City of San Diego

CONTRACTOR'S NAME:_____
ADDRESS:_____
TELEPHONE NO.:_____ **FAX NO.:**_____
CITY CONTACT:JEFF MANCHESTER, 600 B ST. STE 800, MS 908A, SAN DIEGO, CA 92101-4520
jmanchester@sandiego.gov, PHONE NO.: 619-533-4661, FAX NO.: 619-533-5176
NB/LS/CA

CONTRACT DOCUMENTS

FOR

TED WILLIAMS PARKWAY PEDESTRIAN OVERCROSSING AT SHOAL CREEK DRIVE

VOLUME 1 OF 2

BID NO.:	**K-13-4885-DBB-3**
SAP NO. (WBS/IO/CC):	**S-00941**
CLIENT DEPARTMENT:	**2112**
COUNCIL DISTRICT:	**5**
PROJECT TYPE:	**IC**
FEDERAL AID PROJECT NO.:	**HPLU 5004(168)**

THIS CONTRACT IS SUBJECT TO THE FOLLOWING:

- FEDERAL EQUAL OPPORTUNITY CONTRACTING REQUIREMENTS.
- PREVAILING WAGE RATES: STATE, FEDERAL , or BOTH
- APPRENTICE REQUIREMENTS.
- THIS IS A FHWA FUNDED CONTRACT THROUGH STATE OF CALIFORNIA DEPARTMENT OF TRANSPORTATION.

This special provisions contained herein have been prepared by or under the directionof the following Registered Persons:

STRUCTURES

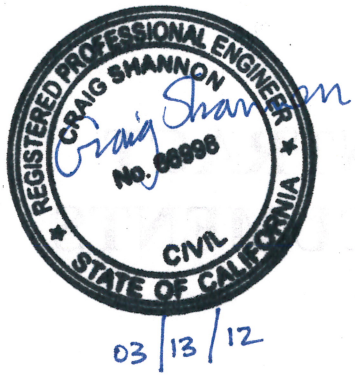

CRAIG SHANNON, P.E.
SENIOR BRIDGE ENGINEER
SIMON WONG ENGINEERING

03/13/12

ABI PALASEYED, P.E.
SENIOR CIVIL ENGINEER
CITY OF SAN DIEGO

((((((((((((((((ATTENTION)))))))))))))))

The 2010 edition of the City of San Diego Standard Specifications for Public Works Construction ("The WHITEBOOK") now contains the following distinct Contract Documents:

1) ***Equal Opportunity Contracting Program Requirements*** - This Contract Document sets forth the standard requirements for the City's equal opportunity contracting program. When additional requirements by the funding source e.g., federal or state agencies are physically included in the contract documents or by reference and there is a discrepancy, the funding source requirements shall govern unless specified otherwise in the Special Provisions.

2) ***City Supplement*** – The City Supplement shall be used in conjunction with the Standard Specifications for Public Works Construction ("The GREENBOOK"), 2009 Edition. The specifications contained in City Supplement take precedence over the specifications contained in The GREENBOOK, 2009 Edition.

   Certain parts of the City Supplement have been highlighted in yellow for the convenience of the users only and shall not affect the interpretation of the Contract.

To obtain The GREENBOOK contact the publisher at: http://www.bnibooks.com

The WHITEBOOK is available only in electronic format under Engineering Documents and References at: http://www.sandiego.gov/engineering-cip/

TABLE OF CONTENTS

DESCRIPTION **PAGE NUMBER**

1. REQUIRED DOCUMENTS SCHEDULE....6 - 8
2. SPECIAL NOTICE DBE....9 - 10
3. INVITATION TO BID(S)....11 - 13
4. INSTRUCTION TO BIDDER(S)....14 - 22
5. FUNDING AGENCY PROVISIONS
    1. Notice of Requirement for Affirmative Action to Ensure Equal Employment Opportunity (Executive Order 11246)....23
    2. Nondiscrimination Provisions for Federally Assisted Construction Contracts....24
    3. Equal Opportunity Clauses....25
    4. Standard Federal Equal Employment Specifications....25 - 27
    5. Violation or Breach of Requirements....28
    6. Monthly Employment Utilization Reports....28
    7. Records of Payments to DBE....28
    8. Federal Wage Requirements for Federally Funded Projects....28 - 29
    9. State Requirements for Contracts Subject To State Prevailing Wage Requirements....29
    10. Wage Rates....30 - 59
    11. Agency Specific Provisions....60
    12. Good Faith Effort Documentation Submittals....61
    13. ATTACHMENTS
        1. Attachment A Local Agency Bidder DBE Information (Construction)....62 - 63
        2. Attachment B Final Report – Utilization of DBE, First Tier Subcontractors....64 - 65
        3. Attachment C Monthly DBE Trucking Verification....66 - 67
        4. Attachment D Local Agency Bidder UDBE Commitment (Construction)....68 - 69
        5. Attachment E Subcontracting Request....70 - 71
        6. Attachment F UDBE Information-Good Faith Efforts....72 - 74
        7. Attachment G DBE Certification Status Change....75 - 76
        8. Attachment H FHWA PR-1391....77 - 79
6. CONTRACT FORMS
    1. Agreement/Contract....80 - 81
    2. Performance Bond and Labor and Materialmen's Bond....82 - 83
    3. Certificate of Insurance – Workers' Comp.....84 - 85
    4. Insurance Endorsement – Workers' Comp.....86
    5. Certificate of Insurance - Liability....87 - 89
    6. Insurance Endorsement - Liability....90 - 91
7. CONTRACTOR CERTIFICATION
    1. Drug-Free Workplace....92
    2. American with Disabilities Act (ADA) Compliance....93
    3. Contractor Standards - Pledge of Compliance....94
    4. Affidavit of Disposal....95
    5. Materials and Workmanship Compliance....96
    6. Notice of Materials to Be Used....97

TABLE OF CONTENTS

DESCRIPTION **PAGE NUMBER**

8. SUPPLEMENTARY SPECIAL PROVISIONS ..... 98 - 116
9. CALTRANS STANDARD SPECIFICATIONS (1-12) ..... 117 - 138
10. CALTRANS STANDARD SPECIFICATIONS (13-95) ..... 139 - 451
11. APPENDICES:
    - APPENDIX A Environmental Report(s)/Exemptions/MMRP ..... 452 - 457
    - APPENDIX B Fire Hydrant Meter Program ..... 458 - 472
    - APPENDIX C Hydrostatic Discharge Form ..... 473 - 474
    - APPENDIX D Sample City Invoice ..... 475 - 476
    - APPENDIX E Preform Loop Construction ..... 477 - 478
    - APPENDIX F SDG&E Relocation Drawings ..... 479 - 480
    - APPENDIX G Materials Typically Accepted by Certifcate of Compliance ..... 481 - 482
    - APPENDIX H Standard Plans List ..... 483 - 485
    - APPENDIX I Location Map ..... 486 - 487
    - APPENDIX J Foundation Report ..... 488 - 565
    - APPENDIX K Certifcate for Permanent Water Quality Improvements ..... 566 - 569
    - APPENDIX L Storm Water Requriements Applicability Checklist ..... 570 - 572
    - APPENDIX M Transportation Management Plan ..... 573 - 577
    - APPENDIX N Natural Environment Study ..... 578 - 598
    - APPENDIX O Work Permit for Private Property ..... 599 - 601

REQUIRED DOCUMENTS SCHEDULE

This table is intended to serve as a convenient tool for listing forms and documents required at different times. It is neither exhaustive nor must be considered a Contract Document by itself. Therefore, the users must review the entire Contract Documents and become familiar with the required documentation and the submittal schedule associated with each document.

Bidder's attention is directed to the City's Municipal Code §22.0807(e),(3)-(5) for important information regarding required documentation.

The specified EOC forms are all available for download from the EOC Program's web site at:

http://www.sandiego.gov/eoc/forms/index.shtml

ITEM	WHEN	BY	WHAT
1.	BID DUE DATE/TIME	ALL BIDDERS	Proposal (Bid)
2.	BID DUE DATE/TIME	ALL BIDDERS	Bid Bond
3.	BID DUE DATE/TIME	ALL BIDDERS	Non-collusion Affidavit to be Executed By Bidder and Submitted with Bid under 23 USC 112 and PCC 7106
4.	BID DUE DATE/TIME	ALL BIDDERS	Contractors Certification of Pending Actions
5.	BID DUE DATE/TIME	ALL BIDDERS	Equal Benefits Ordinance Certification of Compliance
6.	BID DUE DATE/TIME	ALL BIDDERS	Debarment & Suspension Certificate Title 49, Code of Federal Regulations, Part 29
7.	BID DUE DATE/TIME	ALL BIDDERS	Equal Employment Opportunity Certification
8.	BID DUE DATE/TIME	ALL BIDDERS	Public Contract Code Section 10162 Questionnaire
9.	BID DUE DATE/TIME	ALL BIDDERS	Non-Lobbying Certification
10.	BID DUE DATE/TIME	ALL BIDDERS	Lobby Prohibition, Certification and Disclosure
11.	BID DUE DATE/TIME	ALL BIDDERS	Instructions for Completion of SF-LLL, Disclosure of Lobbying Activities
12.	BID DUE DATE/TIME	ALL BIDDERS	Disclosure of Lobbying Activities
13.	BID DUE DATE/TIME	ALL BIDDERS	Form AA35 - List of Subcontractors
14.	BID DUE DATE/TIME	ALL BIDDERS	Form AA40 - Named Equipment/Material Supplier List
15.	WITHIN 4 WORKING DAY OF BID OPENING	ALL BIDDERS	Proof of Valid DBE-MBE-WBE-DVBE Certification Status e.g., Certs.

REQUIRED DOCUMENTS SCHEDULE

ITEM	WHEN	BY	WHAT
16.	WITHIN 4 WORKINGS DAY OF BID OPENING	ALL BIDDERS	Federal Good Faith Documentations
17.	WITHIN 4 WORKINGS DAY OF BID OPENING	ALL BIDDERS	Caltrans Exhibit 15 G-1 Local Agency Bidder UDBE Commitment (Attachment D)
18.	WITHIN 4 WORKINGS DAY OF BID OPENING	ALL BIDDERS	Caltrans Exhibit 15 G-2 Local Agency Bidder DBE Information (Attachment A)
19.	WITHIN 4 WORKINGS DAY OF BID OPENING	ALL BIDDERS	Exhibit 15-H UDBE Information – Good Faith Efforts (Attachment F)
20.	WITHIN 10 WORKING DAYS OF BID OPENING	APPARENT LOW BIDDER	Names of the principle individual owners of the Apparent Low Bidder - In the event the firm is employee owned or publicly held, then the fact should be stated and the names of the firm's principals and officers shall be provided.
21.	WITHIN 10 WORKING DAYS OF BID OPENING	APPARENT LOW BIDDER	Form BB05 - Work Force Report
22.	WITHIN 10 WORKING DAYS OF BID OPENING	APPARENT LOW BIDDER	If the Contractor is a Joint Venture, the following information must be submitted: o Joint Venture Agreement o Joint Venture License
23.	WITHIN 10 WORKING DAYS AFTER RECEIPT BY BIDDER OF CONTRACT FORMS	APPARENT LOW BIDDER	Contract Forms - Agreement
24.	WITHIN 10 WORKING DAYS AFTER RECEIPT BY BIDDER OF CONTRACT FORMS	APPARENT LOW BIDDER	Contract Forms - Payment and Performance Bond
25.	WITHIN 10 WORKING DAYS AFTER RECEIPT BY BIDDER OF CONTRACT FORMS	APPARENT LOW BIDDER	Certificates of Insurance and Endorsements
26.	WITHIN 10 WORKING DAYS AFTER RECEIPT BY BIDDER OF CONTRACT FORMS	APPARENT LOW BIDDER	Contractor Certification - Drug-Free Workplace
27.	WITHIN 10 WORKING DAYS AFTER RECEIPT BY BIDDER OF CONTRACT FORMS	APPARENT LOW BIDDER	Contractor Certification - American with Disabilities Act
28.	WITHIN 10 WORKING DAYS AFTER RECEIPT BY BIDDER OF CONTRACT FORMS	APPARENT LOW BIDDER	Contractors Standards - Pledge of Compliance
29.	BY 5th OF EACH MONTH	CONTRACTOR	CC20 - Monthly Employment Report
30.	BY 5th OF EACH MONTH	CONTRACTOR	CC25 - Monthly Invoicing Report

REQUIRED DOCUMENTS SCHEDULE

ITEM	WHEN	BY	WHAT
31.	BY 5th OF EACH MONTH	CONTRACTOR	Monthly DBE/UDBE Truck Verification (Attachment C)
32.	BY JULY 1st	CONTRACTOR	Form FHWA PR-1391 – Attachment H
33.	PRIOR TO ACCEPTANCE	CONTRACTOR	Form CC10 - Contract Change Order (CCO)
34.	PRIOR TO ACCEPTANCE	CONTRACTOR	Form CC15 - Final Summary Report
35.	PRIOR TO ACCEPTANCE	CONTRACTOR	Affidavit of Disposal
36.	PRIOR TO ACCEPTANCE	CONTRACTOR	Final Report – Utilization of Disadvantaged Business Enterprises (DBE) First – Tier Subcontractors (Attachment B)

SPECIAL NOTICE
DISADVANTAGED BUSINESS ENTERPRISES (DBE)

1. INTRODUCTION. The City affirms that in any contract entered into pursuant to this advertisement, DBE will be afforded full opportunity to submit Bids in response to this invitation.

1.1. This Federally assisted project includes subcontracting participation percentages for DBE participation. DBE goal commitments and Good Faith Efforts (GFE) shall be made prior to bidding. DBE commitments and GFE made after the Bid opening will not be considered for the Award of Contract.

1.2. The Bidder's attention is directed to the following:

i. City of San Diego's General Equal Opportunity Contracting Program incorporated in the "WHITEBOOK" which applies to all construction contracts except as amended in these specifications and specified in the "FUNDING AGENCY PROVISIONS" incorporated in the Contract Documents.

ii. Required Documents Schedule for submittals.

2. AMENDMENTS TO THE CITY'S STANDARD EOCP REQUIREMENTS.

III. Equal Employment Opportunity Outreach Program (A). DELETE in its entirety and SUBSTITUTE with the following:

1. Competitive Bids. If a contract is competitively solicited, the Apparent Low Bidder shall submit a *Work Force Report (Form BB05)* or an Equal Employment Opportunity (EEO) Plan, within 10 Working Days after receipt by the Bidder of Contract forms to the City for approval as specified in the Notice of Intent to Award letter from the City.

IX. Definitions. ADD the following for the purpose of these specifications:

Disadvantaged Business Enterprises (DBEs) are:

A. Entities owned and/or controlled by a socially and economically disadvantaged individuals as described by Title X of the Clean Air Act Amendments of 1990 (42 U.S.C. 7601 note) (10% statute), and Public Law 102-389 (42 U.S.C. 4370d) (8% statute), respectively

B. Historically Underutilized Business (HUB) Zone Small Business Concern (or a concern under a successor program)

C. Small Disadvantaged Business (SDB)

D. Women-Owned Business (WoSB)

E. Service Disabled Veteran-owned Small Business (SDVoSB)

For the purpose of these requirements terms "Bid" and "Proposal," "Bidder" and "Proposer," "Subcontractor" and "Subconsultant," "Contractor" and "Consultant," "Contractor" and "Prime Contractor," "Consultant" and "Professional Service Provider," "Suppliers" and "Vendors," "Suppliers" and Dealers," and "Suppliers" and "Manufacturers" may have been used interchangeably.

ADD:

XIII. Federal Equal Opportunity Requirements. All federally funded projects are subject to the federal equal opportunity regulations and the following requirements. The City reserves the right to audit Contractor's compliance with the federal requirements set forth below.

3. SUBCONTRACTING PARTICIPATION PERCENTAGES. Following are federally subcontracting participation percentages for this contract. For the purpose of achieving the subcontractor participation percentage, the City will not account for the Field Orders, Additive or Deductive, and Allowance Bid Items (when shown by the City as Allowance – Type II in the Bid and Proposal forms) in the calculation. Allowance – Type I Bid Items are part of the Base Bid integral to the SOW.

3.1. California Department of Transportation (Caltrans) - Certified DBE Bidder(s) shall meet the DBE goal or have a good faith effort. They receive no credit toward the goal for their own DBE status. The City has determined that the following goals shall apply to this project:

1. Underutilized DBE (UDBE) Race Conscious	6.6%
2. (DBE) Race Neutral	9.0%
3. Total DBE Percentage	15.6%

The Contractor shall meet the Project specific goals for UDBE's as outlined in the Specifications or satisfy GFE documentation requirements.

4. PRE-BID CONFERENCE. A mandatory Pre-Bid Conference is scheduled for this project as specified in the Invitation to Bids. The purpose of this meeting is to inform prospective Bidder(s) of the submittal requirements and provisions relative to the City requirements.

5. MANDATORY CONDITIONS. Bid will be declared **non-responsive** if the Bidder fails any of the following conditions:

5.1. Submission of GFE documentation, as specified in the Special Provisions.

5.2. Attending the Pre-Bid Conference.

5.3. Bidder's submission of GFE documentation demonstrating the Bidder made a good faith effort to outreach to and include DBE Subcontractors shall be submitted within **4 Working Days** of the Bid opening.

CITY OF SAN DIEGO, CALIFORNIA

INVITATION TO BIDS

1. **RECEIPT AND OPENING OF BIDS:** Bid(s) will be received at the Public Works Contracting Group at **1200 THIRD AVENUE, SUITE 200, SAN DIEGO, CA 92101 UNTIL 2:00 PM ON AUGUST 8th, 2012** for performing work on the following project (Project):

TED WILLIAMS PARKWAY PEDESTRAIN OVERCROSSING AT SHOAL CREEK DRIVE

2. **DESCRIPTION OF WORK:** The Work involves furnishing all labor, materials, equipment, services, and other incidental works and appurtenances for the construction of the Project as described below:

Construction of an overcrossing (bridge) at Ted Williams Parkway and Shoal Creek Drive for Pedestrians and bicyclists.

The Work shall be performed in accordance with:

- Bid No. **K-13-4885-DBB-3** and Plans numbered **35490-1-D** through **35490-46-D**, and **35490-T1-D** through **35490-T3-D** inclusive.

The Revised Standard Plans (RSP) and New Standard Plans (NSP) which apply to this contract are included as individual sheets of the Project Plans.

3. **ENGINEER'S ESTIMATE:** The Engineer's estimate of the most probable price for this contract is **$2,558,561.00.**

4. **LOCATION OF WORK:** The location of Work is Citywide unless specified otherwise as follows:

Intersection of Ted Williams Parkway and Shoal Creek Drive

5. **CONTRACT TIME:** The Contract Time for completion of the Work shall be **220 Working Days.**

6. **CONTRACTOR'S LICENSE CLASSIFICATION**: In accordance with the provisions of California Law, the Contractor shall possess valid appropriate license(s) at the time that the Bid is submitted. Failure to possess the specified license(s) shall render the Bid as **non-responsive** and shall act as a bar to award of the Contract to any Bidder not possessing required license at the time of Bid.

The City has determined the following licensing classification for this contract:

- **CLASS "A"**

7. **PRE-BID CONFERENCE:** There will be a Pre-Bid Conference to discuss the scope of the Project, bidding requirements, and Equal Opportunity Contracting Program requirements and reporting procedures in the **Public Works Contracting Group, Conference Room** at **1200 Third Avenue, Suite 200, San Diego, CA 92101** at **10:00 A.M.,** on **JULY 18th, 2012.**

The Pre-Bid Conference has been designated as MANDATORY. All potential bidders are required to attend. Bid will be declared **non-responsive** if the Bidder fails to attend the Pre-Bid Conference when specified to be mandatory. Attendance at the Pre-Bid Conference will be evidenced by the representative's signature on the attendance roster. It shall be the responsibility of the Bidder's representative to complete and sign the attendance roster. No Bidder will be admitted after the official start time of the mandatory Pre-Bid Conference.

To request a copy of the agenda on an alternative format, or to request a sign language or oral interpreter for this meeting, call the Public Works Contracting Group at (619)236-6000 at least 5 Working Days prior to the Pre-Bid Conference to ensure availability.

8. **CITY PROJECT MANAGER CONTACT INFORMATION:**

See the cover of the Contract Documents.

9. **REFERENCE STANDARDS:** Except as otherwise noted or specified, the Work shall be completed in accordance with the following standards:

1. STANDARD SPECIFICATIONS

Document No.	Filed	Description
PITS0504091	05-04-09	Standard Specifications for Public Works Construction (The GREENBOOK), 2009 Edition
PITS090110-1	09-01-10	City of San Diego Standard Specifications for Public Works Construction (The WHITEBOOK), 2010 Update *
AEC1231064	12-31-06	California Department of Transportation, Manual of Uniform Traffic Control Devices (MUTCD 2006)
769023	09-11-84	Standard Federal Equal Employment Opportunity Construction Contract Specifications and the Equal Opportunity Clause

NOTE: The City of San Diego Supplement, 2010 Update now consolidates various City Public Works Construction Standard Specifications which in the past were included in the Supplementary Special Provisions. The Bidders' attention is directed to this edition of the City Supplement for a close review to ensure no important information is missed for the preparation of the Bids.

2. STANDARD DRAWINGS

Document No.	Filed	Description
AEC1230163	12-31-06	City of San Diego Standard Drawings*
N/A	Varies	City Standard Drawings - Updates Approved For Use *
AEC0925061	09-25-06	Caltrans 2006 U.S. Customary Unit Standard Plans

NOTE: *Available online under Engineering Documents and References at: http://www.sandiego.gov/engineering-cip.

10. **WAGE RATES:** Prevailing wages are not applicable to this project unless specified otherwise on the cover page of these specifications and when included in these specifications. See Funding Agency Provisions that follow this Invitation to Bid for more information.

11. **INSURANCE REQUIREMENTS:** Upon receipt of the City's Notice of Intent to Award letter, the Contractor will be asked to submit all certificates of insurance and endorsements to the City.

Refer to sections 7-3, "LIABILITY INSURANCE", and 7-4, "WORKERS' COMPENSATION INSURANCE" of the Supplementary Special Provisions (SSP) for the insurance requirements which must be met.

You must ensure all required insurance certificates and endorsements are submitted accurately and on time. Failure to provide the requisite insurance documents by the date stated in the City's Notice of Intent to Award will result in delay of contract award and may result in annulment of the contract award or other more severe sanctions as provided in the City's Municipal Code §22.0807(e),(3)-(5).

Tony Heinrichs
Director
Public Works Department

INSTRUCTIONS TO BIDDERS

1. **PREQUALIFICATION OF CONTRACTORS:** The contractor(s) who intend to submit Bid or Proposal in response to this invitation to bid must be pre-qualified for total amount proposed, inclusive of all alternate bid items prior to the date of Bid submittal.

   Bids from contractors who have not been pre-qualified as applicable, and Bids that exceed the maximum dollar amount at which contractors are pre-qualified, will be deemed **non-responsive** and ineligible for award. Complete information and prequalification questionnaires are available at:

   http://www.sandiego.gov/engineering-cip/services/consultcontract/prequal.shtml

   The completed questionnaire, financial statement, and bond letter or a copy of the contractor's SLBE-ELBE certification and bond letter, must be submitted no later than 2 weeks prior to the bid opening to the Public Works Department - Engineering & Capital Project, Prequalification Program, 1010 Second Avenue, Suite 1200, San Diego, CA 92101. For additional information or the answer to questions about the prequalification program, please contact David Stucky at 619-533-3474 or dstucky@sandiego.gov.

2. **CONTRACTOR REGISTRATION:** Prospective bidder(s) as well as existing contractors and suppliers are required to register with the City's EOCP. Refer to 2-17, "CONTRACTOR REGISTRATION" for details.

3. **CITY'S RESPONSES AND ADDENDA:** The City at its option, may respond to any or all questions submitted in writing, via letter, or FAX in the form of an addendum. No oral comment shall be of any force or effect with respect to this solicitation. The changes to the Contract Documents through addendum are made effective as though originally issued with the Bid. The Bidders shall acknowledge the receipt of Addenda on the form provided for this purpose in the Bid.

4. **CITY'S RIGHTS RESERVED:** The City reserves the right to cancel the Invitation to Bids at any time, and further reserves the right to reject submitted Bids, without giving any reason for such action, at its sole discretion and without liability. Costs incurred by the Bidder(s) as a result of preparing Bids under the Invitation to Bid shall be the sole responsibility of each bidder. The Invitation to Bid creates or imposes no obligation upon the City to enter a contract.

5. **CONTRACT PRICING FORMAT:** This solicitation is for a Lump Sum contract with Unit Price provisions as set forth in the Bid Proposal Form(s), Volume 2 unless specified otherwise in the Contract Documents.

6. **SUBMITTAL OF "OR EQUAL" ITEMS:** See 4-1.6, "Trade Names or Equals."

7. **AWARD PROCESS:** The Award of this contract is contingent upon the Contractor's compliance with all conditions precedent to Award, including the submittal of acceptable insurance and surety bonds pursuant to San Diego Municipal Code § 22.3007.

   If the responsible Bid does not exceed the City's engineering estimate, the City will, in most cases, prepare contract documents for execution within 3 weeks of the date of the Bid opening and award the Contract within 5 Working Days of receipt of properly executed Contract, bond, and insurance documents.

   This contract is deemed to be awarded, and effective, only upon the signing of the Contract by the Mayor or designee of the City.

8. **SUBCONTRACT LIMITATIONS:** The Bidder's attention is directed to Standard Specifications for Public Works Construction, Section 2-3, "SUBCONTRACTS" which requires the Contractor to perform not less than the amount therein stipulated with its own forces. Failure to comply with these requirements may render the Bid **non-responsive** and ineligible for award.

9. **AVAILABILITY OF PLANS AND SPECIFICATIONS:** Contract Documents may be obtained by visiting the City's website: http://www.sandiego.gov/engineering-cip/services/consultcontract/advertising.shtml. Plans and Specifications for this contract are also available for review in the office of the City Clerk or Public Works Contracting Group.

10. **QUESTIONS:** Questions about the meaning or intent of the Contract Documents as related to the scope of Work and of technical nature shall be directed to the Project Manager prior to Bid opening. Interpretations or clarifications considered necessary by the Project Manager in response to such questions will be issued by Addenda, which will be uploaded to eBidboard (or mailed or delivered to all parties recorded by the City as having received the Contract Documents for Minor Construction contracts).

    The Director (or designee), Public Works Department is the officer responsible for opening, examining, and declaring of competitive Bids submitted to the City for the acquisition, construction and completion of any public improvement except when otherwise set forth in these documents. Questions in these areas of responsibility (e.g., i.e. Pre-qualification, EOCP information, bidding activities, bonds and insurance, etc. as related to this contract shall be addressed to the Contract Administration, Public Works Contracting Group, 1200 Third Avenue, Suite 200, San Diego, California, 92101, Telephone No. (619) 236-6000.

    Questions received less than 14 days prior to the date for opening of Bids may not be answered. Only questions answered by formal written addenda will be binding. Oral and other interpretations or clarifications will be without legal effect. It is the Bidder's responsibility to become informed of any addenda that have been issued and to include all such information in its Bid.

11. **ELIGIBLE BIDDERS:** No person, firm, or corporation shall be allowed to make, file, or be interested in more than 1 Bid for the same work unless alternate Bids are called for. A person, firm or corporation who has submitted a sub-proposal to a Bidder, or who has quoted prices on materials to a Bidder, is not hereby disqualified from submitting a sub-proposal or quoting prices to other Bidders or from submitting a Bid in its own behalf.

12. **SAN DIEGO BUSINESS TAX CERTIFICATE:** All Contractors, including Subcontractors, not already having a City of San Diego Business Tax Certificate for the work contemplated shall secure the appropriate certificate from the City Treasurer, Civic Center Plaza, first floor, before the Contract can be executed.

13. **PROPOSAL FORMS:** Bid shall be made only upon the Bidding Documents i.e., Proposal form attached to and forming a part of the specifications. The signature of each person signing shall be in longhand.

    The entire specifications for the bid package do not need to be submitted with the bid. Bidder shall complete and submit, only, all pages in the "Bidding Document" Section (see Volume 2) as their Bid per the schedule given under "Required Documents Schedule," (see Volume 1). Bidder is requested to retain for their reference other portions of the Contract Documents that are not required to be submitted with the Bid.

The City may require any Bidder to furnish a statement of experience, financial responsibility, technical ability, equipment, and references.

Bids and certain other specified forms and documents shall be enclosed in a sealed envelope and shall bear the title of the work and name of the Bidder and the appropriate State Contractors License designation which the Bidder holds.

Bids may be withdrawn by the Bidder prior to, but not after, the time fixed for opening of Bids.

14. BIDDERS' GUARANTEE OF GOOD FAITH (BID SECURITY):

With the exception of the contracts valued $5,000 or less, GRC and Design-Build contracts, and contracts subject to the Small and Local Business Program of $250,000 or less e.g., ELBE contracts, each Bidder shall accompany its Bid with either a cashier's check upon some responsible bank, or a check upon such bank properly certified or an approved corporate surety bond payable to the City of San Diego, for an amount of not less than 10% of the aggregate sum of the Bid, which check or bond, and the monies represented thereby shall be held by the City as a guarantee that the Bidder, if awarded the contract, will in good faith enter into such contract and furnish the required final bonds.

The Bidder agrees that in case of Bidder's refusal or failure to execute this contract and give required final bonds, the money represented by a cashier's or certified check shall remain the property of the City, and if the Bidder shall fail to execute this contract, the Surety agrees that it will pay to the City damages which the City may suffer by reason of such failure, not exceeding the sum of 10% of the amount of the Bid.

A Bid received without the specified bid security will be rejected as being **non-responsive**.

15. AWARD OF CONTRACT OR REJECTION OF BIDS:

This contract may be awarded to the lowest responsible and reliable Bidder (for Design-Build contracts refer to the RFP for the selection and award information). Bidders shall complete the entire Bid schedule (e.g., schedule of prices). Incomplete price schedules will be rejected as being **non-responsive**.

The City reserves the right to reject any or all Bids, and to waive any informality or technicality in Bids received and any requirements of these specifications as to bidding procedure.

Bidders will not be released on account of their errors of judgment. Bidders may be released only upon receipt by the City from the Bidder within 3 Working Days, excluding Saturdays, Sundays, and state holidays, after the opening of Bids, of written notice which includes proof of honest, credible, clerical error of material nature, free from fraud or fraudulent intent, and of evidence that reasonable care was observed in the preparation of the Bid.

A non-selected Bidder may protest award of the Contract to the selected Bidder by submitting a written "Notice of Intent to Protest" including supporting documentation which shall be received by Public Works Contracting Group no later than 10 days after the City's announcement of the selected Bidder or no later than 10 days from the date that the City issues notice of designation of a Bidder as non-responsible in accordance with San Diego Municipal Code Chapter 2, § 22.3029, "Protests of Contract Award."

The City of San Diego will not discriminate with regard to race, religious creed, color, national origin, ancestry, physical handicap, marital status, sex or age, in the award of contracts.

Each Bid package properly executed as required by these specifications shall constitute a firm offer, which may be accepted by the City within the time specified in the Invitation to Bids.

The City reserves the right to evaluate all Bids and determine the lowest Bidder (or winner for Design-Build contracts) on the basis of any proposed alternates, additive items or options, at its discretion.

16. BID RESULTS: The Bid opening by the City shall constitute the public announcement of the Apparent Low Bidder (or Apparent Winner in case of Design-Build contracts). In the event that the Apparent Low Bidder (or Apparent Winner in case of Design-Build contracts) is subsequently deemed non-responsive or non-responsible, a public announcement will be posted in the City's web page, with the name of the newly designated Apparent Low Bidder (or Apparent Winner in case of Design-Build contracts).

To obtain Bid results, either attend Bid opening, review the results on the City's web site, or provide a self-addressed, stamped envelope, referencing Bid number, and Bid tabulation will be mailed to you upon verification of extensions. Due to time constraints, Bid results cannot be given out over the telephone.

17. THE CONTRACT: The Bidder to whom award is made shall execute a written contract with the City of San Diego and furnish good and approved bonds and insurance certificates specified by the City within 10 Working Days after receipt by Bidder of a form of contract for execution unless an extension of time is granted to the Bidder in writing.

If the Bidder takes longer than 10 Working Days to fulfill these requirements, then the additional time taken shall be added to the Bid guarantee. The Contract shall be made in the form adopted by the City, which includes the provision that no claim or suit whatsoever shall be made or brought by Contractor against any officer, agent, or employee of the City for or on account of anything done or omitted to be done in connection with this contract, nor shall any such officer, agent, or employee be liable hereunder.

If the Bidder to whom the award is made fails to enter into the contract as herein provided, the award may be annulled and the Bidder's Guarantee of Good Faith will be subject to forfeiture. An award may be made to the next lowest responsible and reliable Bidder who shall fulfill every stipulation embraced herein as if it were the party to whom the first award was made.

For contracts that are not Design-Build, pursuant to the San Diego City Charter section 94, the City may only award a public works contract to the lowest responsible and reliable Bidder. The City will require the Apparent Low Bidder to (i) submit information to determine the Bidder's responsibility and reliability, (ii) execute the Contract in form provided by the City, and (iii) furnish good and approved bonds and insurance certificates specified by the City within 10 Working Days, unless otherwise approved by the City, in writing after the Bidder receives notification from the City, designating the Bidder as the Apparent Low Bidder and formally requesting the above mentioned items.

The award of the Contract is contingent upon the satisfactory completion of the above mentioned items and becomes effective upon the signing of the Contract by the Mayor or designee. If the Apparent Low Bidder does not execute the Contract or submit required documents and information, the City may award the Contract to the next lowest responsible and reliable Bidder who shall fulfill every condition precedent to award. A corporation designated as the Apparent Low Bidder shall furnish evidence of its corporate existence and evidence that the officer signing the Contract and bond for the corporation is duly authorized to do so.

18. EXAMINATION OF PLANS, SPECIFICATIONS, AND SITE OF WORK: The Bidder shall examine carefully the Project Site, the Plans and Specifications, other materials as described in the Special Provisions, Section 2-7, and the proposal forms (e.g., Bidding Documents) therefore. The submission of a Bid shall be conclusive evidence that the Bidder has investigated and is satisfied as to the conditions to be encountered, as to the character, quality, and scope of Work, the quantities of materials to be furnished, and as to the requirements of the Bidding Documents Proposal, Plans, and Specifications.

19. DRUG-FREE WORKPLACE:

a) General:

City projects are subject to City of San Diego Resolution No. R-277952 adopted on May 20, 1991. Bidders shall become aware of the provisions of Council Policy 100-17 which was established by Resolution No. R-277952. The policy applies equally to the Contractor and Subcontractors. The elements of the policy are outlined below.

b) Definitions:

"Drug-free workplace" means a site for the performance of work done in connection with a contract let by City of San Diego for the construction, maintenance, or repair of any facility or public work by an entity at which employees of the entity are prohibited from engaging in the unlawful manufacture, distribution, dispensation, possession, or use of a controlled substance in accordance with the requirements of this section.

"Employee" means the employee of a contractor directly engaged in the performance of work pursuant to a contract as described in Section 3, "City Contractor Requirements."

"Controlled substance" means a controlled substance in schedules I through V of Section 202 of the Controlled Substances Act (21 U.S.C. Sec. 812).

"Contractor" means the department, division, or other unit of a person or organization responsible to the contractor for the performance of a portion of the work under the contract.

c) City Contractor Requirements:

Every person or organization awarded a contract or grant by the City of San Diego for the provision of services shall certify to the City that it will provide a drug-free workplace by doing all following:

a. Publishing a statement notifying employees that the unlawful manufacture, distribution, dispensation, possession, or use of a controlled substance is prohibited in the person's organization's workplace and specifying the actions that will be taken against employees for violations of the prohibition.

b. Establishing a drug-free awareness program to inform employees about all of the following:

i. The dangers of drug abuse in the workplace.

ii. The person's or organization's policy of maintaining a drug-free workplace.

iii. Any available drug counseling, rehabilitation, and employee assistance programs.

iv. The penalties that may be imposed upon employees for drug abuse violations.

c. Posting the statement required by subdivision (1) in a prominent place at contractor's main office. For projects large enough to necessitate a construction trailer at the job site, the required signage would also be posted at the Site.

The Contractor shall include in each subcontract agreement language which indicates the Subcontractor's agreement to abide by the provisions of subdivisions a) through c) above. The Contractors and Subcontractors shall be individually responsible for their own drug-free workplace programs.

Note: The requirements of a drug-free awareness program can be satisfied by periodic tailgate sessions covering the various aspects of drug-abuse education. Although an in-house employee assistance program is not required, contractors should be able to provide a listing of drug rehabilitation and counseling programs available in the community at large.

Questions about the City's Drug-free Workplace Policy shall be referred to the Contract Specialist, Public Works Contracting Group.

20. AMERICANS WITH DISABILITIES ACT:

a) General: City projects are subject to City of San Diego Resolution No. R-282153 adopted on June 14, 1993. The Bidders shall become aware of the provisions of Council Policy 100-04 which was established by Resolution No. R-282153. The policy applies equally to the Contractor and all Subcontractors. The elements of the policy are outlined below.

b) Definitions:

"Qualified individual with a disability" means an individual with a disability who satisfies the requisite skill, experience, education and other job-related requirements of the employment position such individual holds or desires, and who, with or without reasonable accommodation, can perform the essential functions of such position.

"Employee" means the employee of the Contractor directly engaged in the performance of Work.

c) The City Requirements: Every person or organization entering into a contractual agreement with or receiving a grant from the City of San Diego shall certify to the City of San Diego that it will comply with the ADA by adhering to all of the provisions of the ADA listed below.

i. The Contractor shall not discriminate against qualified persons with disabilities in any aspects of employment, including recruitment, hiring, promotions, conditions and privileges of employment, training, compensation, benefits, discipline, layoffs, and termination of employment.

ii. No qualified individual with a disability may be excluded on the basis of disability, from participation in, or be denied the benefits of services, programs, or activities by the Contractor or Subcontractors providing services for the City.

iii. The Contractor shall post a statement addressing the requirements of the ADA in a prominent place at the worksite. The Contractor shall include in each subcontract agreement, language which indicates the Subcontractor's agreement to abide by the provisions of subdivisions (a) through (c) inclusive of Section 3. The Contractor and Subcontractors shall be individually responsible for their own ADA employment programs. Questions about the City's ADA Policy should be referred to the Contract Administrator.

21. CONTRACTOR STANDARDS – PLEDGE OF COMPLIANCE: This contract is subject to City of San Diego Municipal Code §22.3224 as amended 11/24/08 by ordinance O-19808. Bidders shall become aware that the requirements apply to Contractors and Subcontractors for contracts greater than $50,000 in value.

Upon award, amendment, renewal, or extension of this contract, the Contractors shall complete a Pledge of Compliance attesting under penalty of perjury that they complied with the requirements of this section.

The Contractors shall ensure that their Subcontractors whose subcontracts are greater than $50,000 in value complete a Pledge of Compliance attesting under penalty of perjury that they complied with the requirements of this section. Subcontractors may access the Pledge of Compliance at:

http://www.sandiego.gov/purchasing/pdf/contractor_standards_questionnaire.pdf.

The Contractors shall include in each subcontract agreement, language which requires Subcontractors to abide by the provisions of City of San Diego Municipal Code §22.3224. A sample provision is as follows:

"**Compliance with San Diego Municipal Code §22.3224**: Subcontractor acknowledges that it is familiar with the requirements of San Diego Municipal Code §22.3224 ("Contractor Standards"), and agrees to comply with requirements of that section. The Subcontractor further agrees to complete the Pledge of Compliance, incorporated herein by reference."

22. **NOTICE OF LABOR COMPLIANCE PROGRAM APPROVAL:** The City of San Diego received initial approval as a Labor Compliance Program on August 11, 2003. The Labor Compliance Program Manual is available at:

http://www.sandiego.gov/eoc/laborcompliance/#manual.

The limited exemption from prevailing wages pursuant to Labor Code §1771.5(a) does not apply to contracts under jurisdiction of the Labor Compliance Program. Inquiries, questions, or assistance about the Labor Compliance Program should be directed to: Equal Opportunity Contracting Program, 1200 Third Ave., Suite 200 MS56P, San Diego, CA 92101, Tel. 619-236-6000.

23. **PAYROLL RECORDS:** The Contractor's attention is directed to the City of San Diego Labor Compliance Program, Section IV, pages 4-7, and the State of California Labor Code §§ 1771.5(b) and 1776 (Stats. 1978, Ch. 1249). These require, in part, that the Contractor and Subcontractors maintain and furnish to the City, at a designated time, a certified copy of each weekly payroll containing a statement of compliance signed under penalty of perjury.

The Contractor and Subcontractors shall submit weekly certified payrolls online via Prism® i.e., the City's web-based labor compliance program. Instructions on how to use the system will be provided to the Contractor after the award.

The Contractor shall be responsible for the compliance with these provisions by Subcontractors. The City shall withhold contract payments when payroll records are delinquent or inadequate, or when it is established after investigation that underpayment has occurred.

24. **APPRENTICES ON PUBLIC WORKS:** The Contractor shall abide by the requirements of §§1777.5, 1777.6, and 1777.7 of the State of California Labor Code concerning the employment of apprentices by contractors and subcontractors performing public works contracts.

25. **EQUAL BENEFITS:** This Contract Is Subject To The City's Equal Benefits Ordinance (EBO), Chapter 2, Article 2, Division 43 Of The San Diego Municipal Code (SDMC).

In accordance with the EBO, Bidders shall certify they will provide and maintain equal benefits as defined in SDMC §22.4302 for the duration of the Contract (SDMC §22.4304(f)). Failure to maintain equal benefits is a material breach of the Contract (SDMC §22.4304(e)). The Contractor shall notify employees of their equal benefits policy at the time of hire and during open enrollment periods and shall post a copy of the following statement in an area frequented by employees:

> "During the performance of a contract with the City of San Diego, this employer will provide equal benefits to its employees with spouses and its employees with domestic partners."

The Contractor shall give the City access to documents and records sufficient for the City to verify the contractors are providing equal benefits and otherwise complying with EBO requirements.

Full text of the EBO and the Rules Implementing the Equal Benefits Ordinance are posted on the City's website at www.sandiego.gov/purchasing/ or can be requested from the Equal Benefits Program at (619) 533-3948.

26. LIMITED COMPETITION: Contracts designated with a Bid number beginning with "L" may only be bid by the Contractors on the approved SLBE-ELBE Construction Contractors List. For information regarding the SLBE-ELBE Construction Program and registration go to the City's web site: http://www.sandiego.gov.

27. PRE-AWARD ACTIVITIES:

Pre-award Submittals - The Apparent Low Bidder (or winner in case of Design-Build contracts) shall provide the information required within the time specified in "Required Documents," of this bid package. Failure to provide the information within the time specified may result in the Bid being rejected as **non-responsive**.

If the Bid is rejected as non-responsive, the Apparent Low Bidder (or winner in case of Design-Build contracts) shall forfeit the Bid Security required under Invitation to Bids, of this bid package. The decision that the Apparent Low Bidder (or winner in case of Design-Build contracts) is non-responsive for failure to provide the information required within the time specified shall be at the sole discretion of the City.

FUNDING AGENCY PROVISIONS

IN THE EVENT THAT THESE REQUIREMENTS CONFLICT WITH THE CITY'S GENERAL EOC REQUIREMENTS, THE FUNDING AGENCY'S REQUIREMENTS WILL CONTROL.

1. NOTICE OF REQUIREMENT FOR AFFIRMATIVE ACTION TO ENSURE EQUAL EMPLOYMENT OPPORTUNITY (EXECUTIVE ORDER 11246).

1.1. The goal and timetables for minority and female participation, expressed in percentage terms for the Contractor's aggregate workforce in each trade on all construction work in the covered area, as follows:

		Goal
1.	Minority Participation:	16.9%
2.	Female Participation:	6.9%

1.2. These goals are applicable to all the Contractor's construction work (whether or not it is Federal or federally assisted) performed in the covered area. If the Contractor performs Work in a geographical area located outside of the covered area, it shall apply the goals established for such geographical area where the Work is actually performed. With regard to this second area, the Contractor also is subject to the goals for both federally involved and non-federally involved Work.

1.3. The Contractor's compliance with the Executive Order and the regulations in 41 CFR Part 60-4 shall be based on its implementation of the Equal Opportunity Clause, specific affirmative action obligations required by the specifications set forth in 41 CFR 60-4.3(a), and its efforts to meet the goals.

1.4. The hours of minority and female employment and training shall be substantially uniform throughout the length of the Contract, and in each trade, and the Contractor shall make a good faith effort to employ minorities and women evenly on each of its projects. The transfer of minority or female employees or trainees from Contractor to Contractor or from project to project for the sole purpose of meeting the Contractor's goals shall be a violation of the Contract, the Executive Order, and the regulations in 41 CFR Part 60-4. Compliance with the goals will be measured against the total work hours performed.

1.5. The Contractor shall provide written notification to the Director the Office of Federal Contract Compliance Programs within 10 Working Days of award of any Subcontract in excess of $10,000 at any tier for Work under the Contract resulting from this solicitation. The notification shall list the name, address and telephone number of the Subcontractor; employer identification number of the Subcontractor; estimated dollar amount of the Subcontract; estimated starting and completion dates of the Subcontract; and the geographical area in which the subcontract is to be performed. The "covered area" is the City of San Diego.

2. NONDISCRIMINATION PROVISIONS FOR FEDERALLY ASSISTED CONSTRUCTION CONTRACTS AND PROJECTS:

2.1. During the performance of this contract, the Contractor agrees as follows:

1. The Contractor will not discriminate against any employee or applicant for employment because of race, color, religion, sex, or national origin. The Contractor will take affirmative action to ensure that applicants are employed, and that employees are treated during employment without regard to their race, color, religion, sex, or national origin. Such action shall include, but shall not be limited to, the following: employment, upgrading, demotion, or transfer; recruitment or recruitment advertising; layoff or termination; rates of pay or other forms of compensation; and selection for training, including apprenticeship. The Contractor agrees to post in conspicuous places, available to employees and applicants for employment, notices to be provided setting forth the provisions of this nondiscrimination clause.

2. The Contractor will, in all solicitations or advertisements for employees placed by, on behalf of, the Contractor, state that all qualified applicants will receive consideration for employment without regard to race, color, religion, sex, or national origin.

3. The Contractor will send to each labor union or representative of worker with which he has a collective bargaining agreement or other contract or understanding, a notice to be provided advertising the said labor union or workers' representatives of the Contractor's commitments under this section and shall post copies of the notice in conspicuous places available to employees and applicants for employment.

4. The Contractor will comply with all provisions of Executive Order 11246 of September 24, 1965, or of the rules, regulations and relevant orders of the Secretary of Labor.

5. The Contractor will furnish all information and reports required by Executive Order 11246 of September 24, 1965, and by rules, regulations, and orders of the Secretary of Labor, or pursuant thereto, and will permit access to his books, records, and accounts by the administering agency and the Secretary of Labor for purposes of investigation to ascertain compliance with such rules, regulations and orders.

6. In the event of the Contractor's noncompliance with the nondiscrimination clauses of this contract or with any of the said rules, regulations, or orders, this contract may be canceled, terminated, or suspended, in whole or in part, and the Contractor may be declared ineligible for further government contracts or federally assisted construction contracts in accordance with procedures authorized in Executive Order 11246 of September 24, 1965, and such other sanctions may be imposed and remedies invoked as provided in Executive Order 11246 of September 24, 1965, or by rule, regulation, or order of the Secretary of Labor, or as otherwise provided by law.

7. The Contractor will include the portion of the sentence immediately preceding Paragraph 1 and the provisions of Paragraphs 1 through 7 in every subcontract or purchase order unless exempted by rules, regulations, or orders of the Secretary of Labor issued pursuant to Section 204 of Executive Order 11246 of September 24, 1965, so that such provisions will be binding upon each Subcontractor or Vendor. The Contractor will take such action with respect to any subcontract or purchase order as the administering agency may direct as a means of enforcing such provisions, including sanctions for noncompliance: Provided, however, that in the event a Contractor becomes involved in, or is threatened with, litigation with a Subcontractor or Vendor as a result of such direction by the administering agency, the Contractor may request the United States to enter into such litigation to protect the interests of the United States.

3. EQUAL OPPORTUNITY CLAUSES:

3.1. The following equal opportunity clauses are incorporated by reference herein:

1. The equal opportunity clause located 41 CFR 60.1.4(a), which specifies the obligations imposed under Executive Order 11246.
2. The equal opportunity clause located at 41 CFR 60-741.5, which contains the obligations imposed by Section 503 of the Rehabilitation Act of 1973.
3. The "Equal Opportunity Clause" (Resolution No. 765092) filed on December 4, 1978, in the Office of the City Clerk, San Diego, California and incorporated in the "Standard Federal Employment Opportunity Construction Contract Specifications (Executive Order 11246 - Document No. 769023, filed September 11, 1984, in the Office of the City Clerk, San Diego, California) is applicable to all non-exempt City construction contracts and subcontracts of $2,000 or more.
4. Age Discrimination Act of 1975, Pub. L. 94-135.
5. Title VI of the Civil Rights Act of 1964, Pub. L. 88-352.
6. Section 13 of the Federal Water Pollution Control Acts Amendments of 1972, Pub. L. 92-5200 (the Clean Water Act).
7. Section 504 of the Rehabilitation Act of 1973, Pub. L. 93-112 (Executive Orders 11914 and 11250).
8. Women's Minority Business Enterprises, Executive Orders 11625, 12138 and 12432.
9. Section 129 of the Small Business Administration Reauthorization and Amendment Act of 1988, Pub. L. 100-590.

4. STANDARD FEDERAL EQUAL EMPLOYMENT SPECIFICATIONS:

4.1. The Contractor is required to comply with the 16 "Standard Federal Equal Employment Specifications" located at 41 CFR 60-4.3 for federal and federally-assisted construction contracts in excess of $10,000, set forth below.

4.2. The Contractor shall take specific affirmative actions to ensure equal employment opportunity. The evaluation of Contractor's compliance with these specifications shall be based upon its effort to achieve maximum results from its actions The Contractor shall document these efforts fully, and shall implement affirmative actions steps at least as extensive as the following:

1. Ensure and maintain a working environment free of harassment, intimidation, and coercion at all sites, and in all facilities at which the Contractor's employees are assigned to work. The Contractor, where possible, will assign 2 or more women to each construction project. The Contractor shall specifically ensure that all foremen, superintendents, and other on-site supervisory personnel are aware of and carry out the Contractor's obligation to maintain such a working environment, with specific attention to minority or female individuals working at such sites or in such facilities.

2. Establish and maintain a current list of minority and female recruitment sources, provide written notification to minority and female recruitment sources and to community organizations when the Contractor or its unions have employment opportunities available, and maintain a record of the organizations' responses.

3. Maintain a current file of the names, addresses and telephone numbers of each minority and female walk-in applicant and minority or female referral from a union, a recruitment source or community organization and of what action was taken with respect to each such individual. If such individual was sent to the union hiring hall for referral and was not referred back to the Contractor by the union or, if referred, not employed by the Contractor, this shall be documented in the file with the reason therefor, along with whatever additional actions the Contractor may have taken.

4. Provide immediate written notification to the Director when the union or unions with which the Contractor has a collective bargaining agreement has not referred to the Contractor a minority person or woman sent by the Contractor, or when the Contractor has other information that the union referral process has impeded the Contractor's efforts to meet its obligations.

5. Develop on-the-job training opportunities and/or participate in training programs for the area which expressly include minorities and women, including upgrading programs and apprenticeship and trainee programs relevant to the Contractor's employment needs, especially those programs funded or approved by the Department of Labor. The Contractor shall provide notice of these programs to the sources compiled under 2 above.

6. Disseminate the Contractor's EEO policy by providing notice of the policy to unions and training programs and requesting their cooperation in assisting the Contractor in meeting its EEO obligations; by including it in any policy manual and collective bargaining agreements; by publicizing it in the company newspaper, annual report, etc.; by specific review of the policy with all management personnel and with all minority and female employees at least once a year; and by posting the company EEO policy on bulletin boards accessible to all employees at each location where construction work is performed.

7. Review, at least annually, the company's EEO policy and affirmative action obligations under these specifications with all employees having any responsibility for hiring, assignments, layoff, termination or other employment decisions including specific review of these items with onsite supervisory personnel such as superintendents, foreman, etc., prior to the initiation of Work at any job site. A written record shall be made and maintained identifying the time and place of these meetings, persons attending, subject matter discussed, and dispositions of the subject matter.

8. Disseminate the Contractor's EEO policy externally by including it in any advertising in the news media, specifically including minority and female news media, and providing written notification to and discussing the Contractor's EEO policy with other Contractors and Subcontractors with whom the Contractor does or anticipates doing business.

9. Direct its recruitment efforts, both oral and written, to minority, female and community organizations, to schools with minority and female students and to minority and female recruitment and training organizations serving the Contractor's recruitment area and employment needs. Not later than one month prior to the date for the acceptance of applications for apprenticeship or other training by any recruitment source, the Contractor shall send written notification to organizations such as the above, describing the openings, screening procedures, and tests to be used in the selection process.

10. Encourage present minority and female employees to recruit other minority persons and women and where reasonable, provide after school, summer and vacation employment to minority and female youth both on the site and in other areas of a Contractor's work force.

11. Validate all tests and other selection requirements where there is an obligation to do so under 41 CFR Part 60-3.

12. Conduct, at least annually, an inventory and evaluation at least of all minority and female personnel for promotional opportunities and encourage these employees to seek or to prepare for, through appropriate training, etc., such opportunities.

13. Ensure that seniority practices, job classifications, work assignments and other personnel practices do not have a discriminatory effect by continually monitoring all personnel and employment related activities to ensure that the EEO policy and the Contractor's obligations under these specifications are being carried out.

14. Ensure that all facilities and company activities are non-segregated except that separate or single-user toilet and necessary changing facilities shall be provided to assure privacy between the sexes.

15. Document and maintain a record of all solicitations of offers for subcontracts from minority and female construction contractors and suppliers, including circulation of solicitations to minority and female contractor associations and other business associations.

16. Conduct a review, at least annually, of all supervisors' adherence to and performance under the Contractor's EEO policies and affirmative action obligations.

5. VIOLATION OR BREACH OF REQUIREMENTS:

5.1. If at any time during the course of the Contract there is a violation of the Affirmative Action or Equal Employment Opportunity requirements by the Contractor, or the Subcontractors, the City will notify the Contractor of the breach. The City may withhold any further progress payments to the Contractor until the City is satisfied that the Contractor and Subcontractors are in full compliance with these requirements.

6. MONTHLY EMPLOYMENT UTILIZATION REPORTS:

6.1. Refer to GENERAL EQUAL OPPORTUNITY CONTRACTING PROGRAM REQUIREMENTS, CONSTRUCTION CONTRACTOR REQUIREMENTS in The WHITEBOOK and the following:

1. State of California Department of Transportation Payroll Report. Due to the City weekly.
2. Federal and Non-Federal Work in San Diego County. Submit an updated list only if work is complete or new contracts have been awarded during the span of this project.

7. RECORDS OF PAYMENTS TO DBEs:

7.1. The Contractor shall maintain records and documents of payments to DBEs for 3 years following the NOC. These records shall be made available for inspection upon request by any authorized representative of the City, DOT, or both. The reporting requirement shall be extended to any certified DBE Subcontractor.

8. FEDERAL WAGE REQUIREMENTS FOR FEDERALLY FUNDED PROJECTS:

8.1. The successful Bidder's work shall be required to comply with Executive Order 11246, entitled "Equal Employment Opportunity,", as amended by Executive Order 11375, and as supplemented in Department of Labor regulations (41 CFR chapter 60).

8.2. This Executive Order pertains to Equal Employment Opportunity regulations and contains significant changes to the regulations including new goals and timetables for women in construction and revised goals and time-tables for minorities in construction.

8.3. Minimum wage rates for this project have been predetermined by the Secretary of Labor and are set forth in the Decision of the Secretary and bound into the specifications book. Should there be any difference between the state or federal wage rates, including health and welfare funds for any given craft, mechanic, or similar classifications needed to execute the Work, it shall be mandatory upon the Contractor or subcontractor to pay the higher of the two rates.

8.4. The minimum wage rate to be paid by the Contractor and the Subcontractors shall be in accordance with the Federal Labor Standards Provisions (see pages 11 through 35 below) and Federal Wage Rates (see Wage Rates below) and General Prevailing Wage Determination made by the State of California, Director of Industrial Relations pursuant to California Labor Code Part 7, Chapter 1, Article 2, Sections 1770, 1773 and 1773.1, whichever is higher.

8.5. A Contractor having 50 or more employees and its Subcontractors having 50 or more employees and who may be awarded a contract of $50,000 or more will be required to maintain an affirmative action program, the standards for which are contained in the specifications.

8.6. To be eligible for award, each Bidder shall comply with the affirmative action requirements which are contained in the specifications.

8.7. Women will be afforded equal opportunity in all areas of employment. However, the employment of women shall not diminish the standards of requirements for the employment of minorities.

9. STATE REQUIREMENTS FOR CONTRACTS SUBJECT TO STATE PREVAILING WAGE REQUIREMENTS:

9.1. In accordance with the provisions of California Labor Code Sections 1770, et seq. as amended, the Director of the Department of Industrial Relations has determined the general prevailing rate of per diem wages in accordance with the standards set forth in such Sections for the locality in which the Work is to be performed. Copies of the prevailing rate of per diem wages may be found at http://www.dir.ca.gov/dlsr/statistics_research.html. The Contractor shall post a copy of the above determination of the prevailing rate of per diem wages at each job site and shall make them available to any interested party on request.

9.2. Pursuant to Sections 1720 et seq., and 1770 et seq., of the California Labor Code the Contractor any Subcontractor shall pay not less than said specified rates determined by the Director of the California Department of Industrial Relations to all workmen employed by them in the execution of the Work.

9.3. The wage rates determined by the Director of Industrial Relations and published in the Department of Transportation publication entitled, "General Prevailing Wage Rates", refer to expiration dates. If the published wage rate does not refer to a predetermined wage rate to be paid after the expiration date, said published rate of wage shall be in effect for the life of this contract. If the published wage rate refers to a predetermined wage rate to become effective upon expiration of the published wage rate and the predetermined wage rate is on file with the Department of Industrial Relations, such predetermined wage rate shall become effective on the date following the expiration date and shall apply to this contract in the same manner as if it had been published in said publication. If the predetermined wage rate refers to one or more additional expiration dates with additional predetermined wage rates, which expiration dates occur during the life of this contract, each successive predetermined wage rate shall apply to this contract on the date following the expiration date of the previous wage rate. If the last of such predetermined wage rates expires during the life of this contract, such wage rate shall apply to the balance of the contract.

The successful bidder intending to use a craft or classification not shown on the prevailing rate determinations may be required to pay the rate of the craft or classification most closely related to it.

10. **WAGE RATES**. This contract shall be subject to the following Davis-Bacon Wage Decisions

General Decision Number: CA120001 06/08/2012 CA1

Superseded General Decision Number: CA20100001

State: California

Construction Types: Building, Heavy (Heavy and Dredging), Highway and Residential

County: San Diego County in California.

BUILDING CONSTRUCTION PROJECTS; DREDGING PROJECTS (does not include hopper dredge work); HEAVY CONSTRUCTION PROJECTS (does not include water well drilling); HIGHWAY CONSTRUCTION PROJECTS; RESIDENTIAL CONSTRUCTION PROJECTS (consisting of single family homes and apartments up to and including 4 stories)

Modification Number	Publication Date
0	01/06/2012
1	02/24/2012
2	03/02/2012
3	03/30/2012
4	04/13/2012
5	05/18/2012
6	06/08/2012

ASBE0005-002 06/28/2010

	Rates	Fringes
Asbestos Workers/Insulator (Includes the application of all insulating materials, protective coverings, coatings, and finishes to all types of mechanical systems)	$ 32.79	16.31
Fire Stop Technician (Application of Firestopping Materials for wall openings and penetrations in walls, floors, ceilings and curtain walls).....	$ 24.21	13.76

ASBE0005-004 06/28/2010

	Rates	Fringes
Asbestos Removal worker/hazardous material handler (Includes preparation, wetting, stripping, removal, scrapping, vacuuming, bagging and disposing of all insulation materials from mechanical systems, whether they contain asbestos or not)....	$ 18.70	8.65

BOIL0092-003 05/01/2011

	Rates	Fringes
BOILERMAKER.....	$ 41.26	25.27

BRCA0004-008 11/01/2011

	Rates	Fringes
BRICKLAYER; MARBLE SETTER.....	$ 33.15	14.05

BRCA0018-004 06/01/2011

	Rates	Fringes
MARBLE FINISHER.....	$ 28.02	12.22

	Rates	Fringes
TILE FINISHER.....	$ 27.80	12.54
TILE LAYER.....	$ 38.61	13.83

BRCA0018-010 09/01/2009

	Rates	Fringes
TERRAZZO FINISHER.....	$ 26.59	9.62
TERRAZZO WORKER/SETTER.....	$ 33.63	10.46

CARP0409-002 07/01/2008

	Rates	Fringes
Diver		
(1) Wet.....	$ 663.68	9.82
(2) Standby.....	$ 331.84	9.82
(3) Tender.....	$ 323.84	9.82
(4) Assistant Tender.....	$ 299.84	9.82

Amounts in "Rates' column are per day

CARP0409-008 08/01/2010

	Rates	Fringes
Modular Furniture Installer.....	$ 17.00	7.41

CARP0547-001 07/01/2009

	Rates	Fringes
CARPENTER		
(1) Bridge.....	$ 37.28	10.58
(2) Commercial Building....	$ 32.30	10.58
(3) Heavy & Highway.....	$ 37.15	10.58
(4) Residential Carpenter..	$ 25.84	10.58
(5) Residential Insulation Installer.....	$ 18.00	8.16
MILLWRIGHT.....	$ 37.65	10.58
PILEDRIVERMAN.....	$ 37.28	10.58

CARP0547-002 07/01/2009

Drywall
(1) Work on wood framed construction of single

family residences,
apartments or condominiums

		Rates	Fringes
under four stories			
Drywall Installer/Lather...$ 21.00	8.58		
Drywall Stocker/Scrapper...		$ 11.00	6.67
(2) All other work			
Drywall Installer/Lather...		$ 27.35	9.58
Drywall Stocker/Scrapper...		$ 11.00	6.67

ELEC0569-001 12/01/2011

	Rates	Fringes
Electricians (Tunnel Work)		
Cable Splicer.....	$ 42.21	3%+11.89
Electrician.....	$ 41.46	3%+11.89
Electricians: (All Other Work, Including 4 Stories Residential)		
Cable Splicer.....	$ 38.15	3%+11.89
Electrician.....	$ 36.85	3%+11.89

ELEC0569-005 12/01/2011

	Rates	Fringes
Sound & Communications		
Sound Technician.....	$ 27.32	3%+10.81
Soundman.....	$ 21.86	3%+9.17

SOUND TECHNICIAN: Terminating, operating and performing final check-out

SOUNDMAN: Wire-pulling, splicing, assembling and installing devices

SCOPE OF WORK Assembly, installation, operation, service and maintenance of components or systems as used in closed circuit television, amplified master television distribution, CATV on private property, intercommunication, burglar alarm, fire alarm, life support and all security alarms, private and public telephone and related telephone interconnect, public address, paging, audio, language, electronic, background music system less than line voltage or any system acceptable for class two wiring for private, commercial, or industrial use furnished by leased wire, frequency modulation or other recording devices, electrical

apparatus by means of which electricity is applied to the amplification, transmission, transference, recording or reproduction of voice, music, sound, impulses and video. Excluded from this Scope of Work - transmission, service and maintenance of background music. All of the above shall include the installation and transmission over fiber optics.

ELEC0569-006 12/01/2011

Work on street lighting; traffic signals; and underground systems and/or established easements outside of buildings

	Rates	Fringes
Traffic signal, street light and underground work		
Utility Technician #1	$ 27.25	3%+7.27
Utility Technician #2.....	$ 22.40	3%+7.27

STREET LIGHT & TRAFFIC SIGNAL WORK:

UTILITY TECHNICIAN #1: Installation of street lights and traffic signals, including electrical circuitry, programmable controller, pedestal-mounted electrical meter enclosures and laying of pre-assembled cable in ducts. The layout of electrical systems and communication installation including proper position of trench depths, and radius at duct banks, location for manholes, street lights and traffic signals.

UTILITY TECHNICIAN #2: Distribution of material at jobsite, installation of underground ducts for electrical, telephone, cable TV land communication systems. The setting, leveling, grounding and racking of precast manholes, handholes and transformer pads.

ELEC0569-008 06/01/2011

	Rates	Fringes
ELECTRICIAN (Residential, 1-3 Stories).....	$ 22.37	3%+2.90

ELEC1245-001 06/01/2011

	Rates	Fringes
LINE CONSTRUCTION		
(1) Lineman; Cable splicer..	$ 47.87	13.87

	Rates	Fringes
(2) Equipment specialist (operates crawler tractors, commercial motor vehicles, backhoes, trenchers, cranes (50 tons and below), overhead & underground distribution line equipment).....	$ 38.23	12.80
(3) Groundman.....	$ 29.25	12.53
(4) Powderman.....	$ 42.75	12.97

HOLIDAYS: New Year's Day, M.L. King Day, Memorial Day, Independence Day, Labor Day, Veterans Day, Thanksgiving Day and day after Thanksgiving, Christmas Day

---

ELEV0018-001 01/01/2012

	Rates	Fringes
ELEVATOR MECHANIC.....	$ 47.73	23.535

FOOTNOTE:
PAID VACATION: Employer contributes 8% of regular hourly rate as vacation pay credit for employees with more than 5 years of service, and 6% for 6 months to 5 years of service.
PAID HOLIDAYS: New Years Day, Memorial Day, Independence Day, Labor Day, Veterans Day, Thanksgiving Day, Friday after Thanksgiving, and Christmas Day.

---

* ENGI0012-003 07/01/2011

	Rates	Fringes
OPERATOR: Power Equipment (All Other Work)		
GROUP 1.....	$ 36.13	20.77
GROUP 2.....	$ 36.91	20.77
GROUP 3.....	$ 37.20	20.77
GROUP 4.....	$ 38.69	20.77
GROUP 5.....	$ 40.49	20.77
GROUP 6.....	$ 38.91	20.77
GROUP 8.....	$ 39.02	20.77
GROUP 9.....	$ 40.82	20.77
GROUP 10.....	$ 39.14	20.77
GROUP 11.....	$ 40.94	20.77
GROUP 12.....	$ 39.31	20.77
GROUP 13.....	$ 39.41	20.77

	Rates	Fringes
GROUP 14.....	$ 39.44	20.77
GROUP 15.....	$ 39.52	20.77
GROUP 16.....	$ 39.64	20.77
GROUP 17.....	$ 39.81	20.77
GROUP 18.....	$ 39.91	20.77
GROUP 19.....`	$ 40.02	20.77
GROUP 20.....	$ 40.14	20.77
GROUP 21.....	$ 40.31	20.77
GROUP 22.....	$ 40.41	20.77
GROUP 23.....	$ 40.52	20.77
GROUP 24.....	$ 40.64	20.77
GROUP 25.....	$ 40.81	20.77
OPERATOR: Power Equipment (Cranes, Piledriving & Hoisting)		
GROUP 1.....	$ 37.48	20.77
GROUP 2.....	$ 38.26	20.77
GROUP 3.....	$ 38.55	20.77
GROUP 4.....	$ 38.69	20.77
GROUP 5.....	$ 38.91	20.77
GROUP 6.....	$ 39.02	20.77
GROUP 7.....	$ 39.14	20.77
GROUP 8.....	$ 39.31	20.77
GROUP 9.....	$ 39.48	20.77
GROUP 10.....	$ 40.48	20.77
GROUP 11.....	$ 41.48	20.77
GROUP 12.....	$ 42.48	20.77
GROUP 13.....	$ 43.48	20.77
OPERATOR: Power Equipment (Tunnel Work)		
GROUP 1.....	$ 37.98	20.77
GROUP 2.....	$ 38.76	20.77
GROUP 3.....	$ 39.05	20.77
GROUP 4.....	$ 39.19	20.77
GROUP 5.....	$ 39.41	20.77
GROUP 6.....	$ 39.52	20.77
GROUP 7.....	$ 39.64	20.77

PREMIUM PAY:

$3.75 per hour shall be paid on all Power Equipment Operator work on the followng Military Bases: China Lake Naval Reserve, Vandenberg AFB, Point Arguello, Seely Naval Base, Fort Irwin, Nebo Annex Marine Base, Marine Corp Logistics Base Yermo, Edwards AFB, 29 Palms Marine Base and Camp Pendleton

Workers required to suit up and work in a hazardous material environment: $2.00 per hour additional. Combination mixer and compressor operator on gunite work shall be classified as a concrete mobile mixer operator.

SEE ZONE DEFINITIONS AFTER CLASSIFICATIONS

POWER EQUIPMENT OPERATORS CLASSIFICATIONS

GROUP 1: Bargeman; Brakeman; Compressor operator; Ditch Witch, with seat or similar type equipment; Elevator operator-inside; Engineer Oiler; Forklift operator (includes loed, lull or similar types under 5 tons; Generator operator; Generator, pump or compressor plant operator; Pump operator; Signalman; Switchman

GROUP 2: Asphalt-rubber plant operator (nurse tank operator); Concrete mixer operator-skip type; Conveyor operator; Fireman; Forklift operator (includes loed, lull or similar types over 5 tons; Hydrostatic pump operator; oiler crusher (asphalt or concrete plant); Petromat laydown machine; PJU side dum jack; Screening and conveyor machine operator (or similar types); Skiploader (wheel type up to 3/4 yd. without attachment); Tar pot fireman; Temporary heating plant operator; Trenching machine oiler

GROUP 3: Asphalt-rubber blend operator; Bobcat or similar type (Skid steer); Equipment greaser (rack); Ford Ferguson (with dragtype attachments); Helicopter radioman (ground); Stationary pipe wrapping and cleaning machine operator

GROUP 4: Asphalt plant fireman; Backhoe operator (mini-max or similar type); Boring machine operator; Boxman or mixerman (asphalt or concrete); Chip spreading machine operator; Concrete cleaning decontamination machine operator; Concrete Pump Operator (small portable); Drilling machine operator, small auger types (Texoma super economatic or similar types - Hughes 100 or 200 or similar types - drilling depth of 30' maximum); Equipment greaser (grease truck); Guard rail post driver operator; Highline cableway signalman; Hydra-hammer-aero stomper; Micro Tunneling (above ground tunnel); Power concrete curing machine operator; Power concrete saw operator; Power-driven jumbo form setter operator; Power sweeper operator; Rock Wheel Saw/Trencher; Roller operator (compacting); Screed operator (asphalt or concrete); Trenching machine operator (up to 6 ft.); Vacuum or much truck

GROUP 5: Equipment Greaser (Grease Truck/Multi Shift).

GROUP 6: Articulating material hauler; Asphalt plant engineer; Batch plant operator; Bit sharpener; Concrete joint machine operator (canal and similar type); Concrete planer operator; Dandy digger; Deck engine operator; Derrickman (oilfield type); Drilling machine operator, bucket or auger types (Calweld 100 bucket or similar types - Watson 1000 auger or similar types - Texoma 330, 500 or 600 auger or similar types - drilling depth of 45' maximum); Drilling machine operator; Hydrographic seeder machine operator (straw, pulp or seed), Jackson track maintainer, or similar type; Kalamazoo Switch tamper, or similar type; Machine tool operator; Maginnis internal full slab vibrator, Mechanical berm, curb or gutter(concrete or asphalt); Mechanical finisher operator (concrete, Clary-Johnson-Bidwell or similar); Micro tunnel system (below ground); Pavement breaker operator (truck mounted); Road oil mixing machine operator; Roller operator (asphalt or finish), rubber-tired earth moving equipment (single engine, up to and including 25 yds. struck); Self-propelled tar pipelining machine operator; Skiploader operator (crawler and wheel type, over 3/4 yd. and up to and including 1-1/2 yds.); Slip form pump operator (power driven hydraulic lifting device for concrete forms); Tractor operator-bulldozer, tamper-scraper (single engine, up to 100 h.p. flywheel and similar types, up to and including D-5 and similar types); Tugger hoist operator (1 drum); Ultra high pressure waterjet cutting tool system operator; Vacuum blasting machine operator

GROUP 8: Asphalt or concrete spreading operator (tamping or finishing); Asphalt paving machine operator (Barber Greene or similar type); Asphalt-rubber distribution operator; Backhoe operator (up to and including 3/4 yd.), small ford, Case or similar; Cast-in-place pipe laying machine operator; Combination mixer and compressor operator (gunite work); Compactor operator (self-propelled); Concrete mixer operator (paving); Crushing plant operator; Drill Doctor; Drilling machine operator, Bucket or auger types (Calweld 150 bucket or similar types - Watson 1500, 2000 2500 auger or similar types - Texoma 700, 800 auger or similar types - drilling depth of 60' maximum); Elevating grader operator; Grade checker; Gradall operator; Grouting machine operator; Heavy-duty repairman; Heavy equipment robotics operator; Kalamazoo balliste regulator or similar type; Kolman belt loader and similar type; Le Tourneau blob compactor or similar type; Loader operator (Athey, Euclid, Sierra and similar types); Mobark Chipper or similar; Ozzie padder or similar types; P.C. slot saw; Pneumatic concrete placing machine operator (Hackley-Presswell or similar type);

Pumpcrete gun operator; Rock Drill or similar types; Rotary drill operator (excluding caisson type); Rubber-tired earth-moving equipment operator (single engine, caterpillar, Euclid, Athey Wagon and similar types with any and all attachments over 25 yds. up to and including 50 cu. yds. struck); Rubber-tired earth-moving equipment operator (multiple engine up to and including 25 yds. struck); Rubber-tired scraper operator (self-loading paddle wheel type-John Deere, 1040 and similar single unit); Self-propelled curb and gutter machine operator; Shuttle buggy; Skiploader operator (crawler and wheel type over 1-1/2 yds. up to and including 6-1/2 yds.); Soil remediation plant operator; Surface heaters and planer operator; Tractor compressor drill combination operator; Tractor operator (any type larger than D-5 - 100 flywheel h.p. and over, or similar-bulldozer, tamper, scraper and push tractor single engine); Tractor operator (boom attachments), Traveling pipe wrapping, cleaning and bendng machine operator; Trenching machine operator (over 6 ft. depth capacity, manufacturer's rating); trenching Machine with Road Miner attachment (over 6 ft depth capacity): Ultra high pressure waterjet cutting tool system mechanic; Water pull (compaction) operator

GROUP 9: Heavy Duty Repairman

GROUP 10: Drilling machine operator, Bucket or auger types (Calweld 200 B bucket or similar types-Watson 3000 or 5000 auger or similar types-Texoma 900 auger or similar types-drilling depth of 105' maximum); Dual drum mixer, dynamic compactor LDC350 (or similar types); Monorail locomotive operator (diesel, gas or electric); Motor patrol-blade operator (single engine); Multiple engine tractor operator (Euclid and similar type-except Quad 9 cat.); Rubber-tired earth-moving equipment operator (single engine, over 50 yds. struck); Pneumatic pipe ramming tool and similar types; Prestressed wrapping machine operator; Rubber-tired earth-moving equipment operator (single engine, over 50 yds. struck); Rubber tired earth moving equipment operator (multiple engine, Euclid, caterpillar and similar over 25 yds. and up to 50 yds. struck), Tower crane repairman; Tractor loader operator (crawler and wheel type over 6-1/2 yds.); Woods mixer operator (and similar Pugmill equipment)

GROUP 11: Heavy Duty Repairman - Welder Combination, Welder - Certified.

GROUP 12: Auto grader operator; Automatic slip form operator; Drilling machine operator, bucket or auger types (Calweld, auger 200 CA or similar types - Watson, auger 6000 or similar types - Hughes Super Duty, auger 200 or similar types - drilling depth of 175' maximum); Hoe ram or similar with compressor; Mass excavator operator less tha 750 cu. yards; Mechanical finishing machine operator; Mobile form traveler operator; Motor patrol operator (multi-engine); Pipe mobile machine operator; Rubber-tired earth- moving equipment operator (multiple engine, Euclid, Caterpillar and similar type, over 50 cu. yds. struck); Rubber-tired self- loading scraper operator (paddle-wheel-auger type self-loading - two (2) or more units)

GROUP 13: Rubber-tired earth-moving equipment operator operating equipment with push-pull system (single engine, up to and including 25 yds. struck)

GROUP 14: Canal liner operator; Canal trimmer operator; Remote- control earth-moving equipment operator (operating a second piece of equipment: $1.00 per hour additional); Wheel excavator operator (over 750 cu. yds.)

GROUP 15: Rubber-tired earth-moving equipment operator, operating equipment with push-pull system (single engine, Caterpillar, Euclid, Athey Wagon and similar types with any and all attachments over 25 yds. and up to and including 50 yds. struck); Rubber-tired earth-moving equipment operator, operating equipment with push-pull system (multiple engine-up to and including 25 yds. struck)

GROUP 16: Rubber-tired earth-moving equipment operator, operating equipment with push-pull system (single engine, over 50 yds. struck); Rubber-tired earth-moving equipment operator, operating equipment with push-pull system (multiple engine, Euclid, Caterpillar and similar, over 25 yds. and up to 50 yds. struck)

GROUP 17: Rubber-tired earth-moving equipment operator, operating equipment with push-pull system (multiple engine, Euclid, Caterpillar and similar, over 50 cu. yds. struck); Tandem tractor operator (operating crawler type tractors in tandem - Quad 9 and similar type)

GROUP 18: Rubber-tired earth-moving equipment operator, operating in tandem (scrapers, belly dumps and similar types in any combination, excluding compaction units - single engine, up to and including 25 yds. struck)

GROUP 19: Rotex concrete belt operator (or similar types); Rubber-tired earth-moving equipment operator, operating in tandem (scrapers, belly dumps and similar types in any combination, excluding compaction units - single engine, Caterpillar, Euclid, Athey Wagon and similar types with any and all attachments over 25 yds.and up to and including 50 cu. yds. struck); Rubber-tired earth-moving equipment operator, operating in tandem (scrapers, belly dumps and similar types in any combination, excluding compaction units - multiple engine, up to and including 25 yds. struck)

GROUP 20: Rubber-tired earth-moving equipment operator, operating in tandem (scrapers, belly dumps and similar types in any combination, excluding compaction units - single engine, over 50 yds. struck); Rubber-tired earth-moving equipment operator, operating in tandem (scrapers, belly dumps, and similar types in any combination, excluding compaction units - multiple engine, Euclid, Caterpillar and similar, over 25 yds. and up to 50 yds. struck)

GROUP 21: Rubber-tired earth-moving equipment operator, operating in tandem (scrapers, belly dumps and similar types in any combination, excluding compaction units - multiple engine, Euclid, Caterpillar and similar type, over 50 cu. yds. struck)
GROUP 22: Rubber-tired earth-moving equipment operator, operating equipment with the tandem push-pull system (single engine, up to and including 25 yds. struck)

GROUP 23: Rubber-tired earth-moving equipment operator, operating equipment with the tandem push-pull system (single engine, Caterpillar, Euclid, Athey Wagon and similar types with any and all attachments over 25 yds. and up to and including 50 yds. struck); Rubber-tired earth-moving equipment operator, operating with the tandem push-pull system (multiple engine, up to and including 25 yds. struck)

GROUP 24: Rubber-tired earth-moving equipment operator, operating equipment with the tandem push-pull system (single engine, over 50 yds. struck); Rubber-tired earth-moving equipment operator, operating equipment with the tandem push-pull system (multiple engine, Euclid, Caterpillar and similar, over 25 yds. and up to 50 yds. struck)

GROUP 25: Concrete pump operator-truck mounted; Rubber-tired earth-moving equipment operator, operating equipment with

the tandem push-pull system (multiple engine, Euclid, Caterpillar and similar type, over 50 cu. yds. struck)

CRANES, PILEDRIVING AND HOISTING EQUIPMENT CLASSIFICATIONS

GROUP 1: Engineer oiler; Fork lift operator (includes loed, lull or similar types)

GROUP 2: Truck crane oiler

GROUP 3: A-frame or winch truck operator; Ross carrier operator (jobsite)

GROUP 4: Bridge-type unloader and turntable operator; Helicopter hoist operator

GROUP 5: Hydraulic boom truck; Stinger crane (Austin-Western or similar type); Tugger hoist operator (1 drum)

GROUP 6: Bridge crane operator; Cretor crane operator; Hoist operator (Chicago boom and similar type); Lift mobile operator; Lift slab machine operator (Vagtborg and similar types); Material hoist and/or manlift operator; Polar gantry crane operator; Self Climbing scaffold (or similar type); Shovel, backhoe, dragline, clamshell operator (over 3/4 yd. and up to 5 cu. yds. mrc); Tugger hoist operator

GROUP 7: Pedestal crane operator; Shovel, backhoe, dragline, clamshell operator (over 5 cu. yds. mrc); Tower crane repair; Tugger hoist operator (3 drum)

GROUP 8: Crane operator (up to and including 25 ton capacity); Crawler transporter operator; Derrick barge operator (up to and including 25 ton capacity); Hoist operator, stiff legs, Guy derrick or similar type (up to and including 25 ton capacity); Shovel, backhoe, dragline, clamshell operator (over 7 cu. yds., M.R.C.)

GROUP 9: Crane operator (over 25 tons and up to and including 50 tons mrc); Derrick barge operator (over 25 tons up to and including 50 tons mrc); Highline cableway operator; Hoist operator, stiff legs, Guy derrick or similar type (over 25 tons up to and including 50 tons mrc); K-crane operator; Polar crane operator; Self erecting tower crane operator maximum lifting capacity ten tons

GROUP 10: Crane operator (over 50 tons and up to and including 100 tons mrc); Derrick barge operator (over 50 tons up to and including 100 tons mrc); Hoist operator,

stiff legs, Guy derrick or similar type (over 50 tons up to and including 100 tons mrc), Mobile tower crane operator (over 50 tons, up to and including 100 tons M.R.C.); Tower crane operator and tower gantry

GROUP 11: Crane operator (over 100 tons and up to and including 200 tons mrc); Derrick barge operator (over 100 tons up to and including 200 tons mrc); Hoist operator, stiff legs, Guy derrick or similar type (over 100 tons up to and including 200 tons mrc); Mobile tower crane operator (over 100 tons up to and including 200 tons mrc)

GROUP 12: Crane operator (over 200 tons up to and including 300 tons mrc); Derrick barge operator (over 200 tons up to and including 300 tons mrc); Hoist operator, stiff legs, Guy derrick or similar type (over 200 tons, up to and including 300 tons mrc); Mobile tower crane operator (over 200 tons, up to and including 300 tons mrc)

GROUP 13: Crane operator (over 300 tons); Derrick barge operator (over 300 tons); Helicopter pilot; Hoist operator, stiff legs, Guy derrick or similar type (over 300 tons); Mobile tower crane operator (over 300 tons)

TUNNEL CLASSIFICATIONS

GROUP 1: Skiploader (wheel type up to 3/4 yd. without attachment)

GROUP 2: Power-driven jumbo form setter operator

GROUP 3: Dinkey locomotive or motorperson (up to and including 10 tons)

GROUP 4: Bit sharpener; Equipment greaser (grease truck); Slip form pump operator (power-driven hydraulic lifting device for concrete forms); Tugger hoist operator (1 drum); Tunnel locomotive operator (over 10 and up to and including 30 tons)

GROUP 5: Backhoe operator (up to and including 3/4 yd.); Small Ford, Case or similar; Drill doctor; Grouting machine operator; Heading shield operator; Heavy-duty repairperson; Loader operator (Athey, Euclid, Sierra and similar types); Mucking machine operator (1/4 yd., rubber-tired, rail or track type); Pneumatic concrete placing machine operator (Hackley-Presswell or similar type); Pneumatic heading shield (tunnel); Pumpcrete gun operator; Tractor compressor drill combination operator; Tugger hoist operator (2 drum); Tunnel locomotive operator (over 30 tons)

GROUP 6: Heavy Duty Repairman

GROUP 7: Tunnel mole boring machine operator

ENGINEERS ZONES

$1.00 additional per hour for all of IMPERIAL County and the portions of KERN, RIVERSIDE & SAN BERNARDINO Counties as defined below:

That area within the following Boundary: Begin in San Bernardino County, approximately 3 miles NE of the intersection of I-15 and the California State line at that point which is the NW corner of Section 1, T17N,m R14E, San Bernardino Meridian. Continue W in a straight line to that point which is the SW corner of the northwest quarter of Section 6, T27S, R42E, Mt. Diablo Meridian. Continue North to the intersection with the Inyo County Boundary at that point which is the NE corner of the western half of the northern quarter of Section 6, T25S, R42E, MDM. Continue W along the Inyo and San Bernardino County boundary until the intersection with Kern County, as that point which is the SE corner of Section 34, T24S, R40E, MDM. Continue W along the Inyo and Kern County boundary until the intersection with Tulare County, at that point which is the SW corner of the SE quarter of Section 32, T24S, R37E, MDM. Continue W along the Kern and Tulare County boundary, until that point which is the NW corner of T25S, R32E, MDM. Continue S following R32E lines to the NW corner of T31S, R32E, MDM. Continue W to the NW corner of T31S, R31E, MDM. Continue S to the SW corner of T32S, R31E, MDM. Continue W to SW corner of SE quarter of Section 34, T32S, R30E, MDM. Continue S to SW corner of T11N, R17W, SBM. Continue E along south boundary of T11N, SBM to SW corner of T11N, R7W, SBM. Continue S to SW corner of T9N, R7W, SBM. Continue E along south boundary of T9N, SBM to SW corner of T9N, R1E, SBM. Continue S along west boundary of R1E, SMB to Riverside County line at the SW corner of T1S, R1E, SBM. Continue E along south boundary of T1s, SBM (Riverside County Line) to SW corner of T1S, R10E, SBM. Continue S along west boundary of R10E, SBM to Imperial County line at the SW corner of T8S, R10E, SBM. Continue W along Imperial and Riverside county line to NW corner of T9S, R9E, SBM. Continue S along the boundary between Imperial and San Diego Counties, along the west edge of R9E, SBM to the south boundary of Imperial County/California state line. Follow the California state line west to Arizona state line, then north to Nevada state line, then continuing NW back to start at the point which is the NW corner of Section 1, T17N, R14E, SBM

$1.00 additional per hour for portions of SAN LUIS OBISPO, KERN, SANTA BARBARA & VENTURA as defined below:

That area within the following Boundary: Begin approximately 5 miles north of the community of Cholame, on the Monterey County and San Luis Obispo County boundary at the NW corner of T25S, R16E, Mt. Diablo Meridian. Continue south along the west side of R16E to the SW corner of T30S, R16E, MDM. Continue E to SW corner of T30S, R17E, MDM. Continue S to SW corner of T31S, R17E, MDM. Continue E to SW corner of T31S, R18E, MDM. Continue S along West side of R18E, MDM as it crosses into San Bernardino Meridian numbering area and becomes R30W. Follow the west side of R30W, SBM to the SW corner of T9N, R30W, SBM. Continue E along the south edge of T9N, SBM to the Santa Barbara County and Ventura County boundary at that point whch is the SW corner of Section 34.T9N, R24W, SBM, continue S along the Ventura County line to that point which is the SW corner of the SE quarter of Section 32, T7N, R24W, SBM. Continue E along the south edge of T7N, SBM to the SE corner to T7N, R21W, SBM. Continue N along East side of R21W, SBM to Ventura County and Kern County boundary at the NE corner of T8N, R21W. Continue W along the Ventura County and Kern County boundary to the SE corner of T9N, R21W. Continue North along the East edge of R21W, SBM to the NE corner of T12N, R21W, SBM. Continue West along the north edge of T12N, SBM to the SE corner of T32S, R21E, MDM. [T12N SBM is a think strip between T11N SBM and T32S MDM]. Continue North along the East side of R21E, MDM to the Kings County and Kern County border at the NE corner of T25S, R21E, MDM, continue West along the Kings County and Kern County Boundary until the intersection of San Luis Obispo County. Continue west along the Kings County and San Luis Obispo County boundary until the intersection with Monterey County. Continue West along the Monterey County and San Luis Obispo County boundary to the beginning point at the NW corner of T25S, R16E, MDM.

$2.00 additional per hour for INYO and MONO Counties and the Northern portion of SAN BERNARDINO County as defined below:

That area within the following Boundary: Begin at the intersection of the northern boundary of Mono County and the California state line at the point which is the center of Section 17, T10N, R22E, Mt. Diablo Meridian. Continue S then SE along the entire western boundary of Mono County, until it reaches Inyo County at the point which is the NE corner of the Western half of the NW quarter of Section 2, T8S, R29E, MDM. Continue SSE along the entire western boundary of Inyo County, until the intersection with Kern County at the point which is the SW corner of the SE 1/4 of Section 32, T24S, R37E, MDM.

Continue E along the Inyo and Kern County boundary until the intersection with San Bernardino County at that point which is the SE corner of section 34, T24S, R40E, MDM. Continue E along the Inyo and San Bernardino County boundary until the point which is the NE corner of the Western half of the NW quarter of Section 6, T25S, R42E, MDM. Continue S to that point which is the SW corner of the NW quarter of Section 6, T27S, R42E, MDM. Continue E in a straight line to the California and Nevada state border at the point which is the NW corner of Section 1, T17N, R14E, San Bernardino Meridian. Then continue NW along the state line to the starting point, which is the center of Section 18, T10N, R22E, MDM.

REMAINING AREA NOT DEFINED ABOVE RECIEVES BASE RATE

ENGI0012-004 08/01/2009

	Rates	Fringes
OPERATOR: Power Equipment (DREDGING)		
(1) Leverman.....	$ 44.83	17.22
(2) Dredge dozer.....	$ 40.36	17.22
(3) Deckmate.....	$ 40.25	17.22
(4) Winch operator (stern winch on dredge).....	$ 39.70	17.22
(5) Fireman-Oiler, Deckhand, Bargeman, Leveehand.....	$ 39.16	17.22
(6) Barge Mate.....	$ 39.77	17.22

IRON0002-004 07/01/2011

	Rates	Fringes
Ironworkers:		
Fence Erector.....	$ 26.58	15.76
Ornamental, Reinforcing and Structural.....	$ 33.00	24.40

PREMIUM PAY:

$6.00 additional per hour at the following locations:

China Lake Naval Test Station, Chocolate Mountains Naval Reserve-Niland,
Edwards AFB, Fort Irwin Military Station, Fort Irwin Training Center-Goldstone, San Clemente Island, San Nicholas Island, Susanville Federal Prison, 29 Palms - Marine Corps, U.S. Marine

Base - Barstow, U.S. Naval Air Facility - Sealey, Vandenberg AFB

$4.00 additional per hour at the following locations:

Army Defense Language Institute - Monterey, Fallon Air Base, Naval Post Graduate School - Monterey, Yermo Marine Corps Logistics Center

$2.00 additional per hour at the following locations:

Port Hueneme, Port Mugu, U.S. Coast Guard Station - Two Rock

LABO0089-001 07/01/2011

	Rates	Fringes
LABORER (BUILDING and all other Residential Construction)		
Group 1.....	$ 26.50	14.92
Group 2.....	$ 26.96	14.92
Group 3.....	$ 27.37	14.92
Group 4.....	$ 28.21	14.92
Group 5.....	$ 32.33	14.92
LABORER (RESIDENTIAL CONSTRUCTION - See definition below)		
(1) Laborer.....	$ 23.48	14.13
(2) Cleanup, Landscaping, Fencing (chain link or wood).....	$ 22.19	14.13

RESIDENTIAL DEFINITION: Wood or metal frame construction of single family residences, apartments and condominums - excluding (a) projects that exceed three stories over a garage level, (b) any utility work such as telephone, gas, water, sewer and other utilities and (c) any fine grading work, utility work or paving work in the future street and public right-of-way; but including all rough grading work at the job site behind the existing right of way

LABORER CLASSIFICATIONS

GROUP 1: Cleaning and handling of panel forms; Concrete Screeding for Rought Strike-off; Concrete, water curing; Demolition laborer; Flagman; Gas, oil and/or water pipeline laborer; General Laborer; General clean-up laborer; Landscape laborer; Jetting laborer; Temporary water and air lines laborer; Material hoseman (walls, slabs, floors

and decks); Plugging, filling of Shee-bolt holes; Dry packing of concrete; Railroad maintenance, Repair Trackman and road beds, Streetcar and railroad construction trac laborers; Slip form raisers; Slurry seal crews (mixer operator, applicator operator, squeegee man, Shuttle man, top man), filling of cracks by any method on any surface; Tarman and mortar man; Tool crib or tool house laborer; Window cleaner; Wire Mesh puling-all concrete pouring operations

GROUP 2: Asphalt Shoveler; Cement Dumper (on 1 yard or larger mixer and handling bulk cement); Cesspool digger and installer; Chucktender; Chute man, pouring concrete, the handling of the cute from ready mix trucks, such as walls, slabs, decks, floors, foundations, footings, curbs, gutters and sidewalks; Concrete curer-impervious membrane and form oiler; Cutting torch operator (demoliton); Guinea chaser; Headboard man-asphlt; Laborer, packing rod steel and pans; membrane vapor barrier installer; Power broom sweepers (small); Riiprap, stonepaver, placing stone or wet sacked concrete; Roto scraper and tiller; Tank sealer and cleaner; Tree climber, faller, chain saw operator, Pittsburgh Chipper and similar type brush shredders; Underground laborers, including caisson bellower

GROUP 3: Buggymobile; Concrete cutting torch; Concrete cutting torch; Concrete pile cutter; Driller, jackhammer, 2 1/2 feet drill steel or longer; Dri Pak-it machine; High sealer (including drilling of same); Hydro seeder and similar type; Impact wrench, mult-plate; Kettlemen, potmen and mean applying asphalt, lay-kold, creosote, line caustic and similar type materials (applying means applying, dipping, brushing or handling of such materials for pipe wrapping and waterproofing); Operators of pneumatic, gas, electric tools, vibratring machines, pavement breakers, air blasting, come-along, and similar mechanical tools not separately classified herein; Pipelayers back up man coating, grouting, making of joints, sealing, caulking, diapering and inclduing rubber gasket joints, pointing and any and all other services; Rotary Scarifier or multiple head concrete chipping scaarifier; Steel header board man and guideline setter; Tampers, Barko, Wacker and similar type; Trenching machine, handpropelled

GROUP 4: Asphalt raker, luterman, ironer, apshalt dumpman and asphalt spreader boxes (all types); Concrete core cutter (walls, floors or ceilings), Grinder or sander; Concrete saw man; cutting walls or flat work, scoring old or new concrete; Cribber, shorer, lagging, sheeting and trench

bracing, hand-guided lagging hammer; Laser beam in connection with laborer's work; Oversize concrete vibrator operator 70 pounds and over; Pipelayer performing all services in the laying, installation and all forms of connection of pipe from the point of receiving pipe in the ditch until completion of oepration, including any and all forms of tubular material, whether pipe, metallic or non-metallic, conduit, and any other stationary type of tubular device used for the conveying of any substance or element, whether water, sewage, solid, gas, air or other product whatsoever and without regard to the nature of material from which the tubular material is fabricated; No joint pipe and stripping of same; Prefabricated manhole installer; Sandblaster (nozzleman), Porta shot-blast, water blasting

GROUP 5: Blasters Powderman-All work of loading holes, placing and blasting of all pwder and explosives of whatever type, regardless of method used for such loading and placing; Driller-all power drills, excluding jackhammer, whether core, diamond, wagon, track, multiple unit, and any and all other types of mechanical drills without regard to the form of motive power.

LABO0089-002 07/01/2010

	Rates	Fringes
LABORER (MASON TENDER).....	$ 27.11	14.38

LABO0089-004 07/01/2011

HEAVY AND HIGHWAY CONSTRUCTION

	Rates	Fringes
Laborers:		
GROUP 1.....	$ 26.50	14.92
GROUP 2.....	$ 26.96	14.92
GROUP 3.....	$ 27.37	14.92
GROUP 4.....	$ 28.21	14.92
GROUP 5.....	$ 32.33	14.92

LABORER CLASSIFICATIONS

GROUP 1: Laborer: General or Construction Laborer, Landscape Laborer. Asphalt Rubber Material Loader. Boring Machine Tender (outside), Carpenter Laborer (cleaning, handling, oiling & blowing of panel forms and lumber), Concrete

Laborer, Concrete Screeding for rough strike-off, Concrete water curing. Concrete Curb & Gutter laborer, Certified Confined Space Laborer, Demolition laborer & Cleaning of Brick and lumber,Expansion Joint Caulking; Environmental Remediation, Monitoring Well, Toxic waste and Geotechnical Drill tender, Fine Grader, Fire Watcher, Limbers, Brush Loader, Pilers and Debris Handlers. flagman. Gas Oil and Water Pipeline Laborer. Material Hoseman (slabs, walls, floors, decks); Plugging, filling of shee bolt holes; Dry packing of concrete and patching; Post Holer Digger (manual); Railroad maintenance, repair trackman, road beds; Rigging & signaling; Scaler, Slip-Form Raisers, Filling cracks on any surface, tool Crib or Tool House Laborer, Traffic control (signs, barriers, barricades, delineator, cones etc.), Window Cleaner

GROUP 2: Asphalt abatement; Buggymobile; Cement dumper (on 1 yd. or larger mixers and handling bulk cement); Concrete curer, impervious membrane and form oiler; Chute man, pouring concrete; Concrete cutting torch; Concrete pile cutter; driller/Jackhammer, with drill steel 2 1/'2 feet or longer; Dry pak-it machine; Fence erector; Pipeline wrapper, gas, oil, water, pot tender & form man; Grout man; Installation of all asphalt overlay fabric and materials used for reinforcing asphalt; Irrigation laborer; Kettleman-Potman hot mop, includes applying asphalt, lay-klold, creosote, lime caustic and similar tyhpes of materials (dipping, brushing, handling) and waterproofing; Membrane vapor barrier installer; Pipelayer backup man (coating, grouting, making of joints, sealing caulkiing, diapering including rubber basket joints, pointing); Rotary scarifier, multiple head concrete chipper; Rock slinger; Roto scraper & tiller; Sandblaster pot tender; Septic tank digger/installer; Tamper/wacker operator; Tank scaler & cleaner; Tar man & mortar man; Tree climber/faller, chainb saw operator, Pittsburgh chipper & similar type brush shredders.

GROUP 3: Asphalt, installation of all frabrics; Buggy Mobile Man, Bushing hammer; Compactor (all types), Concrete Curer - Impervious membrane, Form Oiler, Concrete Cutting Torch, Concrete Pile Cutter,Driller/Jackhammer with drill steel 2 1/2 ft or longer, Dry Pak-it machine, Fence erector including manual post hole digging, Gas oil or water Pipeline Wrapper - 6 ft pipe and over, Guradrail erector, Hydro seeder, Impact Wrench man (multi plate), kettleman-Potman Hot Mop includes applying Asphalt, Lay-Kold, Creosote, lime caustic and similar types of materials (dipping, brushing or handling) and

waterproofing. Laser Beam in connection with Laborer work. High Scaler, Operators of Pneumatic Gas or Electric Tools, Vibrating Machines, Pavement Breakers, Air Blasting, Come-Alongs and similar mechanical tools, Remote-Controlled Robotic Tools in connection with Laborers work. Pipelayer Backup Man (Coating, grouting,m makeing of joints, sealing, caulking, diapering including rubber gasket joints, pointing and other services). Power Post Hole Digger, Rotary Scarifier (multiple head concrete chipper scarifier), Rock Slinger, Shot Blast equipment (8 to 48 inches), Steel Headerboard Man and Guideline Setter, Tamper/Wacker operator and similar types, Trenching Machine hand propelled.

GROUP 4: Any worker exposed to raw sewage. Asphalt Raker, Luteman, Asphalt Dumpman, Asphalt Spreader Boxes, Concrete Core Cutter, Concrete Saw Man, Cribber, Shorer, Head Rock Slinger. Installation of subsurface instrumentation, monitoring wells or points, remediation system installer; Laborer, asphalt-rubber distributor bootman; Oversize concrete vibrator operators, 70 pounds or over. Pipelayer, Prfefabricated Manhole Installer, Sandblast Nozzleman (Water Balsting-Porta Shot Blast), Traffic Lane Closure.

GROUP 5: Blasters Powderman-All work of loading holes, placing and blasting of all powder and explosives of whatever type, regardless of method used for such loading and placing; Horizontal directional driller, Boring system, Electronic traking, Driller: all power drills excluding jackhammer, whether core, diamond, wagon, track, multiple unit, and all other types of mechanical drills without regard to form of motive power. Environmental remediation, Monitoring well, Toxic waste and Geotechnical driller, Toxic waste removal. Welding in connection with Laborer's work.

LABO0300-008 08/05/2009

	Rates	Fringes
LABORER		
PLASTER CLEAN-UP LABORER....	$ 26.65	15.95
PLASTER TENDER.....	$ 29.20	15.95

Work at Military Bases - $3.00 additional per hour:
Coronado Naval Amphibious Base, Fort Irwin, Marine Corps Air Station-29 Palms, Imperial Beach Naval Air Station, Marine Corps Logistics Supply Base, Marine Corps Pickle Meadows, Mountain Warfare Training Center, Naval Air

Facility-Seeley, North Island Naval Air Station, Vandenberg AFB.

LABO0882-002 01/01/2010

	Rates	Fringes
Asbestos Removal Laborer.....	$ 26.15	11.65

SCOPE OF WORK: Includes site mobilization, initial site cleanup, site preparation, removal of asbestos-containing material and toxic waste, encapsulation, enclosure and disposal of asbestos- containing materials and toxic waste by hand or with equipment or machinery; scaffolding, fabrication of temporary wooden barriers and assembly of decontamination stations.

LABO1184-001 07/01/2011

	Rates	Fringes
Laborers: (HORIZONTAL DIRECTIONAL DRILLING)		
(1) Drilling Crew Laborer...	$ 28.01	11.48
(2) Vehicle Operator/Hauler.	$ 28.18	11.48
(3) Horizontal Directional Drill Operator.....	$ 30.03	11.48
(4) Electronic Tracking Locator.....	$ 32.03	11.48

Rates Fringes

Laborers: (STRIPING/SLURRY SEAL)		
GROUP 1.....	$ 28.50	14.56
GROUP 2.....	$ 29.80	14.56
GROUP 3.....	$ 31.81	14.56
GROUP 4.....	$ 33.55	14.56

LABORERS - STRIPING CLASSIFICATIONS

GROUP 1: Protective coating, pavement sealing, including repair and filling of cracks by any method on any surface in parking lots, game courts and playgrounds; carstops; operation of all related machinery and equipment; equipment repair technician

GROUP 2: Traffic surface abrasive blaster; pot tender - removal of all traffic lines and markings by any method (sandblasting, waterblasting, grinding, etc.) and

preparation of surface for coatings. Traffic control person: controlling and directing traffic through both conventional and moving lane closures; operation of all related machinery and equipment

GROUP 3: Traffic delineating device applicator: Layout and application of pavement markers, delineating signs, rumble and traffic bars, adhesives, guide markers, other traffic delineating devices including traffic control. This category includes all traffic related surface preparation (sandblasting, waterblasting, grinding) as part of the application process. Traffic protective delineating system installer: removes, relocates, installs, permanently affixed roadside and parking delineation barricades, fencing, cable anchor, guard rail, reference signs, monument markers; operation of all related machinery and equipment; power broom sweeper

GROUP 4: Striper: layout and application of traffic stripes and markings; hot thermo plastic; tape traffic stripes and markings, including traffic control; operation of all related machinery and equipment

---

PAIN0036-001 01/01/2012

	Rates	Fringes
Painters: (Including Lead Abatement)		
(1) Repaint (excludes San Diego County).....	$ 26.05	10.35
(2) All Other Work.....	$ 29.32	10.35

REPAINT of any previously painted structure. Exceptions: work involving the aerospace industry, breweries, commercial recreational facilities, hotels which operate commercial establishments as part of hotel service, and sports facilities.

PAIN0036-010 10/05/2011

	Rates	Fringes
DRYWALL FINISHER/TAPER		
(1) Building & Heavy Construction.....	$ 33.22	13.81
(2) Residential Construction (Wood frame apartments, single family		

	Rates	Fringes
homes and multi-duplexes up to and including four stories).....	$ 21.72	11.13

PAIN0036-012 10/01/2011

	Rates	Fringes
GLAZIER.....	$ 38.80	15.50

PAIN0036-019 02/01/2009

	Rates	Fringes
SOFT FLOOR LAYER.....	$ 26.77	11.75

PLAS0200-005 08/01/2011

	Rates	Fringes
PLASTERER.....	$ 35.29	12.05

NORTH ISLAND NAVAL AIR STATION, COLORADO NAVAL AMPHIBIOUS BASE, IMPERIAL BEACH NAVAL AIR STATION: $3.00 additional per hour.

PLAS0500-001 06/26/2010

	Rates	Fringes
CEMENT MASON/CONCRETE FINISHER		
GROUP 1.....	$ 22.29	9.90
GROUP 2.....	$ 23.94	9.90
GROUP 3.....	$ 26.57	10.35

CEMENT MASONS - work inside the building line, meeting the following criteria:

GROUP 1: Residential wood frame project of any size; work classified as Type III, IV or Type V construction; interior tenant improvement work regardless the size of the project; any wood frame project of four stories or less.

GROUP 2: Work classified as type I and II construction

GROUP 3: All other work

PLUM0016-006 07/01/2011

	Rates	Fringes
PLUMBER, PIPEFITTER, STEAMFITTER		
Camp Pendleton.....	$ 44.00	19.35
Plumber and Pipefitter All other work except work on new additions and remodeling of bars, restaurant, stores and commercial buildings not to exceed 5,000 sq. ft. of floor space and work on strip malls, light commercial, tenant improvement and remodel work.....	$ 39.50	19.35
Work ONLY on new additions and remodeling of commercial buildings, bars, restaurants, and stores not to exceed 5,000 sq. ft. of floor space.....	$ 38.30	18.37
Work ONLY on strip malls, light commercial, tenant improvement and remodel work.....	$ 30.79	16.70

PLUM0016-011 07/01/2011

	Rates	Fringes
PLUMBER/PIPEFITTER		
Residential.....	$ 31.92	15.27

PLUM0345-001 07/01/2011

	Rates	Fringes
PLUMBER		
Landscape/Irrigation Fitter.	$ 27.35	16.34
Sewer & Storm Drain Work....	$ 26.82	18.18

ROOF0045-001 07/01/2011

	Rates	Fringes
ROOFER.....	$ 23.46	6.70

SFCA0669-001 04/01/2012

	Rates	Fringes
SPRINKLER FITTER.....	$ 34.18	18.51

SHEE0206-001 01/01/2012

	Rates	Fringes
SHEET METAL WORKER		
Camp Pendleton.....	$ 35.05	19.23
Except Camp Pendleton.....	$ 33.05	19.23
Sheet Metal Technician.....	$ 25.22	6.69

SHEET METAL TECHNICIAN - SCOPE:
a. Existing residential buildings, both single and multi-family, where each unit is heated and/or cooled by a separate system b. New single family residential buildings including tracts. c. New multi-family residential buildings, not exceeding five stories of living space in height, provided each unit is heated or cooled by a separate system. Hotels and motels are excluded. d. LIGHT COMMERCIAL WORK: Any sheet metal, heating and air conditioning work performed on a project where the total construction cost, excluding land, is under $1,000,000 e. TENANT IMPROVEMENT WORK: Any work necessary to finish interior spaces to conform to the occupants of commercial buildings, after completion of the building shell

---

TEAM0036-001 07/01/2011

	Rates	Fringes
Truck drivers:		
GROUP 1.....	$ 14.90	19.50
GROUP 2.....	$ 24.49	19.50
GROUP 3.....	$ 24.69	19.50
GROUP 4.....	$ 24.89	19.50
GROUP 5.....	$ 25.09	19.50
GROUP 6.....	$ 25.59	19.50
GROUP 7.....	$ 27.09	19.50

FOOTNOTE: HAZMAT PAY: Work on a hazmat job, where hazmat certification is required, shall be paid, in addition to the classification working in, as follows: Levels A, B and C - +$1.00 per hour. Workers shall be paid hazmat pay in increments of four (4) and eight (8) hours.

TRUCK DRIVER CLASSIFICATIONS

GROUP 1: Fuel Man, Swamper

GROUP 2: 2-axle Dump Truck, 2-axle Flat Bed,Concrete Pumping Truck, Industrial Lift Truck, Motorized Traffic Control, Pickup Truck on Jobsite

GROUP 3: 2-axle Water Truck, 3-axle Dump Truck, 3-axle Flat Bed, Erosion Control Nozzleman, Dump Crete Truck under 6.5 yd, Forklift 15,000 lbs and over, Prell Truck, Pipeline Work Truck Driver, Road Oil Spreader, Cement Distributor or Slurry Driver, Bootman, Ross Carrier

GROUP 4: Off-road Dump Truck under 35 tons 4-axles but less than 7-axles, Low-Bed Truck & Trailer, Transit Mix Trucks under 8 yd, 3-axle Water Truck, Erosion Control Driver, Grout Mixer Truck, Dump Crete 6.5yd and over, Dumpster Trucks, DW 10, DW 20 and over, Fuel Truck and Dynamite, Truck Greaser, Truck Mounted Mobile Sweeper 2-axle Winch Truck

GROUP 5: Off-road Dump Truck 35 tons and over, 7-axles or more, Transit Mix Trucks 8 yd and over, A-Frame Truck, Swedish Cranes

GROUP 6: Off-Road Special Equipment (including but not limited to Water Pull Tankers, Athey Wagons, DJB, B70 Wuclids or like Equipment)

GROUP 7: Repairman

WELDERS - Receive rate prescribed for craft performing operation to which welding is incidental.

==========

Unlisted classifications needed for work not included within the scope of the classifications listed may be added after award only as provided in the labor standards contract clauses (29CFR 5.5 (a) (1) (ii)).

The body of each wage determination lists the classification and wage rates that have been found to be prevailing for the cited type(s) of construction in the area covered by the wage determination. The classifications are listed in alphabetical order of "identifiers" that indicate whether the particular rate is union or non-union.

Union Identifiers

An identifier enclosed in dotted lines beginning with characters other than "SU" denotes that the union classification and rate have found to be prevailing for that classification. Example: PLUM0198-005 07/01/2011. The first four letters , PLUM, indicate the international union and the four-digit number, 0198, that follows indicates the local union number or district council number where applicable , i.e., Plumbers Local 0198. The next number, 005 in the example, is an internal number used in processing the wage determination. The date, 07/01/2011, following these characters is the effective date of the most current negotiated rate/collective bargaining agreement which would be July 1, 2011 in the above example.

Union prevailing wage rates will be updated to reflect any changes in the collective bargaining agreements governing the rate.

Non-Union Identifiers

Classifications listed under an "SU" identifier were derived from survey data by computing average rates and are not union rates; however, the data used in computing these rates may include both union and non-union data. Example: SULA2004-007 5/13/2010. SU indicates the rates are not union rates, LA indicates the State of Louisiana; 2004 is the year of the survey; and 007 is an internal number used in producing the wage determination. A 1993 or later date, 5/13/2010, indicates the classifications and rates under that identifier were issued as a General Wage Determination on that date.

Survey wage rates will remain in effect and will not change until a new survey is conducted.

WAGE DETERMINATION APPEALS PROCESS

1.) Has there been an initial decision in the matter? This can be:

* an existing published wage determination
* a survey underlying a wage determination

* a Wage and Hour Division letter setting forth a position on
a wage determination matter
a conformance (additional classification and rate) ruling

On survey related matters, initial contact, including requests for summaries of surveys, should be with the Wage and Hour Regional Office for the area in which the survey was conducted because those Regional Offices have responsibility for the Davis-Bacon survey program. If the response from this initial contact is not satisfactory, then the process described in 2.) and 3.) should be followed.

With regard to any other matter not yet ripe for the formal process described here, initial contact should be with the Branch of Construction Wage Determinations. Write to:

Branch of Construction Wage Determinations
Wage and Hour Division
U.S. Department of Labor
200 Constitution Avenue, N.W.
Washington, DC 20210

2.) If the answer to the question in 1.) is yes, then an interested party (those affected by the action) can request review and reconsideration from the Wage and Hour Administrator (See 29 CFR Part 1.8 and 29 CFR Part 7). Write to:

Wage and Hour Administrator
U.S. Department of Labor
200 Constitution Avenue, N.W.
Washington, DC 20210

The request should be accompanied by a full statement of the interested party's position and by any information (wage payment data, project description, area practice material, etc.) that the requestor considers relevant to the issue.

3.) If the decision of the Administrator is not favorable, an interested party may appeal directly to the Administrative Review Board (formerly the Wage Appeals Board). Write to:

Administrative Review Board
U.S. Department of Labor
200 Constitution Avenue, N.W.
Washington, DC 20210

4.) All decisions by the Administrative Review Board are final.

==========

END OF GENERAL DECISION

11. AGENCY SPECIFIC PROVISIONS:

Note: Failure to comply with these specifications e.g., taking the specified steps prior to Bid opening, and to submit the forms located in Volume 2 with the Bid will lead to the Bid being declared **non-responsive** and, therefore, shall be rejected.

11.1. FHWA Requirements (Contracts via Caltrans)

11.1.1. The Bidders' attention is directed to the provisions in Section 2, "Proposal Requirements and Conditions," of the Caltrans Standard Specifications and and conditions which the bidder must observe in the preparation of and the submission of the bid.

11.1.2. Bidders shall be fully informed with respect to the requirements of the DBE Regulations and take necessary and reasonable steps to ensure that Disadvantaged Business Enterprises (DBEs) have opportunity to participate in the contract.

11.1.3. The Contractors are encouraged to take positive steps to diversify and expand their subcontractor solicitation base and to offer contracting opportunities to all eligible DBE certified Subcontractors. To support its Equal Opportunity Contracting commitment, the City has implemented a race-conscious and race neutral project specific goal methodology required for all Caltrans funded projects.

11.1.4. See the DBE Special Notice for the Subcontracting Participation requirements.

11.1.5. The Bidder's attention is directed to the provisions in Section 5, "Proposal Requirements and Conditions," of the Caltrans Standard Standard Specifications and conditions which the bidder must observe in the preparation of and the submission of the bid.

11.1.6. The Contractor shall complete the following forms and shall submit the forms in accordance with the Caltrans Standard Specifications:

1. Exhibit 15-G2 Local Agency Bidder DBE Information
2. Final Report – Utilization of DBE, First Tier Subcontractors
3. Monthly DBE Trucking Verification
4. Exhibit 15-G1 Local Agency Bidder UDBE Commitment
5. Subcontracting Request
6. Exhibit 15-H UDBE Information-Good Faith Efforts
7. DBE Certification Status Change
8. FHWA PR-1391

12. GOOD FAITH EFFORT DOCUMENTATION SUBMITTALS:

12.1. The affirmative GFE steps documentation shall be submitted **within 4 Working Days of the Bid Opening**. If this documentation is not submitted when due, the City will declare the Bid **non-responsive** and reject it.

12.2. The required documentation shall be submitted and logged in at the following address:

CITY OF SAN DIEGO
PUBLIC WORKS CONTRACTING GROUP
1200 THIRD AVENUE, SUITE 200
SAN DIEGO, CA 92101
SUBJECT: AFFIRMATIVE GOOD FAITH EFFORTS DOCUMENTATION
BID NO. **K-13-4885-DBB-3**

12.3. The Contractor shall maintain the records documenting compliance with requirements including documentation of its GFE and data relied upon in formulating its fair share objectives.

13. ATTACHMENTS:

1.	Attachment A	Local Agency Bidder DBE Information (Construction) (Volume 1)
2.	Attachment B	Final Report – Utilization of DBE, First Tier Subcontractors (Volume 1)
3.	Attachment C	Monthly DBE Trucking Verification (Volume 1)
4.	Attachment D	Local Agency Bidder UDBE Commitment (Construction) (Volume 1)
5.	Attachment E	Subcontracting Request (Volume 1)
6.	Attachment F	UDBE Information-Good Faith Efforts (Volume 1)
7.	Attachment G	DBE Certification Status Change (Volume 1)
8.	Attachment H	FHWA PR-1391 (Volume 1)

EXHIBIT 15-G2 LOCAL AGENCY BIDDER DBE INFORMATION (CONSTRUCTION CONTRACTS)

(Inclusive of all DBEs including the UDBEs listed at bid proposal)

NOTE: PLEASE REFER TO INSTRUCTIONS ON THE REVERSE SIDE OF THIS FORM

LOCAL AGENCY: _____ LOCATION: _____

PROJECT DESCRIPTION: _____

TOTAL CONTRACT AMOUNT: $_____

BID DATE: _____

BIDDER'S NAME: _____

CONTRACT UDBE GOAL: _____

CONTRACT ITEM NO.	ITEM OF WORK AND DESCRIPTION OR SERVICES TO BE SUBCONTRACTED OR MATERIALS TO BE PROVIDED (or contracted if the bidder is a DBE)	DBE CERT NO. AND EXPIRATION DATE	NAME OF EACH DBE (Must be certified on the date bids are opened - include DBE address and phone number)	DOLLAR AMOUNT DBE

For Local Agency to Complete:

Local Agency Contract Number: _____

Federal-aid Project Number: _____

Federal Share: _____

Contract Award Date: _____

Local Agency certifies that all DBE certification have been verified and Information is complete and accurate.

_____ _____ _____

Print Name Signature Date

Local Agency Representative

(Area Code) Telephone Number: _____

Total Claimed DBE Participation

$_____

_____%

_____

Signature of Bidder

_____

Date (Area Code) Tel. No.

_____

Person to Contact (Please Type or Print)

For Caltrans Review:

_____ _____ _____

Print Name Signature Date

Caltrans District Local Assistance Engineer

Local Agency Bidder DBE Information (Construction Contarcts) (Rev 6/26/09)

Distribution:

(1) Copy – Fax or scan a copy to the Caltrans District Local Assistance Engineer (DLAE) within 15 days of contract execution. Failure to send a copy to the DLAE within 15 days of contract execution may result in de-obligation of funds for this project.

(2) Copy – Include in award package to Caltrans District Local Assistance

(3) Original – Local agency files

INSTRUCTIONS - LOCAL AGENCY BIDDER DBE INFORMATION
(CONSTRUCTION CONTRACTS)

SUCCESSFUL BIDDER:

The form requires specific information regarding the construction contract: Local Agency, Location, Project Description, Total Contract Amount, Bid Date, Bidder's Name, and Contract UDBE Goal.

The form has a column for the Contract Item Number and Item of Work and Description or Services to be subcontracted or Materials to be provided by DBEs. Prime contractors shall indicate all work to be performed by DBEs including work performed by its own forces if a DBE. The DBE should provide a certification number to the Contractor and expiration date. Enter DBE prime and subcontractors certification number. The DBE contractors should notify the Contractor in writing with the date of the decertification if their status should change during the course of the contract. The form has a column for the Names of DBE certified contractors to perform the work (must be certified on the date bids are opened and include DBE address and phone number

IMPORTANT: Identify all DBE firms participating in the project--including all UDBEs listed on the UDBE Commitment form (Exhibit 15G1), regardless of tier. Names of the First-Tier DBE Subcontractors and their respective item(s) of work listed should be consistent, where applicable, with the names and items of work in the "List of Subcontractors" submitted with your bid.

There is a column for the total DBE dollar amount. Enter the Total Claimed DBE Participation dollars and percentage amount of items of work submitted with your bid pursuant to the Special Provisions. (If 100% of item is not to be performed or furnished by the DBE, describe exact portion of time to be performed or furnished by the DBE.) See Section "Disadvantaged Business Enterprise (DBE)," of the Special Provisions (construction contracts); to determine how to count the participation of DBE firms.

Exhibit 15-G2 must be signed and dated by the successful bidder. Also list a phone number in the space provided and print the name of the person to contact.

Local agencies should complete the Local Agency Contract Number, Federal-aid Project Number, Federal Share, Contract Award Date fields, and verify that all information is complete and accurate before signing and sending a copy of the form to the District Local Assistance Engineer within 15 days of contract execution. Failure to submit a completed and accurate form within the 15-day time period may result in the de-obligation of funds on this project.

District DBE Coordinator should verify that all information is complete and accurate. Once the information has been verified, the District Local Assistance Engineer signs and dates the form.

STATE OF CALIFORNIA - DEPARTMENT OF TRANSPORTATION

FINAL REPORT-UTILIZATION OF DISADVANTAGED BUSINESS ENTERPRISES (DBE), FIRST-TIER SUBCONTRACTORS

ADA Notice

For individuals with sensory disabilities, this document is available in alternate formats. For information call (916) 654-6410 or TDD (916) 654-3880 or write Records and Forms Management, 1120 N Street, MS-89, Sacramento, CA 95814

CEM-2402F (REV 02/2008)

CONTRACT NUMBER	COUNTY	ROUTE	POST MILES	FEDERAL AID PROJECT NO.	ADMINISTERING AGENCY	CONTRACT COMPLETION DATE
PRIME CONTRACTOR			BUSINESS ADDRESS			ESTIMATED CONTRACT AMOUNT $

ITEM NO.	DESCRIPTION OF WORK PERFORMED AND MATERIAL PROVIDED	COMPANY NAME AND BUSINESS ADDRESS	DBE CERT. NUMBER	CONTRACT PAYMENTS						DATE WORK COMPLETE	DATE OF FINAL PAYMENT
				NON-DBE	DBE	BA UDBE	APA UDBE	NA UDBE	W UDBE		
				$	$	$	$	$	$		
				$	$	$	$	$	$		
				$	$	$	$	$	$		
				$	$	$	$	$	$		
				$	$	$	$	$	$		
				$	$	$	$	$	$		
				$	$	$	$	$	$		
				$	$	$	$	$	$		
				$	$	$	$	$	$		
				$	$	$	$	$	$		
				$	$	$	$	$	$		
				$	$	$	$	$	$		
				$	$	$	$	$	$		
				$	$	$	$	$	$		
			TOTAL	$	$	$	$	$			

ORIGINAL COMMITMENT

$_____

UDBE

BA- Black American
APA- Asian-Pacific Islander
NA-Native American
W-Woman

List all First-Tier Subcontractors, Disadvantaged Business Enterprises (DBEs) and underutilized DBEs (UDBEs) regardless of tier, whether or not the firms were originally listed for goal credit.
If actual UDBE utilization (or item of work) was different than that approved at time of award, provide comments on back of form. List actual amount paid to each entity.

I CERTIFY THAT THE ABOVE INFORMATION IS COMPLETE AND CORRECT

CONTRACTOR REPRESENTATIVE'S SIGNATURE	BUSINESS PHONE NUMBER	DATE

TO THE BEST OF MY INFORMATION AND BELIEF, THE ABOVE INFORMATION IS COMPLETE AND CORRECT

RESIDENT ENGINEER'S SIGNATURE	BUSINESS PHONE NUMBER	DATE

Copy Distribution-Caltrans contracts: **Original** - District Construction; **Copy**- Business Enterprise Program; **Copy**- Contractor; **Copy** Resident Engineer

Copy Distribution-Local Agency contracts: **Original** - District Local Assistance Engineer (submitted with the Report of Expenditure); **Copy**- District Local Assistance Engineer; **Copy**- Local Agency file

The form requires specific information regarding the construction project: Contract Number, County, Route, Post Miles, Federal-aid Project No., the Administering Agency, the Contract Completion Date and the Estimated Contract Amount. It requires the prime contractor name and business address. The focus of the form is to describe who did what by contract item number and descriptions, asking for specific dollar values of item work completed broken down by subcontractors who performed the work both DBE and non-DBE work forces. DBE prime contractors are required to show the date of work performed by their own forces along with the corresponding dollar value of work.

The form has a column to enter the Contract Item No. (or Item No's) and description of work performed or materials provided, as well as a column for the subcontractor name and business address. For those firms who are DBE, there is a column to enter their DBE Certification Number. The DBE should provide their certification number to the contractor and notify the contractor in writing with the date of the decertification if their status should change during the course of the project.

The form has six columns for the dollar value to be entered for the item work performed by the subcontractor.

The Non-DBE column is used to enter the dollar value of work performed for firms who are not certified DBE.

The decision of which column to be used for entering the DBE dollar value is based on what program(s) status the firm is certified. This program status is determined by the California Unified Certification Program by ethnicity, gender, ownership, and control issues at time of certification. To confirm the certification status and program status, access the Department of Transportation Civil Rights web site at: http://www.dot.ca.gov/hq/bep or by calling (916) 324-1700 or the toll free number at (888) 810-6346.

Based on this DBE Program status, the following table depicts which column to be used:

DBE Program Status	Column to be used
If program status shows DBE only with no other programs listed	DBE
If program status shows DBE, Black American	BA UDBE
If program status shows DBE, Asian-Pacific Islander	APA UDBE
If program status shows DBE, Native American	NA UDBE
If program status shows DBE, Woman	W UDBE

If a contractor performing work as a DBE on the project becomes decertified and still performs work after their decertification date, enter the total dollar value performed by this contractor under the appropriate DBE identification column.

If a contractor performing work as a non-DBE on the project becomes certified as a DBE, enter the dollar value of all work performed after certification as a DBE under the appropriate identification column.
Enter the total of each of the six columns in Form CEM-2402(F).

Any changes to DBE certification must also be submitted on Form-CEM 2403(F).

Enter the Date Work Completed as well as the Date of Final Payment (the date when the prime contractor made the “final payment” to the subcontractor for the portion of work listed as being completed).

The contractor and the resident engineer sign and date the form indicating that the information provided is complete and correct.

STATE OF CALIFORNIA · DEPARTMENT OF TRANSPORTATION
MONTHLY DBE/UDBE TRUCKING VERIFICATION
CEM-2404(F) (rev 03/2009)

CONTRACT NO.			MONTH				YEAR	
TRUCKING COMPANY OR OWNER OPERATOR	DBE Cert. No. (if certified)	Company Name and Address Telephone Number	Truck No.	CA No.	Amount paid to DBE and UDBE Truckers	Amount Paid to DBE and UDBE for lease arrangement with non-DBE and UDBE	Date Paid	Transportation Arrangement (√ all that apply)
					$	$		□Lease □ Non-DBE □ DBE □ UDBE
					$	$		□Lease □ Non-DBE □ DBE □ UDBE
					$	$		□Lease □ Non-DBE □ DBE □ UDBE
					$	$		□Lease □ Non-DBE □ DBE □ UDBE
					$	$		□Lease □ Non-DBE □ DBE □ UDBE
					$	$		□Lease □ Non-DBE □ DBE □ UDBE
					$	$		□Lease □ Non-DBE □ DBE □ UDBE
					$	$		□Lease □ Non-DBE □ DBE □ UDBE
					$	$		□Lease □ Non-DBE □ DBE □ UDBE
				TOTAL AMOUNT PAID	$ 0.00	$ 0.00		
PRIME CONTRACTOR			BUSINESS ADDRESS				BUSINESS PHONE NUMBER	

**Upon request all lease agreements must be made available, in accordance with the special provisions.*

I CERTIFY THAT THE ABOVE INFORMATION IS COMPLETE AND CORRECT

CONTRACTOR REPRESENTATIVE'S SIGNATURE	TITLE	DATE

COPY DISTRIBUTION: ORIGINAL – RESIDENT ENGINEER COPY – Civil Rights

For individual with sensory disabilities, this document is available in alternate formats. For information call (916) 654-3880 or

ADA Notice write Records and Forms Management, 1120 N Street, MS-89, Sacramento, CA 95814

INSTRUCTIONS

In the Amount Paid to DBE and UDBE truckers column, the contractor must show the dollar amount paid to:

(1) DBE and UDBE trucking companies using trucks it owns, insures and operates. Include 100 percent of the amount paid to DBE and UDBE for trucking services provided.

(2) DBE and UDBE trucking companies who lease from other UDBE and DBE trucking companies or owner operators. Include 100 percent of the amount paid to DBE and UDBE for trucking services provided.

In the "Amount Paid to DBE/UDBE for lease arrangement with non-DBE/UDBE" column, the contractor must show the dollar amount paid to the DBE and UDBE who leases trucks from non-DBE firms. Include only the amount for the fee or commission received as a result of the lease arrangement.

Both columns should total at the bottom under "Total Amount Paid.
"

In the "Transportation Arrangement" column all that are applicable must be checked.

The prime contractor or its representative must sign, including the individual's title and the date, certifying that the information provided on the form is complete and accurate.

Exhibit 15-G1 Local Agency Bidder UDBE Commitment (Construction Contracts)

NOTE: PLEASE REFER TO INSTRUCTIONS ON THE REVERSE SIDE OF THIS FORM

LOCAL AGENCY: _____ LOCATION: _____

PROJECT DESCRIPTION: _____

TOTAL CONTRACT AMOUNT: $ _____

BID DATE: _____

BIDDER'S NAME: _____

CONTRACT UDBE GOAL**:** _____

CONTRACT ITEM NO.	ITEM OF WORK AND DESCRIPTION OR SERVICES TO BE SUBCONTRACTED OR MATERIALS TO BE PROVIDED (or contracted if the bidder is a UDBE)	UDBE CERT NO. AND EXPIRATION DATE	NAME OF EACH UDBE (Must be certified on the date bids are opened - include UDBE address and phone number**)**	DOLLAR AMOUNT UDBE

For Local Agency to Complete:

Local Agency Contract Number: _____

Federal-aid Project Number: _____

Federal Share: _____

Contract Award Date: _____

Local Agency certifies that all UDBE certifications have been verified and information is complete and accurate.

_____ _____ _____
Print Name Signature Date
Local Agency Representative

(Area Code) Telephone Number: _____

Total Claimed UDBE Participation

$_____

_____%

_____
Signature of Bidder

_____
Date (Area Code) Tel. No.

_____
Person to Contact (Please Type or Print)

Local Agency Bidder UDBE Commitment (Construction Contracts)
(Rev 6/26/09)

Distribution: (1) Original – Local agency files

INSTRUCTIONS - LOCAL AGENCY BIDDER
UDBE COMMITMENT (CONSTRUCTION CONTRACTS)

ALL BIDDERS:

PLEASE NOTE: It is the bidder's responsibility to verify that the UDBE(s) falls into one of the following groups in order to count towards the UDBE contract goal: 1) African Americans; 2) Asian-Pacific Americans; 3) Native Americans; 4) Women. This information may be submitted with your bid. If it is not, and you are the apparent low bidder or the second or third low bidder, it must submitted and received as specified in the Special Provisions. Failure to submit the required UDBE commitment will be grounds for finding the bid non-responsive

A UDBE is a firm meeting the definition of a DBE as specified in 49 CFR and is one of the following groups: African Americans, Asian-Pacific Americans, Native Americans, or Women.

The form requires specific information regarding the construction contract: Local Agency, Location, Project Description, Total Contract Amount, Bid Date, Bidder's Name, and Contract UDBE Goal.

The form has a column for the Contract Item Number and Item of Work and Description or Services to be Subcontracted or Materials to be provided by UDBEs. Prime contractors shall indicate all work to be performed by UDBEs including, if the prime is a UDBE, work performed by its own forces, if a UDBE. The UDBE shall provide a certification number to the Contractor and expiration date. Enter the UDBE prime's and subcontractors' certification numbers. The form has a column for the Names of UDBE contractors to perform the work (who must be certified on the date bids are opened and include the UDBE address and phone number).

IMPORTANT: Identify all UDBE firms participating in the project regardless of tier. Names of the First-Tier UDBE Subcontractors and their respective item(s) of work listed should be consistent, where applicable, with the names and items of work in the "List of Subcontractors" submitted with your bid.

There is a column for the UDBE participation dollar amount. Enter the Total Claimed UDBE Participation dollars and percentage amount of items of work submitted with your bid pursuant to the Special Provisions. (If 100% of item is not to be performed or furnished by the UDBE, describe exact portion of time to be performed or furnished by the UDBE.) See Section "Disadvantaged Business Enterprise (DBE)," of the Special Provisions (construction contracts), to determine how to count the participation of UDBE firms.

Exhibit 15-G1 must be signed and dated by the person bidding. Also list a phone number in the space provided and print the name of the person to contact.

Local agencies should complete the Local Agency Contract Award, Federal-aid Project Number, Federal Share, Contract Award Date fields and verify that all information is complete and accurate before signing and filing.

STATE OF CALIFORNIA - DEPARTMENT OF TRANSPORTATION FRONT

SUBCONTRACTING REQUEST

DC-CEM-1201 (REV. 4/94) (OLD HC-45) CT# 7541-3514-7

See Instructions On Back

REQUEST NUMBER

CONTRACTOR NAME	**COUNTY**	**ROUTE**

BUSINESS ADDRESS	**CONTRACT NO.**

CITY/STATE	**ZIP CODE**	**FEDERAL AID PROJECT NO. (From Special Provisions)**

SUBCONTRACTOR (Name, Business Address, Phone)	**BID ITEM NUMBER(S)**	**% OF BID ITEM SUBBED**	**CHECK IF: (See Categories Below)** (1)	(2)	(3)	**DESCRIBE WORK WHEN LESS THAN 100% OF WORK IS SUBBED**	**$ AMOUNT BASED ON BID $ AMOUNT**

Categories: 1) Specialty 2) Listed Under Fair Practices Act 3) Certified DBE

I Certify That:

- The Standard Provisions for labor set forth in the contract apply to the subcontracted work.
- If applicable, (Federal Aid Projects only) Section 14 (Federal Requirements) of the Special Provisions have been inserted in the subcontracts and shall be incorporated in any lower-tier subcontract. Written contracts have been executed for the above noted subcontracted work.

CONTRACTOR'S SIGNATURE	**DATE**

NOTE: This section is to be completed by the Resident Engineer

1. Total of bid items ..... $ _____
2. Specialty items (previously requested) ..... $ _____
3. Specialty items (this request) ..... $ _____
4. Total (lines 2+3) ..... $ _____
5. Contractor must perform with own forces (lines 1 minus 4) x _____ % ..... $ _____
6. Bid items previously subcontracted ..... $ _____
7. Bid items subcontracted (this request) ..... $ _____
8. Total (lines 6+7) ..... $ _____
9. Balance of work Contractor to perform (lines 1 minus 8) ..... $ _____ $ _____

APPROVED

RESIDENT ENGINEER'S SIGNATURE	DATE

CEM-1201 (HC-46 REV. 4/94) COPY DISTRIBUTION:

1. Original - Contractor
2. Copy - local agency Resident Engineer
3. Copy - local agency Labor Compliance Officer
4. Contractor's Information Copy

INSTRUCTIONS FOR COMPLETING SUBCONTRACTING REQUEST FORM

All First-tier subcontractors must be included on a subcontracting request.

Submit in accordance with Section 8-1.01 of the Standard Specifications. Type or print requested information. Information copy is to be retained by the contractor. Submit other copies to project's Resident Engineer. After approval, the original will be returned to the contractor.

When an entire item is subcontracted, the value to be shown is the contractor's bid price.

When a portion of an item is subcontracted, describe the portion, and show the % of bid item and value.

THIS FORM IS NOT TO BE USED FOR SUBSTITUTIONS.

Prior to submittal of a DC-CEM-1201 involving a replacement Subcontractor, submit a separate written request for approval to substitute a listed subcontractor. Section 4107 of the Government Code covers the conditions for substitution.

NOTE: For contractors who will be performing work on railroad property, it is necessary for the contractor to complete and submit the Certificate of Insurance (State Form DH-OS-A10A) naming the subcontractor as insured. *No work shall be allowed which involves encroachment on railroad property until the specified insurance has been approved.*

EXHIBIT 15-H UDBE INFORMATION — GOOD FAITH EFFORTS

Federal-aid Project No. **HPLU 5004(168)** Bid Opening Date:_____

The City of San Diego established an Underutilized Disadvantaged Business Enterprise (UDBE) goal of **6.6**% for this project. The information provided herein shows that a good faith effort was made.

Lowest, second lowest and third lowest bidders shall submit the following information to document adequate good faith efforts. Bidders should submit the following information even if the "Local Agency Bidder UDBE Commitment" form indicates that the bidder has met the UDBE goal. This will protect the bidder's eligibility for award of the contract if the administering agency determines that the bidder failed to meet the goal for various reasons, e.g., a UDBE firm was not certified at bid opening, or the bidder made a mathematical error.

Submittal of only the "Local Agency Bidder UDBE Commitment" form may not provide sufficient documentation to demonstrate that adequate good faith efforts were made.

The following items are listed in the Section entitled "Submission of UDBE Commitment" of the Special Provisions:

A. The names and dates of each publication in which a request for UDBE participation for this project was placed by the bidder (please attach copies of advertisements or proofs of publication):

Publications	Date of Advertisement

B. The names and dates of written notices sent to certified UDBEs soliciting bids for this project and the dates and methods used for following up initial solicitations to determine with certainty whether the UDBEs were interested (please attach copies of solicitations, telephone records, fax confirmations, etc.):

Names of UDBEs Solicited	Date of Initial Solicitation	Follow Up Methods and Dates

C. The items of work which the bidder made available to UDBE firms including, where appropriate, any breaking down of the contract work items (including those items normally performed by the bidder with its own forces) into economically feasible units to facilitate UDBE participation. It is the bidder's responsibility to demonstrate that sufficient work to facilitate UDBE participation was made available to UDBE firms.

Items of Work	Bidder Normally Performs Item (Y/N)	Breakdown of Items	Amount($)	PercentageOf Contract

D. The names, addresses and phone numbers of rejected UDBE firms, the reasons for the bidder's rejection of the UDBEs, the firms selected for that work (please attach copies of quotes from the firms involved), and the price difference for each UDBE if the selected firm is not a UDBE:

Names, addresses and phone numbers of rejected UDBEs and the reasons for the bidder's rejection of the UDBEs:

Names, addresses and phone numbers of firms selected for the work above:

E. Efforts made to assist interested UDBEs in obtaining bonding, lines of credit or insurance, and any technical assistance or information related to the plans, specifications and requirements for the work which was provided to UDBEs

F. Efforts made to assist interested UDBEs in obtaining necessary equipment, supplies, materials or related assistance or services, excluding supplies and equipment the UDBE subcontractor purchases or leases from the prime contractor or its affiliate:

G. The names of agencies, organizations or groups contacted to provide assistance in contacting, recruiting and using UDBE firms (please attach copies of requests to agencies and any responses received, i.e., lists, Internet page download, etc.):

Name of Agency/Organization	Method/Date of Contact	Results

H. Any additional data to support a demonstration of good faith efforts (use additional sheets if necessary):

NOTE: USE ADDITIONAL SHEETS OF PAPER IF NECESSARY.

STATE OF CALIFORNIA – DEPARTMENT OF TRANSPORTATION

DISADVANTAGED BUSINESS ENTERPRISES (DBE) CERTIFICATION STATUS CHANGE

CP-CEM-2403(F) (New. 10/99)

CONTACT NUMBER	COUNTY	ROUTE	POST MILES	ADMINISTERING AGENCY	CONTRACT COMPLETION DATE
PRIME CONTRACTOR			BUSINESS ADDRESS		ESTIMATED CONTRACT AMOUNT

Prime Contractor: List all DBEs with changes in certification status (certified/decertified) while in your employ, whether or not firms were originally listed for good credit.

Attach DBE certification/Decertification letter in accordance with the Special Provisions

CONTRACT ITEM NO.	SUBCONTRACT NAME AND BUSINESS ADDRESS	BUSINESS PHONE	CERTIFICATION NUMBER	AMOUNT PAID WHILE CERTIFIED	CERTIFICATION/ DECERTIFICATION DATE Letter attached
				$	
				$	
				$	
				$	
				$	
				$	
				$	
				$	
				$	

Comments:

I CERTIFY THAT THE ABOVE INFORMATION IS COMPLETE AND CORRECT

CONTRACTOR REPRESENTATIVE SIGNATURE	TITLE	BUSINESS PHONE NUMBER	DATE

TO THE BEST OF MY KNOWLEDGE, THE ABOVE INFORMATION IS COMPLETE AND CORRECT

RESIDENT ENGINEER	BUSINESS PHONE NUMBER	DATE

Distribution: Original copy - DLAE

Copy: 1) Business Enterprise Program
2) Prime Contactor
3) Local Agency
4) Resident Engineer

Form CP-CEM 2403(F) (New 10/99)
DISADVANTAGED BUSINESS ENTERPRISES (DBE) CHANGE IN CERTIFICATION STATUS REPORT

The top of the form requires specific information regarding the construction project: Contract Number, County, Route, Post Miles, the Administering Agency, the Contract Completion Date, and the Estimated Contract Amount. It requires the Prime Contractor's name and Business Address. The focus of the form is to substantiate and verify the actual DBE dollar amount paid to contractors on federally funded projects that had a changed in Certification status during the course of the completion of the contract. The two situations that are being addressed by CP-CEM 2403(F) are, if a firm certified as a DBE and doing work on the contract during the course of the project becomes Decertified, and if a non-DBE firm doing work on the contract during the course of the project becomes Certified as a DBE.

The form has a column to enter the Contract Item No (or Item Nos.) as well as a column for the Subcontractor's Name, Business Address, Business Phone, and contractor's Certification Number.

The column entitled Amount Paid While Certified will be used to enter the actual dollar value of the work performed by those contractors who meet the conditions as outlined above during the time period they are certified as a DBE. This column on the CP-CEM-2403(F) should only reflect the dollar value of work performed while the firm was certified as a DBE.

The column called Certification/Decertification Date (Letter attached) will reflect either the date of the Decertification Letter sent out by the Civil Rights Program or the date of the Certification Certificate mailed out by the Civil Rights Program. There is a box to check that support documentation is attached to the CP-CEM-2403 (F) form.

There is a Comments section for any additional information that may need to be provided regarding any of the above transactions.

The CEM-2403(F) has an area at the bottom where the Contractor and the Resident Engineer sign and date that the information provided is complete and correct.

There is a Comments section for any additional information that may need to be provided regarding any of the above transactions.

The CEM-2403(F) has an area at the bottom where the Contractor and the Resident Engineer sign and date that the information provided is complete and correct.

FEDERAL-AID HIGHWAY CONSTRUCTION CONTRACTORS ANNUAL EEO REPORT

1. MARK APPROPRIATE BOX	2. COMPANY NAME, CITY, STATE	3. PROJECT NUMBER:	4. DOLLAR AMOUNT OF CONTRACT	5. PROJECT LOCATION (County and State)
☐ Contractor ☐ Subcontractor				

This collection of information is required by law and regulation 23 U.S.C. 140a and 23 CFR Part 230. The OMB control number for this collection is 2125-0019 expiring in March, 2013

6. WORKFORCE ON FEDERAL-AID AND CONSTRUCTION SITE(S) DURING LAST FULL PAY PERIOD ENDING IN JULY 20 (INSERT YEAR)

TABLE A																		TABLE B			
JOB CATEGORIES	TOTAL EMPLOYED		TOTAL/RACIAL/ ETHNIC MINORITY		BLACK OR AFRICAN AMERICAN		HISPANIC OR LATINO		AMERICAN INDIAN OR ALASKA NATIVE		ASIAN		NATIVE HAWAIIAN OR OTHER PACIFIC ISLANDER		TWO OR MORE RACES		WHITE		APPRENTICES		ON THE JOB TRAINEES	
	M	F	M	F	M	F	M	F	M	F	M	F	M	F	M	F	M	F	M	F	M	F
OFFICIALS																						
SUPERVISORS																						
FOREMEN/WOMEN																						
CLERICAL																						
EQUIPMENT OPERATORS																						
MECHANICS																						
TRUCK DRIVERS																						
IRONWORKERS																						
CARPENTERS																						
CEMENT MASONS																						
ELECTRICIANS																						
PIPEFITTER/PLUMBERS																						
PAINTERS																						
LABORERS-SEMI SKILLED																						
LABORERS-UNSKILLED																						
TOTAL																						

TABLE C (Table B data by racial status)																				
APPRENTICES																				
OJT TRAINEES																				

8. PREPARED BY: (Signature and Title of Contractors Representative)	9. DATE	10. REVIEWED BY (Signature and Title of State Highway Official)	11. DATE

Form FHWA-1391 (Rev. 06-10) **PREVIOUS EDITIONS ARE OBSOLETE**

LOCAL AGENCY NOTIFICATION TO CONTRACTOR

INSTRUCTIONS FOR COMPLETING
FEDERAL HIGHWAY ADMINSITRATION (FHWA) PR-1391 FORM

The FHWA PR-1391 form shall be used to report the number of minority and non-minority employees by gender employed in each work classification on a Federal-aid contract. The "Job Categories" column is used to identify work classification. When identifying work classifications use only the categories listed on the form. Miscellaneous job categories are to be incorporated in the most appropriate category listed on the form.

WHO MUST REPORT:

Each prime contractor and subcontractor regardless of tier who has a Federal-aid contract exceeding $10,000 must report.

REPORT DATA:

Each contractor is to collect data of the number of project personnel who worked all or any part of the last full week of July. Contractors who do not perform any work during the last full week of July must write "Not Applicable" across the form, sign, date and return.

DUE DATE:

Due on or before the 12th of August to the Local Agency Resident Engineer. The Local Agency Resident Engineer must submit the report to the District Local Assistance Engineer by August 26th.

DEFINITION OF TERMS:

OFFICIALS (Managers): Officers, project engineers, superintendents, etc., who have management-level responsibility and authority.

SUPERVISORS: All levels for project supervision, if any, between management and foremen levels.

FOREMEN/WOMEN: Men and women in direct charge of crafts workers and laborers performing work on the project.

MECHANICS: Equipment service and maintenance personnel.

LABORERS, SEMI-SKILLED: All laborers classified by specialized type of work.

LABORERS, UNSKILLED: All non-classified laborers.

OTHERS: Miscellaneous job classifications are to be incorporated in the most appropriate category listed on the form. All employees on the project should be accounted for.

BLOCK ENTRIES

- CHECK APPROPRIATE BLOCK – Check only one box.

  - COMPANY NAME, CITY, STATE – Enter the firm's name, city or town, and state. Do not abbreviate.

(3) PROJECT NUMBER – Enter all Federal-aid project number(s) associated with the contract number. (If you are a subcontractor and do not know the Federal-aid project number, contact the prime contractor).

(4) DOLLAR AMOUNT OF CONTRACT – Enter dollar amount of contract, including amended amounts.

I. PROJECT LOCATION – Enter all county(ies) and state(s) associated with the contract number. (If you are a subcontractor and do not know the county(ies) and state(s), contact the prime contractor).

II. WORKFORCE ON FEDERAL-AID AND CONSTRUCTION SITE(S) DURING LAST FULL PAY PERIOD ENDING IN JULY 20__ (INSERT YEAR) – Enter the last two digits of the calendar year you are reporting data for.

TABLE A – Enter number of employee(s) based on race, gender and job category during the reporting period.

TABLE B – Enter number of apprentice(s) and on-the-job trainee(s) based on gender and job category during the reporting period.

TABLE C – enter number of apprentice(s) and on-the-job trainee(s) based on race and gender during the reporting period.

1. PREPARED BY – Signature and Title of Contractor's Representative certifying the reported data to be true.

2. DATE – Enter the date the Contractor's Representative signed this form.

3. REVIEWED BY – Signature and Title of Local Agency Official reviewing data.

4. DATE – Enter the date the Local Agency Official signed this form.

CONSTRUCTION CONTRACT

This contract is made and entered into between THE CITY OF SAN DIEGO, a municipal corporation, herein called "City", and KTA CONSTRUCTION, INC., herein called "Contractor" for construction of **Ted Williams Parkway Pedestrain Overcrossing at Shoal Creek Drive;** Bid No. **K-13-4885-DBB-3,** the amount of TWO MILLION FOUR HUNDRED EIGHTY NINE THOUSAND SEVENTY FIVE DOLLARS AND 00/100 ($2,489,075.00), which is comprised of the Base Bid alone.

IN CONSIDERATION of the payments to be made hereunder and the mutual undertakings of the parties hereto, City and Contractor agree as follows:

1. The following are incorporated into this contract as though fully set forth herein:

   (a) The attached Faithful Performance and Payment Bonds.
   (b) The attached Proposal included in the Bid documents by the Contractor.
   (c) That certain documents entitled **Ted Williams Parkway Pedestrain Overcrossing at Shoal Creek Drive,** on file in the office of the City Clerk as Document No. **S-00941**, as well as all matters referenced therein.

2. Contractor shall perform and be bound by all the terms and conditions of this contract and in strict conformity therewith shall perform and complete in a good and workmanlike manner **Ted Williams Parkway Pedestrain Overcrossing at Shoal Creek Drive**; Bid No. **K-13-4885-DBB-3**, San Diego, California.

3. For such performances, the City shall pay to Contractor the amounts set forth at the times and in the manner and with such additions or deductions as are provided for in this contract, and Contractor shall accept such payment in full satisfaction of all claims incident to such performances.

4. No claim or suit whatsoever shall be made or brought by Contractor against any officer, agent, or employee of the City for or on account of anything done or omitted to be done in connection with this contract, nor shall any such officer, agent, or employee be liable hereunder.

5. This contract is effective as of the date that the Mayor or designee signs the agreement.

CONTRACT FORMS (continued)
AGREEMENT

IN WITNESS WHEREOF, this agreement is signed by the City of San Diego, acting by and through its Mayor or designee, pursuant to Resolution No. R - **307627** authorizing such execution.

THE CITY OF SAN DIEGO

By Tony Heinrichs

Print Name: Tony Heinrichs
Director, Public Works

Date: Jan 30, 2013

APPROVED AS TO FORM AND LEGALITY

Jan I. Goldsmith, City Attorney

By

Print Name: Ryan Kohut
Deputy City Attorney

Date: 1/31/2013

CONTRACTOR

By

Print Name: Paul M. Harrison

Title: President

Date: 9-27-2012

City of San Diego License No.: B 19950073 94

State Contractor's License No.: 395234

CONTRACT FORMS (continued)
PERFORMANCE BOND AND LABOR AND MATERIALMEN'S BOND

FAITHFUL PERFORMANCE BOND AND LABOR AND MATERIALMEN'S BOND:

KTA CONSTRUCTION, INC., a corporation, as principal, and The Guarantee Company of North America USA, a corporation authorized to do business in the State of California, as Surety, hereby obligate themselves, their successors and assigns, jointly and severally, to The City of San Diego a municipal corporation in the sum of TWO MILLION FOUR HUNDRED EIGHTY NINE THOUSAND SEVENTY FIVE DOLLARS AND 00/100 ($2,489,075.00) for the faithful performance of the annexed contract, and in the sum of TWO MILLION FOUR HUNDRED EIGHTY NINE THOUSAND SEVENTY FIVE DOLLARS AND 00/100 ($2,489,075.00) for the benefit of laborers and materialmen designated below.

Conditions:

If the Principal shall faithfully perform the annexed contract **Ted Williams Parkway Pedestrain Overcrossing at Shoal Creek Drive;** Bid No. **K-13-4885-DBB-3,** San Diego, California then the obligation herein with respect to a faithful performance shall be void; otherwise it shall remain in full force.

If the Principal shall promptly pay all persons, firms and corporations furnishing materials for or performing labor in the execution of this contract, and shall pay all amounts due under the California Unemployment Insurance Act then the obligation herein with respect to laborers and materialmen shall be void; otherwise it shall remain in full force.

The obligation herein with respect to laborers and materialmen shall inure to the benefit of all persons, firms and corporations entitled to file claims under the provisions of Chapter 3 of Division 5 of Title I of the Government Code of the State of California or under the provisions of Section 3082 et seq. of the Civil Code of the State of California.

Changes in the terms of the annexed contract or specifications accompanying same or referred to therein shall not affect the Surety's obligation on this bond, and the Surety hereby waives notice of same.

CONTRACT FORMS (continued)
PERFORMANCE BOND AND LABOR AND MATERIALMEN'S BOND

The Surety shall pay reasonable attorney's fees should suit be brought to enforce the provisions of this bond.

Dated September 18th, 2012

Approved as to Form and Legality

Jan I. Goldsmith, City Attorney

By _____
Deputy City Attorney

Approved:

_____
Tony Heinrichs
Director, Public Works

KTA Construction, Inc.
Principal

By _____

PAUL M. HENDERSON
Printed Name of Person Signing for Principal

The Guarantee Company of North America USA
Surety

By _____
Sarah Myers, Attorney-in-fact

1800 Sutter Street, Suite 880
Local Address of Surety

Concord, CA 94520
Local Address (City, State) of Surety

(866) 364-6378
Local Telephone No. of Surety

Premium $21,913.00

Bond No. 12090044

PREMIUM IS FOR CONTRACT TERM AND IS SUBJECT TO ADJUSTMENT BASED ON THE FINAL CONTRACT PRICE.

CALIFORNIA ALL-PURPOSE ACKNOWLEDGMENT

STATE OF CALIFORNIA

County of San Diego }

On SEP 18 2012 (Date) before me, Jennifer L. Cox (Insert Name of Notary exactly as it appears on the official seal), Notary Public,

personally appeared Sarah Myers (Name(s) of Signer(s)),

who proved to me on the basis of satisfactory evidence to be the person(s) whose name(s) is/are subscribed to the within instrument and acknowledged to me that he/she/they executed the same in his/her/their authorized capacity(ies), and that by his/her/their signature(s) on the instrument the person(s), or the entity upon behalf of which the person(s) acted, executed the instrument.

I certify under PENALTY OF PERJURY under the laws of the State of California that the foregoing paragraph is true and correct.

Witness my hand and official seal.

Signature _____ (Signature of Notary Public) Jennifer L. Cox

JENNIFER L COX
Commission # 1915197
Notary Public - California
San Diego County
My Comm. Expires Dec 4, 2014

Place Notary Seal Above

OPTIONAL

Though the information below is not required by law, it may prove valuable to persons relying on the document and could prevent fraudulent removal and reattachment of the form to another document.

Description of Attached Document

Title or Type of Document: _____

Document Date: _____ Number of Pages: _____

Signer(s) Other Than Named Above: _____

Capacity(ies) Claimed by Signer(s)

Signer's Name: _____

- ☐ Individual
- ☐ Corporate Officer — Title(s): _____
- ☐ Partner ☐ Limited ☐ General
- ☑ Attorney in Fact
- ☐ Trustee
- ☐ Guardian or Conservator
- ☐ Other: _____

Signer is Representing:

RIGHT THUMBPRINT OF SIGNER
Top of thumb here

Signer's Name: _____

- ☐ Individual
- ☐ Corporate Officer — Title(s): _____
- ☐ Partner ☐ Limited ☐ General
- ☐ Attorney in Fact
- ☐ Trustee
- ☐ Guardian or Conservator
- ☐ Other: _____

Signer is Representing:

RIGHT THUMBPRINT OF SIGNER
Top of thumb here

THE GUARANTEE COMPANY OF NORTH AMERICA USA

Southfield, Michigan

POWER OF ATTORNEY

KNOW ALL BY THESE PRESENTS: That **THE GUARANTEE COMPANY OF NORTH AMERICA USA**, a corporation organized and existing under the laws of the State of Michigan, having its principal office in Southfield, Michigan, does hereby constitute and appoint

Lawrence F. McMahon, Maria Vhanneza Guise, Sarah Myers, Charlotte Aquino
Alliant Insurance Services, Inc.

its true and lawful attorney(s)-in-fact to execute, seal and deliver for and on its behalf as surety, any and all bonds and undertakings, contracts of indemnity and other writings obligatory in the nature thereof, which are or may be allowed, required or permitted by law, statute, rule, regulation, contract or otherwise.

The execution of such instrument(s) in pursuance of these presents, shall be as binding upon **THE GUARANTEE COMPANY OF NORTH AMERICA USA** as fully and amply, to all intents and purposes, as if the same had been duly executed and acknowledged by its regularly elected officers at the principal office.

The Power of Attorney is executed and may be certified so, and may be revoked, pursuant to and by authority of Article IX, Section 9.03 of the By-Laws adopted by the Board of Directors of **THE GUARANTEE COMPANY OF NORTH AMERICA USA** at a meeting held on the 31st day of December, 2003. The President, or any Vice President, acting with any Secretary or Assistant Secretary, shall have power and authority:

1. To appoint Attorney(s)-in-fact, and to authorize them to execute on behalf of the Company, and attach the Seal of the Company thereto, bonds and undertakings, contracts of indemnity and other writings obligatory in the nature thereof; and

2. To revoke, at any time, any such Attorney-in-fact and revoke the authority given, except as provided below

3. In connection with obligations in favor of the Kentucky Department of Highways only, it is agreed that the power and authority hereby given to the Attorney-in-Fact cannot be modified or revoked unless prior written personal notice of such intent has been given to the Commissioner – Department of Highways of the Commonwealth of Kentucky at least thirty (30) days prior to the modification or revocation.

Further, this Power of Attorney is signed and sealed by facsimile pursuant to resolution of the Board of Directors of the Company adopted at a meeting duly called and held on the 31st day of December 2003, of which the following is a true excerpt:

RESOLVED that the signature of any authorized officer and the seal of the Company may be affixed by facsimile to any Power of Attorney or certification thereof authorizing the execution and delivery of any bond, undertaking, contracts of indemnity and other writings obligatory in the nature thereof, and such signature and seal when so used shall have the same force and effect as though manually affixed.

IN WITNESS WHEREOF, **THE GUARANTEE COMPANY OF NORTH AMERICA USA** has caused this instrument to be signed and its corporate seal to be affixed by its authorized officer, this 18th day of January, 2011.

THE GUARANTEE COMPANY OF NORTH AMERICA USA

Stephen C. Ruschak, Vice President

Randall Musselman, Secretary

STATE OF MICHIGAN
County of Oakland

On this 18th day of January, 2011 before me came the individuals who executed the preceding instrument, to me personally known, and being by me duly sworn, said that each is the herein described and authorized officer of The Guarantee Company of North America USA; that the seal affixed to said instrument is the Corporate Seal of said Company; that the Corporate Seal and each signature were duly affixed by order of the Board of Directors of said Company.

Cynthia A. Takai
Notary Public, State of Michigan
County of Oakland
My Commission Expires February 27, 2012
Acting in Oakland County

IN WITNESS WHEREOF, I have hereunto set my hand at The Guarantee Company of North America USA offices the day and year above written.

Cynthia A. Takai

I, Randall Musselman, Secretary of **THE GUARANTEE COMPANY OF NORTH AMERICA USA**, do hereby certify that the above and foregoing is a true and correct copy of a Power of Attorney executed by **THE GUARANTEE COMPANY OF NORTH AMERICA USA**, which is still in full force and effect.

IN WITNESS WHEREOF, I have thereunto set my hand and attached the seal of said Company this day of SEP 18 2012

Randall Musselman, Secretary

CALIFORNIA ALL-PURPOSE ACKNOWLEDGMENT

State of California
County of San Diego }

On 9/15/12 (Date) before me, Jessica Anderson Notary Public (Here Insert Name and Title of the Officer),

personally appeared Paul M. Henderson (Name(s) of Signer(s))

who proved to me on the basis of satisfactory evidence to be the person(~~s~~) whose name(~~s~~) is/~~are~~ subscribed to the within instrument and acknowledged to me that he/~~she/they~~ executed the same in his/~~her/their~~ authorized capacity(~~ies~~), and that by his/~~her/their~~ signature(~~s~~) on the instrument the person(~~s~~), or the entity upon behalf of which the person(~~s~~) acted, executed the instrument.

I certify under PENALTY OF PERJURY under the laws of the State of California that the foregoing paragraph is true and correct.

WITNESS my hand and official seal.

Signature Jessica Anderson (Signature of Notary Public)

JESSICA ANDERSON
Commission # 1986476
Notary Public - California
San Diego County
My Comm. Expires Jul 28, 2016

Place Notary Seal Above

OPTIONAL

Though the information below is not required by law, it may prove valuable to persons relying on the document and could prevent fraudulent removal and reattachment of this form to another document.

Description of Attached Document

Title or Type of Document: _____

Document Date: _____ Number of Pages: _____

Signer(s) Other Than Named Above: _____

Capacity(ies) Claimed by Signer(s)

Signer's Name: _____
☐ Individual
☐ Corporate Officer — Title(s): _____
☐ Partner — ☐ Limited ☐ General
☐ Attorney in Fact
☐ Trustee
☐ Guardian or Conservator
☐ Other: _____
Signer Is Representing: _____

RIGHT THUMBPRINT OF SIGNER
Top of thumb here

Signer's Name: _____
☐ Individual
☐ Corporate Officer — Title(s): _____
☐ Partner — ☐ Limited ☐ General
☐ Attorney in Fact
☐ Trustee
☐ Guardian or Conservator
☐ Other: _____
Signer Is Representing: _____

RIGHT THUMBPRINT OF SIGNER
Top of thumb here

©2007 National Notary Association • 9350 De Soto Ave., P.O. Box 2402 • Chatsworth, CA 91313-2402 • www.NationalNotary.org Item #5907 Reorder: Call Toll-Free 1-800-876-6827

CERTIFICATE OF INSURANCE

Description of Contract: City of San Diego - CONSTRUCTION OF **Ted Williams Parkway Pedestrain Overcrossing at Shoal Creek Drive**

Type of Insurance: Workers' Compensation Insurance

THIS IS TO CERTIFY that the following policy has been issued by the below stated company in conformance with the requirements of Section 7-1.12B (1)(a) "Workers' Compensation", of the Caltrans Standard Specifications and is in force at this time.

The Company will give at least thirty (30) days written notice by certified mail to the City and Consulting Engineer prior to any material change or cancellation of said policy.

POLICY NUMBER	EXPIRATION DATE	LIMITS OF LIABILITY
4600828 60103	01/01/2013	Statutory Limits Under the laws of the State of California

KTA CONSTRUCTION INC.
Name Insured (Contractor)

1920 Commercial Ct. #105
Street Number

El Cajon, Ca. 92020
City and State

California Insurance Co.
Insured Company

10825 Old Mill Road
Street Number

Omaha NE
City and State

Jessica Wieler
Company Representative

State of _____)
)
County of _____)

(SEE NOTICE ON NEXT PAGE) ** See Attachment

On this ____ day of _____ 20___, before me personally came _____ to me known, who being duly sworn, did depose and say: That _____ is an authorized representative of the _____ acknowledged to me that _____ executed the within instrument on _____ behalf of said insurance company.

IN WITNESS WHEREOF, I have signed and affixed my official seal on the date in this certificate first above written.

_____
Notary Public

Certificate of Insurance
(Workers' Compensation) - 1 of 2

CERTIFICATE OF INSURANCE

Description of Contract: City of San Diego - CONSTRUCTION OF Ted Williams Parkway Pedestrain Overcrossing at Shoal Creek Drive

Type of Insurance: Liability Insurance

THIS IS TO CERTIFY that the following policies have been issued to the below stated company in conformance with the requirements of Section 7-1.12 of the Standard Specifications and are in force at this time:

		Limits of Liability	
POLICY EXPIRATION		In Thousands (000)	
NUMBER	DATE	Each Occurrence	Aggregate
A.	GENERAL LIABILITY		
	Bodily Injury	$ _____	_____
	Property Damage	$ _____	_____
	Bodily Injury and Property Damage Combined	$ _____	_____
	Personal Injury	$ _____	_____
B.	AUTOMOBILE LIABILITY		
	Bodily Injury (Each Person)	$ _____	_____
	Bodily Injury (Each Occurrence)	$ _____	_____
	Bodily Injury and Property Damage Combined	$ _____	1,000,000
C.	EXCESS LIABILITY		
	Bodily Injury and Property Damage Combined	$ _____	_____

Insurance Company Agent for Service of Process in California:

Osmar Espinoza	Hoffman Hanono & Sus.
Name	Agency
222 Third Avenue	
Street Number	Street Number
Chula Vista CA	
City and State	City and State
(619) 420-1861	
Telephone No.	Telephone No.

This certificate or verification of insurance is not an insurance policy and does not amend, extend, or alter the coverage afforded by the policies listed herein. Notwithstanding any requirements, term, or condition of any contract or other document with respect to which this certificate or verification of insurance may be issued or may pertain, the insurance afforded by the policies.

NOTICE:

No substitution or revision to the above certificate form will be accepted. If the insurance called for is provided by more than one insurance company, a separate certificate in the exact above form shall be provided for each insurance company.

Insurers must be authorized to do business and have an agent for service of process in California and have an "A-" policyholder's rating and financial rating of at least Class VII in accordance with the most current Best's Rating.

Certificate of Insurance
(Workers' Compensation)- 2 of 2

ACKNOWLEDGMENT

STATE OF CALIFORNIA)
) SS.
COUNTY OF SAN DIEGO)

On September 28, 2012, before me, Arianely E. San Martin, a Notary Public in and for the State of California, personally appeared Osmar Espinoza, who proved to me on the basis of satisfactory evidence to be the person whose name is subscribed to the within instrument and acknowledged to me that he executed the same in his authorized capacity, and that by his signature on the instrument the person, or the entity upon behalf of which the person acted, executed the instrument.

I certify under PENALTY OF PERJURY under the laws of the State of California that the foregoing paragraph is true and correct.

WITNESS my hand and official seal.

ARIANELY E. SAN MARTIN
COMM. # 1915475
NOTARY PUBLIC - CALIFORNIA
SAN DIEGO COUNTY
COMM. EXPIRES DEC. 6, 2014

Notary Public

CERTIFICATE OF INSURANCE

Description of Contract: City of San Diego - CONSTRUCTION OF **Ted Williams Parkway Pedestrain Overcrossing at Shoal Creek Drive**

Type of Insurance: Liability Insurance

THIS IS TO CERTIFY that the following policies have been issued to the below stated company in conformance with the requirements of Section 7-1.12 of the Standard Specifications and are in force at this time:

		Limits of Liability	
POLICY EXPIRATION 5/4/13		In Thousands (000)	
NUMBER	DATE	Each Occurrence	Aggregate
A. GENERAL LIABILITY			
Bodily Injury		$ 1,000,000	2,000,000
Property Damage		$ 1,000,000	2,000,000
Bodily Injury and Property Damage Combined		$ 1,000,000	2,000,000
Personal Injury		$ 1,000,000	2,000,000
B. AUTOMOBILE LIABILITY			
Bodily Injury (Each Person)		$ N/A	
Bodily Injury (Each Occurrence)		$	
Bodily Injury and Property Damage Combined		$	
C. EXCESS LIABILITY	5/4/13		
Bodily Injury and Property Damage Combined		$ 2,000,000	2,000,000

Certificate of Insurance
(Liability) - 1 of 3

The following types of coverage are included in said policies (indicated by "X" in space):

A GENERAL LIABILITY:

Comprehensive Form	YES ____	NO ____
Premises-Operations	YES ____	NO ____
Explosion and Collapse Hazard	YES ____	NO ____
Underground Hazard	YES ____	NO ____
Products/Completed Operations Hazard	YES ____	NO ____
Contractual Insurance	YES ____	NO ____
Broad Form Property Damage Including Completed Operations	YES ____	NO ____
Independent Contractors	YES ____	NO ____
Personal Injury	YES ____	NO ____

B. AUTOMOBILE LIABILITY

Comprehensive Form Including Loading and Unloading	YES X	NO ____
Owned	YES X	NO ____
Hired	YES X	NO ____
Non-Owned	YES X	NO ____

C. EXCESS LIABILITY

Umbrella Form	YES ____	NO ____
Other than Umbrella Form	YES ____	NO ____

This certificate or verification of insurance is not an insurance policy and does not amend, extend, or alter the coverage afforded by the policies listed herein. Notwithstanding any requirement, term, or condition of any contract or other document with respect to which this certificate or verification of insurance may be issued or may pertain, the insurance afforded by the policies described herein is subject to all the terms, exclusions, and conditions of such policies.

The following types of coverage are included in said policies (indicated by "X" in space):

A GENERAL LIABILITY:

Comprehensive Form	YES ✓	NO ____
Premises-Operations	YES ✓	NO ____
Explosion and Collapse Hazard	YES ✓	NO ____
Underground Hazard	YES ✓	NO ____
Products/Completed Operations Hazard	YES ✓	NO ____
Contractual Insurance	YES ✓	NO ____
Broad Form Property Damage Including Completed Operations	YES ✓	NO ____
Independent Contractors	YES ✓	NO ____
Personal Injury	YES ✓	NO ____

B. AUTOMOBILE LIABILITY

Comprehensive Form Including Loading and Unloading	YES ✓	NO ____
Owned	YES ✓	NO ____
Hired	YES ✓	NO ____
Non-Owned	YES ✓	NO ____

C. EXCESS LIABILITY

Umbrella Form	YES ✓	NO ____
Other than Umbrella Form	YES ____	NO ____

This certificate or verification of insurance is not an insurance policy and does not amend, extend, or alter the coverage afforded by the policies listed herein. Notwithstanding any requirement, term, or condition of any contract or other document with respect to which this certificate or verification of insurance may be issued or may pertain, the insurance afforded by the policies described herein is subject to all the terms, exclusions, and conditions of such policies.

INSURANCE ENDORSEMENT

Description of Contract: City of San Diego - CONSTRUCTION OF **Ted Williams Parkway Pedestrain Overcrossing at Shoal Creek Drive**

Type of Insurance: Liability Insurance

This endorsement forms a part of Policy No. SISIEIL70106712

ENDORSEMENT: The City, it's officers and employees are included as additional insureds under said policies but only while acting in their capacity as such and only as respects operations of the named insured, his Contractors, and Subcontractor, any supplier, anyone directly or indirectly employed by any of them, or anyone for whose acts any of them may be liable in the performance of the above-referenced contract. This insurance shall not apply if the loss or damage is ultimately determined to be the result of the sole and exclusive negligence (including any connected with the preparation or approval of maps, drawings, opinions, reports, surveys, designs, or specifications) of one or more of the aforesaid additional insureds. The insurance afforded to these additional insureds is primary insurance. If the additional insureds have other insurance which might be applicable to any loss, the amount of this insurance shall not be reduced or pro-rated by the existence of such other insurance.

The Contractual Liability Insurance afforded is sufficiently broad to insure all of the matters set forth in the section entitled, "Indemnity", in the Special Provisions of the above-referenced contract except those matters set forth in the fourth paragraph thereof.

This endorsement does not increase the Company's total limits of liability.

KTA CONSTRUCTION INC.	Starr Indemnity Liability Co.
Name Insured (Contractor)	Insurance Company
1920 Cordell Ct #105	6151 Fairmont Ave #211
Street Number	Street Number
El Cajon, CA. 92020	San Diego CA 92120
City and State	City and State

By _____
(Company Representative)

State of _____)
)
County of _____)

SEE NOTICE ON PAGE 2 of 2

On this ____ day of _____, 200_; before me personally came _____ to be known who being duly sworn, did depose and say; That _____ is an authorized representative of the _____ and acknowledged to me that _____ executed the within instrument on behalf of said insurance company.

IN WITNESS WHEREOF, I have signed and affixed my official seal on the date in this certificate first above written.

NOTARY PUBLIC

NOTICE: No substitution or revision to the above endorsement form will be accepted. If the insurance called for is provided by more than one policy, a separate endorsement in the exact above form shall be provided for each policy.

Insurers must be authorized to do business and have an agent for service of process in California and have an "A-" policyholder's rating and a financial rating of at least Class VII in accordance with the most current Best's Rating.

CALIFORNIA ALL-PURPOSE ACKNOWLEDGMENT

CIVIL CODE § 1189

State of California
County of San Diego

On 9/28/12 (Date) before me, Linda Rae Franklin (Here Insert Name and Title of the Officer),

personally appeared Todd Cady (Name(s) of Signer(s)),

who proved to me on the basis of satisfactory evidence to be the person(~~s~~) whose name(~~s~~) is/~~are~~ subscribed to the within instrument and acknowledged to me that he/~~she/they~~ executed the same in his/~~her/their~~ authorized capacity(~~ies~~), and that by his/~~her/their~~ signature(~~s~~) on the instrument the person(~~s~~), or the entity upon behalf of which the person(~~s~~) acted, executed the instrument.

LINDA RAE FRANKLIN
COMM. #1889605
NOTARY PUBLIC-CALIFORNIA
SAN DIEGO COUNTY
My Commission Expires
MAY 16, 2014

I certify under PENALTY OF PERJURY under the laws of the State of California that the foregoing paragraph is true and correct.

WITNESS my hand and official seal.

Signature: Linda Rae Franklin (Signature of Notary Public)

Place Notary Seal Above

OPTIONAL

Though the information below is not required by law, it may prove valuable to persons relying on the document and could prevent fraudulent removal and reattachment of this form to another document.

Description of Attached Document

Title or Type of Document: _____

Document Date: _____ Number of Pages: _____

Signer(s) Other Than Named Above: _____

Capacity(ies) Claimed by Signer(s)

Signer's Name: _____	Signer's Name: _____
☐ Corporate Officer — Title(s): _____	☐ Corporate Officer — Title(s): _____
☐ Individual	☐ Individual
☐ Partner — ☐ Limited ☐ General	☐ Partner — ☐ Limited ☐ General
☐ Attorney in Fact	☐ Attorney in Fact
☐ Trustee	☐ Trustee
☐ Guardian or Conservator	☐ Guardian or Conservator
☐ Other: _____	☐ Other: _____
Signer Is Representing: _____	Signer Is Representing: _____
RIGHT THUMBPRINT OF SIGNER — Top of thumb here	RIGHT THUMBPRINT OF SIGNER — Top of thumb here

© 2010 National Notary Association • NationalNotary.org • 1-800-US NOTARY (1-800-876-6827)

Item #5907

INSURANCE ENDORSEMENT

Description of Contract: City of San Diego - CONSTRUCTION OF Ted Williams Parkway Pedestrain Overcrossing at Shoal Creek Drive

Type of Insurance: Liability Insurance

This endorsement forms a part of Policy No. 014AU02913.

ENDORSEMENT: The City, it's officers and employees are included as additional insureds under said policies but only while acting in their capacity as such and only as respects operations of the named insured, his Contractors, and Subcontractor, any supplier, anyone directly or indirectly employed by any of them, or anyone for whose acts any of them may be liable in the performance of the above-referenced contract. This insurance shall not apply if the loss or damage is ultimately determined to be the result of the sole and exclusive negligence (including any connected with the preparation or approval of maps, drawings, opinions, reports, surveys, designs, or specifications) of one or more of the aforesaid additional insureds. The insurance afforded to these additional insureds is primary insurance. If the additional insureds have other insurance which might be applicable to any loss, the amount of this insurance shall not be reduced or pro-rated by the existence of such other insurance.

The Contractual Liability Insurance afforded is sufficiently broad to insure all of the matters set forth in the section entitled, "Indemnity", in the Special Provisions of the above-referenced contract except those matters set forth in the fourth paragraph thereof.

This endorsement does not increase the Company's total limits of liability.

KTA CONSTRUCTION INC.	Sparta Insurance Company
Name Insured (Contractor)	Insurance Company
1920 Commercial St #105	185 Asylum Street CityPlace II
Street Number	Street Number
El Cajon, CA. 92020	Hartford, CT 06103
City and State	City and State
	By _____
	(Company Representative)

State of CA)
)
County of SAN DIEGO)

SEE NOTICE ON PAGE 2 of 2

On this 28 day of SEPTEMBER 2012 before me personally came THOMAS TROPIO to be known who being duly sworn, did depose and say: That THOMAS TROPIO is an authorized representative of the SPARTA INSURANCE CO. and acknowledged to me that THOMAS TROPIO executed the within instrument on behalf of said insurance company.

Insurance Endorsement
(Liability) - Page 1 of 2

IN WITNESS WHEREOF, I have signed and affixed my official seal on the date in this certificate first above written.

Morgan Cook
NOTARY PUBLIC

NOTICE: No substitution or revision to the above endorsement form will be accepted. If the insurance called for is provided by more than one policy, a separate endorsement in the exact above form shall be provided for each policy.

Insurers must be authorized to do business and have an agent for service of process in California and have an "A-" policyholder's rating and a financial rating of at least Class VII in accordance with the most current Best's Rating.

CALIFORNIA ALL-PURPOSE ACKNOWLEDGMENT

CIVIL CODE § 1189

State of California
County of SAN DIEGO

On SEP 28, 2012 (Date) before me, MEAGAN COOK, NOTARY PUBLIC (Here Insert Name and Title of the Officer)

personally appeared THOMAS TROPIO (Name(s) of Signer(s))

who proved to me on the basis of satisfactory evidence to be the person(s) whose name(s) is/~~are~~ subscribed to the within instrument and acknowledged to me that he/~~she/they~~ executed the same in his/~~her/their~~ authorized capacity(ies), and that by his/~~her/their~~ signature(s) on the instrument the person(s), or the entity upon behalf of which the person(s) acted, executed the instrument.

I certify under PENALTY OF PERJURY under the laws of the State of California that the foregoing paragraph is true and correct.

WITNESS my hand and official seal.

Signature: Meagan Cook (Signature of Notary Public)

MEAGAN COOK
Commission # 1944027
Notary Public - California
San Diego County
My Comm. Expires Jul 14, 2015

Place Notary Seal Above

OPTIONAL

Though the information below is not required by law, it may prove valuable to persons relying on the document and could prevent fraudulent removal and reattachment of this form to another document.

Description of Attached Document

Title or Type of Document: CERTIFICATE OF INSURANCE - KTA CONSTRUCTION

Document Date: SEP. 28, 2012 Number of Pages: 4

Signer(s) Other Than Named Above:

Capacity(ies) Claimed by Signer(s)

Signer's Name: THOMAS TROPIO

☐ Corporate Officer — Title(s):
☐ Individual
☐ Partner — ☐ Limited ☐ General
☐ Attorney in Fact
☐ Trustee
☐ Guardian or Conservator
☒ Other: CO. REPRESENTATIVE

Signer Is Representing: SPARTA INSURANCE CO.

RIGHT THUMBPRINT OF SIGNER — Top of thumb here

Signer's Name:

☐ Corporate Officer — Title(s):
☐ Individual
☐ Partner — ☐ Limited ☐ General
☐ Attorney in Fact
☐ Trustee
☐ Guardian or Conservator
☐ Other:

Signer Is Representing:

RIGHT THUMBPRINT OF SIGNER — Top of thumb here

© 2010 National Notary Association • NationalNotary.org • 1-800-US NOTARY (1-800-876-6827)

CONTRACTOR CERTIFICATION

DRUG-FREE WORKPLACE

PROJECT TITLE: **Ted Williams Parkway Pedestrain Overcrossing at Shoal Creek Drive**

I hereby certify that I am familiar with the requirements of San Diego City Council Policy No. 100-17 regarding Drug-Free Workplace as outlined in INSTRUCTION TO BIDDERS, "Drug-Free Workplace", of the project specifications, and that;

KTA CONSTRUCTION INC.

(Name under which business is conducted)

has in place a drug-free workplace program that complies with said policy. I further certify that each subcontract agreement for this project contains language which indicates the subcontractor's agreement to abide by the provisions of subdivisions a) through c) of the policy as outlined.

Signed _____

Printed Name Paul M. Haussaian

Title President

CONTRACTOR CERTIFICATION

AMERICAN WITH DISABILITIES ACT (ADA) COMPLIANCE CERTIFICATION

PROJECT TITLE: **Ted Williams Parkway Pedestrain Overcrossing at Shoal Creek Drive**

I hereby certify that I am familiar with the requirements of San Diego City Council Policy No. 100-4 regarding the American With Disabilities Act (ADA) outlined in the INSTRUCTION TO BIDDERS, "American With Disabilities Act", of the project specifications, and that;

KTA CONSTRUCTION INC.

(Name under which business is conducted)

has in place workplace program that complies with said policy. I further certify that each subcontract agreement for this project contains language which indicates the subcontractor's agreement to abide by the provisions of the policy as outlined.

Signed _____

Printed Name Paul M. Haussmann

Title President

CONTRACTOR CERTIFICATION

CONTRACTOR STANDARDS – PLEDGE OF COMPLIANCE

PROJECT TITLE: Ted Williams Parkway Pedestrain Overcrossing at Shoal Creek Drive

I declare under penalty of perjury that I am authorized to make this certification on behalf of KTA CONSTRUCTION INC., as Contractor, that I am familiar with the requirements of City of San Diego Municipal Code § 22.3224 regarding Contractor Standards as outlined in INSTRUCTION TO BIDDERS ("Contractor Standards"), of the project specifications, and that Contractor has complied with those requirements.

I further certify that each of the Contractor's subcontractors whose subcontracts are greater than $50,000 in value has completed a Pledge of Compliance attesting under penalty of perjury of having complied with City of San Diego Municipal Code § 22.3224.

Dated this 27th Day of Sept., 2012.

Signed _____

Printed Name Paul M. Harrison

Title President

AFFIDAVIT OF DISPOSAL

WHEREAS, on the _____ DAY OF _____, 2____, the undersigned entered into and executed a contract with the City of San Diego, a municipal corporation, for:

TED WILLIAMS PARKWAY PEDESTRAIN OVERCROSSING AT SHOAL CREEK DRIVE
(Name of Project)

as particularly described in said contract and identified as Bid No. **K-13-4885-DBB-3;** SAP No. (WBS/CC/IO) **S-00941** and **WHEREAS**, the specifications of said contract requires the Contractor to affirm that "all brush, trash, debris, and surplus materials resulting from this project have been disposed of in a legal manner"; and **WHEREAS**, said contract has been completed and all surplus materials disposed of:

_____

_____

_____

NOW, THEREFORE, in consideration of the final payment by the City of San Diego to said Contractor under the terms of said contract, the undersigned Contractor, does hereby affirm that all surplus materials as described in said contract have been disposed of at the following location(s)

_____

_____

_____

and that they have been disposed of according to all applicable laws and regulations.

Dated this _____ DAY OF _____, 2_____.

_____Contractor
by

ATTEST:

State of _____
County of _____

On this _____ DAY OF _____, 2____, before the undersigned, a Notary Public in and for said County and State, duly commissioned and sworn, personally appeared_____ known to me to be the _____ Contractor named in the foregoing Release, and whose name is subscribed thereto, and acknowledged to me that said Contractor executed the said Release.

Notary Public in and for said County and State

COMPANY LETTERHEAD

CERTIFICATE OF COMPLIANCE

Materials and Workmanship Compliance

For Contract **Ted Williams Parkway Pedestrain Overcrossing at Shoal Creek Drive**

I certify that the material listed below complies with the materials and workmanship requirements of the CalTrans Contract Plans, Special Provisions, Standard Specifications, and Standard Plans for the contract listed above.

I also certify that I am an official representative for _____, the manufacturer of the material listed above. Furthermore, I certify that where California test methods, physical or chemical test requirements are part of the specifications, that the manufacturer has performed the necessary quality control to substantiate this certification.

Material Description:

Manufacturer: _____

Model: _____

Serial Number (if applicable) _____

Quantity to be supplied: _____

Remarks: _____

Signed by: _____

Printed Name: _____

Title: _____

Company: _____

Date: _____

SAMPLE

City of San Diego
Engineering and Capital Projects, Field Division

NOTICE OF MATERIALS TO BE USED

To: _____ Date: _____, 20___
Resident Engineer

You are hereby notified that the materials required for use under Contract No. _____
for construction of **Ted Williams Parkway Pedestrain Overcrossing at Shoal Creek Drive**
_____
_____,
in the City of San Diego, will be obtained from sources herein designated.

CONTRACT ITEM NO. (Bid Item)	**KIND OF MATERIAL (Category)**	**NAME AND ADDRESS WHERE MATERIAL CAN BE INSPECTED (At Source)**

It is requested that you arrange for a sampling, testing, and inspection of the materials prior to delivery, in accordance with Section 4-1.11 of the contract documents, where it is practicable, and in accordance with your policy. It is understood that source inspection does not relieve the Contractor of full responsibility for incorporating in the work, materials that comply in all respects with the contract plans and specifications, nor does it preclude subsequent rejection of materials found to be undesirable or unsuitable.

Distribution:

Supplier

Yours truly,

_____
Signature of Supplier

_____
Address

Phone Number ( ) _____

SAMPLE

SUPPLEMENTARY SPECIAL PROVISIONS (SSP)

THESE SUPPLEMENTARY SPECIAL PROVISIONS CONFORM TO THE STANDARD SPECIFICATIONS FOR PUBLIC WORKS CONSTRUCTION (THE GREENBOOK) CURRENTLY ADOPTED BY THE CITY, INCLUDING ITS CURRENT SUPPLEMENT AMENDMENTS (CITY SUPPLEMENTS INCLUDED IN THE WHITEBOOK), EXCEPT FOR THE FOLLOWING:

STYLE OF SPECIFICATIONS

The City is gradually standardizing the style and language of the standard specifications for the public works construction. The new style and language follows the Federal guidelines for "Plain Language" to the extent possible.

The use of this new style does not change the meaning of a specification not yet using this style. Where used in the Contract Documents, statement or command type phrases (i.e., active voice and imperative mood) refer to and are directed at the Bidder or Contractor as applicable. The specifications are written to the Bidder before award and the Contractor after. Before award, interpret sentences written in the imperative mood as starting with "The Bidder must" and interpret "you" as "the Bidder" and "your" as "the Bidder's." After award, interpret sentences written in the imperative mood as starting with "The Contractor must" and interpret "you" as "the Contractor" and "your" as "the Contractor's." Similarly, interpret "we" and "us" as "the City" and "our" as "the City's."

PART 1 – GENERAL PROVISIONS

SECTION 1 – TERMS, DEFINITIONS, ABBREVIATIONS, UNITS OF MEASURE, AND SYMBOLS

1-2 TERMS AND DEFINITIONS.

Agency – ADD the following:

Regulatory activities handled by the City of San Diego Developmental Services, Fire and Planning Departments, or any other City Department are not subject to the responsibilities of the City under this contract.

Certificate of Compliance – To the City Supplement, DELETE in its entirety and SUBSTITUTE with the following:

Certificate of Compliance – A written document signed and submitted by a supplier or manufacturer that certifies that the material or assembled material supplied to the Work site complies with the requirements of the Contract Documents.

Contract Documents – To the City Supplement, DELETE in its entirety and SUBSTITUTE with the following:

The Agreement, Addendum, Invitation to Bid, Instructions to Bidders, special notice page, funding agency provisions, Bid and documentation accompanying the Bid and any post-bid documentation submitted prior to the Notice of Award when attached as an exhibit to the Contract, Bonds, permits

from jurisdictional regulatory agencies, Supplementary Special Provisions (SSP), City's EOCP Requirements, City Supplement, Plans, Standard Plans, Construction Documents, Reference Specifications listed in the Invitation to Bid or the RFP for Design-Build contracts, Request for Qualifications (RFQ), Statement of Qualifications (SOQ), Request for Proposals (RFP), modifications issued after the execution of the Contract e.g., Change Orders, Construction Manager At Risk's Guaranteed Maximum Price including written qualifications, assumptions and conditions thereto and Pre-construction Services Agreement.

ADD: **Limited Notice To Proceed** – A written notice given from the City to the Contractor that authorizes the Contractor to start a limited amount of work that is not Construction Work, such as finalizing subcontract agreements, ordering materials, mobilization, furnishing a field office, and any other preliminary work done prior to performing Construction Work.

Normal Working Hours. To the City Supplement, ADD the following:

The Normal Working Hours shall be 8:30 AM to 3:30 PM.

Notice of Completion (NOC) – ADD the following:

See California Civil Code section 3093.

Samples - Physical examples which illustrate materials, equipment or workmanship and establish standards by which the Work will be evaluated.

SECTION 2 - SCOPE AND CONTROL OF WORK

2-1.2.2 Joint Venture Contractors. To the City Supplement, last paragraph, DELETE in its entirety and SUBSTITUTE with the following:

The Joint Venture shall designate an on-site representative and an alternate in writing. The on-site representative and the alternate shall have the full authority to bind all Joint Venture partners.

The Joint Venture shall provide a copy of the Joint Venture agreement and the Joint Venture license to the City within 10 Working Days after receipt by the Bidder of Contract forms.

2-3.1.2 Subcontractor List. ADD the following:

For Extra Work, the Contractor shall submit Form CC10, "CONTRACT CHANGE ORDER (CCO)" with each CCO proposal. Form CC10 is available for download from the EOCP site at: http://www.sandiego.gov/eoc/pdf/cc10.pdf

2-3.2 Self Performance. DELETE in its entirety and SUBSTITUTE with the following:

The Contractor shall perform, with its own organization, Contract work amounting to at least **30 percent** of the base bid alone or base bid and any additive or deductive alternate(s) that together when added or deducted form the basis of determining the Apparent Low Bidder as specified. The self performance percentage requirement will be waived for contracts when a "B" License is required or allowed.

2-3.3 Status of Subcontractors. ADD the following:

With every request for payment, the Contractor shall submit to the Engineer a breakdown showing monthly and cumulative amounts of the Work performed under Change Order by the Contractor and the Subcontractors. The reporting format shall be approved by the Engineer.

2-3.4 Subcontract Requirements. To the City Supplement, ADD the following paragraph:

The Contractor shall ensure that all of its Subcontractors are licensed at the time of the execution of their subcontract agreements. In the event a Subcontractor is not properly licensed, the Contractor shall cease payment to Subcontractor for all work performed when the Subcontractor was improperly licensed. Any payment made by the Contractor to a Subcontractor for work performed when the Subcontractor was unlicensed shall be returned to the City.

Where the Contract Documents require that a particular product be installed or applied by an applicator approved by the manufacturer, it is the Contractor's responsibility to ensure the Subcontractor or Supplier employed for such work is approved by the manufacturer.

2-5.2 Precedence of Contract Documents. To the Cit Supplement, DELETE in its entirety and SUBSTITUTE with the following:

2-5.2 Precedence of Contract Documents.. If there is a conflict between any of the Contract Documents, the document highest in the order of precedence shall control. The order of precedence, from highest to lowest, shall be as follows:

1) Permits (i.e., issued by jurisdictional regulatory agencies)
2) Change Orders and Supplemental Agreements; whichever occurs last
3) Contract and Agreement
4) Addenda
5) Bid (e.g., price Proposal for Design-Build contracts)
6) Request for Proposal (RFP)
7) Invitation to Bid
8) Instruction to Bidders
9) Request for Qualifications (RFQ)
10) Special Provisions (i.e., City's EOCP Requirements, City Supplement, and Supplementary Special Provisions (SSP))
11) Plans
12) Construction Documents (for Design-Build contracts)
13) Standard Drawings
14) Reference Specifications (e.g., GREENBOOK)
15) Technical Proposal (for Design-Build contracts)
16) Statement of Qualifications (SOQ)

When additional requirements by the funding sources are physically or by reference incorporated in the Contract Documents, the funding source's requirements shall govern **unless specified otherwise**.

Figured dimensions shall take precedence over scaled dimensions. Detailed drawings shall take precedence over general drawings.

2-5.3.1 General. DELETE in its entirety and SUBSTITUTE with the following:

When required by the Contract Documents or when requested by the Engineer, the Contractor shall provide the submittals as specified in 2-5.3.2, 2-5.3.3, and 2-5.3.4 to the Engineer. Materials shall neither be furnished nor fabricated, nor shall any work for which submittals are required be performed before the required submittals have been reviewed and accepted by the Engineer. The payment for the submittals shall be included in the various Bid items. Neither review nor acceptance of submittals by the Engineer shall relieve the Contractor from responsibility for errors, omissions, or deviations from the Contract Documents, unless such deviations were specifically called to the attention of the Engineer in the letter of transmittal. The Contractor shall be responsible for the correctness of the submittals.

The Contractor shall allow a minimum of 20 working days for review of submittals unless otherwise specified in the Special Provisions. Each submittal shall be accompanied by a letter of transmittal.

2-5.4.1 General. ADD the following:

Source Identification e.g., RFI numbers and Change Order numbers as required to identify the source of the change to the Contract Documents shall be noted.

2-5.4.2 Asset Specific Red-lines (d). ADD the following:

- Dimensional changes to the drawings.
- Revisions to details shown on drawings.
- Depths of foundations below first floor.
- Locations and depths of underground utilities.
- Revisions to routing of piping and conduits.
- Revisions to electrical circuitry.
- Actual equipment locations.
- Duct size and routing.
- Locations of concealed internal utilities.
- Changes made by Change Order.
- Details not on original Plans.

ADD the following:

h) Slurry Seal and Asphalt Overlay Red-Lines: The Contractor shall clearly record on the City provided forms in MS Excel format the actual dates and quantity of each Bid item applied to each street segment and comments regarding each segment. The Contractor shall record reasons if no work is performed.

2-6 WORK TO BE DONE. ADD the following:

In accordance with the provisions of California Law, the Contractor shall possess or require the Subcontractor(s) to posses valid appropriate license(s) for the Work being performed.

2-7 SUBSURFACE DATA. ADD the following:

In preparation of the Contract Documents, the designer has relied upon the following reports of explorations and tests of subsurface conditions at the Work Site:

1. Report of Preliminary Geotechnical Investigation dated April 7, 2010 by GEOCON Incorporated

The report listed above is available for review in Appendix "J" following these specifications.

2-9.1 Permanent Survey Markers. DELETE in its entirety and SUBSTITUTE with the following:

The Contractor shall notify the Engineer or the owner on a Private Contract, at least 7 days before starting the Work to allow for the preservation of survey markers, survey monuments, lot stakes (tagged), and benchmarks. The Engineer or the owner on a Private Contract, will, at its cost, file a Corner Record Form referencing survey monuments subject to disturbance in the Office of the County Surveyor prior to the start of construction and also prior to the completion of construction for the replacement of survey monuments. The Contractor shall not disturb or permanently cover survey markers, survey monuments, lot stakes (tagged), or benchmarks without the consent of the Engineer or the owner on a Private Contract. The Contractor shall bear the expense of uncovering and replacing any that may be disturbed without permission. Replacement shall be done only under the direction of the Engineer by a Registered Land Surveyor or a Registered Civil Engineer authorized to practice land surveying within the State of California. When a change is made in the finished elevation of the pavement of any roadway in which a permanent survey monument is located, the Contractor shall adjust the monument cover to the new grade within 7 days of finished paving unless otherwise specified in the Special Provisions.

2-10 AUTHORITY OF BOARD AND ENGINEER. ADD the following:

Regulating agencies of the City, such as Developmental Services, Fire and Planning Departments, enforce Legal Requirements and standards. These enforcement activities are not subject to the responsibilities of the Engineer under this Agreement.

2-11 INSPECTION. ADD the following:

The City may utilize field inspectors to assist the Engineer during construction in observing performance of the Contractor. The inspector is for the purpose of assisting the Engineer and shall not be confused with an inspector with a City regulatory agency or with a Special Inspector.

Code compliance testing (including all Geotechnical requirements) and inspections required by codes or ordinances, or by a plan approval authority, shall be the responsibility of and shall be paid by the Contractor, unless otherwise provided in the Contract Documents.

The Contractor's quality control testing and inspections shall be the sole responsibility of the Contractor and paid by the Contractor included in the Bid price.

ADD: 2-17 CONTRACTOR REGISTRATION. The Contractor, Subcontractors, and Suppliers shall register with the City's EOCP via Prism® i.e., the City's web-based contract compliance portal at: https://pro.prismcompliance.com/contractor/plugins/pages/contractormenu.aspx.

The Contractor shall ensure that proposed Subcontractors and Suppliers have completed the registration prior to Notice of Intent to Award. If the Contractor fails to have its Subcontractors and Suppliers registered after the NTP has been issued, the City will withhold a minimum of 10% in addition to the Retention from all invoices submitted until the Contractor and all listed Subcontractors and Suppliers are properly registered in PRISM.

SECTION 3 – CHANGES IN WORK

3-3.2.2 Basis for Establishing Costs (a) Labor, City Supplement, first and second paragraphs, DELETE in entirety and SUBSTITUTE with the following:

The City reserves the right to request financial records of salaries for an employee, wages, bonuses and deductions to substantiate the actual cost of labor certified by a California licensed Certified Public Accountant. The Contractor shall use the City provided form i.e., "PUBLIC WORKS PAYROLL REPORTING FORM" which is available at http://www.sandiego.gov/eoc/pdf/payrollreport.pdf to list the labor rates of its personnel and Subcontractors who work on this Project. An initial submittal shall be made prior to NTP.

The payment for payroll records shall be included in the various Bid item unless a separate Bid item has been provided.

SECTION 4 - CONTROL OF MATERIALS

4-1.3.1 General. First paragraph, ADD the following:

Other standard items or materials typically accepted by Certificate of Compliance shall not require inspection at the source unless specified in the Special Provisions. For a list of these items or materials, the Contractor may refer to the Contract Documents.

4-1.3.5 Special Inspections. To the City Supplement, ADD the following:

Special Inspection and testing by the Special Inspectors shall meet the minimum requirements of the prevailing Codes and by the City's Development Services Department (DSD) and reference in http://www.sandiego.gov/development-services/industry/special.shtml

4-1.5 Certificates of Compliance. To the City Supplement, DELETE in its entirety and SUBSTITUTE with the following:

4-1.5 Certificates of Compliance. DELETE in its entirety and SUBSTITUTE with the following:

Certificates of Compliance shall be furnished to the Engineer prior to the use of any material or assembled material for which these Specifications so require or if so required by the Engineer.

The Engineer may waive the materials testing requirements of the Specifications and accept a Certificate of Compliance. Manufacturing test data may be required by the Engineer to be included with the submittal.

Materials used on the basis of a Certificate of Compliance may be sampled and tested at any time. The submission of a Certificate of Compliance shall not relieve the Contractor of responsibility for incorporating material in the Work which conforms to the requirements of the Contract Documents,

and any material not conforming to the requirements will be subject to rejection whether in place or not.

When professional certification of performance criteria of materials, systems or equipment is required by the Contract Documents, the City shall be entitled to rely upon the accuracy and completeness of such calculations and certifications.

4-1.6 Trade Names or Equals. To the City Supplement, DELETE in its entirety and SUBSTITUTE with the following:

ADD the following:

Whenever materials or equipment are indicated in the Contract Documents by using the name of a proprietary item or the name of a particular Supplier, the naming of the item is intended to establish the type, function, and quality required. Unless stated otherwise, materials or equipment of other Suppliers may be accepted if sufficient information is submitted to the Engineer for review to determine whether the material or equipment proposed is equivalent or equal to that named.

a) The Contractor shall submit its list of proposed substitutions for "an equal" ("or equal") item(s) **no /no later than 10 Working Days after the determination of the Apparent Low Bidder** and on a City form when provided by the City.

b) The request for substitution shall include the following information:

   i. Whether or not acceptance of the substitute for use in the Work will require a change in any of the Contract Documents to adopt the design to the proposed substitute.

   ii. Whether or not incorporation or use of the substitute in connection with the Work is subject to payment of any license fee or royalty.

   iii. All variations of the proposed substitute from the items originally specified will be identified.

   iv. Available maintenance, repair, and replacement service requirements. The manufacturer shall have a local service agency within 50 miles of the site which maintains properly trained personnel and adequate spare parts and is able to respond and complete repairs within 24 hours.

   v. Certification that the proposed substitute will perform adequately the functions and achieve the results called for by the general design, and be similar and of equal substance to that indicated, and be suited to the same use as that specified.

c) There is no guaranteed time frame for the City's review of the substitution requests.

d) The burden of proof as to the type, function, and quality of any such substitute product, material or equipment shall be upon the Contractor. The Engineer may require at the Contractor's expense additional data about the proposed substitute.

e) If the Engineer takes no exceptions to the proposed substitution, it shall not relieve the Contractor from responsibility for the efficiency, sufficiency, quality, and performance of the substitute material or equipment, in the same manner and degree as the material and equipment specified by name.

f) The lack of action(s) on the Engineer's side within the Contractor's requested time shall not constitute acceptance of the substitution.

g) Acceptance by the Engineer of a substitute item shall not relieve the Contractor of the responsibility for full compliance with the Contract Documents.

h) For the substitution review process or to have materials listed on the AML, refer to the AML standard review process.

i) The Bid submittal shall be based on the material and equipment specified by name in the Contract. If the proposal is rejected by the Engineer, the Contractor shall not be entitled to either an extension in Contract Time, increase in the Contract Price, or both.

j) As applicable, no Shop Drawing or Working Drawing submittals shall be made for a substitute item nor shall any substitute item be ordered, installed, or utilized without the Engineer's prior written.

k) The Contractor shall reimburse the City for the charges of the Engineer for evaluating each proposed substitute.

l) For Design-Build contracts, one copy of all designer reviewed submittals shall be provided to the Engineer.

ADD: 4-1.11 Street Lighting And Traffic Signal Materials List. The Contractor shall be responsible for furnishing a Notice of Materials to Be Used at the preconstruction meeting. The list of materials shall identify Bid item number for which the material is to be incorporated, category of material to be supplied, and the name and address where the material can be inspected at the source where it is produced, not the Site. The Notice of Materials to Be Used shall include the following categories of material: signal poles, signal equipment and fixtures, foundation reinforcing steel, conduit, pull boxes, and conductor or cable. The Notice of Materials to Be Used form is provided in the Contract and shall be used to provide the required material information.

Certificates of Compliance conforming to 4-1.5, “Certificate of Compliance” are required for the major construction material categories identified above. A sample Certificate of Compliance is provided in the Contract. Certificates shall be furnished, to the Engineer, before the material is brought on the Site.

The payment for the material certification process shall be included in the lump sum price for the traffic signal system or be distributed in individual bid items if no lump sum quantity is identified in the bidding documents.

SECTION 6 - PROSECUTION, PROGRESS AND ACCEPTANCE OF WORK

6-1.2 Commencement of Work. To the GREENBOOK and the City Supplement, DELETE in its entirety and SUBSTITUTE with the following:

Unless specified otherwise, construction shall start within 5 Working Days after NTP and be diligently prosecuted to completion within the Contract Time. The Contractor shall not start any construction activity at the Site until the Pre-construction Meeting is held and the NTP has been issued by the Engineer.

Upon the Contractor’s written request, the City may delay the NTP as follows:

a) Up to 5 Working Days from the Pre-construction Meeting, or

b) Up to 40 Working Days from the Limited NTP for the preparation, submittal, obtaining approval for and filing of the PRDs in accordance with 801, "STORM WATER POLLUTION CONTROL," or

c) Up to 60 Working Days from the Limited NTP for the preparation, submittal, and approval of the TCP on "D-sheets" when specified in 7-10.2, "Traffic Control."

The Contractor shall notify SDG&E at least 10 Working Days prior to excavating within 10' of SDG&E Underground High Voltage Transmission Power Lines (i.e., 69 KV and higher).

For areas that do not require engineered TCP on D-sheets, the Contractor may at any time after the Pre-construction Meeting obtain a TCP Permit via Working Drawings or the City's over the counter process and start the Work. If the Contractor decides to commence the construction work before the completion of the D-sheet TCPs, the Contractor shall forfeit the 60 Working Days specified here. The D-sheet TCP shall be done concurrently and no additional time will be granted.

For paving Work, the Contractor shall coordinate the Work to facilitate the installation and protection of the new curb ramps and associated concrete work prior to commencing the asphalt overlay operations. The Work at a specific location shall not commence until all layouts and measurements are agreed upon by both the Contractor and the Engineer.

ADD: 6-1.8 Pre-construction Meeting. Within 20 Working Days from the Limited NTP the Engineer will schedule a mandatory pre-construction meeting (Pre-construction Meeting) with the Contractor. The agenda will include items such as NTP, design services and submittal and review process for Design-Build contracts, critical elements of the work schedule, submittal schedule, cost breakdown of major lump sum items, payment requests and processing, environmental and community concerns, coordination with the involved utility firms, the level of record project documents required and emergency telephone numbers for all representatives involved in the course of construction.

6-7.1 General. To the City Supplement, ADD the following:

d) If weather condition is suitable, the Contractor shall complete each street segment within 15 Working Days from the day the slurry seal or asphalt overlay is placed. Each completed segment shall include other incidental Work items e.g., weed abatement, damaged asphalt pavement replacement, asphalt patching, resurfacing, striping, markings, raised pavement markers, and inlet markers.

ADD: 6-8.1 Completion. To the City Supplement, DELETE in its entirety and SUBSTITUTE with the following:

6-8.1 Completion. The Contractor shall submit a written assertion that the Work has been completed. If, in the Engineer's judgment, the Work has been completed in accordance with the Contract Documents, the Engineer will set forth in writing the date the Work was completed. This will be the date when the Contractor is relieved from responsibility to protect and maintain the Work.

6-8.2 Acceptance. To the City Supplement, DELETE in its entirety and SUBSTITUTE with the following:

6-8.2 Acceptance. Acceptance will occur after all of the requirements contained in the Contract Documents have been fulfilled. If, in the Engineer's judgment, the Contractor has fully performed the Contract, the Engineer will accept the Contractor's performance of the Contract.

6-8.3 Warranty. To the City Supplement, DELETE in its entirety and SUBSTITUTE with the following:

6-8.3 Warranty. Unless specified otherwise, the Work shall be warranted by the Contractor against defective workmanship and materials for a period of 1 year.

a) The warranty period shall start on the date of completion of the Work as determined by the Engineer.

b) The Contractor shall provide an unconditional warranty on all installed fiber optic cable for a minimum period of 2 years.

c) The warranty period for the following items of the Work shall be 3 years:

   1. Work under Section 500 (requires Long Term Warranty Contract (LTWC))
   2. DWT Construction (requires manufacturer's warranty)
   3. LED signal modules (requires manufacturer's warranty)

d) Private sewer pumps including the alarm panel and all other accessories. The Contractor shall provide the City and property owner a copy of the warranty. (requires manufacturer's warranty)

e) The Contractor shall involve the manufacturer in the installation and startup as needed to secure any extended warranty required.

f) The warranty period for specific items covered under manufacturers' or suppliers' warranties shall commence on the date they are placed into service at the direction of or as approved by the Engineer in writing.

g) All warranties, express or implied, from Subcontractors or Suppliers, of any tier, for the work performed and materials furnished shall be assigned, in writing, to the City, and such warranties shall be delivered to the Engineer prior to acceptance of the Contractor's performance of the Contract.

h) The Contractor shall replace or repair defective Work in a manner satisfactory to the Engineer, after notice to do so from the Engineer, and within the time specified in the notice. If the Contractor fails to make such replacement or repairs within the time specified in the notice, the City may perform the replacement or repairs at the Contractor's expense. If the Contractor fails to reimburse the City for the actual costs, the Contractor's Surety shall be liable for the cost thereof.

i) Nothing in this warranty is intended to limit any manufacturer's warranty which provides the City with greater warranty rights than set forth in this section or the Contract Documents.

j) These specifications are not intended to constitute a period of limitations or waiver of any other rights or remedies City may have regarding the Contractor's other obligations under the Contract Documents or federal or state law.

k) The Contractor shall respond and initiate corrective action within 24 hours of notice of nonconforming Work that poses an imminent threat to person or property.

6-9 LIQUIDATED DAMAGES. To the City Supplement, DELETE in its entirety and SUBSTITUTE with the following:

MODIFY to increase the daily value from $250 to $1,000 for contracts with a value of over $100,000.

SECTION 7 - RESPONSIBILITIES OF THE CONTRACTOR

7-3 LIABILITY INSURANCE. DELETE in its entirety and SUBSTITUTE with the following:

The insurance provisions herein must not be construed to limit your indemnity obligations contained in this contract.

ADD: 7-3.1 Policies and Procedures.

a) You must procure the insurance described below, at your sole cost and expense, to provide coverage against claims for loss including injuries to persons or damage to property, which may arise out of or in connection with the performance of the Work by you, your agents, representatives, officers, employees or subcontractors.

b) Insurance coverage for property damage resulting from your operations is on a replacement cost valuation. The market value will not be accepted.

c) You must maintain this insurance for the duration of this contract and at all times thereafter when you are correcting, removing, or replacing Work in accordance with this contract. Your liabilities under this contract, e.g., your indemnity obligations, will is not deemed limited to the insurance coverage required by this contract.

d) Payment for insurance is included in the various items of Work as bid by you, and except as specifically agreed to by the City in writing, you are not entitled to any additional payment. Do not begin any work under this contract until you have provided and the City has approved all required insurance.

e) Policies of insurance must provide that the City is entitled to 30 days (10 days for cancellation due to non-payment of premium) prior written notice of cancellation or non-renewal of the policy. Maintenance of specified insurance coverage is a material element of this contract. Your failure to maintain or renew coverage or to provide evidence of renewal during the term of this contract may be treated by the City as a material breach of contract.

ADD: 7-3.2 Types of Insurance.

7-3.2.1 Commercial General Liability Insurance.

a) Commercial General Liability Insurance must be written on the current version of the ISO Occurrence form CG 00 01 07 98 or an equivalent form providing coverage at least as broad.

b) The policy must cover liability arising from premises and operations, XCU (explosions, underground, and collapse), independent contractors, products/completed operations, personal injury and advertising injury, bodily injury, property damage, and liability assumed under an insured's contract (including the tort liability of another assumed in a business contract).

c) There must be no endorsement or modification limiting the scope of coverage for either "insured vs. insured" claims or contractual liability. You must maintain the same or equivalent insurance for at least 10 years following completion of the Work.

d) All costs of defense must be outside the policy limits. Policy coverage must be in liability limits of not less than the following:

General Annual Aggregate Limit	Limits of Liability
Other than Products/Completed Operations	$2,000,000
Products/Completed Operations Aggregate Limit	$2,000,000
Personal Injury Limit	$1,000,000
Each Occurrence	$1,000,000

7-3.2.2 Commercial Automobile Liability Insurance.

a) You must provide a policy or policies of Commercial Automobile Liability Insurance written on the current version of the ISO form CA 00 01 12 90 or later version or equivalent form providing coverage at least as broad in the amount of $1,000,000 combined single limit per accident, covering bodily injury and property damage for owned, non-owned, and hired automobiles ("Any Auto").

b) All costs of defense must be outside the limits of the policy.

7-3.2.5 Contractors Builders Risk Property Insurance..

a) You must provide at your expense, and maintain until Final Acceptance of the Work, a Special Form Builders Risk Policy or Policies. This insurance must be in an amount equal to the replacement cost of the completed Work (without deduction for depreciation) including the cost of excavations, grading, and filling. The policy or policies limits must be 100% of this contract value of the Work plus15% to cover administrative costs, design costs, and the costs of inspections and construction management.

b) Insured property must include material or portions of the Work located away from the Site but intended for use at the Site, and must cover material or portions of the Work in transit. The policy or policies must include as insured property scaffolding, falsework, and temporary buildings located at the Site. The policy or policies must cover the cost of removing debris, including demolition.

c) The policy or policies must provide that all proceeds thereunder must be payable to the City as Trustee for the insured, and must name the City, you, Subcontractors, and Suppliers of all tiers as named insured. We as Trustee will collect, adjust, and receive all monies which may become due and payable under the policy or policies, may compromise any and all claims thereunder, and will apply the proceeds of such insurance to the repair, reconstruction, or replacement of the Work.

d) Any deductible applicable to the insurance must be identified in the policy or policies documents and responsibility for paying the part of any loss not covered because of the application of such deductibles must be apportioned among the parties except for the City as follows: if there is more than one claimant for a single occurrence, then each claimant must pay a pro-rata share of the per occurrence deductible based upon the percentage of their paid claim to the total paid for insured. The City must be entitled to 100% of its loss. You must pay the City any portion of that loss not covered because of a deductible, at the same time the proceeds of the insurance are paid to the City as trustee.

e) Any insured, other than the City, making claim to which a deductible applies must be responsible for 100% of the loss not insured because of the deductible. Except as provided for under California law, the policy or policies must provide that the City is entitled to 30 days prior written notice (10 days for cancellation due to non-payment of premium) of cancellation or non-renewal of the policy or policies.

ADD: 7-3.3 Rating Requirements. Except for the State Compensation Insurance Fund, all insurance required by this contract as described herein must be carried only by responsible insurance companies with a rating of, or equivalent to, at least "A-, VI" by A.M. Best Company, that are authorized by the California Insurance Commissioner to do business in the State, and that have been approved by the City.

7-3.3.1 Non-Admitted Carriers. The City will accept insurance provided by non-admitted, "surplus lines" carriers only if the carrier is authorized to do business in the State and is included on the List of Eligible Surplus Lines Insurers (LESLI list).

All policies of insurance carried by non-admitted carriers must be subject to all of the requirements for policies of insurance provided by admitted carriers described herein.

ADD: 7-3.4 Evidence of Insurance. Furnish to the City documents e.g., certificates of insurance and endorsements evidencing the insurance required herein, and furnish renewal documentation prior to expiration of this insurance. Each required document must be signed by the insurer or a person authorized by the insurer to bind coverage on its behalf. We reserve the right to require complete, certified copies of all insurance policies required herein.

ADD: 7-3.5 Policy Endorsements.

7-3.5.1 Commercial General Liability Insurance

7-3.5.1.1 Additional Insured.

a) You must provide at your expense policy endorsement written on the current version of the ISO Occurrence form CG 20 10 11 85 or an equivalent form providing coverage at least as broad.

b) To the fullest extent allowed by law e.g., California Insurance Code §11580.04, the policy must be endorsed to include the City and its respective elected officials, officers, employees, agents, and representatives as additional insured.

    1. The additional insured coverage for projects for which the Engineer's Estimate is $1,000,000 or more must include liability arising out of: (a) Ongoing operations performed by you or on your behalf, (b) Your products, (c) Your work, e.g., your completed operations performed by you or on your behalf, or (d) premises owned, leased, controlled, or used by you.

    2. The additional insured coverage for projects for which the Engineer's Estimate is less than $1,000,000 must include liability arising out of: (a) Ongoing operations performed by you or on your behalf, (b) Your products, or (c) premises owned, leased, controlled, or used by you.

7-3.5.1.2 Primary and Non-Contributory Coverage. The policy must be endorsed to provide that the coverage with respect to operations, including the completed operations, if appropriate, of the Named Insured is primary to any insurance or self-insurance of the City and its elected officials, officers, employees, agents and representatives. Further, it must provide that any insurance maintained by the City and its elected officials, officers, employees, agents and representatives must be in excess of the Contractor's insurance and must not contribute to it.

7-3.5.1.3 Project General Aggregate Limit. The policy or policies must be endorsed to provide a Designated Construction Project General Aggregate Limit that will apply only to the Work. Only claims payments which arise from the Work must reduce the Designated Construction Project General Aggregate Limit. The Designated Construction Project General Aggregate Limit must be in addition to the aggregate limit provided for the products-completed operations hazard.

7-3.5.2 Commercial Automobile Liability Insurance.

7-3.5.2.1 Additional Insured. Unless the policy or policies of Commercial Auto Liability Insurance are written on an ISO form CA 00 01 12 90 or a later version of this form or equivalent form providing coverage at least as broad, the policy must be endorsed to include the City and its respective elected officials, officers, employees, agents, and representatives as additional insured, with respect to liability arising out of automobiles owned, leased, hired or borrowed by you or on your behalf. This endorsement is limited to the obligations permitted by California Insurance Code §11580.04.

7-3.5.5 Builders Risk Endorsements.

7-3.5.5.1 Waiver of Subrogation. The policy or policies must be endorsed to provide that the insurer will waive all rights of subrogation against the City, and its respective elected officials, officers, employees, agents, and representatives for losses paid under the terms of the policy or policies and which arise from work performed by the Named Insured for the City.

7-3.5.5.2 Builders Risk – Partial Utilization. If we desire to occupy or use a portion or portions of the Work prior to Acceptance in accordance with this contract, we will notify you and you must immediately notify your Builder's Risk insurer and obtain an endorsement that the policy or policies must not be cancelled or lapse on account of any such partial use or occupancy. You must obtain the endorsement prior to our occupation and use.

ADD: 7-3.6 Deductibles and Self-Insured Retentions. You are responsible for the payment of all deductibles and self-insured retentions. Disclose deductibles and self-insured retentions to the City at the time the evidence of insurance is provided.

ADD: 7-3.7 Reservation of Rights. We reserve the right, from time to time, to review your insurance coverage, limits, deductibles and self-insured retentions to determine if they are acceptable to the City. We will reimburse you, without overhead, profit, or any other markup, for the cost of additional premium for any coverage requested by the Engineer but not required by this contract.

ADD: 7-3.8 Notice of Changes to Insurance. You must notify the City 30 days prior to any material change to the policies of insurance provided under this contract.

ADD: 7-3.9 Excess Insurance. Policies providing excess coverage must follow the form of the primary policy or policies e.g., all endorsements.

7-4 WORKERS' COMPENSATION INSURANCE. DELETE in its entirety and SUBSTITUTE with the following:

7-4.1 Workers' Compensation Insurance and Employers Liability Insurance.

a) In accordance with the provisions of §3700 of the California Labor Code, you must provide at its expense Workers' Compensation Insurance and Employers Liability Insurance to protect you against all claims under applicable state workers compensation laws. The City, its elected officials, and employees will not be responsible for any claims in law or equity occasioned by your failure to comply with the requirements of this section.

b) Limits for this insurance must be not less than the following:

Workers' Compensation	Statutory Employers Liability
Bodily Injury by Accident	$1,000,000 each accident
Bodily Injury by Disease	$1,000,000 each employee
Bodily Injury by Disease	$1,000,000 policy limit

c) By signing and returning this contract you certify that you are aware of the provisions of §3700 of the Labor Code which require every employer to be insured against liability for worker's compensation or to undertake self-insurance in accordance with the provisions of that code and you will comply with such provisions before commencing the Work as required by § 1861 of the California Labor Code.

7-4.1.1 Waiver of Subrogation. The policy or policies must be endorsed to provide that the insurer will waive all rights of subrogation against the City, and its respective elected officials, officers, employees, agents, and representatives for losses paid under the terms of the policy or policies and which arise from work performed by the Named Insured for the City.

7-5 PERMITS, FEES, AND NOTICES. To the City Supplement, DELETE item e) in its entirety.

7-8.6 Water Pollution Control. ADD the following:

a) The Project is subject to the Storm Water Pollution control requirements listed on the Plans or as specified in these specifications.

b) For contracts subject to Construction General Permit (CGP), the Contractor's QSD shall verify the City's assessment prior to submittal through SMARTS.

c) The Contractor's attention is directed to Section 801, "WATER POLLUTION CONTROL" of these specifications for more information.

7-9 PROTECTION AND RESTORATION OF EXISTING IMPROVEMENTS. ADD the following:

In any emergency affecting the safety of persons or property, the Contractor shall act, at its discretion, to prevent threatened damage, injury or loss. Any change in Contract Price or Contract Time resulting from emergency work shall be determined as provided in SECTION 3, "CHANGES IN WORK."

7-10.1 Traffic and Access. To the City Supplement, DELETE the agency notification listing in its entirety and SUBSTITUTE with the following:

The Contractor shall notify Metropolitan Transit System (MTS), a minimum of 5 Working Days prior to excavation, construction, or traffic control affecting bus stops. The Contractor shall notify the remaining agencies a minimum of two 2 Working Days prior to construction activities affecting the agencies:

Fire Department Dispatch	(Street or alley closure)	(858) 573-1300
Police Department Traffic	(Street or alley closure)	(858) 495-7800
Street Division/Electrical	(Traffic signals)	(619) 527-7500
U.S. Navy	(32nd Street Naval Station)	(619) 556-1319
Underground Service Alert	(Any excavation)	(800) 422-4133
MTS	(Street Closure and Bus Stops)	(619) 238-0100 Ext 6451

7-10.6 Traffic Plate Bridging. To the City Supplement, DELETE in its entirety and SUBSTITUTE with the following:

Transverse or longitudinal cuts, voids, trenches, holes, and excavations in the right-of-way that cannot be properly completed within 1 Working Day shall be protected by adequately designed barricades and structural steel plates [plates] that will support legal vehicle loads in such a way as to preserve unobstructed traffic flow.

The Contractor shall secure approval, in advance, from authorities concerning the use of any bridging proposed on the Work.

Plates shall conform to the following:

a) The trench shall be adequately shored to support the bridging and traffic loads.

b) Plates shall be designed for HS 20-44 truck loading in accordance with Caltrans Bridge Design Specifications Manual.

c) For the minimum thickness of plates refer to Table 7-10.6(A):

Table 7-10.6(A) - Trench Width / Minimum Plate Thickness

Trench Width	Minimum Plate Thickness
10" (0.25 m)	1/2" (13 mm)
1'-11" (0.58 m)	3/4" (19 mm)
2'-7" (0.80 m)	7/8" (22 mm)
3'-5" (1.04 m)	1" (25 mm)
5'-3" (1.6 m)	1 1/4" (32 mm)

For spans greater than 5’-3" (1.6 m), a structural design shall be prepared by a California Registered Civil Engineer and approved by the Engineer.

d) Plates shall have a skid-resistant surface with a nominal Coefficient Of Friction (COF) of 0.35 as determined by California Test Method 342.

e) Plates shall extend a minimum of 12” (300 mm) beyond the edges of the trench.

f) Plates shall provide complete coverage to prevent any person, bicycle, motorcycle or motor vehicle from being endangered due to plate movement causing separations or gaps.

g) Plates shall be secured against movement or displacement by using adjustable cleats, shims, welding, or other devices, and shall be installed in a manner that will minimize noise as traffic drives over them. Plates shall be installed using either Method (1) or (2):

   i. Method 1 [For speeds greater than 45 mph (70 Km/hr)]: The pavement shall be cold planed to a depth equal to the thickness of the plate and to a width and length equal to the dimensions of the plate.

   ii. Method 2 [For Speeds less than 45 mph (70 Km/hr)]: Approach plate(s) and ending plate (if longitudinal placement) shall be attached to the roadway by a minimum of 2 dowels pre-drilled into the corners of the plate and drilled 2" (50 mm) into the pavement. Subsequent plates are butted to each other. Fine graded asphalt concrete shall be compacted to form ramps, maximum slope 8.5 % with a minimum 12" (305 mm) taper to cover all edges of the plates.

   Alternative installation method may be submitted in accordance with 2-5.3, “Submittals” for the Engineer’s approval.

h) The Contractor shall be responsible for maintenance of the plates, shoring, and asphalt concrete ramps or any other approved device used to secure the plates. The Contractor shall immediately mobilize necessary personnel and equipment after being notified by the Engineer, the City's station 38, or a member of the public of a repair needed e.g., plate movement, noise, anchors, and asphalt ramps. Failure to respond to the emergency request within 2 hours will be grounds for the City to perform necessary repairs that will be invoiced at actual cost including overhead or $500 per incident, whichever is greater. Failure by the Contractor to comply may result in automatic grounds suspension of permit, Contract, or both.

i) When plates are removed, any damage to the pavement shall be repaired with fine graded asphalt concrete mix or slurry seal satisfactory to the Engineer.

Payment for traffic plate bridging shall be included in the various Bid items unless a Bid Item has been provided for steel plate bridging.

7-15 INDEMNIFICATION AND HOLD HARMLESS AGREEMENT. To the City Supplement, DELETE in its entirety and SUBSTITUTE with the following:

ADD: 7-15 INDEMNIFICATION AND HOLD HARMLESS AGREEMENT. The Contractor shall defend, indemnify, protect, and hold harmless the City, its agents, officers, and employees, from and against all claims asserted, or liability established for damages or injuries to any person or property resulting from the Contractor’s action or failure to take the necessary measures to prevent such damages and injuries.

The Contractor shall be responsible for payment of any fines resulting from citations issued to the City by either the federal, state, or local environmental and safety enforcement agencies due to the Contractor's failure to abide by applicable safety, health, and environmental standards.

SECTION 8 - FACILITIES FOR AGENCY PERSONNEL

8-2 FIELD OFFICE FACILITIES. To the City Supplement, DELETE in its entirety.

PART 2 - CONSTRUCTION MATERIALS

SECTION 207 – PIPE

ADD: 207-17.2.3 Pipe Manufacturer. Pipe, fittings, couplings, and joints as manufactured or distributed by J-M Manufacturing Company shall not be used on this contract.

207-26.1.5 Polyvinyl Chloride Pipe 2" Only. To the City Supplement, DELETE in its entirety.

SECTION 216 – DETECTABLE WARNING TILES

216-1.2 Materials. To the City Supplement, DELETE in its entirety and SUBSTITUTE with the following:

Materials for DWT specified herein shall be per the City's Approved Materials List (AML). The tiles shall have the manufacturer's logo stamped permanently on the product with identifying information such as model number and type.

a) The Stainless Steel Cast in Place DWT shall be of 16 gauge Type 304L with an integral micro-texture non-slip surface stamped into the stainless steel plate on the top of the domes and in the field surface between the domes. It shall have an ultra violet stabilized coating.

b) Vitrified Polymer Composite (VPC) Cast in Place DWT shall be an epoxy polymer composition with an ultra violet stabilized coating employing aluminum oxide particles in the truncated domes. VPC Product shall be provided with a 5-year manufacturer written warranty form materials and installation.

c) For others materials and a complete listing of material physical property requirements refer to the City's AML.

ADD: PART 8 – ENVIRONMENTAL WORKS

SECTION 801 – WATER POLLUTION CONTROL

801-2.9 Post-Construction Requirements. To the City Supplement second paragraph, ADD the following:

The Contractor shall comply with the following post-construction requirements:

- **Inlet Markers**

END OF SUPPLEMENTARY SPECIAL PROVISIONS (SSP)

CITY OF SAN DIEGO'S MODIFICATIONS TO

SECTIONS 1 THROUGH 9 AND SECTIONS 12 AND 14 OF THE CALTRANS STANDARD SPECIFICATIONS AND ITS AMENDMENTS AND UPDATES

The work embraced herein shall be done in accordance with the Standard Specifications dated May 2006 and the Standard Plans dated May 2006, of the Department of Transportation insofar as the same may apply and these special provisions.

Amendments to the Standard Specifications set forth in these special provisions shall be considered as part of the Standard Specifications for the purposes set forth in Section 5-1.04, "Coordination and Interpretation of Plans, Standard Specifications and Special Provisions", of the Standard Specifications. Whenever either the term "Standard Specifications is amended" or the term "Standard Specifications are amended" is used in these special provisions, the indented text or table following the term shall be considered an amendment to the Standard Specifications. Conflicts shall be addressed as follows:

a) In case of conflict between such amendments and the Standard Specifications, the amendments shall take precedence over and be used in lieu of the conflicting portions.
b) In case of conflict between the Standard Specifications and these special provisions, these special provisions shall control.
c) If there is a conflict in the General Provisions i.e., between these special provisions and the City's standard specifications, the latter shall control.
d) If there is a conflict between the procedures and requirements described in Caltrans's Local Assistance Procedures Manual (LAPM) and the City's smigtandard specifications, the LAPM shall control.

Sections 1 through 9, Section 12, and Section 14 of the Standard Specifications dated May, 2006, State of California, Department of Transportation (Caltrans) are modified by the special provisions that follow.

SECTION 1 - DEFINITIONS AND TERMS (SPECIFICATIONS AND PLANS)

1-1.01 GENERAL – ADD the following:

Section 1 includes general rules of interpretation. Caltrans is gradually standardizing the style and language of the specifications. The new style and language includes:

1. Use of:

    1.1. Imperative mood
    1.2. Introductory modifiers
    1.3. Conditional clauses

2. Elimination of:

    2.1. Language variations
    2.2. Definitions for industry-standard terms
    2.3. Redundant specifications
    2.4. Needless cross-references

The use of this new style does not change the meaning of a specification not yet using this style. Sections 1 through 9 include general specifications applicable to every contract unless specified as applicable under certain conditions. The specifications are written to the Bidder before award and the Contractor after. Before award, interpret sentences written in the imperative mood as starting with "The Bidder must" and interpret "you" as "the Bidder" and "your" as "the Bidder's." After award, interpret sentences written in the imperative mood as starting with "The Contractor must" and interpret "you" as "the Contractor" and "your" as "the Contractor's."

Omission of "a," "an," and "the" is intentional. These articles have been omitted in some specifications for streamlining purposes. Unless an object or activity is specified to be less than the total, the quantity or amount is all of the object or activity. A plural term includes the singular. All items in a list apply unless the items are specified as choices. Headings are included for the purposes of organization and referencing. Inclusion of a heading with no related content, "Reserved," or "Not Used" does not indicate that no specification exists for that subject; applicable specifications may be covered in a general or referenced specification.

ADD: 1-1.031 ATTORNEY GENERAL - Wherever used in the Standard Specifications shall refer to City Attorney.

ADD: 1-1.081 CITY - The City of San Diego, a chartered municipal corporation of the State of California.

ADD: 1-1.082 CITY COUNCIL OR COUNCIL - The City Council of the City of San Diego, the governing body created by law and the awarding authority of the City of San Diego, acting either directly or through its duly appointed officials.

ADD: 1-1.083 MAYOR - Refer to Section 1-1.18, “Engineer.”

1-1.13 DEPARTMENT OF TRANSPORTATION OR DEPARTMENT – DELETE and SUBSTITUTE the following:

Whenever used in the Standard Specifications, refers to the City of San Diego, except when used in reference to test methods of, or to denote publications or designate the mailing address of an agency of the State of California.

1-1.15 DIRECTOR OF TRANSPORTATION OR DIRECTOR - DELETE and SUBSTITUTE the following:

Whenever used in the Standard Specifications refers to the Mayor or Designee.

ADD: 1-1.17 DIVISION OF MEASUREMENT STANDARDS - Wherever used in the Standard Specifications, shall refer to the Department of Agriculture - Weights and Measures of the County of San Diego.

ADD: 1-1.221 GENERAL PROVISIONS - Sections 1 through 9 (as modified herein) of the Standard Specifications dated May, 2006, State of California, Department of Transportation, and Part 1 of Standard Specifications for Public Works Construction and its City Supplement and Supplementary Special Provisions.

1-1.25 LABORATORY - DELETE and SUBSTITUTE the following:

The established laboratory authorized by Engineer to test materials used in the Work.

1-1.26 LIQUIDATED DAMAGES - DELETE and SUBSTITUTE the following:

The amount prescribed in the Specifications, pursuant to the authority of Public Cont Code §10226, to be paid to the City or to be deducted from any payments due or to become due the Contractor for each day's delay in completing the whole or any specified portion of the Work beyond the time allowed in these special provisions.

ADD: 1-1.27.1 NOTICE TO BIDDERS – A Contract Document that provides a general work description, Bidder and Bid specifications, and the time and location the City receives Bids. See Notice Inviting Bids and Instructions to Bidders.

1-1.39 STATE OF CALIFORNIA OR STATE – ADD the following:

As used in these specifications relative to the contract administration refers to the City of San Diego.

1-1.40 STATE CONTRACT ACT - DELETE and SUBSTITUTE the following:

Chapter 1, Division 2, of the Public Contract Code. The provisions of this act are not applicable to this contract.

ADD: 1-2.01 REFERENCES - Where Standard Specifications refer to the Special Provisions to describe the Work, interpret the reference as a reference to the Bid Item List, the Special Provisions, or both. Interpret a reference to a section of the Standard Specifications as a reference to the Standard Specifications as revised by any amendment, special provision, or both. A reference within parentheses to a law or regulation is included in the Contract for convenience only and is not a comprehensive listing of related laws and regulations. Lack of a reference does not indicate no related laws or regulations exist. Where the version of a referenced document is not specified, use the current version in effect on the date of the invitation to bid. A reference to a subsection includes the section's general specifications of which the subsection is a part. A code not specified as a Federal code is a California code.

SECTION 2. PROPOSAL REQUIREMENTS AND CONDITIONS

2-1.01 GENERAL – ADD the following:

The bidder's attention is directed to the provisions in Section 2, "Proposal Requirement and Conditions," of the Standard Specifications and these special provisions for the requirements and conditions which the bidder must observe in the preparation of and the submission of the bid.

The bidder's bond shall conform to the bond form in the Bid book for the project and shall properly fill out and executed.

The bidders's bond form included in the book may be used.

In conformance wiyth Public Contract Code Section 7106, a Noncollusion Affidavit is included in the Bid book. Signing the Bid book shall also constitute signature of the Noncollusion Affidavit.

The contractor, sub-recipient or subcontractor shall not discriminate on the basis of race, color, national origin, or sex in the performance of this contract. The Contractor shall carry out applicable requirements of Title 49 CFR (Code of Federal Regulations), Part 26 in the award and administration of US DOT-assisted contracts. Failure by the Contractor to carry out these rquiremetnts is a material breach of this contract, which may result in ther termination of this contract or such other remedy, as the recipient deems appropriate. Each subcontract signed by the bidder must include this assurance.

Failure of the bidder to fulfill therequirments of the Special Provisions for submittals required to the furnished afer big opening, including but not limited to escrowed bid documents, where applicable, may subject the bidder to a determination of the bidder's responsibility in the event it is the apparent low bidder on a future public work contracts.

ADD: 2-1.011 CITY's DBE PROGRAM – This contract is subject to state contract nondiscrimination and compliance requirements pursuant to Government Code, Section 12990.

The City of San Diego will not discriminate on the basis of race, color, national origin, or sex in the award and performance of any DOT-assisted contract or in the administration of its DBE Program or the requirements of 49 CFR Part 26. The recipient shall take all necessary and reasonable steps under 49 CFR Part 26 to ensure nondiscrimination in the award and administration of DOT-assisted contracts.

The City's DBE Program, as required by 49 CFR Part 26 and as approved by DOT, is incorporated by reference in this agreement. Implementation of this program is a legal obligation and failure to carry out its terms shall be treated as a violation of this agreement. Upon notification to the City of its failure to carry out its approved program, the Department may impose sanctions as provided for under Part 26 and may, in appropriate cases, refer the matter for enforcement under 18 U.S.C. 1001 and/or the Program Fraud Civil Remedies Act of 1986 (31 U.S.C. 3801 et seq.).

The Contractor or subcontractor shall not discriminate on the basis of race, color, national origin, or sex in the performance of this contract. The Contractor shall carry out applicable requirements of 49 CFR Part 26 in the award and administration of DOT assisted contracts. Failure by the Contractor to carry out these requirements is a material breach of this contract, which may result in the termination of this contract or such other remedy as the recipient deems appropriate. Each subcontract signed by the Bidder shall include this assurance.

Bidders shall be fully informed with respect to the requirements of the DBE Regulations. The DBE Regulations in their entirety are incorporated herein by this reference. Attention is directed to the following matters:

a) DBE shall be a small business concern as defined pursuant to Section 3 of U.S. Small Business Act and relevant regulations promulgated pursuant thereto;

b) DBE may participate as a prime contractor, subcontractor, joint venture partner with a prime or subcontractor, vendor of material or supplies, or as a trucking company;

c) DBE joint venture partner shall be responsible for specific contract items of work, or clearly defined portions thereof. Responsibility means actually performing, managing and supervising the work with its own forces. The DBE joint venture partner shall share in the capital contribution, control, management, risks and profits of the joint venture commensurate with its ownership interest;

d) DBE shall perform a commercially useful function, i.e., shall be responsible for the execution of a distinct element of the work and shall carry out its responsibility by actually performing, managing and supervising the work;

e) DBEs shall be certified by California Unified Certification Program (CUCP). Listings of DBEs certified by the CUCP are available from the following sources:

   i. The Caltrans "Civil Rights" web site at: http://www.dot.ca.gov/hq/bep.
   ii. The Caltrans DBE Directory. This Directory may be obtained from the Department of Transportation, Material Operations Branch, Publication Distribution Unit, 1900 Royal Oaks Drive, Sacramento, California 95815, Telephone: (916) 445-3520;

f) When reporting DBE participation, Bidders may count the cost of materials or supplies purchased from DBEs as follows:

   i. If the materials or supplies are obtained from a DBE manufacturer, 100% of the cost of the materials or supplies. A DBE manufacturer is a firm that operates or maintains a factory or establishment that produces, on the premises, the materials, supplies, articles, or equipment required under the contract and of the general character described by the specifications.
   ii. If the materials or supplies are purchased from a DBE regular dealer, count 60% of the cost of the materials or supplies. A DBE regular dealer is a firm that owns, operates or maintains a store, warehouse, or other establishment in which the materials, supplies, articles or equipment of the general character described by the specifications and required under the contract are bought, kept in stock, and regularly sold or leased to the public in the usual course of business. To be a DBE regular dealer, the firm shall be an established, regular business that engages, as its principal business and under its own name, in the purchase and sale or lease of the products in question. A person may be a DBE regular dealer in such bulk items as petroleum products, steel, cement, gravel, stone, or asphalt without owning, operating, or maintaining a place of business as provided in this paragraph F.2., if the person both owns and operates distribution equipment for the products. Any supplementing of regular dealers' own distribution equipment shall be by a long-term lease agreement and not on an ad hoc or contract-by-contract basis. Packagers, brokers, manufacturers' representatives, or other persons who

arrange or expedite transactions are not DBE regular dealers within the meaning of this paragraph F.2.

iii. If the DBE is neither a manufacturer nor a regular dealer, count only the entire amount of fees or commissions charged for assistance in the procurement of the materials and supplies, or fees or transportation charges for the delivery of materials or supplies required on a job site, provided the fees are reasonable and not excessive as compared with fees charged for similar services.

g) When reporting DBE participation, Bidders may count the participation of DBE trucking companies as follows:

i. 1. The DBE shall be responsible for the management and supervision of the entire trucking operation for which it is responsible on a particular contract.

ii. The DBE shall itself own and operate at least one fully licensed, insured, and operational truck used on the contract.

iii. The DBE receives credit for the total value of the transportation services it provides on the contract using trucks it owns, insures, and operates using drivers it employs.

iv. The DBE may lease trucks from another DBE firm including an owner-operator, who is certified as a DBE. The DBE who leases trucks from another DBE receives credit for the total value of the transportation services the lessee DBE provides on the contract.

v. The DBE may also lease trucks from a non-DBE firm including from an owner-operator. The DBE who leases trucks from a non-DBE is entitled to credit only for the fee or commission it receives as a result of the lease arrangement. The DBE does not receive credit for the total value of the transportation services provided by the lessee, since these services are not provided by a DBE;

vi. For the purposes of this paragraph G, a lease shall indicate that the DBE has exclusive use of and control over the truck. This does not preclude the leased truck from working for others during the term of the lease with the consent of the DBE, so long as the lease gives the DBE absolute priority for use of the leased truck. Leased trucks shall display the name and identification number of the DBE.

h) Bidders are encouraged to use services offered by financial institutions owned and controlled by DBEs.

i) The Contractor shall maintain records of all Joint Venture participation if this participation is all or a part of obtaining the DBE goals. Such records shall show the specific work actually performed by the DBE and the dollar amount actually received. Upon completion of the contract, a summary of these records shall be prepared and certified correct by the Contractor and Joint Venture.

j) The DBE Joint Venture participants in response to the DBE goals of this contract shall perform the work for which they are responsible unless prior written authorization is received from the Engineer.

k) Authorization to use other forces may be requested for the reasons listed in §5-1.13A, 1 - 6 above. The Contractor/Joint Venture shall not be entitled to any payment for work listed to be performed by the DBE joint venture which is not so performed unless prior written permission has been received from the Engineer.

2-1.015 FEDERAL LOBBYING RESTRICTIONS - §1352, Title 31, United States Code prohibits Federal funds from being expended by the recipient or any lower tier sub recipient of a Federal-aid contract to pay for any person for influencing or attempting to influence a Federal agency or Congress in connection with the awarding of any Federal-aid contract, the making of any Federal grant or loan, or the entering into of any cooperative agreement.
If any funds other than Federal funds have been paid for the same purposes in connection with this Federal-aid contract, the recipient shall submit an executed certification and, if required, submit a completed disclosure form as part of the bid documents.

A certification for Federal-aid contracts regarding payment of funds to lobby Congress or a Federal agency is included in the Bid book. Standard Form - LLL, "Disclosure of Lobbying Activities," with instructions for completion of the Standard Form is also included in the Bid book. Signing the Bid book shall constitute signature of the Certification.

The above referenced certification and disclosure of lobbying activities shall be included in each subcontract and any lower-tier contracts exceeding $100,000. All disclosure forms, but not certifications, shall be forwarded from tier to tier until received by the Engineer.

The Contractor, subcontractors and any lower-tier contractors shall file a disclosure form at the end of each calendar quarter in which there occurs any event that requires disclosure or that materially affects the accuracy of the information contained in any disclosure form previously filed by the Contractor, subcontractors and any lower-tier contractors. An event that materially affects the accuracy of the information reported includes:

a) A cumulative increase if $25,000 or more in the amount paid or expected to be paid for influencing or attempting to influence a covered Federal action; or

b) A change in the person(s) or individual(s) influencing or attempting to influence a covered Federal action; or

c) A change in the officer(s), employees(s), or Member(s) contacted to influence or attempt to influence a covered Federal Action.

2-1.02 DISADVANTAGED BUSINESS ENTERPRISE (DBE).-This project is subject to Title 49 CFR 26.13(b):

The contractor, sub recipient or subcontractor shall not discriminate on the basis of race, color, national origin, or sex in the performance of this contract. The contractor shall carry out applicable requirements of 49 CFR part 26 in the award and administration of DOT-assisted contracts. Failure by the contractor to carry out these requirements is a material breach of this contract, which may result in the termination of this contract or such other remedy as the recipient deems appropriate.
The Contractor shall take necessary and reasonable steps to ensure that DBEs have opportunity to participate in the contract (49 CFR 26).

To ensure there is equal participation of the DBE groups specified in 49 CFR 26.5, the City specifies a goal for Underutilized Disadvantaged Business Enterprises (UDBEs). UDBE is a firm that meets the definition of DBE and is a member of one of the following groups:

1. Black Americans
2. Native Americans

3. Asian-Pacific Americans
4. Women

References to DBEs include UDBEs, but references to UDBEs do not include all DBEs.
The Contractor shall make work available to UDBEs and select work parts consistent with available UDBE subcontractors and suppliers.

The Contractor shall meet the UDBE goal shown in the Contract Documents or demonstrate that you made adequate good faith efforts to meet this goal.

It is the Contractor's responsibility to verify that the UDBE firm is certified as DBE at date of bid opening. For a list of DBEs certified by the California Unified Certification Program, go to:

http://www.dot.ca.gov/hq/bep/find_certified.htm

Only UDBE participation will count towards the UDBE goal. DBE participation will count towards the Agency's Annual Anticipated DBE Participation Level and the California statewide goal.

Credit for materials or supplies the Contractor purchase from UDBEs counts towards the goal in the following manner:

1. 100 percent counts if the materials or supplies are obtained from a UDBE manufacturer.

2. 60 percent counts if the materials or supplies are obtained from a UDBE regular dealer.

3. Only fees, commissions, and charges for assistance in the procurement and delivery of materials or supplies count if obtained from a UDBE that is neither a manufacturer or regular dealer. 49 CFR 26.55 defines "manufacturer" and "regular dealer."

The Contractor will receive credit towards the goal if you employ a UDBE trucking company that performs a commercially useful function as defined in 49 CFR 26.55..

UDBE Commitment Submittal

Submit UDBE information on the "Local Agency Bidder-UDBE Commitment (Construction Contracts)," Exhibit 15-G(1), form included in the Contract Documents. If the form is not submitted with the bid, remove the form from the Contract Documents before submitting your bid.

If the UDBE Commitment form is not submitted with the bid, the apparent low bidder, the 2nd low bidder, and the 3rd low bidder must complete and submit the UDBE Commitment form to the City. UDBE Commitment form must be received by the City no later than 4:00 p.m. on the 4th business day after bid opening.

Other bidders do not need to submit the UDBE Commitment form unless the City requests it. If the City requests you to submit a UDBE Commitment form, submit the completed form within 4 business days of the request.

Submit written confirmation from each UDBE stating that it is participating in the contract. Include confirmation with the UDBE Commitment form. A copy of a UDBE's quote will serve as written confirmation that the UDBE is participating in the contract.

If you do not submit the UDBE Commitment form within the specified time, the City finds your bid nonresponsive.

Good Faith Efforts Submittal

If you have not met the UDBE goal, complete and submit the "UDBE Information - Good Faith Efforts," Exhibit 15-H, form with the bid showing that you made adequate good faith efforts to meet the goal. Only good faith efforts directed towards obtaining participation by UDBEs will be considered. If good faith efforts documentation is not submitted with the bid, it must be received by the City no later than 4:00 p.m. on the 4th business day after bid opening.

If your UDBE Commitment form shows that you have met the UDBE goal or if you are required to submit the UDBE Commitment form, you must also submit good faith efforts documentation within the specified time to protect your eligibility for award of the contract in the event the City finds that the UDBE goal has not been met.

Good faith efforts documentation must include the following information and supporting documents, as necessary:

1. Items of work you have made available to UDBE firms. Identify those items of work you might otherwise perform with its own forces and those items that have been broken down into economically feasible units to facilitate UDBE participation. For each item listed, show the dollar value and percentage of the total contract. It is your responsibility to demonstrate that sufficient work to meet the goal was made available to UDBE firms.

2. Names of certified UDBEs and dates on which they were solicited to bid on the project. Include the items of work offered. Describe the methods used for following up initial solicitations to determine with certainty if the UDBEs were interested, and the dates of the follow-up. Attach supporting documents such as copies of letters, memos, facsimiles sent, telephone logs, telephone billing statements, and other evidence of solicitation. You are reminded to solicit certified UDBEs through all reasonable and available means and provide sufficient time to allow UDBEs to respond.

3. Name of selected firm and its status as a UDBE for each item of work made available. Include name, address, and telephone number of each UDBE that provided a quote and their price quote. If the firm selected for the item is not a UDBE, provide the reasons for the selection.
4. Name and date of each publication in which you requested UDBE participation for the project. Attach copies of the published advertisements.

5. Names of agencies and dates on which they were contacted to provide assistance in contacting, recruiting, and using UDBE firms. If the agencies were contacted in writing, provide copies of supporting documents.

6. List of efforts made to provide interested UDBEs with adequate information about the plans, specifications, and requirements of the contract to assist them in responding to a solicitation. If you have provided information, identify the name of the UDBE assisted, the nature of the information provided, and date of contact. Provide copies of supporting documents, as appropriate.

List of efforts made to assist interested UDBEs in obtaining bonding, lines of credit, insurance, necessary equipment, supplies, and materials, excluding supplies and equipment that the UDBE subcontractor purchases or leases from the prime contractor or its affiliate. If such assistance is provided by you, identify the name of the UDBE assisted, nature of the assistance offered, and date. Provide copies of supporting documents, as appropriate.

8. Any additional data to support demonstration of good faith efforts.

The City may consider the UDBE commitments of the 2nd and 3rd bidders when determining whether the low bidder made good faith efforts to meet the UDBE goal.

2-1.03 EXAMINATION OF PLANS, SPECIFICATIONS, CONTRACT AND SITE OF WORK - ADD the following to the third paragraph:

Such inspection of records may be made at the City Engineering and Capital Projects Department.

2-1.05 PROPOSAL FORMS – DELETE in its entirety and SUBSTITUTE the following:

The City will furnish to each Bidder a standard proposal form, which when filled out and executed, may be submitted as Bid. Bids not presented on forms so furnished will be disregarded.

The proposal form is bound in a book together with the invitation to bid, these special provisions, and Contract. Neither the proposal form nor any other portion of said book shall be detached therefrom. The Proposal shall set forth the item prices and totals, in clearly legible figures, in the respective spaces provided, and shall be signed by the Bidder, who shall fill out all blanks in the Proposal form as therein required.

All proposals shall be submitted as directed in the invitation to bid under sealed cover bearing on the outside the name of the Bidder, his address, the name of the project for which the Bid is submitted and the appropriate State Contractor's License designation held by the Bidder. If forwarded by mail, the sealed envelope containing the Bid shall be enclosed in another envelope addressed as specified in the invitation to bid. Proposals which are not properly marked may be disregarded.

All proposal forms shall be obtained at the location given in the invitation to bid.

2-1.07 PROPOSAL GUARANTY - First paragraph, DELETE the last sentence and SUBSTITUTE the following:

Cash, a cashier's check, a certified check, or a Bidder's bond executed by an admitted surety insurer, made payable to the City of San Diego.

Delete the last paragraph and substitute the following:
A Bidder's bond will not be accepted unless it conforms to the bond form included in the Contract Documents and is properly filled out and executed. Upon request "Bidder's Bond" forms may be obtained from the City Purchasing and Contracting Department.

2-1.095 RELIEF OF BIDDERS - DELETE in its entirety and SUBSTITUTE the following:

Attention is directed to the provisions of Public Contract Code 5103, et seq concerning relief of Bidders and in particular to the requirement therein, that if the Bidder claims a mistake was made in

his Bid, the Bidder shall give the City written notice within five (5) days after the opening of the Bids of the alleged mistake, specifying in the notice in detail how the mistake occurred.

2-1.105 PREVIOUS DISQUALIFICATION, REMOVAL OR OTHER PREVENTION OF BIDDING - DELETE in its entirety.

2-1.108 COMPLIANCE WITH ORDERS OF THE NATIONAL LABOR RELATIONS BOARD - DELETE in its entirety.

ADD: 2-1.121 GUARANTY BONDS - A material guaranty for a period of 6 months from the date of acceptance for the following item(s) of work as designated in the Engineer's Estimate will be required and shall conform to the provisions in Section 2-1.12, "Material Guaranty," of the Standard Specifications. A guaranty form for this purpose is included in the proposal. The guaranty form contains the items to be covered.

The 2 contract bonds required by Section 3-1.02, "Contract Bonds," of the Standard Specifications may be reduced as provided in said Section 2-1.12.

Full compensation for furnishing the guaranty and bonds will be considered as included in the contract price or prices paid for the items of work involved and no additional compensation will be allowed therefor.

SECTION 3. AWARD AND EXECUTION OF CONTRACT

3-1.01 AWARD OF CONTRACT - DELETE the second paragraph and SUBSTITUTE the following:

The award of the contract, if it is awarded, will be to the lowest responsible Bidder whose proposal complies with all the requirements prescribed. Such award, if made, will be made to the lowest responsible Bidder within 120 days after the Bid opening; within 135 days to the second lowest responsible Bidder if the first does not execute the Contract; and within 150 days to the third lowest responsible Bidder if neither the first nor second execute the Contract. The periods of time specified above within which the award of Contract may be made shall be subject to extension for such further period as may be agreed upon in writing between the City and the Bidder concerned.

Failure of the Bidder to fulfill the requirements of the Special Provisions for submittals required to be furnished after Bid opening, including but not limited to escrowed Bid documents, where applicable, may subject the Bidder to a determination of the Bidder's responsibility in the event it is the apparent low Bidder on a future public works contract.

ADD the following after the last paragraph:

The lowest Bid will be determined, at the sole discretion of the City, by the base Bid alone or by the sum of the base Bid plus any combination of additive or deductive alternates that the City may select. Failure to submit a Bid on additive or deductive alternate selected by City shall be considered a non-responsive Bid.

The Contract shall be executed by the successful Bidder and shall be returned, together with the Contract bonds, to the City so that it is received within 5 days, not including Saturdays, Sundays and legal holidays, after the Bidder has received the Contract for execution. Failure to do so shall be just cause for forfeiture of the proposal guaranty. The executed contract documents shall be delivered to the following address:

Purchasing and Contracting Department
1200 Third Avenue, Suite 200
San Diego, CA 92101

The award of the contract, if it be awarded, will be to the lowest responsible bidder whose bid complies with all the requirements prescribed.

A "Local Agency Bidder-DBE Information (Construction Contracts), Exhibit 15-G2" form is included in the Contract Documents to be executed by the successful bidder. The purpose of the form is to collect data required under 49 CFR 26. Even if no DBE participation will be reported, the successful bidder must execute and return the form.

The successful bidder's "Local Agency Bidder- Information (Construction Contracts), Exhibit 15-G2" form should include the names, addresses and phone numbers of DBE firms that will participate, with a complete description of work or supplies to be provided by each, and the dollar value of each DBE transaction. When 100 percent of a contract item of work is not to be performed or furnished by a DBE, a description of the exact portion of that work to be performed or furnished by that DBE should be included in the DBE information, including the planned location of that work. A successful bidder certified as a DBE should describe the work it has committed to performing with its own forces as

well as any other work that it has committed to be performed by DBE subcontractors, suppliers and trucking companies.

The successful bidder is encouraged to provide written confirmation from each DBE that the DBE is participating in the contract. A copy of a DBE's quote will serve as written confirmation that the DBE is participating in the contract. If a DBE is participating as a joint venture partner, the successful bidder is encouraged to submit a copy of the joint venture agreement.

The "Local Agency Bidder-DBE Information (Construction Contracts), Exhibit 15-G2" form shall be completed and returned to the City by the successful bidder with the executed contract and contract bonds.

Attention is directed to Section 5, "Federal Requirements (American Recovery and Reinvestment Act)," of these special provisions.

ADD: 3-1.02 DATA UNIVERSAL NUMBERING SYSTEM (D-U-N-S) NUMBER

For the purpose of complying with the American Recovery and Reinvestment Act of 2009, the successful bidder must provide the Department a D-U-N-S number.

Complete and sign the Data Universal Numbering System (D-U-N-S) Number form included in the contract documents. This form must be submitted with the executed contract.

If your company does not have a D-U-N-S number, you can obtain one by contacting Dun & Bradstreet at: http://dnb.com/us/

If you fail to submit this information with the executed contract, the City will not approve the contract.

3-1.02 CONTRACT BONDS - DELETE the first and second paragraphs and SUBSTITUTE the following:

The successful Bidder shall furnish a surety bond in an amount equal to 100% of the Contract Price as security for the faithful performance of the contract, and shall furnish a separate surety bond in an amount for not less than 100% of the Contract Price as security for the payment of all persons performing labor and furnishing materials in connection with the Contract as specified by Chapter 5 (commencing at §3225) and Chapter 7 (commencing at §3247), Title 15, Part 4, Division 3, of the California Civil Code. The aforesaid bonds shall be satisfactory to, and on the forms provided by, the City.

3-1.03 EXECUTION OF CONTRACT - DELETE this section in its entirety and SUBSTITUTE the following:

The contract shall be signed by the successful Bidder and returned together with the contract bonds, certificates of insurance, and other forms required in the proposal within 5 Working Days after the Bidder has received notice that the contract has been awarded.

SECTION 4. SCOPE OF WORK (BEGINNING OF WORK, TIME OF COMPLETIONAND LIQUIDATED DAMAGES)

Attention is directed to the provisions in the Part 1 of the GREENBOOK and the City Supplement and Supplementary Special Provisions of the Specifications and these special provisions for determination of the Contract Time and the liquidated damages amounts.

This work shall be diligently prosecuted to completion before the expiration of 220 WORKING DAYS
The Contractor shall begin work within 15 days after the NTP.

Liquidated Damages are based on the estimated cost of field construction engineering. In special cases, liquidated damages greater than the estimated field construction engineering cost may be specified provided detailed reasons are given to support the greater amount.

The Contractor shall pay to the City of San Diego, the sum of $ 1,000 per day, for each and every calendar day's delay in finishing the work in excess of the number of working days prescribed above.

SECTION 5 GENERAL

SECTION 5-1. MISCELLANEOUS

5-1.01 LABOR NONDISCRIMINATION. -- Attention is directed to the following Notice that is required by Chapter 5 of Division 4 of Title 2, California Code of Regulations.

NOTICE OF REQUIREMENT FOR NONDISCRIMINATION PROGRAM (GOV. CODE, SECTION 12990)

Your attention is called to the "Nondiscrimination Clause", set forth in Section 7-1.01A(4), "Labor Nondiscrimination," of the Standard Specifications, which is applicable to all nonexempt state contracts and subcontracts, and to the "Standard California Nondiscrimination Construction Contract Specifications" set forth therein. The Specifications are applicable to all nonexempt state construction contracts and subcontracts of $5,000 or more.

5-1.02 BUY AMERICA REQUIREMENTS. -- Attention is directed to the "Buy America" requirements of the Surface Transportation Assistance Act of 1982 (Section 165) and the Intermodal Surface Transportation Efficiency Act of 1991 (ISTEA) Sections 1041(a) and 1048(a), and the regulations adopted pursuant thereto. In conformance with the law and regulations, all manufacturing processes for steel and iron materials furnished for incorporation into the work on this project shall occur in the United States; with the exception that pig iron and processed, pelletized and reduced iron ore manufactured outside of the United States may be used in the domestic manufacturing process for such steel and iron materials. The application of coatings, such as epoxy coating, galvanizing, painting, and other coating that protects or enhances the value of steel or iron materials shall be considered a manufacturing process subject to the "Buy America" requirements.

A Certificate of Compliance, conforming to the provisions in Section 6-1.07, "Certificates of Compliance," of the Standard Specifications, shall be furnished for steel and iron materials. The certificates, in addition to certifying that the materials comply with the specifications, shall specifically certify that all manufacturing processes for the materials occurred in the United States, except for the above exceptions.

The requirements imposed by the law and regulations do not prevent a minimal use of foreign steel and iron materials if the total combined cost of the materials used does not exceed one-tenth of one percent (0.1 percent) of the total contract cost or $2,500, whichever is greater. The Contractor shall furnish the Engineer acceptable documentation of the quantity and value of the foreign steel and iron prior to incorporating the materials into the work.

5-1.03 REMOVAL OF ASBESTOS AND HAZARDOUS SUBSTANCES. -- When the presence of asbestos or hazardous substances are not shown on the plans or indicated in the specifications and the Contractor encounters materials which the Contractor reasonably believes to be asbestos or a hazardous substance as defined in Section 25914.1 of the Health and Safety Code, and the asbestos or hazardous substance has not been rendered harmless, the Contractor may continue work in unaffected areas reasonably believed to be safe. The Contractor shall immediately cease work in the affected area and report the condition to the Engineer in writing.

In conformance with Section 25914.1 of the Health and Safety Code, removal of asbestos or hazardous substances including exploratory work to identify and determine the extent of the asbestos or hazardous substance will be performed by separate contract.

If delay of work in the area delays the current controlling operation, the delay will be considered a right of way delay and the Contractor will be compensated for the delay in conformance with the provisions in Section 8-1.09, "Right of Way Delays," of the Standard Specifications.

5-1.04 SUBCONTRACTOR AND DBE RECORDS

The Contractor shall maintain records showing the name and business address of each first-tier subcontractor. The records shall also show the name and business address of every DBE subcontractor, DBE vendor of materials and DBE trucking company, regardless of tier. The records shall show the date of payment and the total dollar figure paid to all of these firms. DBE prime contractors shall also show the date of work performed by their own forces along with the corresponding dollar value of the work.

Upon completion of the contract, a summary of these records shall be prepared on "Final Report-Utilization of Disadvantaged Business Enterprises (DBE), First Tier Subcontractors" Form CEM-2402(F) and certified correct by the Contractor or the Contractor's authorized representative, and shall be furnished to the Engineer. The form shall be furnished to the Engineer within 90 days from the date of contract acceptance. The amount of $10,000 will be withheld from payment until a satisfactory form is submitted.

Prior to the fifteenth of each month, the Contractor shall submit documentation to the Engineer showing the amount paid to DBE trucking companies. The Contractor shall also obtain and submit documentation to the Engineer showing the amount paid by DBE trucking companies to all firms, including owner-operators, for the leasing of trucks. If the DBE leases trucks from a non-DBE, the Contactor may count only the fee or commission the DBE receives as a result of the lease arrangement.

The Contractor shall also obtain and submit documentation to the Engineer showing the truck number, owner's name, California Highway Patrol CA number, and if applicable, the DBE certification number of the owner of the truck for all trucks used during that month. This documentation shall be submitted on "Monthly DBE Trucking Verification" Form CEM-2404(F).

5-1.05 DBE CERTIFICATION STATUS

If a DBE subcontractor is decertified during the life of the project, the decertified subcontractor shall notify the Contractor in writing with the date of decertification. If a subcontractor becomes a certified DBE during the life of the project, the subcontractor shall notify the Contractor in writing with the date of certification. The Contractor shall furnish the written documentation to the Engineer.

Upon completion of the contract, "Disadvantaged Business Enterprises (DBE) Certification Status Change" Form CEM-2403(F) indicating the DBEs' existing certification status shall be signed and certified correct by the Contractor. The certified form shall be furnished to the Engineer within 90 days from the date of contract acceptance.

5-1.06 PERFORMANCE OF SUBCONTRACTORS

The subcontractors listed by you in Bid book shall list therein the name and address of each subcontractor to whom the bidder proposes to subcontract portions of the work in an amount in excess of one-half of one percent of the total bid or $10,000, whichever is greater, in accordance with the Subletting and Subcontracting Fair Practices Act, commencing with Section 4100 of the Public Contract Code. The bidder’s attention is invited to other provisions of the Act related to the imposition of penalties for a failure to observe its provisions by using unauthorized subcontractors or by making unauthorized substitutions.

UDBEs must perform work or supply materials as listed in the “Local Agency Bidder - UDBE Commitment” form specified under Section 2, "Bidding," of these special provisions. Do not terminate a UDBE listed subcontractor for convenience and perform the work with your own forces or obtain materials from other sources without prior written authorization from the Agency.

The Agency grants authorization to use other forces or sources of materials for requests that show any of the following justifications:

1. Listed UDBE fails or refuses to execute a written contract based on plans and specifications for the project.

2. You stipulate a bond is a condition of executing the subcontract and the listed UDBE fails to meet your bond requirements.

3. Work requires a contractors license and listed UDBE does not have a valid license under Contractors License Law.

4. Listed UDBE fails or refuses to perform the work or furnish the listed materials.

5. Listed UDBE's work is unsatisfactory and not in compliance with the contract.

6. Listed UDBE delays or disrupts the progress of the work.

7. Listed UDBE becomes bankrupt or insolvent.

If a listed UDBE subcontractor is terminated, you must make good faith efforts to find another UDBE subcontractor to substitute for the original UDBE. The substitute UDBE must perform at least the same amount of work as the original UDBE under the contract to the extent needed to meet the UDBE goal.

The substitute UDBE must be certified as a DBE at the time of request for substitution.

The Agency does not pay for work or material unless it is performed or supplied by the listed UDBE, unless the UDBE is terminated in accordance with this section.

5-1.07 SUBCONTRACTING

No subcontract releases the Contractor from the contract or relieves the Contractor of their responsibility for a subcontractor's work.

If the Contractor violates Pub Cont Code § 4100 et seq., the City of San Diego may exercise the remedies provided under Pub Cont Code § 4110. The City of San Diego may refer the violation to the Contractors State License Board as provided under Pub Cont Code § 4111.

The Contractor shall perform work equaling at least 30 percent of the value of the original total bid with the Contractor’s own employees and equipment, owned or rented, with or without operators.

Each subcontract must comply with the contract.

Each subcontractor must have an active and valid State contractor's license with a classification appropriate for the work to be performed (Bus & Prof Code, § 7000 et seq.).

Submit copies of subcontracts upon request by the Engineer.

Before subcontracted work starts, submit a Subcontracting Request form.

Do not use a debarred contractor; a current list of debarred contractors is available at the Department of Industrial Relations' Web site.

Upon request by the Engineer, immediately remove and not again use a subcontractor who fails to prosecute the work satisfactorily.

Each subcontract and any lower tier subcontract that may in turn be made shall include the "Required Contract Provisions Federal-Aid Construction Contracts" in Section 14 of these special provisions. Noncompliance shall be corrected. Payment for subcontracted work involved will be withheld from progress payments due, or to become due, until correction is made. Failure to comply may result in termination of the contract.

5-1.08 PROMPT PROGRESS PAYMENT TO SUBCONTRACTORS

A prime contractor or subcontractor shall pay any subcontractor not later than 10 days of receipt of each progress payment in accordance with the provision in Section 7108.5 of the California Business and Professions Code concerning prompt payment to subcontractors. The 10 days is applicable unless a longer period is agreed to in writing. Any delay or postponement of payment over 30 days may take place only for good cause and with the agency's prior written approval. Any violation of Section 7108.5 shall subject the violating contractor or subcontractor to the penalties, sanction and other remedies of that section. This requirement shall not be construed to limit or impair any contractual, administrative, or judicial remedies otherwise available to the contractor or subcontractor in the event of a dispute involving late payment or nonpayment by the prime contractor, deficient subcontract performance, or noncompliance by a subcontractor. This clause applies to both DBE and non-DBE subscontractor. This clause applies to both DBE and non-DBE subscontractor.

5-1.09 PROMPT PAYMENT OF FUNDS WITHHELD TO SUBCONTRACTORS

The agency shall hold retainage from the prime contractor and shall make prompt and regular incremental acceptances of portions, as determined by the agency, of the contract work, and pay retainage to the prime contractor based on these acceptances. The prime contractor, or subcontractor, shall return all monies withheld in retention from a subcontractor within 30 days after receiving payment for work satisfactorily completed and accepted including incremental acceptances of portions of the contract work by the agency. Federal law (49CFR26.29) requires that any delay or postponement of payment over 30 days may take place only for good cause and with the agency's prior written approval. Any violation of this provision shall subject the violating prime contractor or subcontractor to the penalties, sanctions and other remedies specified in Section 7108.5 of the Business and Professions Code. These requirements shall not be construed to limit or impair any contractual, administrative, or judicial remedies otherwise available to the prime contractor or subcontractor in the event of a dispute involving late payment or nonpayment by the prime contractor, deficient subcontract performance, or noncompliance by a subcontractor.

*- This clause applies to both DBE and non-DBE Subcontractors.

5-1.10 FEDERAL REQUIREMENTS (AMERICAN RECOVERY AND REINVESTMENT ACT)

Under the American Recovery and Reinvestment Act (ARRA) of 2009, 9 USC § 902:

SEC. 902. ACCESS OF GOVERNMENT ACCOUNTABILITY OFFICE.

(a) ACCESS.-Each contract awarded using funds made available in this Act shall provide that the Comptroller General and his representatives are authorized.

(1) to examine any records of the contractor or any of its subcontractors, or any State or local agency administering such contract, that directly pertain to, and involve transactions relating to, the contract or subcontract; and

(2) to interview any officer or employee of the contractor or any of its subcontractors, or of any State or local government agency administering the contract, regarding such transactions.

(b) RELATIONSHIP TO EXISTING AUTHORITY.—Nothing in this section shall be interpreted to limit or restrict in any way any existing authority of the Comptroller General.

Under ARRA of 2009, 9 USC § 1515(a):

SEC. 1515. ACCESS OF OFFICES OF INSPECTOR GENERAL TO CERTAIN RECORDS AND EMPLOYEES.

(a) ACCESS.-With respect to each contract or grant awarded using covered funds, any representative of an appropriate inspector general appointed under section 3 or 8G of the Inspector General Act of 1978 (5 U.S.C. App.), is authorized-

(1) to examine any records of the contractor or grantee, any of its subcontractors or subgrantees, or any State or local agency administering such contract, that pertain to, and involve transactions relating to, the contract, subcontract, grant, or subgrant; and

(2) to interview any officer or employee of the contractor, grantee, subgrantee, or agency regarding such transactions.

(b) RELATIONSHIP TO EXISTING AUTHORITY.-Nothing in this section shall be interpreted to limit or restrict in any way any existing authority of an inspector general.

Immediately notify the Engineer if you have been contacted by the U.S. Comptroller, Inspector General, or their representatives.

5-1.11 MONTHLY EMPLOYMENT REPORT (AMERICAN RECOVERY AND REINVESTMENT ACT)

For the purpose of complying with the American Recovery and Reinvestment Act of 2009, submit a completed Monthly Employment Report form by the 5th of each month for the previous month. For the form, go to: http://www.dot.ca.gov/hq/construc/forms.htm

If you fail to submit a complete and accurate report, the Department withholds 2 percent of the monthly progress estimate. The Department does not withhold more than $10,000 or less than $1,000.

The Department releases the withhold upon submission of the completed form.

5-1.12 PARTNERING -- The City of San Diego will promote the formation of a "Partnering" relationship with the Contractor in order to effectively complete the contract to the benefit of both parties. The purpose of this relationship will be to maintain cooperative communication and mutually resolve conflicts at the lowest possible management level.
The Contractor may request the formation of such a "Partnering" relationship by submitting a request in writing to the Engineer after approval of the contract. If the Contractor's request for "Partnering" is approved by the Engineer, scheduling of a "Partnering" workshop, selecting the "Partnering" facilitator and workshop site, and other administrative details shall be as agreed to by both parties.

The costs involved in providing a facilitator and a workshop site will be borne equally by the City of San Diego and the Contractor. The Contractor shall pay all compensation for the wages and expenses of the facilitator, and of the expenses for obtaining the workshop site. The State's share of such costs will be reimbursed to the Contractor in a change order written by the Engineer. Markups will not be added. All other costs associated with the "Partnering" relationship will be borne separately by the party incurring the costs.

The establishment of a "Partnering" relationship will not change or modify the terms and conditions of the contract and will not relieve either party of the legal requirements of the contract.

5-1.13 PAYMENTS
Attention is directed to Section 9-1.06, "Partial Payments," and 9-1.07, "Payment after Acceptance", of the Standard Specifications and these special provisions.

For the purpose of making partial payments pursuant to Section 9-1.06, "Partial Payments," of the Standard Specifications, the amount set forth for the contract items of work hereinafter listed shall be deemed to be the maximum value of the contract item of work, which will be recognized for progress payment purposes.

Clearing and Grubbing	$ _____
Develop Water Supply	$ _____
Roadside Clearing	$ _____

After acceptance of the contract pursuant to the provisions in Section 7-1.17, "Acceptance of Contract," of the Standard Specifications, the amount, if any, payable for a contract item of work in excess of the maximum value for progress payment purposes hereinabove listed for the item, will be included for payment in the first estimate made after acceptance of the contract.

No partial payment will be made for any materials on hand which are furnished but not incorporated in the work.

In determining the partial payments to be made to the Contractor, only the following listed materials will be considered for inclusion in the payment as materials furnished but not incorporated in the work:

_____
_____
_____

Final pay items shall be estimated and paid for in accordance with Section 9-1.05, "Final Pay Items", of the Standard Specifications.

In determining the partial payments to be made to the Contractor, only the following listed materials will be considered for inclusion in the payment as materials furnished but not incorporated in the work:

A. Furnish precast girders
B. Bar reinforcing steel

5-1.14 TRAINING
For the Federal training program, the number of trainees or apprentices is 7.

5-1.15 STATISTICAL TESTING
Requirements for statistical testing will not apply to the Work.

5-1.16 SURFACE MINING AND RECLAMATION ACT
Imported borrow or aggregate material must come from a surface mine permitted under the Surface Mining and Reclamation Act of 1975 (SMARA), Pub Res Code § 2710, et seq., or from an exempt site.

The Department of Conservation, Office of Mine Reclamation maintains a list of permitted mine sites. For the list of permitted sites, go to:

http://www.conservation.ca.gov/omr/ab_3098_list

If you import borrow or aggregate material from a surface mine not on this list, submit proof the mine is exempt from SMARA.

5-1.17 PUBLIC CONVENIENCE AND SAFETY
Attention is directed to Sections 7-1.08, "Public Convenience," and 7-1.09, "Public Safety," of the Standard Specifications and to "Maintaining Traffic" of these special provisions. At all times during construction the contractor shall provide convenient and safe public access to the right-of-way. No construction materials or equipment shall be placed on any sidewalk or path in the project. All contractors, suppliers and service providers entering the project area shall comply with all Federal, State and Local laws with respect to safety of children in a school zone.

All vehicles involved with the project, construction or otherwise, shall not exceed 15 miles per hour while traversing Shoal Creek Drive. Traffic safety personnel, devices and other related items shall be used to restrict traffic speed.

The contractor shall provide convenient and safe public access to Shoal Creek Elementary School at all times during construction. The sidewalk along the west side of Shoal Creek Drive shall remain open for the duration of the project except during nighttime road closures. The sidewalk on the east side of Shoal Creek Drive within the project limits and the sidewalk on both sides of Ted Williams Parkway east of Shoal Creek Drive and west of Highland Ranch Drive shall be closed to pedestrians for the duration of construction. The construction area, including the contractor staging area and temporary grading area, shall be contained with temporary fencing (8 feet tall) as described in these special provisions. Temporary fencing shall include windscreen (privacy screen) for the entire length

and height of the fencing limits. Any and all gates provided within the limits of the temporary fencing shall remain locked at all times except during actual ingress and egress. Temporary fencing relocated to facilitate construction shall be replaced and secured at the end of each work shift.

Appropriate barriers shall be erected along all sidewalks, pathways and crossings to the extent necessary to protect children from construction related facilities or occurrences.
No vehicle ingress or egress into the Staging Area at the southwest corner of Shoal Creek Drive and Ted Williams Parkway shall be permitted; (i) between 7:30 a.m. and 8:30 a.m. Monday through Friday; and (ii) between 2:15pm and 3:15pm Monday through Thursday and between 12:30 p.m. and 1:30 p.m. on Fridays. These may need to be varied on occasion depending on school schedules.

All contractors, suppliers and service providers entering the project shall designate a specific contact person that will be available for coordination in the event any of the above provisions need to be modified or are deemed to be out of compliance. The contact person's information shall be provided to Carmel Mountain Ranch Residential Community Association at c/o Ms. Lee Leibenson, Walters Management, 9655 Chesapeake Dr., Suite 300, San Diego, CA, 92123, (858) 576-5557, lleibenson@waltersmanagment.com, and Libby Keller, Principal, Shoal Creek Elementary School, (858) 613-9080, ekeller@powayusd.com.

No hazardous materials (as defined by any federal, state or local law as being hazardous, toxic or otherwise harmful to human beings) shall be used or stored in the temporary construction staging area and the temporary grading area as defined by respective permits.

5-1.18 NOISE CONTROL
This section applies to equipment on the project or associated with the project, including trucks, transit mixers, stationary equipment, and transient equipment.

Do not operate construction equipment or run the equipment engines from 7:00 p.m. to 7:00 a.m. or on Sundays except you may operate equipment within the project limits during these hours to:

1. Service traffic control facilities
2. Service construction equipment

CALTRANS STANDARD SPECIFICATIONS (13-95)

SECTION 13 BLANK

Replace Section 13 with:

SECTION 13 CONSTRUCTION DETAILS

13-1 GENERAL

13-1.01 ORDER OF WORK

Order of work shall conform to the provisions in Section 5-1.05, "Order of Work," of the Standard Specifications and these special provisions.

Attention is directed to "Miscellaneous Concrete Construction" of these special provisions regarding constructing a 2' x 2' test panel prior to constructing curb ramps with detectable warning surfaces.

Prior to commencement of the traffic signal functional test at any location, all items of work related to signal control shall be completed and all roadside signs, pavement delineation, and pavement markings shall be in place at that location.

At the end of each working day if a difference in excess of 0.15 foot exists between the elevation of the existing pavement and the elevation of excavations within 8 feet of the traveled way, material shall be placed and compacted against the vertical cuts adjacent to the traveled way. During excavation operations, native material may be used for this purpose; however, once placing of the structural section commences, structural material shall be used. The material shall be placed to the level of the elevation of the top of existing pavement and tapered at a slope of 4:1 (horizontal:vertical) or flatter to the bottom of the excavation. Full compensation for placing the material on a 4:1 slope, regardless of the number of times the material is required, and subsequent removing or reshaping of the material to the lines and grades shown on the plans shall be considered as included in the contract price paid for the materials involved and no additional compensation will be allowed therefor. No payment will be made for material placed in excess of that required for the structural section.

At least 60 days before planting the plants, furnish the Engineer a statement from the vendor that the order for the plants required for this contract, including inspection plants, has been received and accepted by the vendor. The statement from the vendor must include the names, sizes, and quantities of plants ordered and the anticipated date of delivery.

Place orders for replacement plants with the vendor at the appropriate time so that the roots of the replacement plants are not in a root-bound condition.

Before the start of irrigation work, check for deficiencies of existing plants that are to remain in place as specified under "Maintain Existing Planted Areas" of these special provisions.

Locate existing irrigation water line crossovers and conduits before performing work on the irrigation system as specified under "Locate Existing Crossover and Conduits" of these special provisions.

Unless otherwise shown on the plans or specified in these special provisions, conduits to be jacked or drilled or installed by the open trench method for water line crossovers and sprinkler control crossovers must be installed before the installation of other pipe supply lines.

13-1.02 EROSION CONTROL

The work performed in connection with Erosion Control shall conform to the provisions in Section 20, "Erosion Control and Highway Planting," of the Standard Specifications and these special provisions.

The contract lump sum price paid for Erosion Control shall include full compensation for furnishing all labor, materials, tools, equipment, and incidentals, and for doing all the work related to Erosion Control, complete in place, including all the work involved in spill prevention and control, material management, waste management, non-storm water management, and dewatering and identifying, sampling, testing, handling, and disposing of hazardous waste, removing the concrete washout facility, including removal and disposal of concrete waste, all the work involved in constructing the temporary check dams and temporary fiber rolls including removal of materials, cleanup and disposal of retained sediment and debris, and backfilling and repairing holes, depressions and other ground disturbance, all the work involved in constructing temporary construction entrance including removal of temporary construction entrance, all the work involved in constructing the temporary drainage inlet protection including removal of materials, cleanup and disposal of retained sediment and debris, and backfilling and repairing holes, depressions and other ground disturbance, as shown on the plans, as specified in the Standard Specifications and these special provisions, and as directed by the Engineer.

13-1.03 CONSTRUCTION SITE MANAGEMENT

GENERAL SUMMARY

This work includes controlling potential sources of water pollution before they come in contact with storm water systems or watercourses.

Control material pollution and manage waste and non-storm water at the job site by implementing effective handling, storage, use, and disposal practices.

For information on documents under these special provisions, refer to the Department's Preparation Manual, Dewatering Guide, and BMP Manual.

Preparation Manual, Dewatering Guide, and BMP Manual are available from the Department's Construction Storm Water and Water Pollution Control web site at:

http://www.dot.ca.gov/hq/construc/stormwater/stormwater1.htm

Definitions

BMP Manual: The Department's Construction Site Best Management Practices (BMP) Manual.

Dewatering Guide: The Department's Field Guide to Construction Site Dewatering.

Minor spills: Small quantities of oil, gasoline, paint, or other material that are small enough to be controlled by a first responder upon discovery of the spill.

Preparation Manual: The Department's Storm Water Pollution Prevention Plan (SWPPP) and Water Pollution Control Program (WPCP) Preparation Manual.

Semi-significant spills: Spills that can be controlled by a first responder with help from other personnel.

Significant or hazardous spills: Spills that cannot be controlled by construction personnel.

Submittals

Submit the following:

1. Material Safety Data Sheet (MSDS) at least 5 days before material is used or stored
2. Monthly inventory records for material used or stored
3. Stormwater training:

    3.1. Include training dates and subject for employees and subcontractors with SWPPP or WPCP. Include dates and subject for ongoing training, including tailgate meetings.

3.2. Employee training records:

3.2.1. Within 5 days of SWPPP or WPCP approval for existing employees
3.2.2. Within 5 days of training for new employees
3.2.3. At least 5 days before subcontractors begin work for subcontractor's employees

4. Manifest forms for hazardous waste disposal within 5 days of transport and disposal
5. Copy of written approval to discharge into a sanitary sewer system at least 5 days before beginning discharge activities

Quality Control and Assurance

Train all employees and subcontractors in these subjects:

1. Material pollution prevention and control
2. Waste management
3. Non-storm water management
4. Identifying and handling hazardous substances
5. Potential dangers to humans and the environment from spills and leaks or exposure to toxic or hazardous substances

Training must take place before starting work on this job. New employees must receive the complete training before starting work on this job. Conduct weekly meetings to discuss and reinforce spill prevention and control; material delivery, storage, use, and disposal; waste management; and non-storm water management procedures.

CONSTRUCTION

Spill Prevention and Control

Implement spill and leak prevention procedures for chemicals and hazardous substances stored on the job site.

As soon as it is safe, contain and clean up spills of petroleum products, sanitary and septic waste substances listed under CFR Title 40, Parts 110, 117, and 302.

Minor Spills: Clean up minor spills using these procedures:

1. Contain spread of the spill
2. Recover spilled material using absorption
3. Clean contaminated area
4. Dispose of contaminated material promptly and properly

Semi-significant Spills: Clean up semi-significant spills immediately using these procedures:

1. Contain spread of the spill
2. Recover spilled material using absorption where the spill occurs on paved or an impermeable surface
3. Contain the spill with an earthen dike and dig up contaminated soil for disposal where the spill occurs on soil
4. When the spill occurs during precipitation, cover the spill with plastic or other material to prevent contaminated runoff
5. Dispose of contaminated material promptly and properly

Significant or Hazardous Spills: Immediately notify qualified personnel of significant or hazardous spills. Take these steps:

1. Construction personnel must not attempt to cleanup the spill until qualified staff have arrived
2. Notify the Engineer and follow up with a written report
3. Obtain the services of a spills contractor or hazardous material team immediately
4. Notify the local emergency response team by dialing 911 and county officials at the emergency phone numbers kept on the job site
5. Notify the Governor's Office of Emergency Services Warning Center at (805) 852-7550
6. Notify the National Response Center at (800) 424-8802 regarding spills of Federal reportable quantities under CFR Title 40, Parts 110, 119, and 302
7. Notify other agencies as appropriate, including:

    7.1. Fire Department
    7.2. Public Works Department
    7.3. Coast Guard
    7.4. Highway Patrol
    7.5. City Police or County Sheriff Department
    7.6. Department of Toxic Substances
    7.7. California Division of Oil and Gas
    7.8. Cal OSHA
    7.9. Regional Water Resources Control Board

Report minor, semi-significant, and significant spills to the WPC (Water Pollution Control) manager. WPC manager must notify the Engineer immediately. WPC manger must oversee and enforce proper spill prevention and control measures.

Prevent spills from entering storm water runoff before and during cleanup. Spills must not be buried or washed with water.

Keep material or waste storage areas clean, well organized, and equipped with enough cleanup supplies for the material being stored.

Material Management

General

Material must be delivered, used, and stored for this job in a way that minimizes or eliminates discharge of material into the air, storm drain systems, or watercourses.

Implement the practices described in this section while taking delivery of, using, or storing these materials:

1. Hazardous chemicals including:

    1.1. Acids
    1.2. Lime
    1.3. Glues
    1.4. Adhesives
    1.5. Paints
    1.6. Solvents
    1.7. Curing compounds

2. Soil stabilizers and binders
3. Fertilizers
4. Detergents
5. Plaster
6. Petroleum products including:

    6.1. Fuel
    6.2. Oil
    6.3. Grease

7. Asphalt components and concrete components
8. Pesticides and herbicides

Employees trained in emergency spill cleanup procedures must be present during unloading of hazardous materials or chemicals.

If practical, use less hazardous products.

Material Storage

Use these storage procedures:

1. Store liquids, petroleum products, and substances listed in CFR Title 40, Parts 110, 117, and 302 in containers or drums approved by the United States Environmental Protection Agency, and place them in secondary containment facilities.
2. Secondary containment facilities must be impervious to the materials stored there for a minimum contact time of 72 hours.
3. Throughout the rainy season, cover secondary containment facilities during non-working days and when precipitation is predicted. Secondary containment facilities must be adequately ventilated.
4. Keep secondary containment facility free of accumulated rainwater or spills. After precipitation, or in the event of spills or leaks, collect accumulated liquid and place into drums within 24 hours. Handle these liquids as hazardous waste under "Hazardous Waste" unless testing determines them to be nonhazardous.
5. Do not store incompatible materials, such as chlorine and ammonia, in the same secondary containment facility.
6. Store materials in the original containers with the original product labels maintained in legible condition. Replace damaged or illegible labels immediately.
7. Secondary containment facility must have the capacity to contain precipitation from a 24-hour-long, 25-year storm; and 10 percent of the aggregate volume of all containers, or entire volume of the largest container within the facility, whichever is greater.
8. Store bagged or boxed material on pallets. Throughout the rainy season, protect bagged or boxed material from wind and rain during non-working days and while precipitation is predicted.
9. Provide sufficient separation between stored containers to allow for spill cleanup or emergency response access. Storage areas must be kept clean, well organized, and equipped with cleanup supplies appropriate for the materials being stored.
10. Repair or replace perimeter controls, containment structures, covers, and liners as necessary. Inspect storage areas before and after precipitation, and at least weekly during other times.

Stockpile Management

Implement practices described in this section for managing stockpiles:

1. During the rainy season
2. During the non-rainy season when the National Weather Service predicts precipitation with a probability of at least 30 percent

1. Reduce or eliminate potential air and water pollution from stockpiled material including soil, paving material, or pressure treated wood.
2. Locate stockpiles:

    2.1. If within the floodplain, at least 100 feet from concentrated flows of storm water, drainage courses, or inlets unless approved
    2.2. If outside the floodplain, at least 50 feet from concentrated flows of storm water, drainage courses, or inlets unless approved

Active and inactive soil stockpiles must be:

1. Covered with soil stabilization measures, plastic sheeting, or geosynthetic fabric
2. Surrounded with a linear sediment barrier

Portland cement concrete rubble, AC, HMA, AC and HMA rubble, aggregate base or aggregate sub-base stockpiles must be:

1. Covered with plastic sheeting, or geosynthetic fabric
2. Surrounded with a linear sediment barrier

Pressure treated wood stockpiles must be:

1. Placed on pallets
2. Covered with impermeable material

Cold mix asphalt concrete stockpiles must be:

1. Placed on impervious surface
2. Covered with impermeable material
3. Protected from run-on and runoff

If you discontinue adding or removing material for up to 21 days the stockpile is considered still active during that period.

Control wind erosion during the non-rainy season and dry weather under Section 10, "Dust Control".

Repair or replace linear sediment barriers and covers as needed to keep them functioning properly. If sediment accumulates to 1/3 of the linear sediment barrier height, remove sediment.

Waste Management

Solid Waste

Do not allow litter or debris to accumulate anywhere on the job site, including storm drain grates, trash racks, and ditch lines. Pick up and remove trash and debris from the job site at least once a week. WPC manager must monitor solid waste storage and disposal procedures on the job site.

If practicable, recycle nonhazardous job site waste and excess material. If recycling is not practicable, disposal must comply with Section 7-1.13, "Disposal of Material Outside the Highway Right of Way."

Furnish enough closed-lid dumpsters of sufficient size to contain the solid waste generated by work activities. When refuse reaches the fill line, empty dumpsters. Dumpsters must be watertight. Do not wash out dumpsters at the job site. Furnish additional containers and more frequent pickup during the demolition phase of construction.

Solid waste includes:

1. Brick
2. Mortar
3. Timber
4. Metal scraps
5. Sawdust
6. Pipe
7. Electrical cuttings
8. Non-hazardous equipment parts
9. Styrofoam and other packaging materials
10. Vegetative material and plant containers from highway planting
11. Litter and smoking material, including litter generated randomly by the public
12. Other trash and debris

Furnish and use trash receptacles in the job site yard, field trailers, and locations where workers gather for lunch and breaks.

Hazardous Waste

Use hazardous waste management practices if waste is generated on the job site from these substances:

1. Petroleum products
2. Asphalt products
3. Concrete curing compound
4. Pesticides
5. Acids
6. Paints
7. Stains
8. Solvents
9. Wood preservatives
10. Roofing tar
11. Road flares
12. Lime
13. Glues and adhesives
14. Materials classified as hazardous by California Code of Regulations, Title 22, Division 4.5; or listed in CFR Title 40, Parts 110, 117, 261, or 302

WPC manager must oversee and enforce hazardous waste management practices. Minimize the production of hazardous materials and hazardous waste at the job site. If damaged, repair or replace perimeter controls, containment structures, and covers.

If hazardous material levels are unknown, use a laboratory certified by the Environmental Laboratory Accreditation Program (ELAP) under the California Department of Public Health (CDPH) to sample and test waste to determine safe methods for storage and disposal.

Separate potentially hazardous waste from nonhazardous waste at the job site. Hazardous waste must be handled, stored, and disposed of under California Code of Regulations, Title 22, Division 4.5, Section 66262.34; and in CFR Title 49, Parts 261, 262, and 263.

Store hazardous waste in sealed containers constructed and labeled with the contents and date accumulated under California Code of Regulations, Title 22, Division 4.5; and in CFR Title 49, Parts 172, 173, 178, and 179. Keep hazardous waste containers in temporary containment facilities under "Material Storage" of these special provisions.

Furnish containers with adequate storage volume at convenient locations for hazardous waste collection. Do not overfill hazardous waste containers. Do not mix hazardous wastes. Do not allow potentially hazardous waste to accumulate on the ground. Store containers of dry waste that are not watertight on pallets. Store hazardous waste away from storm drains, watercourses, moving vehicles, and equipment.

Clean water based or oil based paint from brushes or equipment within a contained area and in a way that does not contaminate soil, watercourses, or storm drain systems. Handle and dispose of these as hazardous waste: paints, thinners, solvents, residues, and sludges that cannot be recycled or reused. When thoroughly dry, dispose of these as solid waste: dry, latex paint and paint cans, used brushes, rags, absorbent materials, and drop cloths.

Dispose of hazardous waste within 90 days of being generated. Use a licensed hazardous waste transporter to take hazardous waste to a Class I Disposal Site. Submit a copy of uniform hazardous waste manifest forms within 24 hours of transporting hazardous waste.

WPC manager must inspect these daily:

1. Storage areas for hazardous materials and wastes
2. Hazardous waste disposal and transporting activities
3. Hazardous material delivery and storage activities

Contaminated Soil

Identify contaminated soil from spills or leaks by noticing discoloration, odors, or differences in soil properties. Soil with evidence of contamination must be sampled and tested by a laboratory certified by ELAP.

If levels of contamination are found to be hazardous, handle and dispose of the soil as hazardous waste.

Prevent the flow of water, including ground water, from mixing with contaminated soil by using one or a combination of these measures:

1. Berms
2. Cofferdams
3. Grout curtains
4. Freeze walls
5. Concrete seal course

If water mixes with contaminated soil and becomes contaminated, sample and test the water using a laboratory certified by ELAP. If levels of contamination are found to be hazardous, handle and dispose of the water as hazardous waste.

Concrete Waste

Use practices to prevent the discharge of portland cement concrete, AC, or HMA waste into storm drain systems or watercourses.

Collect and dispose of portland cement concrete, AC, or HMA waste at locations where:

1. Concrete material, including grout, is used
2. Concrete dust and debris result from demolition
3. Sawcutting, coring, grinding, grooving, or hydro-concrete demolition of portland cement concrete, AC, or HMA creates a residue or slurry
4. Concrete truck or other concrete-coated equipment is cleaned at the job site

Sanitary and Septic Waste

Do not bury or discharge wastewater from sanitary or septic systems within Department right of way. WPC manager must inspect sanitary or septic waste storage and monitor disposal procedures at least weekly. Sanitary facilities that discharge to the sanitary sewer system must be properly connected and free from leaks. Place sanitary facilities at least 50 feet away from storm drains, watercourse, and flow lines.

Obtain written approval from local health agency, city, county, and sewer district before discharging from a sanitary or septic system directly into a sanitary sewer system, and submit a copy to the Engineer. Comply with local health agency provisions while using an on-site disposal system.

Liquid Waste

Use practices to prevent job site liquid waste from entering storm drain systems or watercourses. Liquid wastes include the following:

1. Drilling slurries or fluids
2. Grease-free or oil-free wastewater or rinse water
3. Dredgings, including liquid waste from drainage system cleaning
4. Liquid waste running off a surface including wash or rinse water
5. Other non-storm water liquids not covered by separate permits

Hold liquid waste in structurally sound, leak proof containers such as:

1. Roll-off bins
2. Portable tanks

Liquid waste containers must be of sufficient quantity and volume to prevent overflow, spills and leaks.

Store containers:

1. At least 50 feet from moving vehicles and equipment
2. If within the floodplain, at least 100 feet from concentrated flows of storm water, drainage courses, watercourses, or storm drain inlets unless approved
3. If outside the floodplain, at least 50 feet from concentrated flows of storm water, drainage courses, watercourses, or storm drain inlets unless approved

Remove and dispose of deposited solids from sediment traps under "Solid Waste" unless the Engineer authorizes another method.

Liquid waste may require testing to determine hazardous material content before disposal.

Drilling fluids and residue must be disposed of outside the highway right of way.

If an approved location is available within the job site, fluids and residue exempt under California Code of Regulations, Title 23, Section 2511(g) may be dried by evaporation in a leak proof container. Dispose of remaining solid waste under "Solid Waste" of these special provisions.

Non-Storm Water Management

Water Control and Conservation

Manage water used for work activities to prevent erosion or discharge of pollutants into storm drain systems or watercourses. Obtain approval before washing anything on the job site with water that could discharge into a storm drain system or watercourse. Report discharges immediately.

If water is used at the job site, implement water conservation practices . Inspect irrigation areas. Adjust watering schedules to prevent erosion, excess watering, or runoff. Shut off water source to broken lines, sprinklers, or valves, and repair breaks within 24 hours. If possible, reuse water from waterline flushing for landscape irrigation. Sweep and vacuum paved areas: do not wash with water.

Direct job site water runoff, including water from water line repair, to areas where it can infiltrate into the ground and not enter storm drain systems or watercourses. Do not allow spilled water to escape water truck filling areas. If possible, direct water from off-site sources around the job site. Minimize the contact of off-site water with job site water.

Illegal Connection and Discharge Detection and Reporting

Inspect the job site and the site perimeter before starting work for evidence of illegal connections, discharges, or dumping. After starting work, inspect the job site and perimeter on a daily schedule.

When illegal connections, discharges, or dumping are discovered, notify the Engineer immediately. Take no further action unless ordered by the Engineer. Assume unlabeled or unidentifiable material is hazardous.

Look for the following evidence of illegal connections, discharges, or dumping:

1. Debris or trash piles
2. Staining or discoloration on pavement or soils
3. Pungent odors coming from drainage systems
4. Discoloration or oily sheen on water
5. Stains or residue in ditches, channels or drain boxes
6. Abnormal water flow during dry weather
7. Excessive sediment deposits
8. Nonstandard drainage junction structures
9. Broken concrete or other disturbances near junction structures

Vehicle and Equipment Cleaning

cleaning or washing at the job site except what is necessary to control vehicle tracking or hazardous waste. Notify the Engineer before cleaning vehicles and equipment at the job site with soap, solvents, or steam. Contain and recycle or dispose of resulting waste under "Liquid Waste" or "Hazardous Waste" of these special provisions, whichever is applicable. Do not use diesel to clean vehicles or equipment, and minimize the use of solvents.

Clean or wash vehicles and equipment in a structure equipped with disposal facilities. If using a structure is not possible, vehicles and equipment must be cleaned or washed in an outside area:

1. Paved with AC, HMA, or portland cement concrete
2. Surrounded by a containment berm
3. Equipped with a sump to collect and dispose of wash water
4. If within the floodplain, located at least 100 feet from concentrated flows of storm water, drainage courses, watercourses, or storm drain inlets unless approved
5. If outside the floodplain, located at least 50 feet from concentrated flows of storm water, drainage courses, watercourses, or storm drain inlets unless approved

When washing vehicles or equipment with water, use as little water as possible. Hoses must be equipped with a positive shutoff valve.

Discharge liquid from wash racks to a recycle system or to another approved system. Remove liquids and sediment as necessary.

WPC manger must inspect vehicle and equipment cleaning facilities:

1. Daily when vehicle and equipment cleaning occurs daily
2. Weekly when vehicle and equipment cleaning does not occur daily

Vehicle and Equipment Fueling and Maintenance

If practicable, perform maintenance on vehicles and equipment off the job site.

If fueling or maintenance must be done at the job site, designate a site, or sites, and obtain approval before using. Minimize mobile fueling or maintenance.

If vehicle and equipment fueling and maintenance must be done on the job site, areas for these activities must be:

1. On level ground
2. Protected from stormwater run-on
3. If within the floodplain, located at least 100 feet from concentrated flows of storm water, drainage courses, watercourses, or storm drain inlets unless approved
4. If outside the floodplain, located at least 50 feet from concentrated flows of storm water, drainage courses, watercourses, or storm drain inlets unless approved

Use containment berms or dikes around the fueling and maintenance area. Keep adequate quantities of absorbent spill cleanup material and spill kits in the fueling and maintenance area and on fueling trucks. Dispose of spill cleanup material and kits immediately after use. Use drip pans or absorbent pads during fueling or maintenance.

Fueling or maintenance activities must not be left unattended. Fueling nozzles must be equipped with an automatic shutoff control. Vapor recovery fueling nozzles must be used where required by the Air Quality Management District. When not in use, nozzles must be secured upright. Do not top-off fuel tanks.

Recycle or properly dispose of used batteries and tires.

WPC manager must inspect vehicle and equipment maintenance and fueling areas:

1. Daily when vehicle and equipment maintenance and fueling occurs daily
2. Weekly when vehicle and equipment maintenance and fueling does not occur daily

WPC manager must inspect vehicles and equipment at the job site for leaks and spills on a daily schedule. Operators must inspect vehicles and equipment each day of use.

If leaks cannot be repaired immediately, remove the vehicle or equipment from the job site.

Material and Equipment Used Over Water

Place drip pans and absorbent pads under vehicles or equipment used over water. Keep an adequate supply of spill cleanup material with the vehicle or equipment. If the vehicle or equipment will be idle for more than one hour, place drip pans or plastic sheeting under vehicles or equipment on docks, barges, or other surfaces over water.

Furnish watertight curbs or toe boards on barges, platforms, docks, or other surfaces over water to contain material, debris, and tools. Secure material to prevent spills or discharge into water due to wind.

Structure Removal Over or Adjacent to Water

Do not allow demolished material to enter storm water systems or watercourses. Use approved covers and platforms to collect debris. Use attachments on equipment to catch debris on small demolition activities. Empty debris catching devices daily and handle debris under "Waste Management" of these special provisions.

WPC manager must inspect demolition sites within 50 feet of storm water systems or watercourses daily.

Paving, Sealing, Sawcutting, and Grinding Activities

Prevent these materials from entering storm drain systems or water courses:

1. Cementitious material
2. Asphaltic material
3. Aggregate or screenings
4. Grinding or sawcutting residue
5. Pavement chunks
6. Shoulder backing
7. Methacrylate

Cover drainage inlets and use linear sediment barriers to protect downhill watercourses until paving, sealing, sawcutting, or grinding activities are completed and excess material has been removed. Cover drainage inlets and manholes during the application of seal coat, tack coat, slurry seal, or fog seal.

During the rainy season or when precipitation is predicted, limit paving, sawcutting, and grinding to places where runoff can be captured.

Do not start seal coat, tack coat, slurry seal, or fog seal activities when precipitation is predicted during application or curing period. Do not excavate material from existing roadways during precipitation.

Use a vacuum to remove slurry from sawcutting activities immediately after slurry is produced. Do not allow slurry to run onto lanes open to public traffic or off the pavement.

Collect residue from portland cement concrete grinding activities with a vacuum attachment on the grinding machine. Do not leave residue on pavement or allow residue to flow across pavement.

If approved, material excavated from existing roadways may be stockpiled under "Stockpile Management" of these special provisions.

Do not coat asphalt trucks and equipment with substances that contain soap, foaming agents, or toxic chemicals.

When paving equipment is not in use, park over drip pans or plastic sheeting with absorbent material to catch drips.

Thermoplastic Striping and Pavement Markers

Thermoplastic striping and preheating equipment shutoff valves must work properly at all times. Do not preheat, transfer, or load thermoplastic within 50 feet of drainage inlets or watercourses. Do not fill preheating container above a level that is 6 inches below the top. Truck beds must be cleaned daily of scraps or melted thermoplastic.

Do not unload, transfer, or load bituminous material for pavement markers within 50 feet of drainage inlets or watercourses. Release all pressure from melting tanks before removing the lid to fill or service. Do not fill melting tanks above a level that is 6 inches below the top.

Collect bituminous material from the roadway after marker removal.

Pile Driving

Keep spill kits and cleanup material at pile driving locations. Pile driving equipment must be parked over drip pans, absorbent pads, or plastic sheeting with absorbent material. When precipitation is predicted, protect pile driving equipment by parking on plywood and covering with plastic.

When not in use, store pile driving equipment:

1. On level ground
2. Protected from stormwater run-on
3. If within the floodplain, at least 100 feet from concentrated flows of storm water, drainage courses, watercourses, or storm drain inlets unless approved
4. If outside the floodplain, at least 50 feet from concentrated flows of storm water, drainage courses, watercourses, or storm drain inlets unless approved

If practicable, use vegetable oil instead of hydraulic fluid.

WPC manager must inspect pile driving area for leaks and spills:

1. Daily when pile driving occurs daily
2. Weekly when pile driving does not occur daily

Concrete Curing

Do not overspray chemical curing compound. Minimize drift by spraying as close to the concrete as possible. Cover drainage inlets before applying curing compound.

Minimize the use and discharge of water by using wet blankets or similar methods to maintain moisture while curing concrete.

Concrete Finishing

Collect and dispose of water and solid waste from high-pressure water blasting. Cover drainage inlets within 50 feet before sandblasting. Minimize drift of dust and blast material by keeping the nozzle close to the surface of the concrete. Blast residue may contain hazardous material.

Inspect containment structures for concrete finishing activities for damage before each day of use and before predicted precipitation. Remove liquid and solid waste from the containment structure after each work shift.

Sweeping

Sweeping must be done using hand or mechanical methods such as vacuuming.

Sweeping must be done:

1. At the end of each work shift
2. When the National Weather Service predicts precipitation with a probability of at least 30 percent
3. On paved roads at job site entrance and exit locations
4. On paved areas within the job site that flow to storm drains or water bodies

You may stockpile collected material at the job site. Dispose of collected material at least once per week. Remove collected material including sediment from paved shoulders, drain inlets, curbs and dikes, and other drainage areas.

Sediment collected from the roadway during sweeping may be disposed of within the job site. Protect disposal areas against erosion.

Remove and dispose of trash collected during sweeping under Section 7-1.13, "Disposal of Material Outside the Highway Right of Way".

Dewatering

Dewatering consists of discharging accumulated storm water, ground water, or surface water from excavations or temporary containment facilities.

If dewatering and discharging activities are specified under another work item such as "Temporary Active Treatment System" or "Dewatering and Discharge", then perform dewatering work as specified in those sections.

If dewatering and discharging activities are not specified under another work item, then:

1. At least 10 days before starting dewatering, submit a Dewatering and Discharge Plan under Section 5-1.02, "Plans and Working Drawings," and "Water Pollution Control" of the Standard Specifications. Dewatering and Discharge Plan must include:
   1.1. Title sheet and table of contents
   1.2. Description of dewatering and discharge activities detailing locations, quantity of water, equipment, and discharge point
   1.3. Estimated schedule for dewatering and discharge (start and end dates, intermittent or continuous)
   1.4. Discharge alternatives such as dust control or percolation
   1.5. Visual monitoring procedures with inspection log
2. Conduct dewatering activities under the Field Guide for Construction Dewatering.
3. Ensure that dewatering discharge does not cause erosion, scour, or sedimentary deposits that impact natural bedding materials.
4. Discharge water within project limits. If water cannot be discharged within project limits due to site constraints, dispose of it in the same way specified for material in Section 7-1.13, "Disposal of Material Outside the Highway Right of Way".
5. Do not discharge storm water or non-storm water that has an odor, discoloration other than sediment, an oily sheen, or foam on the surface. Notify the Engineer immediately upon discovering any of those conditions.
6. WPC manager must inspect dewatering activities:
   6.1. Daily when dewatering work occurs daily
   6.2. Weekly when dewatering work does not occur daily

PAYMENT

Full compensation for construction site management shall be included in the contract lump sum price for Erosion Control and no additional compensation will be allowed therefor.

13-1.04 TEMPORARY CONCRETE WASHOUT FACILITY

GENERAL

Summary

This work includes removal and disposal of concrete waste by furnishing, maintaining, and removing temporary concrete washout facilities.

SWPPP must describe and include the use of temporary concrete washout facilities as a water pollution control practice for waste management and materials pollution control.

Submittals

At least 5 business days before concrete activities start, submit:

1. Location of washout facilities
2. Name and location of off-site concrete waste disposal facility to receive concrete waste
3. Copy of permit issued by RWQCB for off-site commercial disposal facility
4. Copy of license for off-site commercial disposal facility
5. Copy of permit issued by state or local agency having jurisdiction over disposal facility if disposal site is located outside of the State of California
6. Gravel-filled bag fabric
7. Plastic liner
8. Alternate attachment device for staples, if used

Quality Control and Assurance

Retain and submit records of disposed concrete waste.

MATERIALS

Straw Bales

Straw bales must comply with Section 20-2.06, "Straw," of the Standard Specifications and be:

1. At least 14 inches wide, 18 inches high, 36 inches long, and weigh at least 50 pounds.
2. Composed entirely of vegetative matter, except for binding material.
3. Bound by wire, nylon, or polypropylene string. Do not use jute or cotton binding. Baling wire must be minimum 16 gauge. Nylon or polypropylene string must be approximately 0.08-inch in diameter with 80 pounds of breaking strength.

Stakes

Stakes may be either wood or metal and must comply with the following:

1. Wood stakes must be:

    1.1. Untreated fir, redwood, cedar, or pine and cut from sound timber
    1.2. Straight and free of loose or unsound knots and other defects which would render stakes unfit for use
    1.3. Pointed on the end to be driven into the ground
    1.4. At least 2" x 2" x 48" in size

2. Metal stakes must be at least 0.5-inch diameter and 48 inches long. Tops of metal stakes must be bent at a 90-degree angle or capped with an orange or red plastic safety cap that fits snugly to the metal stake.

Concrete Washout Sign

Concrete washout sign must comply with Section 12-3.06B, "Portable Signs" of the Standard Specifications and:

1. Be approved by the Engineer
2. Consist of base, framework, and sign panel
3. Be made of plywood
4. Be minimum 2' x 4' in size
5. Read "Concrete Washout" with 3 inches high black letters on white background

Gravel-filled Bag Fabric

Geosynthetic fabric for temporary gravel bag berm must consist of one of these:

1. Polyester
2. Polypropylene
3. Combined polyester and polypropylene

Sample under ASTM D 4354, Procedure C.

Test under ASTM D 4759. All properties must be based on Minimum Average Roll Value (MARV).

Identify, store, and handle under ASTM D 4873.

Protect geosynthetics from moisture, sunlight, and damage during shipping and storage. Label each unit with manufacturer's name, identifying information, and product identification.

Gravel-filled bag fabric must comply with requirements in this table:

Specification	Requirements
Grab breaking load 1-inch grip, lb, min. in each direction	205
Apparent elongation percent, min., in each direction	50
Water Flow Rate max. average roll value, gallons per minute/square foot	80-150
Permittivity 1/sec., min	1.2
Apparent opening size max. average roll value, U.S. Standard sieve size	40-80
Ultraviolet Degradation percent of original unexposed grab breaking load 500 hour, minimum	70

Gravel

Gravel for gravel-filled bags must be:

1. From 3/8 to 3/4 inch in diameter
2. Clean and free of clay balls, organic matter, and other deleterious materials

Gravel-filled Bag

Gravel-filled bag must:

1. Be made of gravel-filled bag fabric.
2. Have inside dimensions from 24 to 32 inches long, and from 16 to 20 inches wide.
3. Have bound opening to retain gravel. Opening must be sewn with yarn, bound with wire, or secured with a closure device.
4. Weigh from 30 to 50 pounds when filled with gravel.

Plastic Liner

Plastic liner must be:

1. Single ply, new polyethylene sheeting
2. At least 10 mils thick

3. Free of holes, punctures, tears or other defects
4. Without seams or overlapping joints

CONSTRUCTION

Placement

Place concrete washout facilities at job site:

1. Before concrete placement activities start
2. In the immediate area of concrete work as approved by the Engineer
3. No closer than 50 feet from storm drain inlets, open drainage facilities, ESAs, or watercourses
4. Away from construction traffic or public access areas

Install a concrete washout sign adjacent to each temporary concrete washout facility location.
For at grade and below grade concrete washout facilities:

1. Build to contain liquid and concrete waste without seepage, spills, or overflow
2. Build in sufficient quantity and size to contain liquid and concrete waste generated by washout activities for concrete wastes
3. Install with plastic liner

If approved, the length and width of temporary concrete washout facility may be increased from minimum dimensions shown on the plans.

If below grade concrete washout facilities are used, construct berms from compacted native material. Gravel may be used in conjunction with compacted native material.

Operation

Use concrete washout facilities for:

1. Washout from concrete delivery trucks
2. Slurries containing portland cement concrete or hot mix asphalt from sawcutting, coring, grinding, grooving, and hydro-concrete demolition
3. Concrete waste from mortar mixing stations

Relocate concrete washout facilities as needed for concrete construction work.
Do not fill higher than 6 inches below rim.
Your WPC manager must inspect concrete washout facilities:

1. Daily if concrete work occurs daily
2. Weekly if concrete work does not occur daily

Maintenance

Maintain temporary concrete washout facility by:

1. Providing adequate holding capacity with 12-inch minimum freeboard
2. Removing and disposing of hardened concrete under Section 15-3.02, "Removal Methods"
3. Patching holes, rips, and voids in plastic liner with tape
4. If plastic liner leaks after patching, replace plastic liner
5. Repairing or replacing gravel-filled bags when they become split, torn, unraveled, or gravel spills out

Repair temporary concrete washout facility within 24 hours of discovering damage unless the Engineer approves a longer period.

If your vehicles, equipment, or activities disturb or displace temporary concrete washout facility, repair temporary concrete washout facility at your expense.

Removal

Dispose of concrete waste material at a facility specifically licensed to receive solid concrete waste, liquid concrete waste, or both. When concrete washout facility is full, remove and dispose of concrete waste within 2 days.

When the Engineer determines that temporary concrete washout facility is not needed, remove and dispose of it under Section 7-1.13, "Disposal of Material Outside the Highway Right of Way," of the Standard Specifications.

Backfill and repair ground disturbance, including holes and depressions, caused by the installation and removal of temporary concrete washout facility, under Section 15-1.02, "Preservation of Property," of the Standard Specifications.

PAYMENT

Full compensation for temporary concrete washout facility is included in the contract lump sum price for Erosion Control.

This work includes constructing, maintaining, and removing temporary check dams.

The SWPPP must describe and include the use of temporary check dams as a water pollution control practice for soil stabilization in flow conveyances.

Submittals

Submit a Certificate of Compliance as specified in Section 6-1.07, "Certificates of Compliance" of the Standard Specifications for:

1. Fiber rolls
2. Gravel-filled bag fabric

MATERIALS

Fiber Rolls

Fiber rolls must:

1. Last for at least one year after installation
2. Be Type 1 or Type 2

If specified, Type 1 fiber rolls must be:

1. Made from an erosion control blanket:

    1.1. Classified by the Erosion Control Technology Council (ECTC) as ECTC 2D
    1.2. With a Universal Soil Loss Equation (USLE) C-Factor of not more than 0.20 at a 2:1 (horizontal: vertical) slope
    1.3. Capable to withstand a maximum shear stress of 1.75 pounds per square foot under ASTM D 6460
    1.4. With a minimum tensile strength of 75 pounds per foot under ASTM D 5035
    1.5. With top and bottom surfaces covered with lightweight non-synthetic netting

1.6. Either of the following:
    1.6.1. Double net straw and coconut blanket with 70 percent straw and 30 percent coconut fiber
    1.6.2. Double net excelsior blanket with 80 percent of the wood excelsior fibers being 6 inches or longer

2. Rolled along the width
3. Secured with natural fiber twine every 6 feet and 6 inches from each end
4. Finished to be either:

    4.1. From 8 to 10 inches in diameter, from 10 to 20 feet long, and at least 0.5 pounds per linear foot
    4.2. From 10 to 12 inches in diameter, at least 10 feet long, and at least 2 pounds per linear foot

If specified, Type 2 fiber rolls must:

1. Be filled with rice or wheat straw, wood excelsior, or coconut fiber
2. Be covered with a biodegradable jute, sisal, or coir fiber netting
3. Have the netting secured tightly at each end
4. Be finished to be either:

    4.1. From 8 to 10 inches in diameter, from 10 to 20 feet long, and at least 1.1 pounds per linear foot
    4.2. From 10 to 12 inches in diameter, at least 10 feet long, and at least 3 pounds per linear foot

Wood Stakes

Wood stakes must be:

1. Untreated fir, redwood, cedar, or pine and cut from sound timber
2. Straight and free of loose or unsound knots and other defects which would render the stakes unfit for use
3. Pointed on the end to be driven into the ground

For fiber rolls, wood stakes must be at least:

1. 1" x 1" x 24" in size for Type 1 installation
2. 1" x 2" x 24" in size for Type 2 installation

Rope

For Type 2 installation, rope must:

1. Be biodegradable, such as sisal or manila
2. Have a minimum diameter of 1/4 inch

Gravel-filled Bag Fabric

Geosynthetic fabric for temporary gravel bag berm must consist of one of the following:

1. Polyester
2. Polypropylene

3. Combined polyester and polypropylene

Sample under ASTM D 4354, Procedure C.

Test under ASTM D 4759. All properties are based on Minimum Average Roll Value (MARV).

Identify, store, and handle under ASTM D 4873.

Protect geosynthetics from moisture, sunlight and damage during shipping and storage. Label each unit with the manufacturer's name, identifying information and product identification.

Gravel-filled bag fabric must comply with:

Specification	Requirements
Grab breaking load 1-inch grip, lb, min. in each direction	205
Apparent elongation percent, min., in each direction	50
Water Flow Rate max. average roll value, gallons per minute/square foot	80-150
Permittivity 1/sec., min	1.2
Apparent opening size max. average roll value, U.S. Standard sieve size	40-80
Ultraviolet Degradation percent of original unexposed grab breaking load 500 hr, minimum	70

Gravel

Gravel for gravel-filled bags must be:

1. From 3/8 to 3/4 inch in diameter
2. Clean and free from clay balls, organic matter, and other deleterious materials

Gravel-filled Bags

Gravel-filled bags must:

1. Be made from gravel-filled bag fabric.
2. Have inside dimensions from 24 to 32 inches in length, and from 16 to 20 inches in width.
3. Have the opening bound to retain the gravel. The opening must be sewn with yarn, bound with wire, or secured with a closure device.
4. Weigh from 30 to 50 pounds when filled with gravel.

CONSTRUCTION

Before placing temporary check dam, remove obstructions including rocks, clods, and debris greater than one inch in diameter from the ground.

If check dams are to be placed in the same areas as erosion control blankets, then install the blankets before placing the check dams.

Temporary check dams must be:

1. Placed approximately perpendicular to the centerline of the ditch or drainage line
2. Installed with sufficient spillway depth to prevent flanking of concentrated flow around the ends of the check dam
3. Type 1 for lashed fiber rolls, Type 2 for gravel-filled bags, or a combination:

    3.1. If the ditch is lined with concrete or hot mix asphalt, use temporary check dam (Type 2)
    3.2. If the ditch is unlined, you may use temporary check dam (Type 1) or (Type 2)

Temporary check dam (Type 1) must be:

1. Secured with rope and notched wood stakes.
2. Installed by driving stakes into the soil until the notch is even with the top of the fiber roll.
3. Installed by lacing the rope between stakes and over the fiber roll. Knot the rope at each stake.
4. Tightened by driving the stakes further into the soil forcing the fiber roll against the surface of the ditch or drainage line.

Temporary check dam (Type 2) must be:

1. Placed as a single layer of gravel bags
2. End-to-end to eliminate gaps

If you need to increase the height of the temporary check dam (Type 2):

1. Increase height by adding rows of gravel-filled bags
2. Stack bags in a way that the bags in the top row overlap the joints in the lower row
3. Stabilize dam by adding rows of bags at the bottom

MAINTENANCE

Maintain temporary check dams to provide sediment holding capacity and to reduce concentrated flow velocities.

Remove sediment deposits, trash, and debris from temporary check dams as needed or when directed by the Engineer. If removed sediment is deposited within project limits, it must be stabilized and not subject to erosion by wind or water. Trash and debris must be removed and disposed of as specified in Section 7-1.13, "Disposal of Material Outside the Highway Right of Way," of the Standard Specifications.

Maintain temporary check dams by:

1. Removing sediment from behind the check dam when sediment is 1/3 the height of the check dam above ground
2. Repairing or adjusting the check dams when scour and other evidence of concentrated flow occur beneath the fiber roll
3. Repairing or replacing the fiber rolls or gravel-filled bags when they become split, torn, or unraveled
4. Adding stakes when the fiber rolls slump or sag
5. Replacing broken or split wood stakes

Repair temporary check dams within 24 hours of discovering damage unless the Engineer approves a longer period, or activities disturb or displace temporary check dams, repair temporary check dams at your expense.

The Department does not pay maintenance costs for cleanup, repair, removal, disposal, or replacement due to improper installation or your negligence.

REMOVAL

When the Engineer determines that temporary check dams are not required, they must be removed and disposed of under Section 7-1.13, "Disposal of Material Outside the Highway Right of Way," of the Standard Specifications.

Ground disturbance, including holes and depressions, caused by the installation and removal of the temporary check dams must be backfilled and repaired under Section 15-1.02, "Preservation of Property," of the Standard Specifications.

MEASUREMENT AND PAYMENT

Full compensation for temporary check dams is included in the contract lump sum price paid for Erosion Control, and no additional compensation will be allowed therefor.

The State and you share the cost of maintaining the temporary check dams. The State determines the maintenance cost under Section 9-1.03, "Force Account Payment," of the Standard Specifications and pays you one-half of that cost.

This work includes constructing, maintaining, and removing temporary fiber roll.

The SWPPP must describe and include the use of temporary fiber roll as a water pollution control practice for sediment control.

Submittals

Submit a Certificate of Compliance as specified in Section 6-1.07, "Certificates of Compliance" of the Standard Specifications for fiber roll.

MATERIALS

Fiber Roll

Fiber roll must:

1. Last for at least one year after installation
2. Be Type 1 or Type 2

If specified, Type 1 fiber roll must be:

1. Made from an erosion control blanket:

    1.1. Classified by the Erosion Control Technology Council (ECTC) as ECTC 2D
    1.2. With a Universal Soil Loss Equation (USLE) C-Factor of not more than 0.20 at a 2:1 (horizontal:vertical) slope
    1.3. Capable to withstand a maximum shear stress of 1.75 pounds per square foot under ASTM D 6460
    1.4. With a minimum tensile strength of 75 pounds per foot under ASTM D 5035
    1.5. With top and bottom surfaces covered with extruded photodegradable plastic netting or lightweight non-synthetic netting

1.6. That complies with one of the following:

1.6.1. Double net straw and coconut blanket with 70 percent straw and 30 percent coconut fiber
1.6.2. Double net excelsior blanket with 80 percent of the wood excelsior fibers being 6 inches or longer

2. Rolled along the width
3. Secured with natural fiber twine every 6 feet and 6 inches from each end
4. Finished to be either:

4.1. From 8 to 10 inches in diameter, from 10 to 20 feet long, and at least 0.5 pounds per linear foot
4.2. From 10 to 12 inches in diameter, at least 10 feet long, and at least 2 pounds per linear foot

If specified, Type 2 fiber roll must:

1. Be filled with rice or wheat straw, wood excelsior, or coconut fiber
2. Be covered with a biodegradable jute, sisal, or coir fiber netting
3. Have the netting secured tightly at each end
4. Be finished to be either:

4.1. From 8 to 10 inches in diameter, from 10 to 20 feet long, and at least 1.1 pounds per linear foot
4.2. From 10 to 12 inches in diameter, at least 10 feet long, and at least 3 pounds per linear foot

Wood Stakes

Wood stakes must be:

1. Untreated fir, redwood, cedar, or pine and cut from sound timber
2. Straight and free of loose or unsound knots and other defects which would render the stakes unfit for use
3. Pointed on the end to be driven into the ground

For fiber roll, wood stakes must be at least:

1. 1" x 1" x 24" in size for Type 1 installation
2. 1" x 2" x 24" in size for Type 2 installation

Rope

For Type 2 installation, rope must:

1. Be biodegradable, such as sisal or manila
2. Have a minimum diameter of 1/4 inch

CONSTRUCTION

Before placing fiber roll, remove obstructions including rocks, clods, and debris greater than one inch in diameter from the ground.

If fiber roll is to be placed in the same area as erosion control blanket, install the blanket before placing the fiber roll. For other soil stabilization practices such as hydraulic mulch or compost, place the fiber roll and then apply the soil stabilization practice.

Place fiber roll on slopes at the following spacing unless the plans show a different spacing:

1. 10 feet apart for slopes steeper than 2:1 (horizontal:vertical)
2. 15 feet apart for slopes from 2:1 to 4:1 (horizontal:vertical)
3. 20 feet apart for slopes from 4:1 to 10:1 (horizontal:vertical)
4. 50 feet apart for slopes flatter than 10:1 (horizontal:vertical)

Place fiber roll approximately parallel to the slope contour. For any 20 foot section of fiber roll, do not allow the fiber roll to vary more than 5 percent from level.

Type 1 and Type 2 fiber roll may be installed using installation method Type 1, Type 2, or a combination:

For installation method Type 1, install fiber roll by:

1. Placing in a furrow that is from 2 to 4 inches deep
2. Securing with wood stakes every 4 feet along the length of the fiber roll
3. Securing the ends of the fiber roll by placing a stake 6 inches from the end of the roll
4. Driving the stakes into the soil so that the top of the stake is less then 2 inches above the top of the fiber roll

For installation method Type 2, install fiber roll by:

1. Securing with rope and notched wood stakes.
2. Driving stakes into the soil until the notch is even with the top of the fiber roll.
3. Lacing the rope between stakes and over the fiber roll. Knot the rope at each stake.
4. Tightening the fiber roll to the surface of the slope by driving the stakes further into the soil.

MAINTENANCE

Maintain temporary fiber roll to provide sediment holding capacity and to reduce runoff velocities.

Remove sediment deposits, trash, and debris from temporary fiber roll as needed or when directed by the Engineer. If removed sediment is deposited within project limits, it must be stabilized and not subject to erosion by wind or water. Trash and debris must be removed and disposed of as specified in Section 7-1.13, "Disposal of Material Outside the Highway Right of Way," of the Standard Specifications.

Maintain temporary fiber roll by:

1. Removing sediment from behind the fiber roll when sediment is 1/3 the height of the fiber roll above ground
2. Repairing or adjusting the fiber roll when rills and other evidence of concentrated runoff occur beneath the fiber roll.
3. Repairing or replacing the fiber roll when they become split, torn, or unraveled
4. Adding stakes when the fiber roll slump or sag
5. Replacing broken or split wood stakes

Repair temporary fiber roll within 24 hours of discovering damage unless the Engineer approves a longer period.

If your vehicles, equipment, or activities disturb or displace temporary fiber roll, repair temporary fiber roll at your expense.

The Department does not pay maintenance costs for cleanup, repair, removal, disposal, or replacement due to improper installation or your negligence.

REMOVAL

When the Engineer determines that temporary fiber roll is not required, they must be removed and disposed of under Section 7-1.13, "Disposal of Material Outside the Highway Right of Way," of the Standard Specifications.

Ground disturbance, including holes and depressions, caused by the installation and removal of the temporary fiber roll must be backfilled and repaired under Section 15-1.02, "Preservation of Property," of the Standard Specifications.

MEASUREMENT AND PAYMENT

Temporary fiber roll is measured by the linear foot along the centerline of the installed roll. Where temporary fiber roll is joined and overlapped, the overlap is measured as a single installed roll.

Full compensation for temporary fiber roll is included in the contract lump sum price paid for Erosion Control, and no additional compensation will be allowed therefor.

The State and you share the cost of maintaining the temporary fiber roll. The State determines the maintenance cost under Section 9-1.03, "Force Account Payment," of the Standard Specifications and pays you one-half of that cost.

13-1.07 TEMPORARY FENCE

Temporary fence shall be furnished, constructed, maintained, and later removed as shown on the plans, as specified in these special provisions and as directed by the Engineer.

Except as otherwise specified in this section, temporary fence shall conform to the plan details and the specifications for permanent fence of similar character as provided in Section 80, "Fences," of the Standard Specifications. Temporary fencing shall be at least 8 feet tall and shall include windscreen (privacy screen) for the entire length and height of the fencing limits.

Used materials may be installed provided the used materials are good, sound and are suitable for the purpose intended, as determined by the Engineer.

Materials may be commercial quality provided the dimensions and sizes of the materials are equal to, or greater than, the dimensions and sizes shown on the plans or specified herein.

Posts shall be either metal or wood at the Contractor's option.

Galvanizing and painting of steel items will not be required.

Treating wood with a wood preservative will not be required.

Concrete footings for metal posts will not be required.

Temporary fence that is damaged during the progress of the work shall be repaired or replaced by the Contractor at the Contractor's expense.

When no longer required for the work, as determined by the Engineer, temporary fence shall be removed. Removed facilities shall become the property of the Contractor and shall be removed from the site of the work, except as otherwise provided in this section.

Removed temporary fence materials that are not damaged may be constructed in the permanent work provided the materials conform to the requirements specified for the permanent work and such materials are new when used for the temporary fence.

Holes caused by the removal of temporary fence shall be backfilled in conformance with the provisions in the second paragraph of Section 15-1.02, "Preservation of Property," of the Standard Specifications.

Full compensation for providing, maintaining, removing, and disposing of temporary fence shall be considered as included in the contract lump sum price paid for Erosion Control, and no additional compensation will be allowed therefor.

13-1.08 TEMPORARY CONSTRUCTION ENTRANCE

GENERAL

Summary

This work includes constructing, maintaining, and removing temporary construction entrance to provide temporary access.

The SWPPP must describe and include the use of temporary construction entrance as a water pollution control practice for tracking control.

Temporary construction entrance must be Type 1, Type 2, or a combination.

Submittals

of Compliance under Section 6-1.07, "Certificates of Compliance," of the Standard Specifications for:

1. Temporary entrance fabric
2. Rock

Submit details for alternatives at least 5 business days before installation. You may propose alternatives for the following items:

1. Alternative sump
2. Alternative corrugated steel panels

If the Engineer approves, you may eliminate the sump.

MATERIALS

Temporary Entrance Fabric

Temporary entrance fabric must comply with Section 88-1.04, "Rock Slope Protection Fabric," of the Standard Specifications and be woven Type B or non-woven Type B.

Rock

Rock must be Type A or Type B.

Rock (Type A) must comply with:

1. Requirements under Section 72-2.02, "Materials," of the Standard Specifications

2. Following sizes:

Square Screen Size (inch)	Percentage Passing	Percentage Retained
6	100	0
3	0	100

Rock (Type B) must be Railway Ballast Number 25. Do not use blast furnace slag. Railway Ballast Number 25 must comply with:

1. Description in AREMA Manual for Railway Engineering.
2. Following sizes:

Nominal Size Square Opening	Percentage Passing								
	3"	2-1/2"	2"	1-1/2"	1"	3/4"	1/2"	3/8"	No. 4
2-1/2"-3/8"	100	80-100	60-85	50-70	25-50	-	5-20	0-10	0-3

3. Following properties:

Specification	Requirements
Percent material passing No. 200 sieve, max. ASTM: C 117	1.0
Bulk specific gravity, min. ASTM: C 127	2.60
Absorption, percent min. ASTM: C 127	1.0
Clay lumps and friable particles, percent max. ASTM: C 142	0.5
Degradation, percent max. ASTM: C 535	30
Soundness (Sodium Sulfate), percent max. ASTM: C 88	5.0
Flat, elongated particles, or both, percent max. ASTM: D 4791	5.0

Corrugated Steel Panels

Corrugated steel panels must:

1. Be made of steel.
2. Be pressed or shop welded
3. Have a slot or hook for connecting panels together

CONSTRUCTION

Construction entrance by:

1. Removing vegetation to ground level and clear away debris
2. Grading ground to uniform plane
3. Grading ground surface to drain
4. Removing sharp objects that may damage fabric
5. Compacting the top 1.5 feet of soil to at least 90 percent relative compaction

If temporary entrance (Type 1) is specified, use rock (Type A).

If temporary construction entrance (Type 2) is specified, use Rock (Type B) under corrugated steel panels. Use at least 6 corrugated steel panels for each entrance. Couple panels together.

Install temporary construction entrance by:

1. Positioning fabric along the length of the entrance
2. Overlapping sides and ends of fabric by at least 12 inches
3. Spreading rock over fabric in the direction of traffic
4. Covering fabric with rock within 24 hours
5. Keeping a 6 inch layer of rock over fabric to prevent damage to fabric by spreading equipment

Do not drive on fabric until rock is spread.

Unless the Engineer eliminates the sump, install a sump within 20 feet of each temporary construction entrance.

Repair fabric damaged during rock spreading by placing a new fabric over the damaged area. New fabric must be large enough to cover damaged area and provide at least 18-inch overlap on all edges.

Maintenance

Maintain temporary construction entrance to minimize generation of dust and tracking of soil and sediment onto public roads. If dust or sediment tracking increases, place additional rock unless the Engineer approves another method.

Repair temporary construction entrance if:

1. Fabric is exposed
2. Depressions in the entrance surface develop
3. Rock is displaced

Repair temporary construction entrance within 24 hours of discovering damage unless the Engineer approves a longer period.

During use of temporary construction entrance, do not allow soil, sediment, or other debris tracked onto pavement to enter storm drains, open drainage facilities, or watercourses. When material is tracked onto pavement, remove it within 24 hours unless the Engineer approves a longer period.

If your vehicles, equipment, or activities disturb or displace the temporary construction entrance, repair it at your expense.

The Department does not pay maintenance costs for cleanup, repair, removal, disposal, or replacement due to improper installation or your negligence.

Removal

When the Engineer determines that temporary construction entrance is not required, remove and dispose of it under Section 7-1.13, "Disposal of Material Outside the Highway Right of Way," of the Standard Specifications

Backfill and repair ground disturbance, including holes and depressions, caused by installation and removal of temporary construction entrance under Section 15-1.02, "Preservation of Property," of the Standard Specifications.

MEASUREMENT AND PAYMENT

Full compensation for temporary construction entrance is included in the contract lump sum price paid for Erosion Control, and no additional payment will be made therefor.

No additional compensation will be made if the temporary construction entrance is relocated during the course of construction.

The State and you share the cost of maintaining temporary construction entrance. The State determines the maintenance cost under Section 9-1.03, "Force Account Payment," of the Standard Specifications and pays you one-half of that cost.

13-1.09 TEMPORARY DRAINAGE INLET PROTECTION

GENERAL

Summary

This work includes constructing, maintaining, and removing temporary drainage inlet protection. Drainage inlet protection settles and filters sediment before stormwater runoff discharges into storm drainage systems.

The SWPPP must describe and include the use of temporary drainage inlet protection as a water pollution control practice for sediment control.

Provide temporary drainage inlet protection to meet the changing conditions around the drainage inlet. Temporary drainage inlet protection must be:

1. Appropriate type to meet the conditions around the drainage inlet
2. Type 1, Type 2, Type 3A, Type 3B, Type 4, Type 4B, Type 5, Type 6A, Type 6B, or a combination

Submittals

Submit a Certificate of Compliance as specified in Section 6-1.07, "Certificates of Compliance" of the Standard Specifications for:

1. Erosion control blanket
2. Fiber rolls
3. Safety cap for metal posts
4. Silt fence fabric
5. Sediment filter bag
6. Foam barrier
7. Rigid plastic barrier
8. Gravel-filled bag fabric

If you substitute the steel wire staple with an alternative attachment device, submit a sample of the device for approval at least 5 business days before installation.

MATERIALS

Geosynthetic Fabrics

Geosynthetic fabrics for temporary drainage inlet protection must consist of one of the following:

1. Polyester
2. Polypropylene
3. Combined polyester and polypropylene

Geosynthetic fabrics for temporary drainage inlet must comply with the specifications for water pollution control in Section 88-1.05, "Water Pollution Control," of the Standard Specifications.

Foam barrier must comply with:

Foam Barrier

Property	ASTM Designation	Specification
Grab breaking load 1-inch grip, lb, min. in each direction	D 4632	200
Apparent elongation percent, min., in each direction	D 4632	15
Water Flow Rate max. average roll value, gallons per minute/square foot	D 4491	100-150
Permittivity 1/sec., min.	D 4491	0.05
Apparent opening size max. average roll value, U.S. Standard sieve size	D 4751	40
Ultraviolet Degradation percent of original unexposed grab breaking load 500 hr, minimum	D 4595	70

Sample under ASTM D 4354, Procedure C.

Test under ASTM D 4759. All properties are based on Minimum Average Roll Value (MARV).

Identify, store, and handle under ASTM D 4873.

Erosion Control Blanket

Erosion control blanket must be:

1. Described as a rolled erosion control product (RECP)
2. Classified as temporary and degradable or long-term and non-degradable
3. Machine-made mats
4. Provided in rolled strips
5. Classified by the Erosion Control Technology Council (ECTC)

Erosion control blanket classified as temporary and degradable must be one of the following:

1. Double net excelsior blanket:

    1.1. Classified as ECTC Type 2D
    1.2. Classified as an erosion control blanket
    1.3. Designed to last for at least one year after installation
    1.4. With a Universal Soil Loss Equation (USLE) C-Factor of not more than 0.20 at a 2:1 (horizontal:vertical) slope
    1.5. With 80 percent of the wood excelsior fibers being 6 inches or longer
    1.6. Capable to withstand a maximum shear stress of 1.75 pounds per square foot under ASTM D 6460
    1.7. With a minimum tensile strength of 75 pounds per foot under ASTM D 5035
    1.8. With top and bottom surfaces covered with extruded photodegradable plastic netting or lightweight non-synthetic netting

2. Double net straw and coconut blanket:

    2.1. Classified as ECTC Type 2D
    2.2. Classified as an erosion control blanket
    2.3. Designed to last for at least one year after installation
    2.4. With a USLE C-Factor of not more than 0.20 at a 2:1 (horizontal:vertical) slope
    2.5. Comprised of 70 percent straw and 30 percent coconut fiber
    2.6. Capable to withstand a maximum shear stress of 1.75 pounds per square foot under ASTM D 6460
    2.7. With a minimum tensile strength of 75 pounds per foot under ASTM D 5035
    2.8. With top and bottom surfaces covered with extruded photodegradable plastic netting or lightweight non-synthetic netting

3. Jute netting:

    3.1. Classified as ECTC Type 3B
    3.2. Classified as an open weave textile and have from 14 to 20 strands per foot in each direction
    3.3. Designed to last for at least one year after installation
    3.4. With a USLE C-Factor of not more than 0.25 at a 1.5:1 (horizontal:vertical) slope
    3.5. Comprised of 100 percent unbleached and undyed spun yarn made of jute fiber
    3.6. With an average open area from 63 to 70 percent
    3.7. From 48 to 72 inches in width
    3.8. Capable to withstand a maximum shear stress of 2.0 pounds per square foot under ASTM D 6460
    3.9. With a minimum tensile strength of 100 pounds per foot under ASTM D 5035
    3.10. From 0.90 to 1.20 pounds per square yard in weight

4. Coir netting:

    4.1. Classified as ECTC Type 4
    4.2. Classified as an open weave textile and from 13 to 18 strands per foot in each direction
    4.3. Designed to last for at least three years after installation
    4.4. With a USLE C-Factor of not more than 0.25 at a 1:1 (horizontal:vertical) slope
    4.5. Comprised of 100 percent unbleached and undyed spun coir yarn made of coconut fiber

4.6. With an average open area from 63 to 70 percent
4.7. From 72 to 158 inches in width
4.8. Capable to withstand a maximum shear stress of 2.25 pounds per square foot under ASTM D6460
4.9. With a minimum tensile strength of 125 pounds per foot under ASTM D 5035
4.10. From 1.20 to 1.67 pounds per square yard in weight

Erosion control blanket classified as long-term and non-degradable must:

1. Be a geosynthetic fabric
2. Comply with the specifications for rock slope protection fabric (Class 8) in Section 88-1.06, "Channel and Shore Protection," of the Standard Specifications

Staples

attachment device such as a geosynthetic pins or plastic pegs to install erosion control blanket.

Rock

Rock must comply with:

1. Requirements under Section 72-2.02, "Materials," of the Standard Specifications
2. Following sizes:

Square Screen Size (inch)	Percentage Passing	Percentage Retained
6	100	0
3	0	100

Rope

Rope for fiber rolls must be:

1. Biodegradable, such as sisal or manila
2. At least 1/4 inch in diameter

Fiber Rolls

Fiber rolls must:

1. Last for at least one year after installation
2. Be Type 1 or Type 2

For Type 1, fiber rolls must be:

1. Made from an erosion control blanket classified as temporary and degradable
2. Rolled along the width
3. Secured with natural fiber twine every 6'-6" from each end
4. Finished to be either:

4.1. From 8 to 10 inches in diameter, from 10 to 20 feet long, and at least 0.5 pounds per linear foot

4.2. From 10 to 12 inches in diameter, at least 10 feet long, and at least 2 pounds per linear foot

For Type 2, fiber rolls must:

1. Be filled with rice or wheat straw, wood excelsior, or coconut fiber
2. Be covered with biodegradable jute, sisal, or coir fiber netting
3. Have netting secured tightly at each end
4. Be finished to be either:

    4.1. From 8 to 10 inches in diameter, from 10 to 20 feet long, and at least 1.1 pounds per linear foot
    4.2. From 10 to 12 inches in diameter, at least 10 feet long, and at least 3 pounds per linear foot

Wood Stakes

Wood stakes must be:

1. Untreated fir, redwood, cedar, or pine and cut from sound timber
2. Straight and free of loose or unsound knots and other defects which would render the stakes unfit for use
3. Pointed on the end to be driven into the ground

For fiber rolls, wood stakes must be at least:

1. 1" x 1" x 24" in size for Type 1 installation
2. 1" x 2" x 24" in size for Type 2 installation

Posts

Posts must be wood or metal.

Wood posts must be:

1. Untreated fir, redwood, cedar, or pine and cut from sound timber
2. Straight and free of loose or unsound knots and other defects that would render the stakes unfit for use
3. Pointed on the end to be driven into the ground
4. At least 2" x 2" in size, and 4 feet long

Metal posts must:

1. Be made of steel.
2. Have a "U," "T," "L," or other cross sectional shape that can resist failure from lateral loads.
3. Be pointed on the end to be driven into the ground.
4. Weigh at least 0.75-pound per foot.
5. Be at least 4 feet long.
6. Have a safety cap attached to the exposed end. The safety cap must be orange or red plastic and fit snugly to the metal post.

Silt Fence

Silt fence must be:

1. Constructed with silt fence fabric, posts, and fasteners
2. Prefabricated or assembled at the job site

Silt fence fabric must be attached to posts using these methods:

1. If prefabricated silt fence is used, posts must be inserted into sewn pockets
2. If assembled on the job site:
   2.1. If wood posts are used, fasteners must be staples or nails
   2.2. If steel posts are used, fasteners must be tie wires or locking plastic fasteners
   2.3. Spacing of the fasteners must be at least 8 inches

Gravel-filled Bags

Gravel-filled bags must:

1. Be made from fabric.
2. Have inside dimensions from 24 to 32 inches in length, and from 16 to 20 inches in width.
3. Have the opening bound to retain the gravel. The opening must be sewn with yarn, bound with wire, or secured with a closure device.
4. Weigh from 30 to 50 pounds when filled with gravel.

Gravel for gravel-filled bags must be:

1. From 3/8 to 3/4 inch in diameter
2. Clean and free from clay balls, organic matter, and other deleterious materials

Sediment Filter Bag

Sediment filter bag must:

1. Be made of fabric
2. Be sized to fit the catch basin or drainage inlet
3. Include a high-flow bypass

Sediment filter bag may include a metal frame. Sediment filter bags that do not have a metal frame and are deeper than 18 inches must:

1. Include lifting loops and dump straps
2. Include a restraint cord to keep the sides of the bag away from the walls of the catch basin

Foam Barriers

Foam barriers must:

1. Be filled with a urethane foam core
2. Have a geosynthetic fabric cover and flap
3. Have a triangular, circular, or square shaped cross section
4. Have a vertical height of at least 5 inches after installation
5. Have a horizontal flap of at least 8 inches in width
6. Have a length of at least 4 feet per unit

7. Have the ability to interlock separate units into a longer barrier so that water does not flow between the units
8. Be secured to:
   8.1. Pavement with 1-inch concrete nails with 1-inch washers and solvent-free adhesive
   8.2. Soil with 6-inch nails with 1-inch washers

Rigid Plastic Barriers

Rigid plastic barriers must:

1. Have an integrated filter
2. Have a formed outer jacket of perforated high density polyethylene (HDPE) or polyethylene terephthalate (PET)
3. Have a flattened tubular shaped cross section
4. Be made from virgin or recycled materials
5. Be free from biodegradable filler materials that degrade the physical or chemical characteristics of the finished filter core or outer jacket
6. Have a length of at least 4 feet per unit
7. Have the ability to interlock separate units into a longer barrier so that water does not flow between the units
8. Be secured to:

   8.1 Pavement with 1-inch concrete nails with 1-inch washers and solvent-free adhesive, with gravel-filled bags, or a combination
   8.2 Soil with 6-inch nails with 1-inch washers and wood stakes

9. Comply with the following properties:

Specification	Requirements
Grab tensile strength of outer jacket material, pounds/square inch, min. in each direction ASTM D 4632*	4000
Break strength of outer jacket, pounds/square inch ASTM D 4632*	1300
Permittivity of filter core, 1/sec., min. ASTM D 4491	0.38
Flow rate of filter core, gallons per minute per square foot, ASTM D 4491	100 min. 200 max.
Filter core aperture size, max., Average Opening Size (AOS), microns	425
Ultraviolet stability (outer jacket & filter core), percent tensile strength retained after 500 hours, min. ASTM D 4355 (xenon-arc lamp and water spray weathering method)	90

* or appropriate test method for specific polymer

If used at a curb inlet without a grate, rigid plastic barriers must:

1. Have a horizontal flap of at least 6 inches with an under-seal gasket to prevent underflows
2. Include a high-flow bypass
3. Have a vertical height of at least 7 inches after installation
4. Be sized to fit the catch basin or drainage inlet

If used at a grated catch basin without a curb inlet, rigid plastic barriers must:

1. Cover the grate by at least 2 inches on each side and have an under-seal gasket to prevent underflows

2. Include a high-flow bypass

3. Have a vertical height of at least 1.5 inches after installation

4. Be sized to fit the catch basin or drainage inlet

If used at a curb inlet with a grate, rigid plastic barriers must:
1. Have a horizontal flap that covers the grate by at least 2 inches on the 3 sides away from the curb opening and have an under-seal gasket to prevent underflows
2. Include a high-flow bypass
3. Have a vertical section that covers the curb opening by at least 5 inches after installation
4. Be sized to fit the catch basin or drainage inlet

If used as a linear sediment barrier, rigid plastic barriers:

1. Must have an installed height of at least 6 inches
2. May have a horizontal flap of at least 4 inches

Linear Sediment Barrier

Linear sediment barriers must consist of one or more of the following:

1. Silt fence
2. Gravel-filled bags
3. Fiber roll
4. Rigid plastic barrier
5. Foam barrier

Flexible Sediment Barrier

Flexible sediment barriers consist of one or more of the following:

1. Rigid plastic barrier
2. Foam barrier

CONSTRUCTION

For drainage inlet protection at drainage inlets in paved and unpaved areas:

1. Prevent ponded runoff from encroaching on the traveled way or overtopping the curb or dike. Use linear sediment barriers to redirect runoff and control ponding.
2. Clear the area around each drainage inlet of obstructions including rocks, clods, and debris greater than one inch in diameter before installing the drainage inlet protection.
3. Install a linear sediment barrier up-slope of the existing drainage inlet and parallel with the curb, dike, or flow line to prevent sediment from entering the drainage inlet.

Erosion Control Blanket

To install erosion control blanket and geosynthetic fabric:

1. Secure blanket or fabric to the surface of the excavated sediment trap with staples and embed in a trench adjacent to the drainage inlet
2. Anchor the perimeter edge of the erosion control blanket in a trench

Silt Fence

If silt fence is used as a linear sediment barrier:

1. Place fence along the perimeter of the erosion control blanket, with the posts facing the drainage inlet
2. Install fence with the bottom edge of the silt fence fabric in a trench. Backfill the trench with soil and compact manually

Gravel Bag Berm

As a linear sediment barrier:

1. Place gravel-filled bags end-to-end to eliminate gaps
2. Stack bags in a way that the bags in the top row overlap the joints in the lower row

If gravel bag berms are used for Type 3A and Type 3B:

1. Place gravel-filled bags end-to-end to eliminate gaps
2. Stack bags in a way that the bags in the top row overlap the joints in the lower row
3. Arrange bags to create a spillway by removing one or more gravel-filled bags from the upper layer

If used within shoulder area, place gravel-filled bags behind temporary railing (Type K).

Fiber Rolls

If fiber rolls are used as a linear sediment barrier:

1. Place fiber rolls in a furrow.
2. Secure fiber rolls with stakes installed along the length of the fiber rolls. Stakes must be installed from 6 to 12 inches from the end of the rolls.

If fiber rolls are used as a linear sediment barrier for Type 4A, place them over the erosion control blanket.

Foam Barriers

If foam barriers are used as a linear sediment barrier:

1. Install barriers with the horizontal flap in a 3 inch deep trench and secured with nails and washers placed no more than 4 feet apart
2. Secure barriers with 2 nails at the connection points where separate units overlap
3. Place barriers without nails or stakes piercing the core

Flexible Sediment Barriers

If flexible sediment barriers are used:

1. Secure barriers to the pavement with nails and adhesive, gravel-filled bags, or a combination
2. Install barriers flush against the sides of concrete, asphalt concrete, or hot mix asphalt curbs or dikes
3. Place barriers to provide a tight joint with the curb or dike and anchored in a way that runoff cannot flow behind the barrier

If flexible sediment barriers are used for Type 4B:

1. Secure barriers to the pavement according to the angle and spacing shown on the plans
2. Place barriers to provide a tight joint with the curb or dike. Cut the cover fabric or jacket to ensure a tight fit

Rigid Sediment Barriers

If rigid sediment barriers are used at a grated catch basin without a curb inlet:

1. Place barriers using the gasket to prevent runoff from flowing under the barrier
2. Secure barriers to the pavement with nails and adhesive, gravel-filled bags, or a combination

If rigid sediment barriers are used for linear sediment barriers:

1. Install barriers in a trench. Backfill the trench with soil and compact manually
2. Place barrier with separate units overlapping at least 4 inches
3. Reinforce barriers with a wood stake at each overlap
4. Fasten barriers to the wood stakes with steel screws, 16 gauge galvanized steel wire, or with UV stabilized cable ties that are from 5 to 7 inches in length

Sediment Filter Bags

Install sediment filter bags for Type 5 by:

1. Removing the drainage inlet grate
2. Placing the sediment bag in the opening
3. Replacing the grate to secure the sediment filter bag in place

MAINTENANCE

Maintain temporary drainage inlet protection to provide sediment holding capacity and to reduce runoff velocities.

Remove sediment deposits, trash, and debris from temporary drainage inlet protection as needed or when directed by the Engineer. If removed sediment is deposited within project limits, it must be stabilized and not subject to erosion by wind or water. Trash and debris must be removed and disposed of as specified in Section 7-1.13, "Disposal of Material Outside the Highway Right of Way," of the Standard Specifications.

Maintain temporary drainage inlet protection by removing sediment from:

1. Behind flexible sediment barriers when sediment exceeds 1 inch in depth
2. Surface of the erosion control blanket when sediment exceeds 1 inch in depth
3. Sediment trap for Type 2 when the volume has been reduced by approximately one-half
4. Behind silt fence when the sediment is 1/3 the height of the silt fence fabric above ground
5. Sediment filter bags when filled or when the restraint cords are no longer visible

If rills and other evidence of concentrated runoff occur beneath the linear sediment barrier, repair or adjust the barrier.

If silt fence fabric becomes split, torn, or unraveled, repair or replace silt fence.

If geosynthetic fabric becomes split, torn, or unraveled, repair or replace foam barriers.

Repair or replace sagging or slumping linear sediment barriers with additional stakes. Replace broken or split wood stakes.

Reattach foam barriers and rigid plastic barriers that become detached or dislodged from the pavement.

Repair split or torn rigid plastic barriers with 16 gauge galvanized steel wire or UV stabilized cable ties that are from 5 to 7 inches in length.

For sediment filter bags without metal frames, empty by placing one inch steel reinforcing bars through the lifting loops and then lift the filled bag from the drainage inlet. For sediment filter bags with metal frames, empty by lifting the metal frame from the drainage inlet. Rinse before replacing in the drainage inlet. When rinsing the sediment filter bags, do not allow the rinse water to enter a drain inlet or waterway.

Repair temporary drainage inlet protection within 24 hours of discovering damage unless the Engineer approves a longer period.

If your vehicles, equipment, or activities disturb or displace temporary drainage inlet protection, repair temporary drainage inlet protection at your expense.

The Department does not pay maintenance costs for cleanup, repair, removal, disposal, or replacement due to improper installation or your negligence.

REMOVAL

When the Engineer determines that the temporary drainage inlet protection is not required, it must be removed and disposed of under Section 7-1.13, "Disposal of Material Outside the Highway Right of Way," of the Standard Specifications.

Ground disturbance, including holes and depressions, caused by the installation and removal of the temporary drainage inlet protection must be backfilled and repaired under Section 15-1.02, "Preservation of Property," of the Standard Specifications.

MEASUREMENT AND PAYMENT

Full compensation for Temporary Drainage Inlet Protection is included in the contract lump sum price paid for Erosion Control, and no additional payment will be made therefor.

No additional compensation will be made if the temporary drainage inlet protection is relocated during the course of construction.

The State and you share the cost of maintaining the temporary drainage inlet protection. The State determines the maintenance cost under Section 9-1.03, "Force Account Payment," of the Standard Specifications and pays you one-half of that cost.

13-1.10 CONSTRUCTION AREA TRAFFIC CONTROL DEVICES

Flagging, signs, and temporary traffic control devices furnished, installed, maintained, and removed when no longer required shall conform to the provisions in Section 12, "Construction Area Traffic Control Devices," of the Standard Specifications and these special provisions.

Category 1 temporary traffic control devices are defined as small and lightweight (less than 100 pounds) devices. These devices shall be certified as crashworthy by crash testing, crash testing of similar devices, or years of demonstrable safe performance. Category 1 temporary traffic control devices include traffic cones, plastic drums, portable delineators, and channelizers.

If requested by the Engineer, the Contractor shall provide written self-certification for crashworthiness of Category 1 temporary traffic control devices at least 5 business days before beginning any work using the devices or within 2 business days after the request if the devices are

already in use. Self-certification shall be provided by the manufacturer or Contractor and shall include the following:

A. Date,
B. Federal Aid number (if applicable),
C. Contract number, district, county, route and post mile of project limits,
D. Company name of certifying vendor, street address, city, state and zip code,

E. Printed name, signature and title of certifying person; and
F. Category 1 temporary traffic control devices that will be used on the project.

The Contractor may obtain a standard form for self-certification from the Engineer.

Category 2 temporary traffic control devices are defined as small and lightweight (less than 100 pounds) devices that are not expected to produce significant vehicular velocity change, but may cause potential harm to impacting vehicles. Category 2 temporary traffic control devices include barricades and portable sign supports.

Category 2 temporary traffic control devices shall be on the Federal Highway Administration's (FHWA) list of Acceptable Crashworthy Category 2 Hardware for Work Zones. This list is maintained by FHWA and can be located at:

http://safety.fhwa.dot.gov/roadway_dept/policy_guide/road_hardware/listing.cfm?code=workzone

The Department also maintains this list at:

http://www.dot.ca.gov/hq/traffops/signtech/signdel/pdf/Category2.pdf

2 temporary traffic control devices that have not received FHWA acceptance shall not be used. Category 2 temporary traffic control devices in use that have received FHWA acceptance shall be labeled with the FHWA acceptance letter number and the name of the manufacturer. The label shall be readable and permanently affixed by the manufacturer. Category 2 temporary traffic control devices without a label shall not be used.

, the Contractor shall provide a written list of Category 2 temporary traffic control devices to be used on the project at least 5 business days before beginning any work using the devices or within 2 business days after the request if the devices are already in use.

Category 3 temporary traffic control devices consist of temporary traffic-handling equipment and devices that weigh 100 pounds or more and are expected to produce significant vehicular velocity change to impacting vehicles. Temporary traffic-handling equipment and devices include crash cushions, truck-mounted attenuators, temporary railing, temporary barrier, and end treatments for temporary railing and barrier.

Type III barricades may be used as sign supports if the barricades have been successfully crash tested, meeting the NCHRP Report 350 criteria, as one unit with a construction area sign attached.

Category 3 temporary traffic control devices shall be shown on the plans or on the Department's Highway Safety Features list. This list is maintained by the Division of Engineering Services and can be found at:

http://www.dot.ca.gov/hq/esc/approved_products_list/

Category 3 temporary traffic control devices that are not shown on the plans or not listed on the Department's Highway Safety Features list shall not be used.

Full compensation for providing self-certification for crashworthiness of Category 1 temporary traffic control devices and for providing a list of Category 2 temporary traffic control devices used on the project shall be considered as included in the prices paid for the various items of work requiring

the use of the Category 1 or Category 2 temporary traffic control devices and no additional compensation will be allowed therefor.

13-1.11 CONSTRUCTION AREA SIGNS

Construction area signs for temporary traffic control shall be furnished, installed, maintained, and removed when no longer required in conformance with the provisions in Section 12, "Construction Area Traffic Control Devices," of the Standard Specifications and these special provisions.

Attention is directed to the provisions in "Prequalified and Tested Signing and Delineation Materials" of these special provisions. Type II retroreflective sheeting shall not be used on construction area sign panels. Type III, IV, VII, VIII, or IX retroreflective sheeting shall be used for stationary mounted construction area sign panels.

Unless otherwise shown on the plans or specified in these special provisions, the color of construction area warning and guide signs shall have black legend and border on orange background, except W10-1 or W47(CA) (Highway-Rail Grade Crossing Advance Warning) sign shall have black legend and border on yellow background.

Orange background on construction area signs shall be fluorescent orange.

Repair to construction area sign panels will not be allowed, except when approved by the Engineer. At nighttime under vehicular headlight illumination, sign panels that exhibit irregular luminance, shadowing or dark blotches shall be immediately replaced at the Contractor's expense.

The Contractor shall notify the appropriate regional notification center for operators of subsurface installations at least 2 business days, but not more than 14 days, prior to commencing excavation for construction area sign posts. The regional notification centers include, but are not limited to, the following:

Notification Center	Telephone Number
Underground Service Alert	811

Excavations required to install construction area signs shall be performed by hand methods without the use of power equipment, except that power equipment may be used if it is determined there are no utility facilities in the area of the proposed post holes. The post hole diameter, if backfilled with portland cement concrete, shall be at least 4 inches greater than the longer dimension of the post cross section.

Construction area signs placed within 15 feet from the edge of the travel way shall be mounted on stationary mounted sign supports as specified in "Construction Area Traffic Control Devices" of these special provisions.

The Contractor shall maintain accurate information on construction area signs. Signs that are no longer required shall be immediately covered or removed. Signs that convey inaccurate information shall be immediately replaced or the information shall be corrected. Covers shall be replaced when they no longer cover the signs properly. The Contractor shall immediately restore to the original position and location any sign that is displaced or overturned, from any cause, during the progress of work.

13-1.12 MAINTAINING TRAFFIC

Maintaining traffic shall conform to the provisions in Sections 7-1.08, "Public Convenience," Section 7-1.09, "Public Safety," and Section 12, "Construction Area Traffic Control Devices," of the Standard Specifications and these special provisions.

Closure is defined as the closure of a traffic lane or lanes, including shoulder within a single traffic control system.

Closures shall conform to the provisions in "Traffic Control System for Lane Closure" of these special provisions.

Work that interferes with public traffic shall be limited to the hours when lane closures are allowed, except for work required under Sections 7-1.08, "Public Convenience," and Section 7-1.09, "Public Safety."

The full width of the traveled way shall be open for use by public traffic as shown in the table "Lane Closure Restriction for Designated Legal Holidays" included in this section, "Maintaining Traffic."

Designated legal holidays are: January 1st, the third Monday in February, the last Monday in May, July 4th, the first Monday in September, November 11th, Thanksgiving Day, and December 25th. When a designated legal holiday falls on a Sunday, the following Monday shall be a designated legal holiday. When November 11th falls on a Saturday, the preceding Friday shall be a designated legal holiday.

Local authorities shall be notified at least 5 business days before work begins. The Contractor shall cooperate with local authorities to handle traffic through the work area and shall make arrangements to keep the work area clear of parked vehicles.

During erection of mast arms, the road may be closed and public traffic stopped for periods not to exceed 15 minutes. After one closure is made, accumulated traffic shall pass through the work before another closure is allowed.

Personal vehicles of the Contractor's employees shall not be parked on the traveled way or shoulders including sections closed to public traffic.

When work vehicles or equipment are parked within 6 feet of a traffic lane to perform active construction, the shoulder area shall be closed with fluorescent orange traffic cones or portable delineators placed on a taper in advance of the parked vehicles or equipment and along the edge of the pavement at 25-foot intervals to a point not less than 25 feet past the last vehicle or piece of equipment. A minimum of 9 traffic cones or portable delineators shall be used for the taper. A W20-1 (ROAD WORK AHEAD) or W21-5b (RIGHT/LEFT SHOULDER CLOSED AHEAD) or C24(CA) (SHOULDER WORK AHEAD) sign shall be mounted on a crashworthy portable sign support with flags. The sign shall be placed where designated by the Engineer. The sign shall be a minimum of 48" x 48" in size. The Contractor shall immediately restore to the original position and location a traffic cone or delineator that is displaced or overturned, during the progress of work.

When complete highway closure is required, only one detour for each direction of travel will be allowed for the following operations: erection of girders.

Lane Closure Restriction for Designated Legal Holidays										
Thu	Fri	Sat	Sun	Mon	Tues	Wed	Thu	Fri	Sat	Sun
x	H xx	xx	xx							
	SD xx									
x	xx	H xx	xx							
		SD xx								
	x	xx	H xx	xx						
			SD xx							
	x	xx	xx	H xx	xxx					
	x	xx	xx	SD xx	xxx					
				x	H xx					
				x	SD xx					
					x	H xx				
						SD xx				
						x	H xx	xx	xx	xx
							SD xx			

Legends:

	Refer to lane closure charts
x	The full width of the traveled way shall be open for use by public traffic after __.
xx	The full width of the traveled way shall be open for use by public traffic.
xxx	The full width of the traveled way shall be open for use by public traffic until __.
H	Designated Legal Holiday

Pedestrian access facilities shall be provided through construction areas within the right of way as shown on the plans and as specified herein. Temporary pedestrian walkways, if required, shall be surfaced with hot mix asphalt, portland cement concrete or timber. The surface shall be skid resistant and free of irregularities. Hand railings shall be provided on each side of pedestrian walkways as necessary to protect pedestrian traffic from hazards due to construction operations or adjacent vehicular traffic. Protective overhead covering shall be provided as necessary to insure protection from falling objects and drip from overhead structures.

The sidewalk along the west side of Shoal Creek Drive shall remain open for the duration of the project except during nighttime road closures. The sidewalk on the east side of Shoal Creek Drive within the project limits and the sidewalk on both sides of Ted Williams Parkway east of Shoal Creek Drive and west of Highland Ranch Drive shall be closed to pedestrians for the duration of construction

Railings shall be constructed of wood, S4S, and shall be painted white. Railings and walkways shall be maintained in good condition. Walkways shall be kept clear of obstructions.

Full compensation for providing pedestrian facilities shall be considered as included in the prices paid for the various contract items of work involved and no additional compensation will be allowed therefore.

Chart No. 1
Complete Highway Closure Hours

County:San Diego	Route/Direction: Ted Williams Parkway Both Directions	PM: N/A

Closure Limits: At intersection with Shoal Creek Drive

FROM HOUR TO HOUR	24	1	2	3	4	5	6	7	8	9	10	11	12	13	14	15	16	17	18	19	20	21	22	23	24
Mondays through Thursdays	C	C	C	C																					C
Fridays	C	C	C	C																					C
Saturdays	C	C	C	C	C																				
Sundays																									

Legend:

Do NOT use shading or crosshatching. The "Lane Requirement Chart" toolbar is no longer to be used. 1/2-hour increments can be accomplished by splitting the appropriate cell.

C Highway may be closed completely

No complete highway closure is permitted

REMARKS:
Detour route for erection of girders will divert eastbound Ted Williams Pkwy traffic as follows:
Northbound onto Rancho Carmel Drive
Eastbound onto Carmel Mountain Road
Southbound onto Highland Ranch Road

Westbound Ted Williams Pkwy traffic during erection of girders will be diverted in reverse of the eastbound detour route indicated above

Precast concrete members shall not be cast within the right of way of Ted Williams Parkway or Shoal Creek Drive.

During girder erection, public traffic in the lanes over which girders are being placed shall be detoured or stopped as specified in this section, "Maintaining Traffic."
Erection and removal of falsework at locations where falsework openings are required shall be undertaken one location at a time. During falsework erection and removal, public traffic in the lanes over which falsework is being erected or removed shall be detoured or stopped as specified in this section, "Maintaining Traffic." Falsework erection shall include adjustments or removal of components that contribute to the horizontal stability of the falsework system**.** Falsework removal shall include lowering falsework, blowing sand from sand jacks, turning screws on screw jacks, and removing wedges.

The Contractor shall have necessary materials and equipment on the site to erect the precast bulb-tee girders before stopping public traffic. The contractor shall have necessary equipment on the site to erect falsework in any one span before detouring public traffic.

13-1.13 CLOSURE REQUIREMENTS AND CONDITIONS
Closures shall conform to the provisions in "Maintaining Traffic" of these special provisions and these special provisions.

CLOSURE SCHEDULE

A written schedule of planned closures for the next week period, defined as Monday 9:00 a.m. through Saturday 4:00 p.m., shall be submitted by noon each Monday. A written schedule shall be submitted not less than 25 days and not more than 125 days before the anticipated start of any operation that will:

1. Reduce horizontal clearances, traveled way, including shoulders, to two lanes or less due to such operations as temporary barrier placement, cutting for loop detectors, and paving
2. Reduce the vertical clearances available to the public due to such operations as pavement overlay, overhead sign installation, or falsework or girder erection

The Closure Schedule shall show the locations and times of the proposed closures. The Closure Schedule request forms furnished by the Engineer shall be used. Closure Schedules submitted to the Engineer with incomplete or inaccurate information will be rejected and returned for correction and resubmittal. The Contractor will be notified of disapproved closures or closures that require coordination with other parties as a condition of approval.

Closure Schedule amendments, including adding additional closures, shall be submitted by noon to the Engineer, in writing, at least 3 business days in advance of a planned closure. Approval of Closure Schedule amendments will be at the discretion of the Engineer.

The Engineer shall be notified of cancelled closures 2 business days before the date of closure.

Closures that are cancelled due to unsuitable weather may be rescheduled at the discretion of the Engineer.

CONTINGENCY PLAN

A detailed contingency plan shall be prepared for reopening closures to public traffic. If required by "Beginning of Work, Time of Completion and Liquidated Damages" of these special provisions, the contingency plan shall be submitted to the Engineer before work at the job site begins. Otherwise, the contingency plan shall be submitted to the Engineer within one business day of the Engineer's request.

LATE REOPENING OF CLOSURES

If a closure is not reopened to public traffic by the specified time, work shall be suspended in conformance with the provisions in Section 8-1.05, "Temporary Suspension of Work," of the

Standard Specifications. No further closures are to be made until the Engineer has accepted a work plan, submitted by the Contractor, that will insure that future closures will be reopened to public traffic at the specified time. The Engineer will have 2 business days to accept or reject the Contractor's proposed work plan. The Contractor will not be entitled to compensation for the suspension of work resulting from the late reopening of closures.

COMPENSATION

The Engineer shall be notified of delays in the Contractor's operations due to the following conditions, and if, in the opinion of the Engineer, the Contractor's controlling operation is delayed or interfered with by reason of those conditions, and the Contractor's loss due to that delay could not have been avoided by rescheduling the affected closure or by judicious handling of forces, equipment and plant, the delay will be considered a right of way delay and will be compensated in conformance with the provisions in Section 8-1.09, "Right of Way Delays," of the Standard Specifications:

1. The Contractor's proposed Closure Schedule is denied and his planned closures are within the time frame allowed for closures in "Maintaining Traffic" of these special provisions, except that the Contractor will not be entitled to compensation for amendments to the Closure Schedule that are not approved.
2. The Contractor is denied a confirmed closure.

Should the Engineer direct the Contractor to remove a closure before the time designated in the approved Closure Schedule, delay to the Contractor's schedule due to removal of the closure will be considered a right of way delay and compensation for the delay will be determined in conformance with the provisions in Section 8-1.09, "Right of Way Delays," of the Standard Specifications.

13-1.14 IMPACT ATTENUATOR VEHICLE

GENERAL

Summary

Work includes protecting traffic and workers by using impact attenuator vehicle as a shadow vehicle when placing and removing components of a traffic control system, and when performing a moving lane closure.

Comply with Section 12-3.03, "Flashing Arrow Signs," of the Standard Specifications.

Impact attenuator vehicle must comply with the following test levels under National Cooperative Highway Research Program 350:

1. Test level 3 for pre-construction posted speed limit of 50 mph or more
2. Test levels 2 or 3 for pre-construction posted speed limit of 45 mph or less

Comply with the attenuator manufacturer's recommendations for:

1. Support truck
2. Trailer-mounted operation
3. Truck-mounted operation

Definitions

impact attenuator vehicle: Support truck towing a deployed attenuator mounted to a trailer or support truck with a deployed attenuator mounted to the support truck.

Submittals

Upon request, submit a Certificate of Compliance for attenuator to the Engineer under Section 6-1.07, "Certificates of Compliance," of the Standard Specifications.

Quality Control and Assurance

Attenuator must be a brand listed on the Department's pre-approved list under Highway Safety Features at:

http://www.dot.ca.gov/hq/esc/approved_products_list/

MATERIALS

The combined weight of the support truck and the attenuator must be at least 19,800 pounds, except the weight of the support truck must not be less than 16,100 pounds or greater than 26,400 pounds.

If using the Trinity MPS-350 truck-mounted attenuator, the support truck must not have any underneath fuel tank mounted within 10'-6" of the rear of the support truck.

Each impact attenuator vehicle must:

1. Have standard brake lights, taillights, sidelights, and turn signals
2. Have an inverted "V" chevron pattern placed across the entire rear of the attenuator composed of alternating 4 inch wide non-reflective black stripes and 4 inch wide yellow retroreflective stripes sloping at 45 degrees
3. Have a Type II flashing arrow sign
4. Have a flashing or rotating amber light
5. Have an operable 2-way communication system for maintaining contact with workers

CONSTRUCTION

Use impact attenuator vehicle to follow behind equipment and workers who are placing and removing components of a traffic control system for a lane closure. Flashing arrow sign must be operating in arrow mode during this activity. Follow at a distance to prevent intrusion into the workspace from passing traffic.

After placing components of a traffic control system for a lane closure you may use impact attenuator vehicle in a closed lane and in advance of a work area to protect traffic and workers.

Use impact attenuator vehicle as a shadow vehicle under traffic control for a moving lane closure.

Secure objects including equipment, tools and ballast on impact attenuator vehicle to prevent loosening upon impact by an errant vehicle.

Do not use a damaged attenuator in the work. Replace, at your expense, an attenuator damaged from an impact during work.

MEASUREMENT AND PAYMENT

Full compensation for furnishing and operating impact attenuator vehicle is included in the contract lump sum price paid for traffic control, and no additional compensation will be allowed therefor.

13-1.15 TRAFFIC CONTROL SYSTEM FOR LANE CLOSURE

A traffic control system shall consist of closing traffic lanes in conformance with the details shown on the plans, the provisions in Section 12, "Construction Area Traffic Control Devices," of the Standard Specifications, the provisions under "Maintaining Traffic" and "Construction Area Signs" of these special provisions, and these special provisions.

The provisions in this section will not relieve the Contractor from the responsibility to provide additional devices or take measures as may be necessary to comply with the provisions in Section 7-1.09, "Public Safety," of the Standard Specifications.

Each vehicle used to place, maintain and remove components of a traffic control system on multilane highways shall be equipped with a Type II flashing arrow sign which shall be in operation when the vehicle is being used for placing, maintaining or removing components. Vehicles equipped with Type II flashing arrow sign not involved in placing, maintaining or removing components when operated within a stationary lane closure shall only display the caution display mode. The sign shall be controllable by the operator of the vehicle while the vehicle is in motion. The flashing arrow sign shown on the plans shall not be used on vehicles which are being used to place, maintain and remove components of a traffic control system and shall be in place before a lane closure requiring its use is completed.

If components in the traffic control system are displaced or cease to operate or function as specified, from any cause, during the progress of the work, the Contractor shall immediately repair the components to the original condition or replace the components and shall restore the components to the original location.

When lane closures are made for work periods only, at the end of each work period, components of the traffic control system, except portable delineators placed along open trenches or excavation adjacent to the traveled way, shall be removed from the traveled way and shoulder. If the Contractor so elects, the components may be stored at selected central locations designated by the Engineer within the limits of the highway right of way.

Traffic Control as shown on the plans including construction area signs, delineators, and flashing arrows boards will be paid on a lump sum basis, which lump sum price shall include full compensation for furnishing all labor, materials, tools, equipment, and for doing all the work involved in furnishing construction area signs required for the direction of public traffic through or around the work and erecting or placing, maintaining (including covering and uncovering as needed) and when no longer required, removing traffic control at locations shown on the plans.Traffic Control as shown on the plans including construction area signs, delineators, and flashing arrows boards will be paid on a lump sum basis, which lump sum price shall include full compensation for furnishing all labor, materials, tools, equipment, and for doing all the work involved in furnishing construction area signs required for the direction of public traffic through or around the work and erecting or placing, maintaining (including covering and uncovering as needed) and when no longer required, removing traffic control at locations shown on the plans.

The adjustment provisions in Section 4-1.03, "Changes," of the Standard Specifications shall not apply to the item of traffic control. Adjustments in compensation for traffic control will be made only for increased or decreased traffic control required by changes ordered by the Engineer and will be made on the basis of the cost of the increased or decreased traffic control necessary. The adjustment will be made on a force account basis as provided in Section 9-1.03, "Force Account Payment," of the Standard Specifications for increased work and estimated on the same basis in the case of decreased work.

Traffic control required by work which is classed as extra work, as provided in Section 4-1.03D of the Standard Specifications, will be paid for as a part of the extra work.

13-1.16 EXISTING HIGHWAY FACILITIES

The work performed in connection with various existing highway facilities shall conform to the provisions in Section 15, "Existing Highway Facilities," of the Standard Specifications and these special provisions.

ABANDON PIPELINE

Existing culverts and utility pipelines, where shown on the plans to be abandoned, shall be abandoned in place or, at the option of the Contractor, the culverts and pipelines shall be removed and disposed of. Resulting openings into existing structures that are to remain in place shall be plugged with concrete conforming to the provisions in Section 90-10 "Minor Concrete," of the Standard Specifications. The concrete shall contain not less than 505 pounds of cementitious material per cubic yard.

Abandoning pipelines in place shall conform to the following:

1. Pipelines that intersect the side slopes shall be removed to a depth of not less than 3 feet measured normal to the plane of the finished side slope, before being abandoned.
2. Pipelines 12 inches in diameter and larger, shall, at the Contractor's option, be backfilled with either sand, controlled low strength material or slurry cement backfill conforming to the provisions in Section 19-3.062, "Slurry Cement Backfill," of the Standard Specifications by any method acceptable to the Engineer that completely fills the pipe. Sand backfill material shall be clean, free draining, and free from roots and other deleterious substances.
3. The ends of culverts and pipelines shall be securely closed by a 0.5-foot thick tight fitting plug or wall of commercial quality concrete.

Pipelines shall not be abandoned until their use is no longer required. The Contractor shall notify the Engineer in advance of any intended culvert or pipeline abandonment. Portions of the existing waterline to be taken out of service that are not in conflict with improvements shall be abandoned in place as shown on the plans.

The contract price paid per linear foot for abandon pipeline shall include full compensation for furnishing all labor, materials, tools, equipment, and incidentals and for doing all the work involved in placing concrete plugs, pipe removal, structure excavation, and backfill (including sand, controlled low strength material or slurry cement backfillas shown on the plans, as specified in the Standard Specifications and these special provisions, and as directed by the Engineer and no additional compensation will be allowed therefore.

WATERLINE RELOCATION

This work includes relocating the waterline at the location shown on the plans and shall be in conformance with the details shown on the plans and these special provisions.

Plastic pipe shall conform to the provisions in Section 64, "Plastic Pipe," of the Standard Specifications and these special provisions.

Conduits shall be installed in open trenches and shall conform to the provisions in Section 20-5.03B, "Conduit for Irrigation Crossovers," of the Standard Specifications. Conduits shall be PVC pipe.

Water line crossovers shall conform to the provisions in Section 20-5.03C, "Water Line Crossovers," of the Standard Specifications.

Conduits to be installed under existing pavement shall be installed in a trench approximately 12 inches wider than the outside diameter of the conduit to be installed. The top of the installed conduit shall be a minimum of 24 inches below finished grade.

Portland cement concrete curbs, concrete drainage gutters and asphalt concrete dikes shall not be cut or removed for installation of conduits.

The outline of areas of surfacing to be removed shall be cut with an abrasive type saw or a rock cutting excavator specifically designed for this purpose. The minimum depth of cuts in asphalt concrete and portland cement concrete shall be 0.17-foot. Cuts shall be neat and true with no shatter outside the removal area. Removed asphalt concrete, portland cement concrete and surplus excavated material shall be disposed of in conformance with the provisions in Section 7-1.13, "Disposal of Material Outside the Highway Right of Way," of the Standard Specifications.

Backfill for trenches shall be structure backfill conforming to the provisions in Section 19-3.06, "Structure Backfill," of the Standard Specifications.

The compacted thicknesses of the replacement underlying material, hot mix asphalt (HMA) and portland cement concrete shall be not less than the thickness of the respective material removed as specified above. The finished surface of the HMA and portland cement concrete shall be flush with the adjacent surface. Where HMA surfacing or portland cement concrete is placed adjacent to curbs, the finished surface of the HMA surfacing and portland cement concrete shall be flush with the top of the adjacent curb.

HMA for replacing removed asphalt concrete surfacing and facilities shall conform to the following requirements:

1. HMA shall be produced at a central mixing plant.
2. Paving asphalt and aggregates shall be commercial quality.
3. The amount of asphalt binder to be mixed with the aggregate shall be between 5 percent and 10 percent by weight of the dry aggregate. The exact amount will be determined by the Engineer.
4. The aggregate shall have a Sand Equivalent value of not less than 30.
5. The aggregate shall conform to the 3/8 inch grading specified for Type B hot mix asphalt in Section 39-1.02E, "Aggregate," of the Standard Specifications.
6. A Certificate of Compliance shall be furnished to the Engineer in conformance with the provisions in Section 6-1.07, "Certificates of Compliance," of the Standard Specifications.

HMA shall be spread at a temperature of not less than 250° F. HMA shall be spread and compacted by methods that will produce a hot mix asphalt surfacing of uniform smoothness and texture.

HMA placed in trenches may be placed in one layer provided the compacted thickness is 0.25-foot or less.

HMA shall be thoroughly compacted. Where practicable, HMA shall be rolled with power rollers. Where the power rollers cannot be operated, compaction shall be obtained by hand rollers or an impactor.

Concrete for replacing removed concrete facilities shall be minor concrete conforming to the provisions in Section 90-10, "Minor Concrete," of the Standard Specifications. Placing and finishing

concrete for removed concrete facilities shall be performed by methods which will produce a concrete surface of uniform smoothness, color and texture equal to or better than the adjacent concrete surface.

The contract price paid per linear foot for waterline relocation shall include full compensation for furnishing all labor, materials, tools, equipment, and incidentals and for doing all the work involved in excavation of the trench, cap removal, preparation of the subgrade, backfill of the trench, replacement of the trench cap in kind, installation of bends and thrust blocks, testing of the waterline, as shown on the plans, as specified in the Standard Specifications and these special provisions, and as directed by the Engineer and no additional compensation will be allowed therefor.

CITY FORCES WORK

The City of San Diego will make all reconnections to the existing main as shown on the drawings. Contractor shall install waterline to within five feet of the connection locations with the City of San Diego public waterline. Contractor shall be responsible for protection and keeping the existing main in service without service interruptions during construction of the new waterline. The contractor shall arrange for final connections to be performed by the City Forces and pay all fees to the City for this work once the new waterline has been installed. Payment for City Forces work shall be an allowance.

Upon completion of the City Forces work the Contractor shall complete the backfill, trench cap and other appurtenant work in accordance with the methods and payment specified under the waterline relocation item of work of these special provisions.

REMOVE PAVEMENT MARKER

Existing pavement markers, including underlying adhesive, when no longer required for traffic lane delineation as determined by the Engineer, shall be removed and disposed of.

Full compensation for removing and disposing of pavement markers and underlying adhesive shall be considered as included in the contract price paid per ton for asphalt concrete pavement (HMA) and no separate payment will be made therefore.

REMOVE TRAFFIC STRIPE AND PAVEMENT MARKING

This work includes removing existing traffic stripe and pavement marking at the locations shown on the plans.

Submit a lead compliance plan under Section 7-1.07, "Lead Compliance Plan," of the Standard Specifications.

Waste residue from removal of thermoplastic and painted traffic stripe and pavement marking is a non–hazardous waste residue and contains lead in average concentrations less than 1000 mg/kg total lead and 5 mg/L soluble lead. This waste residue does not contain heavy metals in concentrations that exceed thresholds established by the Health and Safety Code and 22 CA Code of Regs and is not regulated under the Federal Resource Conservation and Recovery Act (RCRA), 42 USC § 6901 et seq.

Full compensation for Remove Traffic Stripe and Pavement Marking is included in the contract lump sum price paid for Traffic Stripes and Pavement Markings, and no separate payment will be made therefor.

REMOVE ROADSIDE SIGN

Existing roadside signs, at those locations shown on the plans to be removed, shall be removed and disposed of.

Existing roadside signs shall not be removed until replacement signs have been installed or until the existing signs are no longer required for the direction of public traffic, unless otherwise directed by the Engineer.

Full compensation for Remove Roadside Sign is included in the contract lump sum price paid for Traffic Stripes and Pavement Markings, and no separate payment will be made therefor.

RELOCATE ROADSIDE SIGN

Existing roadside signs shall be removed and relocated to the new locations shown on the plans.

Each roadside sign shall be installed at the new location on the same day that the sign is removed from its original location.

Two holes shall be drilled in each existing post as required to provide the breakaway feature shown on the plans.

Full compensation for Relocate Roadside Sign is included in the contract lump sum price paid for Traffic Stripes and Pavement Markings, and no separate payment will be made therefor.

EXISTING HIGHWAY IRRIGATION FACILITIES

Existing irrigation facilities within the construction easement and outside the construction impact area shall remain in place. Irrigation facilities that are damaged by the Contractor's operation shall be reported immediately to the Engineer.

Locations of below-ground irrigation facilities shown on plans are estimated, and may not include all facilities. Contractor shall coordinate with maintenance company to locate and mark existing below ground irrigation facilities. Marked and unmarked Irrigation facilities damaged by the Contractor's operations shall be repaired or replaced at the Contractor's expense.

Water shall be maintained in conformance with the provisions in Section 20-5.025, "Maintain Existing Water Supply," of the Standard Specifications.

13-1.17 CLEARING AND GRUBBING

Clearing and grubbing shall conform to the provisions in Section 16, "Clearing and Grubbing," of the Standard Specifications and these special provisions.

Vegetation shall be cleared and grubbed only within the excavation and embankment slope lines.

13-1.18 GRADING

Grading shall conform to the provisions in Section 19, "Earthwork," of the Standard Specifications and these special provisions. Grading shall also include the removal of existing surfaces including roadway excavation and minor grading.

Where a portion of the existing surfacing is to be removed, the outline of the area to be removed shall be cut on a neat line with a power-driven saw to a minimum depth of 0.17-foot before removing the surfacingReinforcement or metal attached to reinforced concrete rubble placed in embankments shall not protrude above the grading plane. Prior to placement within 2 feet below the grading plane of embankments, reinforcement or metal shall be trimmed to no greater than 3/4 inch from the face of reinforced concrete rubble. Full compensation for trimming reinforcement or metal shall be considered as included in the contract prices paid per cubic yard for the types of excavation shown in the Engineer's estimate, or the contract prices paid for furnishing and placing imported borrow or embankment material, as the case may be, and no additional compensation will be allowed therefor.

MEASUREMENT AND PAYMENT
Grading will be measured and paid for by the cubic yard.

The contract price paid per square foot for grading shall include full compensation for furnishing all labor, materials, tools, equipment, and incidentals and for doing all the work involved in excavation, sloping, rounding tops and ends of excavations, loading, disposing of surplus material, stockpiling, hauling material to its final location, cutting existing surfacing, as shown on the plans, as specified in the Standard Specifications and these special provisions, and as directed by the Engineer.

Structure excavation and structure backfill shall be paid for separately.

13-1.19 EARTHWORK
Earthwork shall conform to the provisions in Section 19, "Earthwork," of the Standard Specifications and these special provisions.
Surplus excavated material shall become the property of the Contractor and shall be disposed of in conformance with the provisions in Section 7-1.13, "Disposal of Material Outside the Highway Right of Way," of the Standard Specifications.
Reinforcement or metal attached to reinforced concrete rubble placed in embankments shall not protrude above the grading plane. Prior to placement within 2 feet below the grading plane of embankments, reinforcement or metal shall be trimmed to no greater than 3/4 inch from the face of reinforced concrete rubble. Full compensation for trimming reinforcement or metal shall be considered as included in the contract prices paid per cubic yard for the types of excavation shown in the Engineer's estimate, or the contract prices paid for furnishing and placing imported borrow or embankment material, as the case may be, and no additional compensation will be allowed therefor.

Imported borrow shall be mineral material including rock, sand, gravel, or earth. The Contractor shall not use man-made refuse in imported borrow including:

A. Portland cement concrete
B. Asphalt concrete
C. Hot mix asphalt
D. Material planed from roadway surfaces
E. Residue from grooving or grinding operations
F. Metal
G. Rubber
H. Mixed debris
I. Rubble

At Bent 5, undocumented fill below the bottom of bridge footing shall be removed and replaced with slurry cement backfill conforming to the provisions in Section 19-3.062, "Slurry Cement Backfill," of the Standard Specifications. Removal of the material will be measured and paid for by the cubic yard as structure excavation (bridge) and furnishing, placing, and compacting the replacement material will be measured and paid for by the cubic yard as structure backfill (bridge).

If the Contractor elects to use the "Weep Hole and Geocomposite Drain" alternative where permitted on the plans, the geocomposite drain shall conform to the details shown on the plans and the following:

A. Geocomposite wall drain shall consist of a manufactured core not less than 0.25 inch thick nor more than 2 inches thick with one or both sides covered with a layer of filter fabric that will provide a drainage void. The drain shall produce a flow rate through the drainage void of at least 2.0 gallons per minute per foot of width at a hydraulic gradient of 1.0 and a

Pervious backfill material placed within the limits of payment for bridges will be measured and paid for as structure backfill (bridge).

Pervious backfill material placed within the limits of payment for retaining walls will be measured and paid for as structure backfill (retaining wall).

If structure excavation or structure backfill for bridges is not otherwise designated by type and payment for the structure excavation or structure backfill has not otherwise been provided for in the Standard Specifications or these special provisions, the structure excavation or structure backfill will be measured and paid for as structure excavation (bridge) or structure backfill (bridge), respectively.

13-1.20 IRRIGATION CROSSOVERS

"Irrigation crossovers" shall refer to irrigation sleeves under existing and proposed walkways, and conform to the provisions in Section 20-5, "Irrigation Systems," of the Standard Specifications and these special provisions.

Sleeves shall be placed in open trenches in conformance with the provisions in Section 20-5.03B, "Conduit for Irrigation Crossovers," of the Standard Specifications. Trench and place sleeve prior to installation of new walkways.

Sleeves for irrigation pipe shall be PVC pipe 2 times the size of irrigation pipe. Conduits for electrical or other components shall be PVC pipe 2 times the size of wire bundles.
Fittings (i.e. caps, where needed) for water line crossovers shall be Schedule 80. Sleeves and conduits shall not include bends, bells, or tees unless shown on plans.

13-1.21 IMPORTED TOPSOIL

GENERAL

Summary

This work includes applying and consolidating topsoil.

MATERIAL

Comply with Section 20-2.01, "Topsoil," of the Standard Specifications.

CONSTRUCTION

Comply with Section 20-3.02, "Preparation," of the Standard Specifications.
Spread topsoil to a uniform thickness.

Trackwalk topsoil with tracked equipment run perpendicular to slope contours. Water may be used to assist this process but must not cause erosion.

13-1.22 PILING

GENERAL

Piling shall conform to the provisions in Section 49, "Piling," of the Standard Specifications, and these special provisions.

Difficult pile installation is anticipated due to the presence of granitic rock, perched groundwater, traffic control and underground utilities.

CAST-IN-DRILLED-HOLE CONCRETE PILES

GENERAL

Summary

Cast-in-drilled-hole (CIDH) concrete piling shall conform to the provisions in Section 49-4, "Cast-In-Place Concrete Piles," of the Standard Specifications and these special provisions.

The provisions of "Welding" of these special provisions shall not apply to temporary steel casings.

SUBMITTALS

Pile Installation Plan

The Contractor shall submit a pile installation plan to the Engineer for approval for all CIDH concrete piling. The pile installation plan shall be submitted at least 15 days before constructing CIDH concrete piling and shall include complete descriptions, details, and supporting calculations for the following:

A. Concrete mix design, certified test data, and trial batch reports.
B. Drilling or coring methods and equipment.
C. Proposed method for casing installation and removal when necessary.
D. Plan view drawing of pile showing reinforcement. Include inspection pipes on the drawing if inspection pipes are required.
E. Methods for placing, positioning, and supporting bar reinforcement.
F. Methods and equipment for determining the depth of concrete and actual and theoretical volume placed, including effects on volume of concrete when any casings are withdrawn.
G. Methods and equipment for verifying that the bottom of the drilled hole is clean before placing concrete.
H. Methods and equipment for preventing upward movement of reinforcement, including the Contractor's means of detecting and measuring upward movement during concrete placement operations.

For concrete placed under slurry, the pile installation plan shall also include complete descriptions, details, and supporting calculations for the following:

A. Concrete batching, delivery, and placing systems, including time schedules and capacities. Time schedules shall include the time required for each concrete placing operation at each pile.
B. Concrete placing rate calculations. When requested by the Engineer, calculations shall be based on the initial pump pressures or static head on the concrete and losses throughout the placing system, including anticipated head of slurry and concrete to be displaced.
C. Suppliers' test reports on the physical and chemical properties of the slurry and any proposed slurry chemical additives, including Material Safety Data Sheet.
D. Slurry testing equipment and procedures.
E. Methods of removal and disposal of excavation, slurry, and contaminated concrete, including removal rates.
F. Methods and equipment for slurry agitating, recirculating, and cleaning.

QUALITY ASSURANCE

Concrete Test Batch

Before concrete is deposited under slurry, a concrete test batch shall be produced and delivered to the project under conditions and in time periods similar to those expected during placement of concrete in the piles. Concrete shall be placed in an excavated hole or suitable container of adequate size to allow for testing as specified herein. Depositing of concrete under slurry will not be required. In addition to meeting the specified nominal slump, the concrete test batch shall meet the following requirements:

A. For piles where the time required for each concrete placing operation, as submitted in the placing plan, will be 2 hours or less, the concrete test batch shall demonstrate that the proposed concrete mix design achieves a slump of at least 7 inches after twice that time has elapsed.
B. For piles where the time required for each concrete placing operation, as submitted in the placing plan, will be more than 2 hours, the concrete test batch shall demonstrate that the proposed concrete mix design achieves a slump of at least 7 inches after that time plus 2 hours has elapsed.

The time period shall begin at the start of placement. Concrete shall not be vibrated or agitated during the test period. Slump tests will be performed in conformance with the requirements in California Test 556.

Upon completion of testing, concrete shall be disposed of in conformance with the provisions in Section 7-1.13, "Disposal of Material Outside the Highway Right of Way," of the Standard Specifications.

MATERIALS

Concrete

Concrete deposited under slurry shall have a nominal slump equal to or greater than 7 inches, contain not less than 675 pounds of cementitious material per cubic yard, and be proportioned to prevent excessive bleed water and segregation. The nominal and maximum slump and penetration requirements in Section 90-6.06, "Amount of Water and Penetration," of the Standard Specifications shall not apply.

Aggregate Grading

The combined aggregate grading shall be either the 1-inch maximum grading, the 1/2-inch maximum grading, or the 3/8-inch maximum grading and shall conform to the requirements in Section 90-3, "Aggregate Gradings," of the Standard Specifications.

When concrete is placed under slurry, the combined aggregate grading shall be either the 1/2-inch maximum grading or the 3/8-inch maximum grading and shall conform to the requirements in Section 90-3, "Aggregate Gradings," of the Standard Specifications.

Slurry

Mineral Slurry

Mineral slurry shall be mixed and thoroughly hydrated in slurry tanks, and slurry shall be sampled from the slurry tanks and tested before placement in the drilled hole.

Slurry shall be recirculated or continuously agitated in the drilled hole to maintain the specified properties.

Recirculation shall include removal of drill cuttings from the slurry before discharging the slurry back into the drilled hole. When recirculation is used, the slurry shall be sampled and tested at least every 2 hours after beginning its use until tests show that the samples taken from the slurry tank and from near the bottom of the hole have consistent specified properties. Subsequently, slurry shall be sampled at least twice per shift as long as the specified properties remain consistent.

Slurry that is not recirculated in the drilled hole shall be sampled and tested at least every 2 hours after beginning its use. The slurry shall be sampled mid-height and near the bottom of the hole. Slurry shall be recirculated when tests show that the samples taken from mid-height and near the bottom of the hole do not have consistent specified properties.

Slurry shall also be sampled and tested before final cleaning of the bottom of the hole and again just before placing concrete. Samples shall be taken from mid-height and near the bottom of the hole. Cleaning of the bottom of the hole and placement of the concrete shall not start until tests show that the samples taken from mid-height and near the bottom of the hole have consistent specified properties.

Mineral slurry shall be tested for conformance to the requirements shown in the following table:

MINERAL SLURRY		
PROPERTY	REQUIREMENT	TEST
Density (pcf) - before placement in the drilled hole - during drilling - before final cleaning - immediately before placing concrete	 64.3* to 69.1* 64.3* to 75.0*	 Mud Weight (Density) API 13B-1 Section 1
Viscosity (seconds/quart) bentonite attapulgite	 28 to 50 28 to 40	Marsh Funnel and Cup API 13B-1 Section 2.2
pH	8 to 10.5	Glass Electrode pH Meter or pH Paper
Sand Content (percent) - before final cleaning - immediately before placing concrete	 less than or equal to 4.0	 Sand API 13B-1 Section 5
*When approved by the Engineer, slurry may be used in salt water, and the allowable densities may be increased up to 2 pcf. Slurry temperature shall be at least 40°F when tested.		

Any caked slurry on the sides or bottom of hole shall be removed before placing reinforcement. If concrete is not placed immediately after placing reinforcement, the reinforcement shall be removed and cleaned of slurry, the sides of the drilled hole cleaned of caked slurry, and the reinforcement again placed in the hole for concrete placement.

Synthetic Slurry

Synthetic slurries shall be used in conformance with the manufacturer's recommendations and these special provisions. The following synthetic slurries or equal may be used:

PRODUCT	MANUFACTURER
SlurryPro CDP	KB Technologies Ltd. 3648 FM 1960 West Suite 107 Houston, TX 77068 (800) 525-5237
Super Mud	PDS Company c/o Champion Equipment Company 8140 East Rosecrans Ave. Paramount, CA 90723 (562) 634-8180
Shore Pac GCV	CETCO Drilling Products Group 1350 West Shure Drive Arlington Heights, IL 60004 (847) 392-5800
Novagel Polymer	Geo-Tech Drilling Fluids 220 N. Zapata Hwy, Suite 11A Laredo, TX 78043 (210) 587-4758

Inclusion of synthetic slurry on the above list may be obtained by meeting the Department's requirements for synthetic slurries. The requirements can be obtained from the Offices of Structures Design, P.O. Box 168041, MS# 9-4/11G, Sacramento, CA 95816-8041.

Synthetic slurries listed may not be appropriate for a given site.

Synthetic slurries shall not be used in holes drilled in primarily soft or very soft cohesive soils as determined by the Engineer.

A manufacturer's representative, as approved by the Engineer, shall provide technical assistance for the use of their product, shall be at the site before introduction of the synthetic slurry into a drilled hole, and shall remain at the site until released by the Engineer.

Synthetic slurries shall be sampled and tested at both mid-height and near the bottom of the drilled hole. Samples shall be taken and tested during drilling as necessary to verify the control of the properties of the slurry. Samples shall be taken and tested when drilling is complete, but before final cleaning of the bottom of the hole. When samples are in conformance with the requirements shown in the following tables for each slurry product, the bottom of the hole shall be cleaned and any loose or settled material removed. Samples shall be obtained and tested after final cleaning and immediately before placing concrete.

SlurryPro CDP synthetic slurries shall be tested for conformance to the requirements shown in the following table:

SLURRYPRO CDP KB Technologies Ltd.		
PROPERTY	REQUIREMENT	TEST
Density (pcf) - during drilling - before final cleaning - just before placing concrete	 less than or equal to 67.0* less than or equal to 64.0*	Mud Weight (Density) API 13B-1 Section 1
Viscosity (seconds/quart) - during drilling -before final cleaning - just before placing concrete	 50 to 120 less than or equal to 70	Marsh Funnel and Cup API 13B-1 Section 2.2
pH	6 to 11.5	Glass Electrode pH Meter or pH Paper
Sand Content (percent) - before final cleaning - just before placing concrete	 less than or equal to 0.5	Sand API 13B-1 Section 5
*When approved by the Engineer, slurry may be used in salt water, and the allowable densities may be increased up to 2 pcf. Slurry temperature shall be at least 40°F when tested.		

Super Mud synthetic slurries shall be tested for conformance to the requirements shown in the following table:

SUPER MUD PDS Company		
PROPERTY	REQUIREMENT	TEST
Density (pcf) - before final cleaning - just before placing concrete	less than or equal to 64.0*	Mud Weight (Density) API 13B-1 Section 1
Viscosity (seconds/quart) - during drilling - before final cleaning - just before placing concrete	32 to 60 less than or equal to 60	Marsh Funnel and Cup API 13B-1 Section 2.2
pH	8 to 10.0	Glass Electrode pH Meter or pH Paper
Sand Content (percent) - before final cleaning -just before placing concrete	less than or equal to 0.5	Sand API 13B-1 Section 5
*When approved by the Engineer, slurry may be used in salt water, and the allowable densities may be increased up to 2 pcf. Slurry temperature shall be at least 40°F when tested.		

Shore Pac GCV synthetic slurries shall be tested for conformance to the requirements shown in the following table:

Shore Pac GCV CETCO Drilling Products Group		
PROPERTY	REQUIREMENT	TEST
Density (pcf) - before final cleaning - just before placing concrete	less than or equal to 64.0*	Mud Weight (Density) API 13B-1 Section 1
Viscosity (seconds/quart) - during drilling	33 to 74	Marsh Funnel and Cup API 13B-1 Section 2.2
- before final cleaning - just before placing concrete	less than or equal to 57	
pH	8.0 to 11.0	Glass Electrode pH Meter or pH Paper
Sand Content (percent) - before final cleaning -just before placing concrete	less than or equal to 0.5	Sand API 13B-1 Section 5
*When approved by the Engineer, slurry may be used in salt water, and the allowable densities may be increased up to 2 pcf. Slurry temperature shall be at least 40°F when tested.		

Novagel Polymer synthetic slurries shall be tested for conformance to the requirements shown in the following table:

NOVAGEL POLYMER Geo-Tech Drilling Fluids		
PROPERTY	REQUIREMENT	TEST
Density (pcf) - during drilling - before final cleaning - just before placing concrete	 less than or equal to 67.0* less than or equal to 64.0*	Mud Weight (Density) API 13B-1 Section 1
Viscosity (seconds/quart) - during drilling - before final cleaning - just before placing concrete	 45 to 104 less than or equal to 104	Marsh Funnel and Cup API 13B-1 Section 2.2
pH	6.0 to 11.5	Glass Electrode pH Meter or pH Paper
Sand Content (percent) - before final cleaning -just before placing concrete	 less than or equal to 0.5	Sand API 13B-1 Section 5
*When approved by the Engineer, slurry may be used in salt water, and the allowable densities may be increased up to 2 pcf. Slurry temperature shall be at least 40°F when tested.		

Water Slurry

At the option of the Contractor, water may be used as slurry when casing is used for the entire length of the drilled hole.

Water slurry shall be tested for conformance to the requirements shown in the following table:

WATER SLURRY		
PROPERTY	REQUIREMENT	TEST
Density (pcf) - before final cleaning - just before placing concrete	63.5*	Mud Weight (Density) API 13B-1 Section 1
Sand Content (percent) - before final cleaning -just before placing concrete	less than or equal to 0.5	Sand API 13B-1 Section 5
*When approved by the Engineer, salt water slurry may be used and the allowable densities may be increased up to 2 pcf.		

CONSTRUCTION

General

CIDH concrete piling 24 inches in diameter or larger may be constructed by excavation and depositing concrete under slurry.

Portions of CIDH concrete piling shown on the plans to be formed shall be formed and finished in conformance with the provisions for concrete structures in Section 51, "Concrete Structures," of the Standard Specifications.

Reinforcement shall extend to 6 inches clear of the bottom of the drilled hole when the hole is drilled below the specified tip elevation.

Permanent Steel Casing Installation

Permanent steel casings shall be installed by impact or vibratory hammers, oscillators, rotators, or by placing in a drilled hole. The provisions of Section 49-1.08, "Pile Driving Acceptance Criteria," of the Standard Specifications shall not apply to permanent steel casings.

Permanent steel casings placed in a drilled hole shall conform to the following requirements:

A. Casings shall be positioned with spacers to center the casing inside the drilled hole. Spacers may be welded to the outside of the casing.
B. Voids in the annular space between the casing and the soil shall be filled with grout.

C. Grout shall be placed from the bottom of the casing using grout tubes. Placement of grout shall continue until all voids have been filled and the grout reaches the top of the casing. Free fall of the grout from the top to the bottom of the casing will not be allowed.
D. Grout shall be pumped into the annular space such that the grout head is maintained uniformly around the casing and no visible evidence of water or air is ejected at the top of the grout.
E. One grout tube shall be placed every 4 feet along the circumference of the casing with a minimum of 4 grout tubes per casing.
F. Grout tubes shall extend down to no less than 1 foot from the bottom of the casing.

If the Contractor elects to construct the optional construction joint shown on the plans for CIDH concrete piling and a permanent steel casing is not shown on the plans, the Contractor shall furnish and install a casing that:

A. Remains permanently in place.
B. Is watertight and of sufficient strength to prevent damage and to withstand the loads from installation procedures, drilling and tooling equipment, lateral concrete pressures, and earth pressures.
C. Extends to an elevation at least 5 feet below the construction joint.
D. Does not extend above the top of the drilled hole or final grade whichever is lower.
E. Conforms to the requirements in Section 5-1.02A, "Excavation Safety Plans," of the Standard Specifications.
F. Does not increase the diameter of the CIDH concrete piling more than 2 feet.
G. Is installed in conformance with the installation requirements for permanent steel casings.

Placing Concrete

Concrete deposited under slurry shall be carefully placed in a compact, monolithic mass and by a method that will prevent washing of the concrete. Concrete deposited under slurry need not be vibrated. Placing concrete shall be a continuous operation lasting not more than the time required for each concrete placing operation at each pile, as submitted in the placing plan, unless otherwise approved in writing by the Engineer. Concrete shall be placed with concrete pumps and delivery tube system of adequate number and size to complete the placing of concrete in the time specified. The delivery tube system shall consist of one of the following:

A. A tremie tube or tubes, each of which are at least 10 inches in diameter, fed by one or more concrete pumps.
B. One or more concrete pump tubes, each fed by a single concrete pump.

The delivery tube system shall consist of watertight tubes with sufficient rigidity to keep the ends always in the mass of concrete placed. If only one delivery tube is utilized to place the concrete, the tube shall be placed near the center of the drilled hole. Multiple tubes shall be uniformly spaced in the hole. Internal bracing for the steel reinforcing cage shall accommodate the delivery tube system. Tremies shall not be used for piles without space for a 10-inch tube.

Spillage of concrete into the slurry during concrete placing operations shall not be allowed. Delivery tubes shall be capped with a watertight cap, or plugged above the slurry level with a good quality, tight fitting, moving plug that will expel the slurry from the tube as the tube is charged with concrete. The cap or plug shall be designed to be released as the tube is charged. The pump discharge or tremie tube shall extend to the bottom of the hole before charging the tube with concrete. After charging the delivery tube system with concrete, the flow of concrete through a tube shall be induced by slightly raising the discharge end. During concrete placement, the tip of the delivery tube

shall be maintained as follows to prevent reentry of the slurry into the tube. Until at least 10 feet of concrete has been placed, the tip of the delivery tube shall be within 6 inches of the bottom of the drilled hole, and then the embedment of the tip shall be maintained at least 10 feet below the top surface of the concrete. Rapid raising or lowering of the delivery tube shall not be permitted. If the seal is lost or the delivery tube becomes plugged and must be removed, the tube shall be withdrawn, the tube cleaned, the tip of the tube capped to prevent entrance of the slurry, and the operation restarted by pushing the capped tube 10 feet into the concrete and then reinitiating the flow of concrete.

When slurry is used, a fully operational standby concrete pump, adequate to complete the work in the time specified, shall be provided at the site during concrete placement. The slurry level shall be maintained 10 feet above the piezometric head or within 12 inches of the top of the drilled hole, whichever is higher.

A log of concrete placement for each drilled hole shall be maintained by the Contractor when concrete is deposited under slurry. The log shall show the pile location, tip elevation, dates of excavation and concrete placement, total quantity of concrete deposited, length and tip elevation of any casing, and details of any hole stabilization method and materials used. The log shall include a 8-1/2" x 11" sized graph of the concrete placed versus depth of hole filled. The graph shall be plotted continuously throughout placing of concrete. The depth of drilled hole filled shall be plotted vertically with the pile tip oriented at the bottom and the quantity of concrete shall be plotted horizontally. Readings shall be made at least at each 5 feet of pile depth, and the time of the reading shall be indicated. The graph shall be labeled with the pile location, tip elevation, cutoff elevation, and the dates of excavation and concrete placement. The log shall be delivered to the Engineer within 1 working day of completion of placing concrete in the pile.

After placing reinforcement and before placing concrete in the drilled hole, if drill cuttings settle out of the slurry, the bottom of the drilled hole shall be cleaned. The Contractor shall verify that the bottom of the drilled hole is clean.

If a temporary casing is used, concrete placed under slurry shall be maintained at a level at least 5 feet above the bottom of the casing. The withdrawal of the casing shall not cause contamination of the concrete with slurry. If slurry is not used, the temporary casing shall not be withdrawn until the concrete head in the casing is greater than the groundwater outside of the casing. This positive concrete head shall be maintained during the withdrawal of the casing.

Material resulting from using slurry shall be disposed of in conformance with the provisions in Section 7-1.13, "Disposal of Material Outside the Highway Right of Way," of the Standard Specifications.

Acceptance Testing and Mitigation

Vertical inspection pipes for acceptance testing shall be provided in all CIDH concrete piling 24 inches in diameter or larger, except when the holes are dry or when the holes are dewatered without the use of temporary casing in a manner that controls ground water.

The furnishing and placing of inspection pipes shall conform to the following:

A. Inspection pipes shall be Schedule 40 PVC pipe with a nominal inside diameter of 2 inches. Watertight PVC couplers are permitted to facilitate pipe lengths in excess of those which are commercially available. The Contractor shall log the location of the inspection pipe couplers with respect to the plane of pile cut off, and these logs shall be

delivered to the Engineer upon completion of the placement of concrete in the drilled hole.

B. Each inspection pipe shall be capped at the bottom and shall extend from 3 feet above the pile cutoff down to the bottom of the reinforcing cage. A temporary top cap or similar means shall be provided to keep the pipes clean before testing. If pile cutoff is below the ground surface or working platform, inspection pipes shall be extended to 3 feet above the ground surface or working platform. Approved covers or railings shall be provided and inspection pipes shall be located as necessary to minimize exposure of testing personnel to potential falling hazards.
C. Inspection pipes shall be completely clean, dry, and unobstructed at the time of testing providing a 2-inch diameter clear opening.
D. The inspection pipes shall be installed in straight alignment, parallel to the main reinforcement, and securely fastened in place to prevent misalignment during installation of the reinforcement and placing of concrete in the hole. The CIDH concrete piling shall be constructed so that the relative distance of inspection pipes to vertical steel reinforcement shall remain constant.
E. When any changes are made to the tip of CIDH concrete piling, the Contractor shall also extend the inspection pipes to the bottom of the reinforcing cage.

The following additional requirements apply if inspection pipes are not shown on the plans:

A. Inspection pipes shall be placed radially around the pile, inside the outermost spiral or hoop reinforcement and no more than 1 inch clear of the outermost spiral or hoop reinforcement.
B. Inspection pipes shall be placed around the pile at a uniform spacing not exceeding 33 inches measured along the circle passing through the centers of inspection pipes. A minimum of 2 inspection pipes per pile shall be used. Inspection pipes shall be placed to provide the maximum diameter circle that passes through the centers of the inspection pipes while maintaining the spacing required herein.
C. Inspection pipes shall be placed a minimum of 3 inches clear of the vertical reinforcement. When the vertical reinforcement configuration does not permit this clearance while achieving radial location requirements, distance to vertical rebar shall be maximized while still maintaining the requirement for radial location.
D. Where the dimensions of the pile reinforcement do not permit inspection pipes to be placed per these requirements, a plan for tube placement shall be submitted to the Engineer for approval in the Pile Placement Plan with a request for deviation before fabricating pile reinforcement.

After placing concrete and before requesting acceptance tests, each inspection pipe shall be tested by the Contractor in the presence of the Engineer by passing a 1-1/4-inch-diameter rigid cylinder 4.5 feet long through the length of pipe. If an inspection pipe fails to pass the 1-1/4-inch-diameter cylinder, the Contractor shall immediately fill all inspection pipes in the pile with water.

For each inspection pipe that does not pass the 1-1/4-inch-diameter cylinder, the Contractor shall core a nominal 2-inch diameter hole through the concrete for the entire length of the pile. Cored holes shall be located as close as possible to the inspection pipes they are replacing and shall be no more than 5 inches clear from the reinforcement.

Coring shall not damage the pile reinforcement. Cored holes shall be made with a double wall core barrel system utilizing a split tube type inner barrel. Coring with a solid type inner barrel will not be allowed. Coring methods and equipment shall provide intact cores for the entire length of the pile. The coring operation shall be logged by an Engineering Geologist or Civil Engineer licensed in the State of California and experienced in core logging. Coring logs shall be in conformance with the Department's "Soil and Rock Logging, Classification, and Presentation Manual." Coring logs shall include Core Recovery (REC), Rock Quality Designation (RQD), locations of breaks, and complete descriptions of inclusions and voids encountered during coring, and shall be delivered to the Engineer upon completion. Concrete cores shall be preserved, identified with the exact location the core was recovered from within the pile, and delivered to the Engineer upon completion. The Engineer will evaluate the portion of the pile represented by the cored hole based on the submitted core logs.

Acceptance tests of the concrete will be made by the Engineer, without cost to the Contractor. Acceptance tests will evaluate the homogeneity of the placed concrete. Tests will include gamma-gamma logging conducted in conformance with California Test 233. The Contractor shall not conduct operations within 25 feet of the gamma-gamma logging operations. The Contractor shall separate reinforcing steel as necessary to allow the Engineer access to the inspection pipes to perform gamma-gamma logging or other acceptance testing. After requesting acceptance tests and providing access to the piles, the Contractor shall allow 20 days for the Engineer to conduct these tests and make determination of acceptance. Should the Engineer fail to complete these tests within the time allowance, and if in the opinion of the Engineer, the Contractor's controlling operation is delayed or interfered with by reason of the delay in inspection, the delay will be considered a right of way delay as specified in Section 8-1.09, "Right of Way Delays," of the Standard Specifications.

The Engineer may elect to perform additional tests to further evaluate a pile. These tests may include crosshole sonic logging and other means of inspection selected by the Engineer. When the Engineer elects to perform additional tests to further evaluate anomalies for a rejected pile, no time requirement exists for performing these tests. The Contractor may progress with the mitigation plan process without waiting for these supplemental results.

Inspection pipes and cored holes shall be dewatered and filled with grout after notification by the Engineer that the pile is acceptable. Grout shall conform to the provisions in Section 50-1.09, "Bonding and Grouting," of the Standard Specifications. Inspection pipes and holes shall be filled using grout tubes that extend to the bottom of the pipe or hole or into the grout already placed.

If acceptance testing performed by the Engineer determines that a pile does not meet the requirements of the specifications and California Test 233, Part 5C, then that pile will be rejected and all depositing of concrete under slurry or concrete placed using temporary casing for the purpose of controlling groundwater shall be suspended until written changes to the methods of pile construction are approved in writing by the Engineer.

The Engineer will determine whether the rejected pile requires mitigation due to structural, geotechnical, or corrosion concerns. The Engineer will consider the estimated size and location of the anomaly and potential effects upon the design. The Engineer will provide the conclusions of this analysis to the Contractor for development of a mitigation plan, if required. The Contractor shall allow 35 days for the Engineer to determine whether the pile requires mitigation and provide information to the Contractor. Day 1 of the 35 days shall be the 1st day after access has been provided to the Engineer to perform acceptance testing. If additional information is submitted to the Engineer that modifies the size, shape, or nature of the anomaly, the Contractor shall allow 15 additional days for the subsequent analysis.

If the Engineer determines that a rejected pile does not require mitigation, the Contractor may elect to (1) repair the pile per the approved mitigation plan or (2) not repair anomalies found during acceptance testing of that pile. For such unrepaired piles, the Contractor shall pay to the State, $300 per cubic yard for the portion of the pile affected by the anomalies. The volume, in cubic yards, of the portion of the pile affected by the anomalies, shall be calculated as the area of the cross section of the pile affected by each anomaly, in square yards, as determined by the Engineer, multiplied by the distance, in yards, from the top of each anomaly to the specified tip of the pile. If the volume calculated for one anomaly overlaps the volume calculated for additional anomalies within the pile, the calculated volume for the overlap shall only be counted once. In no case shall the amount of the payment to the State for any such pile be less than $300. The Department may deduct the amount from any moneys due, or that may become due the Contractor under the contract.

If the Engineer determines that a rejected pile requires mitigation, the Contractor shall submit to the Engineer for approval a mitigation plan for repair, supplementation, or replacement for each rejected CIDH concrete pile conforming to the provisions in Section 5-1.02, "Plans and Working Drawings," of the Standard Specifications. If the Engineer determines that it is not feasible to repair the rejected pile, the Contractor shall not include repair as a means of mitigation and shall proceed with the submittal of a mitigation plan for replacement or supplementation of the rejected pile.

Pile mitigation plans shall include the following:

A. The designation and location of the pile addressed by the mitigation plan.
B. A review of the structural, geotechnical, and corrosion design requirements of the rejected pile.
C. A step by step description of the mitigation work to be performed, including drawings if necessary.
D. An assessment of how the proposed mitigation work will address the structural, geotechnical, and corrosion design requirements of the rejected pile.
E. Methods for preservation or restoration of existing earthen materials.
F. A list of affected facilities, if any, with methods and equipment for protection of these facilities during mitigation.
G. The State assigned contract number, bridge number, full name of the structure as shown on the contract plans, District-County-Route-Post Mile, and the Contractor's (and Subcontractor's if applicable) name on each sheet.
H. A list of materials, with quantity estimates, and personnel, with qualifications, to be used to perform the mitigation work.
I. The seal and signature of an engineer who is licensed as a Civil Engineer by the State of California. This requirement is waived for approved mitigation plans when either of the following conditions are present:

    a. The proposed mitigation will be performed in conformance with the most recent Department approved version of "ADSC Standard Mitigation Plan 'A' - Basic Repair" without exception or modification.
    b. The Engineer has determined that the rejected pile does not require mitigation due to structural, geotechnical, or corrosion concerns, and the Contractor elects to repair the pile using most recent Department approved version of "ADSC Standard Mitigation Plan 'B' - Grouting Repair" without exception or modification.

The most recent Department approved version of the "ADSC Standard Mitigation Plan" is available at:

http://www.dot.ca.gov/hq/esc/geotech/ft/adscmitplan.htm

For rejected piles to be repaired, the Contractor shall submit a pile mitigation plan that contains the following additional information:

A. An assessment of the nature and size of the anomalies in the rejected pile.
B. Provisions for access for additional pile testing if required by the Engineer.

For rejected piles to be replaced or supplemented, the Contractor shall submit a pile mitigation plan that contains the following additional information:

A. The proposed location and size of additional piles.
B. Structural details and calculations for any modification to the structure to accommodate the replacement or supplemental piles.

All provisions for CIDH concrete piling shall apply to replacement piles.

The Contractor shall allow the Engineer 20 days to review the mitigation plan after a complete submittal has been received.

Should the Engineer fail to review the complete pile mitigation submittal within the time specified, and if, in the opinion of the Engineer, the Contractor's controlling operation is delayed or interfered with by reason of the delay in reviewing the pile mitigation plan, an extension of time commensurate with the delay in completion of the work thus caused will be granted in conformance with the provisions in Section 8-1.09, "Right of Way Delays," of the Standard Specifications.

When repairs are performed, the Contractor shall submit a mitigation report to the Engineer within 10 days of completion of the repair. This report shall state exactly what repair work was performed and quantify the success of the repairs relative to the submitted mitigation plan. The mitigation report shall be stamped and signed by an engineer that is licensed as a Civil Engineer by the State of California. The mitigation report shall show the State assigned contract number, bridge number, full name of the structure as shown on the contract plans, District-County-Route-Post Mile, and the Contractor (and subcontractor if applicable) name on each sheet. The Engineer will be the sole judge as to whether a mitigation proposal is acceptable, the mitigation efforts are successful, and to whether additional repairs, removal and replacement, or construction of a supplemental foundation is required.

MEASUREMENT AND PAYMENT (PILING)

Measurement and payment for the various types and classes of piles shall conform to the provisions in Sections 49-6.01, "Measurement," and 49-6.02, "Payment," of the Standard Specifications and these special provisions.

Payment for cast-in-place concrete piling shall conform to the provisions in Section 49-6.02, "Payment," of the Standard Specifications and these special provisions except that when the diameter of cast-in-place concrete piling is shown on the plans as 24 inches or larger, reinforcement in the piling will be paid for by the pound as bar reinforcing steel (bridge).

Full compensation for slurry, depositing concrete under slurry, test batches, inspection pipes, filling inspection holes and pipes with grout, drilling oversized cast-in-drilled-hole concrete piling, filling cave-ins and oversized piles with concrete, and redrilling through concrete shall be considered as included in the contract prices paid per linear foot for cast-in-drilled-hole concrete piling of the types and sizes listed in the Engineer's Estimate, and no additional compensation will be allowed therefor.

Full compensation for furnishing and installing permanent steel casing due to the Contractor's choice to utilize the optional construction joint shown on the plans shall be considered as included in the contract prices paid per linear foot for cast-in-drilled-hole concrete piling of the types and sizes listed in the Engineer's Estimate, and no separate payment will be made therefor.

13-1.23 PRESTRESSING CONCRETE

Prestressing concrete shall conform to the provisions in Section 50, "Prestressing Concrete," of the Standard Specifications and these special provisions.

The number of working drawings to be submitted for initial review shall be 8 sets for railroad bridges and 6 sets for other structures.

13-1.24 CONCRETE STRUCTURES

Portland cement concrete structures shall conform to the provisions in Section 51, "Concrete Structures," of the Standard Specifications and these special provisions. . Section 51-1.18 of the Standard Specifications shall also apply for uniform texture and appearance.

Attention is directed to "Precast Concrete Quality Control" of these special provisions.

Shotcrete shall not be used as an alternative construction method for reinforced concrete members unless otherwise specified.

When a roughened concrete surface is shown on the plans, the existing concrete surface shall be roughened to a full amplitude of approximately 1/4 inch by abrasive blasting, water blasting, or mechanical equipment.

Forms used to support the deck of cast-in-place box girders may remain in place.

Plastic pipe located at vertical drains used behind retaining walls, including horizontal or sloping drains down slopes and across sidewalk areas, shall be polyvinyl chloride (PVC) plastic pipe, Schedule 80, conforming to the provisions for pipe for edge drains and edge drain outlets in Section 68-3.02, "Materials," of the Standard Specifications. The vertical drain pipe shall be rigidly supported in place during backfilling operations.

FALSEWORK

Falsework shall conform to the provisions in Section 51, "Concrete Structures," of the Standard Specifications and these special provisions.

The Contractor's engineer who signs the falsework drawings shall also certify in writing that the falsework is constructed in conformance with the approved drawings and the contract specifications prior to placing concrete. This certification shall include performing any testing necessary to verify the ability of the falsework members to sustain the stresses required by the falsework design. The engineer who signs the drawings may designate a representative to perform this certification. Where falsework contains openings for railroads, vehicular traffic, or pedestrians, the designated representative shall be qualified to perform this work, shall have at least 3 years of combined experience in falsework design or supervising falsework construction, and shall be registered as a Civil Engineer in the State of California. For other falsework, the designated representative shall be qualified to perform this work and shall have at least 3 years of combined experience in falsework design or supervising falsework construction. The Contractor shall certify the experience of the designated representative in writing and provide supporting documentation demonstrating the required experience if requested by the Engineer.

Welding and Nondestructive Testing

Welding of steel members, except for previously welded splices and except for when fillet welds are used where load demands are less than or equal to 1,000 pounds per inch for each 1/8 inch of fillet weld, shall conform to AWS D1.1 or other recognized welding standard. The welding standard to be utilized shall be specified by the Contractor on the working drawings. Previously welded splices for falsework members are defined as splices made prior to the member being shipped to the project site.

Splices made by field welding of steel beams at the project site shall undergo nondestructive testing (NDT). At the option of the Contractor, either ultrasonic testing (UT) or radiographic testing (RT) shall be used as the method of NDT for each field weld and any repair made to a previously welded splice in a steel beam. Testing shall be performed at locations selected by the Contractor. The length of a splice weld where NDT is to be performed, shall be a cumulative weld length equal to 25 percent of the original splice weld length. The cover pass shall be ground smooth at the locations to be tested. The acceptance criteria shall conform to the requirements of AWS D1.1, Section 6, for cyclically loaded nontubular connections subject to tensile stress. If repairs are required in a portion of the weld, additional NDT shall be performed on the repaired sections. The NDT method chosen shall be used for an entire splice evaluation including any required repairs.

For all field welded splices, the Contractor shall furnish to the Engineer a letter of certification which certifies that all welding and NDT, including visual inspection, are in conformance with the specifications and the welding standard shown on the approved working drawings. This letter of certification shall be signed by an engineer who is registered as a Civil Engineer in the State of California and shall be provided prior to placing any concrete for which the falsework is being erected to support.

For previously welded splices, the Contractor shall determine and perform all necessary testing and inspection required to certify the ability of the falsework members to sustain the stresses required by the falsework design. This welding certification shall (1) itemize the testing and inspection methods used, (2) include the tracking and identifying documents for previously welded members, (3) be signed by an engineer who is registered as a Civil Engineer in the State of California, (4) and shall be provided prior to erecting the members.

SLIDING BEARINGS

Sliding bearings consisting of elastomeric bearing pads lubricated with grease and covered with sheet metal shall conform to the following requirements:

A. Grease shall conform to the requirements of Society of Automotive Engineers AS 8660. A uniform film of grease shall be applied to the upper surface of the pads prior to placing the sheet metal.
B. Sheet metal shall be commercial quality galvanized sheet steel. The sheet metal shall be smooth and free of kinks, bends, or burrs.
C. Construction methods and procedures shall prevent grout or concrete seepage into the sliding bearing assembly.

ELASTOMERIC BEARING PADS

Elastomeric bearing pads shall conform to the provisions in Section 51-1.12H, "Elastomeric Bearing Pads," of the Standard Specifications.

CURING

The formed surfaces which will be exposed in the completed work, of the columns, caps, piers, bents, or abutments listed in the following table shall be cured by the forms-in-place method. Other surfaces of said units shall be cured in conformance with the provisions in Section 90-7.03, "Curing Structures," of the Standard Specifications.

Bridge Name & Number	Abutment Number	Pier or Bent Number
Ted Williams Parkway POC at Shoal Creek Drive	Abutments 1 and 6	Bents 2, 3, 4 and 5

PRECAST CONCRETE GIRDERS

Precast reinforced concrete girders shall conform to the provisions in Section 51, "Concrete Structures," of the Standard Specifications.

PRECAST PRESTRESSED CONCRETE BRIDGE MEMBERS

Before curing operations, the top surface of each member shall be given a coarse texture by brooming with a stiff bristled broom or by other suitable devices that will result in uniform transverse scoring. That portion of the top surface of box girders that is to be covered by expanded polystyrene shall be given a wood float finish.

The anticipated deflection and method of accommodation of deflection of precast prestressed concrete girders, prior to the time the deck concrete is placed, shall be shown on the working drawings in conformance with the provisions in Section 5-1.02, "Plans and Working Drawings," of the Standard Specifications. The deflection shall include the following:

A. Anticipated upward deflection caused by the prestressing forces.
B. Downward deflection caused by the dead load of the girder.
C. Deflection caused by the creep and shrinkage of the concrete for the time interval between the stressing of the girders and the planned placement of the deck.

The deflection shall be substantiated by calculations that consider the ages of the girder concrete at the time of stressing and the Contractor's planned placement of the deck. Deflection calculations shall be based on the concrete producer's estimate of the modulus of elasticity at the applicable concrete age.

Adjustments to accommodate girder deflections that occur prior to the time the deck concrete is placed may include revisions in bearing seat elevations, but the adjustments shall be limited by the following conditions:

A. The minimum permanent vertical clearance under the structure as shown on the plans shall not be reduced.
B. The profile grade and cross slope of the deck shall not be changed.

Girders with unanticipated girder deflection that do not comply with conditions A and B will be rejected in conformance with the provisions in Section 6-1.04, "Defective Materials," of the Standard Specifications.

Adjustments to accommodate girder deflections will not be considered a change in dimensions. Full compensation for increases in the cost of construction, including increases in the quantity of deck or bearing seat concrete, resulting from adjustments to accommodate girder deflections shall be considered as included in the contract prices paid for the various items of work involved, and no additional compensation will be allowed therefor.

The Contractor shall submit a girder erection plan to the Engineer for approval in conformance with the provisions in Section 5-1.02, "Plans and Working Drawings," of the Standard Specifications. The girder erection plan shall include procedures, details, and sequences for unloading, lifting, erecting, and installing temporary bracing, and shall be signed by an engineer who is registered as a Civil Engineer in the State of California. The Contractor shall allow 20 days for the review of the girder erection plan.

Temporary lateral bracing shall be provided for bulb-tee girders located over Ted Williams Parkway. The bracing shall be installed at a minimum at each end of each girder segment and at midspan. The bracing shall be in place prior to the release of the erection equipment from the girder and shall remain in place until 48 hours after the concrete diaphragms have been placed. The bracing shall be designed to prevent overturning of the girders prior to completion of the work and to resist the following lateral pressures applied at the top of the girder in either direction:

Structure Height, H (feet above ground)	Lateral Pressure (psf)
$0 < H \leq 30$	15
$30 < H \leq 50$	20
$50 < H \leq 100$	25
$H > 100$	30

Joints in concrete bridge decks and joints between concrete structures and concrete approach slabs must be sealed in conformance with the details shown on the plans, the provisions in Section 51, "Concrete Structures," of the Standard Specifications, and these special provisions.

When ordered by the Engineer, a joint seal larger than called for by the Movement Rating shown on the plans must be furnished and installed. Payment to the Contractor for furnishing the larger seal and for saw cutting the increment of additional depth of groove required will be determined as provided in Section 4-1.03, "Changes," of the Standard Specifications.

13-1.25 REINFORCEMENT

Reinforcement shall conform to the provisions in Section 52, "Reinforcement," of the Standard Specifications and these special provisions.

The provisions in "Welding Quality Control" of these special provisions do not apply to resistance butt welding.

The following shall apply to ultimate splices for bar reinforcing cages of columns and cast-in-place piles where the longitudinal bars are spliced vertically at the job site in or above their final positions:

A. Instead of being removed from the completed lot, sample splices may be prepared in the same manner as specified in Section 52-1.08C(2)(a), "Production Test Requirements for Service Splices," of the Standard Specifications for service sample splices. These sample splices shall be tested in conformance with the requirements in Section 52-1.08C(3),

"Ultimate Butt Splice Test Criteria," of the Standard Specifications.

B. Splices may be encased in concrete prior to having the QCM review, approve, and forward each Production Test Report to the Engineer. Should the Contractor exercise this option, it is expressly understood that the Contractor will not be relieved of the Contractor's responsibility for incorporating material in the work that conforms to the requirements of the plans and specifications. Material not conforming to these requirements will be subject to rejection.

13-1.26 ROADSIDE SIGNS

Roadside signs shall be furnished and installed at the locations shown on the plans or where designated by the Engineer and in conformance with the provisions in Section 56-2, "Roadside Signs," of the Standard Specifications and these special provisions.

The Contractor shall furnish roadside sign panels in conformance with the provisions in "Furnish Sign" of these special provisions.

Wood posts shall be pressure treated after fabrication in conformance with the provisions in Section 58, "Preservative Treatment of Lumber, Timber and Piling," of the Standard Specifications and AWPA Use Category System: UC4A, Commodity Specification A or B.

Full compensation for Roadside Signs is included in the contract lump sum price paid for Furnish Sign, and no separate payment will be made therefor.

13-1.27 FURNISH SIGN

Signs shall be fabricated and furnished in accordance with details shown on the plans, the Traffic Sign Specifications, and these special provisions.

Traffic Sign Specifications for California sign codes are available for review at:

http://www.dot.ca.gov/hq/traffops/signtech/signdel/specs.htm

Traffic Sign Specifications for signs referenced with Federal MUTCD sign codes can be found in Standard Highway Signs Book, administered by the Federal Highway Administration, which is available for review at:

http://mutcd.fhwa.dot.gov/ser-shs_millennium.htm

Information on cross-referencing California sign codes with the Federal MUTCD sign codes is available at:

http://www.dot.ca.gov/hq/traffops/signtech/signdel/specs.htm

Temporary or permanent signs shall be free from blemishes that may affect the serviceability and detract from the general sign color and appearance when viewing during daytime and nighttime from a distance of 25 feet. The face of each finished sign shall be uniform, flat, smooth, and free of defects, scratches, wrinkles, gel, hard spots, streaks, extrusion marks, and air bubbles. The front, back, and edges of the sign panels shall be free of router chatter marks, burns, sharp edges, loose rivets, delaminated skins, excessive adhesive over spray and aluminum marks.

QUALITY CONTROL FOR SIGNS

The requirements of "Quality Control for Signs" in this section shall not apply to construction area signs.

No later than 14 days before sign fabrication, the Contractor shall submit a written copy of the quality control plan for signs to the Engineer for review. The Engineer will have 10 days to review the quality control plan. Sign fabrication shall not begin until the Engineer approves the Contractor's

quality control plan in writing. The Contractor shall submit to the Engineer at least 3 copies of the approved quality control plan. The quality control plan shall include, but not be limited to the following requirements:

A. Identification of the party responsible for quality control of signs,
B. Basis of acceptance for incoming raw materials at the fabrication facility,
C. Type, method and frequency of quality control testing at the fabrication facility,
D. List (by manufacturer and product name) of process colors, protective overlay film, retroreflective sheeting and black non-reflective film,
E. Recommended cleaning procedure for each product, and
F. Method of packaging, transport and storage for signs.

No legend shall be installed at the project site. Legend shall include letters, numerals, tildes, bars, arrows, route shields, symbols, logos, borders, artwork, and miscellaneous characters. The style, font, size, and spacing of the legend shall conform to the Standard Alphabets published in the FHWA Standard Highway Signs Book. The legend shall be oriented in the same direction in accordance with the manufacturer's orientation marks found on the retroreflective sheeting.

On multiple panel signs, legend shall be placed across joints without affecting the size, shape, spacing, and appearance of the legend. Background and legend shall be wrapped around interior edges of formed panel signs as shown on plans to prevent delamination.

The following notation shall be placed on the lower right side of the back of each sign where the notation will not be blocked by the sign post or frame:

A. PROPERTY OF STATE OF CALIFORNIA,
B. Name of the sign manufacturer,
C. Month and year of fabrication,
D. Type of retroreflective sheeting, and
E. Manufacturer's identification and lot number of retroreflective sheeting.

The above notation shall be applied directly to the aluminum sign panels in 1/4-inch upper case letters and numerals by die-stamp and applied by similar method to the fiberglass reinforced plastic signs. Painting, screening, or engraving the notation will not be allowed. The notation shall be applied without damaging the finish of the sign.

Signs with a protective overlay film shall be marked with a dot of 3/8 inch in diameter. The dot placed on white border shall be black, while the dot placed on black border shall be white. The dot shall be placed on the lower border of the sign before application of the protective overlay film and shall not be placed over the legend and bolt holes. The application method and exact location of the dot shall be determined by the manufacturer of the signs.

For sign panels that have a minor dimension of 48 inches or less, no splice will be allowed in the retroreflective sheet except for the splice produced during the manufacturing of the retroreflective sheeting. For sign panels that have a minor dimension greater than 48 inches, only one horizontal splice will be allowed in the retroreflective sheeting.

Unless specified by the manufacturer of the retroreflective sheeting, splices in retroreflective sheeting shall overlap by a minimum of one inch. Splices shall not be placed within 2 inches from edges of the panels. Except at the horizontal borders, the splices shall overlap in the direction from top to bottom of the sign to prevent moisture penetration. The retroreflective sheeting at the overlap shall not exhibit a color difference under the incident and reflected light.

Signs exhibiting a significant color difference between daytime and nighttime shall be replaced immediately.

Repairing sign panels will not be allowed except when approved by the Engineer.

The Department will inspect signs at the Contractor's facility and delivery location, and in accordance with Section 6, "Control of Materials," of the Standard Specifications. The Engineer will inspect signs for damage and defects before and after installation.

Regardless of kind, size, type, or whether delivered by the Contractor or by a common carrier, signs shall be protected by thorough wrapping, tarping, or other methods to ensure that signs are not damaged by weather conditions and during transit. Signs shall be dry during transit and shipped on palettes, in crates, or tier racks. Padding and protective materials shall be placed between signs as appropriate. Finished sign panels shall be transported and stored by method that protects the face of signs from damage. The Contractor shall replace wet, damaged, and defective signs.

Signs shall be stored in dry environment at all times. Signs shall not rest directly on the ground or become wet during storage. Signs, whether stored indoor or outdoor, shall be free standing. In areas of high heat and humidity signs shall be stored in enclosed climate-controlled trailers or containers. Signs shall be stored indoor if duration of the storage will exceed 30 days.

Screen processed signs shall be protected, transported and stored as recommended by the manufacturer of the retroreflective sheeting.

When requested, the Contractor shall provide the Engineer test samples of signs and materials used at various stages of production. Sign samples shall be 12" x 12" in size with applied background, letter or numeral, and border strip.

The Contractor shall assume the costs and responsibilities resulting from the use of patented materials, equipment, devices, and processes for the Contractor's work.

SHEET ALUMINUM

Alloy and temper designations for sheet aluminum shall be in accordance with ASTM Designation: B 209.

The Contractor shall furnish the Engineer a Certificate of Compliance in conformance with Section 6-1.07, "Certificates of Compliance," of the Standard Specifications for the sheet aluminum.

Sheet aluminum shall be pretreated in accordance to ASTM Designation: B 449. Surface of the sheet aluminum shall be cleaned, deoxidized, and coated with a light and tightly adherent chromate conversion coating free of powdery residue. The conversion coating shall be Class 2 with a weight between 10 milligrams per square foot and 35 milligrams per square foot, and an average weight of 25 milligrams per square foot. Following the cleaning and coating process, the sheet aluminum shall be protected from exposure to grease, oils, dust, and contaminants.

Sheet aluminum shall be free of buckles, warps, dents, cockles, burrs, and defects resulting from fabrication.

Base plate for standard route marker shall be die cut.

RETROREFLECTIVE SHEETING

The Contractor shall furnish retroreflective sheeting for sign background and legend in conformance with ASTM Designation: D 4956 and "Prequalified and Tested Signing and Delineation Materials" of these special provisions.

Retroreflective sheeting shall be applied to sign panels as recommended by the retroreflective sheeting manufacturer without stretching, tearing, and damage.

Class 1, 3, or 4 adhesive backing shall be used for Type II, III, IV, VII, VIII, and IX retroreflective sheeting. Class 2 adhesive backing may also be used for Type II retroreflective sheeting. The adhesive backing shall be pressure sensitive and fungus resistant.

When the color of the retroreflective sheeting determined from instrumental testing is in dispute, the Engineer's visual test will govern.

PROCESS COLOR AND FILM

The Contractor shall furnish and apply screened process color, non-reflective opaque black film, and protective overlay film of the type, kind, and product that are approved by the manufacturer of the retroreflective sheeting.

Section 6-1.07, "Certificates of Compliance," of the Standard Specifications for the screened process color, non-reflective opaque black film, and protective overlay film.

The surface of the screened process color shall be flat and smooth. When the screened process colors determined from the instrumental testing in accordance to ASTM Designation: D 4956 are in dispute, the Engineer's visual test will govern.

The Contractor shall provide patterns, layouts, and set-ups necessary for the screened process.

The Contractor may use green, red, blue, and brown reverse-screened process colors for background and non-reflective opaque black film or black screened process color for legend. The coefficient of retroreflection for reverse-screened process colors on white retroreflective sheeting shall not be less than 70 percent of the coefficient of retroreflection specified in ASTM Designation: D 4956.

The screened process colors and non-reflective opaque black film shall have the same outdoor weatherability as that of the retroreflective sheeting.

After curing, screened process colors shall withstand removal when tested by applying 3M Company Scotch Brand Cellophane Tape No. 600 or equivalent tape over the color and removing with one quick motion at 90° angle.

SINGLE SHEET ALUMINUM SIGN

Single sheet aluminum signs shall be fabricated and furnished with or without frame. The Contractor shall furnish the sheet aluminum in accordance to "Sheet Aluminum" of these special provisions. Single sheet aluminum signs shall be fabricated from sheet aluminum alloy 6061-T6 or 5052-H38.

Single Sheet aluminum signs shall not have a vertical splice in the sheet aluminum. For signs with depth greater than 48 inches, one horizontal splice will be allowed in the sheet aluminum.

Framing for single sheet aluminum signs shall consist of aluminum channel or rectangular aluminum tubing. The framing shall have a length tolerance of ±1/8 inch. The face sheet shall be affixed to the frame with rivets of 3/16-inch diameter. Rivets shall be placed within the web of channels and shall not be placed less than 1/2 inch from edges of the sign panels. Rivets shall be made of aluminum alloy 5052 and shall be anodized or treated with conversion coating to prevent corrosion. The exposed portion of rivets on the face of signs shall be the same color as the background or legend where the rivets are placed.

Finished signs shall be flat within a tolerance of ±1/32 inch per linear foot when measured across the plane of the sign in all directions. The finished signs shall have an overall tolerance within ±1/8 inch of the detailed dimensions.

Aluminum channels or rectangular aluminum tubings shall be welded together with the inert gas shielded-arc welding process using E4043 aluminum electrode filler wires as shown on the plans. Width of the filler shall be equal to wall thickness of smallest welded channel or tubing.

MEASUREMENT AND PAYMENT

Furnishing signs (except for construction area signs) will be measured per each sign.

The contract price paid for furnish sign shall include full compensation for furnishing all labor, materials, tools, equipment, and incidentals, and for doing all the work involved in fabricating and furnishing the signs, including fastening hardware, as shown on the plans, as specified in the Standard Specifications and these special provisions, and as directed by the Engineer.

Full compensation for furnishing and installing protective overlay on signs shall be considered as included in the contract price for furnish sign and no separate payment will be made therefor.

13-1.28 PREPARE AND STAIN CONCRETE

This work shall consist of preparing and staining concrete surfaces where shown on the plans in conformance with the provisions in Section 59-6, "Painting Concrete," of the Standard Specifications and these special provisions.

Concrete stain shall be reactive or an acid stain.

Concrete stain shall be formulated and applied so that the final color of the stained concrete is chestnut color. A 12”x12” sample has been produced and will be provided to the contractor for purposes of defining the chestnut color. The stain shall be applied at a rate necessary to produce a uniform, variegated color as described by the manufacturer. If more than one coat is required, each coat shall be thoroughly cured before the succeeding coat is applied. Areas not to be stained shall be protected such that they remain completely stain-free.

A test panel at least 4' x 4' shall be completed at a location approved by the Engineer before beginning work on staining concrete. The test panel shall be located in area that attracts sunlight and is easily accessible for the purpose of comparing the Architectural Referee Sample. Attention is directed to the “Architectural Referee Sample” section of these Special Provisions. The test panel shall be completed early enough and shall remain available such that the timelines associated with the “Architectural Referee Sample” section of these special provisions be achieved.

The test panel shall be constructed, finished, and stained with the materials, tools, equipment, personnel, and methods to be used in constructing, finishing, and staining the vertical concrete surfaces of the bridge structure. Additional test panels may be ordered by the Engineer until the specified finish, texture, and color are obtained.

The test panel approved by the Engineer shall be used as the standard of comparison in determining acceptability of prepare and stain concrete surfaces. Attention is directed to the fact that different concrete mixes may be used on the project, yet all stained surfaces shall be compared to the one test panel approved by the Engineer for acceptability. Any adjustments that must be made to the staining process or to the texture of finished concrete surfaces in order to achieve a uniform color amongst all staining surfaces shall be implemented. This includes but is not limited to using multiple coats of stain, adjusting the composition of the stain for sections of the bridge that are composed of different concrete mixes or modifying the texture of finished concrete surfaces as needed and approved by the Engineer.

The Contractor shall submit a copy of the stain manufacturer's recommendations and written application instructions to the Engineer not less than 7 days before applying concrete stain to test panels.

New concrete surfaces to be stained shall be cured in conformance with the provisions in Section 90-7.03, "Curing Structures," of the Standard Specifications and these special provisions.

The Contractor shall seal joints between concrete surfaces to be stained and metal surfaces that are galvanized or painted with a polysulfide or polyurethane sealing compound conforming to the requirements in ASTM Designation: C 920, Type S, Grade NS, Class 25, Use M. The color of the sealant shall match the color of the stain.

Immediately before commencing work, the Contractor shall test concrete surfaces to be stained for acceptance of stain in conformance with the manufacturer's recommendations. Areas that resist accepting stain shall be cleaned as approved by the Engineer.

The Contractor shall apply the concrete stain in conformance with the manufacturer's recommendations and these special provisions. The stain shall be applied uniformly, working to avoid excessive rundown. The stain shall be worked into the concrete surface in circular motions with a nylon-bristled brush. Drips, puddles, or other irregularities shall be worked into the concrete.

After the last coat of stain has dried, the Contractor shall rinse stained surfaces with water and wet scrub surfaces with a stiff bristled nylon brush until the rinse water runs clear.

The Contractor shall protect adjacent surfaces during concrete staining operations.

Prepare and stain concrete will be measured by the square foot.

The contract price paid per square foot for prepare and stain concrete shall include full compensation for furnishing all labor, materials, tools, equipment, and incidentals, and for doing all the work involved in preparing of and applying stain to concrete surfaces, complete in place, including construction of test panels, furnishing and applying multiple coats of stain as necessary to achieve a uniform, variegated color as described by the manufacturer, protecting areas that are not to be stained, adjusting the stain composition or process such that any and all stained surfaces match the approved test panel, modifying the finished concrete surface texture such that all stained surfaces match the approved test panel, as shown on the plans, as specified in the Standard Specifications and these special provisions, and as directed by the Engineer.

13-1.30 BROOKS BOX CATCH BASIN

The Brooks Products Box Catch Basin or owner approved equivalent shall be installed per the manufacturer’s recommendations.

Brooks Box Catch Basin as shown on the plans will be paid for on a per unit basis, which per unit basis shall include full compensation for furnishing all labor, materials, tools, equipment and incidentals, and for doing all the work involved in furnishing and installing Brooks Box Catch Basin.

13-1.31 STRUCTURAL METAL PLATE PIPE, 16” STEEL SLEEVE

This work shall consist of furnishing and installing structural metal plate pipe where shown on the plans in conformance with the provisions in Section 67, "Structural Metal Plate Pipe," of the Standard Specifications and these special provisions.

The Contractor is responsible for designing and implementing sewage bypassing/pumping system suitable for completing the work in dry and sanitary conditions. The sewer bypassing/pumping system methodology shall be reviewed by the Resident Engineer prior to implementation. Work shall be scheduled to avoid peak flow periods when requested by the Resident Engineer. The sewer flow shall be intercepted at an upstream manhole, pumped and conveyed in a closed conduit to a downstream manhole until the new sewer pipe is in place and operational.

The Contractor shall furnish, install and operate pumps, pipes, appliances and equipment of sufficient capacity to handle all flows to prevent sewage from backing up in the pipeline. Wastewater flow shall not be interrupted. Sewage shall be conveyed in closed conduits and disposed of in downstream sanitary sewer facilities. Sewage shall not be allowed to flow in trenches or be covered by backfill.

The pump and bypass lines shall be of adequate capacity to handle the flow. The peak pipeline

flow is estimated to be at 230 gallons per minute. Bypass pumping capacity shall be 120% of peak flow with 100% backup pumping capacity connected to the primary pump. The bypass system shall be attended at all times.

a. By-Pass Pumping: The Contractor shall provide sewage diversion for the pipe bursting/rehabilitation process. The pumps and by-pass lines shall be of adequate capacity and size to handle all flows.

b. During the execution of the Work, the Contractor shall be responsible for continuity of sanitary sewer flows.

c. During sewer bypass pumping operations, the pumps shall be continuously attended and monitored by personnel qualified to operate the pumping equipment. This includes after hour periods when the Contractor may not be conducting pipe bursting/rehabilitation operations. The personnel monitoring the pump shall be equipped with a cellular telephone so that additional personnel can be contacted in case of emergency.

d. The Contractor shall have onsite a fully functional and fueled standby pump(s) that can be placed in service if the primary pumping unit malfunctions.

e. The bypass piping shall be a continuous piece of polyethylene solid wall pipe(s) joined by butt-fusion welding or a system of Victaulic® aluminum pipe(s), couplings, and fittings and shall be suitable for traffic loading if installed in areas allowing traffic over installed pipe. Mechanical joints will not be allowed in the polyethylene bypass piping except at the pump, manifold and discharge connections. The bypass pipe shall be of a pressure class that is compatible with the bypass pump.

If sewage backup occurs and enters buildings, the Contractor shall be responsible for clean-up, repair, property damage cost and claims.

f. The Contractor shall comply with Section 7-8.8.1, Flow Diversion Plan, and comply with the City's policy of "ZERO SPILLS." The Contractor shall observe and comply with all Federal, State, and local laws and ordinances, codes, orders, and regulations which in any manner affect the conduct of the work, specifically as it relates to sewage spills. The Contractor shall be fully responsible for preventing sewage spill(s), containing any sewage spill(s), recovery and legal disposal of any spilled sewage, any fines, penalties, claims and liability arising from negligently causing a sewage spill(s), and any violation of any law, ordinance, code, order, or regulation as a result of the spill(s).

g. The Contractor shall maintain access for all driveways and streets during the bypass piping operation.

All costs associated with the performance of the requirements of this section shall be considered included in the contract price for 16" Steel Sleeve and no additional compensation will be allowed therefor.

13-1.32 MISCELLANEOUS CONCRETE CONSTRUCTION

Minor Concrete (Ramp Paving), Minor Concrete (Curb Ramp – Type A), Minor Concrete (Curb Ramp – Type A-1), Minor Concrete, Sidewalk (4"), Minor Concrete (Curb and Gutter, Type G), Minor Concrete (Brow Ditch), Minor Concrete (Cleanout), and Minor Concrete (Curb Outlet) shall conform to the provisions in Section 73, "Concrete Curbs and Sidewalks," of the Standard Specifications and these special provisions.

Curb ramp detectable warning surface shall consist of raised truncated domes constructed or installed on curb ramps in conformance with the details shown on the plans and these special provisions. At the option of the Contractor, the detectable warning surface shall be prefabricated, cast-in-place, or stamped into the surface of the curb ramp. The color of the detectable warning surface shall be yellow conforming to Federal Standard 595B, Color No. 33538.

Prefabricated detectable warning surface shall be in conformance with the requirements established by the Department of General Services, Division of State Architect and be attached in conformance with the manufacturer's recommendations.

Cast-in-place and stamped detectable warning surfaces shall be painted in conformance with the provisions in Section 59-6, "Painting Concrete," of the Standard Specifications.

The finished surfaces of the detectable warning surface shall be free from blemishes.

Prior to constructing the cast-in-place or stamping the detectable warning surface, the Contractor shall demonstrate the ability to produce a detectable warning surface conforming to the details shown on the plans and these special provisions by constructing a 24" x 24" test panel.

The manufacturer shall provide a written 5-year warranty for prefabricated detectable warning surfaces, guaranteeing replacement when there is defect in the dome shape, color fastness, sound-on-cane acoustic quality, resilience, or attachment. The warranty period shall begin upon acceptance of the contract.

MEASUREMENT AND PAYMENT

Minor concrete (curb ramp – type A) shall be measured per unit. Minor concrete (curb ramp – type A-1) shall be measured per unit.

Minor concrete, (sidewalk - 4”) shall be measured per square foot.

Minor concrete (curb and gutter) shall be measured per linear foot.

Minor concrete (brow ditch) shall be measured per linear foot.

Minor concrete (cleanout) shall be measured per unit.

Minor concrete (curb outlet) shall be measured per unit.

Full compensation for constructing or furnishing and installing curb ramp detectable warning surfaces shall be considered as included in the contract price paid for minor concrete (curb ramp – type A) or minor concrete (curb ramp – type A-1), and no separate payment will be made therefor. The installation of truncated domes shall be included in the per unit cost of each curb ramp.

13-1.33 MISCELLANEOUS IRON AND STEEL

Miscellaneous iron and steel shall conform to the provisions in Section 75, "Miscellaneous Metal," of the Standard Specifications and these special provisions.

13-1.34 TRENCH DRAIN

“Aco” trench drain or owner approved equivalent shall be installed per manufacturer’s recommendations.

The length of trench drain shall be measured in linear feet of trench drain in place, completed, and approved. It shall be measured along the centerline of the drain from end or inside face of structure to the end or inside face of structure, whichever is applicable. All fittings including grates, frames and concrete shall be included in the footage as typical pipe sections being measured.

Trench Drain will be measured by the linear foot.

The contract price paid per linear foot for Trench Drain shall include full compensation for furnishing all labor, materials, tools, equipment, and incidentals, and for doing all the work involved in constructing the trench drains, complete in place, including all excavation and installation of materials including concrete, reinforcing, formwork, grates, frames, pre-manufactured channels, as shown on the plans, and as specified in these specifications and the special provisions, and as directed by the Engineer.

13-1.35 UTILITY COORDINATION

The contractor shall be responsible for the replacement of any disturbed utility lines and sprinkler systems as a part of this Contract.

The public utility, where they are the owner, shall have the sole discretion to perform repairs or relocation work, or permit the Contractor to do such repairs or relocation work at a reasonable price.

An existing utility which is damaged as a result of the Contractor's operations shall also be removed or replaced at the Contractor's expense. The Contractor shall contact and coordinate with the utility owner for the relocation and/or replacement of their facility within the work area.

The lump sum price for Utility Coordination shall include full compensation for relocation, coordination, and all costs associated with completing this contract and no additional compensation will be allowed therefor.

13-1.36 BRIDGE DECK DRAINAGE SYSTEM

Bridge deck drainage systems shall conform to the provisions for miscellaneous bridge metal in Section 75, "Miscellaneous Metal," of the Standard Specifications and these special provisions.

Self-tapping screws used for sleeve connections shall be hex-head stainless steel, installed in holes drilled to fit the self-tapping screws, conforming to the requirements of ASTM Designation: A 276, Type 304.

At the Contractor's option, fiberglass pipes and fittings with the same diameter and minimum bend radius as those shown on the plans may be substituted for welded steel pipe in deck drain systems.

Fiberglass pipe and fittings shall conform to the requirements in ASTM Designation: D 2996, and shall have a minimum short-term rupture strength of 30,000 psi. The adhesive type recommended by the manufacturer shall be used for joining pipe and fittings. Fiberglass pipe not enclosed in a box girder cell or encased in concrete shall be manufactured from ultraviolet-resistant resin pigmented with concrete-gray color, or be coated with a concrete-gray resin-rich exterior coating. Paint shall not be used. Fiberglass pipe treated with ultraviolet protection shall withstand a minimum of 2,500 hours of accelerated weathering when tested in conformance with the requirements in ASTM Designation: G 154. Lamps shall be UV-B (313 nm wavelength). The resting cycle shall be 4 hours of ultraviolet exposure at 140° F, and then 4 hours of condensate exposure at 120° F. After testing, the surface of the pipe shall exhibit no fiber exposure, crazing, or checking, and only a slight chalking or color change.

Support spacing for fiberglass pipe shall be the same as shown on the plans for welded steel pipe.

Pipe supports shall have a width of not less than 1.5 inches.

A Certificate of Compliance for fiberglass pipe and fittings shall be furnished to the Engineer in conformance with the provisions in Section 6-1.07, "Certificates of Compliance," of the Standard Specifications. The Certificate of Compliance shall include all laboratory test results conforming to the provisions specified herein.

For drainage piping NPS 8 or smaller, the Contractor shall have the option of substituting polyvinyl chloride (PVC) plastic pipe and fittings with the same diameter and minimum bend radius as shown on the plans for welded steel pipe, which is:

A. Enclosed in a box girder cell and exposed for a length not greater than 20 feet within the cell, or
B. encased in concrete.

The PVC plastic pipe and fittings shall be Schedule 40 conforming to the requirements of ASTM Designations: D 1785. The maximum support spacing for PVC plastic pipe shall be 6 feet.

Couplings used to connect PVC plastic pipe or fiberglass pipe to steel shall be threaded or flanged. The sleeve connections shown on the plans shall not be used for either PVC plastic pipe or fiberglass pipe.

If PVC plastic pipe or fiberglass pipe is substituted for welded steel pipe, the quantity of drainage piping will be computed on the basis of the dimensions and details shown on the plans, and no change in the quantities to be paid for will be made because of the use of PVC plastic pipe or fiberglass pipe.

Bridge deck drainage systems will be measured and paid for by the pound in the same manner specified for miscellaneous metal (bridge) in Section 75-1.06, "Measurement," and Section 75-1.07, "Payment," of the Standard Specifications.

13-1.37 CHAIN LINK RAILING

Chain link railing shall conform to the provisions in Section 83-l, "Railings," of the Standard Specifications and these special provisions.

The chain link fabric shall be dark brown, 9-gage (0.148-inch diameter), Type IV, Class B, fused bonded vinyl coated fabric, conforming to the requirements in AASHTO Designation: M 181.

The strength of the bond between the coating material and steel of the bonded vinyl coated chain link fabric shall be equal to or greater than the cohesive strength of the polyvinyl chloride (PVC) coating material.

Full compensation for furnishing and placing chain link railing shall be considered as included in the contract prices paid for the various items of metal bridge railing (Type C and Type D respectively) and no additional compensation will be allowed therefore.

13-1.38 METAL BRIDGE RAILING

Metal bridge railing (Types A, B, C and D), shall conform to the provisions in Section 83-1, "Railings,"and Section 59-2, “Painting Structural Steel”, of the Standard Specifications.

The color of the metal bridge railing shall have a RGB number equal to 64.41, 48.49, 41.16 except for the perforated metal.

Paint touch-ups to cover field welds, scratches, and other paint blemishes shall match color exactly.

13-1.39 PERFORATED SHEET METAL

Perforated sheet metal shall conform to the provisions in Section 83-1, "Railings,"and Section 59-2, “Painting Structural Steel”, of the Standard Specifications. Perforated sheet metal shall be 14 gauge, 3/16” round with 3/8” stagger. The color of all perforated metal shall have a RGB number equal to 113.28, 65.17, 47.93. Paint touch-ups to cover field welds, scratches, and other paint blemishes shall match color exactly.

Perforated sheet metal shall be cut to match the profile shown on the plans. Top surface of perforated sheet metal shall be protected by attaching a low profile steel edging member or by grinding cut edges such that they are smooth to the touch.

Full compensation for furnishing and installing perforated sheet metal, including labor and materials associated with protection of the edges, painting including all touch-ups to cover field welds, scratches, and other paint blemishes, shall be considered as included in the contract prices paid for the various items of metal bridge railing (Type B and Type D respectively) to which the perforated sheet metal will be attached and no additional compensation will be allowed therefore.

13-1.40 CABLE RAILING

Cable railing shall conform to the provisions in Section 83-1, "Railings," of the Standard Specifications.

13-1.41 CONCRETE BARRIER

Concrete barriers shall conform to the provisions in Section 83-2, "Barriers," of the Standard Specifications and these special provisions.

Concrete barrier (modified) will be measured and paid for as concrete barrier.

13-1.42 THERMOPLASTIC TRAFFIC STRIPE AND PAVEMENT MARKING

Thermoplastic traffic stripes (traffic lines) and pavement markings shall be applied in conformance with the provisions in Section 84, "Traffic Stripes and Pavement Markings," of the Standard Specifications and these special provisions.

Thermoplastic material shall be free of lead and chromium,

and shall conform to the requirements in State Specification PTH-02ALKYD.

Retroreflectivity of the thermoplastic traffic stripes and pavement markings shall conform to the requirements in ASTM Designation: D 6359-99. White thermoplastic traffic stripes and pavement markings shall have a minimum initial retroreflectivity of 250 mcd m^{-2} lx^{-1}. Yellow thermoplastic traffic stripes and pavement markings shall have a minimum initial retroreflectivity of 150 mcd m^{-2} lx^{-1}.

Where striping joins existing striping, as shown on the plans, the Contractor shall begin and end the transition from the existing striping pattern into or from the new striping pattern a sufficient distance to ensure continuity of the striping pattern.

Thermoplastic traffic stripes shall be applied at the minimum thickness and application rate as specified below. The minimum application rate is based on a solid stripe of 4 inches in width.

Minimum Stripe Thickness (inch)	Minimum Application Rate (lb/ft)
0.079	0.27

Thermoplastic traffic stripes and pavement markings shall be free of runs, bubbles, craters, drag marks, stretch marks, and debris.

conforming to the provisions in "Prequalified and Tested Signing and Delineation Materials" of these special provisions may be placed instead of the thermoplastic traffic stripes and pavement markings specified herein. Permanent tape, if used, shall be installed in conformance with the manufacturer's specifications.

Full compensation for Thermoplastic Traffic Stripe and Pavement Marking is included in the contract lump sum price paid for Traffic Stripes and Pavement Markings, and no separate payment will be made therefor. Full compensation for hauling and stockpiling traffic stripes and markings materials and for doing all the work involved in painting traffic stripes (regardless of the number, widths and patterns of individuals stripes involved in each traffic stripe) and pavement markings including establishing alignment for stripes and layout work, complete in place, as shown on the plans, as directed by the engineer shall be considered as included in the contract price paid for Traffic Stripes and Pavement Markings and no additional compensation will be allowed therefor.

13-1.43 PAINT TRAFFIC STRIPE AND PAVEMENT MARKING

Painted traffic stripes (traffic lines) and pavement markings shall be applied in conformance with the provisions in Section 84, "Traffic Stripes and Pavement Markings," of the Standard Specifications and these special provisions.

Traffic stripe and pavement marking paint shall conform to the requirements in State Specification No. PTWB-01.

The color of the painted traffic stripes and pavement markings shall conform to the requirements in ASTM Designation: D 6628-01.

The paint traffic stripes and pavement markings shall conform to the requirements in ASTM Designation: D 6359-99. White painted traffic stripes and pavement markings shall have a minimum initial retroreflectivity of 250 mcd m^{-2} lx^{-1}. Yellow painted traffic stripes and pavement markings shall have a minimum initial retroreflectivity of 150 mcd m^{-2} lx^{-1}.

At the option of the Contractor, permanent traffic striping and pavement marking tape conforming to the provisions in "Prequalified and Tested Signing and Delineation Materials" of these special provisions may be placed instead of painted traffic stripes and pavement markings. Permanent tape, if used, shall be placed in conformance with the manufacturer's specifications.

Full compensation for Paint Traffic Stripe and Pavement Marking is included in the contract lump sum price paid for Traffic Stripes and Pavement Markings, and no separate payment will be made therefor. Full compensation for furnishing all labor, materials, tools, equipment and incidental, and for doing all the work involved in painting traffic stripes (regardless of the number, widths and patterns of individuals stripes involved in each traffic stripe) and pavement markings including establishing alignment for stripes and layout work, complete in place, as shown on the plans, as directed by the engineer shall be considered as included in the contract price paid for Traffic Stripes and Pavement Markings and no additional compensation will be allowed therefor.

13-1.44 PAVEMENT MARKERS

Pavement markers shall be placed in conformance with the provisions in Section 85, "Pavement Markers," of the Standard Specifications and these special provisions.

Attention is directed to "Traffic Control System For Lane Closure" of these special provisions regarding the use of moving lane closures during placement of pavement markers with bituminous adhesive.

The Contractor shall furnish the Engineer certificates of compliance for the pavement markers in conformance with the provisions in Section 6-1.07, "Certificates of Compliance," of the Standard Specifications.

Retroreflective pavement markers shall be marked as abrasion resistant on the body of the markers.

Full compensation for Pavement Markers is included in the contract lump sum price paid for Traffic Stripes and Pavement Markings, and no separate payment will be made therefor. Full compensation for hauling and stockpiling traffic stripes and markings materials and for doing all the work involved in painting traffic stripes (regardless of the number, widths and patterns of individuals stripes involved in each traffic stripe) and pavement markings including establishing alignment for stripes and layout work, complete in place, as shown on the plans, as directed by the engineer shall be considered as included in the contract price paid for Traffic Stripes and Pavement Markings and no additional compensation will be allowed therefor.

13-1.45 ARCHITECTURAL FINISH (STONE FACADE)

Stone facade architectural finish shall be applied to concrete surfaces with a mortar bond coat either directly to the surface or to a mortar bedding on the surface as shown on the plans and in accordance with the provisions in these special provisions.

MATERIALS

Stone façade for architectural treatment shall be composed of precast masonry veneer units consisting of Portland cement, lightweight aggregates, and mineral oxide pigments. Veneer shall have the following unit properties:

1. Compressive Strength: ASTM C 192 and ASTM C 39, 5 sample average: greater than 1,800 psi.
2. Shear Bond: ASTM C 482: 50 psi.
3. Water Absorption: UBC Standard 15-5: Less than 22 percent.
4. Freeze-Thaw Test: ASTM C 67: Less than 3 percent weight loss and no disintegration.
5. Thermal Resistance: ASTM C 177: 0.473 at 1.387 inches thick

Masonry veneer units shall contain mineral oxide pigments of varying colors to resemble a non-uniform “river rock” pattern. The color palette shall be similar in nature to the existing “river rock” pilasters adjacent to the project site along Shoal Creek Drive and Ted Williams Parkway. The shape of the masonry veneer units shall be round in nature, but not uniform in size or shape. Each unit should be slightly different from the next with sizes varying from 3” to 18” in length and 1.5” to 15” in height. The average thickness of the units shall be 1.5”.

Mortar shall be a proprietary, premixed packaged blend of cement, lime, and sand, without color, that requires only water to prepare for use as brick mortar. Packages of premix shall bear the manufacturer's name, brand, weight, and color identification. The manufacturer's recommended mixing proportions and procedures shall be furnished to the Engineer.

PREPARING SURFACES

Surfaces of concrete against which stone or bedding is to be placed shall be roughened and cleaned, exposing the stone aggregate, and shall be flushed with water and allowed to dry to a surface dry condition immediately prior to laying the stone.

Mortar bedding shall be used where necessary to straighten the concrete substrate. Mortar bedding shall be not less than 19 mm thick.

BOND COAT

A bond coat of mortar shall be floated onto concrete surfaces with sufficient pressure to cover the surface evenly with no bare spots and to fill anchor grooves. Organic adhesive shall not be used for bond coat. The surface area to be covered with bond coat shall be no greater than the area that can be covered with brick while the bond coat is still plastic. Bond coat mortar shall be combed with a notched trowel within 10 minutes before installing brick. Brick shall not be installed on a skinned

over mortar bond coat.

LAYING STONE

The stone shall be back buttered immediately before installing the units and shall be firmly pressed into the freshly notched bond coat. Stone shall be tapped to a true surface and to obtain 100 percent coverage by mortar on the back of each unit

The facing shall be cured by keeping the stone continuously damp for at least 72 hours after laying. Curing materials shall not stain the stone, mortared joints, or surrounding concrete surfaces.

Surfaces of concrete, completed masonry, and other such materials exposed to view shall be protected from spillage, splatters and other deposits of cementitious materials from masonry construction. All such deposits shall be removed without damage to the materials or exposed surfaces. Stains, efflorescence, laitance, splashes or spots on the faces of masonry exposed to view shall be removed. Cleaning agents shall conform to the stone manufacturer's recommendations. Abrasive blast cleaning methods will not be permitted on surfaces of stone

MEASUREMENT AND PAYMENT

Architectural finish (stone façade) will be measured and paid for by the square foot.

The contract price paid per square foot for architectural finish (stone façade) of the types listed in the Engineer's Estimate shall include full compensation for furnishing all labor, materials, tools, equipment, and incidentals, and for doing all the work involved in stone facing, complete in place, including mortar bedding and bond coat, as shown on the plans, as specified in the Standard Specifications and these special provisions, and as directed by the Engineer.

13-1.46 ANTI-GRAFFITI PROTECTIVE COATING

Anti-graffiti protective coating for use on surfaces receiving an architectural finish shall conform to Section 7, “Legal Relations and Responsibilities,” of the Standard Specifications and these special provisions.

Anti-graffiti protective coating shall be a clear, water-based sacrificial coating. It shall be capable of acting as a graffiti barrier, preventing spray paints, crayons and ink from penetrating and staining the underlying surface.

All surfaces to be treated shall be clean and dry prior to applying the protective coating. The protective coating shall be sprayed in accordance with the manufacturer’s instructions. Test the surface for suitability and results before overall application.

Anti-graffiti protective coating shall be applied in a minimum of 3 even coats on all surfaces to be treated. Each coat must be thoroughly dried before applying the next coat.

MEASUREMENT AND PAYMENT

Anti-graffiti protective coating will be measured and paid for by the square foot.

The contract price paid per square foot for anti-graffiti protective coating shall include full compensation for furnishing all labor, materials, tools, equipment, and incidentals and for doing all the work involved in applying the coating, as shown on the plans, as specified in the Standard Specifications and these special provisions, and as directed by the Engineer.

13-1.47 BRONZE PLAQUES

Bronze plaques shall conform to ASTM B505, C86300 Manganese Bronze and shall be fabricated with concrete anchors designed by the manufacturer.

Tolerances for the dimensions of the finished plaques shall be ¼" inch and 1/16" for thickness. Plaques outside these tolerances are subject to rejection.

MEASUREMENT AND PAYMENT

Bronze plaques will be measured and paid for by the unit.

The contract price paid for bronze plaques shall include full compensation for furnishing all labor, materials, tools, equipment, and incidentals and for doing all the work involved in installing the plaques, as shown on the plans, as specified in the Standard Specifications and these special provisions, and as directed by the Engineer.

13-1.48 BRONZE SIGN

This work shall consist of furnishing and installing signs in accordance with the details shown on the plans and these special provisions.

GENERAL

The bridge description plaque shall consist of a cast bronze plate with raised polished bronze lettering and polished bronze double line border. The minimum dimensions of the plaque shall be 18 inches wide and 30 inches deep with the following lettering:

TED WILLIAMS PARKWAY PEDESTRIAN OVERCROSSING
AT SHOAL CREEK DRIVE
COMPLETED
<DATE COMPLETED>
FOR
THE CITY OF SAN DIEGO

Mayor:	Jerry Sanders
Councilmembers:	Carl DeMaio
	David Alvarez
	Marti Emerald
	Lorrie Zapf
	Tony Young
	Todd Gloria
	Kevin Faulconer
	Sherri Lightner
Special Thanks to:	Troy Daum
	Duncan L. Hunter
	Duncan D. Hunter
	Carmel Mountain Ranch RCA
Design Engineer:	Simon Wong Engineering
Contractor:	<Contractor>

All bronze signs shall be located as shown on the plans and shall be fastened in place with vandal resistant hardware. The Contractor shall submit the plaque layout along with a sketch providing dimensions for the final proposed location to the Engineer for review and approval.

PAYMENT

Full compensation for furnishing all bronze signs, complete in place, as shown on the plans shall be considered as included in the contract price paid per cubic foot for structural concrete, bridge and no additional compensation will be allowed therefore.

13-1.49 ARCHITECTURAL REFEREE SAMPLE

This work shall consist of furnishing and installing an architectural referee sample in conformance with details shown on the plans, the provisions in the Standard Specifications, and these special provisions.

The architectural referee sample shall consist of the following:

1. One 2" by 2" x ¼" tubular steel post 4'-0" in length. The post shall be finished with the paint color as specified in section 13-1.38 of these specifications.
2. Two 3'-0" square pieces of 14 gauge perforated sheet metal, 3/32" Round, 3/16" Stagger pattern finished with the paint color as specified in section 13-1.39 of these specifications.
3. One 3'-0" square piece of dark brown chain link fabric, 9-gage (0.148-inch diameter), Type IV, Class B, fused bonded vinyl coated fabric.
4. One 2" by 2" x ¼" tubular steel post 4'-0" in length. The post shall be left unpainted initially and shall be prepared for application of any paint color subject to the owner's choice.
5. Two 3'-0" square pieces of 14 gauge perforated sheet metal, 3/32" Round, 3/16" Stagger pattern. The sheet metal shall be left unpainted initially and shall be prepared for application of any paint color subject to the owner's choice.

The referee sample shall be located adjacent to the approved "Prepare and Stain Concrete" test panel location. Attention is directed to the "Prepare and Stain Concrete" section of these special provisions. Neither the concrete test panel nor the architectural referee sample shall be removed prior to approval by the Engineer. The owner shall be notified 3 weeks prior to providing the architectural referee sample. Once the architectural referee sample has been provided, the owner shall have an additional 3 weeks to review and approve the sample. The architectural referee sample approved by both the owner and Engineer shall be used as the standard of comparison in determining acceptability of the materials used for Metal Bridge Railing (Types A, B, C and D) respectively. Attention is directed to the "Metal Bridge Railing" section of these special provisions.

MEASUREMENT AND PAYMENT

Architectural referee sample will be measured and paid for on a lump sum basis.

The contract lump sum price paid for architectural referee sample shall include full compensation for furnishing all labor, materials, tools, equipment, and incidentals and for doing all the work involved in providing the referee sample, complete in place, including all coordination with the owner or owner's chosen representative, delivery of all materials to the site, providing the paint and painting the unfinished tubular steel post and perforated sheet metal pieces to the color of the owner's choosing, as shown on the plans, as specified in the Standard Specifications and these special provisions, and as directed by the Engineer.

13-1.50 FENCE WALL

DESCRIPTION

This work shall consist of constructing a fence wall of masonry block, ornamental iron railings, and an ornamental iron gate and the removal and installation of a section of a concrete walkway and addition or adjustment of sprinklers to maintain irrigation of the existing property owner's lawn. The fence wall and gate post shall be supported on concrete spread footings as shown on the plans.

FENCE WALL (MASONRY BLOCK)

Fence wall (masonry block), consisting of a reinforced hollow unit masonry block stem, shall be constructed in conformance with the provisions in Section 19, "Earthwork," Section 52, "Reinforcement," and Section 90, "Portland Cement Concrete," of the Standard Specifications and these special provisions.

Fence wall masonry unit stems shall be constructed with joints of mortar. Wall stems shall be constructed with hand laid block. Wall stems shall not be constructed with preassembled panels.

Concrete for fence wall footings shall be minor concrete.

Concrete masonry units shall be hollow, load bearing, lightweight or medium weight class units conforming to the requirements in ASTM Designation: C 90. Standard or open-end units may be used. Open-end units, if used, shall not reduce the spacing of the bar reinforcement as shown on the plans.

The masonry units shall be nominal size and texture and of uniform color. The color shall be gray.

When regular strength concrete masonry units with f'm=1500 psi are shown on the plans, the regular strength masonry units shall have a minimum compressive strength of 1900 psi based on net area.

Expansion joint filler shall conform to the requirements in ASTM Designation: D 1751 or ASTM Designation: D 2000 M2AA 805.

Mortar shall be colored to match the units. Coloring shall be chemically inert, fade resistant mineral oxide or synthetic type.

Cementitious material for wall stems shall conform to the provisions in Section 90-2.01, "Cementitious Materials," of the Standard Specifications.

Hydrated lime shall conform to the requirements in ASTM Designation: C 207, Type S.

Mortar sand shall be commercial quality.

Mortar for laying masonry units shall consist, by volume, of one part cementitious material, zero to 0.5 part hydrated lime, and 2.25 to 3 parts mortar sand. Sufficient water shall be added to make a workable mortar. Each batch of mortar shall be accurately measured and thoroughly mixed. Mortar shall be freshly mixed as required. Mortar shall not be retempered more than one hour after mixing.

Prepackaged mortar materials and mortar containing admixtures may be used when approved in writing by the Engineer, provided the mortar shall not contain more than 0.05 percent soluble chlorides when tested in conformance with California Test 422 or more than 0.25 percent soluble sulfates, as SO_4, when tested in conformance with California Test 417.

Before laying masonry units using prepackaged mortar materials or mortar containing admixtures, the Contractor shall submit to the Engineer the proposed sources of the materials together with test data from an independent testing laboratory for mortar tested in conformance with California Test 551. The test data shall be from specimens having a moist cure, except that the sample shall not be immersed in lime water. The average 28-day compressive strength of the mortar shall be not less than 2500 psi.

Aggregate for grout used to fill masonry units shall consist of fine aggregate and coarse aggregate conforming to the provisions in Section 90-2.02, "Aggregates," of the Standard Specifications. At least 20 percent of the aggregate shall be coarse aggregate. The Contractor shall determine the grading except that 100 percent of the combined grading shall pass the 1/2-inch sieve.

At the option of the Contractor, grout for filling masonry units may be proportioned either by volume or weight. Grout shall contain only enough water to cause the grout to flow and fill the voids without segregation. The maximum amount of free water shall not exceed 0.7 times the weight of the cementitious material for regular strength masonry. The maximum amount of free water shall not exceed 0.6 times the weight of the cementitious material for high strength masonry.

Grout proportioned by volume for regular strength masonry shall consist of at least one part cementitious material and 4.5 parts aggregate. Aggregate volumes shall be based on a loose, air-dry condition.

Grout proportioned by weight for regular strength masonry shall contain not less than 550 pounds of cementitious material per cubic yard.

Reinforced concrete masonry unit wall stems shall be constructed with mortar joints in conformance with the following:

A. Concrete masonry unit construction shall be true and plumb in the lateral direction and shall conform to the grade shown on the plans in the longitudinal direction. Bond beam units or recesses for horizontal reinforcement shall be provided.
B. Mortar joints shall be approximately 3/8 inch wide. Walls and cross webs forming cells to be filled with grout shall be full bedded in mortar to prevent leakage of grout. All head and bed joints shall be solidly filled with mortar for a distance in from the face of the wall or unit not less than the thickness of the longitudinal face shells. Head joints shall be shoved tight.
C. Mortared joints around cells to be filled shall be placed so as to preserve the unobstructed vertical continuity of the grout filling. Any overhanging mortar or other obstruction or debris shall be removed from the inside of such cells.
D. Reinforcement shall be securely held in position at top and bottom with either wire ties or spacing devices and at intervals not exceeding 192 bar diameters before placing any grout. Wire shall be 16 gage or heavier. Wooden, aluminum, or plastic spacing devices shall not be used.
E. Splices in vertical reinforcement shall be made only at the locations shown on the plans.

F. All cells shall be filled solidly with grout. All grout in the cells shall be consolidated at the time of placement by vibrating and reconsolidated after excess moisture has been absorbed but before plasticity is lost. Grout shall not be sliced with a trowel.
G. Walls shall be constructed in 4-foot maximum height lifts. Grouting of each lift shall be completed before beginning masonry unit construction for the next lift. The top course of each lift shall consist of a bond beam.
H. A construction joint shall be constructed at the top of the top course to permit placement of the mortar cap. The mix design for the mortar cap shall be as approved by the Engineer.
I. Construction joints shall be made when the placing of grout, in grout filled cells, is stopped for more than one hour. The construction joint shall be approximately 1/2 inch below the top of the last course filled with grout.
J. Bond beams shall be continuous. The top of unfilled cells under horizontal bond beams shall be covered with metal or plastic lath.
K. When fresh masonry joins masonry that is partially or totally set, the contact surface shall be cleaned, roughened, and lightly wetted.
L. Surfaces of concrete on which the masonry walls are to be constructed shall be roughened and cleaned, exposing the aggregate, and shall be flushed with water and allowed to dry to a surface dry condition immediately before laying the masonry units.
M. Where cutting of masonry units is necessary, all cuts shall be made with a masonry saw to neat and true lines. Masonry units with cracking or chipping of the finished exposed surfaces will not be acceptable.
N. Masonry shall be protected in the same manner specified for concrete structures in Section 90-8, "Protecting Concrete," of the Standard Specifications and these special provisions.
O. During erection, all cells shall be kept dry in inclement weather by covering partially completed walls. The covering shall be waterproof fabric, plastic or paper sheeting, or other approved material. Wooden boards and planks shall not be used as covering materials. The covering shall extend down each side of masonry walls approximately 2 feet.
P. Splashes, stains, or spots on the exposed faces of the wall shall be removed.

PORTLAND CEMENT PLASTERING (STUCCO)

Portland cement plastering shall conform to the requirements in ASTM Designation: C 926. Water for mixing shall be potable and free of substances capable of affecting plaster set or of damaging plaster, lath, or accessories. Bonding compound shall conform to the requirements in ASTM Designation: C 932.

Protect adjacent work from soiling, spattering, moisture deterioration, and other harmful effects caused by plastering. Prepare solid substrates for plaster that are smooth or that do not have the suction capability required to bond with plaster in accordance with ASTM Designation: C 926.

PREPARING AND PAINTING PORTLAND CEMENT PLASTERING (STUCCO) SURFACES

The stucco walls and pilasters as shown on the plans shall be prepared and painted in conformance with the details shown on the plans, the provisions in Section 59, "Painting," Section 59-6, “Painting Concrete,” and Section 91, "Paint," of the Standard Specifications, and these special provisions.

The paint to be applied to concrete surfaces shall conform to the provisions in Section 91-4.05, "Paint; Acrylic Emulsion, Exterior White and Light and Medium Tints," of the Standard Specifications. The color of the paint shall be as specified on the plans. The Contractor shall submit to the Engineer, not less than 7 days before initial application of the coating, samples of paint colors for selection and approval.

ORNAMENTAL IRON RAILINGS AND GATE

Ornamental iron railings and gate shall consist of galvanized steel tubes and shall conform to ASTM Designation: A 500 or ASTM Designation: A 513. Metal components consisting of shapes, shapes, or bars shall conform to ASTM Designation: A 36. Anchors shall be galvanized and shall comply with type specified on the plans. Provide brackets and hardware for attachment of railings and gate.

Hot-dip galvanized steel and iron rails, including hardware, after fabrication. Hop-dip galvanized railings shall conform to ASTM Designation: A 123. Hop-dip galvanized hardware shall conform to ASTM Designation: A 153. For galvanized railings, provide hot-dip galvanized fittings, brackets, fasteners, sleeves, and other ferrous components.

After galvanizing, thoroughly clean railings of grease, dirt, oil, flux, and other foreign matter, and treat with etching cleaner to prepare surface for shop priming. Apply shop primer to prepared surfaces of railings unless otherwise indicated. Comply with requirements in SSPC-PA

1. Shop primer for galvanized steel shall comply be cementitious galvanized metal primer complying with MPI#26, vinyl wash primer complying with MPI#80, or water-based galvanized metal primer complying with MPI#134.
2. Apply epoxy intermediate and polyurethane topcoats to prime-coated surfaces. Comply with coating manufacturer's written instructions and with requirements in SSPC-PA
3. Epoxy intermediate coat shall comply with MPI#77 and be compatible with primer and topcoat. Polyurethane topcoat shall comply with MPI#72 and be compatible with the undercoat.
4. Provide color as specified on the plans.

The Contractor shall submit the following items:

A. Product data for the manufacturer’s product lines of railings assembled from standard components.
B. Shop drawings which include the plans, elevations, details and attachments.
C. Samples of paint for selection by the Engineer.

Fabricate ornamental iron fence and gate as follows:

A. Fabricate railings to comply with requirements indicated for design, dimensions, member sizes and spacing, details, finish, and anchorage.
B. Connections: Fabricate railings with welded connections unless otherwise indicated.
C. Welded Connections: Cope components at connections to provide close fit, or use fittings designed for this purpose. Weld all around at connections, including at fittings. At exposed connections, finish exposed welds to comply with NOMMA's "Voluntary Joint Finish Standards" for Type 1 welds: no evidence of a welded joint.
D. Form changes in direction by bending.
E. Bend members in jigs to produce uniform curvature for each configuration required; maintain cross section of member throughout entire bend without buckling, twisting, cracking, or otherwise deforming exposed surfaces of components.
F. Close exposed ends of hollow railing members with prefabricated end fittings.

G. Brackets, Flanges, Fittings, and Anchors: Provide wall brackets, flanges, miscellaneous fittings, and anchors to interconnect railing members to other work unless otherwise indicated.

Install ornamental iron fence and gate as follows:

A. Perform cutting, drilling, and fitting required for installing railings. Set railings accurately in location, alignment, and elevation; measured from established lines and levels and free of rack. Set posts plumb within a tolerance of 1/16 inch in 3 feet. Align rails so variations from level for horizontal members and variations from parallel with rake of steps and ramps for sloping members do not exceed 1/4 inch in 12 feet.
B. For post to be casted into footing, place post inside rebar cage and at location indicated on the plans before casting concrete.
C. For post to be anchored to masonry, anchor post flush against masonry surface using anchor bolts specified on the plans.
D. Use fixed or adjustable brackets, as needed, to anchor railings ends to masonry using anchor bolts specified on the plans.
E. Touchup Painting: Immediately after erection, clean field welds, bolted connections, and abraded areas of shop paint, and paint exposed areas with the same material as used for shop painting to comply with SSPC-PA 1 for touching up shop-painted surfaces.

MEASUREMENT AND PAYMENT

Fence wall will be measured by the linear foot measured along the wall layout line and shall include the gate length that connects to the existing home.

The contract linear foot price paid for fence wall shall include full compensation for furnishing all labor, materials, tools, equipment, and incidentals and for doing all the work involved in constructing the fence wall, complete in place, including excavation of the trench footings, backfill, concrete, reinforcement, ornamental fence panels, posts, gate, gate latch, anchorages, joint filler materials, stucco, paint, demolition of existing concrete walkway and replacement of walkway in kind, replacement of all sections of lawn damaged as a result of the wall construction, realignment and replacement of irrigation lateral line as necessary to accommodate the fence wall, addition of a lateral line and sprinklers in front of the wall as necessary to provide full coverage irrigation of the newly segregated portion of lawn, adjustment of sprinkler system to provide full irrigation coverage of the lawn while eliminating spray on the wall, as shown on the plans, as specified in the Standard Specifications and these special provisions, and as directed by the Engineer.

13-1.51 FURNISHING EQUIPMENT

The Contractor shall furnish the Resident Engineer an allowance of up to $4,900 for the purpose of purchasing a laptop computer, digital camera and accessories such as printers, scanners, and software for project record keeping purposes.

Upon completion and acceptance of the project, the furnished equipment shall become the property of the City of San Diego.

Full compensation for complying with the requirements of this section shall be considered as included in the contract lump sum paid for Mobilization and no additional payment will be allowed therefore."

SECTION 14. FEDERAL REQUIREMENTS FOR FEDERAL-AID CONSTRUCTION PROJECTS:

GENERAL.—The work herein proposed will be financed in whole or in part with Federal funds, and therefore all of the statutes, rules and regulations promulgated by the Federal Government and applicable to work financed in whole or in part with Federal funds will apply to such work. The "Required Contract Provisions, Federal-Aid Construction Contracts, "Form FHWA 1273, are included in this Section 14. Whenever in said required contract provisions references are made to "SHA contracting officer," "SHA resident engineer," or "authorized representative of the SHA," such references shall be construed to mean "Engineer" as defined in Section 1-1.18 of the Standard Specifications.

PERFORMANCE OF PREVIOUS CONTRACT.— In addition to the provisions in Section II, "Nondiscrimination," and Section VII, "Subletting or Assigning the Contract," of the required contract provisions, the Contractor shall comply with the following:

The bidder shall execute the CERTIFICATION WITH REGARD TO THE PERFORMANCE OF PREVIOUS CONTRACTS OR SUBCONTRACTS SUBJECT TO THE EQUAL OPPORTUNITY CLAUSE AND THE FILING OF REQUIRED REPORTS located in the proposal. No request for subletting or assigning any portion of the contract in excess of $10,000 will be considered under the provisions of Section VII of the required contract provisions unless such request is accompanied by the CERTIFICATION referred to above, executed by the proposed subcontractor.

NON-COLLUSION PROVISION. — The provisions in this section are applicable to all contracts except contracts for Federal Aid Secondary projects.

Title 23, United States Code, Section 112, requires as a condition precedent to approval by the Federal Highway Administrator of the contract for this work that each bidder file a sworn statement executed by, or on behalf of, the person, firm, association, or corporation to whom such contract is to be awarded, certifying that such person, firm, association, or corporation has not, either directly or indirectly, entered into any agreement, participated in any collusion, or otherwise taken any action in restraint of free competitive bidding in connection with the submitted bid. A form to make the non-collusion affidavit statement required by Section 112 as a certification under penalty of perjury rather than as a sworn statement as permitted by 28, USC, Sec. 1746, is included in the proposal.

PARTICIPATION BY DISADVANTAGED BUSINESS ENTERPRISES IN SUBCONTRACTING.—Part 26, Title 49, Code of Federal Regulations applies to this Federal-aid project. Pertinent sections of said Code are incorporated in part or in its entirety within other sections of these special provisions.

Schedule B—Information for Determining Joint Venture Eligibility

(This form need not be filled in if all joint venture firms are DBE owned.)

1. Name of joint venture _____

_____

2. Address of joint venture _____

_____

3. Phone number of joint venture _____

_____

4. Identify the firms which comprise the joint venture. (The DBE partner must complete Schedule A.) _____

_____

a. Describe the role of the DBE firm in the joint venture.

_____

b. Describe very briefly the experience and business qualifications of each non-DBE joint venturer: _____

_____

5. Nature of the joint venture's business _____

_____

6. Provide a copy of the joint venture agreement.

7. What is the claimed percentage of DBE ownership? ___

_____

8. Ownership of joint venture: (This need not be filled in if described in the joint venture agreement, provided by question 6.).

Revised 3-95
08-07-95

FR-1

a. Profit and loss sharing.
b. Capital contributions, including equipment.
c. Other applicable ownership interests.

9. Control of and participation in this contract. Identify by name, race, sex, and "firm" those individuals (and their titles) who are responsible for day-to-day management and policy decision making, including, but not limited to, those with prime responsibility for:

a. Financial decisions _____

_____

b. Management decisions, such as:

1. Estimating _____

_____

2. Marketing and sales _____

_____

3. Hiring and firing of management personnel ___

_____

4. Purchasing of major items or supplies _____

_____

c. Supervision of field operations _____

_____

Note.—If, after filing this Schedule B and before the completion of the joint venture's work on the contract covered by this regulation, there is any significant change in the information submitted, the joint venture must inform the grantee, either directly or through the prime contractor if the joint venture is a subcontractor.

Affidavit

"The undersigned swear that the foregoing statements are correct and include all material information necessary to identify and explain the terms and operation of our joint venture and the intended participation by each joint venturer in the undertaking. Further, the undersigned covenant and agree to provide to grantee current, complete and accurate information regarding actual joint venture work and the payment therefor and any proposed changes in any of the joint venture arrangements and to permit the audit and examination of the books, records and files of the joint venture, or those of each joint venturer relevant to the joint venture, by authorized representatives of the grantee or the Federal funding agency. Any material misrepresentation will be grounds for terminating any contract which may be awarded and for initiating action under Federal or State laws concerning false statements."

.....	.....
Name of Firm	Name of Firm
.....	.....
Signature	Signature
.....	.....
Name	Name
.....	.....
Title	Title
.....	.....
Date	Date

Date _____

State of _____

County of _____

On this ____ day of _____, 19 __, before me appeared (Name) _____, to me personally known, who, being duly sworn, did execute the foregoing affidavit, and did state that he or she was properly authorized by (Name of firm) _____ to execute the affidavit and did so as his or her free act and deed.

Notary Public _____

Commission expires _____

[Seal]

Date _____

State of _____

County of _____

On this ___ day of _____, 19 __, before me appeared (Name) _____ to me personally known, who, being duly sworn, did execute the foregoing affidavit, and did state that he or she was properly authorized by (Name of firm) _____ to execute the affidavit and did so as his or her free act and deed.

Notary Public _____

Commission expires _____

[Seal]

Revised 3-95
08-07-95

FR-2

REQUIRED CONTRACT PROVISIONS
FEDERAL-AID CONSTRUCTION CONTRACTS AND PROJECTS

(Exclusive of Appalachian Contracts)

		Page
I.	General	3
II.	Nondiscrimination	3
III.	Nonsegregated Facilities	5
IV.	Payment of Predetermined Minimum Wage	6
V.	Statements and Payrolls	8
VI.	Record of Materials, Supplies, and Labor	9
VII.	Subletting or Assigning the Contract	9
VIII.	Safety: Accident Prevention	10
IX.	False Statements Concerning Highway Project	10
X.	Implementation of Clean Air Act and Federal Water Pollution Control Act	10
XI.	Certification Regarding Debarment, Suspension, Ineligibility, and Voluntary Exclusion	11
XII.	Certification Regarding Use of Contract Funds for Lobbying	12

ATTACHMENTS

A. Employment Preference for Appalachian Contracts (included in Appalachian contracts only)

I. GENERAL

1. These contract provisions shall apply to all work performed on the contract by the contractor's own organization and with the assistance of workers under the contractor's immediate superintendence and to all work performed on the contract by piecework, station work, or by subcontract.

2. Except as otherwise provided for in each section, the contractor shall insert in each subcontract all of the stipulations contained in these Required Contract Provisions, and further require their inclusion in any lower tier subcontract or purchase order that may in turn be made. The Required Contract Provisions shall not be incorporated by reference in any case. The prime contractor shall be responsible for compliance by any subcontractor or lower tier subcontractor with these Required Contract Provisions.

3. A breach of any of the stipulations contained in these Required Contract Provisions shall be sufficient grounds for termination of the contract.

4. A breach of the following clauses of the Required Contract Provisions may also be grounds for debarment as provided in 29 CFR 5.12:

Section I, paragraph 2;
Section IV, paragraphs 1, 2, 3, 4, and 7;
Section V, paragraphs 1 and 2a through 2g.

5. Disputes arising out of the labor standards provisions of Section IV (except paragraph 5) and Section V of these Required Contract Provisions shall not be subject to the general disputes clause of this contract. Such disputes shall be resolved in accordance with the procedures of the U.S. Department of Labor (DOL) as set forth in 29 CFR 5, 6, and 7. Disputes within the meaning of this clause include disputes between the contractor (or any of its subcontractors) and the contracting agency, the DOL, or the contractor's employees or their representatives.

6. **Selection of Labor:** During the performance of this contract, the contractor shall not:

a. discriminate against labor from any other State, possession, or territory of the United States (except for employment preference for Appalachian contracts, when applicable, as specified in Attachment A), or

b. employ convict labor for any purpose within the limits of the project unless it is labor performed by convicts who are on parole, supervised release, or probation.

II. NONDISCRIMINATION

(Applicable to all Federal-aid construction contracts and to all related subcontracts of $10,000 or more.)

1. **Equal Employment Opportunity:** Equal employment opportunity (EEO) requirements not to discriminate and to take affirmative action to assure equal opportunity as set forth under laws, executive orders, rules, regulations (28 CFR 35, 29 CFR 1630, and 41 CFR 60) and orders of the Secretary of Labor as modified by the provisions prescribed herein, and imposed pursuant to 23 U.S.C. 140 shall constitute the EEO and specific affirmative action standards for the contractor's project activities under this contract. The Equal Opportunity Construction Contract Specifications set forth under 41 CFR 60-4.3 and the provisions of the American Disabilities Act of 1990 (42 U.S.C. 12101 et seq.) set forth under 28 CFR 35 and 29 CFR 1630 are incorporated by reference in this contract. In the execution of this contract, the contractor agrees to comply with the following minimum specific requirement activities of EEO:

a. The contractor will work with the State highway agency (SHA) and the Federal Government in carrying out EEO obligations and in their review of his/her activities under the contract.

b. The contractor will accept as his operating policy the following statement:

"It is the policy of this Company to assure that applicants are employed, and that employees are treated during employment, without regard to their race, religion, sex, color, national origin, age or disability. Such action shall include: employment, upgrading, demotion, or transfer; recruitment or recruitment advertising; layoff or termination; rates of pay or other forms of compensation; and selection for training, including apprenticeship, preapprenticeship, and/or on-the-job training."

2. **EEO Officer:** The contractor will designate and make known to the SHA contracting officers an EEO Officer who will have the responsibility for and must be capable of effectively

Form 1273 — Revised 3-95
08-07-95

administering and promoting an active contractor program of EEO and who must be assigned adequate authority and responsibility to do so.

3. **Dissemination of Policy:** All members of the contractor's staff who are authorized to hire, supervise, promote, and discharge employees, or who recommend such action, or who are substantially involved in such action, will be made fully cognizant of, and will implement, the contractor's EEO policy and contractual responsibilities to provide EEO in each grade and classification of employment. To ensure that the above agreement will be met, the following actions will be taken as a minimum:

a. Periodic meetings of supervisory and personnel office employees will be conducted before the start of work and then not less often than once every six months, at which time the contractor's EEO policy and its implementation will be reviewed and explained. The meetings will be conducted by the EEO Officer.

b. All new supervisory or personnel office employees will be given a thorough indoctrination by the EEO Officer, covering all major aspects of the contractor's EEO obligations within thirty days following their reporting for duty with the contractor.

c. All personnel who are engaged in direct recruitment for the project will be instructed by the EEO Officer in the contractor's procedures for locating and hiring minority group employees.

d. Notices and posters setting forth the contractor's EEO policy will be placed in areas readily accessible to employees, applicants for employment and potential employees.

e. The contractor's EEO policy and the procedures to implement such policy will be brought to the attention of employees by means of meetings, employee handbooks, or other appropriate means.

4. **Recruitment:** When advertising for employees, the contractor will include in all advertisements for employees the notation: "An Equal Opportunity Employer." All such advertisements will be placed in publications having a large circulation among minority groups in the area from which the project work force would normally be derived.

a. The contractor will, unless precluded by a valid bargaining agreement, conduct systematic and direct recruitment through public and private employee referral sources likely to yield qualified minority group applicants. To meet this requirement, the contractor will identify sources of potential minority group employees, and establish with such identified sources procedures whereby minority group applicants may be referred to the contractor for employment consideration.

b. In the event the contractor has a valid bargaining agreement providing for exclusive hiring hall referrals, he is expected to observe the provisions of that agreement to the extent that the system permits the contractor's compliance with EEO contract provisions. (The DOL has held that where implementation of such agreements have the effect of discriminating against minorities or women, or obligates the contractor to do the same, such implementation violates Executive Order 11246, as amended.)

c. The contractor will encourage his present employees to refer minority group applicants for employment. Information and procedures with regard to referring minority group applicants will be discussed with employees.

5. **Personnel Actions:** Wages, working conditions, and employee benefits shall be established and administered, and personnel actions of every type, including hiring, upgrading, promotion, transfer, demotion, layoff, and termination, shall be taken without regard to race, color, religion, sex, national origin, age or disability. The following procedures shall be followed:

a. The contractor will conduct periodic inspections of project sites to ensure that working conditions and employee facilities do not indicate discriminatory treatment of project site personnel.

b. The contractor will periodically evaluate the spread of wages paid within each classification to determine any evidence of discriminatory wage practices.

c. The contractor will periodically review selected personnel actions in depth to determine whether there is evidence of discrimination. Where evidence is found, the contractor will promptly take corrective action. If the review indicates that the discrimination may extend beyond the actions reviewed, such corrective action shall include all affected persons.

d. The contractor will promptly investigate all complaints of alleged discrimination made to the contractor in connection with his obligations under this contract, will attempt to resolve such complaints, and will take appropriate corrective action within a reasonable time. If the investigation indicates that the discrimination may affect persons other than the complainant, such corrective action shall include such other persons. Upon completion of each investigation, the contractor will inform every complainant of all of his avenues of appeal.

6. Training and Promotion:

a. The contractor will assist in locating, qualifying, and increasing the skills of minority group and women employees, and applicants for employment.

b. Consistent with the contractor's work force requirements and as permissible under Federal and State regulations, the contractor shall make full use of training programs, i.e., apprenticeship, and on-the-job training programs for the geographical area of contract performance. Where feasible, 25 percent of apprentices or trainees in each occupation shall be in their first year of apprenticeship or training. In the event a special provision for training is provided under this contract, this subparagraph will be superseded as indicated in the special provision.

c. The contractor will advise employees and applicants for employment of available training programs and entrance requirements for each.

d. The contractor will periodically review the training and promotion potential of minority group and women employees and will encourage eligible employees to apply for such training and promotion.

Form 1273 — Revised 3-95
08-07-95

FR-4

7. **Unions:** If the contractor relies in whole or in part upon unions as a source of employees, the contractor will use his/her best efforts to obtain the cooperation of such unions to increase opportunities for minority groups and women within the unions, and to effect referrals by such unions of minority and female employees. Actions by the contractor either directly or through a contractor's association acting as agent will include the procedures set forth below:

a. The contractor will use best efforts to develop, in cooperation with the unions, joint training programs aimed toward qualifying more minority group members and women for membership in the unions and increasing the skills of minority group employees and women so that they may qualify for higher paying employment.

b. The contractor will use best efforts to incorporate an EEO clause into each union agreement to the end that such union will be contractually bound to refer applicants without regard to their race, color, religion, sex, national origin, age or disability.

c. The contractor is to obtain information as to the referral practices and policies of the labor union except that to the extent such information is within the exclusive possession of the labor union and such labor union refuses to furnish such information to the contractor, the contractor shall so certify to the SHA and shall set forth what efforts have been made to obtain such information.

d. In the event the union is unable to provide the contractor with a reasonable flow of minority and women referrals within the time limit set forth in the collective bargaining agreement, the contractor will, through independent recruitment efforts, fill the employment vacancies without regard to race, color, religion, sex, national origin, age or disability; making full efforts to obtain qualified and/or qualifiable minority group persons and women. (The DOL has held that it shall be no excuse that the union with which the contractor has a collective bargaining agreement providing for exclusive referral failed to refer minority employees.) In the event the union referral practice prevents the contractor from meeting the obligations pursuant to Executive Order 11246, as amended, and these special provisions, such contractor shall immediately notify the SHA.

8. Selection of Subcontractors, Procurement of Materials and Leasing of Equipment: The contractor shall not discriminate on the grounds of race, color, religion, sex, national origin, age or disability in the selection and retention of subcontractors, including procurement of materials and leases of equipment.

a. The contractor shall notify all potential subcontractors and suppliers of his/her EEO obligations under this contract.

b. Disadvantaged business enterprises (DBE), as defined in 49 CFR 26, shall have equal opportunity to compete for and perform subcontracts which the contractor enters into pursuant to this contract. The contractor will use his best efforts to solicit bids from and to utilize DBE subcontractors or subcontractors with meaningful minority group and female representation among their employees. Contractors shall obtain lists of DBE construction firms from SHA personnel.

c. The contractor will use his best efforts to ensure subcontractor compliance with their EEO obligations.

9. **Records and Reports:** The contractor shall keep such records as necessary to document compliance with the EEO requirements. Such records shall be retained for a period of three years following completion of the contract work and shall be available at reasonable times and places for inspection by authorized representatives of the SHA and the FHWA.

a. The records kept by the contractor shall document the following:

(1) The number of minority and non-minority group members and women employed in each work classification on the project;

(2) The progress and efforts being made in cooperation with unions, when applicable, to increase employment opportunities for minorities and women;

(3) The progress and efforts being made in locating, hiring, training, qualifying, and upgrading minority and female employees; and

(4) The progress and efforts being made in securing the services of DBE subcontractors or subcontractors with meaningful minority and female representation among their employees.

b. The contractors will submit an annual report to the SHA each July for the duration of the project, indicating the number of minority, women, and non-minority group employees currently engaged in each work classification required by the contract work. This information is to be reported on Form FHWA-1391. If on-the-job training is being required by special provision, the contractor will be required to collect and report training data.

III NONSEGREGATED FACILITIES

(Applicable to all Federal-aid construction contracts and to all related subcontracts of $10,000 or more.)

a. By submission of this bid, the execution of this contract or subcontract, or the consummation of this material supply agreement or purchase order, as appropriate, the bidder, Federal-aid construction contractor, subcontractor, material supplier, or vendor, as appropriate, certifies that the firm does not maintain or provide for its employees any segregated facilities at any of its establishments, and that the firm does not permit its employees to perform their services at any location, under its control, where segregated facilities are maintained. The firm agrees that a breach of this certification is a violation of the EEO provisions of this contract. The firm further certifies that no employee will be denied access to adequate facilities on the basis of sex or disability.

b. As used in this certification, the term "segregated facilities" means any waiting rooms, work areas, restrooms and washrooms, restaurants and other eating areas, time clocks, locker rooms, and other storage or dressing areas, parking lots, drinking fountains, recreation or entertainment areas, transportation, and housing facilities provided for employees which are segregated by explicit directive, or are, in fact, segregated on the basis of race, color, religion, national origin, age or disability, because of habit, local custom, or otherwise. The only exception will be for the disabled when the demands for accessibility override (e.g. disabled parking).

c. The contractor agrees that it has obtained or will obtain identical certification from proposed subcontractors or material suppliers prior to award of subcontracts or consummation of material supply agreements of $10,000 or more and that it will retain such certifications in its files.

IV. PAYMENT OF PREDETERMINED MINIMUM WAGE

(Applicable to all Federal-aid construction contracts exceeding $2,000 and to all related subcontracts, except for projects located on roadways classified as local roads or rural minor collectors, which are exempt.)

1. General:

a. All mechanics and laborers employed or working upon the site of the work will be paid unconditionally and not less often than once a week and without subsequent deduction or rebate on any account [except such payroll deductions as are permitted by regulations (29 CFR 3)] issued by the Secretary of Labor under the Copeland Act (40 U.S.C. 276c) the full amounts of wages and bona fide fringe benefits (or cash equivalents thereof) due at time of payment. The payment shall be computed at wage rates not less than those contained in the wage determination of the Secretary of Labor (hereinafter "the wage determination") which is attached hereto and made a part hereof, regardless of any contractual relationship which may be alleged to exist between the contractor or its subcontractors and such laborers and mechanics. The wage determination (including any additional classifications and wage rates conformed under paragraph 2 of this Section IV and the DOL poster (WH-1321) or Form FHWA-1495) shall be posted at all times by the contractor and its subcontractors at the site of the work in a prominent and accessible place where it can be easily seen by the workers. For the purpose of this Section, contributions made or costs reasonably anticipated for bona fide fringe benefits under Section 1(b)(2) of the Davis-Bacon Act (40 U.S.C. 276a) on behalf of laborers or mechanics are considered wages paid to such laborers or mechanics, subject to the provisions of Section IV, paragraph 3b, hereof. Also, for the purpose of this Section, regular contributions made or costs incurred for more than a weekly period (but not less often than quarterly) under plans, funds, or programs, which cover the particular weekly period, are deemed to be constructively made or incurred during such weekly period. Such laborers and mechanics shall be paid the appropriate wage rate and fringe benefits on the wage determination for the classification of work actually performed, without regard to skill, except as provided in paragraphs 4 and 5 of this Section IV.

b. Laborers or mechanics performing work in more than one classification may be compensated at the rate specified for each classification for the time actually worked therein, provided, that the employer's payroll records accurately set forth the time spent in each classification in which work is performed.

c. All rulings and interpretations of the Davis-Bacon Act and related acts contained in 29 CFR 1, 3, and 5 are herein incorporated by reference in this contract.

2. Classification:

a. The SHA contracting officer shall require that any class of laborers or mechanics employed under the contract, which is not listed in the wage determination, shall be classified in conformance with the wage determination.

b. The contracting officer shall approve an additional classification, wage rate and fringe benefits only when the following criteria have been met:

(1) the work to be performed by the additional classification requested is not performed by a classification in the wage determination;

(2) the additional classification is utilized in the area by the construction industry;

(3) the proposed wage rate, including any bona fide fringe benefits, bears a reasonable relationship to the wage rates contained in the wage determination; and

(4) with respect to helpers, when such a classification prevails in the area in which the work is performed.

c. If the contractor or subcontractors, as appropriate, the laborers and mechanics (if known) to be employed in the additional classification or their representatives, and the contracting officer agree on the classification and wage rate (including the amount designated for fringe benefits where appropriate), a report of the action taken shall be sent by the contracting officer to the DOL, Administrator of the Wage and Hour Division, Employment Standards Administration, Washington, D.C. 20210. The Wage and Hour Administrator, or an authorized representative, will approve, modify, or disapprove every additional classification action within 30 days of receipt and so advise the contracting officer or will notify the contracting officer within the 30-day period that additional time is necessary.

d. In the event the contractor or subcontractors, as appropriate, the laborers or mechanics to be employed in the additional classification or their representatives, and the contracting officer do not agree on the proposed classification and wage rate (including the amount designated for fringe benefits, where appropriate), the contracting officer shall refer the questions, including the views of all interested parties and the recommendation of the contracting officer, to the Wage and Hour Administrator for determination. Said Administrator, or an authorized representative, will issue a determination within 30 days of receipt and so advise the contracting officer or will notify the contracting officer within the 30-day period that additional time is necessary

e. The wage rate (including fringe benefits where appropriate) determined pursuant to paragraph 2c or 2d of this Section IV shall be paid to all workers performing work in the additional classification from the first day on which work is performed in the classification.

3. Payment of Fringe Benefits:

a. Whenever the minimum wage rate prescribed in the contract for a class of laborers or mechanics includes a fringe benefit which is not expressed as an hourly rate, the contractor or subcontractors, as appropriate, shall either pay the benefit

as stated in the wage determination or shall pay another bona fide fringe benefit or an hourly case equivalent thereof.

b. If the contractor or subcontractor, as appropriate, does not make payments to a trustee or other third person, he/she may consider as a part of the wages of any laborer or mechanic the amount of any costs reasonably anticipated in providing bona fide fringe benefits under a plan or program, provided, that the Secretary of Labor has found, upon the written request of the contractor, that the applicable standards of the Davis-Bacon Act have been met. The Secretary of Labor may require the contractor to set aside in a separate account assets for the meeting of obligations under the plan or program.

4. Apprentices and Trainees (Programs of the U.S. DOL) and Helpers:

a. Apprentices:

(1) Apprentices will be permitted to work at less than the predetermined rate for the work they performed when they are employed pursuant to and individually registered in a bona fide apprenticeship program registered with the DOL, Employment and Training Administration, Bureau of Apprenticeship and Training, or with a State apprenticeship agency recognized by the Bureau, or if a person is employed in his/her first 90 days of probationary employment as an apprentice in such an apprenticeship program, who is not individually registered in the program, but who has been certified by the Bureau of Apprenticeship and Training or a State apprenticeship agency (where appropriate) to be eligible for probationary employment as an apprentice.

(2) The allowable ratio of apprentices to journeyman-level employees on the job site in any craft classification shall not be greater than the ratio permitted to the contractor as to the entire work force under the registered program. Any employee listed on a payroll at an apprentice wage rate, who is not registered or otherwise employed as stated above, shall be paid not less than the applicable wage rate listed in the wage determination for the classification of work actually performed. In addition, any apprentice performing work on the job site in excess of the ratio permitted under the registered program shall be paid not less than the applicable wage rate on the wage determination for the work actually performed. Where a contractor or subcontractor is performing construction on a project in a locality other than that in which its program is registered, the ratios and wage rates (expressed in percentages of the journeyman-level hourly rate) specified in the contractor's or subcontractor's registered program shall be observed.

(3) Every apprentice must be paid at not less than the rate specified in the registered program for the apprentice's level of progress, expressed as a percentage of the journeyman-level hourly rate specified in the applicable wage determination. Apprentices shall be paid fringe benefits in accordance with the provisions of the apprenticeship program. If the apprenticeship program does not specify fringe benefits, apprentices must be paid the full amount of fringe benefits listed on the wage determination for the applicable classification. If the Administrator for the Wage and Hour Division determines that a different practice prevails for the applicable apprentice classification, fringes shall be paid in accordance with that determination.

(4) In the event the Bureau of Apprenticeship and Training, or a State apprenticeship agency recognized by the Bureau, withdraws approval of an apprenticeship program, the contractor or subcontractor will no longer be permitted to utilize apprentices at less than the applicable predetermined rate for the comparable work performed by regular employees until an acceptable program is approved.

b. Trainees:

(1) Except as provided in 29 CFR 5.16, trainees will not be permitted to work at less than the predetermined rate for the work performed unless they are employed pursuant to and individually registered in a program which has received prior approval, evidenced by formal certification by the DOL, Employment and Training Administration.

(2) The ratio of trainees to journeyman-level employees on the job site shall not be greater than permitted under the plan approved by the Employment and Training Administration. Any employee listed on the payroll at a trainee rate who is not registered and participating in a training plan approved by the Employment and Training Administration shall be paid not less than the applicable wage rate on the wage determination for the classification of work actually performed. In addition, any trainee performing work on the job site in excess of the ratio permitted under the registered program shall be paid not less than the applicable wage rate on the wage determination for the work actually performed.

(3) Every trainee must be paid at not less than the rate specified in the approved program for his/her level of progress, expressed as a percentage of the journeyman-level hourly rate specified in the applicable wage determination. Trainees shall be paid fringe benefits in accordance with the provisions of the trainee program. If the trainee program does not mention fringe benefits, trainees shall be paid the full amount of fringe benefits listed on the wage determination unless the Administrator of the Wage and Hour Division determines that there is an apprenticeship program associated with the corresponding journeyman-level wage rate on the wage determination which provides for less than full fringe benefits for apprentices, in which case such trainees shall receive the same fringe benefits as apprentices.

(4) In the event the Employment and Training Administration withdraws approval of a training program, the contractor or subcontractor will no longer be permitted to utilize trainees at less than the applicable predetermined rate for the work performed until an acceptable program is approved.

c. Helpers:

Helpers will be permitted to work on a project if the helper classification is specified and defined on the applicable wage determination or is approved pursuant to the conformance procedure set forth in Section IV.2. Any worker listed on a payroll at a helper wage rate, who is not a helper under an approved definition, shall be paid not less than the applicable wage rate on the wage determination for the classification of work actually performed.

5. Apprentices and Trainees (Programs of the U.S. DOT):

Apprentices and trainees working under apprenticeship and skill training programs which have been certified by the Secretary of Transportation as promoting EEO in connection with Federal-aid highway construction programs are not subject to the requirements of paragraph 4 of this Section IV. The straight time hourly wage rates for apprentices and trainees under such programs will be established by the particular programs. The ratio of apprentices and trainees to journeymen shall not be greater than permitted by the terms of the particular program.

6. Withholding:

The SHA shall upon its own action or upon written request of an authorized representative of the DOL withhold, or cause to be withheld, from the contractor or subcontractor under this contract or any other Federal contract with the same prime contractor, or any other federally-assisted contract subject to Davis-Bacon prevailing wage requirements which is held by the same prime contractor, as much of the accrued payments or advances as may be considered necessary to pay laborers and mechanics, including apprentices, trainees, and helpers, employed by the contractor or any subcontractor the full amount of wages required by the contract. In the event of failure to pay any laborer or mechanic, including any apprentice, trainee, or helper, employed or working on the site of the work, all or part of the wages required by the contract, the SHA contracting officer may, after written notice to the contractor, take such action as may be necessary to cause the suspension of any further payment, advance, or guarantee of funds until such violations have ceased.

7. Overtime Requirements:

No contractor or subcontractor contracting for any part of the contract work which may require or involve the employment of laborers, mechanics, watchmen, or guards (including apprentices, trainees, and helpers described in paragraphs 4 and 5 above) shall require or permit any laborer, mechanic, watchman, or guard in any workweek in which he/she is employed on such work, to work in excess of 40 hours in such workweek unless such laborer, mechanic, watchman, or guard receives compensation at a rate not less than one-and-one-half times his/her basic rate of pay for all hours worked in excess of 40 hours in such workweek.

8. Violation:

Liability for Unpaid Wages; Liquidated Damages: In the event of any violation of the clause set forth in paragraph 7 above, the contractor and any subcontractor responsible thereof shall be liable to the affected employee for his/her unpaid wages. In addition, such contractor and subcontractor shall be liable to the United States (in the case of work done under contract for the District of Columbia or a territory, to such District or to such territory) for liquidated damages. Such liquidated damages shall be computed with respect to each individual laborer, mechanic, watchman, or guard employed in violation of the clause set forth in paragraph 7, in the sum of $10 for each calendar day on which such employee was required or permitted to work in excess of the standard work week of 40 hours without payment of the overtime wages required by the clause set forth in paragraph 7.

9. Withholding for Unpaid Wages and Liquidated Damages:

The SHA shall upon its own action or upon written request of any authorized representative of the DOL withhold, or cause to be withheld, from any moneys payable on account of work performed by the contractor or subcontractor under any such contract or any other Federal contract with the same prime contractor, or any other federally-assisted contract subject to the Contract Work Hours and Safety Standards Act, which is held by the same prime contractor, such sums as may be determined to be necessary to satisfy any liabilities of such contractor or subcontractor for unpaid wages and liquidated damages as provided in the clause set forth in paragraph 8 above.

V. STATEMENTS AND PAYROLLS

(Applicable to all Federal-aid construction contracts exceeding $2,000 and to all related subcontracts, except for projects located on roadways classified as local roads or rural collectors, which are exempt.)

1. Compliance with Copeland Regulations (29 CFR 3):

The contractor shall comply with the Copeland Regulations of the Secretary of Labor which are herein incorporated by reference.

2. Payrolls and Payroll Records:

a. Payrolls and basic records relating thereto shall be maintained by the contractor and each subcontractor during the course of the work and preserved for a period of 3 years from the date of completion of the contract for all laborers, mechanics, apprentices, trainees, watchmen, helpers, and guards working at the site of the work.

b. The payroll records shall contain the name, social security number, and address of each such employee; his or her correct classification; hourly rates of wages paid (including rates of contributions or costs anticipated for bona fide fringe benefits or cash equivalent thereof the types described in Section 1(b)(2)(B) of the Davis Bacon Act); daily and weekly number of hours worked; deductions made; and actual wages paid. In addition, for Appalachian contracts, the payroll records shall contain a notation indicating whether the employee does, or does not, normally reside in the labor area as defined in Attachment A, paragraph 1. Whenever the Secretary of Labor, pursuant to Section IV, paragraph 3b, has found that the wages of any laborer or mechanic include the amount of any costs reasonably anticipated in providing benefits under a plan or program described in Section 1(b)(2)(B) of the Davis Bacon Act, the contractor and each subcontractor shall maintain records which show that the commitment to provide such benefits is enforceable, that the plan or program is financially responsible, that the plan or program has been communicated in writing to the laborers or mechanics affected, and show the cost anticipated or the actual cost incurred in providing benefits. Contractors or subcontractors employing apprentices or trainees under approved programs shall maintain written evidence of the registration of apprentices and trainees, and ratios and wage rates prescribed in the applicable programs.

c. Each contractor and subcontractor shall furnish, each week in which any contract work is performed, to the SHA resident engineer a payroll of wages paid each of its employees (including apprentices, trainees, and helpers, described in Section IV, paragraphs 4 and 5, and watchmen and guards engaged on work during the preceding weekly payroll period). The payroll submitted shall set out accurately and completely all of the information required to be maintained under paragraph 2b of this Section V. This information may be submitted in any form desired. Optional Form WH-347 is available for this purpose and may be purchased from the Superintendent of Documents (Federal stock number 029-005-0014-1), U.S. Government Printing Office, Washington, D.C. 20402. The prime contractor is responsible for the submission of copies of payrolls by all subcontractors.

d. Each payroll submitted shall be accompanied by a "Statement of Compliance," signed by the contractor or subcontractor or his/her agent who pays or supervises the payment of the persons employed under the contract and shall certify the following:

(1) that the payroll for the payroll period contains the information required to be maintained under paragraph 2b of this Section V and that such information is correct and complete;

(2) that such laborer or mechanic (including each helper, apprentice, and trainee) employed on the contract during the payroll period has been paid the full weekly wages earned, without rebate, either directly or indirectly, and that no deductions have been made either directly or indirectly from the full wages earned, other than permissible deductions as set forth in the Regulations, 29 CFR 3;

(3) that each laborer or mechanic has been paid not less that the applicable wage rate and fringe benefits or cash equivalent for the classification of worked performed, as specified in the applicable wage determination incorporated into the contract.

e. The weekly submission of a properly executed certification set forth on the reverse side of Optional Form WH-347 shall satisfy the requirement for submission of the "Statement of Compliance" required by paragraph 2d of this Section V.

f. The falsification of any of the above certifications may subject the contractor to civil or criminal prosecution under 18 U.S.C. 1001 and 31 U.S.C. 231.

g. The contractor or subcontractor shall make the records required under paragraph 2b of this Section V available for inspection, copying, or transcription by authorized representatives of the SHA, the FHWA, or the DOL, and shall permit such representatives to interview employees during working hours on the job. If the contractor or subcontractor fails to submit the required records or to make them available, the SHA, the FHWA, the DOL, or all may, after written notice to the contractor, sponsor, applicant, or owner, take such actions as may be necessary to cause the suspension of any further payment, advance, or guarantee of funds. Furthermore, failure to submit the required records upon request or to make such records available may be grounds for debarment action pursuant to 29 CFR 5.12.

VI. RECORD OF MATERIALS, SUPPLIES, AND LABOR

1. On all Federal-aid contracts on the National Highway System, except those which provide solely for the installation of protective devices at railroad grade crossings, those which are constructed on a force account or direct labor basis, highway beautification contracts, and contracts for which the total final construction cost for roadway and bridge is less than $1,000,000 (23 CFR 635); the contractor shall:

a. Become familiar with the list of specific materials and supplies contained in Form FHWA-47, "Statement of Materials and Labor Used by Contractor of Highway Construction Involving Federal Funds," prior to the commencement of work under this contract.

b. Maintain a record of the total cost of all materials and supplies purchased for and incorporated in the work, and also of the quantities of those specific materials and supplies listed on Form FHWA-47, and in the units shown on Form FHWA-47.

c. Furnish, upon the completion of the contract, to the SHA resident engineer on Form FHWA-47 together with the data required in paragraph 1b relative to materials and supplies, a final labor summary of all contract work indicating the total hours worked and the total amount earned.

2. At the prime contractor's option, either a single report covering all contract work or separate reports for the contractor and for each subcontract shall be submitted.

VII. SUBLETTING OR ASSIGNING THE CONTRACT

1. The contractor shall perform with its own organization contract work amounting to not less than 30 percent (or a greater percentage if specified elsewhere in the contract) of the total original contract price, excluding any specialty items designated by the State. Specialty items may be performed by subcontract and the amount of any such specialty items performed may be deducted from the total original contract price before computing the amount of work required to be performed by the contractor's own organization (23 CFR 635).

a. "Its own organization" shall be construed to include only workers employed and paid directly by the prime contractor and equipment owned or rented by the prime contractor, with or without operators. Such term does not include employees or equipment of a subcontractor, assignee, or agent of the prime contractor.

b. "Specialty Items" shall be construed to be limited to work that requires highly specialized knowledge, abilities, or equipment not ordinarily available in the type of contracting organizations qualified and expected to bid on the contract as a whole and in general are to be limited to minor components of the overall contract.

2. The contract amount upon which the requirements set forth in paragraph 1 of Section VII is computed includes the cost of material and manufactured products which are to be purchased or produced by the contractor under the contract provisions.

3. The contractor shall furnish (a) a competent superintendent or supervisor who is employed by the firm, has full authority to direct performance of the work in accordance with the contract requirements, and is in charge of all construction operations (regardless of who performs the work) and (b) such other of its own organizational resources (supervision, management, and engineering services) as the SHA contracting officer determines is necessary to assure the performance of the contract.

4. No portion of the contract shall be sublet, assigned or otherwise disposed of except with the written consent of the SHA contracting officer, or authorized representative, and such consent when given shall not be construed to relieve the contractor of any responsibility for the fulfillment of the contract. Written consent will be given only after the SHA has assured that each subcontract is evidenced in writing and that it contains all pertinent provisions and requirements of the prime contract.

VIII. SAFETY: ACCIDENT PREVENTION

1. In the performance of this contract the contractor shall comply with all applicable Federal, State, and local laws governing safety, health, and sanitation (23 CFR 635). The contractor shall provide all safeguards, safety devices and protective equipment and take any other needed actions as it determines, or as the SHA contracting officer may determine, to be reasonably necessary to protect the life and health of employees on the job and the safety of the public and to protect property in connection with the performance of the work covered by the contract.

2. It is a condition of this contract, and shall be made a condition of each subcontract, which the contractor enters into pursuant to this contract, that the contractor and any subcontractor shall not permit any employee, in performance of the contract, to work in surroundings or under conditions which are unsanitary, hazardous or dangerous to his/her health or safety, as determined under construction safety and health standards (29 CFR 1926) promulgated by the Secretary of Labor, in accordance with Section 107 of the Contract Work Hours and Safety Standards Act (40 U.S.C. 333).

3. Pursuant to 29 CFR 1926.3, it is a condition of this contract that the Secretary of Labor or authorized representative thereof, shall have right of entry to any site of contract performance to inspect or investigate the matter of compliance with the construction safety and health standards and to carry out the duties of the Secretary under Section 107 of the Contract Work Hours and Safety Standards Act (40 U.S.C. 333).

IX. FALSE STATEMENTS CONCERNING HIGHWAY PROJECTS

In order to assure high quality and durable construction in conformity with approved plans and specifications and a high degree of reliability on statements and representations made by engineers, contractors, suppliers, and workers on Federal-aid highway projects, it is essential that all persons concerned with the project perform their functions as carefully, thoroughly, and honestly as possible. Willful falsification, distortion, or misrepresentation with respect to any facts related to the project is a violation of Federal law. To prevent any misunderstanding regarding the seriousness of these and similar acts, the following notice shall be posted on each Federal-aid highway project (23 CFR 635) in one or more places where it is readily available to all persons concerned with the project:

NOTICE TO ALL PERSONNEL ENGAGED ON FEDERAL-AID HIGHWAY PROJECTS

18 U.S.C. 1020 reads as follows:

"Whoever being an officer, agent, or employee of the United States, or any State or Territory, or whoever, whether a person, association, firm, or corporation, knowingly makes any false statement, false representation, or false report as to the character, quality, quantity, or cost of the material used or to be used, or the quantity or quality of the work performed or to be performed, or the cost thereof in connection with the submission of plans, maps, specifications, contracts, or costs of construction on any highway or related project submitted for approval to the Secretary of Transportation; or

Whoever knowingly makes any false statement, false representation, false report or false claim with respect to the character, quality, quantity, or cost of any work performed or to be performed, or materials furnished or to be furnished, in connection with the construction of any highway or related project approved by the Secretary of Transportation; or

Whoever knowingly makes any false statement or false representation as to material fact in any statement, certificate, or report submitted pursuant to provisions of the Federal-aid Roads Act approved July 1, 1916, (39 Stat. 355), as amended and supplemented;

Shall be fined not more that $10,000 or imprisoned not more than 5 years or both."

X. IMPLEMENTATION OF CLEAN AIR ACT AND FEDERAL WATER POLLUTION CONTROL ACT

(Applicable to all Federal-aid construction contracts and to all related subcontracts of $100,000 or more.)

By submission of this bid or the execution of this contract, or subcontract, as appropriate, the bidder, Federal-aid construction contractor, or subcontractor, as appropriate, will be deemed to have stipulated as follows:

1. That any facility that is or will be utilized in the performance of this contract, unless such contract is exempt under the Clean Air Act, as amended (42 U.S.C. 1857 et seq., as amended by Pub. L. 91-604), and under the Federal Water Pollution Control Act, as amended (33 U.S.C. 1251 et seq., as amended by Pub. L. 92-500), Executive Order 11738, and regulations in implementation thereof (40 CFR 15) is not listed, on the date of contract award, on the U.S. Environmental Protection Agency (EPA) List of Violating Facilities pursuant to 40 CFR 15.20.

2. That the firm agrees to comply and remain in compliance with all the requirements of Section 114 of the Clean Air Act and Section 308 of the Federal Water Pollution Control Act and all regulations and guidelines listed thereunder.

3. That the firm shall promptly notify the SHA of the receipt of any communication from the Director, Office of Federal Activities, EPA, indicating that a facility that is or will be utilized

for the contract is under consideration to be listed on the EPA List of Violating Facilities.

4. That the firm agrees to include or cause to be included the requirements of paragraph 1 through 4 of this Section X in every nonexempt subcontract, and further agrees to take such action as the government may direct as a means of enforcing such requirements.

XI. CERTIFICATION REGARDING DEBARMENT, SUSPENSION, INELIGIBILITY AND VOLUNTARY EXCLUSION

1. Instructions for Certification - Primary Covered Transactions:

(Applicable to all Federal-aid contracts - 49 CFR 29)

a. By signing and submitting this proposal, the prospective primary participant is providing the certification set out below.

b. The inability of a person to provide the certification set out below will not necessarily result in denial of participation in this covered transaction. The prospective participant shall submit an explanation of why it cannot provide the certification set out below. The certification or explanation will be considered in connection with the department or agency's determination whether to enter into this transaction. However, failure of the prospective primary participant to furnish a certification or an explanation shall disqualify such a person from participation in this transaction.

c. The certification in this clause is a material representation of fact upon which reliance was placed when the department or agency determined to enter into this transaction. If it is later determined that the prospective primary participant knowingly rendered an erroneous certification, in addition to other remedies available to the Federal Government, the department or agency may terminate this transaction for cause of default.

d. The prospective primary participant shall provide immediate written notice to the department or agency to whom this proposal is submitted if any time the prospective primary participant learns that its certification was erroneous when submitted or has become erroneous by reason of changed circumstances.

e. The terms "covered transaction," "debarred," "suspended," "ineligible," "lower tier covered transaction," "participant," "person," "primary covered transaction," "principal," "proposal," and "voluntarily excluded," as used in this clause, have the meanings set out in the Definitions and Coverage sections of rules implementing Executive Order 12549. You may contact the department or agency to which this proposal is submitted for assistance in obtaining a copy of those regulations.

f. The prospective primary participant agrees by submitting this proposal that, should the proposed covered transaction be entered into, it shall not knowingly enter into any lower tier covered transaction with a person who is debarred, suspended, declared ineligible, or voluntarily excluded from participation in this covered transaction, unless authorized by the department or agency entering into this transaction.

g. The prospective primary participant further agrees by submitting this proposal that it will include the clause titled "Certification Regarding Debarment, Suspension, Ineligibility and Voluntary Exclusion-Lower Tier Covered Transaction," provided by the department or agency entering into this covered transaction, without modification, in all lower tier covered transactions and in all solicitations for lower tier covered transactions.

h. A participant in a covered transaction may rely upon a certification of a prospective participant in a lower tier covered transaction that is not debarred, suspended, ineligible, or voluntarily excluded from the covered transaction, unless it knows that the certification is erroneous. A participant may decide the method and frequency by which it determines the eligibility of its principals. Each participant may, but is not required to, check the nonprocurement portion of the "Lists of Parties Excluded From Federal Procurement or Nonprocurement Programs" (Nonprocurement List) which is compiled by the General Services Administration.

i. Nothing contained in the foregoing shall be construed to require establishment of a system of records in order to render in good faith the certification required by this clause. The knowledge and information of participant is not required to exceed that which is normally possessed by a prudent person in the ordinary course of business dealings.

j. Except for transactions authorized under paragraph f of these instructions, if a participant in a covered transaction knowingly enters into a lower tier covered transaction with a person who is suspended, debarred, ineligible, or voluntarily excluded from participation in this transaction, in addition to other remedies available to the Federal Government, the department or agency may terminate this transaction for cause or default.

*** * * * ***

Certification Regarding Debarment, Suspension, Ineligibility and Voluntary Exclusion—Primary Covered Transactions

1. The prospective primary participant certifies to the best of its knowledge and belief, that it and its principals:

a. Are not presently debarred, suspended, proposed for debarment, declared ineligible, or voluntarily excluded from covered transactions by any Federal department or agency;

b. Have not within a 3-year period preceding this proposal been convicted of or had a civil judgment rendered against them for commission of fraud or a criminal offense in connection with obtaining, attempting to obtain, or performing a public (Federal, State or local) transaction or contract under a public transaction; violation of Federal or State antitrust statutes or commission of embezzlement, theft, forgery, bribery, falsification or destruction of records, making false statements, or receiving stolen property;

c. Are not presently indicted for or otherwise criminally or civilly charged by a governmental entity (Federal, State or local) with commission of any of the offenses enumerated in paragraph 1b of this certification; and

Form 1273 — Revised 3-95
08-07-95

d. Have not within a 3-year period preceding this application/proposal had one or more public transactions (Federal, State or local) terminated for cause or default.

2. Where the prospective primary participant is unable to certify to any of the statements in this certification, such prospective participant shall attach an explanation to this proposal.

* * * * *

2. Instructions for Certification - Lower Tier Covered Transactions:

(Applicable to all subcontracts, purchase orders and other lower tier transactions of $25,000 or more - 49 CFR 29)

a. By signing and submitting this proposal, the prospective lower tier is providing the certification set out below.

b. The certification in this clause is a material representation of fact upon which reliance was placed when this transaction was entered into. If it is later determined that the prospective lower tier participant knowingly rendered an erroneous certification, in addition to other remedies available to the Federal Government, the department or agency with which this transaction originated may pursue available remedies, including suspension and/or debarment.

c. The prospective lower tier participant shall provide immediate written notice to the person to which this proposal is submitted if at any time the prospective lower tier participant learns that its certification was erroneous by reason of changed circumstances.

d. The terms "covered transaction," "debarred," "suspended," "ineligible," "primary covered transaction," "participant," "person," "principal," "proposal," and "voluntarily excluded," as used in this clause, have the meanings set out in the Definitions and Coverage sections of rules implementing Executive Order 12549. You may contact the person to which this proposal is submitted for assistance in obtaining a copy of those regulations.

e. The prospective lower tier participant agrees by submitting this proposal that, should the proposed covered transaction be entered into, it shall not knowingly enter into any lower tier covered transaction with a person who is debarred, suspended, declared ineligible, or voluntarily excluded from participation in this covered transaction, unless authorized by the department or agency with which this transaction originated.

f. The prospective lower tier participant further agrees by submitting this proposal that it will include this clause titled "Certification Regarding Debarment, Suspension, Ineligibility and Voluntary Exclusion-Lower Tier Covered Transaction," without modification, in all lower tier covered transactions and in all solicitations for lower tier covered transactions.

g. A participant in a covered transaction may rely upon a certification of a prospective participant in a lower tier covered transaction that is not debarred, suspended, ineligible, or voluntarily excluded from the covered transaction, unless it knows that the certification is erroneous. A participant may decide the method and frequency by which it determines the eligibility of its principals. Each participant may, but is not required to, check the Nonprocurement List.

h. Nothing contained in the foregoing shall be construed to require establishment of a system of records in order to render in good faith the certification required by this clause. The knowledge and information of participant is not required to exceed that which is normally possessed by a prudent person in the ordinary course of business dealings.

i. Except for transactions authorized under paragraph e of these instructions, if a participant in a covered transaction knowingly enters into a lower tier covered transaction with a person who is suspended, debarred, ineligible, or voluntarily excluded from participation in this transaction, in addition to other remedies available to the Federal Government, the department or agency with which this transaction originated may pursue available remedies, including suspension and/or debarment.

* * * * *

Certification Regarding Debarment, Suspension, Ineligibility and Voluntary Exclusion-Lower Tier Covered Transactions

1. The prospective lower tier participant certifies, by submission of this proposal, that neither it nor its principals is presently debarred, suspended, proposed for debarment, declared ineligible, or voluntarily excluded from participation in this transaction by any Federal department or agency.

2. Where the prospective lower tier participant is unable to certify to any of the statements in this certification, such prospective participant shall attach an explanation to this proposal.

* * * * *

XII. CERTIFICATION REGARDING USE OF CONTRACT FUNDS FOR LOBBYING

(Applicable to all Federal-aid construction contracts and to all related subcontracts which exceed $100,000 - 49 CFR 20)

1. The prospective participant certifies, by signing and submitting this bid or proposal, to the best of his or her knowledge and belief, that:

a. No Federal appropriated funds have been paid or will be paid, by or on behalf of the undersigned, to any person for influencing or attempting to influence an officer or employee of any Federal agency, a Member of Congress, an officer or employee of Congress, or an employee of a Member of Congress in connection with the awarding of any Federal contract, the making of any Federal grant, the making of any Federal loan, the entering into of any cooperative agreement, and the extension, continuation, renewal, amendment, or modification of any Federal contract, grant, loan, or cooperative agreement.

b. If any funds other than Federal appropriated funds have been paid or will be paid to any person for influencing or attempting to influence an officer or employee of any Federal agency, a Member of Congress, an officer or employee of Congress, or an employee of a Member of Congress in connection with this Federal contract,

grant, loan, or cooperative agreement, the undersigned shall complete and submit Standard Form-LLL, "Disclosure Form to Report Lobbying," in accordance with its instructions.

2. This certification is a material representation of fact upon which reliance was placed when this transaction was made or entered into. Submission of this certification is a prerequisite for making or entering into this transaction imposed by 31 U.S.C. 1352. Any person who fails to file the required certification shall be subject to a civil penalty of not less than $10,000 and not more than $100,000 for each such failure.

3. The prospective participant also agrees by submitting his or her bid or proposal that he or she shall require that the language of this certification be included in all lower tier subcontracts, which exceed $100,000 and that all such recipients shall certify and disclose accordingly.

Female and Minority Goals

To comply with Section II, "Nondiscrimination," of "Required Contract Provisions Federal-Aid Construction Contracts," the following are goals for female and minority utilization goals for Federal-aid construction contracts and subcontracts that exceed $10,000:

The nationwide goal for female utilization is 6.9 percent.

The goals for minority utilization [45 Fed Reg 65984 (10/3/1980)] are as follows:

Minority Utilization Goals

Economic Area		Goal (Percent)
174	Redding CA: Non-SMSA Counties: CA Lassen; CA Modoc; CA Plumas; CA Shasta; CA Siskiyou; CA Tehama	6.8
175	Eureka, CA Non-SMSA Counties: CA Del Norte; CA Humboldt; CA Trinity	6.6
176	San Francisco-Oakland-San Jose, CA: SMSA Counties: 7120 Salinas-Seaside-Monterey, CA CA Monterey 7360 San Francisco-Oakland CA Alameda; CA Contra Costa; CA Marin; CA San Francisco; CA San Mateo 7400 San Jose, CA CA Santa Clara, CA 7485 Santa Cruz, CA CA Santa Cruz 7500 Santa Rosa CA Sonoma 8720 Vallejo-Fairfield-Napa, CA CA Napa; CA Solano Non-SMSA Counties: CA Lake; CA Mendocino; CA San Benito	 28.9 25.6 19.6 14.9 9.1 17.1 23.2
177	Sacramento, CA: SMSA Counties: 6920 Sacramento, CA CA Placer; CA Sacramento; CA Yolo Non-SMSA Counties CA Butte; CA Colusa; CA El Dorado; CA Glenn; CA Nevada; CA Sierra; CA Sutter; CA Yuba	 16.1 14.3
178	Stockton-Modesto, CA: SMSA Counties: 5170 Modesto, CA CA Stanislaus 8120 Stockton, CA CA San Joaquin Non-SMSA Counties CA Alpine; CA Amador; CA Calaveras; CA Mariposa; CA Merced; CA Toulumne	 12.3 24.3 19.8
179	Fresno-Bakersfield, CA SMSA Counties: 0680 Bakersfield, CA CA Kern 2840 Fresno, CA CA Fresno Non-SMSA Counties: CA Kings; CA Madera; CA Tulare	 19.1 26.1 23.6

180	Los Angeles, CA: SMSA Counties: 0360 Anaheim-Santa Ana-Garden Grove, CA CA Orange 4480 Los Angeles-Long Beach, CA CA Los Angeles 6000 Oxnard-Simi Valley-Ventura, CA CA Ventura 6780 Riverside-San Bernardino-Ontario, CA CA Riverside; CA San Bernardino 7480 Santa Barbara-Santa Maria-Lompoc, CA CA Santa Barbara Non-SMSA Counties CA Inyo; CA Mono; CA San Luis Obispo	 11.9 28.3 21.5 19.0 19.7 24.6
181	San Diego, CA: SMSA Counties 7320 San Diego, CA CA San Diego Non-SMSA Counties CA Imperial	 16.9 18.2

For each July during which work is performed under the contract, you and each non-material-supplier subcontractor with a subcontract of $10,000 or more must complete Form FHWA PR-1391 (Appendix C to 23 CFR 230). Submit the forms by August 15.

Training

This section applies if a number of trainees or apprentices is specified in the special provisions. The goal for the number of trainees or apprentices be trained under the requirement of this Special Provision will be 7.

As part of your equal opportunity affirmative action program, provide on-the-job training to develop full journeymen in the types of trades or job classifications involved.

You have primary responsibility for meeting this training requirement.

If you subcontract a contract part, determine how many trainees or apprentices are to be trained by the subcontractor.

Include these training requirements in your subcontract.

Where feasible, 25 percent of apprentices or trainees in each occupation must be in their 1st year of apprenticeship or training.

Distribute the number of apprentices or trainees among the work classifications on the basis of your needs and the availability of journeymen in the various classifications within a reasonable recruitment area.

Before starting work, submit to the City San Diego:

1. Number of apprentices or trainees to be trained for each classification.
2. Training program to be used.
3. Training starting date for each classification.

Obtain the City San Diego approval for this submitted information before you start work. The City San Diego credits you for each apprentice or trainee you employ on the work who is currently enrolled or becomes enrolled in an approved program.

The primary objective of this section is to train and upgrade minorities and women toward journeymen status. Make every effort to enroll minority and women apprentices or trainees, such as conducting systematic and direct recruitment through public and private sources likely to yield minority and women apprentices or trainees, to the extent they are available within a reasonable recruitment area. Show that you have made the efforts. In making these efforts, do not discriminate against any applicant for training.

Do not employ as an apprentice or trainee an employee:

1. In any classification in which the employee has successfully completed a training course leading to journeyman status, or in which the employee has been employed as a journeyman.
2. Who is not registered in a program approved by the US Department of Labor, Bureau of Apprenticeship and Training.

Ask the employee if the employee has successfully completed a training course leading to journeyman status, or has been employed as a journeyman. Your records must show the employee's answers to the questions.

In your training program, establish the minimum length and training type for each classification. The City of San Diego and FHWA approves a program if one of the following is met:

1. It is calculated to:

   1.1. Meet your equal employment opportunity responsibilities.

   1.2. Qualify the average apprentice or trainee for journeyman status in the classification involved by the end of the training period.

2. It is registered with the U.S. Department of Labor, Bureau of Apprenticeship and Training and it is administered in a way consistent with the equal employment responsibilities of federal-aid highway construction contracts.

Obtain the State's approval for your training program before you start work involving the classification covered by the program.

Provide training in the construction crafts, not in clerk-typist or secretarial-type positions. Training is allowed in lower level management positions such as office engineers, estimators, and timekeepers if the training is oriented toward construction applications. Training is allowed in the laborer classification if significant and meaningful training is provided and approved by the division office. Off-site training is allowed if the training is an integral part of an approved training program and does not make up a significant part of the overall training.

The City of San Diego reimburses you 80 cents per hour of training given an employee on this contract under an approved training program:

1. For on-site training.
2. For off-site training if the apprentice or trainee is currently employed on a federal-aid project and you do at least one of the following:

   2.1. Contribute to the cost of the training.
   2.2. Provide the instruction to the apprentice or trainee.
   2.3. Pay the apprentice's or trainee's wages during the off-site training period.

3. If you comply with this section.

Each apprentice or trainee must:

1. Begin training on the project as soon as feasible after the start of work involving the apprentice's or trainee's skill.
2. Remain on the project as long as training opportunities exist in the apprentice's or trainee's work classification, or until the apprentice or trainee has completed the training program.

Furnish the apprentice or trainee:

1. Copy of the program you will comply with in providing the training.
2. Certification showing the type and length of training satisfactorily completed.

Maintain records and submit reports documenting your performance under this section.

SECTION 21 BLANK

Replace Section 21 with:

SECTION 21 HIGHWAY PLANTING AND IRRIGATION SYSTEMS

21-1.01 GENERAL

The work performed in connection with highway planting and irrigation systems shall conform to the provisions in Section 20, "Erosion Control and Highway Planting," of the Standard Specifications and these special provisions.

The Contractor shall notify the Engineer not less than 72 hours prior to requiring initial access to the existing irrigation controllers. When the Engineer determines that access to the controllers is required at other times, arrangements will be made to provide this access.

21-1.02 PROGRESS INSPECTIONS AND COST BREAK-DOWN

The Contractor shall furnish the Engineer a cost break-down for the contract lump sum items of highway planting and irrigation system. Cost break-down tables shall be submitted to the Engineer for approval within 15 working days after the contract has been approved. Cost break-down tables will be approved, in writing, by the Engineer before any partial payment will be made for the applicable items of highway planting and irrigation system involved.

Cost break-downs shall be completed and furnished in the format shown in the samples of the cost break-downs included in this section. Line item descriptions of work shown in the samples are the minimum to be submitted. Additional line item descriptions of work may be designated by the Contractor. If the Contractor elects to designate additional line item descriptions of work, the quantity, value and amount for those line items shall be completed in the same manner as for the unit descriptions shown in the samples. The line items and quantities given in the samples are to show the manner of preparing the cost break-downs to be furnished by the Contractor.

The Contractor shall determine the quantities required to complete the work shown on the plans. The quantities and their values shall be included in the cost break-downs submitted to the Engineer for approval. The Contractor shall be responsible for the accuracy of the quantities and values used in the cost break-downs submitted for approval.

The sum of the amounts for the line items of work listed in each cost break-down table for highway planting and for irrigation system work shall be equal to the contract lump sum price bid for Highway Planting and Irrigation System, respectively. Overhead and profit, shall be included in each individual line item of work listed in a cost break-down table.

No adjustment in compensation will be made in the contract lump sum prices paid for highway planting and irrigation system due to differences between the quantities shown in the cost break-downs furnished by the Contractor and the quantities required to complete the work as shown on the plans and as specified in these special provisions.

Individual line item values in the approved cost break-down tables will be used to determine partial payments during the progress of the work and as the basis for calculating an adjustment in compensation for the contract lump sum items of highway planting and irrigation system due to changes in line items of work ordered by the Engineer. When the total of ordered changes to line items of work increases or decreases the lump sum price bid for either Highway Planting or Irrigation System by more than 25 percent, the adjustment in compensation for the applicable lump sum item

will be determined in the same manner specified for increases and decreases in the total pay quantity of an item of work in Section 4-1.03B, "Increased or Decreased Quantities," of the Standard Specifications.

Six (6) additional 15-gallon 24" box trees are required for adjacent private residence at the discretion and approval of the engineer. Cost for said trees to be covered by "Highway Planting" lump sum bid item for landscaping.

HIGHWAY PLANTING COST BREAK-DOWN

UNIT DESCRIPTION	UNIT	APPROXIMATE QUANTITY	VALUE	AMOUNT
Roadside Clearing (remove 17 tree, shrubs, ground cover)	LS	Lump Sum		
Imported Topsoil	CY	225		
Prepare Planting Area	SF	12,169		
Mulch	CY	37		
Commercial Fertilizer (Packets)	EA	276		
Plant (Group A – No. 1 Container)	EA	241		
Plant (Group K – 24" Box)	EA	17		
Plant (Group U – N. 15 Container)	EA	10		
Turf	SY	119		
Root Barriers	LF	451		
Check and Testing Existing Irrigation Facilities	LS	Lump Sum		
Soil Amendment:	SF	10868		
Nitrogen Stabilized Organic Wood Shavings	CY	3		
Gro-power Plus	Lbs	543		
Gypsum	Lbs	2,174		
Sulpher	Lbs	109		

TOTAL _____

IRRIGATION SYSTEM COST BREAK-DOWN

UNIT DESCRIPTION	UNIT	APPROXIMATE QUANTITY	VALUE	AMOUNT
1" Automatic Remote Control Irrigation Valves	EA	11		
1½" Automatic Remote Control Irrigation Valves	EA	1		
¾" PVC Schedule 40 lateral line-bury	LF	1355		
1" PVC Schedule 40 lateral line-bury	LF	75		
1½" PVC Schedule 40 lateral line-bury	LF	10		
2" PVC Schedule 40 lateral line-bury	LF	212		
3" PVC Class 315 pressure mainline-bury	LF	275		
Rotor pop-up	EA	36		
Spray pop-up	EA	60		
Bubblers	EA	38		
Root watering system	EA	38		
Control and Neutral Conductors	LS	Lump Sum		
Fittings, Schedule 80	LS	Lump Sum		
Irrigation Controller: 10 station	EA	1		
Irrigation Controller Enclosure Cabinet (single with rain sensor)	EA	1		
Controller Mounting Pad	EA	1		
Ball valves	EA	3		
Quick couplers	EA	4		
Plastic RCV boxes with gravel and brick supports	EA	19		
Concrete RCV boxes with gravel and brick supports	EA	3		
Concrete thrust blocks	LS	Lump Sum		
Crossovers (water pipe sleeves and electric conduit)	LF	100		

TOTAL _____

21-1.03 EXISTING PLANTING

In addition to the provisions in Section 20, "Erosion Control and Highway Planting," of the Standard Specifications, work performed in connection with existing highway planting shall conform to the provisions in Section 15, "Existing Highway Facilities," of the Standard Specifications and these special provisions.

Include Item Code 066103, "Maintain Existing Planted Areas (Extra Work)," in the BEES under Supplemental Work to cover Extra Work.

21-1.04 MAINTAIN EXISTING PLANTED AREAS

Existing planted areas, designated on the plans to be maintained, shall be maintained throughout the life of the contract in conformance with these special provisions.

Attention is directed to "Preservation of Property" of these special provisions.

Existing plants shall be watered in conformance with the provisions in Section 20-4.06, "Watering," of the Standard Specifications.

Existing planted areas to be maintained shall be inspected for deficiencies by the Contractor in the presence of the Engineer. Deficiencies requiring corrective action shall include weeds; dead, diseased, or unhealthy plants; missing plant stakes and tree ties; inadequate plant basins; and other deficiencies needing corrective action to promote healthy plant life. The inspection shall be completed within 10 working days after the start of work.

Deficiencies found during the inspection shall be corrected within 10 working days after the inspection ends. Correction of deficiencies, as directed by the Engineer, will be paid for as extra work in conformance with the provisions in Section 4-1.03D, "Extra Work," of the Standard Specifications.

When directed by the Engineer, existing plants shall be pruned and the work will be paid for as extra work in conformance with the provisions in Section 4-l.03D, "Extra Work," of the Standard Specifications.

After deficiencies have been corrected, the Contractor shall perform work to maintain existing planted areas in a neat appearance and to promote healthy plant growth. The work shall include the following:

A. Weeds shall be killed before the weeds reach the seed stage of growth or exceed 150 mm {6 inches} in length.
B. Trash, debris and weeds shall be removed from existing planted areas. Weeds shall be killed prior to removal. Trash, debris and weed removal in ground cover areas shall extend beyond the outer limits of ground cover areas to the adjacent edges of paving, fences and proposed plants and planting areas, and a 2-m {6-foot} diameter area centered at each existing tree and shrub outside of existing ground cover areas.
C. Existing plant basins shall be kept well-formed and free of silt. If existing plant basins require repairs, and the plant basins contain mulch, the mulch shall be replaced after the plant basins have been repaired.
D. When a portion of a new automatic irrigation system is completed, the existing plants to be watered by that portion of the irrigation system shall be watered automatically.
E. Pesticides for maintaining existing planted areas shall conform to the provisions in "Pesticides" of these special provisions.

The contract lump sum price paid for maintain existing planted areas shall include full compensation for furnishing all labor, materials, tools, equipment, and incidentals, and for doing all the work involved in maintain existing planted areas, complete in place, as shown on the plans, as specified in the standard specifications and these special provisions, and as directed by the Engineer.

21-1.05 IRRIGATION CONTROLLER ENCLOSURE CABINET

Irrigation controller enclosure cabinets shall be constructed and equipment installed in the cabinets in conformance with the details shown on the plans, the provisions of Section 86-3.04A,

"Cabinet Construction," of the Standard Specifications, and these special provisions.

Electric service is available and shall be provided to the new controller in accordance with "Electric Service (Irrigation)" of these special provisions.

Irrigation controller enclosure cabinets shall be provided with cross ventilation, roof ventilation or a combination of both. The ventilation shall not compromise the weather resistance properties of the irrigation controller enclosure cabinets and shall be fabricated by the manufacturer.

The anchorage arrangement shall be inside the cabinet as shown on the plans. Dimensions of the cabinet shall be suitable for the equipment to be installed as shown on the plans and specified in these special provisions.

Irrigation controller enclosure cabinet dimensions for a single irrigation controller shall be 52 inches (Height) x 18 inches (Width) x 12 inches (Depth).

Irrigation controller enclosure cabinets shall be fabricated in conformance with the provisions in Section 86-3.04A, "Cabinet Construction," of the Standard Specifications.

Irrigation controller enclosure cabinets shall be fabricated of stainless steel.

Inside of the doors shall have provisions for storage of the irrigation plans.

Solid-state automatic shut-off rain sensor units shall be installed for the irrigation controller enclosure cabinets. Rain sensor units shall automatically interrupt the master remote control valves when approximately 1/8 inch of rain has fallen. The irrigation system shall automatically be enabled again when the accumulated rainfall evaporates from the rain sensor unit collection cup. Rain sensor units shall be rated 24 V (ac) to 30 V (ac). Static charge protection shall be included to protect against lightning damage.

Equipment, except for field wiring, shall be installed in the cabinet in a shop prior to field installation.

The contract unit price paid for irrigation controller enclosure cabinet shall include full compensation for furnishing all labor, materials, tools, equipment (including rain sensor units), and incidentals, and for doing all the work involved in fabricating and installing irrigation controller enclosure cabinets, complete in place, including constructing foundations, pads and conduits to pull boxes adjacent to cabinets, and installing equipment within the cabinets, except controllers, as shown on the plans, as specified in the Standard Specifications and these special provisions, and as directed by the Engineer.

21-1.06 EXISTING IRRIGATION FACILITIES

The work performed in connection with the various existing highway irrigation system facilities shall conform to the provisions in Section 15, "Existing Highway Facilities," of the Standard Specifications and these special provisions.

Water shall be maintained in conformance with the provisions in Section 20-5.025, "Maintain Existing Water Supply," of the Standard Specifications.

21-1.07 LOCATE EXISTING CROSSOVERS AND CONDUITS

Existing crossovers and conduits shown on the plans to be incorporated in the new work shall be located in conformance with the provisions for locating conduits in Section 20-5.03B, "Conduit for Irrigation Crossovers," of the Standard Specifications.

Unless otherwise directed by the Engineer, existing crossovers and conduits shown on the plans to be incorporated in the new work shall be located prior to performing work on irrigation systems.

If debris is encountered in the ends of conduits, the debris shall be removed prior to performing other work in the conduits. Removal of debris within the first 3 feet in these conduits shall be at the Contractor's expense. If debris is encountered in the conduits more than 3 feet from the ends of the conduits, the additional debris shall be removed as directed by the Engineer and the removal work will be paid for as extra work as provided in Section 4-1.03D,"Extra Work," of the Standard Specifications.

21-1.08 CHECK AND TEST EXISTING IRRIGATION FACILITIES

Existing irrigation facilities that are to remain or to be relocated, and that are within those areas where clearing and grubbing or earthwork operations are to be performed, shall be checked for missing or damaged components and proper operation prior to performing clearing and grubbing or earthwork operations. Existing irrigation facilities outside of work areas that are affected by the construction work shall also be checked for proper operation.

A written list of existing irrigation system deficiencies shall be submitted to the Engineer within 5 working days after checking the existing facilities.

Deficiencies found during checking of the existing facilities shall be corrected as directed by the Engineer. Corrective work ordered by the Engineer will be paid for as extra work as provided in Section 4-1.03D, "Extra Work," of the Standard Specifications.

When existing irrigation facilities are checked, existing backflow preventers shall be tested for proper operation in conformance with the provisions in Section 20-5.03J, "Check and Test Backflow Preventers," of the Standard Specifications.

Existing backflow preventers shall be retested one year after the satisfactory completion of the previous test, and each year thereafter until the plant establishment period is completed. An additional test shall be provided not more than 10 days prior to acceptance of the contract.

Length of watering cycles for use of potable water from water meters for checking or testing existing irrigation facilities shall be as determined by the Engineer.

Full compensation for checking and testing existing irrigation facilities, including testing existing backflow preventers, shall be considered as included in the contract prices paid per linear foot for the various sizes of plastic pipe (supply line) involved and no additional compensation will be allowed therefore.

21-1.09 MAINTAIN EXISTING IRRIGATION FACILITIES

Existing irrigation facilities shall be maintained throughout the life of the contract. Prior to the start of maintaining existing irrigation facilities work, the facilities shall be checked for proper operation, and repaired in conformance with the provisions in "Check and Test Existing Irrigation Facilities" of these special provisions.

After the existing facilities have been checked and repaired, the Contractor shall be responsible for the routine maintenance of existing irrigation systems. The work shall include, but not limited to, checking irrigation systems for proper operation and adjusting, repairing or replacing valves, valve boxes, sprinklers, risers, swing joints, wye strainers, valve assembly units, and filter assembly units.

The Contractor will not be responsible for maintaining existing water meters, underground pipe supply lines, control and neutral conductors, and electrical conduits. Except as otherwise specified in "Existing Highway Irrigation Facilities" of these special provisions, repair work to these facilities ordered by the Engineer will be paid for as extra work as provided in Section 4-l.03D, "Extra Work," of the Standard Specifications.

Existing automatic irrigation systems shall be operated automatically during the life of the contract, except manual operation will be allowed for the work during plant replacement, fertilization, weed germination, and the repair of irrigation facilities.

Irrigation controllers shall be programmed by the Contractor for seasonal water requirements. During winter seasons irrigation systems shall be operated automatically a minimum of 2 minutes every 2 weeks.

Irrigation systems and facilities shall be checked for proper operation at least once every 30 days. When required, as determined by the Engineer, adjusting, repairing or replacing irrigation facilities shall be completed within 5 working days after checking the irrigation systems. Except as provided in these special provisions, repair and replacement of irrigation facilities shall conform to the provisions in "Existing Highway Irrigation Facilities" of these special provisions.

Except as provided in these special provisions, the contract lump sum price paid for maintain existing irrigation facilities shall include full compensation for furnishing all labor, materials, tools, equipment, and incidentals, and for doing all the work involved in maintaining existing irrigation facilities, complete in place, including checking irrigation facilities, as shown on the plans, as specified in the Standard Specifications and these special provisions, and as directed by the Engineer.

21-1.10 REMOVE EXISTING IRRIGATION FACILITIES

Existing irrigation facilities where shown on the plans to be removed, shall be removed. Facilities that are more than 6 inches below finished grade, excluding facilities to be salvaged, may be abandoned in place.

Immediately after disconnecting an existing irrigation facility to be removed or abandoned from an existing facility to remain, the remaining facility shall be capped or plugged, or shall be connected to a new or existing irrigation facility.

Facilities to be removed shall be disposed of in conformance with the provisions in Section 7-1.13, "Disposal of Material Outside the Highway Right of Way," of the Standard Specifications.

If the proposed wall truncates existing irrigation that services private property, contractor shall install spray irrigation heads as specified in the Standard Specifications and these special provisions, and as directed by the Engineer. New heads shall be adjusted to spray toward the yard and eliminate spray on wall. New spray heads shall not exceed discharge rates of existing heads on the system by more than 10%.

21-1.11 PLANTING

The work performed in connection with highway planting shall conform to the provisions in Section 20-4, "Highway Planting," of the Standard Specifications and these special provisions.

21-1.12 PLANTING MATERIALS

Commercial Fertilizer (Packets)

Commercial fertilizer (packet) shall be slow or controlled release and shall be in a biodegradable packet form. The packet shall gradually release nutrients over a 12-month period. Each packet shall have a weight of 10 g ± 1 g and shall have the following guaranteed chemical analysis

Ingredient	Percentage
Nitrogen	16
Phosphoric Acid	8
Water Soluble Potash	8

21-1.13 CLEARING

Before preparing planting areas or commencing irrigation trenching operations for planting areas, trash and debris shall be removed from these areas as required under Construction Site Management of these special provisions.

The project area shall be cleared as specified herein:

A. Existing plants, where shown on the plans to be removed, shall be removed.

After the initial roadside clearing is complete, additional roadside clearing work shall be performed as necessary to maintain the areas, as specified above, in a neat appearance until the start of the plant establishment period. This work shall include the following:

A. Trash and debris shall be removed.
B. Rodents shall be controlled.
C. Weed growth shall be killed before the weeds reach the seed stage of growth or exceed 6 inches in length, whichever occurs first.
D. Weeds in plant basins, including basin walls, shall be removed by hand pulling, after the plants have been planted.

Weed Control

Weed control shall also conform to the following:

A. Stolon type weeds shall be killed with glyphosate.
B. Removed weeds and ground cover shall be disposed of outside the highway right of way in conformance with the provisions in Section 7-1.13, "Disposal of Material Outside the Highway Right of Way," of the Standard Specifications.
C. At the option of the Contractor, weed growth in mowed areas may be controlled by growth regulators. Growth regulators shall be applied before weeds exceed 12 inches in height.

Roadside clearing work shall not include work required to be performed as clearing and grubbing as specified in Section 16, "Clearing and Grubbing" of the Standard Specifications.

21-1.14 PESTICIDES

Pesticides used to control weeds shall conform to the provisions in Section 20-4.026, "Pesticides," of the Standard Specifications. Except as otherwise provided in these special provisions, pesticide use shall be limited to the following materials:

Cacodylic Acid
Diquat
Fluazifop-butyl
Glyphosate
Isoxaben (Preemergent)
Sethoxydim
Oxadiazon - 50 percent WP (Preemergent)
Oryzalin (Preemergent)
Pendimethalin (Preemergent)
Prodiamine (Preemergent)
Trifluralin (Preemergent)
Ammonium Sulfate
Magnesium Chloride
Melfluidide (Growth regulator)
Napropamide (Preemergent)

Granular preemergents may be used when applied to areas that will be covered with mulch, excluding plant basins. Granular preemergents shall be limited to the following materials:

Dichlobenil (Preemergent)
Oxadiazon (Preemergent)

Granular preemergents shall be applied prior to the application of mulch. Mulch applications shall be completed in these areas on the same working day. Photosensitive dye will not be required.

Glyphosate shall be used to kill stolon type weeds.

Oxadiazon shall be of the emulsifiable concentration or wettable powder type, except when Oxadiazon is used under mulch in conformance with these special provisions.

Prior to the application of preemergents, ground cover plants shall have been planted a minimum of 3 days and shall have been thoroughly watered.

A minimum of 100 days shall elapse between applications of preemergents.

Except for ground cover plants, preemergents shall not be applied within 18 inches of plants or within wild flower seeding areas.

Growth regulators shall not be applied within 6 feet of trees, shrubs or vines.

Ammonium sulfate and magnesium chloride shall be used only in areas planted to Carpobrotus or Delosperma. Ammonium sulfate and magnesium chloride shall not be applied in a manner that allows the pesticides to come in contact with trees or shrubs.

If the Contractor elects to request the use of other pesticides on this project, the request shall be submitted, in writing, to the Engineer not less than 15 days prior to the intended use of the other

pesticides. Except for the pesticides listed in these special provisions, no pesticides shall be used or applied without prior written approval of the Engineer.

Pesticides shall not be applied within the limits of the plant basins. Pesticides shall not be applied in a manner that allows the pesticides to come in contact with the foliage and woody parts of the plants.

21-1.15 PREPARING PLANTING AREAS

Plants adjacent to drainage ditches shall be located so that after construction of the basins, no portion of the basin walls shall be less than the minimum distance shown on the plans for each plant involved.

Unless otherwise specified or shown on the plans, the planting pits width and depth shall be large enough to receive the plant root ball,and commercial fertilizer.

Place commercial fertilizer packets in the backfill of each plant at the time of planting and at the rate shown on the Plant List to within 6 inches to 8 inches of the soil surface and approximately one inch from the roots. When more than one fertilizer packet is required per plant, the packets must be distributed evenly around the root ball.

Trees shall be staked per Standard Specifications and plan details, with stakes extending minimum 36 inches below finished grade. Three stake ties shall be 1” wide adjustable UV resistant flexible vinyl, minimum 24” long for 15-gallon size trees and minimum 32” long for 24” box size trees.

Mulch placed in areas outside of plant basins shall be spread to a uniform depth.

Spread mulch from the outside of the proposed plant basin to the adjacent edges of shoulders, dikes, curbs, sidewalks, walls, fences, and existing plantings.

Do not place mulch within 4 feet of the edge of paved ditches.

Attention is directed to "Irrigation Systems Functional Test" of these special provisions regarding functional tests of the irrigation systems. Do not perform planting in an area until the functional test has been completed for the irrigation system serving that area.

Turf (sod) shall be placed on the areas shown on the plans as "Turf."

Sod shall be Marathon Fescue Blend and shall be healthy field grown sod containing not more than 1/2 inch thick thatch. The age of the sod shall be not less than 8 months or more than 16 months.

Sod shall be grown in conformance with California agricultural codes. The sod shall be free from disease, weeds, insects, and nondesirable types of grasses and clovers. Soil upon which the sod has been grown shall contain less than 50 percent silt and clay.

Sod shall be machine cut at a uniform soil thickness of 5/8 inch ± 1/4 inch, not including top growth and thatch.

A Certificate of Compliance for the sod shall be furnished to the Engineer in conformance with the provisions in Section 6-1.07, "Certificates of Compliance," of the Standard Specifications.

Sod shall be protected with tarps or other protective covers during delivery and shall not be allowed to dry out during delivery or prior to placement.

Areas to be planted to sod shall be cultivated in conformance with the provisions in "Cultivate" of these special provisions.

Weeds and debris shall be removed before cultivation and shall be disposed of in conformance with the provisions in Section 7-1.13, "Disposal of Material Outside the Highway Right of Way," of the Standard Specifications.

Commercial fertilizer shall be applied at the rates shown on the plans.

After installation of irrigation systems and excavation and backfilling of plant holes are completed, areas to be planted to sod shall be fine graded and rolled. Areas to be planted to sod shall be graded to drain and shall be smooth and uniform prior to placing sod. Areas to be planted to sod adjacent to sidewalks, concrete headers, header boards, and other paved borders and surfaced areas shall be 1-1/2 inches ± 1/4 inch below the top grade of the facilities, after fine grading, rolling, and settlement of the soil.

Sod shall be placed so that the ends of adjacent strips of sod are staggered a minimum of 2 feet. Edges and ends of sod shall be placed firmly against adjacent sod and against sidewalks, concrete headers, header boards, and other paved borders and surfaced areas.

After placement of the sod, the entire sodded area shall be lightly rolled to eliminate air pockets and to ensure close contact with the soil. After rolling, the sodded areas shall be watered so that the soil is moistened to a minimum depth of 4 inches. Sod shall not be allowed to dry out.

If irregular or uneven areas appear before or during the plant establishment period, these areas shall be restored to a smooth and even appearance.

When the turf (sod) has reached a height of 5 inches the turf shall be mowed to a height of 2 inches. Turf (sod) edges, including edges adjacent to sidewalks, concrete headers, header boards, and other paved borders and surfaced areas, shall be trimmed to a uniform edge not extending beyond the edge of turf or the facilities. Mowed and trimmed growth shall be removed and disposed of in conformance with the provisions in Section 7-1.13, "Disposal of Material Outside the Highway Right of Way," of the Standard Specifications. Trimming shall be repeated whenever the edge of turf exceeds one inch.

Mowing and trimming turf (sod) and disposing of mowed material, during the plant establishment period, will be paid for in conformance with the provisions in "Plant Establishment Work" of these special provisions.

21-1.16 ROOT BARRIERS

Root barrier work shall consist of providing and installing root barriers for trees as shown on the plans and as specified in these special provisions.

Root barriers shall be an injection molded or extruded modular component made of high-density polypropylene or polyethylene plastic. Panels shall have a minimum thickness of 1/16 inch. Each panel shall have molded vertical ribs (four minimum) and locking strips or integral male/female sliding locks. Vertical root-deflecting ribs or channels shall be between 0.5 inch and 0.8 inch high, perpendicular to the panel, and between 6 inches and 8 inches apart. Panels shall be a minimum of 2 feet wide x3 feet deep.

Root barriers shall be installed between proposed trees and concrete sidewalk, wall, footing, or curb as shown on the plans. Root barriers shall be used where trees are within 15 feet of a concrete sidewalk, wall, footing, or curb and shall extend to the end of the concrete sidewalk, wall, footing, or curb or a minimum of three feet parallel to sidewalk, wall, footing, or curb from the edge of the tree planting pit (whichever is greater). Where trees are planted in narrow planting areas between concrete sidewalks and curbs, root barriers shall be installed along the entire length of both sides of the planting area. Panels shall be installed flush with the finished grade and joined with locking strips or integral male/female sliding locks. Locking mechanism shall have a close tolerance to restrict slippage between panels. Barriers shall be installed with root deflectors facing inward.

Root barriers shall be measured by the total length of panels installed in the field, measured parallel to the ground surface.

21-1.17 PLANT ESTABLISHMENT WORK

The plant establishment period shall be Type 2 and shall not be less than 90 working days.

Attention is directed to "Relief From Maintenance and Responsibility" in these special provisions regarding relief from maintenance and protection.

Weeds within plant basins, including basin walls and ground cover, shall be controlled by hand pulling.

Weeds within pavement areas, curbs, sidewalk, and other surfaced areas shall be controlled by killing.

At the option of the Contractor, plants of a larger container size than those originally specified may be used for replacement plants during the first 125 working days of the plant establishment period.

After 90 working days of the plant establishment period have been completed, replacement of plants, except for ground cover plants, shall be one-gallon size for seedlings, pot and liner size plants; 5-gallon size for one-gallon size plants; 15-gallon size for 5-gallon size plants; and other plant replacement plants shall be the same size as originally specified.

Wye strainers shall be cleaned at least 15 days prior to the completion of the plant establishment period.

The final inspection shall be performed in conformance with the provisions in Section 5-1.13, "Final Inspection," of the Standard Specifications and shall be completed a minimum of 20 working days before the estimated completion of the contract.

21-1.18 IRRIGATION SYSTEMS

Irrigation systems shall be furnished and installed in conformance with the provisions in Section 20-5, "Irrigation Systems," of the Standard Specifications, except materials containing asbestos fibers shall not be used.

Method A pressure testing shall conform to the provisions in Section 20-5.03H(1), "Method A", of the Standard Specifications, except leaks that develop in the tested portion of the system shall be located and repaired after each test period when a drop of more than 5 pounds per square inch is indicated by the pressure gage. After the leaks have been repaired, the one hour pressure test shall be repeated and additional repairs made until the drop in pressure is 5 pounds per square inch or less.

21-1.19 VALVE BOXES

Where new valve boxes are needed, the valve boxes shall conform to the provisions in Section 20-2.24, "Valve Boxes," of the Standard Specifications, except as otherwise provided herein.

Valve boxes next to existing sidewalks shall be precast portland cement concrete. Valve boxes in new planting areas shall be reinforced plastic.

Covers for concrete valve boxes shall be glass fiber reinforced plastic, plastic, or concrete to match box.

Concrete valve boxes shall be identified on the top surface of the covers by stenciling with paint the appropriate abbreviations for the irrigation facilities contained in the valve boxes as shown on the plans. Valve boxes that contain remote control valves shall be identified by the appropriate letters and numbers (controller and station numbers). The letters and numbers shall be 2 inches in height. The stenciling paint shall be a commercial quality, epoxy resin base paint of a color which contrasts with the valve box covers.

Plastic valve boxes shall be identified on the top surface of the covers by branding the appropriate abbreviations for the irrigation facilities contained in the valve boxes as shown on the plans. Valve boxes that contain remote control valves shall be identified by the appropriate letters and numbers (controller and station numbers). The letters and numbers shall be 2 inches in height.

21-1.20 BALL VALVES

Ball valves shall be furnished and installed as shown on the plans and in conformance with these special provisions.

Ball valves shall be manufactured from Chlorinated Polyvinyl Chloride (CPVC) or polyvinyl chloride (PVC) and shall conform to the following:

Specification	Minimum Requirement
Non-shock cold water working pressure for 3/4-inch to 4-inch valves	235 psi
Non-shock cold water working pressure for 6-inch valves	150 psi
Seats	PTFE (Teflon)
O-Ring Seals	EPDM or Viton

Ball valves shall be of the same size as the pipeline which the valves serve, unless otherwise noted on the plans.

Ball valves shall be installed in a valve box.

21-1.21 IRRIGATION CONTROLLERS

Irrigation controllers shall be single, solid-state independent controllers conforming to the following:

A. Irrigation controllers shall be fully automatic and shall operate a complete 14-day or longer irrigation program.
B. A switch or switches shall be provided on the face of the control panel that will turn the irrigation controller "on" or "off" and provide for automatic or manual operation. Manual operation shall allow cycle start at the desired station and shall allow activation of a single station.
C. The watering time of each station shall be displayed on the face of the control panel.
D. The irrigation controller and the low voltage output source shall be protected by fuses or circuit breakers.
E. The irrigation controller mechanism, panel and circuit board shall be connected to the low voltage control and neutral conductors by means of plug and receptacle connectors located in the irrigation controller enclosure.
F. Each station shall have a variable or incremental timing adjustment with a range of 99 minutes to a minimum of one minute, or with a range of 198 minutes with water budgeting employed.
G. Irrigation controllers shall be capable of a minimum of 3 independent program schedules.
H. Irrigation controllers shall have an output that can energize a remote control valve (master).
I. Where direct burial conductors are to be connected to the terminals strip, the conductors shall be connected with the proper size open-end crimp-on wire terminals. No exposed wire shall extend beyond the crimp of the terminal and the wires shall be parallel on the terminal strip.

21-1.22 ELECTRIC AUTOMATIC IRRIGATION COMPONENTS

Irrigation Controllers

Irrigation controllers shall be single, solid-state independent controllers conforming to the following:

A. Irrigation controllers shall be fully automatic and shall operate a complete 14-day or longer irrigation program.
B. A switch or switches shall be provided on the face of the control panel that will turn the irrigation controller "on" or "off" and provide for automatic or manual operation. Manual operation shall allow cycle start at the desired station and shall allow activation of a single station.
C. The watering time of each station shall be displayed on the face of the control panel.
D. The irrigation controller and the low voltage output source shall be protected by fuses or circuit breakers.
E. The irrigation controller mechanism, panel and circuit board shall be connected to the low voltage control and neutral conductors by means of plug and receptacle connectors located in the irrigation controller enclosure.
F. Each station shall have a variable or incremental timing adjustment with a range of 99 minutes to a minimum of one minute, or with a range of 198 minutes with water budgeting employed.
G. Irrigation controllers shall be capable of a minimum of 3 independent program schedules.
H. Irrigation controllers shall have an output that can energize a remote control valve (master).
I. Where direct burial conductors are to be connected to the terminals strip, the conductors shall be connected with the proper size open-end crimp-on wire terminals. No exposed wire shall extend beyond the crimp of the terminal and the wires shall be parallel on the terminal strip.

Electric Remote Control Valves

Electric remote control valves shall conform to the provisions in Section 20-2.23, "Control Valves," of the Standard Specifications and the following:

A. Valves shall be glass filled nylon construction.

B. Valves shall be straight pattern (side inlet) as shown on the plans.

Pull Boxes

Pull box installations shall conform to the provisions in Section 20-5.027I, "Conductors, Electrical Conduits and Pull Boxes," of the Standard Specifications.

Conductors

Low voltage, as used in this section "Conductors," shall mean 36 V or less.

Markers for the control conductors shall be identified with the appropriate number or letter designations of irrigation controllers and station numbers. Markers for neutral conductors shall be identified with the appropriate number or letter designations of the irrigation controllers.

New control and neutral conductors that are to replace existing control and neutral conductors shall be the same size and color as the existing control and neutral conductors being connected to.

The color of low voltage neutral and control conductor insulation, except for the striped portions, shall be homogeneous throughout the entire thickness of the insulation.

Insulation for conductors may be UL listed polyethylene conforming to UL44 test standards with a minimum insulation thickness of 41 mils for wire sizes 10AWG and smaller.

21-1.23 IRRIGATION CONTROLLER ENCLOSURE CABINET

Irrigation controller enclosure cabinets shall be constructed and equipment installed in the cabinets in conformance with the details shown on the plans, the provisions of Section 86-3.04A, "Cabinet Construction," of the Standard Specifications, and these special provisions.

Electric service is available and shall be provided to the new controller in accordance with "Electric Service (Irrigation)" of these special provisions.

Irrigation controller enclosure cabinets shall be provided with cross ventilation, roof ventilation or a combination of both. The ventilation shall not compromise the weather resistance properties of the irrigation controller enclosure cabinets and shall be fabricated by the manufacturer.

The anchorage arrangement shall be inside the cabinet as shown on the plans. Dimensions of the cabinet shall be suitable for the equipment to be installed as shown on the plans and specified in these special provisions.

.

Irrigation controller enclosure cabinet dimensions for a single irrigation controller shall be 52 inches (Height) x 18 inches (Width) x 12 inches (Depth).

Irrigation controller enclosure cabinets shall be fabricated in conformance with the provisions in Section 86-3.04A, "Cabinet Construction," of the Standard Specifications.

Irrigation controller enclosure cabinets shall be fabricated of stainless steel.

Inside of the doors shall have provisions for storage of the irrigation plans.

Solid-state automatic shut-off rain sensor units shall be installed for the irrigation controller enclosure cabinets. Rain sensor units shall automatically interrupt the master remote control valves when approximately 1/8 inch of rain has fallen. The irrigation system shall automatically be enabled again when the accumulated rainfall evaporates from the rain sensor unit collection cup. Rain sensor units shall be rated 24 V (ac) to 30 V (ac). Static charge protection shall be included to protect against lightning damage.

Equipment, except for field wiring, shall be installed in the cabinet in a shop prior to field installation.

The contract unit price paid for irrigation controller enclosure cabinet shall include full compensation for furnishing all labor, materials, tools, equipment (including rain sensor units), and incidentals, and for doing all the work involved in fabricating and installing irrigation controller enclosure cabinets, complete in place, including constructing foundations, pads and conduits to pull boxes adjacent to cabinets, and installing equipment within the cabinets, except controllers, as shown on the plans, as specified in the Standard Specifications and these special provisions, and as directed by the Engineer.

21-1.24 IRRIGATION SYSTEMS FUNCTIONAL TEST

Functional tests for the irrigation controllers and associated automatic irrigation systems shall conform to the provisions in Section 20-5.027J, "Testing," of the Standard Specifications and these special provisions.

Tests shall demonstrate to the Engineer, through one complete cycle of the irrigation controllers in the automatic mode that the associated automatic components of the irrigation systems operate properly. If automatic components of the irrigation systems fail a functional test, these components shall be repaired at the Contractor's expense and the testing repeated until satisfactory operation is obtained.

Associated automatic components shall include, but not be limited to, remote control valve actuator systems, remote control valves, and rain sensors.

Upon completion of work on an irrigation system, including correction of deficiencies and satisfactory functional tests for the systems involved, the plants to be planted in the area watered by the irrigation system may be planted provided the planting areas have been prepared as specified in these special provisions.

21-1.25 PLASTIC PIPE

Plastic pipe supply lines must be polyvinyl chloride (PVC) 1120 or 1220 pressure rated pipe with the minimum pressure rating (PR) shown on the plans.

Plastic pipe supply lines less than 3 inches in diameter must have solvent cemented type joints. Primers must be used on the solvent cemented type joints.

Plastic pipe supply lines (main) must have a minimum cover of 1.5 feet.

Plastic pipe (irrigation lines) must be installed not less than 12-inches below the finished grade, measured to the top of the pipe.

Fittings for plastic pipe supply lines with a pressure rating (PR) of 315 must be Schedule 80.

21-1.26 THRUST BLOCK

Thrust blocks shall be installed in accordance with the plans and these special provisions. Thrust blocks shall be installed on the main supply line at all changes in direction and terminus run.

21-1.27 SPRINKLERS

Sprinklers shall conform to the type, pattern, material, and operating characteristics listed in the "Sprinkler Schedule" shown on the plans.

21-1.28 SPRINKLER

Rotor and spray sprinklers shall be plastic, nonadjustable, pressure compensating emitters with automatic flushing action and check valves (where indicated).

21-1.29 BUBBLER

Bubblers shall be furnished and installed as shown on the plans, in conformance with these special provisions and as directed by the Engineer. Deep root-watering devices shall be as shown on the plans.

21-1.30 FINAL IRRIGATION SYSTEM CHECK

A final check of existing and new irrigation facilities shall be performed not more than 40 working days and not less than 30 working days prior to acceptance of the contract.

The length of watering cycles using potable water measured by water meters for the final check of irrigation facilities will be determined by the Engineer.

Remote control valves connected to existing and new irrigation controllers shall be checked for automatic performance when the controllers are in automatic mode.

Unsatisfactory performance of irrigation facilities installed or modified by the Contractor shall be repaired and rechecked at the Contractor's expense until satisfactory performance is obtained, as determined by the Engineer.

Repair or replacement of existing irrigation facilities due to unsatisfactory performance shall conform to the provisions in "Existing Highway Irrigation Facilities" of these special provisions.

Nothing in this section "Final Irrigation System Check" shall relieve the Contractor of full responsibility for making good or repairing defective work or materials found before the formal written acceptance of the entire contract by the Director.

Full compensation for checking the irrigation systems prior to the acceptance of the contract shall be considered as included in the contract lump sum price paid for plant establishment work and no additional compensation will be allowed therefore.

40-2 MATERIALS

40-2.01 CONCRETE

40-2.01A General

Concrete must comply with Section 90, "Portland Cement Concrete."

40-2.01B Aggregate

The specifications for reduction in Operating Range and Contract Compliance for cleanness value and sand equivalent specified under Section 90-2.02A, "Coarse Aggregate," and Section 90-2.02B, "Fine Aggregate," do not apply to concrete pavement.

Combined aggregate gradings must comply with Section 90-3, "Aggregate Gradings," and the difference between the percent passing the 3/8-inch sieve and the percent passing the No. 8 sieve must not be less than 16 percent of the total aggregate.

40-2.01C Cementitious Material

Concrete for concrete pavement must contain from 505 pounds to 675 pounds cementitious material per cubic yard. The specifications for reducing cementitious material content in Section 90-4.05, "Optional Use of Chemical Admixtures," do not apply to concrete pavement.

40-2.01D Mix Proportions

Your laboratory determining mix proportions must determine the minimum cementitious materials content or the maximum water to cementitious materials ratio under California Test 559 and:

1. You must make trial mixtures no more than 24 months before field qualification.
2. Modulus of rupture used to determine the minimum cementitious materials content or maximum water to cementitious materials ratio must be 570 psi at 28 days age and 650 psi at 42 days age.
3. Your laboratory must determine an increase in the cementitious materials content or a decrease in the water to cementitious materials ratio from the trial mixtures to ensure concrete pavement complies with the specifications.

If changing an aggregate supply source or the mix proportions, produce a trial batch and field-qualify the new concrete. The Engineer does not adjust contract time for performing sampling, testing, and qualifying new mix proportions or changing an aggregate supply source.

40-2.01E Field Qualification

Proposed mix proportions must be field qualified before you place concrete pavement. Use an American Concrete Institute (ACI) certified "Concrete Laboratory Technician, Grade I" to perform field qualification tests and calculations.

The Engineer accepts field qualification if five beams made and tested under California Test 523 comply with the following:

1. At a minimum, beams are tested at 10, 21, and 28 days of age
2. At your choice of age not later than 28 days, no single beam's modulus of rupture is less than 550 psi and the average modulus of rupture is at least 570 psi

40-2.02 TIE BARS

Unless specified as smooth, tie bars must be deformed.
Deformed tie bars must be:

1. Deformed steel reinforcing bars under any of the following:

    1.1. ASTM A 615/A 615M, Grade 40 or 60
    1.2. ASTM A 996/A 996M
    1.3. ASTM A 706/A 706M

2. Epoxy-coated under Section 52-1.02B, "Epoxy-coated Reinforcement," and the following:

    2.1. Epoxy-coated tie bars must comply with either ASTM A 775/ A 775M or ASTM A 934/ A 934 M.
    2.2. Epoxy coating under ASTM A 934/ A 934M must be purple or gray.

Smooth tie bars must be:

1. Plain, round, and smooth steel under ASTM A 615/A 615M, Grade 40 or 60
2. Epoxy-coated under Section 52-1.02B, "Epoxy-coated Reinforcement," and the following:

    2.1. Epoxy-coated smooth tie bars must comply with ASTM A 884/A 884M, Class A, Type 1 or Type 2.
    2.2. Epoxy coating under ASTM A 884/A 884 M, Class A, Type 2 must be purple or gray.
    2.3. Bend test does not apply.

Fabricate, sample, and handle epoxy-coated smooth and deformed tie bars at the job site under ASTM D 3963/D 3963M and Section 52-1.02B, "Epoxy-coated Reinforcement."

Do not bend epoxy-coated tie bars.

40-2.03 DOWEL BARS

40-2.03A General

Dowel bars must be:

1. Plain, round, and smooth steel under ASTM A 615/A 615M, Grade 40 or 60
2. Epoxy-coated under Section 52-1.02B, "Epoxy-coated Reinforcement," and the following:

    2.1 Epoxy-coated dowel bars must comply with ASTM A 884/A 884M, Class A, Type 1 or Type 2.
    2.2. Epoxy coating under ASTM A 884/ A 884M, Class A, Type 2 must be purple or gray.
    2.3. Specifications for bend test do not apply.

Fabricate, sample, and handle epoxy-coated dowel bars at the job site under ASTM D 3963/D 3963M and Section 52-1.02B, "Epoxy-coated Reinforcement," except each sample must be 18 inches long. Sample each load delivered to the job site.

40-2.03B Dowel Bar Lubricant

Dowel bar lubricant must be petroleum paraffin-based or curing compound. Paraffin-based lubricant must be Dayton Superior DSC BB-Coat or Valvoline Tectyl 506 or an approved equal and must be factory-applied. Curing compound must be curing compound (3) under Section 90-7.01B, "Curing Compound Method," of the Standard Specifications.

40-2.04 CURING COMPOUND

Curing compound must be curing compound (1) or (2) with white pigment under Section 90-7.01B, "Curing Compound Method."
Reflectance must be at least 60 percent when tested under ASTM E 1347.

40-2.05 CHEMICAL ADHESIVE (DRILL AND BOND)

Chemical adhesive for drilling and bonding dowels and tie bars must be prequalified. A list of prequalified chemical adhesives is available on the Department's Materials Engineering and Testing Services website. The prequalified list indicates the appropriate chemical adhesive system for the concrete temperature and installation conditions.

Each chemical adhesive system must clearly and permanently show the manufacturer's name, model number of the system, manufacturing date, lot number, shelf life or expiration date, and current International Conference of Building Officials (ICBO) Evaluation Report number. Each chemical adhesive carton must include the manufacturer's recommended installation procedures and warning or precautions required by State or Federal laws and regulations.

40-2.06 DOWEL AND TIE BAR BASKETS

Dowel and tie bar baskets must be:

1. Minimum W10 wire size number under ASTM A 82/A 82M
2. Either U-frame or A-frame shape
3. Welded under Section 7.4 of ASTM A 185/A 185M

You may epoxy-coat dowel and tie bar baskets under Section 52-1.02B, "Epoxy-coated Reinforcement," and the following:

1. Epoxy-coated dowel and tie bar baskets must comply with ASTM A 884/A 884M, Class A, Type 1 or Type 2.
2. Epoxy-coating under ASTM A 884/ A 884M, Class A, Type 2 must be purple or gray.

Handle epoxy-coated dowel and tie-bar baskets at the manufacturing plant and job site under ASTM D 3963/D 3963M and Section 52-1.02B, "Epoxy-coated Reinforcement."
Fasteners must be driven fasteners under ASTM F 1667. Fasteners on lean concrete base or asphalt concrete must have a minimum shank diameter of 3/16 inch and a minimum shank length of 2 1/2 inches. For asphalt treated permeable base or cement treated permeable base, the shank diameter must be at least 3/16 inch and the shank length must be at least 5 inches.
Fasteners, clips, and washers must have a minimum 0.2-mil thick zinc coating applied either by electroplating or galvanizing.

40-2.07 BACKER RODS

Backer rods must be Type 1 under ASTM D 5249. Backer rod diameter must be at least 25 percent greater than the sawcut joint width. Backer rod material must be expanded, crosslinked, closed-cell polyethylene foam. No bond or adverse reaction may occur between the backer rod and sealant.

40-2.08 JOINT FILLER MATERIAL

Joint filler for isolation joints must be preformed expansion joint filler for concrete (bituminous type) under ASTM D 994.

40-2.09 HYDRAULIC CEMENT GROUT (NON-SHRINK)

Hydraulic cement grout (non-shrink) must comply with ASTM C 1107/ C 1107M. Use clean, uniform, rounded aggregate filler to extend the grout. Aggregate filler must not exceed 60 percent of the grout mass or the maximum recommended by the manufacturer, whichever is less. Aggregate filler moisture content must not exceed 0.5 percent. Aggregate filler must comply with:

Aggregate Filler Grading

Sieve Size	Percentage Passing
1/2-inch	100
3/8-inch	85 - 100
No. 4	10 - 30
No. 8	0 - 10
No. 16	0 - 5

40-2.10 BAR REINFORCEMENT

Bar reinforcement must comply with Section 52, "Reinforcement."

40-2.11 JOINT SEALANT

40-2.11A General

Do not use hot-pour sealant that will melt the backer rod.

40-2.11B Silicone Joint Sealant

Silicone joint sealant must be low modulus furnished in a one-part silicone formulation. Do not use acid cure sealant. Silicone joint sealant must be compatible with the surface it is applied to and comply with:

Silicone Joint Sealant

Property	Test Method	Specification
Tensile stress, 150% elongation, 7-day cure at 77 °F ± 2 °F and 45% to 55% R.H. [e]	ASTM D 412 (Die C)	45 psi max.
Flow at 77 °F ± °F	ASTM C 639 [a]	Must not flow from channel
Extrusion Rate at 77 °F ± 2 °F	ASTM C 603 [b]	3 to 9 oz/min.
Specific Gravity	ASTM D 792 Method A	1.01 to 1.51
Durometer Hardness, at 0 °F, Shore A, cured 7 days at 77 °F ±2 °F	ASTM C 661	10 to 25
Ozone and Ultraviolet Resistance, after 5,000 hours	ASTM C 793	No chalking, cracking or bond loss
Tack-free at 77 °F ±2 °F and 45% to 55% R.H.[e]	ASTM C 679	Less than 75 minutes
Elongation, 7 day cure at 77 °F ±2 °F and 45% to 55% R.H. [e]	ASTM D 412 (Die C)	500 percent min.
Set to Touch, at 77 °F ±2 °F and 45% to 55% R.H. [e]	ASTM D 1640	Less than 75 minutes
Shelf Life, from date of shipment	—	6 months min.
Bond, to concrete mortar-concrete briquettes, air cured 7 days at 77 °F ±2 °F	AASHTO T 132 [c]	50 psi min.
Movement Capability and Adhesion, 100% extension at 0 °F after, air cured 7 days at 77 °F ±2 °F , and followed by 7 days in water at 77 °F ±2 °F	ASTM C 719[d]	No adhesive or cohesive failure after 5 cycles

Notes:
[a] ASTM C 639 Modified (15 percent slope channel A).
[b] ASTM C 603, through 0.12-inch opening at 50 psi.
[c] Mold briquettes under AASHTO T 132, saw in half and bond with a 0.60-inch maximum thickness of sealant and test under AASHTO T 132. Briquettes must be dried to constant mass at 212 °F ±10 °F.
[d] Prepare 12" x 1" x 3" concrete blocks under ASTM C 719. Use a sawed face for bond surface. Seal 2 inches of block leaving 0.50 inch on each end of specimen unsealed. The depth of sealant must be 0.40 inch and the width 0.50 inch.
[e] R.H. equals relative humidity.

After application, silicone joint sealant must not flow on grades up to 15 percent.

40-2.11C Asphalt Rubber Joint Sealant

Asphalt rubber joint sealant must:

1. Be a mixture of paving asphalt and ground rubber containing not less than 22 percent ground rubber by weight. One hundred percent of ground rubber must pass a No. 8 sieve. Ground rubber must be vulcanized or a combination of vulcanized and devulcanized materials.

2. Comply with ASTM D 6690, Type II except:

    2.1. The cone penetration requirement must not exceed 120 at 77 F, 5 ounces, 5 seconds.
    2.2. The resilience requirement must be a minimum 50 percent recovery when tested at 77 F.

3. Have a Ring and Ball softening point of 135 °F minimum when tested under AASHTO T 53.
4. Be capable of being melted and applied to cracks and joints at temperatures below 400 °F.
5. Not be applied when the concrete pavement surface temperature is below 50 °F.

40-2.11D Preformed Compression Joint Seals

Preformed compression joint seals must comply with ASTM D 2628. Lubricant adhesive used with the seals must comply with ASTM D 2835. Preformed compression joint seals must have 5 or 6 cells, except seals for Type A2 and Type B joints may have 4 cells. Install preformed compression joint seals in compliance with the manufacturer's recommendations. Show evidence that the seals are compressed from 40 to 50 percent for the joint width and depth.

40-2.12 WATER

Water for core drilling must be from a local domestic water supply. Water must not contain:

1. More than 1,000 parts per million of chlorides as CL
2. More than 1,300 parts per million of sulfates as $S0_4$
3. Impurities in a quantity to cause concrete discoloration or surface etching

40-3 CONSTRUCTION

40-3.01 WATER SUPPLY

Before placing concrete pavement, develop enough water supply for the work.

40-3.02 SUBGRADE PREPARATION

Immediately before placing concrete, the subgrade to receive concrete pavement must be:

1. In compliance with the specified compaction and elevation tolerances
2. Free of loose and extraneous material
3. Uniformly moist, but free of standing or flowing water
4. Excavated for thickened parts of concrete pavement end anchors with no disturbed compaction outside the end anchor dimensions

If cement treated permeable base is specified, cover the base surface with asphaltic emulsion before placing concrete pavement. Apply the asphaltic emulsion uniformly at a rate of 0.1 gallons per square yard. Asphaltic emulsion must comply with anionic slow-setting type, SS1h grade in Section 94, "Asphaltic Emulsions." Repair damaged asphaltic emulsion before placing concrete pavement.

40-3.03 PROPORTIONING

Proportion aggregate and bulk cementitious materials under Section 90-5, "Proportioning."

40-3.04 PLACING CONCRETE

40-3.04A General

Place concrete pavement with stationary side forms or slip-form paving equipment.

Place consecutive concrete loads within 30 minutes of each other. Construct a transverse

construction joint when concrete placement is interrupted by more than 30 minutes. The transverse construction joint must coincide with the next contraction joint location, or you must remove fresh concrete pavement to the preceding transverse joint location.

Place concrete pavement in full slab widths separated by construction joints or monolithically in multiples of full lane widths with a longitudinal contraction joint at each traffic lane line.

Do not retemper concrete.

If the concrete pavement surface width is constructed as specified, you may construct concrete pavement sides on a batter not flatter than 6:1 (vertical:horizontal).

40-3.04B Concrete Pavement Widening

If concrete pavement is placed adjacent to existing pavement not constructed as part of the contract, grind the existing concrete pavement lane or shoulder adjacent to the new concrete pavement. Perform the grinding before new concrete pavement is placed. The new concrete pavement must match the elevation of the existing concrete pavement after grinding. Grind existing concrete pavement under Section 42-2, "Grinding," except profile index must comply with the pavement smoothness specifications in Section 40-1.03, "Quality Control and Assurance."

Use paving equipment with padded crawler tracks or rubber-tired wheels on the existing concrete pavement with enough offset to avoid breaking or cracking the existing concrete pavement's edge.

40-3.04C Concrete Pavement Transition Panel

For concrete pavement placed in a transition panel, texture the surface with a drag strip of burlap, a broom, or a spring steel tine device that produces scoring in the finished surface. The scoring must be either parallel with or transverse to the centerline. For the method you choose, texture at the time that produces the coarsest texture.

40-3.04D Stationary Side Form Construction

Stationary side forms must be straight and without defects including warps, bends, and indentations. Side forms must be metal except at end closures and transverse construction joints where other materials may be used.

You may build up side forms by attaching a section to the top or bottom. If attached to the top of metal forms, the attached section must be metal.

The side form's base width must be at least 80 percent of the specified concrete pavement thickness.

Side forms including interlocking connections with adjoining forms must be rigid enough to prevent springing from subgrading and paving equipment and concrete pressure.

Construct subgrade to final grade before placing side forms. Side forms must bear fully on the foundation throughout their length and base width. Place side forms to the specified grade and alignment of the finished concrete pavement's edge. Support side forms during concrete placing, compacting, and finishing.

After subgrade work is complete and immediately before placing concrete, true side forms and set to line and grade for a distance that avoids delays due to form adjustment.

Clean and oil side forms before each use.

Side forms must remain in place for at least 1 day after placing concrete and until the concrete pavement edge no longer requires protection from the forms.

Spread, screed, shape, and consolidate concrete with 1 or more machines. The machine must uniformly distribute and consolidate the concrete. The machines must operate to place the concrete pavement to the specified cross section with minimal hand work.

Consolidate the concrete without segregation. If vibrators are used:

1. The vibration rate must be at least 3,500 cycles per minute for surface vibrators and 5,000 cycles per minute for internal vibrators

2. Amplitude of vibration must cause perceptible concrete surface movement at least 1 foot from the vibrating element
3. Use a calibrated tachometer for measuring frequency of vibration
4. Vibrators must not rest on side forms or new concrete pavement
5. Power to vibrators must automatically cease when forward or backward motion of the paving machine is stopped

Use high-frequency internal vibrators within 15 minutes of depositing concrete on the subgrade to uniformly consolidate the concrete across the paving width including adjacent to forms. Do not use vibrators to shift the mass of concrete.

40-3.04E Slip-Form Construction

If slip-form construction is used, spread, screed, shape, and consolidate concrete to the specified cross section with slip-form machines and minimal hand work. Slip-form paving machines must be equipped with traveling side forms and must not segregate the concrete.

Do not deviate from the specified concrete pavement alignment by more than 0.1 foot.

Slip-form paving machines must use high frequency internal vibrators to consolidate concrete. You may mount vibrators with their axes parallel or normal to the concrete pavement alignment. If mounted with axes parallel to the concrete pavement alignment, space vibrators no more than 2.5 feet measured center to center. If mounted with axes normal to the concrete pavement alignment, space the vibrators with a maximum 0.5-foot lateral clearance between individual vibrators.

Each vibrator must have a vibration rate from 5,000 cycles per minute to 8,000 cycles per minute. The amplitude of vibration must cause perceptible concrete surface movement at least 1 foot from the vibrating element. Use a calibrated tachometer to measure frequency of vibration.

40-3.05 TIE BAR PLACEMENT

Place tie bars:

1. Perpendicular to the longitudinal concrete pavement joint
2. Parallel with the concrete pavement surface at mid-slab depth
3. Not less than 1/2-inch below the saw cut depth of joints
4. With not less than 2 inches clearance from the concrete pavement's surface and bottom
5. With embedment length tolerance of ±2 inches
6. For smooth tie bars, with horizontal and vertical skew not more than 1/2 inch per foot of bar length

Install tie bars at longitudinal joints by 1 of the following methods:

1. Drill concrete and bond tie bars with chemical adhesive in compliance with the manufacturer's instructions. Clean and dry drilled holes before placing chemical adhesive and tie bars. After inserting tie bars into chemical adhesive, support the bars to prevent movement during curing. If the Engineer rejects a tie bar installation, cut the tie bar flush with the joint face and coat the exposed end of the tie bar with chemical adhesive under Section 40-2, "Materials." Offset new holes 3 inches horizontally from the rejected hole's center.
2. Insert tie bars into plastic slip-formed concrete before finishing. Inserted tie bars must have full contact between the bar and the concrete. If tie bars are inserted through the plastic concrete surface, eliminate evidence of the insertion by reworking the concrete over the tie bars.
3. Use threaded tie bar splice couplers fabricated from deformed bar reinforcement free of

external welding or machining.

4. Use tie bar baskets. Anchor baskets at least 200 feet in advance of the concrete placement activity. If you request a waiver, describe the construction limitations or restricted access preventing the advanced anchoring. After the baskets are anchored and before the concrete is placed, cut and remove temporary spacer wires and demonstrate the tie bars do not move from their specified depth and alignment during concrete placement. Use fasteners to anchor tie bar baskets.

If tie bars are not placed correctly, stop paving activities until you demonstrate to the Engineer correction of the cause.

40-3.06 DOWEL BAR PLACEMENT

Center dowel bars within 2 inches in the longitudinal direction on transverse contraction joints or construction joints.

If using curing compound as lubricant, apply the curing compound to dowels in 2 separate applications. Lubricate each dowel bar entirely with bond breaker before placement. The last application must be applied not more than 8 hours before placing the dowel bars. Apply each curing compound application at a rate of 1 gallon per 150 square feet.

If dowel bars are placed by mechanical insertion, eliminate evidence of the insertion by reworking the concrete over the dowel bars. If drilling and bonding dowel bars at construction joints, use a grout retention ring.

If using dowel bar baskets, anchor them with fasteners.

Use at least 10 fasteners for basket sections greater than 12 feet and less than or equal to 16 feet. Baskets must be anchored at least 200 feet in advance of the concrete placement activity unless the Engineer approves your waiver request. If requesting a waiver, describe the construction limitations or restricted access preventing the advanced anchoring. After the baskets are anchored and before the concrete is placed, cut and remove temporary spacer wires and demonstrate the dowel bars do not move from their specified depth and alignment during concrete placement.

Place dowel bars in compliance with:

Dowel Bar Tolerances

Dimension	Tolerance
Horizontal offset	±1 inch
Longitudinal translation	±2 inches
Horizontal skew	3/8 inch, max
Vertical skew	3/8 inch, max
Vertical depth	The minimum distance below the concrete pavement surface must be: DB = d/3 + 1/2 inch where: DB = vertical distance in inches, measured from concrete pavement surface to any point along the top of dowel bar d = concrete pavement thickness in inches The maximum distance below the depth shown on the plans must be 0.05 foot.

If dowel bars are not placed correctly, stop paving activities until you demonstrate to the Engineer correction of the cause.
Remove and replace the concrete pavement 3 feet on either side of a joint with a rejected dowel bar.

40-3.07 BAR REINFORCEMENT

Place bar reinforcement under Section 52, "Reinforcement." Bar reinforcement must be more than 1/2 inch below the saw cut depth at concrete pavement joints.

40-3.08 JOINTS

40-3.08A General

Concrete pavement joints consist of:

1. Longitudinal and transverse construction joints
2. Longitudinal and transverse contraction joints
3. Isolation joints

Construction joints must be normal to the concrete pavement surface.
Until contract acceptance and except for joint filler material, keep joints free of foreign material including soil, gravel, concrete, or asphalt mix.

Volunteer cracks are cracks not coincident with constructed joints.

Repair concrete pavement damaged during joint construction under Section 40-3.17B, "Repair of Spalls, Raveling, and Tearing."

Do not bend tie bars or reinforcement in existing concrete pavement joints.

40-3.08B Construction Joints

Construction joints form where fresh concrete is placed against hardened concrete, existing pavements, or structures.

Before placing concrete at construction joints, apply a curing compound under Section 90-7.01B, "Curing Compound Method," to the vertical surface of existing or hardened concrete and allow it to dry.

Use a metal or wooden bulkhead to form transverse construction joints. If dowel bars are specified, the bulkhead must allow dowel bar installation.

40-3.08C Contraction Joints

In multilane monolithic concrete pavement, use the sawing method to construct longitudinal contraction joints. Construct transverse contraction joints by the sawing method.

Construct transverse contraction joints within 1 foot of their specified spacing. If a slab length of less than 5 feet would be formed, adjust the transverse contraction joint spacing.

Construct transverse contraction joints across the full concrete pavement width regardless of the number or types of longitudinal joints crossed. In areas of converging and diverging pavements, space transverse contraction joints so their alignment is continuous across the full width where converging and diverging pavements are contiguous. Longitudinal contraction joints must be parallel with the concrete pavement centerline. Transverse and longitudinal contraction joints must not deviate by more than 0.1 foot from either side of a 12-foot straight line, except for longitudinal joints parallel to a curving centerline.

40-3.08D Isolation Joints

Construct isolation joints by saw cutting a minimum 1/8-inch width to full concrete pavement depth at the existing concrete pavement's edge and removing the concrete to expose a flat vertical surface. Before placing concrete, secure joint filler material that prevents new concrete from adhering to the existing concrete face.

Dispose of concrete saw cutting residue under Section 7-1.13, "Disposal of Materials Outside the Highway Right of Way."

40-3.08E Sawing Method

The sawing method is cutting a groove in the concrete pavement with a power driven concrete saw. Grooves for longitudinal and transverse contraction joints must be the minimum width possible for the type of saw used. If necessary, the top of the joint must be sawn wider to provide space for joint sealant. Immediately wash slurry from the joint with water under 100 psi maximum pressure.

Saw longitudinal and transverse contraction joints before volunteer cracking occurs and after the concrete is hard enough to saw without spalling, raveling, or tearing.

To keep foreign material out of grooves before joint sealant or compression seal installation, you may use joint filler in sawed contraction joints. Joint filler must not react adversely with the concrete or cause concrete pavement damage. After sawing and washing a joint, install joint filler material that keeps moisture in the adjacent concrete during the 72 hours after paving. If you install joint filler material, the specifications for spraying the sawed joint with additional curing compound under Section 40-3.13, "Curing," do not apply. If using absorptive filler material, moisten the filler immediately before or after installation.

40-3.09 JOINT SEALANT AND COMPRESSION SEAL INSTALLATION

40-3.09A General

At least 7 days after concrete pavement placement and not more than 4 hours before installing joint sealant or compression seal materials, use dry sand blasting and other methods to clean the joint walls of objectionable material such as soil, asphalt, curing compound, paint, and rust. The maximum sand blasting nozzle diameter must be 1/4 inch. The minimum pressure must be 90 psi. Sand blast each side of the joint at least once, in at least 2 separate passes. Hold the nozzle at an angle to the joint from 1 to 2 inches from the concrete pavement. Using a vacuum, collect sand, dust, and loose material at least 2 inches on each side of the joint. Remove surface moisture and dampness at the joints with compressed air that may be moderately hot.

Before you install joint sealant or compression seal, the joint wall must be free of moisture, residue, or film.

If grinding or grooving over or adjacent to sealed joints, remove joint sealant or compression seal materials and dispose of them under Section 7-1.13, "Disposal of Material Outside the Highway Right of Way." After grinding or grooving, replace the joint sealant or compression seal materials.

40-3.09B Liquid Sealant

Do not install liquid sealant in construction joints.

Install backer rods when the concrete pavement temperature is above the air dew point and when the air temperature is at least 40 °F.

Install liquid sealant immediately after installing the backer rod. Install sealant using a mechanical device with a nozzle shaped to introduce the sealant from inside the joint. Extrude sealant evenly and with continuous contact with the joint walls. Recess the sealant surface after placement. Remove excess sealant from the concrete pavement surface.

Do not allow traffic over sealed joints until the sealant is set.

40-3.09C Preformed Compression Seal

Do not install preformed compression seal in construction or isolation joints.

Install longitudinal seals before transverse seals. Longitudinal seals must be continuous except at intersections with transverse seals. Install transverse seals in 1 continuous piece for the entire transverse length of concrete pavement. With a sharp instrument, cut across the longitudinal seal at the intersection with transverse construction joints. If the longitudinal seal does not relax enough to properly install the transverse seal, trim the longitudinal seal to form a tight seal between the 2 joints.

Use a machine specifically designed for preformed compression seal installation. The machine must install the seal:

1. To the specified depth
2. To make continuous contact with the joint walls
3. Without cutting, nicking, or twisting the seal
4. With less than 4 percent stretch

Lay a length of preformed compression seal material cut to the exact length of the pavement joint to be sealed. The Engineer measures this length. After you install the length of preformed compression joint sealant, the Engineer measures the excess amount of material at the joint end. The Engineer divides the excess amount length by the original measured length to determine the percentage of stretch.

40-3.10 SHOULDER RUMBLE STRIP

If specified, construct shoulder rumble strips by rolling or grinding indentations in new concrete pavement.

Select the method and equipment for constructing ground-in indentations.

Do not construct shoulder rumble strips on structures or approach slabs.

Construct rumble strips within 2 inches of the specified alignment. Roller or grinding equipment must be equipped with a sighting device enabling the operator to maintain the rumble strip alignment.

Indentations must not vary from the specified dimensions by more than 1/16 inch in depth or more than 10 percent in length and width.

The Engineer orders grinding or removal and replacement of noncompliant rumble strips to bring them within specified tolerances. Ground surface areas must be neat and uniform in appearance.

The grinding equipment must be equipped with a vacuum attachment to remove residue.

Dispose of removed material under Section 7-1.13, "Disposal of Material Outside the Highway Right of Way."

40-3.11 PRELIMINARY FINISHING

40-3.11A General

Preliminary finishing must produce a smooth and true-to-grade finish. After preliminary finishing, mark each day's concrete pavement with a stamp. The stamp must be approved by the Engineer before paving starts. The stamp must be approximately 1' x 2' in size. The stamp must form a uniform mark from 1/8 to 1/4 inch deep. Locate the mark 20 feet ± 5 feet from the transverse construction joint formed at each day's start of paving and 1 foot ± 0.25 foot from the concrete pavement's outside edge. The stamp mark must show the month, day, and year of placement and the station of the transverse construction joint. Orient the stamp mark so it can be read from the concrete pavement's outside edge.

Do not apply more water to the concrete pavement surface than can evaporate before float finishing and texturing are completed.

Allow enough time to complete finishing activities during daylight. Work may continue after daylight if the Engineer approves lighting you provide.

40-3.11B Stationary Side Form Finishing

If stationary side form construction is used, give the concrete a preliminary finish by the machine float method or the hand method.

If using the machine float method:

1. Use self-propelled machine floats.
2. Determine the number of machine floats required to perform the work at a rate equal to the concrete delivery rate. When the time from concrete placement to machine float finishing exceeds 30 minutes, stop concrete delivery . When machine floats are in proper position, you may resume concrete delivery and paving.
3. Machine floats must run on side forms or adjacent concrete pavement lanes. If running on adjacent concrete pavement, protect the adjacent concrete pavement surface under Section 40-3.15, "Protecting Concrete Pavement."
4. Floats must be hardwood, steel, or steel-shod wood. Floats must be equipped with devices that adjust the under side to a true flat surface.

If using the hand method, finish concrete smooth and true to grade with manually operated floats or powered finishing machines.

40-3.11C Slip-Form Finishing

If slip-form construction is used, the slip-form paver must give the concrete pavement a preliminary finish. You may supplement the slip-form paver with machine floats.

Before the concrete hardens, correct concrete pavement edge slump in excess of 0.02 foot exclusive of edge rounding.

40-3.12 FINAL FINISHING

After completing preliminary finishing, round the edges of the initial paving widths to a 0.04-foot radius. Round transverse and longitudinal construction joints to a 0.02-foot radius.

Before curing, texture the pavement. Perform initial texturing with a burlap drag or broom device that produces striations parallel to the centerline. Perform final texturing with a steel-tined device that produces grooves parallel with the centerline.

Construct longitudinal grooves with a self-propelled machine designed specifically for grooving and texturing concrete pavement. The machine must have tracks to maintain constant speed, provide traction, and maintain accurate tracking along the pavement surface. The machine must have a single row of rectangular spring steel tines. The tines must be from 3/32 to 1/8 inch wide, on 3/4-inch centers, and must have enough length, thickness, and resilience to form grooves approximately 3/16 inch wide. The machine must have horizontal and vertical controls. The machine must apply constant down pressure on the pavement surface during texturing. The machines must not cause ravels.

Construct grooves over the entire pavement width in a single pass except do not construct grooves 3 inches from the concrete pavement edges and longitudinal joints. Final texture must be uniform and smooth. Use a guide to properly align the grooves. Grooves must be parallel and aligned to the pavement edge across the pavement width. Grooves must be from 1/8 to 3/16 inch deep and 3/16 inch wide after concrete has hardened.

For irregular areas and areas inaccessible to the grooving machine, you may hand-construct grooves in compliance with the hand method under Section 40-3.11B, "Stationary Side Form Finishing." Hand-constructed grooves must comply with the specifications for machine-constructed grooves.

Initial and final texturing must produce a coefficient of friction of at least 0.30 when tested under California Test 342. Notify the Engineer when the concrete pavement is scheduled to be opened to traffic. Allow at least 25 days for the Department to test for coefficient of friction from the later of:

1. Seven days after concrete placement
2. When the concrete pavement has attained a modulus of rupture of 550 psi

Do not open the concrete pavement to traffic unless the coefficient of friction is at least 0.30.

Correct concrete pavement not complying with the Engineer's acceptance criteria for coefficient of friction by grooving or grinding under Section 42, "Groove and Grind Pavement."
Do not grind before:

1. Ten days after concrete pavement placement
2. Concrete has developed a modulus of rupture of at least 550 psi

Before opening to traffic, allow at least 25 days for the Department to retest sections for coefficient of friction after corrections are made.

40-3.13 CURING

Cure the concrete pavement's exposed area with waterproof membrane or curing compound (1) or (2) under Section 90-7.01, "Methods of Curing." When side forms are removed within 72 hours of the start of curing, also cure the concrete pavement edges.

If curing compound is used, apply it with mechanical sprayers. Reapply curing compound to sawcuts and disturbed areas.

40-3.14 EARLY USE OF CONCRETE PAVEMENT

If requesting early use of concrete pavement:

1. Furnish molds and machines for modulus of rupture testing
2. Sample concrete
3. Fabricate beam specimens
4. Test for modulus of rupture under California Test 523

When you request early use, concrete pavement must have a modulus of rupture of at least 350 psi. Protect concrete pavement under Section 40-3.15, "Protecting Concrete Pavement."

40-3.15 PROTECTING CONCRETE PAVEMENT

Protect concrete pavement under Section 90-8, "Protecting Concrete."

Maintain the concrete pavement temperature at not less than 40 °F for the initial 72 hours.

Protect the concrete pavement surface from activities that cause damage and reduce texture and coefficient of friction. Do not allow soil, gravel, petroleum products, concrete, or asphalt mixes on the concrete pavement surface.

Construct crossings for traffic convenience. If the Engineer approves your request, you may use Type III portland cement in the concrete for crossings. Do not open crossings until the Department determines by California Test 523 the concrete pavement's modulus of rupture is at least 550 psi.

Do not open concrete pavement to traffic or use equipment on the concrete pavement for 10 days after paving or before the concrete has attained a modulus of rupture of 550 psi except:

1. If the equipment is for sawing contraction joints
2. If the Engineer approves your request, one side of paving equipment's tracks may be on the concrete pavement after a modulus of rupture of 350 psi has been attained, provided:

    2.1. Unit pressure exerted on the concrete pavement by the paver does not exceed 20 psi
    2.2. You change the paving equipment tracks to prevent damage or the paving equipment tracks travel on protective material such as planks
    2.3. No part of the track is closer than 1 foot from the concrete pavement's edge

If concrete pavement damage including visible cracking occurs, stop operating paving equipment on the concrete pavement and repair the damage.

40-3.16 OBTAINING DRILLED CORES

Drill concrete pavement cores under ASTM C 42/ C 42M. Core drilling equipment must use diamond impregnated bits.

Clean, dry, and fill core holes with hydraulic cement grout (non-shrink) or pavement concrete. Coat the core hole walls with epoxy under the specifications for epoxy adhesive for bonding new concrete to old concrete in Section 95, "Epoxy." The backfill must match the adjacent concrete pavement surface elevation and texture.

Do not allow residue from core drilling to fall on traffic, flow across shoulders or lanes occupied by traffic, or flow into drainage facilities including gutters.

40-3.17 REPAIR, REMOVAL, AND REPLACEMENT

40-3.17A General

Working cracks are full-depth cracks essentially parallel to a planned contraction joint beneath which a contraction crack has not formed. If the Engineer orders, take 4-inch nominal diameter cores on designated cracks under Section 40-3.16, "Obtaining Drilled Cores."

40-3.17B Repair of Spalls, Raveling, and Tearing

Before concrete pavement is open to traffic, repair spalls, raveling, and tearing in sawed joints. Make repairs in compliance with the following:

1. Saw a rectangular area with a diamond-impregnated blade at least 2 inches deep.
2. Remove unsound and damaged concrete between the saw cut and the joint and to the saw cut's depth. Do not use a pneumatic hammer heavier than 15 pounds. Do not damage concrete pavement to remain in place.
3. Dispose of removed concrete pavement under Section 7-1.13, "Disposal of Materials Outside the Highway Right of Way."
4. Clean the repair area's exposed surfaces with high pressure abrasive water blasting. Further clean and dry the exposed surfaces with compressed air free of moisture and oil.
5. Apply epoxy as specified for epoxy resin adhesive for bonding new concrete to old concrete under Section 95, "Epoxy." Apply the epoxy with a stiff bristle brush.
6. Apply a portland cement concrete or mortar patch immediately following the epoxy application. Install an insert to prevent bonding of the sides of planned joints.

Repair spalls if they are:

1. Deeper than 0.05 foot
2. Wider than 0.04 foot
3. Longer than 0.3 foot

40-3.17C Route and Seal Working Cracks

Treat working cracks within 0.5 foot of either side of a planned contraction joint in compliance with the following:

1. Route and seal the crack with epoxy resin in compliance with the following:

    1.1. Use a powered rotary router mounted on wheels, with a vertical shaft and a routing spindle that casters as it moves along the crack
    1.2. Form a reservoir 3/4 inch deep by 3/8 inch wide in the crack
    1.3. Use equipment that does not cause raveling or spalling
    1.4. Place liquid sealant

2. Treat the contraction joint adjacent to the working crack in compliance with the following:

    2.1. Use epoxy resin under ASTM C 881/C 881M, Type IV, Grade 2 for Type B joints and secondary saw cuts for Type A1 and Type A2 joints
    2.2. Pressure inject epoxy resin under ASTM C 881/C881M, Type IV, Grade 1 for narrow saw cuts including initial saw cuts for Type A1 and Type A2 joints

If a working crack intersects a contraction joint, route and seal the working crack and seal the contraction joint as specified for installing liquid sealant under Section 40-3.09, "Joint Seal and Joint Sealant Installation."

40-3.17D Removal and Replacement of Slabs

As specified, remove and replace slabs or partial slabs for:

1. Insufficient thickness
2. Dowel bar misalignment
3. Working cracks more than 0.5 foot from a planned contraction joint

40-4 MEASUREMENT AND PAYMENT

40-4.01 MEASUREMENT

The contract item for concrete pavement as designated in the Verified Bid Item List is measured by the cubic yard. The Engineer calculates the pay quantity volume based on the plan dimensions. The Engineer does not measure concrete pavement placed outside those dimensions unless it was ordered by the Engineer.

The contract items for sealing joints as designated in the Verified Bid Item List are measured by the linear foot.

The contract item for shoulder rumble strips is measured by the station along each shoulder on which the rumble strips are constructed without deductions for gaps between indentations.

40-4.02 PAYMENT

The contract price paid per cubic yard for concrete pavement as designated in the Verified Bid Item List includes full compensation for furnishing all labor, materials, tools, equipment, and incidentals, and for doing all the work involved in constructing the concrete pavement, complete in place including bar reinforcement, tie bars, dowel bars, anchors, and fasteners, as shown on the plans and as specified in these specifications and the special provisions, and as directed by the Engineer.

The Engineer adjusts payment for each primary area deficient in average thickness in compliance with the following:

Pay Adjustments for Deficient Thickness

Average Thickness Deficiency (foot)	Deficiency Adjustment ($/yd^2)
0.01	0.90
0.02	2.30
0.03	4.10
0.04	6.40
0.05	9.11

If the average thickness deficiency is less than 0.01 foot, the Engineer does not adjust payment for thickness deficiency. If the average thickness deficiency is more than 0.01 foot, the Engineer rounds to the nearest 0.01 foot and uses the adjustment table.

Full compensation for core drilling and backfilling the cores ordered by the Engineer for measuring concrete pavement thickness and determining full-depth cracks is included in the contract price paid per cubic yard for concrete pavement as designated in the Engineer's Estimate and no additional compensation will be allowed therefor. The Department does not pay for additional concrete pavement thickness measurements requested by the Contractor.

The Department does not pay for the portion of concrete that penetrates treated permeable base.

Full compensation for the quality control plan is included in the contract price paid per cubic yard for concrete pavement as designated in the Verified Bid Item List and no separate payment will be made therefor.

Full compensation for furnishing and applying asphaltic emulsion on cement treated permeable base is included in the contract price paid per cubic yard for concrete pavement as designated in the Engineer's Estimate and no separate payment will be made therefor.

Full compensation for repairing joints is included in the contract price paid per cubic yard for concrete pavement as designated in the Verified Bid Item List and no separate payment will be made therefor.

Full compensation for furnishing, calibrating, and operating profilograph equipment for Profile Index, for submitting profilograms, and for performing corrective work is included in the contract price paid per cubic yard for concrete pavement as designated in the Verified Bid Item List and no separate payment will be made therefor.

Full compensation for grooving and grinding for final finishing is included in the contract price paid per cubic yard for concrete pavement as designated in the Verified Bid Item List and no separate payment will be made therefor.

Full compensation for removing and replacing joint material for grooving and grinding is included in the contract price per cubic yard for concrete pavement as designated in the Verified Bid Item List and no separate payment will be made therefor.

Full compensation for removing and replacing slabs is included in the contract price paid per cubic yard for concrete pavement as designated in the Verified Bid Item List and no separate payment will be made therefor.

Full compensation for drilling holes and bonding tie bars with chemical adhesive is included in the contract price paid per cubic yard for concrete pavement as designated in the Verified Bid Item List and no additional compensation will be allowed therefor.

Full compensation for repairing damage caused by operating paving equipment on new concrete pavement is included in the contract price paid per cubic yard for concrete pavement as designated in the Verified Bid Item List and no separate payment will be made therefor.

The material and work necessary for the construction of crossings for public convenience, and their subsequent removal and disposal, will be paid for at the contract prices for the items of work involved and if there are no contract items for the work involved, payment for concrete pavement crossings will be made by extra work as specified in Section 4-1.03D, "Extra Work."

The Department will reduce payments to the Contractor by $56.12 per square yard for concrete pavement slabs allowed to remain in place represented by cores indicating dowel bars placed with their centers from ±2 inches to ±3 inches from the saw cut of a transverse contraction joint

The Engineer will calculate the reduced payment using the slab dimensions adjacent to and inclusive of the joints with misplaced dowel bars. This reduced payment is in addition to other specified payment reductions.

The Department will reduce payments to the Contractor by $59.56 per square yard for concrete pavement allowed to remain in place represented by cores indicating either of the following:

1. Tie bars placed outside their specified placement and position tolerances
2. Bar reinforcement placed outside their specified placement and position tolerances

The Engineer will calculate the reduced payment using the slab dimensions adjacent to and inclusive of the joints with misplaced tie bars. This reduced payment is in addition to other specified payment reductions.

Full compensation for core drilling for checking dowel or tie bar alignment and backfilling the cores is included in the contract price paid per cubic yard for concrete pavement as designated in the Engineer's Estimate and no additional compensation will be allowed therefor.

If the initial cores show that dowel bars or tie bars are out of tolerance for alignment and the Engineer orders additional dowel or tie bar coring, full compensation for drilling the additional cores is included in the contract price paid per cubic yard for concrete pavement as designated in the Verified Bid Item List and no additional compensation will be allowed therefor.

If the initial cores show that dowel bars or tie bars are within alignment tolerances and the Engineer orders more dowel or tie bar coring, the additional cores will be paid for as extra work as specified in Section 4-1.03D, "Extra Work."

The Department will not pay for additional coring to check dowel or tie bar alignment you request.

Full compensation for performing profilograph tests, furnishing the profilograms and electronic files to the Engineer, and for performing corrective work is included in the contract price paid per cubic yard for the type of concrete pavement as designated in the Verified Bid Item List and no additional compensation will be allowed therefor.

The contract prices paid per linear foot for seal pavement joint, seal isolation joint, and seal longitudinal isolation joint include full compensation for furnishing all labor, materials, tools, equipment, and incidentals, and for doing all the work involved in sealing pavement joints and sealing isolation joints, complete in place, as shown on the plans, and as specified in these specifications and the special provisions, and as directed by the Engineer.

The contract price paid per station for shoulder rumble strip includes full compensation for furnishing all labor, materials, tools, equipment and incidentals, and for doing all the work involved in constructing the rumble strip complete in place, as shown on the plans, as specified in these Standard Specifications and as directed by the Engineer.

SECTION 51 CONCRETE STRUCTURES
(Issued 07-30-10)

In Section 51-1.05 in the 11th paragraph, replace the 1st sentence with:

Form panels for exposed surfaces shall be furnished and placed in uniform widths of not less than 3 feet and in uniform lengths of not less than 6 feet, except at the end of continuously formed surfaces where the final panel length required is less than 6 feet.

In Section 51-1.06C in the 11th paragraph, replace the 1st sentence with:

Falsework for box culverts and other structures with decks lower than the roadway pavement and with span lengths of 14 feet or less shall not be released until the last placed concrete has attained a compressive strength of 1,600 psi, provided that curing of the concrete is not interrupted.

In Section 51-1.11 replace the 6th paragraph with:

Construction methods and equipment employed by the Contractor shall conform to the provisions in Section 7-1.02, "Load Limitations."

In Section 51-1.12D replace the 4th paragraph with:

Expanded polystyrene shall be a commercially available polystyrene board. Expanded polystyrene shall have a minimum flexural strength of 35 psi determined in conformance with the requirements in ASTM Designation: C 203 and a compressive yield strength of between 16 and 40 psi at 5 percent compression. Surfaces of expanded polystyrene against which concrete is placed shall be faced with hardboard. Hardboard shall be 1/8 inch minimum thickness, conforming to ANSI A135.4, any class. Other facing materials may be used provided they furnish equivalent protection. Boards shall be held in place by nails, waterproof adhesive, or other means approved by the Engineer.

In Section 51-1.12F replace the 3rd paragraph with:

Type A and AL joint seals shall consist of a groove in the concrete that is filled with field-mixed silicone sealant.

In Section 51-1.12F in the 6th paragraph, replace the table with:

Movement Rating (MR)	Seal Type
MR ≤ 1 inch	Type A or Type B
1 inch < MR ≤ 2 inches	Type B
2 inches < MR ≤ 4 inches	Joint Seal Assembly (Strip Seal)
MR > 4 inches	Joint Seal Assembly (Modular Unit) or Seismic Joint

In Section 51-1.12F(3)(a) replace the 1st and 2nd paragraphs with:

The sealant must consist of a 2-component silicone sealant that will withstand up to ±50 percent movement.

Silicone sealants must be tested under California Test 435 and must comply with the following:

Specification	Requirement
Modulus at 150 percent elongation	8-75 psi
Recovery	21/32 inch max.
Notch Test	Notched or loss of bond 1/4 inch, max.
Water Resistance	Notched or loss of bond 1/4 inch, max.
Ultraviolet Exposure ASTM Designation: G 154, Table X2.1,Cycle 2.	No more than slight checking or cracking.
Cone Penetration	4.5-12.0 mm

In Section 51-1.12F(3)(a) delete the 3rd and 8th paragraphs.

In Section 51-1.12F(3)(a) replace the 10th paragraph with:

A Certificate of Compliance accompanied by a certified test report must be furnished for each batch of silicone sealant in conformance with the provisions in Section 6-1.07, "Certificates of Compliance."

In Section 51-1.12F(3)(b) replace the 2nd paragraph with:

The preformed elastomeric joint seal must conform to the requirements in ASTM D 2628 and the following:

1. The seal must consist of a multichannel, nonporous, homogeneous material furnished in a finished extruded form.
2. The minimum depth of the seal measured at the contact surface must be at least 95 percent of the minimum uncompressed width of the seal as designated by the manufacturer.
3. When tested in conformance with the requirements in California Test 673 for Type B seals, joint seals must provide a movement rating (MR) of not less than that shown on the plans.
4. The top and bottom edges of the joint seal must maintain continuous contact with the sides of the groove over the entire range of joint movement.
5. The seal must be furnished full length for each joint with no more than 1 shop splice in any 60-foot length of seal.
6. The Contractor must demonstrate the adequacy of the procedures to be used in the work before installing seals in the joints.
7. One field splice per joint may be made at locations and by methods approved by the Engineer. The seals are to be manufactured full length for the intended joint, then cut at the approved splice section and rematched before splicing. The Contractor must submit splicing details prepared by the joint seal manufacturer for approval before beginning splicing work.
8. Shop splices and field splices must have no visible offset of exterior surfaces and must show no evidence of bond failure.
9. At all open ends of the seal that would admit water or debris, each cell must be filled to a depth of 3 inches with commercial quality open cell polyurethane foam or closed by other means subject to approval by the Engineer.

In Section 51-1.12F(3)(b) replace the 7th paragraph with:

The joint seal must be installed full length for each joint with equipment that does not twist or distort the seal, elongate the seal longitudinally, or otherwise cause damage to the seal or to the concrete forming the groove.

In Section 51-1.12F(3)(b) in the 11th paragraph, replace the 1st sentence with:

Samples of the prefabricated joint seals, not less than 3 feet in length, will be taken by the Engineer from each lot of material.

In Section 51-1.12H(1) in the 6th paragraph, replace the 4th and 5th sentences with:

Each ply of fabric shall have a breaking strength of not less than 800 pounds per inch of width in each thread direction when 3" x 36" samples are tested on split drum grips. The bond between double plies shall have a minimum peel strength of 20 pounds per inch.

In Section 51-1.12H(1) in the 8th paragraph in the table, replace the hardness (Type A) requirements with:

Hardness (Type A)	D 2240 with 2kg mass.	55 ±5

In Section 51-1.12H(2) in the 1st paragraph in item A, replace the 1st and 2nd sentences with:

The bearings shall consist of alternating steel laminates and internal elastomer laminates with top and bottom elastomer covers. Steel laminates shall have a nominal thickness of 0.075 inch (14 gage).

In Section 51-1.13 replace the 2nd, 3rd, and 4th paragraphs with:

Surfaces of fresh concrete at horizontal construction joints shall be thoroughly consolidated without completely removing surface irregularities. Additionally, surfaces of fresh concrete at horizontal construction joints between girder stems and decks shall be roughened to at least a 1/4-inch amplitude.

Construction joint surfaces shall be cleaned of surface laitance, curing compound, and other foreign materials using abrasive blast methods before fresh concrete is placed against the joint surface.

Construction joint surfaces shall be flushed with water and allowed to dry to a surface dry condition immediately before placing concrete.

In Section 51-1.135 replace the 1st paragraph with:

Mortar shall be composed of cementitious material, sand, and water proportioned and mixed as specified in this Section 51-1.135.

In Section 51-1.135 replace the 3rd paragraph with:

The proportion of cementitious material to sand, measured by volume, shall be 1 to 2 unless otherwise specified.

In Section 51-1.17 in 4th paragraph, replace the 3rd sentence with:

The surfaces shall have a profile trace showing no high points in excess of 0.25 inch, and the portions of the surfaces within the traveled way shall have a profile count of 5 or less in any 100 foot section.

ADD:

51-1.17A Deck Crack Treatment

The Contractor shall use all means necessary to minimize the development of shrinkage cracks.

The Contractor shall remove all equipment and materials from the deck and clean the surface as necessary for the Engineer to measure the surface crack intensity. Surface crack intensity will be determined by the Engineer after completion of concrete cure, before prestressing, and before the release of falsework. In any 500 square foot portion of deck within the limits of the new concrete deck, should the intensity of cracking be such that there are more than 50 feet of cracks whose width at any location exceeds 0.02 inch, the deck shall be treated with a high molecular weight methacrylate (HMWM) resin system. The area of deck to be treated shall have a width that extends for the entire width of new deck inside the concrete barriers and a length that extends at least 5 feet beyond the furthest single continuous crack outside the 500 square foot portion, measured from where that crack exceeds 0.02 inch in width, as determined by the Engineer.

111178*---9+6.

Deck crack treatment shall include furnishing, testing, and applying the HMWM resin system, with sand and absorbent material. If grinding is required, deck crack treatment shall take place before grinding.

51-1.17A(1) Submittals

Submit a HMWM resin system placement plan. When HMWM resin is to be applied within 100 feet of a residence, business, or public space including sidewalks under a structure, also submit a public safety plan. Submit plans under Section 5-1.02, "Plans and Working Drawings," of the Standard Specifications. The review time is 15 days.

The HMWM resin system placement plan must include:

1. Schedule of work and testing for each bridge
2. Description of equipment for applying HMWM resin
3. Range of gel time and final cure time for HMWM resin
4. Absorbent material to be used
5. Description of equipment for applying and removing excess sand and absorbent material
6. Procedure for removing HMWM resin from the deck, including equipment
7. Storage and handling of HMWM resin components and absorbent material
8. Disposal of excess HMWM resin and containers

The public safety plan must include:

1. A public notification letter with a list of delivery and posting addresses. The letter must state HMWM resin work locations, dates, times, and what to expect. Deliver the letter to residences and businesses within 100 feet of HMWM resin work locations and to local fire and police officials at least 7 days before starting work. Post the letter at the job site.
2. An airborne emissions monitoring plan prepared and executed by a certified industrial hygienist (CIH) certified in comprehensive practice by the American Board of Industrial Hygiene. The plan must have at least 4 monitoring points including the mixing point, application point, and point of nearest public contact. Monitor airborne emissions during HMWM resin work and submit emissions monitoring results after completing the work.
3. An action plan for protection of the public when airborne emissions levels exceed permissible levels.
4. A copy of the CIH's certification.

If the measures proposed in the safety plan are inadequate to provide for public safety associated with the use of HMWM resin, the Engineer will reject the plan and direct the Contractor to revise the plan. Directions for revisions will be in writing and include detailed comments. The Engineer will notify the Contractor of the approval or rejection of a submitted or revised plan within 15 days of receipt of that plan.

51-1.17A(2) Quality Control and Assurance

Submit samples of HMWM resin components 15 days before use under Section 6-3, "Testing," of the Standard Specifications. Notify the Engineer 15 days before delivery of HMWM resin components in containers over 55 gallons to the job site.

Complete a test area before starting work. Results from airborne emissions monitoring of the test area must be submitted to the Engineer before starting production work.

The test area must:

1. Be approximately 500 square feet
2. Be placed within the project limits outside the traveled way at an approved location
3. Be constructed using the same equipment as the production work
4. Replicate field conditions for the production work
5. Demonstrate proposed means and methods meet the acceptance criteria
6. Demonstrate production work will be completed within the time allowed
7. Demonstrate suitability of the airborne emissions monitoring plan

The test area will be acceptable if:

1. The treated deck surface is tack free and non-oily
2. The sand cover adheres and resists brushing by hand
3. Excess sand and absorbent material has been removed
4. The coefficient of friction is at least 0.35 when tested under California Test 342

51-1.17A(3) Materials

HMWM resin system consists of a resin, promoter, and initiator. HMWM resin must be low odor and comply with the following:

HMWM Resin

Property	Requirement	Test Method
Volatile Content*	30 percent, maximum	ASTM D 2369
Viscosity *	25 cP, maximum, (Brookfield RVT with UL adaptor, 50 RPM at 77°F)	ASTM D 2196
Specific Gravity *	0.90 minimum, at 77°F	ASTM D 1475
Flash Point *	180°F, minimum	ASTM D 3278
Vapor Pressure *	1.0 mm Hg, maximum, at 77°F	ASTM D 323
Tack-free Time	400 minutes, maximum, at 25°C	Specimens prepared per California Test 551
PCC Saturated Surface-Dry Bond Strength	3.5 MPa, minimum at 24 hours and 21 ± 1°C	California Test 551

* Test must be performed before adding initiator.

Sand for abrasive sand finish must:

1. Be commercial quality dry blast sand
2. Have at least 95 percent pass the No. 8 sieve and at least 95 percent retained on the No. 20 sieve when tested under California Test 205

Absorbent material must be diatomaceous earth, abrasive blast dust, or substitute recommended by the HMWM resin supplier and approved by the Engineer.

51-1.17A(4) Construction

HMWM resin system applied by machine must be:

1. Combined in volumetric streams of promoted resin to initiated resin by static in-line mixers
2. Applied without atomization

HMWM resin system may be applied manually. Limit the quantity of resin mixed for manual application to 5 gallons at a time.

Prepare the area to be treated by abrasive blasting. Curing compound, surface contaminants, and foreign material must be removed from the bridge deck surface. Sweep the deck surface clean after abrasive blasting and blow loose material from cracks using high-pressure air.

The deck surface must be dry when abrasive blast cleaning is performed. When abrasive blast cleaning within 10 feet of public traffic, remove dust and residue from abrasive blast cleaning using a vacuum attachment operating concurrently with blasting equipment . If the deck surface becomes

contaminated before placing HMWM, abrasive blast clean the contaminated area and sweep the deck clean.

The deck must be dry before applying HMWM resin. The concrete surface must be at least 50 degrees F and at most 100 degrees F. Relative humidity must be expected to be at most 85 percent during the work shift.

Thoroughly mix all components of the HMWM resin system. Apply HMWM resin to the deck surface within 5 minutes of mixing at approximately 90 sq ft per gallon. The Engineer determines the exact application rate. The resin gel time must be between 40 and 90 minutes. HMWM resin that thickens during application is rejected.

Spread the HMWM resin system uniformly. Completely cover surfaces to be treated and fill all cracks. Redistribute excess resin using squeegees or brooms within 10 minutes of application. For textured or grooved deck surfaces, excess resin must be removed from the texture indentations.

Apply the abrasive sand finish of at least 2 pounds per square yard or until saturation as determined by the Engineer no sooner than 20 minutes after applying resin. Apply absorbent material before opening lane to traffic. Remove excess sand and absorbent material by vacuuming or power sweeping.

Traffic or equipment will be allowed on the overlay after the Engineer has determined:

1. The treated deck surface is tack free and non-oily
2. The sand cover adheres and resists brushing by hand
3. Excess sand and absorbent material has been removed
4. No material will be tracked beyond limits of treatment by traffic

In Section 51-1.18C replace the 2nd paragraph with:

When Class 2 surface finish (gun finish) is specified, ordinary surface finish shall first be completed. The concrete surfaces shall then be abrasive blasted to a rough texture and thoroughly washed down with water. While the washed surfaces are damp, but not wet, a finish coating of machine applied mortar, approximately 1/4 inch thick, shall be applied in not less than 2 passes. The coating shall be pneumatically applied and shall consist of either (1) sand, cementitious material, and water mechanically mixed prior to its introduction to the nozzle, or (2) premixed sand and cementitious material to which water is added prior to its expulsion from the nozzle. The use of admixtures shall be subject to the approval of the Engineer as provided in Section 90, "Portland Cement Concrete." Unless otherwise specified, supplementary cementitious materials will not be required. The proportion of cementitious material to sand shall be not less than one to 4, unless otherwise directed by the Engineer. Sand shall be of a grading suitable for the purpose intended. The machines shall be operated and the coating shall be applied in conformance with standard practice. The coating shall be firmly bonded to the concrete surfaces on which it is applied.

In Section 51-1.18C replace the 5th paragraph with:

When surfaces to be finished are in pedestrian undercrossings, the sand shall be silica sand and the cementitious material shall be standard white portland cement.

In Section 51-1.23, add:

Full compensation for deck crack treatment, including the public safety plan, shall be considered as included in the contract price paid per cubic yard for structural concrete, bridge, and no additional compensation will be allowed therefor.

SECTION 52 REINFORCEMENT
(Issued 06-05-09)

In Section 52-1.02(B) between the 3rd and 4th paragraphs, add:

The epoxy powder coating shall be selected from the Department's Pre-Qualified Products List.

In Section 52-1.02(B) replace the 14th paragraph with:

Except for lap splices, splices for epoxy-coated reinforcement shall be coated with a corrosion protection covering that is selected from the Department's Pre-Qualified Products List. The covering shall be installed in accordance with the manufacturer's recommendations.

In Section 52-1.07 in the 11th paragraph, replace the table with:

Height Zone (H) (Feet above ground)	Wind Pressure Value (psf)
$H \leq 30$	20
$30 < H \leq 50$	25
$50 < H \leq 100$	30
$H > 100$	35

In Section 52-1.08B(1) replace the 1st paragraph with:

Mechanical splices to be used in the work shall be selected from the Department's Pre-Qualified Products List.

In Section 52-1.08B(1) in the 2nd paragraph, replace the table with:

Reinforcing Bar Number	Total Slip
4	0.020-inch
5	0.020-inch
6	0.020-inch
7	0.028-inch
8	0.028-inch
9	0.028-inch
10	0.036-inch
11	0.036-inch
14	0.048-inch
18	0.060-inch

In Section 52-1.08B(1), in the 6th paragraph, delete item C.

In Section 52-1.08B(2) in the 6th paragraph, replace the subparagraph with:

The minimum preheat and interpass temperatures shall be 400º F for Grade 40 bars and 600º F for Grade 60 bars. Immediately after completing the welding, at least 6 inches of the bar on each side of the splice shall be covered by an insulated wrapping to control the rate of cooling. The insulated wrapping shall remain in place until the bar has cooled below 200º F.

Replace Section 52-1.08B(3) with:

52-1.08B(3) Resistance Butt Welds

Shop produced resistance butt welds shall be produced by a fabricator who is selected from the Department's Pre-Qualified Products List.

A Certificate of Compliance conforming to the provisions in Section 6-1.07, "Certificates of Compliance," shall be furnished for each shipment of splice material. The Certificate of Compliance shall include heat number, lot number and mill certificates.

In Section 52-1.08C replace the 3rd paragraph with:

Testing on prequalification and production sample splices shall be performed at an approved independent testing laboratory. The laboratory shall not be employed or compensated by any subcontractor, or by other persons or entities hired by subcontractors who will provide other services or materials for the project.

The independent testing laboratory shall be selected from the Department's Pre-Qualified Products List.

In Section 52-1.08C replace the 5th paragraph with:

Prequalification and production sample splices and testing shall conform to California Test 670 and these specifications.

In Section 52-1.08C delete the 6th paragraph.

In Section 52-1.08C replace the 8th paragraph with:

Each sample splice, as defined herein, shall be identified as representing either a prequalification or production test sample splice.

In Section 52-1.08C in the 10th paragraph, delete the last sentence.

Replace Section 52-1.08C(1) with:

52-1.08C(1) Splice Prequalification Report

Before using any service splices or ultimate butt splices in the work, the Contractor shall submit a Splice Prequalification Report. The report shall include the following:

A. A copy of the manufacturer's product literature giving complete data on the splice material and installation procedures.
B. Names of the operators who will be performing the splicing.
C. Descriptions of the positions, locations, equipment, and procedures that will be used in the work.
D. Certifications from the fabricator for prequalification of operators and procedures based on sample tests performed no more than 2 years before submitting the report. Each operator shall be certified by performing 2 sample splices for each bar size of each splice type that the operator will be performing in the work. For deformation-dependent types of splice devices, each operator shall be certified by performing 2 additional samples for each bar size and deformation pattern that will be used in the work.

Prequalification sample splices shall be tested by an approved independent testing laboratory and shall conform to the appropriate production test criteria and slip requirements specified herein. When epoxy-coated reinforcement is required, resistance butt welded sample splices shall have the weld flash removed by the same procedure as will be used in the work, before coating and testing. The

Splice Prequalification Report shall include the certified test results for all prequalification sample splices.

The QCM shall review and approve the Splice Prequalification Report before submitting it to the Engineer for approval. The Contractor shall allow 2 weeks for the review and approval of a complete report before performing any service splicing or ultimate butt splicing in the work.

In Section 52-1.08C(2)(a) replace the 1st, 2nd, 3rd, 4th, and 5th paragraphs with:

Production tests shall be performed by an approved independent testing laboratory for all service splices used in the work. A production test shall consist of testing 4 sample splices prepared for each lot of completed splices. The samples shall be prepared by the Contractor using the same splice material, position, operators, location, and equipment, and following the same procedure as used in the work.

At least one week before testing, the Contractor shall notify the Engineer in writing of the date and location where the testing of the samples will be performed.

The 4 samples from each production test shall be securely bundled together and identified with a completed sample identification card before shipment to the approved independent testing laboratory. The card will be furnished by the Engineer. Bundles of samples containing fewer than 4 samples of splices shall not be tested.

Before performing any tensile tests on production test sample splices, one of the 4 samples shall be tested for, and shall conform to, the requirements for total slip in Section 52-1.08B(1), "Mechanical Splices." Should this sample not meet the total slip requirements, one retest, in which the 3 remaining samples are tested for total slip, will be allowed. Should any of the 3 remaining samples not conform to the total slip requirements, all splices in the lot represented by this production test will be rejected.

If 3 or more sample splices from a production test conform to the provisions in this Section 52-1.08C(2), "Service Splice Test Criteria," all splices in the lot represented by this production test will be considered acceptable.

Replace Section 52-1.08C(2)(b) with:

52-1.08C(2)(b) Quality Assurance Test Requirements for Service Splices

In addition to the required production tests, the Contractor shall concurrently prepare 4 service quality assurance sample splices for:

A. The first production test performed.
B. One of every 5 subsequent production tests, or fraction thereof, randomly selected by the Engineer.

These service quality assurance sample splices shall be prepared in the same manner as specified herein for service production sample splices.

The service quality assurance sample splices shall be shipped to the Transportation Laboratory for quality assurance testing. Each set of 4 sample splices shall be securely bundled together and identified by location and contract number with weatherproof markings before shipment. Bundles containing fewer than 4 samples of splices will not be tested. Sample splices not accompanied by the supporting documentation required in Section 52-1.08B(1), "Mechanical Splices," for mechanical splices, or in Section 52-1.08B(3), "Resistance Butt Welds," for resistance butt welds, will not be tested.

Quality assurance testing will be performed in conformance with the requirements for service production sample splices in Section 52-1.08C(2)(a), "Production Test Requirements for Service Splices."

Replace Section 52-1.08C(3) with:

52-1.08C(3) Ultimate Butt Splice Test Criteria

Ultimate production and quality assurance sample splices shall be tensile tested in conformance with the requirements described in ASTM Designation: A 370 and California Test 670.

Each sample splice shall be identified as representing a prequalification, production, or quality assurance sample splice.

The portion of hoop reinforcing bar, removed to obtain a sample splice, shall be replaced using a prequalified ultimate mechanical butt splice, or the hoop shall be replaced in kind.

Reinforcing bars, other than hoops, from which sample splices are removed, shall be repaired using ultimate mechanical butt splices conforming to the provisions in Section 52-1.08C(1), "Splice Prequalification Report," or the bars shall be replaced in kind. These bars shall be repaired or replaced such that no splices are located in any "No Splice Zone" shown on the plans.

Ultimate production and quality assurance sample splices shall rupture either: 1) in the reinforcing bar but outside of the affected zone, provided that the sample splice has visible necking or 2) anywhere, provided that the sample splice has achieved the strain requirement for necking.

When tested in conformance with the requirements in California Test 670, "Necking (Option I)," the visible necking shall be such that there is a visible decrease in the sample's cross-sectional area at the point of rupture.

When tested in conformance with the requirements in California Test 670, "Necking (Option II)," the strain requirement for necking shall be such that the largest measured strain is not less than 6 percent for No. 11 and larger bars, or not less than 9 percent for No. 10 and smaller bars.

The affected zone is the portion of the reinforcing bar where any properties of the bar, including the physical, metallurgical, or material characteristics, have been altered by fabrication or installation of the splice. The weld and one inch adjacent to the weld will be considered part of the affected zone.

In Section 52-1.08C(3)(a) replace the 1st paragraph with:

Production tests shall be performed for all ultimate butt splices used in the work. A production test shall consist of testing 4 sample splices removed from each lot of completed splices.

In Section 52-1.08C(3)(a) replace the 3rd paragraph with:

After notification has been received, the Engineer will randomly select the 4 sample splices to be removed from the lot and place tamper-proof markings or seals on them. These ultimate production sample splices shall be removed by the Contractor, and tested by an approved independent testing laboratory.

In Section 52-1.08(C)(3)(a) replace the 5th, 6th, and 7th paragraphs with:

A sample splice will be rejected if a tamper-proof marking or seal is disturbed before testing.

The 4 sample splices from each production test shall be securely bundled together and identified with a completed sample identification card before shipment to the approved independent testing laboratory. The card will be furnished by the Engineer. Bundles of samples containing fewer than 4 sample splices shall not be tested.

Before performing any tensile tests on production test sample splices, one of the 4 sample splices shall be tested for, and shall conform to, the requirements for total slip in Section 52-1.08B(1), "Mechanical Splices." Should this sample splice not meet these requirements, one retest, in which the 3 remaining sample splices are tested for total slip, will be allowed. Should any of the 3 remaining sample splices not conform to these requirements, all splices in the lot represented by this production test will be rejected.

Replace Section 52-1.08C(3)(b) with:

52-1.08C(3)(b) Quality Assurance Test Requirements for Ultimate Butt Splices

In addition to the required production tests, the Contractor shall concurrently prepare 4 ultimate quality assurance sample splices for:

A. The first production test performed.
B. One of every 5 subsequent production tests, or fraction thereof, randomly selected by the Engineer.

These ultimate quality assurance sample splices shall be prepared in the same manner as specified herein for ultimate production sample splices.

The ultimate quality assurance sample splices shall be shipped to the Transportation Laboratory for quality assurance testing. Each set of 4 sample splices shall be securely bundled together and identified by location and contract number with weatherproof markings before shipment. Bundles containing fewer than 4 samples of splices will not be tested. Sample splices not accompanied by the supporting documentation required in Section 52-1.08B(1), "Mechanical Splices," for mechanical splices, or in Section 52-1.08B(3), "Resistance Butt Welds," for resistance butt welds, will not be tested.

Quality assurance testing will be performed in conformance with the requirements for ultimate production sample splices in Section 52-1.08C(3)(a), "Production Test Requirements for Ultimate Butt Splices."

Replace Section 52-1.08D with:

A Production Test Report for all testing performed on each lot shall be prepared by the approved independent testing laboratory performing the testing and submitted to the QCM for review and approval. The report shall be signed by an engineer who represents the laboratory and is registered as a Civil Engineer in the State of California. The report shall include, as a minimum, the following information for each test: contract number, bridge number, lot number and location, bar size, type of splice, length of mechanical splice, length of test specimen, physical condition of test sample splice, any notable defects, total measured slip, and ultimate tensile strength of each splice. In addition, the report shall include location of visible necking area and largest measured strain for ultimate butt splices.

The QCM must review, approve, and forward each Production Test Report to the Engineer for review before the splices represented by the report are encased in concrete. The Engineer will have 3 working days to review each Production Test Report and respond in writing after a complete report has been received. Should the Contractor elect to encase any splices before receiving notification from the Engineer, it is expressly understood that the Contractor will not be relieved of the responsibility for incorporating material in the work that conforms to the requirements of the plans and specifications. Material not conforming to these requirements will be subject to rejection.

Quality assurance test results for each bundle of 4 samples of splices will be reported in writing to the Contractor within 3 working days after receipt of the bundle by the Transportation Laboratory. In the event that more than one bundle is received on the same day, 2 additional working days shall be allowed for providing test results for each additional bundle received. A test report will be made for each bundle received. Should the Contractor elect to encase splices before receiving notification from the Engineer, it is expressly understood that the Contractor will not be relieved of the responsibility for incorporating material in the work that conforms to the requirements of the plans and specifications. Material not conforming to these requirements will be subject to rejection.

SECTION 56 SIGNS
(Issued 03-16-07)

In Section 56-1.03 replace the 5th paragraph with:

Clips, eyes, or removable brackets shall be affixed to all signs and all posts and shall be used to secure the sign during shipping and for lifting and moving during erection as necessary to prevent damage to the finished galvanized or painted surfaces. Brackets on tubular sign structures shall be removed after erection. Details of the devices shall be shown on the working drawings.

In Section 56-1.10 replace the 4th paragraph with:

The contract price paid per pound for install sign structure of the type or types designated in the Engineer's Estimate shall include full compensation for furnishing all labor, materials, tools, equipment and incidentals, and for doing all the work involved in installing sign structures, complete in place, including installing anchor bolt assemblies, removable sign panel frames, and sign panels and performing any welding, painting or galvanizing required during installation, as shown on the plans, as specified in these specifications and the special provisions, and as directed by the Engineer.

In Section 56-2.03 replace the 4th paragraph with:

Backfill material for metal posts shall consist of minor concrete conforming to the provisions in Section 90-10, "Minor Concrete," and shall contain not less than 463 pounds of cementitious material per cubic yard.

SECTION 59 PAINTING
(Issued 06-05-09)

In Section 59-1.03 replace the 3rd paragraph with:

Painting shall be done in a neat and workmanlike manner. Unless otherwise specified, paint shall be applied by brush, or spray, or roller, or any combination of these methods. Gun extensions shall not be used.

In Section 59-2.01 replace the 2nd paragraph with:

Unless otherwise specified, no painting Contractors or subcontractors will be permitted to perform work without having the following current "SSPC: The Society for Protective Coatings" (formerly the Steel Structures Painting Council) certifications in good standing throughout the duration of the contract:

A. For cleaning and painting structural steel in the field, certification in conformance with the requirements in Qualification Procedure No. 1, "Standard Procedure For Evaluating Painting Contractors (Field Application to Complex Industrial Structures)" (SSPC-QP 1).
B. For removing paint from structural steel, certification in conformance with the requirements in Qualification Procedure No. 2, "Standard Procedure for the Qualification of Painting Contractors (Field Removal of Hazardous Coatings from Complex Structures)" (SSPC-QP 2, Category A).
C. For cleaning and painting structural steel in a permanent painting facility, certification in conformance with the requirements in Qualification Procedure No. 3, "Standard Procedure For Evaluating Qualifications of Shop Painting Applicators" (SSPC-QP 3, Enclosed Shop Facility). The AISC's Sophisticated Paint Endorsement (SPE) quality program, Certification P-1 Enclosed, will be considered equivalent to SSPC-QP 3, Enclosed Shop Facility.

In Section 59-2.12 replace the 3rd and 4th paragraphs with:

Contact surfaces of stiffeners, railings, built up members or open seam exceeding 6 mils in width that would retain moisture, shall be caulked with polysulfide or polyurethane sealing compound conforming to the requirements in ASTM Designation: C 920, Type S, Grade NS, Class 25, Use O, or other approved material.

The dry film thickness of the paint will be measured in place with a calibrated Type 2 magnetic film thickness gage in conformance with the requirements in SSPC-PA 2, "Measurement of Dry Coating Thickness with Magnetic Gages," of the "SSPC: The Society for Protective Coatings," except that there shall be no limit to the number or location of spot measurements to verify compliance with specified thickness requirements.

SECTION 64 PLASTIC PIPE
(Issued 06-05-09)

In Section 64-1.02 REPLACE the 5th paragraph with:

HDPE compounds used in the manufacture of corrugated polyethylene pipe and fittings shall comply with AASHTO M 294 except that the mix shall contain not less than 2 nor greater than 4 percent well dispersed carbon black. HDPE compounds used in the manufacture of ribbed profile wall polyethylene pipe shall comply with ASTM F 894 except that Type E ultraviolet stabilizers shall not be allowed and carbon black shall be well dispersed in an amount not less than 2 percent nor greater than 4 percent.

Manufacturers of corrugated polyethylene pipe shall:

1. Participate in the National Transportation Product Evaluation Control Program (NTPEP) for each plant supplying corrugated polyethylene pipe and fittings for the project.
2. Conduct and maintain a quality control program under NTPEP.
3. Submit a copy to the Engineer of manufacturing plant audits and NTPEP test results from the current cycle of NTPEP testing for all pipe diameters supplied.

Type D corrugated polyethylene pipe is not allowed. Corrugated polyethylene pipe greater than 60 inches in nominal diameter is not allowed.

In Section 64-1.05 REPLACE the 1st paragraph with:

Excavation, backfill, and shaped bedding shall comply with Section 19-3, "Structure Excavation and Backfill," except the following:

1. At locations where pipe is to be backfilled with concrete, the backfill shall comply with Section 64-1.06, "Concrete Backfill."
2. Corrugated polyethylene pipe that is greater than 48 inches in nominal diameter but not exceeding 60 inches in nominal diameter shall be backfilled with either controlled low strength material under the special provisions or slurry cement backfill under Section 19-3.062, "Slurry Cement Backfill."
3. Where cementitious or flowable backfill is used for structure backfill, the backfill shall be placed to a level not less than 12 inches above the crown of the pipe.

In Section 64-1.06 REPLACE the 1st paragraph with:

At locations where pipe is to be backfilled with concrete as shown on the plans, the concrete backfill shall be constructed of minor concrete or Class 4 concrete conforming to the provisions in Section 90, "Portland Cement Concrete." Minor concrete shall contain not less than 380 pounds of cementitious material per cubic yard. The concrete to be used will be designated in the contract item or shown on the plans.

In Section 64-1.06 REPLACE the 3rd paragraph with:

The surface of the concrete backfill shall be broomed with a heavy broom to produce a uniform rough surface if hot mix asphalt is to be placed directly thereon.

SECTION 70 MISCELLANEOUS FACILITIES
(Issued 11-30-10)

In Section 70-1.02C replace the 2nd paragraph with:

Precast concrete flared end sections shall conform to the requirements for Class III Reinforced Concrete Pipe in AASHTO Designation: M 170M. Cementitious materials and aggregate shall conform to the provisions in Section 90-2, "Materials," except that grading requirements shall not apply to the aggregate. Use of supplementary cementitious material shall conform to the requirements in AASHTO Designation: M 170. The area of steel reinforcement per linear foot of flared end section shall be at least equal to the minimum steel requirements for circular reinforcement in circular pipe for the internal diameter of the circular portion of the flared end section. The basis of acceptance of the precast concrete flared end section shall conform to the requirements of Section 5.1.2 of AASHTO Designation: M 170.

In Section 70-1.02H replace the 1st paragraph with:

Precast concrete pipe risers and pipe reducers, and precast concrete pipe sections, adjustment rings and tapered sections for pipe energy dissipators, pipe inlets and pipe manholes shall conform to the requirements in AASHTO Designation: M 199M/M 199, except that the cementitious material and aggregate shall conform to the provisions in Section 90-2, "Materials," except that grading requirements shall not apply to the aggregate. Use of supplementary cementitious material shall conform to the requirements in AASHTO Designation: M 170.

In Section 70-1.03 replace the 2nd paragraph with:

Cutoff walls for precast concrete flared end sections shall be constructed of minor concrete conforming to the provisions in Section 90-10, "Minor Concrete." Minor concrete shall contain not less than 470 pounds of cementitious material per cubic yard.

SECTION 72 SLOPE PROTECTION
(Issued 03-13-09)

In Section 72-4.04 replace the 6th paragraph with:

Pervious backfill material, if required by the plans, shall be placed as shown. A securely tied sack containing one cubic foot of pervious backfill material shall be placed at each weep hole and drain hole. The sack material shall conform to the requirements for filter fabric in Section 88-1.02, "Filtration."

SECTION 75 MISCELLANEOUS METAL
(Issued 06-05-09)

In Section 75-1.03 replace the 13th paragraph with:

Concrete anchorage devices shall be mechanical expansion or resin capsule types installed in drilled holes or cast-in-place insert types. The anchorage devices shall be selected from the Department's Pre-Qualified Products List. The qualification requirements for concrete anchorage devices may be obtained from the Pre-Qualified Products List Web site.

The anchorage devices shall be a complete system, including threaded studs, hex nuts, and cut washers. Thread dimensions for externally threaded concrete anchorage devices prior to zinc coating shall conform to the requirements in ASME Standard: B1.1 having Class 2A tolerances or ASME Standard: B1.13M having Grade 6g tolerances. Thread dimensions for internally threaded concrete anchorage devices shall conform to the requirements in ASTM A 563.

In Section 75-1.03 replace the 18th paragraph with:

Mechanical expansion anchors shall, when installed in accordance with the manufacturer's instructions and these specifications and tested in conformance with the requirements in California Test 681, withstand the application of a sustained tension test load of at least the following values for at least 48 hours with a movement not greater than 0.035 inch:

Stud Diameter (inches)	Sustained Tension Test Load (pounds)
*3/4	5,000
5/8	4,100
1/2	3,200
3/8	2,100
1/4	1,000

* Maximum stud diameter permitted for mechanical expansion anchors.

Resin capsule anchors shall, when installed in accordance with the manufacturer's instructions and these specifications and tested in conformance with the requirements in California Test 681, withstand the application of a sustained tension test load of at least the following values for at least 48 hours with a movement not greater than 0.010 inch:

Stud Diameter (inches)	Sustained Tension Test Load (pounds)
1-1/4	31,000
1	17,900
7/8	14,400
3/4	5,000
5/8	4,100
1/2	3,200
3/8	2,100
1/4	1,000

At least 25 days before use, the Contractor shall submit one sample of each resin capsule anchor per lot to the Transportation Laboratory for testing. A lot of resin capsule anchors is 100 units, or fraction thereof, of the same brand and product name.

In Section 75-1.03 replace the 20th paragraph with:

A Certificate of Compliance for concrete anchorage devices shall be furnished to the Engineer in conformance with the provisions in Section 6-1.07, "Certificates of Compliance."

In Section 75-1.03 replace the 24th paragraph with:

Sealing compound, for caulking and adhesive sealing, shall be a polysulfide or polyurethane material conforming to the requirements in ASTM Designation: C 920, Type S, Grade NS, Class 25, Use O.

In Section 75-1.035 in the 3rd paragraph, replace the 1st sentence with:

Cables shall be 3/4 inch preformed, 6 x 19, wire strand core or independent wire rope core (IWRC), galvanized in conformance with the requirements in Federal Specification RR-W-410, right regular lay, manufactured of improved plow steel with a minimum breaking strength of 23 tons.

In Section 75-1.035 in the 4th paragraph, replace item C with:

C. Nuts shall conform to the requirements in ASTM Designation: A 563 including Appendix X1, except lubrication is not required.

In Section 75-1.035 replace the 12th paragraph with:

Concrete for filling cable drum units shall conform to the provisions in Section 90-10, "Minor Concrete," or at the option of the Contractor, may be a mix with 3/8-inch maximum size aggregate and not less than 675 pounds of cementitious material per cubic yard.

In Section 75-1.05 replace the 6th paragraph with:

Galvanizing of iron and steel hardware and nuts and bolts, when specified or shown on the plans, shall conform to the requirements in ASTM Designation: A 153/A 153M, except whenever threaded studs, bolts, nuts, and washers are specified to conform to the requirements in ASTM Designation: A

307, A 325, A 449, A 563, or F 436 and zinc coating is required, they shall be hot-dip zinc coated or mechanically zinc coated in conformance with the requirements in the ASTM Designations. Unless otherwise specified, galvanizing shall be performed after fabrication.

In Section 75-1.05 replace the 8th paragraph with:

Tapping of nuts or other internally threaded parts to be used with zinc coated bolts, anchor bars or studs shall be done after galvanizing and shall conform to the requirements for thread dimensions and overtapping allowances in ASTM Designation: A 563.

SECTION 83 RAILINGS AND BARRIERS
(Issued 04-03-09)

In Section 83-1.02 replace the 7th paragraph with:

Mortar shall conform to the provisions in Section 51-1.135, "Mortar," and shall consist of one part by volume of cementitious material and 3 parts of clean sand.

In Section 83-1.02B in the 24th paragraph in the 8th subparagraph, replace the 1st sentence with:

Anchor cable shall be 3/4 inch preformed, 6 x 19, wire strand core or independent wire rope core (IWRC), galvanized in conformance with the requirements in Federal Specification RR-W-410, right regular lay, manufactured of improved plow steel with a minimum breaking strength of 23 tons.

In Section 83-1.02E in the 6th paragraph, replace the 2nd sentence with:

Cable shall be galvanized in conformance with the requirements in Federal Specification RR-W-410.

In Section 83-1.02I replace the 5th paragraph with:

Where shown on the plans, cables used in the frame shall be 5/16 inch in diameter, wire rope, with a minimum breaking strength of 5,000 pounds and shall be galvanized in conformance with the requirements in Federal Specification RR-W-410.

In Section 83-1.02I replace the 14th paragraph with:

Chain link fabric shall be 11-gage conforming to one of the following:

1. AASHTO Designation: M181, Type I, Class C
2. AASHTO Designation: M181, Type IV, Class A
3. ASTM F 1345, Class 2

In Section 83-2.02D(1) replace the 5th paragraph with:

When concrete barriers are to be constructed on existing structures, the dowels shall be bonded in holes drilled in the existing concrete. Drilling of holes and bonding of dowels shall conform to the following:

1. The bonding materials shall be either magnesium phosphate concrete, modified high alumina based concrete or portland cement based concrete. Magnesium phosphate concrete shall be either single component (water activated) or dual component (with a prepackaged liquid activator). Modified high alumina based concrete and portland cement based concrete shall be water activated. Bonding materials shall conform to the following requirements:

Property	Test Method	Requirements
Compressive Strength		
at 3 hours, MPa	California Test 551	21 min.
at 24 hours, MPa	California Test 551	35 min.
Flexure Strength		
at 24 hours, MPa	California Test 551	3.5 min.
Bond Strength: at 24 hours		
SSD Concrete, MPa	California Test 551	2.1 min.
Dry Concrete, MPa	California Test 551	2.8 min.
Water Absorption, %	California Test 551	10 max.
Abrasion Resistance		
at 24 hours, grams	California Test 550	25 max.
Drying Shrinkage at 4 days, %	ASTM Designation: C 596	0.13 max.
Soluble Chlorides by weight, %	California Test 422	0.05 max.
Water Soluble Sulfates by weight, %	California Test 417	0.25 max.

2. Magnesium phosphate concrete shall be formulated for minimum initial set time of 15 minutes and minimum final set time of 25 minutes at 70° F. The materials, prior to use, shall be stored in a cool, dry environment.
3. Mix water used with water activated material shall conform to the provisions in Section 90-2.03, "Water."
4. The quantity of water for single component type or liquid activator (for dual component type) to be blended with the dry component, shall be within the limits recommended by the manufacturer and shall be the least amount required to produce a pourable batter.
5. Addition of retarders, when required and approved by the Engineer, shall be in conformance with the manufacturer's recommendations.
6. Before using concrete material that has not been previously approved, a minimum of 45 pounds shall be submitted to the Engineer for testing. The Contractor shall allow 45 days for the testing. Each shipment of concrete material that has been previously approved shall be accompanied by a Certificate of Compliance as provided in Section 6-1.07, "Certificates of Compliance."
7. Magnesium phosphate concrete shall not be mixed in containers or worked with tools containing zinc, cadmium, aluminum or copper metals. Modified high alumina based concrete shall not be mixed in containers or worked with tools containing aluminum.
8. The surface of any dowel coated with zinc or cadmium shall be coated with a colored lacquer before installation of the dowel. The lacquer shall be allowed to dry thoroughly before embedment of the dowels.

9. The holes shall be drilled by methods that will not shatter or damage the concrete adjacent to the hole. The diameter of the drilled hole shall be 1/2 inch larger than the nominal diameter of the dowels.
10. The drilled holes shall be clean and dry at the time of placing the bonding material and the steel dowels. Bonding material and dowel shall completely fill the drilled hole. The surface temperature shall be 40° F or above when the bonding material is placed.
11. After bonding, dowels shall remain undisturbed for a minimum of 3 hours or until the bonding material has reached a strength sufficient to support the dowels. Dowels that are improperly bonded, as determined by the Engineer, shall be removed. The holes shall be cleaned or new holes shall be drilled and the dowels replaced and securely bonded to the concrete. Removing, redrilling and replacing improperly bonded dowels shall be performed at the Contractor's expense. Modified high alumina based concrete and portland cement based concrete shall be cured in conformance with the provisions in Section 90-7.01B, "Curing Compound Method," of the Standard Specifications. Magnesium phosphate concrete shall not be cured.

In Section 83-2.02D(2) in the 1st paragraph, replace item b with:

b. If the 3/8-inch maximum size aggregate grading is used to construct extruded or slip-formed concrete barriers, the cementitious material content of the minor concrete shall be not less than 675 pounds per cubic yard.

In Section 83-2.02D(2) replace the 3rd paragraph with:

The concrete paving between the tops of the 2 walls of concrete barrier (Types 50E, 60E, 60GE, and 60SE) and the optional concrete slab at the base between the 2 walls of concrete barrier (Types 50E, 60E, 60GE, and 60SE) shall be constructed of minor concrete conforming to the provisions of Section 90-10, "Minor Concrete," except that the minor concrete shall contain not less than 505 pounds of cementitious material per cubic yard.

SECTION 85 PAVEMENT MARKERS
(Issued 07-31-07)

In Section 85-1.06 replace the 6th paragraph with:

Pavement markers shall not be placed on new hot mix asphalt surfacing or seal coat until the surfacing or seal coat has been opened to public traffic for a period of not less than 7 days when hot melt bituminous adhesive is used, and not less than 14 days when epoxy adhesive is used.

In Section 85-1.06 in the 14th paragraph, replace the 2nd sentence with:

Cleaning shall be done by blast cleaning on all surfaces regardless of age or type, except that blast cleaning of clean, new hot mix asphalt and clean, new seal coat surfaces will not be required when hot melt bituminous adhesive is used.

SECTION 86 SIGNALS, LIGHTING AND ELECTRICAL SYSTEMS
(Issued 06-05-09)

Replace Section 86 with:
SECTION 86 ELECTRICAL SYSTEMS
86-1 GENERAL

86-1.01 DESCRIPTION
Section 86 includes specifications for installing, modifying, and removing:

1. Traffic signal
2. Interconnect system
3. Ramp metering system
4. Flashing beacon system
5. Lighting system
6. Sign illumination system
7. Traffic monitoring station
8. Communication system
9. Electrical equipment in structure
10. Falsework lighting

Comply with Part 4 of the California MUTCD. Nothing in this Section 86 is to be construed as to reduce the minimum standards in this manual.
The locations of electrical system elements are approximate; the Engineer will approve final location.

86-1.015 DEFINITIONS
Definitions pertain only to Section 86, "Electrical Systems."

actuation: The action of a vehicle or pedestrian causing a detector to create a call in that phase or movement to request right of way.

channel: Discrete information path.

controller assembly: Controller unit and auxiliary equipment housed in a rainproof cabinet to control a system's operations.

controller unit: Part of the controller assembly performing the basic timing and logic functions.

detector: Device indicating passage or presence of vehicles or pedestrians.

electrolier: Complete assembly of lighting standard and luminaire.

flasher: Device to open and close signal circuits at a repetitive rate.

flashing beacon control assembly: Switches, circuit breakers, terminal blocks, flasher, wiring, and necessary electrical components all housed in a single enclosure to properly operate a beacon.

inductive loop detector: Detector capable of being actuated by inductance change caused by vehicle passing or standing over the loop.

lighting standard: Pole and mast arm supporting the luminaire.

luminaire: Consists of housing, reflector, refractor or lens, lamp socket, integral ballast, terminal strip, and lamp.

magnetic detector: Detector capable of being actuated by induced voltage caused by vehicle passing through the earth's magnetic field.

powder coating: A coating applied electrostatically using UV-stable polyester triglycidyl isocyanurate exterior grade powder

pre-timed controller assembly: Operates traffic signals under a predetermined cycle length.

signal face: As defined in the California MUTCD.
signal head: As defined in the California MUTCD.
signal indication: As defined in the California MUTCD.
signal section: As defined in the California MUTCD.
signal standard: Pole and mast arm supporting one or more signal faces with or without a luminaire mast arm.
traffic-actuated controller assembly: Operates traffic signals under the varying demands of traffic as registered by detector actuation.
traffic phase: Signal phase as defined in the California MUTCD.
vehicle: As defined in the California Vehicle Code.

86-1.02 REGULATIONS AND CODE Electrical equipment must comply with one or more of the following:

1. EIA
2. ETL
3. NEMA
4. NETA
5. UL

Materials and workmanship must comply with:

1. ANSI
2. ASTM
3. 8 CA Code of Regs § 2299 et seq.
4. FCC
5. ITE
6. NEC
7. Public Utilities Commission, General Order No. 95, "Rules for Overhead Electrical Line Construction"
8. Public Utilities Commission, General Order No. 128, "Rules for Construction of Underground Electric Supply and Communication Systems"

86-1.03 COST BREAK-DOWN

Determine quantities required to complete work. Submit the quantities as part of the cost breakdown.

The sum of the amounts for the units of work listed in the cost breakdown must equal the contract lump sum price bid for the work. Include overhead and profit for each unit of work listed in the cost breakdown. If mobilization is a bid item, include bond premium, temporary construction facilities, and material plants into the mobilization bid item, otherwise, include in each unit of work listed in the cost breakdown. Do not include costs for traffic control system in the cost breakdown.

The cost breakdown may be used to determine partial payment and to calculate payment adjustments for additional costs incurred due to a change order. If a change order increases or decreases the quantities, payment adjustment may be determined under Section 4-1.03B, "Increased or Decreased Quantities."

The cost breakdown must include type, size, and installation method for:

1. Foundations
2. Standards and poles
3. Conduit

4. Pull boxes
5. Conductors
6. Service equipment enclosures
7. Telephone demarcation cabinet
8. Signal heads and hardware
9. Pedestrian signal heads and hardware
10. Pedestrian push buttons
11. Loop detectors
12. Luminaires and lighting fixtures

86-1.04 EQUIPMENT LIST AND DRAWINGS

Within 15 days of contract approval, submit for review a list of equipment and materials that you propose to install. Comply with Section 5-1.02, "Plans and Working Drawings." The list must include:

1. Name of manufacturer
2. Dimension
3. Item identification number
4. List of components

The list must be supplemented by other data as required, including:

1. Schematic wiring diagrams
2. Scale drawings of cabinets showing location and spacing of shelves, terminal blocks, and equipment, including dimensioning
3. Operation manual

Submit 2 copies of the above data. The Engineer will review within 15 days.

Electrical equipment that is manufactured as detailed on the plans will not require detailed drawings and diagrams.

Furnish 3 sets of computer-generated cabinet schematic wiring diagrams.

The cabinet schematic wiring diagram must be placed in a heavy duty plastic envelope and attached to the inside of the door of each cabinet.

Prepare diagrams, plans, and drawings using graphic symbols in IEEE 315, "Graphic Symbols for Electrical and Electronic Diagrams."

86-1.05 CERTIFICATE OF COMPLIANCE

Submit a Certificate of Compliance for all electrical material and equipment to the Engineer under Section 6-1.07, "Certificates of Compliance."

86-1.06 MAINTAINING EXISTING AND TEMPORARY ELECTRICAL SYSTEMS

Keep existing electrical system or approved temporary replacement in working order during the progress of the work. Shutdown is allowed for alteration or removal of the system. Traffic signal shutdown must be limited to normal working hours. Lighting system shutdown must not interfere with the regular lighting schedule.

Notify the Engineer before performing work on the existing system.

Notify the local traffic enforcement agency before traffic signal shutdown.

If existing or temporary system must be modified, work not shown on the plans or specified in the special provisions, but required to keep the system in working order will be paid for as extra work as specified in Section 4-1.03D, "Extra Work."

The State or local agency will:

1. Continue the operation and maintenance of existing electrical facilities
2. Continue to provide electrical energy to operate existing electrical facilities
3. Repair or replace existing facilities damaged by public traffic
4. Pay for electrical energy to operate existing or new facilities undergoing the functional tests described in Section 86-2.14C, "Functional Testing"

Verify location and depth of existing detectors, conduits, pull boxes, and other electrical facilities before using tools or equipment that may damage those facilities or interfere with an electrical system.

Notify the Engineer immediately if existing facility is damaged by your activities. Repair or replace damaged facility promptly. If you fail to complete the repair or replacement, promptly, the State will repair or replace and deduct the costs.

Damaged detectors must be replaced within 24 hours at your expense. If you fail to complete the repair within 24 hours, the State will repair and deduct the repair costs.

If roadway remains open to traffic while an existing lighting system is modified:

1. Keep existing system in working order
2. Make final connection so the modified circuit is in operation by nightfall

Keep temporary electrical installations in working order until no longer required. Remove temporary installations as specified in Section 86-7, "Removing, Reinstalling or Salvaging Electrical Equipment."

These provisions do not void your responsibilities as specified in Section 7-1.12, "Indemnification and Insurance," and Section 7-1.16, "Contractor's Responsibility for the Work and Materials."

During traffic signal system shutdown, place W3-1a, "STOP AHEAD," and R1-1, "STOP," signs in each direction to direct traffic through the intersection. For 2-lane approaches, place 2 R1-1 signs.

W3-1a and R1-1 signs must comply with Section 12-3.06, "Construction Area Signs." Use a minimum size of 30 inches for the R1-1 sign.

Cover signal faces when the system is shut down overnight. Cover temporary W3-1a and R1-1 signs when the system is turned on.

86-1.07 SCHEDULING OF WORK

Except service installation and service equipment enclosure, do not work above ground until all materials are on hand to complete electrical work at each location. Schedule work to allow each system to be completed and ready for operation before opening the corresponding section of the roadway to traffic.

If street lighting exists or is installed in conjunction with traffic signals, do not turn on the signals until the street lighting is energized.

Traffic signals will not be placed in operation until the roadways to be controlled are open to public traffic.

Lighting and traffic signals, including flashing operation, will not be placed in operation before starting the functional test period specified in Section 86-2.14, "Testing."

Do not pull conductors into conduit until:

1. Pull boxes are set to grade
2. Metallic conduit is bonded

In vehicular undercrossings, soffit lights must be in operation as soon as practicable after falsework has been removed from the structure. Lighting for pedestrian structures must be in operation before opening the structure to pedestrian traffic.

If the Engineer orders soffit lights or lighting for pedestrian structures to be activated before permanent power service is available, the cost of installing and removing temporary power service will be paid for as extra work as specified in Section 4-1.03D, "Extra Work."

The initial traffic signal turn-on must be made between 9:00 a.m. and 2:00 p.m. Before the initial turn-on, all equipment, including pedestrian signals, pedestrian push buttons, vehicle detectors, lighting, signs, and pavement delineation must be installed and in working order. Direct louvers, visors, and signal faces to maximize visibility.

Start functional tests on any working day except Friday or the day before a legal holiday. You must notify the Engineer 48 hours before the start of functional test.

86-1.08 (BLANK)

86-2 MATERIALS AND INSTALLATION

86-2.01 EXCAVATING AND BACKFILLING

Dispose of surplus excavated material under Section 7-1.13, "Disposal of Materials Outside the Highway Right of Way."

Backfill as specified in Section 19-3, "Structure Excavation and Backfill." Compact backfill in conduit trenches outside the hinge point of slopes and not under pavement to a minimum relative compaction of 90 percent. Compact backfill within hinge points and in areas where pavement is to be constructed to a minimum relative compaction of 95 percent.

Backfill trenches and restore sidewalk, pavement, and landscaping at one intersection before starting excavation at another intersection.

If excavating on a street or highway, restrict closure to 1 lane at a time.

86-2.02 REMOVING AND REPLACING IMPROVEMENTS

Replace or reconstruct sidewalk, curb, gutter, concrete pavement, asphalt concrete pavement, underlying material, lawn, plant, and other facilities damaged by your activities. Replacement material must be of equal or better quality than the material replaced. Work must be in a serviceable condition.

If a part of a square or slab of concrete sidewalk, curb, gutter, or driveway is broken or damaged, the entire square or slab must be removed and reconstructed.

Cut outline of PCC sidewalk or driveway to be removed:

1. Using a power-driven saw
2. On a neat line
3. To a 0.17-foot minimum depth

86-2.03 FOUNDATIONS

Except for concrete for cast-in-drilled-hole concrete pile foundation, PCC must comply with Section 90-10, "Minor Concrete."

Construct concrete foundation on firm ground.

After each post, standard, and pedestal is properly positioned, place mortar under the base plate. Finish exposed portion to present a neat appearance. Mortar must comply with Section 51-1.135, "Mortar," except mortar must have:

1. 1 part by volume of cementitious material
2. 3 parts by volume of clean sand

Reinforced cast-in-drilled-hole concrete pile foundation must comply with Section 49, "Piling," except:

1. Material resulting from drilling holes must be disposed of as specified in Section 86-2.01, "Excavating and Backfilling"
2. Concrete for cast-in-drilled-hole concrete pile will not be considered as designated by compressive strength

Form exposed portion of the foundation to present a neat appearance and true to line and grade. The top of a foundation for post and standard must be finished to curb or sidewalk grade. Forms must be rigid and securely braced in place. Conduit ends and anchor bolts must be placed at proper height and position. Anchor bolts must be installed a maximum of 1:40 from vertical and held in place by rigid top and bottom templates. Use a steel bottom template at least 1/2 inch thick that provides proper spacing and alignment of anchor bolts near the embedded bottom end. Install bottom template before placing footing concrete.

Provide new foundation and anchor bolts of the proper type and size for relocated standards.

Steel parts must be galvanized as specified in Section 75-1.05, "Galvanizing."

Provide 2 nuts and washers for the upper threaded part of each anchor bolt. Provide 3 nuts and washers for each anchor bar or stud.

Do not weld high-strength steel used for anchor bolt, anchor bar, or stud.

Before placing concrete, moisten forms and ground. Keep forms in place until the concrete sets for at least 24 hours and is strong enough to prevent damage to surface.

Except if located on a structure, construct foundation for post, standard, and pedestal monolithically.

Apply ordinary surface finish as specified in Section 51-1.18A, "Ordinary Surface Finish."

If a foundation must be extended for additional depth, the extension work will be paid for as extra work as specified in Section 4-1.03D, "Extra Work."

Do not erect post, pole, standard, pedestal, or cabinet until the foundation is set for a minimum of 7 days.

The Engineer will choose the plumbing or raking technique for posts, standards, and pedestals. Plumb or rake by adjusting the leveling nuts before tightening nuts. Do not use shims or similar devices. After final adjustments of both top nuts and leveling nuts on anchorage assemblies have been made, and each post, standard, and pedestal on structure is properly positioned, tighten nuts as follows:

1. Tighten leveling nuts and top nuts, following a crisscross pattern, until bearing surfaces of all nuts, washers, and base plates are in firm contact.
2. Use an indelible marker to mark the top nuts and base plate with lines showing relative alignment of the nut to the base plate.
3. Tighten top nuts, following a crisscross pattern, an additional 1/6th of a turn.

In unpaved areas, construct a raised PCC pad in front of each controller cabinet.

Completely remove foundations not to be reused or abandoned.

If abandoning a foundation, remove the top of foundation, anchor bolts, and conduits to a minimum depth of 0.5 foot below sidewalk surface or original ground. Backfill the resulting hole with material equivalent to the surrounding material.

86-2.04 STANDARDS, STEEL PEDESTALS AND POSTS

Bolts, including anchor bolts, nuts, and washers for signal and lighting support structures must comply with Section 55-2, "Materials." Except for bearing-type connection or slip-base, high-strength bolted connection must comply with Section 55-3.14, "Bolted Connections." Welding,

nondestructive testing of welds, and acceptance and repair criteria for steel member nondestructive testing must comply with American Welding Society (AWS) D1.1.

Using stainless steel rivets, attach rectangular corrosion-resistant metal identification tag on all standards and poles, except Type 1:

1. Above the hand hole, near the base of standards and poles
2. On the underside of mast arms near the arm plate

The lettering on each identification tag must be depressed or raised, 1/4 inch tall, legible, and include the following information:

1. Name of the manufacturer
2. Date of manufacture
3. Identification number
4. Contract number
5. Unique identification code that is:

    5.1. Assigned by the manufacturer
    5.2. Traceable to a particular contract and the welds on that component
    5.3. Readable after the support structure is coated and installed

Type 1 standard and steel pedestal for controller cabinet must be manufactured of one of the following:

1. 0.12-inch or thicker galvanized steel
2. 4-inch standard weight galvanized steel pipe as specified in ASTM A 53
3. 4-inch Type 1 conduit with the top designed for post-top slip-fitter

Ferrous metal parts of a standard that has a shaft length of 15 feet or longer must comply with the provisions in Section 55-2, "Materials," and the following:

1. Standard must be manufactured from sheet steel of weldable grade having a minimum yield strength of 40,000 psi after manufacturing.
2. Certified test report verifying compliance with minimum yield strength requirements must be submitted. Test report may be the mill test report for the as-received steel or if the as-received steel has a lower yield strength than required you must provide test data assuring that your method of cold forming will consistently increase the tensile properties of the steel to meet the specified minimum yield strength. Test data must include tensile properties of the steel after cold forming for specific heats and thicknesses.
3. If a single-ply 5/16-inch thick pole is specified, a 2-ply pole with equivalent section modulus may be substituted.
4. Standard may be manufactured of full-length sheets or shorter sections. Each section must be manufactured from 1 or 2 pieces of sheet steel. If 2 pieces are used, the longitudinal welded seams must be directly opposite from one another. If the sections are butt-welded together, the longitudinal welded seams of adjacent sections must be placed to form continuous straight seams from base to top of standard.
5. Butt-welded circumferential joints of tubular sections requiring CJP groove welds must be made using a metal sleeve backing ring inside each joint. The sleeve must be 1/8 inch nominal thickness, or thicker, and manufactured from steel having the same chemical composition as the steel in the tubular sections to be joined. If the sections to be joined have different specified minimum yield strengths, the steel in the sleeve must have the same

chemical composition as the tubular section having the higher minimum yield strength. The width of the metal sleeve must be consistent with the type of nondestructive testing selected and must be a minimum width of 1 inch. At fitting time, the sleeve must be centered at the joint and in contact with the tubular section at the point of the weld.

6. Welds must be continuous.
7. Weld metal at the transverse joint must extend to the sleeve, making the sleeve an integral part of the joint.
8. During manufacturing, longitudinal seams on vertical tubular members of cantilevered support structures must be centered on and along the side of the pole that the pole plate is located. Longitudinal seams on horizontal tubular members, including signal and luminaire arms, must be within ±45 degrees of the bottom of the arm.
9. Longitudinal seam weld in steel tubular section may be made by the electric resistance welding process.
10. Longitudinal seam weld must have 60 percent minimum penetration, except:

    10.1. Within 6 inches of circumferential weld, longitudinal seam weld must be CJP groove weld.
    10.2. Longitudinal seam weld on lighting support structure having telescopic pole segment splice must be CJP groove weld on the female end for a length on each end equal to the designated slip-fit splice length plus 6 inches.

11. Exposed circumferential weld, except fillet and fatigue-resistant weld, must be ground flush with the base metal before galvanizing or painting. Ground flush is specified as -0, +0.08-inch.
12. Circumferential weld and base plate-to-pole weld may be repaired only one time.
13. Exposed edges of the plates that make up the base assembly must be finished smooth and exposed corners of the plates must be broken. Provide shafts with slip-fitter shaft caps.
14. Surface flatness requirements of ASTM A 6 apply to plates:

    14.1. In contact with concrete, grout, or washers and leveling nuts
    14.2. In high-strength bolted connections
    14.3. In joints, where cap screws are used to secure luminaire and signal arms
    14.4. Used for breakaway slip-base assemblies

15. Standard must be straight with a maximum variation of:

    15.1. 1 inch measured at the midpoint of a 30-foot to 35-foot standard
    15.2. 3/4 inch measured at the midpoint of a 17-foot to 20-foot standard
    15.3. 1 inch measured 15 feet above the base plate for Type 35 and Type 36 standards

16. Zinc-coated nuts used on fastener assemblies having a specified preload obtained by specifying a prescribed tension, torque value, or degree of turn must be provided with a colored lubricant, clean and dry to the touch. The lubricant color must contrast the zinc coating color on the nut so the presence of the lubricant is visually obvious. Lubricant must be insoluble in water or the fastener components must be shipped to the job site in a sealed container.
17. Do not make additional holes in structural members.
18. Standard with an outside diameter of 12 inches or less must be round. Standard with an outside diameter greater than 12 inches must be round or multisided. Multisided standard must be convex with a minimum of 12 sides and have a minimum bend radius of 4 inches.
19. Manufacture mast arm from material specified for standard.

20. Manufacture cast steel option for slip base from material of Grade 70-40, as specified in ASTM A 27/A 27M. Other comparable material may be used if approved by the Engineer. The casting tolerances must comply with the Steel Founders' Society of America's recommendations for green sand molding.
21. One casting from each lot of a maximum of 50 castings must be radiographed as specified in ASTM E 94. Casting must comply with the acceptance criteria for severity level 3 or better for the types and categories of discontinuities in ASTM E 186 and E 446. If the casting fails the inspection, 2 additional castings must be radiographed. If the 2 additional castings fail the inspection, the entire lot will be rejected.
22. Material certification, consisting of physical and chemical properties, and radiographic film of the casting must be filed at the manufacturer's office. Certification and film must be available for inspection.
23. High-strength bolts, nuts, and flat washers used to connect slip-base plate must comply with ASTM A 325 or A 325M and be galvanized as specified in Section 75-1.05, "Galvanizing."
24. Plate washers must be manufactured by saw cutting and drilling steel plate. Steel plate must comply with AISI 1018 and be galvanized as specified in Section 75-1.05, "Galvanizing." Before galvanizing, remove burrs and sharp edges and chamfer both sides of holes to allow the bolt head to make full contact with the washer without tension.
25. High-strength cap screws for attaching arms to standards must comply with ASTM A 325, A 325M, or A 449, and the mechanical requirements in ASTM A 325 or A 325M after galvanizing. Cap screws must be galvanized as specified in Section 75-1.05, "Galvanizing." Coat threads of cap screws with a colored lubricant, clean and dry to the touch. Lubricant color must contrast the zinc-coating color on the cap screw so the presence of the lubricant is visually obvious. Lubricant must be insoluble in water or the fastener components must be shipped to the job site in a sealed container.
26. Bolted connection attaching signal or luminaire arm to pole must be considered slip critical. Galvanized faying surfaces of plates on luminaire, signal arm, and pole must be roughened by hand using a wire brush before assembly and must comply with requirements for Class C surface conditions for slip-critical connections in "Specification for Structural Joints Using ASTM A 325 or A 490 Bolts," a specification approved by the Research Council on Structural Connections (RCSC). Paint for faying surfaces must be as specified in the RCSC specification for Class B coating.
27. The Engineer will randomly take samples of fastener components from each production lot and submit to the Transportation Laboratory with test reports as specified in ASTM fastener specifications for QA testing and evaluation. The Engineer will determine sample sizes for each fastener component.

Change in mast arm configuration is allowed as long as the mounting height and stability are maintained.

Before manufacturing, details must be adjusted to ensure that cap screw heads can be turned using conventional installation tools. During manufacturing process, to avoid interference with the cap screw heads, the position of the luminaire arm on the arm plate must be properly located.

Configure mast arm as a smooth curving arm.

Push button post, pedestrian barricade, and guard post must comply with ASTM A 53.

Assemble and tighten slip base when pole is on the ground. Threads of heavy hex nuts for each slip-base bolt must be coated with additional lubricant that is clean and dry to the touch. Tighten high strength slip-base bolts to within ±10 foot-pounds of the following:

Slip-Base Bolt-Tightening Requirements

Standard Type	Torque (foot-pounds)
15-SB	150
30	150
31	200
36-20A	165

Hole in shaft of existing standard, due to removal of equipment or mast arms, must be sealed by fastening a galvanized steel disk to cover the hole. Fasten using a single central galvanized steel fastener. Seal edges of disk and hole with polysulfide or polyurethane sealing compound of Type S, Grade NS, Class 25, and Use O, as specified in ASTM C 920.

If existing standard is ordered to be relocated or reused, remove large dents, straighten shafts, and replace parts that are in poor condition. You must furnish anchor bolts or bars and nuts required for relocating or reusing standard. Repair and replacement work will be paid for as extra work as specified in Section 4-1.03D, "Extra Work."

New nuts, bolts, cap screws, and washers must be provided if:

1. Standard or mast arm is relocated
2. Used standard or mast arm is State furnished

If the standard has a slip base, a new keeper plate must be provided.

86-2.05 CONDUIT

Run conductors in conduit except for overhead and where conductors are run inside poles.

You may use a larger size conduit than specified as long as you use it for the entire length between outlets. Do not use reducing coupling.

New conduit must not pass through existing foundations for standards.

86-2.05A Material

Conduit and conduit fitting must be UL or ETL listed and comply with the following:

Conduit and Conduit Fitting Requirements

Type 1	Hot-dip galvanized rigid steel conduit and conduit couplings must comply with UL 6 and ANSI C80.1. Zinc coating testing must comply with copper sulfate test requirements in UL 6. Conduit couplings for rigid steel conduit must be electrogalvanized.
Type 2	Hot-dip galvanized rigid steel conduit must comply with requirements for Type 1conduit and be coated with polyvinyl chloride (PVC) or polyethylene. Exterior thermoplastic coating must have a minimum thickness of 35 mils. Internal coating must have a minimum thickness of 2 mils. Coated conduit must comply with UL 6; NEMA RN 1; or ETL PVC-001.
Type 3	Rigid non-metallic conduit must comply with UL 651, UL 651A or UL 651B. Install at underground locations only.
Type 4	Waterproof flexible metal conduit must consist of conduit with a waterproof non-metallic sunlight-resistant jacket over an inner flexible metal core. Type4 conduit must be UL listed for use as the grounding conductor.
Type 5	Intermediate steel conduit and conduit couplings must comply with UL 1242 and ANSI C80.6. Zinc coating testing must comply with copper sulfate test requirements in UL 1242. Conduit couplings for intermediate rigid steel conduit must be electrogalvanized. Type 5 conduit must only be used if specified.

Bonding bushings to be installed on metal conduit must be insulated and either galvanized or zinc alloy type.

Fittings for steel conduit and for watertight flexible metal conduit must be UL listed at UL 514B.

86-2.05B Use

Install Type 1 conduit on all exposed surfaces and at the following locations:

1. In concrete structures
2. Between a structure and nearest pull box

Exposed conduit installed on painted structure must be painted the same color as the structure.

Change or extend existing conduit runs using the same material. Install pull box if an underground conduit changes from the metallic type to Type 3.

Minimum trade size of conduit must be:

1. 1-1/2 inches from electrolier to adjacent pull box
2. 1 inch from pedestrian push button post to adjacent pull box
3. 2 inches from signal standard to adjacent pull box
4. 3 inches from controller cabinet to adjacent pull box
5. 2 inches from overhead sign to adjacent pull box
6. 1-1/2 inches if unspecified

Two conduits must be installed between controller cabinet and adjacent pull box.

86-2.05C Installation

Whether shop or field cut, ream ends of conduit to remove burrs and rough edges. Make cuts square and true. Slip joints and running threads are not allowed for coupling conduit. If a standard coupling cannot be used for coupling metal type conduit, use a threaded union coupling that is UL or ETL listed. Tighten couplings for metal conduit to maintain a good electrical connection through conduit run.

Cut Type 3 conduit with tools that will not deform the conduit. Use solvent weld for connections.

Cut Type 2 conduit with pipe cutters; do not use hacksaws. Coated conduit must be threaded with standard conduit-threading dies. Tighten conduit into couplings or fittings using strap wrenches or approved groove-joint pliers.

Protect shop-cut threads from corrosion as follows:

Shop-Cut Thread Protection

Steel conduit and conduit couplings	ANSI C80.1
Intermediate metal conduit and conduit couplings	ANSI C80.6

Paint conduits as specified in Section 91, "Paint." Apply 2 coats of approved unthinned zinc-rich primer of organic vehicle type. Do not use aerosol cans. Paint the following parts of conduits:

1. All exposed threads
2. Field-cut threads before installing conduit couplings to steel conduit
3. Damaged surfaces on metal conduit

Do not remove shop-installed conduit couplings.

Damaged Type 2 conduit or conduit coupling must be wrapped with at least 1 layer of 2 inch wide, 20 mil minimum thickness PVC tape, as specified in ASTM D 1000, with a minimum tape overlap of 1/2 inch. Before applying the tape, conduit or fitting must be cleaned and painted with 1 coat of rubber-resin based adhesive as recommended by the tape manufacturer. You may repair damaged spots in the thermoplastic coating by painting over with a brushing type compound supplied by the conduit manufacturer instead of the tape wrap.

The ends of Types 1, 2, or 5 conduit must be threaded and capped with standard pipe caps until wiring is started. The ends of Types 3 and 4 conduit must be capped until wiring is started. If caps are removed, replace with conduit bushings. Fit insulated bonding bushings on the end of metal conduit ending in pull box or foundation. Bell or end bushings for Type 3 conduit must be non-metallic type.

Conduit bends, except factory bends, must have a radius of not less than 6 times the inside diameter of the conduit. If factory bends are not used, bend the conduit without crimping or flattening using the longest radius practicable. Bend conduits as follows:

Conduit-Bending Requirements

Type 1	By methods recommended by the conduit manufacturer and with equipment approved for the purpose.
Type 2	Use standard bending tool designed for use on thermoplastic coated conduit. Conduit must be free of burrs and pits.
Type 3	By methods recommended by the conduit manufacturer and with equipment approved for the purpose. Do not expose conduit to direct flame.
Type 4	--
Type 5	By methods recommended by the conduit manufacturer and with equipment approved for the purpose.

Install pull tape in conduit that is to receive future conductors. The pull tape must be a flat woven lubricated soft-fiber polyester tape with a minimum tensile strength of 1,800 pounds and have printed sequential measurement markings every 3 feet. At least 2 feet of pull tape must be doubled back into the conduit at each end.

Existing underground conduit to be incorporated into a new system must be cleaned with a mandrel or cylindrical wire brush and blown out with compressed air.

Install conduit to a depth of not less than 30 inches below finished grade, except in sidewalk and curbed paved median areas, where it must be at least 18 inches below grade. You may lay conduit on existing pavement within new curbed median.

Conduit coupling must be a minimum of 6 inches from face of foundation.

Place a minimum of 2 inches of sand bedding in the trench before installing Type 2 or Type 3 conduit. Place a minimum of 4 inches of same material over conduit before placing additional backfill material.

Obtain approval from the Engineer before disturbing pavement. If obstruction is encountered, obtain approval from Engineer to cut small holes in the pavement to locate or remove obstruction If jacking or drilling method is used, keep jacking or drilling pit 2 feet away from edge of pavement. Pavement must not be weakened or subgrade softened from excess water use.

Conduit used for drilling or jacking must be removed; install new conduit for completed work. If a hole larger than the conduit is pre-drilled and you install conduit by hand or by method recommended by the conduit manufacturer with equipment approved for purpose, you may install Type 2 or Type 3 conduit under pavement.

If trenching in pavement method is specified, conduit installation under pavement that is not a freeway lane or freeway to freeway connector ramp, must comply with the following:

1. Use Type 3 conduit. Place conduit under pavement in a trench approximately 2 inches wider than the outside diameter of conduit, but not exceeding 6 inches in width. Trench depth must not exceed the greater of 12 inches or conduit trade size plus 10 inches, except that at pull boxes the trench may be hand dug to required depth. The top of the installed conduit must be a minimum of 9 inches below finished grade.
2. Trenching installation must be completed before placing final pavement layer.
3. Cut pavement to be removed with a rock cutting excavator. Minimize shatter outside the removal area.

4. Place conduit in bottom of trench and backfill with minor concrete as specified in Section 90-10, "Minor Concrete.". Minor concrete must contain a minimum of 590 pounds of cementitious material per cubic yard. If the trench is in asphalt concrete pavement and pavement overlay is not placed, backfill the top 1-3/4-inch of trench with minor HMA.
5. Before spreading HMA, apply tack coat as specified in Section 39, "Hot Mix Asphalt."
6. Backfill trenches, except for the top 0.10 foot, by the end of each day. The top 0.10 foot must be filled within 3 days after trenching.

Conduit installed beneath railroad tracks must be:

1. Type 1 or 2
2. 1-1/2-inch minimum diameter
3. Placed a minimum depth of 3 feet below bottom of tie

If jacking or drilling method is used, construct jacking pit to a minimum of 13 feet from the centerline of track at the near side of jacking pit. Cover jacking pit with substantial planking if left overnight.

Conduit ending in standard or pedestal must not extend more than 3 inches vertically above the foundation and must be sloped toward the handhole opening. Conduit entering through the side of non-metallic pull box must end inside the box within 2 inches of the wall and 2 inches above the bottom and be sloped toward the top of box to facilitate pulling of conductors. Conduit entering through the bottom of a pull box must end 2 inches above the bottom and be located near the end walls to leave the major portion of the box clear. At outlet, conduit must enter from the direction of the run.

Underground conduit runs, including under sidewalks, that are adjacent to gasoline service stations or other underground gasoline or diesel storage, piping, or pumps and that lead to a controller cabinet, circuit breaker panel, service, or enclosure where an arc may occur during normal operations must be sealed if the conduit is within the limits specified in the NEC for Class 1, Division 1. Use Type 1 or Type 2 conduit for these runs.

Conduit for future use in structures must be threaded and capped. Conduit leading to soffit, wall, or other lights or fixtures below pull box grade must be sealed and made watertight, except where conduit ends in a No. 9 or No. 9A pull box.

Support for conduit in or on wall or bridge superstructure must comply with the following:

1. Steel hangers, steel brackets, and other fittings must comply with Section 75-1.03, "Miscellaneous Bridge Metal."
2. Construct precast concrete conduit cradles using minor concrete and commercial quality welded wire fabric. Minor concrete must comply with Section 90-10, "Minor Concrete," and contain a minimum of 590 pounds of cementitious material per cubic yard.. The cradles must be moist cured for a minimum of 3 days. Bond precast concrete cradles to structure with epoxy adhesives specified in one of the following:

    2.1. Section 95-2.03, "Epoxy Resin Adhesive for Bonding New Concrete to Old Concrete"
    2.2. Section 95-2.04, "Rapid Set Epoxy Adhesive for Pavement Markers"
    2.3. Section 95-2.05, "Standard Set Epoxy Adhesive for Pavement Markers"

3. Use pipe sleeve or form opening for conduit through bridge superstructure concrete. Sleeve or opening through either prestressed member or conventionally reinforced precast member must be:

    3.1. Transverse to the member
    3.2. Through the web
    3.3. Not more than 3 inches maximum gross opening in concrete

4. Where conduits pass through the abutment concrete, wrap conduit with 2 layers of asphalt-felt building paper securely taped or wired in place. Fill space around conduit that runs through bridge abutment wall with mortar as specified in Section 51-1.135, "Mortar," except the proportion of cementitious material to sand must be 1 to 3. Fill the space around conduits that run through abutments after prestressing is completed.
5. Run surface-mounted conduit straight and true, horizontal or vertical on the wall, and parallel to wall on ceiling or other similar surfaces. Support conduit at a maximum of 5-foot intervals or closer where necessary to prevent vibration or unsightly deflection. The supports must include galvanized malleable iron conduit clamps and clamp backs secured with expansion anchorage devices as specified for concrete anchorage devices in Section 75-1.03,

   "Miscellaneous Bridge Metal." Threaded studs must be galvanized and be of the largest diameter that will pass through the mounting hole in conduit clamp.
6. Where pull boxes are placed in conduit runs, conduit must be fitted with threaded bushings and bonded.
7. Mark location of conduit end in structure, curb, or wall with a "Y" that is a minimum of 3 inches tall, directly above conduit.

86-2.05D Expansion Fittings

Install expansion fitting where the conduit crosses an expansion joint in structure. Each expansion fitting for metal conduit must include a copper bonding jumper having the ampacity specified in NEC.

Each expansion-deflection fitting for expansion joints of 1-1/2-inch movement rating must be watertight and include a molded neoprene sleeve, a bonding jumper, and 2 silicon bronze or zinc-plated iron hubs. Each fitting must allow a minimum of 3/4-inch expansion, contraction, and lateral deflection.

86-2.06 PULL BOXES

You may use a larger standard size pull box than that shown on the plans or specified. Pull box, cover, and extensions must be of the same material.

86-2.06A Materials

Pull box, cover, and extension for installation in ground or sidewalk area must be precast reinforced PCC or non-PCC material. Non-PCC material must:

1. Be fire resistant with a burn rate no greater than 0.3-inch per minute per 0.1 inch of thickness when tested as specified in ASTM D 635
2. Show no significant change in physical properties with exposure to weather
3. Be dense, free of voids or porosity, and gray or brown in color

Non-PCC pull box must comply with the following:

1. Top dimensions must not exceed the bottom dimensions by more than 1 inch.
2. Extension must be attached to pull box to maintain the minimum combined depths.
3. Cover must not fail and must not deflect more than 1/4 inch when a vertical force of 1,500 pounds is applied through a 1/2" x 3" x 6" steel plate to a non-PCC cover on a pull box. Center the steel plate on cover with its longitudinal axis coinciding with longitudinal axis of cover.

Non-PCC pull boxes must be of sufficient rigidity that when a designated concentrated force is applied perpendicularly to the midpoint of one of the long sides at the top while the opposite long side is supported by a rigid surface, it must be possible to remove the cover without the use of tools. The designated concentrated force must be 150 pounds for a No. 3-1/2 pull box and must be 100 pounds for a No. 5 or No. 6 pull box.

If a transformer or other device must be placed in a non-metallic pull box, include recesses for hanger.

Secure cover, except ceiling pull box cover, with 3/8-inch hold down bolts, cap screws, or studs, washers, and brass stainless steel or other non-corroding-metal nut. Stainless steel hardware must have an 18 percent or greater chromium content and an 8 percent or greater nickel content.

Galvanize ferrous metal parts as specified in Section 75-1.05, "Galvanizing."

Traffic pull box must be provided with steel cover and special concrete footing. Steel cover must have a embossed non-skid pattern.

Traffic pull box and cover must have a vertical proof-load strength of 25,000 pounds. Comply with Federal Specification RR-F-621 and distribute the 25,000 pound load through a 9" x 9" x 2" steel plate. You must be able to place the load anywhere on box and cover for 1 minute without causing cracks or permanent deformations.

No. 3-1/2(T) and No. 5(T) traffic pull box must be reinforced with a galvanized Z bar welded frame and cover similar to that shown on the plans for No. 6(T) pull box. Frame must be anchored to box with 1/4" x 2-1/4" concrete anchors. Four concrete anchors must be included for No. 3-1/2(T) pull box; one placed in each corner. Six concrete anchors for must be included for No. 5(T) and No. 6(T) pull boxes; one placed in each corner and one near the middle of each of the longer sides.

Hold down screws must be 3/8 inch hex flange cap screws of Type 316 stainless steel. Nut must be zinc plated carbon steel, vibration resistant, and have a wedge ramp at the root of the thread. Nut must be spot welded to the underside or manufactured with galvanized Z bar pull box frame.

Steel cover must be countersunk approximately 1/4 inch to accommodate bolt head. When tightened, bolt head must not exceed more than 1/8 inch above the top of cover. A 1/4 inch tapped hole and brass bonding screw must be included.

Concrete placed around and under traffic pull box must be minor concrete as specified in Section 90-10, "Minor Concrete."

86-2.06B Cover Marking

Marking must be clearly defined, uniform in depth, and parallel to either the long or short sides of cover.

Marking letters must be between 1 inch to 3 inch high.

Before galvanizing steel or cast iron cover, apply marking by one of the following methods:

1. Use cast iron strip at least 1/4-inch thick with letters raised a minimum of 1/16 inch. Fasten strip to cover with 1/4 inch flathead stainless steel machine bolts and nuts. Peen bolts after tightening.
2. Use sheet steel strip at least 0.027-inch thick with letters raised a minimum of 1/16 inch. Fasten strip to cover by spot welding, tack welding, or brazing, with 1/4 inch stainless steel rivets or 1/4 inch roundhead stainless steel machine bolts and nuts. Peen bolts after tightening.
3. Bead weld the letters on cover so that letters are raised a minimum of 3/32 inch.

86-2.06C Installation and Use

Space pull boxes no more than 200 feet apart. You may install additional pull boxes to facilitate the work.

Pull box in ground or sidewalk area must be installed as follows:

1. Embed bottom of pull box in crushed rock.
2. Place a layer of roofing paper on crushed rock.
3. Place mortar over layer of roofing paper. Mortar must be 0.50 inch to 1 inch thick and be sloped toward the drain hole.
4. Make a 1-inch drain hole in center of pull box through mortar and roofing paper.
5. Place mortar between pull box and pull box extension, and around conduits.

Reconstruct sump of existing pull box if disturbed by your operations. Remove old grout and replace with new if the sump was grouted.

After installation of traffic pull box, install steel cover and keep bolted down when your activities are not in progress at the pull box. When steel cover is placed for final time, cover and Z bar frame must be cleaned of debris and securely tightened.

86-2.07 (BLANK)

86-2.08 CONDUCTORS AND CABLES

Conductor must be copper wire that complies with ASTM B 3 and B 8.

Wire size must comply with the following:

Wire Size Requirements

Conductor usage	Requirement
In loop detector lead-in cable	ASTM B 286
Everywhere except in loop detector lead-in cable	American Wire Gage (AWG)[a]

[a]Except conductor diameter must not be less than 98 percent of specified AWG diameter.

Single conductor and cable, except detector lead-in cable, must have clear, distinctive, and permanent markings on the outer surface throughout its length. The markings must include the manufacturer's name or trademark, insulation type letter designation, conductor size, voltage, and temperature rating, and for cables, it must also include number of conductors.

86-2.08A Conductor Identification

Conductor insulation must be a solid color with a permanent stripe as specified below. The solid color must be homogeneous through the full depth of insulation. Identification stripe must be continuous throughout the length of conductor. For conductor sizes No. 2 and larger, the insulation may be black and the ends of the conductors must be taped for a minimum length of 20 inches with electrical insulating tape of the required color.

Conductor Identification

Circuit	Signal Phase or Function	Identification			Size
		Insulation Color[j]		Band Symbols[f]	
		Base	Stripe[a]		
Vehicle Signals[a,b,d]	2,6	Red, Yel, Brn	Blk	2,6	14
	4,8	Red, Yel, Brn	Ora	4,8	14
	1,5	Red, Yel, Brn	None	1,5	14
	3,7	Red, Yel, Brn	Pur	3,7	14
	Ramp Meter 1	Red, Yel, Brn	None	NBR	14
	Ramp Meter 2	Red, Yel, Brn	Blk	NBR	14
Pedestrian Signals[d]	2p,6p	Red, Brn	Blk	2p,6p	14
	4p,8p	Red, Brn	Ora	4p,8p	14
	1p,5p	Red, Brn	None	1p,5p	14
	3p,7p	Red, Brn	Pur	3p,7p	14
Pedestrian Push Buttons[d]	2p,6p	Blu	Blk	P-2,P-6	14
	4p,8p	Blu	Ora	P-4,P-8	14
	1p,5p	Blu	None	P-1,P-5	14
	3p,7p	Blu	Pur	P-3,P-7	14
Traffic Signal Controller Cabinet	Ungrounded Circuit Conductor	Blk	None	CON-1	6
	Grounded Circuit Conductor	Wht	None	CON-2	6
Highway Lighting Pull Box to Luminaire	Ungrounded-Line 1	Blk	None	NBR	14
	Ungrounded-Line 2	Red	None	NBR	14
	Grounded	Wht	None	NBR	14
Multiple Highway Lighting	Ungrounded-Line 1	Blk	None	ML1	10
	Ungrounded-Line 2	Red	None	ML2	10
Lighting Control	Ungrounded to PEU	Blk	None	C1	14
	Switching leg from PEU unit or SM transformer	Red	None	C2	14
Multiple Service	Ungrounded-Line 1 (Signals)	Blk	None	NBR[e]	6
	Ungrounded-Line 2 (Lighting)	Red[i]	None	NBR[e]	8
Sign Lighting[h]	Ungrounded-Line 1	Blk	None	SL-1	10
	Ungrounded-Line 2	Red	None	SL-2	10
Flashing Beacons[g]	Ungrounded between Flasher and Beacons	Red or Yel	None	F-Loc.[c]	14
Grounded and Common	Pedestrian Push Buttons	Wht	Blk	NBR	14
	Signals and Multiple Lighting	Wht	None	NBR	10
	Flashing Beacons and Sign Lighting	Wht	None	NBR	12
	Lighting Control	Wht	None	C-3	14
	Multiple Service	Wht	None	NBR	14
Railroad Preemption		Blk	None	R	14
Spares		Blk	None	NBR	14

NBR = No Band Required PEU=Photoelectric unit
[a]On overlaps, insulation is striped for 1st phase in designation. e.g., phase (2+3) conductor is striped as for phase 2.
[b]Band for overlap and special phases as required.
[c]Flashing beacons having separate service do not require banding.
[d]These requirements do not apply to signal cable.
[e]"S" if circuit is switched on line side of service equipment by utility.
[f]Band conductors in each pull box and near ends of termination points. On signal light circuits, a single band may be placed around 2 or 3 ungrounded conductors comprising a phase.
[g]Ungrounded conductors between service switch and flasher mechanism must be black and banded.
[h]Conductors between ballasts and sign lighting lamps must be No. 16 and color must correspond to the ballast leads.
[i]Black acceptable for size No. 2 and larger. Tape ends for 20 inches with indicated color.
[j]Color Code: Yel-Yellow, Brn-Brown, Blu-Blue, Blk-Black, Wht-White, Ora-Orange, Pur-Purple.

86-2.08B Multiple Circuit Conductors

Conductor for multiple circuit must be UL or ETL listed and rated for 600 V(ac) operation. Insulation for No. 14 to No. 4 conductors must be one of the following:

1. Type TW PVC as specified in ASTM D 2219
2. Type THW PVC
3. Type USE, RHH, or RHW cross-linked polyethylene

Minimum insulation thickness must comply with the following:

Insulation Thickness

Insulation Type	Conductor Size	Insulation Thickness (mils)
USE, RHH, or RHW	No. 14 to No. 10	39
	No. 8 to No. 2	51
THW or TW	No. 14 to No. 10	27
	No. 8	40
	No. 6 to No. 2	54

Insulation for No. 2 and larger conductor must be one of the types listed above or Type THWN. Conductor for wiring wall and soffit luminaire must be stranded copper with insulation rated for use at temperatures up to 125 °C.

86-2.08C Signal Cable

Signal cable, except for the 28-conductor type, must:

1. Not be spliced
2. Be marked in each pull box with the signal standard information it is connecting to

Signal cable must comply with the following:

1. Cable jacket must be:

    1.1. Black polyethylene with an inner polyester binder sheath
    1.2. Rated for 600 V(ac) and 75 °C

2. Filler material, if used, must be polyethylene material.
3. Conductor must be solid copper with Type THWN insulation as specified in Section 86-2.08, "Conductors and Cables," and ASTM B 286. The minimum thickness of Type THWN insulation must be 12 mils for conductor sizes No. 14 to No. 12 and 16 mils for conductor size No. 10. The minimum thickness of nylon jacket must be 4 mils.

Conductor Signal Cable Requirements

Cable Type[a]	Conductor Quantity and Type	Cable Jacket Thickness (mils)		Maximum Nominal Outside Diameter (inch)	Conductor Color Code	Remarks
		Average	Minimum			
3CSC	3 - No. 14	44	36	0.40	blue/black, blue/orange, white/black stripe	Use for pedestrian push buttons and spare
5CSC	5 - No. 14	44	36	0.50	red, yellow, brown, black, white	
9CSC	8 - No. 14 1 - No. 12	60	48	0.65	No. 12 - white No. 14 - red, yellow, brown, black, and red/black, yellow/black, brown/black, white/black stripe	
12CSC	11 - No. 14 1 - No. 12	60	48	0.80	No. 12 - white No. 14 - see "12CSC Color Code and Functional Connection" table	Use for vehicle signals, pedestrian signals, spares, and signal common
28CSC	27 - No. 14 1 - No. 10	80	64	0.90	No. 10 - white No. 14 - see "28CSC Color Code and Functional Connection" table	Keep signal commons in each cable separate except at the signal controller. Label each cable as "C1" or "C2" in pull box. Use "C1" for signal phases 1, 2, 3, and 4. Use "C2" for phases 5, 6, 7, and 8.

[a]Conductor signal cable description starts with the number of conductors, followed by "CSC". (e.g., a signal cable with 3 conductors is labeled "3CSC.")

12CSC Color Code and Functional Connection

Color Code	Termination	Phase
Red	Vehicle signal red	2, 4, 6, or 8
Yellow	Vehicle signal yellow	2, 4, 6, or 8
Brown	Vehicle signal green	2, 4, 6, or 8
Red/black stripe	Vehicle signal red	1, 3, 5, or 7
Yellow/black stripe	Vehicle signal yellow	1, 3, 5, or 7
Brown/black stripe	Vehicle signal green	1, 3, 5, or 7
Black/red stripe	Spare, or use as required for red or DONT WALK	
Black/white stripe	Spare, or use as required for yellow	
Black	Spare, or use as required for green or WALK	
Red/white stripe	Ped signal DONT WALK	
Brown/white stripe	Ped signal WALK	

28CSC Color Code and Functional Connection

Color Code	Termination	Phase
Red/black stripe	Vehicle signal red	2 or 6
Yellow/black stripe	Vehicle signal yellow	2 or 6
Brown/black stripe	Vehicle signal green	2 or 6
Red/orange stripe	Vehicle signal red	4 or 8
Yellow/orange stripe	Vehicle signal yellow	4 or 8
Brown/orange stripe	Vehicle signal green	4 or 8
Red/silver stripe	Vehicle signal red	1 or 5
Yellow/silver stripe	Vehicle signal yellow	1 or 5
Brown/silver stripe	Vehicle signal green	1 or 5
Red/purple stripe	Vehicle signal red	3 or 7
Yellow/purple stripe	Vehicle signal yellow	3 or 7
Brown/purple stripe	Vehicle signal green	3 or 7
Red/2 black stripes	Ped signal DONT WALK	2 or 6
Brown/2 black stripes	Ped signal WALK	2 or 6
Red/2 orange stripes	Ped signal DONT WALK	4 or 8
Brown/2 orange stripes	Ped signal WALK	4 or 8
Red/2 silver stripes	Overlap A, C red	OLA, OLC
Brown/2 silver stripes	Overlap A, C green	OLA, OLC
Red/2 purple stripes	Overlap B, D red	OLB, OLD
Brown/2 purple stripes	Overlap B, D green	OLB, OLD
Blue/black stripe	Ped push button	2 or 6
Blue/orange stripe	Ped push button	4 or 8
Blue/silver stripe	Overlap A, C yellow	OLA(y), OLC(y)
Blue/purple stripe	Overlap B, D yellow	OLB(y), OLD(y)
White/black stripe	Ped push button common	
Black/red stripe	Railroad preemption	
Black	Spare	

86-2.08D Signal Interconnect Cable (SIC)

Signal interconnect cable must be a 3-pair or 6-pair type with stranded tinned copper No. 20 conductors. Each conductor insulation must be 13 mils minimum nominal thickness, color-coded, polypropylene material. Conductors must be in twisted pairs. Color coding distinguishes each pair. Each pair must be wrapped with an aluminum polyester shield and must have a No. 22 or larger stranded tinned copper drain wire inside the shielded pair.

Cable jacket must be black, high density polyethylene, rated for a minimum of 300 V(ac) and 60 °C, and must have a minimum nominal wall thickness of 40 mils. Cable jacket or moisture-resistant tape directly under the outer jacket must be marked as specified in Section 86-2.08.

You must have a minimum of 6 feet of slack at each controller cabinet. Splicing is allowed only if shown on the plans.

Insulate conductor splice with heat-shrink tubing and overlap at least 0.6 inch. Cover overall cable splice with heat-shrink tubing and overlap the cable jacket at least 1-1/2 inch.

86-2.09 WIRING

Run conductors in conduit, except for overhead and temporary installations and where conductors are run inside poles.

Solder by hot iron, pouring, or dipping method, connectors and terminal lugs for conductor sizes No. 8 and smaller. Do not perform open-flame soldering.

86-2.09A Circuitry

Do not run traffic signal indication conductors to a terminal block on a standard unless connected to a mounted signal head.

Use only 1 conductor to connect to each terminal of a pedestrian push button.

The common for pedestrian push button circuit must be separate from traffic signal circuit grounded conductor.

86-2.09B Installation

Use a UL- or ETL-listed inert lubricant for placing conductors in conduit.

Pull conductors into conduit by hand using pull tape specified in Section 86-2.05C, "Installation." Do not use winches or other power-actuated pulling equipment.

If adding new conductors or removing existing conductors, remove all conductors, clean conduit as specified in Section 86-2.05C, "Installation," and pull all conductors in conduit as 1 unit.

If traffic signal conductors are run in lighting standard containing street lighting conductors from a different service point, you must encase the traffic signal conductors or the lighting conductors with a flexible or rigid metal conduit for a length until the 2 types of conductors are no longer in the same raceway.

If less than 10 feet above grade, enclose temporary conductors in flexible or rigid metal conduit.

Leave slack for each conductor as follows:

Conductor Slack Requirements

Location	Slack (feet)
Signal standard	1
Lighting standard	1
Signal and lighting standard	1
Pull box	3
Splice	3
Standards with slip base	0

After conductors are installed, seal ends of conduits with an approved sealing compound.

To form a watertight seal, tape ends of spare conductors and conductors ending in pull boxes.

Conductors and cables inside fixture or cabinet must be neatly arranged and tied together by function with self-clinching nylon cable ties or enclosed in plastic tubing or raceway.

Identify conductors for:

1. Signal overlap phase as specified for vehicle signals in the table titled "Conductor Identification."
2. Metered and unmetered conductors occupying the same pull box. Identify unmetered circuit conductors with "UNMETERED-STREET LTG," or "UNMETERED-COUNT STATION."

Permanently identify conductors by function. Place identification on each conductor, or each group of conductors forming a signal phase, at each pull box and near the end of conductors.

Label, tag, or band conductors by mechanical methods. Identification must not move along the conductors.

86-2.09C Connectors and Terminals

Connectors and terminals must be UL- or ETL-listed crimp type. Use manufacturer-recommended tool for connectors and terminals to join conductors. Comply with MIL-T-7928.

Terminate stranded conductors smaller than No. 14 in crimp style terminal lugs.

86-2.09D Splicing and Terminations

Splices are allowed for:

1. Grounded conductors in pull box.
2. Pedestrian push button conductors in pull box.
3. Conductors in pull box adjacent to each electrolier or luminaire.
4. Ungrounded traffic signal conductors in pull box, if traffic signals are modified.
5. Ungrounded traffic signal conductors to a terminal compartment or signal head on a standard with conductors of the same phase in the pull box adjacent to the standard.
6. Ungrounded lighting circuit conductors in pull box, if lighting circuits are modified.

86-2.09E Splice Insulation

Splice must function under continuous submersion in water.

Multi-conductor cable must be spliced and insulated to form a watertight joint and to prevent moisture absorption by the cable.

Low-voltage tape must be:

1. UL or ETL listed
2. Self-fusing, oil and flame-resistant, synthetic rubber
3. PVC, pressure-sensitive adhesive of 6 mils minimum thickness

Insulating pad must be a combination of an 80-mils thick electrical grade PVC laminate and a 120-mils thick butyl splicing compound with removable liner.

Heat-shrink tubing must comply with the following:

1. Be medium or heavy wall thickness, irradiated polyolefin tubing with an adhesive mastic inner wall.
2. Before contraction, minimum wall thickness must be 40 mils.
3. Heating must be as recommended by the manufacturer. Do not perform open-flame heating.
4. When heated, the inner wall must melt and fill crevices and interstices of the covered object and the outer wall must shrink to form a waterproof insulation.
5. After contraction, each end of the heat-shrink tubing or the open end of end cap of heat-shrink tubing must overlap the conductor insulation at least 1-1/2 inches. Coat ends and seams with electrical insulation coating.

6. Comply with requirements for extruded insulated tubing at 600 V(ac) in UL Standard 468D and ANSI C119.1, and the following requirements:

Heat-Shrink Tubing Requirements

Shrinkage Ratio	33 percent, maximum, of supplied diameter when heated to 125 °C and allowed to cool to 25 °C
Dielectric Strength	350 kV per inch, minimum
Resistivity	25^{13} Ω per inch, minimum
Tensile Strength	2,000 psi, minimum
Operating Temperature	-40 °C to 90 °C (135 °C in emergency)
Water Absorption	0.5 percent, maximum

7. If 3 or more conductors are to be enclosed in 1 splice, place mastic around each conductor before placing inside tubing. Use mastic type recommended by heat-shrink tubing manufacturer.

You may use "Method B" as an alternative method for splice insulation. Use at least 2 thicknesses of electrical insulating pad. Apply pad to splice as recommended by manufacturer.

86-2.095 FUSED SPLICE CONNECTORS

Install a fused disconnect splice connector in each ungrounded conductor, between the line and the ballast, in the pull box adjacent to each luminaire. Connector must be accessible in the pull box.

For 240 and 480 V(ac) circuits, each connector must simultaneously disconnect both ungrounded conductors. Connector must not have exposed metal parts, except for the head of stainless steel assembly screw. Recess head of stainless steel assembly screw a minimum of 1/32 inch below top of plastic boss that surrounds the head.

Splice connector must protect fuse from water or weather damage. Contact between fuse and fuseholder must be spring loaded. Splice connector terminals must be:

1. Rigidly crimped, using a tool recommended by manufacturer of fused splice connector, onto ungrounded conductors
2. Insulated
3. Watertight

Fuses must be standard midget ferrule type, with "Non-Time-Delay" feature, and 13/32" x 1-1/2".

86-2.10 BONDING AND GROUNDING

Secure all metallic components, mechanically and electrically, to form a continuous system that is effectively grounded.

Bonding jumper must be copper wire or copper braid of the same cross sectional area as a No. 8 or larger to match the load. Equipment grounding conductors must be color coded as specified in NEC or be bare.

Attach bonding jumper to standard as follows:

Bonding Jumper Attachment

Standard type	Requirements
Standard with handhole and traffic pull box lid cover	Use UL-listed lug and 3/16-inch diameter or larger brass or bronze bolt. Run jumper to conduit or bonding wire in adjacent pull box. Grounding jumper must be visible after the standard is installed and mortar pad is placed on foundation.
Standard without handhole	Use UL-listed ground clamp on each anchor bolt.
Slip-base standard	Use UL-listed ground clamp on each anchor bolt or attach UL-listed lug to bottom slip-base plate with 3/16-inch diameter or larger brass or bronze bolt.

Ground one side of secondary circuit of step-down transformer.

Ground metal conduit, service equipment, and grounded conductor at service point as specified by NEC and service utility, except grounding electrode conductor must be No. 6 or larger.

Equipment bonding and grounding conductors are required in conduit. Run a No. 8 minimum bare copper wire continuously in conduit system. The bonding wire must be sized as specified in the NEC.

Ground electrode must be:

1. 1 piece
2. 10-foot minimum length of one of the following:

    2.1. Galvanized steel rod or pipe not less than 3/4 inch in diameter
    2.2. Copper clad steel rod not less than 5/8 inch in diameter

3. Installed as specified in NEC
4. Bonded to service equipment using one of the following:

    4.1. Ground clamp
    4.2. Exothermic weld
    4.3. No. 6 or larger copper conductor

On wood pole, metallic equipment mounted less than 8 feet above ground surface must be grounded.

Bond metallic conduit in non-metallic pull box using bonding bushing or bonding jumper.

Bond metallic conduit in metal pull box using bonding bushings and bonding jumpers connected to bonding wire running in the conduit system.

86-2.11 SERVICE

Electrical service installation and materials must comply with service utility requirements.

If service equipment is to be installed on utility-owned pole, you must furnish and install conduit, conductors, and other necessary material to complete service installation. Service utility will decide riser and equipment position.

Install service equipment early on to allow service utility to schedule its work before project completion.

Furnish each service with a circuit breaker that simultaneously disconnects all ungrounded service entrance conductors.
Circuit breakers must:

1. Be quick-break on either automatic or manual operation.
2. Have operating mechanism that is enclosed and trip-free from operating handle on overload.
3. Be trip indicating.
4. Have frame size plainly marked.
5. Have trip rating clearly marked on operating handle.
6. Have overload tripping of breakers not influenced by ambient temperature range of -18 °C to 50 °C.
7. Be internal trip type.
8. Be UL or ETL listed and comply with UL 489 or equal.
9. Have minimum interrupting capacity of 10,000 A, rms, if used as service disconnect.

Service equipment enclosure must be a NEMA 3R enclosure with dead-front panel and a hasp with a 7/16-inch hole for a padlock. Enclosure must be field marked as specified in the NEC to warn qualified persons of potential electric arc flash hazards.

Service equipment enclosure, except Types II and III, must be galvanized or have a factory-applied rust-resistant prime coat and finish coat.

Types II and III service equipment enclosures must be manufactured from one of the following:

1. Galvanized sheet steel
2. Sheet steel plated with zinc or cadmium after manufacturing
3. Aluminum

Manufacture service equipment enclosure as specified in Section 86-3.04A, "Cabinet Construction." Overlapping exterior seams and doors must comply with requirements for NEMA 3R enclosures in the NEMA Enclosure Standards.

If an alternative design is proposed for Type II or III service equipment enclosure, submit plans and shop drawings to the Engineer for approval before manufacturing.

Except for falsework lighting and power for your activities, when you submit a written request, the Engineer will arrange:

1. With the service utility to complete service connections for permanent installations and the Department will pay all costs and fees required by the service utility. Submit request at least 15 days before service connections are required.
2. For furnishing electrical energy. Energy used before contract completion will be charged to you, except cost of energy used for public benefit as ordered by the Engineer will be paid by the Department or local authorities.

Full compensation for furnishing and installing State-owned or permanent service poles, service equipment, conduit, conductors, and pull boxes, including equipment, conduit, and conductors placed on utility-owned poles, is included in the contract item of electrical work involved and no additional compensation will be allowed therefor.

If the service point is indeterminate and is shown on the plans as "approximate location" or "service point not yet established," the labor and materials required for making the connection between the service point, when established, and the nearest pull box shown on the plans will be paid for as extra work as specified in Section 4-1.03D, "Extra Work."

86-2.12 WOOD POLES

Wood poles must comply with the following:

1. Class 5 or larger as specified in ANSI O 5.1
2. Less than 180-degree twist in grain over the full length
3. 4-inch or less sweep
4. Beveled top
5. Placed in ground at least 6 feet
6. Length must be:

    6.1. 25 feet for service pole
    6.2. 35 feet for other

After each pole is set in ground, backfill space around pole with selected earth or sand, free of rocks and other deleterious material, placed in 4-inch thick layers. Moisten each layer and thoroughly compact.

Manufacture mast arm from standard pipe, free from burrs. Each mast arm must have an insulated wire inlet and wood pole mounting brackets for mast arm and tie-rod cross arm. Manufacture tie rod from structural steel and pipe.

Mount mast arm for luminaire to provide a 34-foot mounting height for a 200 W high pressure sodium luminaire and 40-foot mounting height for 310 W high pressure sodium luminaire. Traffic signals and flashing beacons on mast arm must provide a minimum vertical clearance of 17 feet from bottom of equipment to pavement.

After manufacturing, pressure-treat pole as specified in Section 58, "Preservative Treatment of Lumber, Timber and Piling," and AWPA Use Category System: UC4B, Commodity Specification D.

If specified, treat pole with waterborne wood preservative.

86-2.13 LIGHTING AND SIGN ILLUMINATION CONTROL

Enclosure for the circuit breaker for lighting and sign illumination control must:

1. Be NEMA 3R
2. Be galvanized, cadmium plated, or powder-coated
3. Include dead front panel and a hasp with a 7/16 inch diameter hole for padlock

86-2.14 TESTING

86-2.14A Materials Testing

Deliver material and equipment to be tested to either the Transportation Laboratory or a testing location ordered by the Engineer.

Allow 30 days for acceptance testing from the time material or equipment is delivered to test site. You must pay for all shipping, handling, and related transportation costs associated with testing. If equipment is rejected, you must allow 30 days for retesting. Retesting period starts when corrected equipment is delivered to test site. You must pay for all retesting costs. Delays resulting from submittal of non-compliant materials do not relieve you from executing the contract within the allotted time.

If equipment submitted for testing does not comply with specifications, remove the equipment within 5 business days after notification that the equipment is rejected. If equipment is not removed within that period, it may be shipped to you at your expense.

When testing is complete, you will be notified. You must pick up the equipment at the test site and deliver it to the job site.

Testing and quality control procedures for all other traffic signal controller assemblies must comply with NEMA TS Standards for Traffic Control Systems.

86-2.14B Field Testing

Before starting functional testing, perform the following tests in the presence of the Engineer:

86-2.14B(1) Continuity

Test each circuit for continuity.

86-2.14B(2) Ground

Test each circuit for grounds.

86-2.14B(3) Insulation Resistance

Perform insulation resistance test at 500 V(dc) on each circuit between the circuit and a ground. Insulation resistance must be 10 MΩ minimum on all circuits, except for inductive loop detector circuits that must have an insulation resistance value at least 100 MΩ.

86-2.14C Functional Testing

Test periods must comply with Section 86-1.07, "Scheduling of Work."

Acceptance of new or modified traffic signal will be made only after all traffic signal circuits have been thoroughly tested.

Perform functional test to show that each part of the system functions as specified.

Functional test for each new or modified system must include at least 5 business days of continuous, satisfactory operation. If unsatisfactory performance of the system occurs, the condition must be corrected and the system retested until the 5 business days of continuous, satisfactory operation is obtained.

Except for new or modified parts of existing lighting circuit and sign illumination system, the State or local agency will maintain the system during test period and pay the electrical energy cost. Except for electrical energy, you must pay the cost of necessary maintenance performed by the State or local agency on new circuits or on the portions of existing circuits modified under the contract.

Shutdown of electrical system caused by traffic from a power interruption or from unsatisfactory performance of State-furnished materials does not constitute discontinuity of the functional test.

86-2.15 GALVANIZING

Galvanize as specified in Section 75-1.05, "Galvanizing." Cabinet material may be galvanized before manufacturing as specified in ASTM A 653/653M, Coating Designation G 90.

Steel pipe standard and pipe mast arm must be hot-dip galvanized after manufacturing and must comply with Section 75-1.05, "Galvanizing." . Remove spikes from galvanized surfaces.

A minimum of 10 inches of upper end of anchor bolts, anchor bars or studs, and nuts and washers must be galvanized as specified in Section 75-1.05, "Galvanizing."

After galvanizing, bolt threads must accept galvanized standard nuts without requiring tools or causing removal of protective coatings.

Galvanizing existing materials in an electrical installation will not be required.

86-2.16 PAINTING

Paint electrical equipment and material as specified in Section 59, "Painting," and the following:

1. Use paint material specified in Section 91, "Paint."

2. Factory or shop cleaning methods for metals are acceptable if equal to the methods specified.
3. Instead of temperature and seasonal restrictions for painting as specified in Section 59, "Painting," paint may be applied to equipment and materials for electrical installations if ordered by the Engineer.
4. Ungalvanized ferrous surface to be painted must be cleaned before applying prime coat. Blast cleaning is not required.
5. If an approved prime coat is applied by manufacturer, and in good condition, the 1st primer application is not required.
6. Existing equipment to be painted in the field, including State-furnished equipment, must be washed with a stiff bristle brush using a solution of water containing 2 tablespoons of heavy duty detergent powder per gallon. After rinsing, surface must be wire-brushed with a coarse, cup-shaped, power-driven brush to remove badly bonded paint, rust, scale, corrosion, grease, or dirt. Dust or residue remaining after wire brushing must be removed before priming.
7. Do not paint galvanized metal guard post, galvanized equipment, State-furnished controller cabinet, and wood poles for traffic signal or flashing beacon.
8. New galvanized metal surface to be painted in the field must be cleaned as specified for existing equipment before applying the prime coat. Do not wire brush new galvanized surface.
9. After erection, examine exterior surface for damaged primer, clean, and spot coat with primer.
10. Paint Types II and III steel service equipment enclosures with a polymeric or an enamel coating system matching Color No. 14672, light green, of Federal Standard 595B. Coating must be commercially smooth and free of flow lines, paint washout, streaks, blisters, and other defects that would impair serviceability or detract from general appearance. Coating must comply with the following:

    10.1. Coating hardness - Finish must have pencil lead hardness of HB, minimum, using an Eagle Turquoise pencil.
    10.2. Salt spray resistance - Undercutting coating system's film must not exceed 1/8-inch average, from lines scored diagonally and deep enough to expose the base metal, after 336 hours of exposure in a salt spray cabinet complying with ASTM B 117.
    10.3. Adherence - Must not have coating loss when tested as specified in California Test 645. Perform testing by applying coating to 4" x 8" x 0.024" test specimens of the same material as the cabinet, using the same application method.

11. Finish interior of metal signal visor, louver, and front face of back plates with 2 applications of lusterless black exterior grade latex paint formulated for application to properly prepared metal surface. Good condition factory finish will be acceptable.
12. Finish metal signal section, signal head mounting, brackets and fittings, outside of visor, pedestrian push button housing, pedestrian signal section and visor, and back face of back plate with 2 applications of lusterless black or dark olive green exterior grade latex paint formulated for application to properly prepared metal surface. Match dark olive green color to Color Chip No. 68 filed at the Transportation Laboratory.
13. Prepare and finish conduit and conduit fitting above ground the same as adjacent standard or post.
14. Relocated, reset or modified equipment previously finished as specified in this section, except for previously-finished galvanized standard with traffic signal yellow enamel, must be given a spot finishing application on newly primed areas and 1 finishing application over the entire surface. If signal face or mounting brackets are required to be painted under this section, all signal faces and mounting brackets on the same mounting must be repainted.

15. Small rusted or repaired areas of relocated or reset galvanized equipment must be cleaned and painted as specified in Section 75-1.05, "Galvanizing," for repairing damaged galvanized surfaces.
16. Stencil equipment number neatly on the standard or adjacent structure. Obtain number from the Engineer.
17. Perform painting neatly. The Engineer reserves the right to require use of brushes if the work performed by paint spraying machine is unsatisfactory.

86-3 CONTROLLER ASSEMBLIES

86-3.01 CONTROLLER ASSEMBLIES

A controller assembly houses a complete mechanism for controlling the operation of traffic signals or other systems.

Model 170 and Model 2070, specified as a Model 170/2070 controller assembly, includes a Model 170, 170E or 2070 controller unit, a wired cabinet, and all auxiliary equipment required to control the system.

86-3.02 (BLANK)

86-3.03 (BLANK)

86-3.04 CONTROLLER CABINETS

Controller cabinets for controller assemblies other than Model 170/2070 must comply with the following:

86-3.04A Cabinet Construction

Cabinet must be rainproof and the top crowned 1/2 inch or slanted toward the back to prevent standing water.

Cabinet and door must be manufactured from one of the following:

1. 0.073-inch minimum thickness cold-rolled steel with continuously-welded exterior seams
2. 0.073-inch minimum thickness stainless steel with overlapping exterior seams complying with Type 4 enclosures of the NEMA Enclosure Standards
3. 0.125-inch minimum thickness aluminum with continuously-welded exterior seams

Exterior welds must be ground smooth and edges filed to a radius of at least 0.03 inch.

Cabinet manufactured from cold-rolled steel must comply with Section 86-2.16, "Painting," and the following:

1. Cabinet manufactured from cold-rolled steel must be finished with a polymeric or an enamel coating system conforming to Color No. 14672 of Federal Standard 595B.
2. Cabinet must not have coating loss when 2 test specimens, 4" x 8", of the same material and coating as the cabinet are tested. Two 9-inch-diagonal scratches exposing bare metal will be made on a specimen. Soak specimen in demineralized water for 192 hours. Tightly affix a 1-inch wide strip of masking tape to the surface and remove with one quick motion. Specimen showing evidence of blistering, softening, or peeling of paint or coating from the base metal will be rejected. Testing must comply with California Test 645, except passing 180 Degree Bend Test is not required.
3. Metal must be prepared by the 3-step, iron phosphate conversion coating bonderizing technique.
4. Inside walls, doors, and ceiling of the housing must be the same as the outside finish.

Cabinet manufactured from stainless steel must comply with the following:

1. Use annealed or quarter-hard stainless steel that complies with ASTM A 666 for Type 304, Grades A or B.
2. Use gas tungsten arc welding (GTAW) process with bare stainless steel welding electrodes. Electrodes must comply with AWS A5.9 for ER308 chromium-nickel bare arc welding electrodes.
3. Procedures, welder, and welding operator must comply with requirements and practices recommended in AWS C5.5.
4. Ground or brush exposed, exterior surfaces of stainless steel cabinet to a 25 to 50-microinch finish using iron-free abrasives or stainless steel brushes.
5. After grinding or brushing, cabinet must not show rust discoloration when:

    5.1. Exposed for 48 hours in a salt spray cabinet as specified in ASTM B 117
    5.2. Exposed 24 hours in a tap water spray cabinet with the water temperature between 38 °C and 45 °C

6. After the test, cabinet showing rust discoloration anywhere on its surface will be rejected. Rejected cabinets may be cleaned, passivated, and resubmitted for testing.

Cabinet manufactured from aluminum sheet must comply with ASTM B 209 or B 209M for 5052-H32 aluminum sheet, and the following:

1. Use gas metal arc welding (GMAW) process with bare aluminum welding electrodes. Electrodes must comply with AWS A5.10 for ER5356 aluminum alloy bare welding electrodes.
2. Procedures, welder, and welding operator for welding must comply with requirements in AWS B3.0, "Welding Procedure and Performance Qualification," and to practices recommended in AWS C5.6.
3. Surface finish of each aluminum cabinet must comply with MIL-A-8625 for a Type II, Class I coating, except anodic coating must have a minimum thickness of 0.0007 inch and a minimum coating weight of 0.001 ounce per square inch. The anodic coating must be sealed in a 5 percent aqueous solution of nickel acetate, pH 5.0 to 6.5, for 15 minutes at 97 °C. Before applying anodic coating, clean and etch cabinets using the steps below:

    3.1. Clean by immersing into inhibited alkaline cleaner, Oakite 61A, Diversey 909, or equal, 6 to 8 ounces per gallon at 71 °C for 5 minutes.
    3.2. Rinse in cold water.
    3.3. Etch in solution of 1-1/2 ounce of sodium fluoride and 4 to 6 ounces of sodium hydroxide per gallon of distilled water at 60 °C to 65 °C for 5 minutes.
    3.4. Rinse in cold water.
    3.5. Immerse in 50 percent by volume nitric acid solution at room temperature for 2 minutes.
    3.6. Rinse in cold water.

Cabinet must have:

1. Single front door with:

    1.1. 44-inch maximum door width.
    1.2. Lock, when closed and latched, that is locked.

1.3. Police panel mounted on door, equipped with a keyed lock and 2 police keys. Each police key must have a shaft at least 1-3/4 inch in length.

2. Dust-tight gasketing on all door openings, permanently bonded to the metal. Mating surface of the gasketing must be covered with silicone lubricant to prevent sticking.
3. Handle that:

3.1. Allows padlocking in closed position
3.2. Has a minimum length of 7 inches
3.3. Has a 5/8-inch, minimum, steel shank
3.4. Is manufactured of cast aluminum, or zinc-plated or cadmium-plated steel

4. Cabinet door frame with:

4.1. Latching mechanism that:

4.1.1. Holds tension on and forms a firm seal between door gasketing and frame.
4.1.2. Is a 3-point cabinet latch with nylon rollers that have a minimum diameter of 3/4 inch and equipped with ball bearings.
4.1.3. Has a center catch and a pushrod made of zinc-plated or cadmium-plated steel. Pushrod must be at least 1/4" x 3/4" and turned edgewise at outer supports. Cadmium plating must comply with MIL-QQ-416. Zinc plating must comply with MIL-QQ-325.

4.2. Hinging that:

4.2.1. Has 3-bolt butt hinges, each having a stainless steel fixed pin. Hinges must be stainless steel or may be aluminum for aluminum cabinet.
4.2.2. Is bolted or welded to the cabinet. Hinge pins and bolts must not be accessible when door is closed.
4.2.3. Has a catch to hold the door open at 90 degrees and 180 degrees, ± 10 degrees, if a door is larger than 22 inches in width or 6 square feet in area. Catch must be at least 3/8-inch diameter, stainless steel plated rod capable of holding door open at 90 degrees in a 60 mph wind at an angle perpendicular to the plane of the door.

5. Lock that:

5.1. Is solid brass, 6-pin tumbler, rim type
5.2. Has rectangular, spring-loaded bolts
5.3. Is left hand and rigidly mounted with stainless steel machine screws approximately 2 inches apart
5.4. Extends 1/8 to 3/8 inch beyond the outside surface of door

6. 2 keys that are removable in the locked and unlocked positions.
Submit alternative design details for review and approval before manufacturing cabinet.
Use metal shelves or brackets that will support controller unit and auxiliary equipment.
Machine screws and bolts must not protrude outside the cabinet wall.

86-3.04B Cabinet Ventilation

Each controller cabinet must have:

1. 8 screened, 1/2-inch diameter or larger, raintight vent holes, in lower side or bottom of cabinet. You may use louvered vents with a permanent metal mesh or 4-ply woven polypropylene air filter held firmly in place, instead.
2. Electric fan with ball or roller bearings and capacity of at least 100 cubic feet per minute. Fan must be thermostatically controlled and manually adjustable to turn on between 32 °C and 65 °C with a differential of not more than 6 °C between automatic turn on and turn off. Fan circuit must be fused at 125 percent of ampacity of installed fan motor.

Fan and cabinet vent holes must be positioned to direct bulk of airflow over controller unit or through ventilating holes of controller unit.

86-3.04C Cabinet Wiring

Conductors used in controller cabinet wiring must:

1. Be neatly arranged and laced, or enclosed in plastic tubing or raceway.
2. End with properly sized captive or spring-spade terminal or be soldered to a through-panel solder lug on the back side of the terminal block. Apply crimp-style connector with proper tool to prevent opening of handle until crimp is completed.

Controller cabinet must have an equipment grounding conductor bus that is grounded to the cabinet and connected to metal conduit system or other approved ground with a No. 8, or larger, grounding conductor.

With all cabinet equipment in place and connected, resistance between grounded conductor terminal bus and equipment grounding conductor bus must be 50 MΩ, minimum, when measured with an applied voltage of 150 V(dc).

If direct current is to be grounded, connect to equipment ground only.

Use two or more terminal blocks for field connection. Install field terminal within 22 inches from front of cabinet and orient for screwdriver operation. Terminal must be a minimum of 5 inches above foundation.

No more than 3 conductors per terminal are allowed. Two flat metal jumpers, straight or U shaped, may be placed under terminal screw. At least 2 full threads of terminal screws must be fully engaged when screw is tightened. Live parts must not extend beyond the barrier.

86-3.05 CABINET ACCESSORIES

86-3.05A Labels

Include permanently printed, engraved, or silk-screened label for equipment and removable items of equipment.

Labeling must match cabinet wiring diagram. Label for shelf-mounted equipment must be on shelf face below item. Label for wall-mounted equipment must be below item.

86-3.05B Convenience Receptacle

Mount convenience receptacle in a readily accessible location inside the cabinet.

Convenience receptacle must be a duplex, 3-prong, NEMA 5-15R grounding type outlet that complies with UL Standard 943.

86-3.05C Surge Arrestor

Surge arrestor must reduce effects of power line voltage transients and have ratings as follows:

Surge Arrestor Requirements

Recurrent peak voltage	184 V(ac)
Energy rating, maximum	20 J
Power dissipation, average	0.85 W
Peak current for pulses less than 7 µs	1,250 A

Standby current must be 1 mA or less for 120 V(ac), 60 Hz sinusoidal input.

86-3.05D Terminal Blocks

Terminal block must be rated 600 V(ac), minimum, and have nickel-, silver-, or cadmium-plated brass binder head screw terminal.

Heavy duty terminal block must be rated at 20 A and have 12 position with No. 10 x 5/16-inch nickel-plated brass binder head screws and nickel-plated brass inserts. Each position must have 2 screw-type terminals. Terminal block must be barrier type with shorting bars in each of the 12 positions, and must have integral type marking strips.

Light duty terminal block must be rated at 5 A and have 12 positions with No. 6 x 1/8 inch binder head screws. Each position must have 1 screw-type terminal.

86-3.06 COMPONENTS

86-3.06A Toggle Switches

Toggle switch must

1. Have poles as required
2. Be rated at 200 percent of circuit current for circuits of 10 A or less and 125 percent of circuit current for circuits over 10 A

86-3.06B Cartridge Fuses

Install cartridge fuse in panel-mounted fuseholder. Fuse type and rating must be as recommended by the fuse manufacturer for protecting the load.

86-3.06C Circuit Breakers

Circuit breaker must comply with Section 86-2.11, "Service," except breaker must have a minimum interrupting capacity of 5,000 A, rms.

86-3.06D Connectors

Use connector designed to interconnect various parts of circuit together and constructed for the application involved. Design connector for positive connection of circuit and easy insertion and removal of mating contacts. Connector must be permanently keyed to prevent improper connection of circuit.

Connector, or device plugging into connector, must have positive connection to prevent a circuit from breaking due to vibration, a pull on connecting cable, or similar disruptive force.

86-3.07 ACCESSORIES

Accessories must comply with the following:

86-3.07A Telephone Bridge

Telephone bridge must comply with the following:

86-3.07A(1) General Description

Dual 5-way active data bridge must include:

1. 4-wire transmission interconnection between a dedicated common port and 4 multiple ports. Ports must be characterized by a balanced 600 Ω terminating impedance. The module's active circuit must allow unused multiple ports to be left unterminated without affecting the transmission response of ports in use.
2. Splitter channel and combiner channel. Connect multiple inputs to a common output in combiner channel. Connect common input to multiple outputs in splitter channel. Splitter and combiner must be separate and independent, allowing operation in full-duplex data transmission applications. Input, output, and line monitor jacks on front panel of bridge must allow isolated-module, isolated-facility, and cross-bridge measurement of transmission parameters in both, splitter and combiner channels.
3. Front-panel-accessible potentiometers with continuous adjustment of cross-bridge loss or gain within -30 to -10 dB and -10 to +10 dB ranges. Select either range for each channel. Adjusted level must be same for all cross-bridge port combinations so if the splitter-channel potentiometer is set for +3 dB gain, all common-to-multiple-port paths in the splitter channel must receive a +3 dB level increase.
4. Input voltage of -22 to -56 V(dc) at a maximum current of 60 mA.

Individually package each dual 5-way active bridge unit in housing. Circuitry must be solid state, constructed on removable industry standard circuit boards with plug in edge connectors. Test jack, edge connector, and external plug connector must be made of material suitable for use in above stated environment without deterioration of electrical connection for useful life of equipment. Physical size of case must not exceed 225 cubic inches and must be suitable for mounting to frame of field cabinet. Use mounting holes to attach unit to one side of frame of relay rack.

Include input and output ports for 5 full duplex telephone circuits with input and output ports labeled as to function. Level control, or switches and level adjustment potentiometers, and input and output level test jacks must provide external adjustments without removal of the housing.

86-3.07A(2) Application

Use dual 5-way active data bridge to interconnect 4-wire data modems to a common data channel or link. At the distant end, terminate common data link into a computer that may time sequentially poll outlying or remote data terminals. Use bridge for central transmission arrangement, or "hubbing" network, to extend data transmission to outlying terminals.

To expand number of multiple ports of a 4-wire data hubbing network in a tandem bridge arrangement, directly connect 1 multiple port in each channel of 1st bridge to common port of the same channel of 2nd bridge to get a 4-wire data bridge with 1 common and 7 multiple ports.

86-3.07A(3) Circuit Description

Combiner channel of dual 5-way active data bridge must have a variable-gain-integrated-circuit operational amplifier with an input summing circuit. Summing circuit must add transmission energy from all multiple input ports at low-impedance summing point for input port isolation. Connect amplifier output to transformer for balanced connection to facility.

Splitter channel must include a transformer-input, variable-gain, integrated-circuit operational amplifier and power amplifier. Power transformer output must be very low impedance and drive eight 300 Ω resistors to derive proper impedance at multiple output circuits and provide isolation between output circuits.

Multiple ports in bridge splitter and combiner channels must be isolated, and balanced by output transformer and matched precision resistors in each channel.

86-3.07A(4) Electrical Requirements

Comply with following electrical requirements:

Electrical Requirements

Specification	Requirement
Splitter channel loss or gain	-30 to +10 dB usable range
Combiner channel loss or gain	-30 to +10 dB usable range
Maximum output level (overload point)	Splitter: +5 dBm Combiner: +12 dBm
Level change with loading	1 dB max, 1 port to all ports loaded
Input port impedance	Splitter (multiple ports): 600 Ω balanced Combiner (common port): 600 Ω balanced
Output port impedance	Splitter (multiple ports): 600 Ω balanced Combiner (common port): 600 Ω balanced
Harmonic distortion	Splitter: less than 1percent at +3 dBm Combiner: less than 1 percent at +8 dBm
Noise	20 dBm max
Frequency response	±1 dB re 1,000 Hz level, 300 to 5,000 Hz
Delay distortion	Less than 75 µs, 400 to 3,000 Hz
Cross-port coupling loss (crosstalk)	Greater than 55 dB
Input power	-22 to -56 V(dc), 60 mA max
Operating environment	-7 °C to 54 °C, humidity to 95% (no condensation)
Mounting	1 position

86-3.07A(5) Testing and Troubleshooting

You must have complete testing and troubleshooting instructions, circuit diagrams and pictorial component location, and identification guides for each unit.

86-4 TRAFFIC SIGNAL FACES AND FITTINGS

86-4.01 VEHICLE SIGNAL FACES

Each vehicle signal face must:

1. Be adjustable and allow for 360-degree rotation about vertical axis
2. Comply with ITE publication ST-017B, "Vehicle Traffic Control Signal Heads"
3. Comply with California Test 604, except for arrow and "X" faces
4. Have 3 sections arranged vertically: red at top, yellow at center, and green at bottom
5. Be of the same manufacturer and material, if more than 1 is installed at an intersection, except for programmed visibility type
6. Be sealed with neoprene gasket at top opening
7. Be LED modules

86-4.01A Signal Sections

Each signal section must comply with the following:

1. Maximum height must be 10-1/4 inches for an 8-inch section and 14-3/4 inches for a 12-inch section.
2. Housing must:

    2.1. Be either die-cast or permanent mold-cast aluminum, or if specified, be structural plastic.
    2.2. Comply with ITE publication ST-017B if die-cast or permanent mold-cast aluminum is used.
    2.3. Have a 1-piece, hinged, square-shaped door designed to allow access for relamping without the use of tools. Door must be secured to hold the door closed during loading tests. Module or lens must be watertight and mounted in the door.

3. Hinge pins, door latching devices, and other exposed hardware must be Type 304 or 305 stainless steel. Interior screws and fittings must be stainless steel, or steel with a corrosion resistant plating or coating.
4. Opening must be placed on top and bottom to receive 1-1/2-inch pipe. The 8-inch and 12-inch sections of an individual manufacturer must be capable of joining to form a signal face in any combination. This interchangeability is not required between metal and plastic sections.
5. Gaskets must be made of a material that is not affected if installed in a section with metal or plastic housing that is continuously operated for 336 hours.

Structural failure is described as follows:

Signal Section Structural Failure

Signal Section Type	Requirements	Description of Structural Failure
Metal	California Test 666	Fracture within housing assembly or deflection of more than half the lens diameter of signal section during wind load test
Plastic	California Test 605	Fracture within housing assembly or deflection of more than 10 degrees in either the vertical or horizontal plane after wind load has been removed from front of signal face, or deflection of more than 6 degrees in either the vertical or horizontal plane after wind load has been removed from back of signal face

86-4.01A(1) Metal Signal Sections

Each metal signal section must have a metal visor. Metal signal faces requiring backplates must have metal backplates.

86-4.01A(2) Plastic Signal Sections

Housing must be molded in 1 piece, or fabricated from 2 or more pieces and joined into a single piece. Plastic must have ultraviolet stability, be unaffected by lamp heat, and be self-extinguishing. Housing and door must be colored throughout and be black, matching Color No. 17038, 27038, or 37038 of Federal Standard 595B.

Each face section must be joined to adjacent section by one of the following:

1. Minimum of 3 machine screws for 8-inch sections and 4 machine screws for 12-inch sections, installed through holes near front and back of housing. Each screw must be a No. 10 and have a nut, flat washer, and lock washer.
2. Two machine screws, each with a nut, flat washer, and lock washer, installed through holes near the front of the housing, and a fastening through the 1-1/2-inch pipe opening. Fastening must have 2 large flat washers to distribute the load around the pipe opening and 3 carriage bolts, each with a nut and lock washer. Minimum screw size must be No. 10. Minimum carriage bolt size must be 1/4 inch.

Supporting section of each signal face supported only at top or bottom must have reinforcement.

Reinforcement plate must be either sheet aluminum, galvanized steel, or cast aluminum. Each plate must be a minimum of 0.11-inch thick and have a hole concentric with 1-1/2-inch pipe-mounting hole in the housing. Place reinforcement plate as follows:

Reinforcement Plate Placement

Type of Reinforcement Plate	Placement
Sheet aluminum	Inside and outside of housing
Galvanized steel	Inside of housing
Cast aluminum	Outside of housing

Reinforcement plates placed outside of the housing must be finished to match signal housing color and be designed to allow proper serrated coupling between signal face and mounting hardware. Minimum of 3 No. 10 machine screws must be installed through holes in each plate and matching holes in the housing. Each screw must have a round or binder head, a nut, and lock washer.

If signal face is supported by a Type MAS side attachment slip-fitter inserted between 2 sections, place spacers between the 2 sections. Vertical dimension of spacers must allow proper seating of serrations between the slip-fitter and the 2 sections. In addition to the fastening through the large openings in housing, the 2 sections must join with at least 2 machine screws through holes near the front of housing and the spacers, and through matching holes in a reinforcing plate installed in housing. Machine screws must be No. 10 minimum size. Spacers must be made of same material as signal housing.

If reinforcing webs are used to connect back of housing to top, bottom, and sides, reinforcing plates are not required.

Holes for machine screws must be either cast or drilled during signal section manufacturing. Surround each hole with a 1/8-inch minimum width boss to allow contact between signal sections about axis of hole.

Each plastic signal section must have a plastic or metal visor. Plastic signal faces requiring backplates must have plastic backplates.

Serrated nylon washer must be inserted between each plastic signal section and metal mounting assembly. Each washer must be between 3/16- and 1/4-inch thick. Serrations must match those on signal section and mounting assembly.

86-4.01B Visors

Include removable visor with each signal section. Comply with ITE publication ST-017B. Visors are classified by lens enclosure as full circle, tunnel or cap. Bottom opens for tunnel type and both, bottom and lower sides open for cap type. Visors must be tunnel type.
Visor must have a downward tilt between 3 and 7 degrees with a length of:

1. 9-1/2-inch minimum for nominal 12-inch round lenses
2. 7 inch for nominal 8-inch round lenses

Metal visor must be formed from 0.050-inch, minimum thickness, aluminum alloy sheet.

Plastic visor must be either formed from sheet plastic or assembled from one or more injection, rotational, or blow-molded plastic sections. Material must be of a black homogeneous color with lusterless finish. Sections must be joined using thermal, chemical, or ultrasonic bonding, or with aluminum rivets and washers permanently colored to match visor.

Secure each visor to its door and prevent removal or permanent deformation when wind load specified in California Test 605 for plastic visors or 666 for metal visors is applied to its side for 24 hours.

If directional louvers are used, fit louvers snuggly into full-circular signal visors. Outside cylinder must be constructed of 0.030-inch nominal thickness, or thicker, sheet steel and vanes must be constructed of 0.016-inch nominal thickness, or thicker, sheet steel, or the cylinder and vanes must be constructed of 5052-H32 aluminum alloy of equal thickness.

86-4.02 (BLANK)

86-4.03 (BLANK)

86-4.04 BACKPLATES

Background light must not be visible between backplate and signal face or between sections.
Plastic backplates must be either formed from sheet plastic or assembled from extruded, molded, or cast sections. Sections must be factory joined using one of the following:

1. Appropriate solvent cement
2. Aluminum rivets and washers painted or permanently colored to match backplate
3. No. 10 machine screws with washers, lock washers, and nuts, painted to match backplate

Backplate material must be of black homogeneous color with a lusterless finish. Secure each plastic backplate to the plastic signal face in a manner that prevents its removal or permanent deformation when the wind-load test is applied to either the front or back of signal face. Permanent deformation of any portion of backplate must not exceed 5 degrees forward or backward after wind loading is applied for 24 hours.

If plastic backplate requires field assembly, join with at least 4 No. 10 machine screws at each field-assembled joint. Each machine screw must have an integral or captive flat washer, a hexagonal head slotted for a standard screwdriver, and either a locking nut or a nut and lockwasher. Machine screws, nuts, and washers must be stainless steel or steel with a zinc or black-oxide finish.

If a metal backplate has 2 or more sections, fasten sections with rivets or aluminum bolts peened after assembly to avoid loosening.

Instead of the screws shown on the plans, you may use self-threading No. 10 steel screws to fasten plastic backplates to plastic signal face. Each screw must have an integral or captive flat washer, a hexagonal head slotted for a standard screwdriver, and is stainless steel or steel with a zinc or black-oxide finish.

86-4.05 PROGRAMMED VISIBILITY VEHICLE SIGNAL FACES

Programmed visibility signal face and its installation must comply with Section 86-4.01, "Vehicle Signal Faces," Section 86-4.04, "Backplates," and Section 86-4.08, "Signal Mounting Assemblies." Each programmed visibility signal section must:

1. Have a nominal 12-inch diameter circular or arrow indication
2. Comply with ITE publication ST-017B for color and arrow configuration
3. Have a cap visor
4. Have an adjustable connection that provides incremental tilting from 0 to 10 degrees above or below horizontal while maintaining a common vertical axis through couplers and mountings

Terminal connection must allow external adjustment about the mounting axis in 5-degree increments.

Signal must be mountable with ordinary tools and capable of servicing without tools. Preset adjustment at 4 degrees below horizontal.

Visibility of each programmed visibility signal face must be capable of adjustment or programming, within the face. When programmed, each signal face's indication must be visible only in those areas or lanes to be controlled, except that during dusk and darkness a faint glow to each side is allowed.

You must program the head as recommended by the manufacturer.

86-4.06 PEDESTRIAN SIGNAL FACES

Message symbols for pedestrian signal faces must be white "WALKING PERSON" and Portland orange "UPRAISED HAND." Comply with ITE Standards: "Pedestrian Traffic Control Signal Indications" and California MUTCD. Each symbol's height must be at least 10 inches and width must be at least 6-1/2 inches.

Luminance of "UPRAISED HAND" symbol must be 1,100 foot-lamberts, minimum, and luminance of "WALKING PERSON" symbol must be 1,550 foot-lamberts, minimum, when tested as specified in California Test 606.

Uniformity ratio of an illuminated symbol must not exceed 4 to 1 between the highest luminance area and the lowest luminance area.

Luminance difference between a nonilluminated symbol and the background around the symbol must be less than 30 percent when viewed with the visor and front screen in place and at a low sun angle.

Each housing, including front screen, must have maximum overall dimensions of 18-1/2-inch width, 19-inch height, and 11-1/2-inch depth.

All new pedestrian signal faces installed at an intersection must be the same make and type.

86-4.06A Type A

Each Type A pedestrian signal face must include a housing, 1 LED pedestrian signal combo module and a front screen.

86-4.06B Front Screen

Front screen installation for each Type A signal must comply with one of the following:

1. Install, tilting downward, at an angle of 15±2 degrees out from the top, an aluminum honeycomb screen with 0.2-inch cells, 3/8-inch thick, or a plastic screen of 3/8-inch squares, 1/2-inch thick with wall thickness of 1/16-inch. Completely cover message plate. Include a clear front cover of 1/8-inch minimum thickness acrylic plastic sheet or 1/16-inch minimum thickness polycarbonate plastic. Hold screen and cover firmly in place with stainless steel or aluminum clips or stainless steel metal screws.
2. Install a 1-1/2-inch deep eggcrate or Z crate type screen of 1/32-inch nominal thickness polycarbonate. Mount screening in a frame constructed of 0.040-inch minimum thickness aluminum alloy or polycarbonate. Install screen parallel to face of message plate and hold in place with stainless steel screws. Visor as specified in Section 86-4.06D, "Visors," is not required.

The Department will test screens in a horizontal position with its edges supported. When a 3-inch diameter, 4-pound steel ball is dropped on the screen from a height of 4 feet above, the front screen must not fracture, separate at the welds, or compress more than 1/8-inch. When pedestrian housing is used to support front screen during test, remove message plate from pedestrian signal housing, so there is no back support for the screen.

Screen and frame must be one of the following:

1. Manufactured from aluminum anodized flat black
2. Finished with lusterless black exterior grade latex paint formulated for application to properly prepared metal surfaces
3. Manufactured from flat black plastic

86-4.06C Housing

Pedestrian signal housing must comply with Section 86-4.01A, "Signal Sections."

86-4.06D Visors

Use material similar to housing. Extend top of visor a minimum length of 6 inches at top and 5 inches at bottom when measured from front surface of line. Front must be normal to top.

86-4.06E Finish

Paint exterior of each housing and visor, and interior of visor as specified in Section 86-2.16, "Painting."

86-4.06F Control

Pedestrian signals must be controllable by solid-state switching devices specified for traffic signal controller assemblies.

86-4.06G Terminal Blocks

Include light duty terminal block, as specified in Section 86-4.01B, "Electrical Components," with each pedestrian signal face.

86-4.07 (BLANK)

86-4.08 SIGNAL MOUNTING ASSEMBLIES

Signal mounting assembly must include:

1. 1-1/2-inch standard steel pipe or galvanized conduit
2. Pipe fitting made of ductile iron, galvanized steel, aluminum alloy Type AC-84B No. 380, or bronze
3. Mast arm and post top slip-fitters, and terminal compartments made of cast bronze or hot-dip galvanized ductile iron

After installation, clean and paint exposed threads of galvanized conduit brackets and bracket areas damaged by wrench or vise jaws. Use wire brush to clean and apply 2 coats of approved unthinned zinc-rich primer, organic vehicle type, as specified in Section 91, "Paint." Do not use aerosol can.

Fit each terminal compartment with a terminal block having a minimum of 12 positions, each with 2 screw-type terminals. Each terminal must accommodate at least five No. 14 conductors. Include a cover on compartment for ready access to terminal block. Terminal compartment used to bracket mount signals must be bolted securely to pole or standard.

Horizontal dimension of mounting assembly members between vertical centerline of terminal compartment or slip-fitter, and the vertical centerline of each signal face must not exceed 11 inches, except where required for proper signal face alignment or to allow programming of programmed visibility signal faces.

Mounting assembly members must be plumb or level, symmetrically arranged, and securely assembled.

Mounting assembly must be watertight, and free of sharp edges or protrusions that might damage conductor insulation. Include positive locking serrated fittings that, if mated with similar fittings on signal faces, will prevent faces from rotating.

Orient each mounting assembly to allow maximum horizontal clearance to adjacent roadway.

Use slip-fitter for post-top mounting of signals. Fit slip-fitter over a 4-1/2-inch outside diameter pipe or tapered standard end. Include cadmium-plated steel set screws. Include an integral terminal compartment for each slip-fitter used to post-top mount signals with brackets.

Do not install signal faces at an intersection until all other signal equipment, including complete controller assembly, is in place and ready for operation. You may mount signal faces if covered or not directed toward traffic.

86-4.09 FLASHING BEACONS

Flashing beacon must include:

1. Single section traffic signal face with yellow or red LED module indications
2. Backplate
3. Tunnel visor
4. Flashing beacon control assembly

Beacon flasher unit must be independent of intersection flasher unit.

86-4.09A Flashing Beacon Control Assembly

86-4.09A(1) Enclosure

Enclosure must be:

1. NEMA 3R with a dead front panel and a hasp with a 7/16-inch hole for a padlock
2. Powder coated, hot-dip galvanized, or factory-applied rust resistant prime coat and finish coat

86-4.09A(2) Circuit Breakers and Switches

Circuit breakers must comply with Section 86-2.11, "Service."

Switch for manually operating sign lighting circuit must be a single-hole-mounting toggle type with a single pole and throw and rated at 12 A, 120 V(ac). Furnish switch with an indicating nameplate reading "Auto-Test."

86-4.09A(3) Flasher

Comply with Section 8, "Solid-State Flashers," of NEMA Standards publication No. TS 1.

Flasher must be a solid-state device with no contact points or moving parts.
Include 2 output circuits to allow alternate flashing of signal faces. Flasher must be able to carry a minimum of 10 A per circuit at 120 V(ac).

86-4.09A(4) Wiring

Conductors and wiring in the enclosure must comply with Section 86-2.09B(1), "Cabinet and Enclosure Installation."

86-4.09A(5) Terminal Blocks

Terminal blocks must be:

1. Rated 25 A, 600 V(ac)
2. Molded phenolic or nylon material
3. Barrier type with plated brass screw terminals and integral marking strips

86-5 DETECTORS

86-5.01 VEHICLE DETECTORS

Sensor unit and isolator must comply with TEES.

86-5.01A Inductive Loop Detectors

86-5.01A(1) General

Inductive loop detector includes a completely installed loop or group of loops, in the roadway, lead-in cable, and a sensor unit, with power supply installed in a controller cabinet.

86-5.01A(2) Sensor Unit Construction

Card type sensor unit must comply with TEES, issued by the Department. Shelf-mounted sensor unit must comply with Section 11 of the NEMA Standards Publication No. TS 1.

86-5.01A(3) Construction Materials

Conductor for each inductive loop detector must be continuous, unspliced, and one of the following:

Conductor Options for Inductive Loop Detector

Option	Specifications
Type 1 loop wire	Type RHW-USE neoprene-jacketed or Type USE cross-linked polyethylene insulated, No. 12, stranded copper wire with a 40 mils minimum thickness at any point.
Type 2 loop wire	Type THWN or Type XHHW, No. 14, stranded copper wire in a plastic tubing. Plastic tubing must be polyethylene or vinyl, rated for use at 105 °C, and resistant to oil and gasoline. Outside diameter of tubing must be 0.27 inch maximum with a wall thickness of 0.028 inch minimum.

Conductor for loop detector lead-in cable must be two No. 16, 19 x 29, stranded, tinned copper wires, comply with the calculated cross sectional area of ASTM B 286, Table 1, and be one of the following:

Conductor Options for Loop Detector Lead-In Cable

Option	Specifications
Type B lead-in cable	Insulated with 20 mils of high-density polyethylene. Conductors must be twisted together with at least 2 turns per foot and the twisted pair must be protected with a copper or aluminum polyester shield. A No. 20, minimum, copper drain wire must be connected to equipment ground within cabinet. Cable must have a high-density polyethylene or high-density polypropylene outer jacket with a nominal thickness of 32 mils. Include an amorphous interior moisture penetration barrier of nonhydroscopic polyethylene or polypropylene fillers.
Type C lead-in cable	Comply with International Municipal Signal Association (IMSA) Specification No. 50-2. A No. 20, minimum, copper drain wire must be connected to equipment ground within cabinet.

86-5.01A(4) Installation Details

Install loop conductors without splices and end in nearest pull box. Seal open end of cable jacket or tubing similar to splicing requirements to prevent water from entering. Do not make final splices between loops and lead-in cable until loop operations under actual traffic conditions is approved.

Splice all loop conductors for each direction of travel for same phase of a traffic signal system, in same pull box, to a detector lead-in cable that runs from pull box adjacent to loop detector to a sensor unit mounted in controller cabinet.

End all loop conductors in a pull box or terminal strip in the cabinet.

Identify and band conductors for inductive loop installations. Band, in pairs, by lane, in the pull box adjacent to the loops and near the end of conductors in the cabinet. Bands must comply with Section 86-2.09, "Wiring."

If HMA surfacing is to be placed, install loop conductors before placing uppermost layer of HMA. Install conductors in compacted layer of HMA immediately below the uppermost layer. Install conductors as shown on the plans, except fill slot with sealant flush to the surface.

When cutting loops:

1. Residue from slot cutting activities must not be allowed to flow across shoulders or lanes occupied by public traffic and must be removed from the pavement surface before residue flows off. Dispose of residue from slot cutting activities under Section 7-1.13, "Disposal of Materials Outside the Highway Right of Way."
2. Surplus sealant must be removed from adjacent road surface without using solvents before setting.

Sealant for filling slots must comply with one of the following:

Elastomeric Sealant

Polyurethane material that will, within stated shelf life, cure only in the presence of moisture. Sealant must be suitable for use in both HMA and PCC.

The cured sealant must have the following performance characteristics:

Performance Characteristics of Cured Sealant

Specification	ASTM	Requirement
Hardness (indentation) at 25 °C and 50% relative humidity. (Type A, Model 1700 only)	D 2240 Rex.	65-85
Tensile Strength: Pulled at 508 mm per minute	D 412 Die C	3.45 MPa, min.
Elongation: Pulled at 508 mm per minute	D 412 Die C	400%, min.
Flex at -40 °C: 0.6-mm free film bend (180°) over 13-mm mandrel	--	No cracks
Weathering Resistance: Weatherometer 350 h, cured 7 days at 25 °C @ 50% relative humidity	D 822	Slight chalking
Salt Spray Resistance: 28 days at 38 °C with 5% NaCl, Die C & pulled at 508 mm per minute	B 117	3.45 MPa, min. tensile 400%, min. elongation
Dielectric Constant over a temperature range of -30 °C to 50 °C	D 150	Less than 25% change

Asphaltic Emulsion Sealant

Comply with State Specification 8040-41A-15. Use for filling slots in HMA pavement that are a maximum of 5/8 inch in width. Do not use where the slope causes the material to run from the slot. Material must not be thinned beyond manufacturer's recommendations. Place material when air temperature is at least 7 °C.

Hot-Melt Rubberized Asphalt Sealant

Hot-melt rubberized asphalt must be:

1. In solid form at room temperature and fluid at application temperature of 190 °C to 205 °C. Fumes must be non-toxic.
2. Suitable for use in both HMA and PCC.
3. Melted in a jacketed, double-boiler type melting unit. Temperature of heat transfer medium must not exceed 245 °C.

4. Applied with a pressure feed applicator or pour pot, when the pavement surface temperature is greater than 4 °C.
5. Packaged in containers clearly marked "Detector Loop Sealant" and specifying manufacturer's batch and lot number.

The cured sealant must have the following performance characteristics:

Performance Characteristics of Cured Sealant

Specification	ASTM	Requirement
Cone Penetration, 25 °C, 150 g, 5 s	D 5329, Sec. 6	3.5 mm, max
Flow, 60 °C	D 5329, Sec. 8	5 mm, max
Resilience, 25 °C	D 5329, Sec. 12	25%, min
Softening Point	D 36	82 °C, min
Ductility, 25 °C, 50 mm/min	D 113	300 mm, min
Flash Point, COC, °C	D 92	288 °C, min
Viscosity, Brookfield Thermosel, No. 27 Spindle, 20 rpm, 190 °C	D 150	Less than 25% change

86-5.01B Magnetic Detectors

Cable from pull box, adjacent to magnetic detector sensing element, to the field terminals in the controller cabinet must be the type specified for inductive loop detectors.

86-5.02 PEDESTRIAN PUSH BUTTON ASSEMBLIES

Housing must be either die-cast or permanent mold-cast aluminum, or ultraviolet stabilized, self-extinguishing structural plastic, if specified. Plastic housing must be black matching Color No. 17038, 27038 or 37038 of Federal Standard 595B, and colored throughout. Assembly must be rainproof and shockproof in any weather condition.

Switch must be a single-pole, double-throw, switching unit, with screw type terminals, rated 15 A at 125 V(ac), and must have:

1. Plunger actuator and a U frame to allow recessed mounting in push button housing
2. Operating force of 3.5 pounds
3. 1/64-inch maximum pretravel
4. 7/32-inch minimum overtravel
5. 0.0004- to 0.002-inch differential travel
6. 2-inch minimum diameter actuator

Where pedestrian push button is attached to a pole, shape housing to fit the pole curvature and secure. Include saddles to make a neat fit if needed.

Where a pedestrian push button is mounted on top of a 2-1/2-inch diameter post, fit housing with a slip-fitter and use screws for securing rigidly to post.

Pedestrian push button signs must be porcelain enameled metal or structural plastic.

Install push button and sign on crosswalk side of pole.

Point arrows on push button signs in the same direction as the corresponding crosswalk.

Attach sign on Type B push button assembly.

For Type C pedestrian push button assembly, mount instruction sign on the same standard as the push button assembly, using 2 straps and saddle brackets. Straps and saddle brackets must be

corrosion-resisting chromium nickel steel and comply with ASTM A 167, Type 302B. Theft-proof bolts must be stainless steel with a chromium content of at least 17 percent and a nickel content of at least 8 percent.

86-6 LIGHTING

86-6.01 HIGH PRESSURE SODIUM LUMINAIRES

High pressure sodium luminaires must be the enclosed cutoff type.

Housing must be manufactured from aluminum. Painted or powder-coated housing must withstand a 1,000-hour salt spray test as specified in ASTM B 117.

Other metal parts must be corrosion resistant.

Each housing must include a slip-fitter that can be mounted on a 2-inch pipe tenon and can be adjusted 5 degrees from the axis of the tenon. Clamping brackets of slip-fitter must not bottom out on housing bosses when adjusted within the ±5 degree range.

The slip-fitter mounting bracket must not permanently set in excess of 0.020-inch when the 3/8-inch diameter cap screw used for mounting is tightened to 10 foot-pounds.

Luminaire to be mounted horizontally on mast arm, when tested as specified in California Test 611, must be capable of withstanding cyclic loading for a minimum of 2 million cycles without failure of any luminaire parts as follows:

Cyclic Loading

Plane	Internal Ballast	Minimum Peak Acceleration Level[a]
Vertical	Removed	3.0 G peak-to-peak sinusoidal loading (same as 1.5 G peak)
Horizontal[b]	Installed	1.5 G peak-to-peak sinusoidal loading (same as 0.75 G peak)
Vertical	Installed	1.0 G peak-to-peak sinusoidal loading (same as 0.5 G peak)

[a]G = Acceleration of gravity

[b]Perpendicular to direction of mast arm

If a photoelectric unit receptacle is included, a raintight shorting cap must be installed. If luminaire housing has a hole for the receptacle, hole must be permanently closed, covered, and sealed with weatherproof material.

Optical system must be in a sealed chamber and include:

1. Reflector shaped so that a minimum of light is reflected through the arc tube of the lamp. Reflector surface must be specular and protected by either an anodized finish or a silicate film on it's specular surface.
2. Refractor or lens mounted in a door frame that is hinged to the housing and secured with a spring-loaded latch. Refractor must be made of glass or polycarbonate plastic. Lens must be made of heat- and impact-resistant glass.
3. Lamp socket that is a porcelain enclosed mogul-multiple type. Shell must include integral lamp grips to assure electrical contact under conditions of normal vibration. Socket must be mounted in the luminaire to allow presetting a variety of specified light distribution patterns. Socket must be rated for 1,500 W and 600 V(ac), and a 4 kV pulse.
4. Lamp.

Sealing must be provided by a gasket between the reflector and:

1. Refractor or lens
2. Lamp socket

Chamber must allow for filtered flow of air in and out of the chamber from lamp heat. Filtering must be accomplished by either a separate filter or a filtering gasket.

If components are mounted on a down-opening door, door must be hinged and secured to luminaire housing separately from refractor or flat lens frame. Door must be easily removable and replaceable, and secured to housing to prevent accidental opening when refractor or flat lens frame is opened.

Field wires connected to luminaire must terminate on a barrier-type terminal block secured to the housing. Terminal screws must be captive and equipped with wire grips for conductors up to No. 6. Each terminal positions must be clearly identified.

Minimum light distribution for each luminaire must meet the isolux diagrams.

Maximum brightness of each cutoff luminaire, with the lamp indicated, must be as follows:

Cutoff Type

Lamp ANSI Code No.	Lamp Wattage	Maximum Brightness foot-lamberts
S55	150	40
S66	200	40
S50	250	50
S67	310	60
S51	400	75

Brightness readings will be taken using a brightness meter with an acceptance angle of 1.5 degrees. When measured on the 90-degree and 270-degree lateral angle line, maximum brightness must not exceed above specified brightness when meter is located at a horizontal distance of 120 feet and a vertical distance of 7.5 feet between luminaire and meter, or at an angle of 3 degrees 35 minutes from the horizontal to the line between luminaire and meter. Measurements must be made from 90-degree line and 270-degree line, and averaged. Lamp used for each test must operate at wattage necessary to produce the following light output:

Light Output

Lamp Wattage	Lumens
150	16,000
200	22,000
250	27,000
310	37,000
400	50,000

86-6.01A High Pressure Sodium Lamp Ballasts

Each ballast must:

1. Operate the lamp for its rated characteristics and wattage
2. Continuously operate at ambient air temperatures from -20 °C to 25 °C without reduction in ballast life
3. Operate for at least 180 cycles of 12 hours on and 12 hours off, with the lamp circuit in an open or short-circuited condition and without measurable reduction in operating requirements
4. Have a design life of not less than 60,000 hours
5. Provide proper starting and operating waveforms, voltage, and current
6. Provide reliable lamp starting and operation at ambient temperature down to -20 °C for the rated life of lamp

Ballast must be tested as specified in ANSI C82.6-1980, "Methods of Measurement of High-Intensity-Discharge Lamp Ballasts."

Starting aids for ballast of a given lamp wattage must be interchangeable between ballasts of same wattage and manufacturer, without adjustment.

Each integral ballast must consist of separate components that can be easily replaced. An encapsulated starting aid will be counted as a single component. Each component must include screw terminals, NEMA tab connectors, or a single multi-circuit connector. Conductors and terminals must be identified.

Mount heat-generating component so as to use the portion of the luminaire it is mounted to as a heat sink. Place capacitor a maximum practicable distance from heat-generating components or thermally shield to limit the case temperature to 75 °C.

Transformer and inductor must be resin-impregnated for protection against moisture. Capacitors, except those in starting aids, must be metal cased and hermetically sealed.

The Department will test high-pressure sodium lamp ballast. High-pressure sodium lamp ballast must have a characteristic curve that will intersect both of the lamp-voltage limit lines between the wattage limit lines and remain between the wattage limit lines throughout the full range of lamp voltage. This requirement must be met at the rated input voltage of the ballast and at the lowest and highest rated input voltage of the ballast.

Throughout the lifetime of the lamp, ballast curve must fall within the specified limits of the lamp voltage and wattage.

Ballast for luminaires must be located in the luminaire housing.

86-6.01A(1) Regulator Type Ballasts

Regulator type ballast must comply with the following:

1. For nominal input voltage and lamp voltage, ballast design center must not vary more than 7.5 percent from rated lamp wattage.
2. Ballast must be designed for a capacitance variance of ±6 percent that will not cause more than ±8 percent variation in lamp wattage regulation during rated lamp life.
3. Lamp current crest factor must not exceed 1.8 for input voltage variation of ±10 percent at any lamp voltage during lamp life.

Regulator-type ballast must be one of the following:

Regulator-Type Ballast

Ballast Type	Power Factor	Lamp Regulation
Lag-type[a]	Not less than 90 percent throughout the life of lamp when ballast is operated at nominal line voltage with a nominally-rated reference lamp	Lamp wattage regulation spread does not vary by more than 18 percent for ±10 percent input voltage variation from nominal through life
Lead-type[b]	Not less than 90 percent throughout the life of lamp when ballast is operated at nominal line voltage with a nominally-rated reference lamp	Lamp wattage regulation spread does not vary by more than 30 percent for ±10 percent input voltage variation from nominal through life

[a]Primary and secondary windings must be electrically isolated

[b]Constant wattage autoregulator (CWA)

86-6.01A(2) Nonregulator Type Ballasts

Each nonregulator type ballast must comply with the following:

1. For nominal input voltage and lamp voltage, ballast design center must not vary more than 7.5 percent from rated lamp wattage.
2. Lamp current crest factor must not exceed 1.8 for input voltage variation of ±5 percent at any lamp voltage during lamp life.

Nonregulator-Type Ballast

Ballast Type	Power Factor	Lamp Regulation
Autotransformer or High-Reactance	Not less than 90 percent throughout the life of lamp when ballast is operated at nominal line voltage with a nominally-rated reference lamp	Lamp wattage regulation spread does not vary by more than 25 percent for ±5 percent input voltage variation from nominal through life

86-6.01B High Pressure Sodium Lamps

High pressure sodium lamps must comply with ANSI C 78.42, "High Pressure Sodium Lamps," when tested as specified in ANSI C 78.389, "American National Standard for Electric Lamps - High Intensity Discharge-Methods of Measuring Characteristics." High pressure sodium lamps must have a minimum average rated life of 24,000 hours.

86-6.02 LOW PRESSURE SODIUM LUMINAIRES

Each low pressure sodium luminaire must be completely assembled with a lamp and ballast, and must:

1. Be the enclosed type, either semi-cutoff or cutoff type.
2. Include housing, reflector, refractor or lens, lamp socket, integral ballast, removable ballast tray, lamp support, terminal strip, capacitor, and slip fitter. Reflector may be an integral part of the housing.

Luminaire housing must be minimum 1/16-inch thick, corrosion resistant die cast aluminum sheet and plate with concealed continuous welds, or minimum nominal wall thickness of 3/32-thick acrylonitrile-butadiene-styrene sheet material, on a cast aluminum frame that provides mounting for all electrical components and slip fitter. Housing must be divided into optical and power compartments that are individually accessible for service and maintenance. Position and clamp luminaire to pipe tenon by tightening mounting bolts.

Painted exterior surface of luminaire must be finished with a fused coating of electrostatically applied polyester powder paint or other ultraviolet inhibiting film. Color must be aluminum gray.

High temperature neoprene, or equal, sealing ring must be installed in pipe tenon opening to prevent entry of water and insects into power and optical compartments.

Access to power unit assembly must be through a weathertight hinged cover, secured with spring type latches or captive screws, to luminaire housing.

Hardware must be stainless steel or cadmium plated. Use machine screws or bolts to secure removable components. Do not use sheet metal screws.

Semi-cutoff luminaires and molded refractor style cutoff luminaires must include a refractor. Other cutoff luminaires must include a flat lens.

Refractor must be 1-piece injection molded polycarbonate of 3/32 inch minimum thickness, or 1-piece injection molded acrylic of 1/8 inch minimum thickness. Flat lens must be 1-piece

polycarbonate of 3/32 inch minimum thickness, mounted to metal frame. Refractor assembly and flat lens assembly must be constructed to rigidly maintain its shape, and hinged and secured with spring type latches to luminaire housing. Alternate methods of manufacturing refractor may be approved provided minimum specified thicknesses are maintained.

Lamp socket must be high temperature, flame retardant thermoset material with self-wiping contacts or equivalent. Socket must be rated for 660 W and 1,000 V(ac). Position of socket and support must maintain the lamp in correct relationship with reflector and refractor for designed distribution pattern.

Isofootcandle distribution must be ANSI Type III, short or Type IV, medium distribution, for cutoff or semi-cutoff luminaires.

With a 40-foot mounting height, each type of luminaire must maintain a minimum of 0.2 footcandle at least 60 feet each side, along the longitudinal roadway line below the luminaire, and a minimum of 0.35 footcandle at a transverse roadway distance from luminaire location equal to 1.5 times the luminaire mounting height.

Certified luminaire performance data must be provided. This data must include complete photometric test data in isofootcandle charts at a scale of 1 inch equals 20 feet, for the luminaire and lamp sizes shown on the plans.

Alternate data may be in horizontal footcandle values recorded on a 15' x 15' area extending 90 feet longitudinally each side of the light source, and 15 feet behind and 90 feet in front of the light source, for luminaire and lamp sizes, and mounting height shown on the plans. Horizontal footcandle levels in data submitted must equal or exceed levels specified. Failure to meet referenced values will be justification for rejection of the luminaires.

Photometric testing must be performed and certified by an independent and recognized testing laboratory.

Low pressure sodium lamps must:

1. Be 180 W, single-ended, bayonet base, tubular gas discharge lamp
2. Maintain a minimum of 93 percent of initial lumens during rated life and must comply with the following minimum performance requirements:

Performance Requirements

Lamp Designation	ANSI L74-RF-180
Initial Lumens	33,000 lumens
Rated Ave. Life (@ 10 hrs/Start)	18,000 hours
Operating Position	Horizontal ±20 degrees

3. Reach 80 percent of light output within 10 minutes and must restrike within 1 minute after an outage due to power interruption or voltage drop at the lamp socket
4. Identify the month and year of installation.
5. Have an autotransformer or high-reactance type ballast. The ballast must comply with the following:

    5.1. Lamp current crest factor must not exceed 1.8 at nominal line voltage
    5.2. Ballast loss must not exceed 24 percent for 180 W ballast at nominal line voltage

Autotransformer or High-Reactance Type Ballast

Ballast Type	Power Factor	Lamp Operation
Autotransformer or High-Reactance	Not less than 90 percent when ballast is operated at nominal line voltage with a nominally-rated reference lamp	Lamp wattage regulation spread does not vary by more than ±6 percent for ±10 percent input voltage variation from nominal through life

A multi-circuit connector must be included for quick disconnection of ballast tray.

86-6.03 SOFFIT AND WALL LUMINAIRES

Soffit and wall luminaire must be weatherproof and corrosion resistant.

Each flush-mounted soffit luminaire must consist of:

1. Metal body with two 1-inch minimum conduit hubs and provisions for anchoring into concrete
2. Prismatic refractor made of heat-resistant polycarbonate mounted in a door frame and clearly identified as to street side
3. Specular anodized aluminum reflector
4. Ballast located either within housing or in a ceiling pull box as shown on the plans
5. Lamp socket

The door frame assembly must be hinged, gasketed, and secured to body by at least 3 machine screws.

Each pendant soffit luminaire must be enclosed and gasketed, have an aluminum finish, and include:

1. Reflector with a specular anodized aluminum finish
2. Refractor made of heat-resistant polycarbonate
3. Optical assembly hinged and latched for lamp access and a device to prevent dropping
4. Ballast designed for operation in a raintight enclosure
5. Galvanized metal box with a gasketed cover, 2 captive screws, and 2 chains to prevent dropping and for luminaire mounting

Each wall-mounted luminaire must consist of:

1. Cast metal body
2. Prismatic refractor, made of glass, mounted in a door frame
3. Aluminum reflector with a specular anodized finish
4. Integral ballast
5. Lamp socket
6. Gasket between refractor and body
7. At least two 5/16-inch minimum diameter mounting bolts

Cast-aluminum bodies to be cast into or mounted against concrete must have a thick application of alkali-resistant bituminous paint on all surfaces to be in contact with concrete.

Each soffit luminaire and wall luminaire must include a 70 W high-pressure sodium lamp with a minimum average rated life of 24,000 hours. Each lamp socket must be positioned to locate the light center of the lamp within 1/2 inch of light center location of the luminaire design.

Ballast must comply with Section 86-6.01A, "High Pressure Sodium Lamp Ballasts." Wall luminaire ballast must be located in luminaire housing or, if shown on the plans, in a pull box adjacent to luminaire.

86-6.04 PEDESTRIAN CROSSING FIXTURES

Before starting fixture manufacturing, submit fixture design for approval. If requested, submit 1 complete prototype fixture for approval at least 30 days before manufacturing the fixtures. The prototype fixture will be returned to you, and if permitted, the fixture may be installed in the work.

Lens unit in door section must be formed of 1-1/2-inch methyl methacrylate rod cut and fire-glazed for a clear finish or a cast unit with equivalent tolerances and finish.

Lens must be secured to door section with an extruded lens retainer of 6063-T5 aluminum alloy that fits the lens shape. Lens retainer must fit the full length of lens on both sides. Continuous lens retainer for the full length of 3 lenses is allowed. Z bars of 5052-H32 or 5005-H14 aluminum alloy, 1/16 inch minimum thickness may be substituted for extruded lens retainer.

A captive positive-keyed screw-type latching device requiring a special socket wrench must be installed at upper edge to secure door in the closed position as shown on the plans. Furnish 2 special wrenches to the Engineer.

Each fixture must include a F48T12/CW rapid start fluorescent lamp with recessed, double contact base installed on back side of door directly behind lens.

Each lampholder must be UL listed for outdoor use without an enclosure and with 1,500 mA rapid start fluorescent lamp. Lampholder must be spring-loaded type.

For each lamp, the distance from face of lampholder to the lamp must be designed to provide a compression of at least 0.10-inch on the spring-type lampholder when lamp is in place. Lamp must have positive mechanical and electrical contact when lamp is in place. Socket on spring-type lampholder must have enough travel to allow lamp installation. Spring must not be a part of current-carrying circuit.

Ballast must be high-power-factor type with weatherproof leads for operation of one 48-inch rapid-start lamp. Ballast must be UL listed for outdoor operation on 110 to 125 V(ac) 60 Hz circuit and rated at 1,500 mA.

Conductors from ballast leads to lampholder must be minimum size of No. 16, stranded, and UL-listed copper AWM. Splicing of lampholder conductors to ballast leads must be performed by using mechanically secure connectors.

Conductors in fixture except ballast leads and entrance line conductors, must be UL-listed AWM.

Provide sufficient slack in the conductors to allow the fixture door to fully open.

Circuit conductors entering the fixture must be terminated on molded phenolic barrier-type terminal blocks rated at 15 A and 600 V(ac) and must have integral-type white waterproof-marking strips. Current-carrying parts of terminal blocks must be insulated from fixture with integral plugs or strips to provide protection from line-to-ground flashover voltage. Terminal blocks must be attached to wireway cover in top section. If you use sectionalized terminal blocks, each section must include an integral barrier on each side and be capable of rigid mounting and alignment.

Exposed surfaces of fixture must be uniform in appearance and free from significant defects, including improper fit, dents, deep scratches and abrasions, burrs, roughness, off-square ends, holes off-center or jagged, and surface irregularities. Screws for attaching components to fixture door, including Z bars, ballasts, and terminal block, must be tapped into door from the inside only. Screwheads, nuts, or other fasteners must not be removable from the outside.

86-6.04A Pedestrian Undercrossing Fixtures

Fixture shell must be cast aluminum alloy, industrial type or Federal Class 18 aluminum of 1/4 inch minimum thickness.

Door must be 1 piece of 6061-T6 aluminum alloy of 1/8 inch minimum thickness.

Continuous piano hinge must be Type 1100 aluminum alloy. The piano hinge must be welded or riveted to door section with 1/8 inch aluminum rivets. Matching holes must be drilled in the hinge and lower edge of fixture. After shell is in place, door assembly must be attached by minimum 3/8-inch No. 8 stainless steel self-tapping screws.

A neoprene gasket must be attached to frame to provide a cushion between the shell and the door.

Chain or other device must be included to prevent the door, when fully opened, from coming in contact with the undercrossing wall.

Fixture must be held in place by three 3/8" x 8" anchor bolts with 2 nuts each.

Fixture surfaces in contact with concrete, and with anchor bolts and nuts must be painted with a thick application of alkali-resistant bituminous paint. Paint must comply with MIL-P-6883.

Circuit conductor entering the fixture must be terminated on 2-position terminal blocks.

Both ends of fixture must have holes for 1-inch conduit. Unused holes must be plugged with pressed metal closures.

86-6.04B Pedestrian Overcrossing Fixtures

Fixture shell must consist of:

1. Top section and a door section of extruded 6063-T5 aluminum alloy, each with a nominal 1/8 inch wall thickness
2. 2 cast-end sections of 319 aluminum alloy
3. Internal wireway cover of 505-H32 aluminum alloy

Top section and door section must be joined together on one side by a continuous hinge formed as part of the 2 extrusions and must overlay to allow locking on the other side. Hinge must be treated with a silicone grease that will prevent the entrance of water by capillary action.

Wireway cover with 3/16 inch hemmed ends up and terminal blocks and circuit conductors must be inserted before welding end sections and must provide clearance at both ends for conductors. Cover must be fastened by at least two 1/4 inch No. 4 self-threading sheet metal screws with binding head and blunt point. You may substitute blind rivets of equivalent strength.

One or more bronze sash chains or other device must be included to prevent door from opening to an extent that will damage the hinge.

Lampholder must include heat-resistant circular cross section neoprene sealing gasket, silver-coated contacts, and waterproofed lead entrance for use with a 1,500 mA rapid start fluorescent lamp.

Ballast must be at most 13-1/4 inches long.

Circuit conductors entering the fixture must be terminated on 3-position terminal blocks.

Electrical system of pedestrian overcrossing must be grounded by a No. 8 copper wire installed in conduit from fixture to fixture, from end fixture to conduit fitting on end post and from conduit fitting on end post to grounding bushing in nearest pull box.

Ground wire must be secured to inside of telescoping sleeve end casting where conductors are carried and to the inside of Type LB conduit fitting on end post by a connecting lug and a No. 8 self-threading pan screw.

Lamp, lampholder, ballast, and fixture wire, must be attached to door section. Terminal blocks must be attached to top section or wireway cover.

Three No. 10, solid copper circuit conductors must be installed between terminal blocks as part of each completed fixture.

Before shipment to job site, fixture must be completely manufactured and assembled in the shop.

86-6.05 INDUCTION SIGN LIGHTING FIXTURES

Each induction sign lighting fixture must include housing with door, reflector, refractor or lens, lamp, power coupler, high frequency generator, socket assembly, fuse block, and fuses.

Each induction sign lighting fixture must:

1. Be designed for mounting near the bottom of sign panel on an overhead sign structure.
2. Be an enclosed design and be raintight and corrosion resistant.
3. Have a minimum average rating of 60,000 hours.
4. Be for a wattage of 87 W, 120/240 V(ac).
5. Have a power factor greater than 90 percent and total harmonic distortion less than 10 percent.
6. Be UL approved for wet locations and be FCC Class A-listed.
7. Not exceed 44 pounds in weight.
8. Include the manufacturer's brand name, trademark, model number, serial number, and date of manufacture on packaged assembly. Same information must be permanently marked on the outside and inside of housing.
9. Comply with minimum horizontal footcandle requirement shown on the plans.
10. Be a maximum height of 12 inches above the top of the mounting rails.

If fixture is located so that the light center of the lamp is 55 inches in front of, 1 foot below, and centered on a 10-foot high by 20-foot wide sign panel, the ratio of maximum to minimum illuminance level on the panel must not exceed 12 to 1 in 95 percent of the points measured. Illuminance gradient must not exceed 2 to 1 and is defined as the ratio of minimum illuminance on a 1-foot square of panel to that on an adjacent 1-foot square of panel.

Each fixture must have a mounting assembly that will allow fixture to be mounted on continuous slot channels. Mounting assembly must be either cast aluminum, hot-dip galvanized steel plate, or steel plate that has been galvanized and finished with a polymeric coating system or same finish that is used for housing.

Housing must have a door designed to hold a refractor or lens, and to open without the use of special tools. Housing and door must be manufactured of sheet or cast aluminum, and have a powder coat or polyester paint finish of a gray color resembling unfinished manufacturing. Sheet aluminum must comply with ASTM B 209 or B 209M for 5052-H32 aluminum sheet. External bolts, screws, hinges, hinge pins, and door closure devices must be corrosion resistant.

Housing must include weep holes.

Door must be hinged to housing on side of fixture away from the sign panel and include 2 captive latch bolts or other latching device. Door must be designed to lock in the open position, 50 degrees minimum from the plane of the door opening, with an 85-mph 3-second-wind-gust load striking the door from either side.

Door and housing must be gasketed to be raintight and dusttight. Thickness of gasket must be 1/4 inch, minimum.

Fixture height must be less than 12 inches above the top of mounting rails.

Reflector must be 1 piece, made from specularly finished aluminum protected with an electrochemically applied anodized finish or a chemically applied silicate film, and designed so deposited water due to condensation will drain away. Reflector must be secured to housing with a minimum of 2 screws and removable without removing any fixture parts. Do not attach reflectors to outside of housing.

Refractor or lens must have a smooth exterior and must be manufactured from the material as follows:

Refractor and Lens Material Requirements

Component	Manufactured From
Flat lens	Heat-resistant glass
Convex lens	Heat resistant, high-impact resistant tempered glass
Refractor	Borosilicate heat resistant glass

Refractor and convex lens must be designed or shielded so no fixture luminance is visible if fixture is approached directly from the rear and viewing level is the bottom of the fixture. If a shield is used, it must be an integral part of the door casting.

Each fixture must include an 85 W induction lamp with an interior wall that is fluorescent phosphor-coated. Light output must be at least 70 percent at 60,000 hours. Lamp must have a minimum color-rendering index of 80, be rated at a color temperature of 4,000K and be removable without the use of tools.

Lamp socket must be a porcelain enclosed mogul type with a shell that contains integral lamp grips to assure electrical contact under normal vibration conditions. Center contact must be spring-loaded. Shell and center contact must be nickel-plated brass. Socket must be rated for 1,500 W and 600 V(ac).

Power coupler must include a construction base with antenna, heat sink, and electrical connection cable, and be designed so it can be removed with common hand tools.

High frequency generator must:

1. Start and operate lamps at an ambient temperature of -25 °C or greater for the rated life of the lamp
2. Operate continuously at ambient air temperatures from -25 °C to 25 °C without reduction in generator life
3. Have a design life of at least 100,000 hours at 55 °C
4. Have an output frequency of 2.65 MHz ± 10 percent
5. Have radio frequency interference that complies with FCC Title 47, Part 18, regulations regarding harmful interference
6. Be replaceable with common hand tools
7. Mounted so the fixture can be used as a heat sink

Conductor terminal must be identified by the component terminal the conductor connects to. Submit a copy of the high frequency generator test methods and results from the manufacturer with each lot of fixtures.

Each fixture must include a barrier-type fuse block for terminating field connections. Fuse block must:

1. Be secured to housing and be accessible without removal of any fixture parts
2. Be mounted to leave a minimum of 1/2 inch air space from sidewalls of housing
3. Be designed for easy removal of fuses with a fuse puller, be rated at 600 V(ac), and have box terminals.

Fuses must be 13/32-inch diameter, 1-1/2 inch long ferrule type and UL or ETL listed. For 120 V(ac) input fixture, only the ungrounded conductor must be fused and there must be a solid link between the neutral and the high frequency generator.

If shown on the plans, include a wire guard to prevent damage to the refractor or lens. Guard must be constructed of 1/4-inch minimum diameter galvanized steel wire, and either hot-dip galvanized or electroplated-zinc coated as specified in ASTM B 633, Service Condition SC4 with a clear chromate dip treatment. Guard elements must be spaced to prevent rocks larger than 1-1/2-inch diameter from passing through.

86-6.06 SIGN LIGHTING FIXTURES FOR FLASHING BEACON

Sign lighting fixture must:

1. Be UL or ETL listed for outdoor installation
2. Include a hood with side outlet tapped for conduit, a symmetrical 10-inch steel reflector with a white porcelain-enamel finish, and a medium base socket
3. Be rated at 150 W minimum

86-6.07 INTERNALLY ILLUMINATED STREET NAME SIGNS

Sign fixture must be:

1. Designed and constructed to prevent deformation or failure when subjected to an 85 mph 3-second-wind-gust load as specified in AASHTO publication, "Standard Specifications for Structural Supports of Highway Signs, Luminaires and Traffic Signals," and its interim revisions
2. Manufactured from all new material and all ferrous parts must be galvanized or cadmium-plated
3. Type A or B signs

Top and bottom must be formed or extruded aluminum and must be attached to formed or cast aluminum end fittings. Housing must be designed for continuous sealing between top and bottom assemblies, and end fittings, and be constructed to resist torsional twist and warp. Opening or removing 1 panel must allow access to the interior of the sign for lamp, ballast, and fuse replacement.

Photoelectric unit sockets are not allowed.

For Type A sign, both sides must be hinged at the top to allow installation or removal of sign panel, and to allow access to interior of sign.

For Type B sign, sign panel must be slide-mounted into housing.

Reflectors may be used to obtain required sign brightness. Reflectors must be formed aluminum with acrylic baked white enamel surface having a minimum reflectance of 0.85.

Sign panel must be slide-mounted or rigid-mounted in a frame, with white legend, symbols, arrows, and border on each face. Background must be green.

Sign panels surface must be evenly illuminated. Average of brightness readings for letters must be 150 foot-lamberts, minimum. Light transmission factor of sign panel must provide a letter to background brightness ratio between 10 to 1 and 20 to 1. Background luminance must not vary by more than 40 percent from the average background brightness reading. Luminance of letters, symbols, and arrows must not vary by more than 20 percent from their average brightness readings.

Sign panels must be translucent, high impact, resistant plastic panels of one of the following:

1. Glass fiber reinforced acrylated resin
2. Polycarbonate resin
3. Cellulose acetate butyrate plastic

Paint on the outside of plastic must be protected by a plastic film that seals the front surface of panel and filters out ultraviolet radiation. Paint must be acrylic plastic type.

Surface must be free of blemishes in the plastic or coating that may impair the serviceability or detract from the general appearance and color matching of sign.

White or green color must not fade or darken when sign is exposed to an accelerated test of ultraviolet light equivalent to 2 years of outdoor exposure. Green color of sign, when not illuminated, must match Color No. 14109 of Federal Standard 595B.

Sign panel must not crack or shatter when a 1-inch diameter, steel ball with a weight of 2.4 ounces is dropped from a height of 8.5 feet above the sign panel to any point of sign panel. For this test, sign panel must be lying in a horizontal position and supported within its frame.

For Type A sign, gasket must be installed between sign panel frame and fixture housing to prevent water entry between frame and fixture housing. Gasket must be uniform and even-textured, and be the closed-cell, sponge-neoprene type, designed for use at temperatures between -20 °C and +74 °C.

Gasket must be neatly applied to thoroughly degreased, clean surface with a suitable heat-resistant adhesive that will not allow the gasket to slip at temperatures between -20 °C and +74 °C.

Ballast must be high power factor type and capable of starting the lamp at -20 °C and above.

Ballast for Type A sign must be rated at 200 mA. Ballasts for Type B sign must be rated at 430 mA. Ballast must be UL or ETL listed for operation on 110 to 125 V(ac), 60 Hz circuits, and comply with ANSI C 82.1 and ANSI C 82.2.

Lampholder must be UL or ETL listed for outdoor use and of the spring-loaded type. Lampholder must have silver-coated contacts and waterproofed entrance leads for use with a rapid-start fluorescent lamp. Removal of lamp from socket must de-energize the primary of ballast. Each lampholder must include heat-resistant, circular cross section, partially-recessed neoprene ring to seal against lamp ends and protect electrical contacts from moisture, dirt or other injurious elements.

Distance between face of lampholders must be designed to provide compression of at least 0.10 inch on the spring-type lampholder when lamp is in place. Lamp must have positive mechanical and electrical contact when lamp is in place. Socket on spring-type lampholder must have sufficient travel to allow lamp installation. Spring must not be a part of current carrying circuit. Lampholder must match lamp requirements and must not increase cathode filament circuit resistance by more than 0.10 Ω.

Lamp must comply with ANSI C 78.

Wiring connections in fixture must be terminated on molded, phenolic, barrier-type, terminal blocks rated at 15 A, 1,000 V(ac), and must have integral-type white waterproof-marking strips. Current carrying parts of terminal blocks must be insulated from fixture with integral plugs or strips to provide protection from line-to-ground flashover voltage. If you choose to use sectionalized terminal blocks, each section must include an integral barrier on each side and be capable of rigid mounting and alignment. Terminal screws must be No. 10, minimum.

Fuses must be Type 3AG, miniature, slow-blowing type with appropriate current and voltage ratings.

Fuseholder must be a panel-mounting type with threaded or bayonet-type knob that grips the fuse tightly for extraction. Use a separate fuse for each ballast.

Screened weep holes must be constructed at strategic locations in members subject to moisture collection.

Fasteners, screws, and hardware must be passive stainless steel, Type 302 or 304, or aluminum Type 6060-T6.

Top of fixture housing must have 2 free-swinging mounting brackets. Each bracket must be adjustable vertically for leveling the sign to either a straight or curved mast arm. Bracket assembly must allow fixture to swing perpendicular to the sign panel.

Hinge pins for the free-swinging brackets must have a minimum diameter of 1/4 inch.

Message, as shown on the plans, must be displayed on both sign panels.

If not shown on the plans, the message and the size of symbols or arrows will be given by the Engineer at your request. Letters must be 8-inch upper case and 6-inch lower case, Series E.

Fixture conductors must be UL- or ETL-listed AWM stranded copper wire with 28 mils, minimum, thermoplastic insulation, rated at 1,000 V(ac) and rated for use at 90 °C. Conductors must be No. 16 minimum and must match color coding of ballast leads.

Conductors within the fixture must be secured with easily removable spring cross straps, not clamped, in the chassis or fixture. Straps must be installed 12 inches apart or less.

Stranded copper conductors connected to screw-type terminals must terminate in approved crimp-type ring connectors.

Splices are not allowed within fixture.

Submit shop drawings showing the message for each sign, including size of letters, symbols or arrows, as shown on the plans. If requested, you must supply, without cost to the State, sufficient samples of materials to be used in the manufacturing of the sign or a complete sign assembly, to allow adequate testing and evaluation of compliance to specified requirements.

86-6.08 PHOTOELECTRIC CONTROLS

Photoelectric controls must be capable of directly switching multiple lighting systems.

86-6.08A Types

Photoelectric control type must comply with the following:

Photoelectric Control Types

Type I	Includes a remote photoelectric unit and a test switch housed in an enclosure.
Type II	Includes a remote photoelectric unit, a separate contactor located in a service equipment enclosure, and a test switch located in service equipment enclosure.
Type III	Includes a remote photoelectric unit, a separate contactor, and a test switch housed in an enclosure.
Type IV	Includes a photoelectric unit that plugs into an EEI-NEMA twist-lock receptacle integral with the luminaire.
Type V	Includes a photoelectric unit, contactor, and test switch located in service equipment enclosure.

A switch to allow manual operation of lighting circuit must be included for each Type I, Type II, Type III, and Type V photoelectric control. Switches must be single-hole mounting toggle type, single-pole, single-throw, rated at 12 A with a voltage rating that matches the circuit. Switches must have an indicating nameplate reading "Auto-Test" and be connected in parallel with the load contacts of the photoelectric unit. Test switches must not have an "OFF" position.

Photoelectric unit for Types I, II, and III photoelectric controls, must be pole-top mounted.

86-6.08B Equipment Details

86-6.08B(1) Photoelectric Unit

Photoelectric unit must:

1. Have an output in response to changing light levels. Response level must remain stable throughout life of control unit.
2. Have a "turn-on" between 1 and 5 footcandles, and a "turn-off" between 1.5 and 5 times "turn-on." Measurements must be made by procedures in EEI-NEMA standards for physical

and electrical interchangeability of light-sensitive control devices used in the control of roadway lighting.

3. Have a EEI-NEMA type receptacle. Mounting brackets must be used where pole-top mounting is not possible. Photoelectric controls must be installed at locations show on the plans and oriented.
4. Be screened to prevent artificial light from causing cycling.
5. Have a supply voltage rating of 60 Hz, 105-130 V(ac), 210-240 V(ac), or 105-240 V(ac), as specified.
6. Have a load rating of 800 W minimum, incandescent, high intensity discharge, or fluorescent.
7. Operate at a temperature range of -20 °C to 55 °C.
8. Have a power consumption less than 10 W.
9. Be housed in a weatherproof enclosure.
10. Have a base with a 3-prong, EEI-NEMA standard, twist-lock plug mounting.
11. Have a "fail-on" feature.

Unit components must not require periodic replacement.

Photoelectric controls, except Type IV and Type V, must include a 4-inch minimum inside diameter, pole-top mounting adaptor containing a terminal block, and cable supports or clamps to support pole wires.

For switching 480 V(ac), 60 Hz circuits, a 100 VA, minimum, 480/120 V(ac) transformer must be installed in the contactor enclosure to allow 120 V(ac) for the photoelectric control unit. If more than 1 photoelectric unit is to be installed at a location, a single transformer with a volt-ampere rating capable of handling the total controlled load, may be used.

86-6.08B(2) Contactor

Contactor must:

1. Have contacts rated to switch the specified lighting load
2. Be normally open
3. Be the mechanical armature type with contacts of fine silver, silver alloy, or superior alternative material

86-6.08B(3) Enclosure

Enclosure for Type I and Type III photoelectric controls must be NEMA 3R. Enclosure must be supplied with a factory-applied rust-resistant prime coat and finish coat. Two applications of paint to match the color of the standard must be applied as specified in Section 86-2.16, "Painting." Enclosure may be hot-dip galvanized instead of painting. A minimum of 2-1/2 inches must be provided between contactor terminals and end of enclosure for wiring connections. Enclosure must be mounted on the same standard as the photoelectric unit at a height of about 6 feet above finished grade.

86-6.08B(4) Terminal Blocks

Terminal blocks must be rated at 25 A, 600 V(ac), molded from phenolic or nylon material, and of the barrier type with plated-brass screw terminals and integral-type marking strips.

86-6.09 TRANSFORMERS

Multiple-to-multiple transformers must be single-phase dry type designed for operation on a 60 Hz supply.

86-6.09A Electrical Requirements

Transformers must have a decal showing a connection diagram. Diagram must show either color-coding or wire-tagging with primary (H1, H2) or secondary (X1, X2) markers, and the primary and secondary voltage and volt-ampere rating. Transformers must comply with the following:

Transformer Electrical Requirements

Transformer Characteristic	Multiple-to-Multiple Unit
Rating	120/480 V(ac), 240/480 V(ac), or 480/120 V(ac)
Efficiency	Exceed 95 percent
Secondary Voltage Regulation and Tolerance	±3 percent from half load to full load

Secondary 480 V(ac) windings must be center-tapped.

86-6.09B Physical Requirements

External leads for multiple-to-multiple secondary connections must be Type USE, No. 10, rated 600 V(ac).

Transformer leads must extend a minimum of 12 inches from the case.

Transformer insulation must be NEMA 185 C or better.

Multiple-to-multiple transformers must withstand the application of 2,200 V(ac) from core to coils and from coil to coil for a 1-minute period.

The above tests must be made immediately after operation of transformer at full load for 24 hours.

Non-submersible transformers must include metal half-shell coil protection, have moisture resistant synthetic varnish impregnated windings, and be suitable for outdoor operation in a raintight enclosure.

Each transformer to be installed in a pull box must be the submersible type and include a handle and a hanger.

86-6.09C Submersible Type Transformers

Submersible type transformers must be securely encased in a rugged corrosion resistant, watertight case and must withstand a 5-day test submerged in 2 feet of salt water, 2 percent salt by weight, with 12-hour on and off periods. The operating periods must be at full load.

Leads of submersible transformers must be brought out through one or more sealed hubs and secured to withstand a 100 pound static pull without loosening or leaking.

86-6.10 (BLANK)

86-6.11 FALSEWORK LIGHTING

86-6.11A General

Falsework lighting must include lighting to illuminate the pavement, portals, and pedestrian walkways at or under openings in the falsework required for traffic.

Lighting for pedestrian walkway illumination must be installed at all pedestrian openings through or under falsework.

Before starting falsework opening construction, you must submit a plan of proposed lighting installations for review and obtain approval. Approval will be made as specified in Section 5-1.02, "Plans and Working Drawings."

You must design falsework lighting so that required maintenance can be performed with a

minimum of inconvenience to public traffic. Closing of traffic lanes for routine maintenance will not be permitted on roadways with posted speed limits greater than 25 mph.

Pavement under falsework with portals less than 150 feet apart and falsework portals must be illuminated only during the hours of darkness as defined in Division 1, Section 280, of the California Vehicle Code. Photoelectric switches must be used to control falsework lighting systems. Pavement under falsework with portals 150 feet or more apart and all pedestrian openings through falsework must be illuminated 24 hours per day.

Lighting fixtures must be aimed to avoid glare to oncoming motorists.

Type NMC cable with No. 12 minimum conductors, with ground wire, must be used. Fasten cable to supporting structure at sufficient intervals to adequately support cable and within 12 inches from every box or fitting. Conductors within 8 feet of ground must be enclosed in a 1/2 inch or larger metal conduit.

Each illumination system must be on a minimum of 1 separate branch circuit at each bridge location. Each branch circuit must be fused, not to exceed 20 A.

For falsework lighting, you must arrange with the serving utility to complete service connections. You must pay for energy, line extension, service, and service hookup costs.

At completion of project or when ordered by the Engineer, falsework lighting equipment will become your property and you must remove it from the job site.

You may propose a lighting plan that fulfills light intensity requirements to the systems specified herein. You must supply sufficient data to allow evaluation of alternative methods.

86-6.11B Pavement Illumination

Illumination of pavement at vehicular openings through falsework must comply with the following:

1. Fixture must include R/FL commercial type floodlamp holder with protective covers.
2. Fixture must be fully adjustable with brackets and locking screws, and allow mounting directly to a standard metal junction box.
3. Lamp must be medium-base 120 V(ac), 120 W, minimum, PAR-38 quartz-halogen floodlamp.
4. A continuous row of fixture types required must be installed at locations and spacing specified. Fixtures must be installed beneath falsework structure, with the end fixtures not further than 10 feet inside portal faces. Fixtures must be installed and energized immediately after the members supporting them have been erected.
5. Fixtures along the sides of the opening must be placed not more than 4 feet behind or 2 feet in front of the roadway face of the temporary railing. Mounting heights of fixtures must be between 12 and 16 feet above the roadway surface and must present an unobstructed light pattern on the pavement.

86-6.11C Portal Illumination

Illumination of falsework portals must comply with the following:

1. On each side of each entrance portal, plywood sheet clearance guides, 4 feet wide by 8 feet high, must be fastened vertically, facing traffic, with the bottom of the panel 3 feet to 4 feet above the roadway. The center of the panel must be located approximately 3 feet horizontally behind the roadway face of the railing. Panels must be freshly painted for each installation with not less than 2 applications of flat white paint. Paint testing will not be required.

2. If ordered by the Engineer, in order to improve the general appearance of the painted surfaces, you must repaint designated areas and that painting will be paid for as extra work as specified in Section 4-1.03D, "Extra Work."
3. Falsework portals must be illuminated on the side facing traffic with 150 W, minimum, PAR reflector floodlamps mounted on the structure directly over each vertical support adjacent to the traveled way, as needed to uniformly illuminate the exterior falsework beam, the clearance guides, and the overhead clearance sign. Each lamp must be supported approximately 16 feet above the pavement and approximately 6 feet in front of the portal face.
4. Portal lighting and clearance guides must be installed on the day that vertical members are erected.

86-6.11D Pedestrian Walkway Illumination

Illumination of pedestrian openings through or under falsework must comply with the following:

1. Fixtures must be flush-mounted in the overhead protection shield and equipped with a damage-resistant clear polycarbonate diffuser lens. Lamps must be standard incandescent 100 W, 120 V(ac).
2. Fixtures must be centered over the passageway at intervals of not more than 15 feet with the end fixtures not more than 7 feet inside the end of the pedestrian openings.
3. Pedestrian passageway light systems must be installed immediately after the overhead protection shield is erected.

86-7 REMOVING, REINSTALLING OR SALVAGING ELECTRICAL EQUIPMENT

86-7.01 REMOVING ELECTRICAL EQUIPMENT

Existing electrical equipment, pull boxes, and conduits, to be removed and not reused or salvaged, become your property and you must dispose of it under Section 7-1.13, "Disposal of Materials Outside the Highway Right of Way." Unused underground conduit may be abandoned in place after all conductors have been removed, except that conduit terminations from conduit to be abandoned must be removed from pull boxes to remain.

Exercise care in salvaging equipment so that it will not be damaged or destroyed. Mast arms must be removed from standards. Luminaires, signal heads, and signal mounting assemblies must be removed from standards and mast arms.

Holes resulting from removing pull boxes must be filled with material equivalent to the surrounding material.

86-7.02 REINSTALLING REMOVED ELECTRICAL EQUIPMENT

If removed electrical equipment is to be reinstalled, you must supply all necessary materials and equipment, including signal mounting assemblies, anchor bolts, nuts, washers, and concrete as required to complete the new installation.

Luminaires to be reinstalled must be cleaned and relamped.

Existing materials required to be reused and found to be unsatisfactory by the Engineer must be replaced with new material and the replacement cost will be paid for as extra work as specified in Section 4-1.03D, "Extra Work."

86-8 PAYMENT

86-8.01 PAYMENT

The contract lump sum price or prices paid for signal, ramp metering, flashing beacon, lighting, sign illumination, traffic monitoring station, highway advisory radio systems, closed circuit television

systems, or combinations thereof; for modifying or removing those systems; for temporary systems; or the lump sum or unit prices paid for various units of those systems; or the lump sum or per foot price paid for conduit of the various sizes, types, and installation methods listed in the Engineer's Estimate include full compensation for furnishing all labor, materials, tools, equipment and incidentals, and for doing all the work involved in furnishing and installing, modifying, or removing the systems, combinations or units thereof, including any necessary pull boxes (except if the type required is shown as a separate contract item); excavation and backfill; concrete foundations (except if shown as a separate contract item); pedestrian barricades; furnishing and installing illuminated street name signs; installing sign panels on pedestrian barricades, on flashing beacon standards, and on traffic signal mast arms; restoring sidewalk, pavement and appurtenances damaged or destroyed during construction; salvaging existing materials; and making all required tests, as shown on the plans, as specified in these specifications and the special provisions, and as directed by the Engineer.

If poles for electrical systems are manufactured from a source located more than 300 air-line miles from Sacramento and Los Angeles, the Department will deduct $5,000 for inspection costs for each inspection site. If poles for electrical systems are manufactured from a source located more than 3,000 air-line miles from Sacramento and Los Angeles, the Department will deduct $8,000 for inspection costs for each inspection site.

Full compensation for all additional materials and labor, not shown on the plans or specified, that are necessary to complete the installation of the various systems, is included in the prices paid for the systems, or units thereof, except as provided in Section 86-1.06, "Maintaining Existing and Temporary Electrical Systems," and no additional compensation will be allowed therefor.

If shown as a contract item, the contract price paid per foot for cast-in-drilled-hole concrete pile (signal foundation) includes full compensation for furnishing all labor, materials, tools, equipment, and incidentals, and for doing all the work involved in constructing reinforced concrete pile foundations of the size shown on the Engineer's Estimate, including drilling holes, disposing of the material resulting from drilling holes, furnishing and placing anchor bolt assemblies and reinforcing steel, complete in place, as shown on the plans, and as specified in these specifications and the special provisions, and as directed by the Engineer.

If shown as a contract item, non-reinforced PCC foundations will be measured and paid for by the cubic yard for foundation concrete in the same manner as specified for minor concrete (minor structure) in Section 51, "Concrete Structures."

If shown as a separate contract item by the lump sum or per foot, interconnection conduit and cable includes all interconnection conductors, and conduit and pull boxes containing interconnection cable and no other conductors. The quantity of interconnection conduit and cable to be paid for by the foot is the length of that conduit. Compensation for conduit containing interconnection cable and other conductors is included in the contract price paid for the item requiring the other conductors.

Full compensation for furnishing, installing, maintaining, and removing falsework lighting equipment is included in the contract prices paid for the items of work involved in the structure that requires the falsework lighting and no additional compensation will be allowed therefor.

86-9 SUPPLEMENTAL TO SECTION

86-9.01 DESCRIPTION

Traffic Signals, flashing beacons, lighting and maintaining existing traffic management system elements during construction shall conform to the provisions in this section, Section 86, "Electrical Systems," of the Standard Specifications and these special provisions.

Locations of lighting installations are shown on the electrical plans.

Lighting equipment is included in the following structures:

A. Pedestrian Bridge Barrier
B. Retaining Wall Barrier

86-9.02 COST BREAK-DOWN

Cost break-downs shall conform to the provisions in Section 86-1.03, "Cost Break-Down," of the Standard Specifications and these special provisions.

The Engineer shall be furnished a cost break-down for each contract lump sum item of work described in this Section 10-3.

The cost break-down shall be submitted to the Engineer for approval within 15 days after the contract has been approved. The cost break-down shall be approved, in writing, by the Engineer before any partial payment for the items of electrical work will be made.

The cost break-down shall include the following items in addition to those listed in the Standard Specifications:

ELECTRICAL WORK COST BREAK-DOWN				
UNIT DESCRIPTION	UNIT	APPROXIMATE QUANTITY	VALUE	AMOUNT
Luminaires: type YCA (housing, lamps, ballast & enclosure)	EA	83		
Luminaires: spare lamps	EA	4		
Luminaires: spare faceplates	EA	4		
Meter Pedestal: enclosure including meter, electrical distribution, contactors & photoelectric unit	EA	1		
Meter Pedestal: SDG&E meter disconnect	LS	1		
Meter Pedestal: removal of existing	LS	1		
Meter Pedestal: SDG&E meter connection	LS	1		
Electrical Trench (from meter pedestal to electrical pullbox): materials – 2" PVC conduit and fittings	LF	120		
Electrical Trench: #10 THW conductors	LF	780		
Electrical Trench: excavation	LF	60		
Electrical Trench: backfill	LF	60		
Pullbox: CALTRANS #6 pullbox	EA	1		
Branch Circuits (from electrical pullbox to luminaires): ¾" PVC conduit and fittings	LF	1700		
Branch Circuits: #10 THW conductors	LF	3450		
Branch Circuits: conduit expansion fittings	EA	4		

TOTAL $_____

86-9.03 MAINTAINING EXISTING AND TEMPORARY ELECTRICAL SYSTEMS

Traffic signal system shutdowns shall be limited to periods approved by the Resident Engineer.

86-9.04 CAST-IN-DRILLED-HOLE CONCRETE PILE FOUNDATIONS

GENERAL

Summary

This work includes constructing cast-in-drilled-hole concrete pile foundations for traffic signal and lighting standards.

Comply with Section 86-2.03, "Foundations," of the Standard Specifications.

MATERIALS

Concrete must contain not less than 590 pounds of cementitious material per cubic yard.

CONSTRUCTION

For standards located in sidewalk areas, the pile foundation must be:

1. Placed to final sidewalk grade before the sidewalk is placed
2. Square for the top 4 inches

Use sleeve nuts on Type 1-A 1-B standards. The bottom of the base plate must be flush with finished grade.

PAYMENT

Payment for cast-in-drilled-hole concrete pile foundations shall be included in the lump sum price for Signals, Lighting and Electrical systems and no additional compensation will be allowed.

STANDARDS, STEEL PEDESTALS, AND POSTS

Standards, steel pedestals, and posts for traffic signal and lighting standards shall conform to the provisions in Section 86-2.04, "Standards, Steel Pedestals and Posts," of the Standard Specifications, "Steel Structures" of these special provisions, and the following requirements.

Steel bolts not designated on the plans as high-strength (HS) or stainless steel shall be for general applications and shall conform to the requirements in ASTM Designation: A 307.

Anchor bolts shall conform to the requirements in ASTM Designation: F 1554, Grade 36. High-strength (HS) anchor bolts shall conform to the requirements in ASTM Designation: F 1554, Grade 105.

Where the plans refer to the side tenon detail at the end of the signal mast arm, the applicable tip tenon detail may be substituted.

The sign mounting hardware shall be installed at the locations shown on the plans.

Handhole reinforcement rings for standards, steel pedestals, and posts shall be continuous around the handholes.

86-9.06 CONDUIT

Conduit to be installed underground shall be Type 1 or Type 3 unless otherwise specified.

The conduit in a foundation and between a foundation and the nearest pull box shall be Type 3. The conduit in poured concrete structures shall be Type 3.

When Type 3 conduit is placed in a trench (not in pavement or under portland cement concrete sidewalk), after the bedding material is placed and the conduit is installed, the trench shall be backfilled to not less than 4 inches above the conduit with minor concrete conforming to the

provisions in Section 90-10, "Minor Concrete," of the Standard Specifications, except the concrete shall contain not less than 421 pounds of cementitious material per cubic yard. The remaining trench shall be backfilled to finished grade with backfill material.

Conduit runs shown on the plans to be located behind curbs may be installed in the street, within 3 feet of, and parallel with the face of the curb, by the trenching in pavement method in conformance with the provisions in Section 86-2.05C, "Installation," of the Standard Specifications. Pull boxes shall be located behind the curb or at the locations shown on the plans.

After conductors have been installed, the ends of conduits terminating in pull boxes, service equipment enclosures, and controller cabinets shall be sealed with an approved type of sealing compound.

At those locations where conduit is required to be installed under pavement and underground facilities designated as high priority subsurface installation under Govt Code § 4216 et seq. exist, conduit shall be placed by the trenching in pavement method in conformance with the provisions in Section 86-2.05C, "Installation," of the Standard Specifications.

Minimum cover for underground conduits below roadways shall be 24 inches. Minimum cover for underground conduits not under roadways shall be 18 inches.

86-9.07 PULL BOXES

Grout shall not be placed in the bottom of pull boxes.

86-9.08 CONDUCTORS, CABLES, AND WIRING

Splices shall be insulated by "Method B" or, at the Contractor's option, splices of conductors shall be insulated with heat-shrink tubing of the appropriate size after thoroughly painting the spliced conductors with electrical insulating coating.

Splices shall be avoided in underground pullboxes. Where necessary to splice conductors in pullboxes, splices shall be epoxy-cast suitable for continuous immersion in water.

Conductors shall be wrapped around projecting end of conduit in pull boxes, as shown on the plans. Cables shall be secured to the projecting end of conduit in pull boxes to prevent pulling of cables without removing the securing device.

86-9.09 SERVICE

Continuous welding of exterior seams in service equipment enclosures is not required.

Service equipment enclosures shall be the aluminum type.

Each service shall be provided with 1 main circuit breaker which shall disconnect ungrounded service entrance conductors.

Circuit breakers used as service disconnect equipment shall have a minimum interrupting capacity of 42,000 A, rms, for 120/240 V(ac) services and 30,000 A, rms, for 480 V(ac) services.

Coordinate disconnection and reconnection of existing electrical service with serving utility company (SDG&E).

86-9.10 NUMBERING ELECTRICAL EQUIPMENT

The placement of numbers on electrical equipment will be done by others.

Self-adhesive reflective numbers and edge sealer shall be Contractor-furnished.

The numbers and edge sealer shall be placed on the equipment where designated by the Engineer.

Where new numbers are to be placed on existing or relocated equipment, the existing numbers shall be removed.

Reflective numbers shall be applied to a clean surface. Only the edges of the numbers shall be treated with edge sealer.

5-digit, self-adhesive equipment numbers shall be placed for all service pedestals. On service pedestals, the numbers shall be placed on the front door.

86-9.11 CONTROLLER CABINETS

The 332cabinets shall conform to the provisions in Section 86-3.01, "Controller Assemblies," of the Standard Specifications and these special provisions.

The Engineer shall be notified when each 332 cabinet is ready for the functional test. The functional test will be conducted by State forces.

The following equipment shall be provided with each power distribution assembly:

1. Two each of Duplex NEMA 5-20R controller receptacle
2. One each of 30 A, 1-pole, 120 V(ac) Main circuit breaker
3. One each of 15 A, 1- pole, 120 V(ac) circuit breaker
4. Two each of 20 A, 1- pole, 120 V(ac) circuit breaker

Three shelves shall be furnished as shown on the plans. Each shelf shall be attached to the tops of 2 supporting angles with 4 screws. Supporting angles shall extend from the front to the back rails. The front of the shelf shall abut the front member of the mounting cage. The shelves shall be arranged as shown on the plans. The angles shall be designed to support a minimum of 50 pounds each. The horizontal side of each angle shall be a minimum of 3 inches. The angles shall be vertically adjustable.

Three terminal blocks shall be furnished as shown on the plans. Terminal blocks shall conform to the requirements in Chapter 6 of the TEES, except that the screw size shall be 8-32.

A maintenance manual shall be furnished for all controller units, auxiliary equipment, vehicle detector sensor units, control units, and amplifiers. The maintenance and operation manuals may be combined into one manual. The maintenance manual or combined maintenance and operation manual shall be submitted at the time the controllers are delivered for testing or, if ordered by the Engineer, before purchasing. The maintenance manual shall include the following:

1. Specifications
2. Design characteristics
3. General operation theory
4. Function of all controls
5. Trouble shooting procedure (diagnostic routine)
6. Block circuit diagram
7. Geographical layout of components
8. Schematic diagrams
9. List of replaceable component parts with stock numbers

86-9.12 VEHICLE SIGNAL FACES AND SIGNAL HEADS

Type SV-1-T mountings with 5 sections and SV-2-TD mountings shall be bolted to the standard through the upper pipe fitting in the same manner shown for bolting the terminal compartment.

86-9.13 LIGHT EMITTING DIODE SIGNAL MODULE

GENERAL

Summary

This work includes installing LED signal module. Comply with Section 86, "Electrical Systems," of the Standard Specifications.

Use LED signal module as the light source for the following traffic signal faces:

1. 12-inch section
2. 8-inch section
3. 12-inch arrow section
4. 12-inch U-turn section
5. 12-inch bicycle section
6. 12-inch programmed visibility (PV) section
7. 12-inch lane control section

Submittals

Before shipping LED signal modules to job site, submit the following to the Transportation Laboratory:

1. Delivery form including district number, EA, and contact information
2. List containing all LED signal module serial numbers anticipated for use
3. LED signal modules

Quality Control and Assurance

Module must be one listed on the Pre-Qualified Products List for LED traffic signals at:

http://www.dot.ca.gov/hq/esc/approved_products_list

The State will test LED signal module shipments as specified in ANSI/ASQ Z1.4.. Testing will be completed within 30 days of delivery to the Transportation Laboratory. LED signal modules tested or submitted for testing must be representative of typical production units. LED and circular LED signal modules will be tested as specified in California Test 604. Arrow, U-turn, and bicycle LED signal modules will be tested as specified in California Test 3001. All parameters of the specification may be tested on the modules. LEDs must be spread evenly across the module. LED arrow indication must provide the minimum initial luminous intensity listed. Measurements will be performed at the rated operating voltage of 120 V(ac).

Delays resulting from submittal of non-compliant materials do not relieve you from executing the contract within the allotted time. Non-compliant materials will be rejected. You must resubmit new LED for retesting and pick up the failed units within 7 days of notification. You must provide new LED signal modules and allow a minimum of 30 days for the retest. You must pay for all shipping and handling costs related to testing and retesting. Delays resulting from resubmittal and retesting are your responsibility and no extra time will be allowed.

After testing, you must pick up the tested LED signal modules from the Transportation Laboratory and deliver to the job site.

Warranty

The manufacturer must provide a written warranty against defects in materials and workmanship for LED signal modules for a minimum period of 48 months after installation of LED signal modules. Replacement LED signal modules must be provided within 15 days after receipt of failed LED modules at your expense. The State pays for shipping the failed modules to you. All warranty documentation must be submitted to the Engineer before installation. Replacement LED signal modules must be delivered to State Maintenance Electrical Shop at _____.

MATERIALS

Minimum power consumption for LED signal module must be 5 W.

LED signal module must have an operational lifecycle rating of 48 months. During the operational lifecycle, LED signal module must meet all parameters of this specification.

LED signal module must be designed for installation in the door frame of standard traffic signal housing.

LED signal module must:

1. Be 4 pounds maximum weight
2. Be manufactured for 12-inch circular, arrow, U-turn, bicycle, and lane control section
3. Be from the same manufacturer
4. Be the same model for each size
5. Be sealed units with:

    5.1. 2 color-coded conductors for power connection, except for lane control LED signal modules use 3 color-coded conductors.
    5.2. Printed circuit board and power supply contained inside and complying with Chapter 1, Section 6 of TEES published by the Department.
    5.3. Lens that is:

        5.3.1. Integral to the units
        5.3.2. Convex or flat with a smooth outer surface
        5.3.3. Made of UV stabilized plastic or glass, and withstands UV exposure from direct sunlight for 48 months without exhibiting evidence of deterioration

    5.4. 1-piece EPDM gasket

6. Include 3-foot long conductors with quick disconnect terminals attached
7. Be sealed in door frames
8. Fit into existing traffic signal section housing and comply with ITE publication, Equipment and Material Standards, Chapter 2, "Vehicle Traffic Control Signal Heads"

Individual LEDs must be wired so catastrophic loss or failure of 1 LED will not result in loss of more than 5 percent of the signal module light output. Failure of an individual LED in a string must not result in loss of entire string or other indication.

No special tools for installation are allowed.

Comply with Section 9.01 of ITE publication, Equipment and Material Standards, Chapter 2, "Vehicle Traffic Control Signal Heads" for arrow indications.

LED signal module must:

1. Be weather tight and connect directly to electrical wiring.
2. Be capable of optical unit replacement.
3. Be a single, self-contained device, ready for installation into traffic signal housing.
4. Have manufacturer's name, trademark, model number, serial number, lot number, month and year of manufacture, and required operating characteristics, including rated voltage, power consumption, and volt-ampere, permanently marked on the back of the module.
5. Have a symbol of module type and color. Symbol must be an inch in diameter. Color must be written out in 0.50 inch high letters next to the symbol.
6. Be AlInGaP technology for red and yellow indications and gallium nitride technology for green indications.
7. Be ultra bright type rated for 100,000 hours of continuous operation from -40 °C to +74 °C.
8. Have a maximum power consumption as follows:

Power Consumption Requirements

LED Signal Module Type	Power Consumption (Watts)					
	Red		Yellow		Green	
	25 °C	74 °C	25 °C	74 °C	25 °C	74 °C
12-inch circular	11	17	22	25	15	15
8-inch circular	8	13	13	16	12	12
12-inch arrow	9	12	10	12	11	11
12-inch U-turn	9	12	10	12	11	11
Bicycle	11	17	22	25	15	15
Programmed Visibility	11	17	22	25	15	15
Lane Control (X)	9	12	--	--	--	--
Lane Control (Arrow)	--	--	--	--	11	11

Lens may be tinted, or may use transparent film or materials with similar characteristics to enhance "ON/OFF" contrasts. Tinting or other materials to enhance "ON/OFF" contrast must not affect chromaticity and must be uniform across the face of the lens.

If polymeric lens is used, surface coating or chemical surface treatment must be applied for front surface abrasion resistance.

Power supply must be integral to the module.

Internal components must be adequately supported to withstand mechanical shock and vibration from high winds and other sources.

Lens and LED signal module material must comply with the ASTM specifications for that material.

Enclosures containing either the power supply or electronic components of LED signal module, except lenses, must be made of UL94VO flame-retardant material.

If a specific mounting orientation is required, the LED signal module must have prominent and permanent vertical markings for accurate indexing and orientation within the signal housing. Markings must include an up arrow, or the word "UP" or "TOP."

LED signal module must meet or exceed the following values when operating at 25 °C:

Minimum Initial Intensities for Circular Indications (cd)

	8-inch			12-inch		
Angle (v,h)	Red	Yellow	Green	Red	Yellow	Green
2.5, ±2.5	157	314	314	399	798	798
2.5, ±7.5	114	228	228	295	589	589
2.5, ±12.5	67	133	133	166	333	333
2.5, ±17.5	29	57	57	90	181	181
7.5, ±2.5	119	238	238	266	532	532
7.5, ±7.5	105	209	209	238	475	475
7.5, ±12.5	76	152	152	171	342	342
7.5, ±17.5	48	95	95	105	209	209
7.5, ±22.5	21	43	43	45	90	90
7.5, ±27.5	12	24	24	19	38	38
12.5, ±2.5	43	86	86	59	119	119
12.5, ±7.5	38	76	76	57	114	114
12.5, ±12.5	33	67	67	52	105	105
12.5, ±17.5	24	48	48	40	81	81
12.5, ±22.5	14	29	29	26	52	52
12.5, ±27.5	10	19	19	19	38	38
17.5, ±2.5	19	38	38	26	52	52
17.5, ±7.5	17	33	33	26	52	52
17.5, ±12.5	12	24	24	26	52	52
17.5, ±17.5	10	19	19	26	52	52
17.5, ±22.5	7	14	14	24	48	48
17.5, ±27.5	5	10	10	19	38	38

Minimum Luminance for Arrows, U-turn, Bicycle, Lane Control, and PV Indications (FL)

	Red	Yellow	Green
Arrow Indication	1,605	3,210	3,210
U-turn Indication	1,605	3,210	3,210
Bicycle Indication	1,605	1,605	1,605
Lane Control Indication (X)	1,605	--	--
Lane Control Indication (Arrow)	--	--	1,605
PV Indication (cd at 2.5°±2.5°)	91	91	91

48 months when operating over a temperature range of -40 °C to + 74 °C. Yellow LED signal module must meet or exceed the following illumination values for 48 months, when operating at 25 °C:

Minimum Maintained Intensities for Circular Indications (cd)

	8-inch			12-inch		
Angle (v,h)	Red	Yellow	Green	Red	Yellow	Green
2.5, ±2.5	133	267	267	339	678	678
2.5, ±7.5	97	194	194	251	501	501
2.5, ±12.5	57	113	113	141	283	283
2.5, ±17.5	25	48	48	77	154	154
7.5, ±2.5	101	202	202	226	452	452
7.5, ±7.5	89	178	178	202	404	404
7.5, ±12.5	65	129	129	145	291	291
7.5, ±17.5	41	81	81	89	178	178
7.5, ±22.5	18	37	37	38	77	77
7.5, ±27.5	10	20	20	16	32	32
12.5, ±2.5	37	73	73	50	101	101
12.5, ±7.5	32	65	65	48	97	97
12.5, ±12.5	28	57	57	44	89	89
12.5, ±17.5	20	41	41	34	69	69
12.5, ±22.5	12	25	25	22	44	44
12.5, ±27.5	9	16	16	16	32	32
17.5, ±2.5	16	32	32	22	44	44
17.5, ±7.5	14	28	28	22	44	44
17.5, ±12.5	10	20	20	22	44	44
17.5, ±17.5	9	16	16	22	44	44
17.5, ±22.5	6	12	12	20	41	41
17.5, ±27.5	4	9	9	16	32	32

Minimum Maintained Luminance for Arrow, U-turn, Bicycle, Lane Control, and PV Indications (FL)

	Red	Yellow	Green
Arrow Indication	1,610	3,210	3,210
U-turn Indication	1,610	3,210	3,210
Bicycle Indication	1,610	1,610	1,610
Lane Control Indication (X)	1,610	--	--
Lane Control Indication (Arrow)	--	--	1,610
PV Indication (at 2.5°±2.5°)	91	91	91

LED signal module must comply with the following chromaticity requirements for 48 months when operating over a temperature range of -40 °C to +74 °C.

Chromaticity Standards (CIE Chart)

Red	Y: not greater than 0.308, or less than 0.998 -x
Yellow	Y: not less than 0.411, nor less than 0.995 - x, nor greater than 0.452
Green	Y: not less than 0.506 - 0.519x, nor less than 0.150 + 1.068x, nor more than 0.730 - x

LED signal module must operate:

1. At a frequency of 60 Hz ± 3 Hz, over a voltage range from 95 V(ac) to 135 V(ac), without perceptible flicker to the unaided eye. Fluctuations of line voltage must have no visible effect on luminous intensity of the indications. Rated voltage for measurements must be 120 V(ac).
2. Compatible with currently used controller assemblies, including solid state load switches, flashers, and conflict monitors. Comply with TEES Chapters 3 and 6. If a 20 mA alternating current or less is applied to the unit, the voltage read across the 2 leads must be 15 V(ac) or less.

Wiring and terminal block must comply with Section 13.02 of ITE publication, Equipment and Material Standards, Chapter 2, "Vehicle Traffic Control Signal Heads." Electrical connection for each Type 1 LED signal module must be 2 secured, color-coded, 3-foot long, 600 V(ac), 20 AWG minimum stranded jacketed copper wires. Wires must comply with NEC, rated for service at +105 °C.

LED signal module on-board circuitry must:

1. Include voltage surge protection to withstand high-repetition noise transients. The voltage surge protection must comply with NEMA Standard TS2, Section 2.1.6.
2. Comply with FCC, Title 47, SubPart B, Section 15 regulations for Class A emission limits for electronic noise.

LED signal module must provide a power factor of 0.90 or greater.

Total harmonic distortion from current and voltage induced into an alternating current power line by LED signal module must not exceed 20 percent at an operating temperature of 25 °C.

When power is applied to LED signal module, light emission must occur within 90 ms.

86-9.14 LIGHT EMITTING DIODE PEDESTRIAN SIGNAL FACE MODULES

GENERAL

Summary

This work includes installing LED pedestrian signal face (PSF) module into standard Type A pedestrian signal housing. Comply with Section 86, "Electrical Systems," of the Standard Specifications.

Submittals

PSF modules to job site, submit the following to the Transportation Laboratory:

1. Delivery form including district number, EA, and contact information
2. List containing all LED PSF module serial numbers anticipated for use
3. LED PSF modules

Quality Control and Assurance

Module must be one listed on the Pre-Qualified Products List for LED traffic signals at:

http://www.dot.ca.gov/hq/esc/approved_products_list

The State will test LED PSF module shipments as specified in ANSI/ASQ Z1.4.. Testing will be completed within 30 days of delivery to the Transportation Laboratory. LED PSF modules tested or submitted for testing must be representative of typical production units. LED PSF modules will be tested as specified in California Test 606. All parameters of the specification may be tested on the modules.

Delays resulting from submittal of non-compliant materials do not relieve you from executing the contract within the allotted time. Non-compliant materials will be rejected. You must resubmit new LED for retesting and pick up the failed units within 7 days of notification. You must provide new LED PSF modules and allow a minimum of 30 days for the retest. You must pay for all shipping and handling costs related to testing and retesting. Delays resulting from resubmittal and retesting are your responsibility and no extra time will be allowed.

After successful testing, you must pick up the tested LED PSF modules from the Transportation Laboratory and deliver to the job site.

Warranty

The manufacturer must provide a written warranty against defects in materials and workmanship for LED PSF modules for a minimum period of 48 months after installation of LED PSF modules. Replacement LED PSF modules must be provided within 15 days after receipt of failed LED PSF modules at your expense. The State pays for shipping the failed modules to you. All warranty documentation must be submitted to the Engineer before installation. Replacement LED PSF modules must be delivered to State Maintenance Electrical Shop at _____.

MATERIALS

LED PSF module must:

1. Be from the same manufacturer.
2. Be installed in standard Type A pedestrian signal housing, "UPRAISED HAND" and "WALKING PERSON." Do not include reflectors.
3. Use LED as the light source.
4. Be designed to mount behind or replace face plates of standard Type A housing as specified in ITE publication, Equipment and Material Standards, Chapter 3, "Pedestrian Traffic Control Signal Indications" and the "California MUTCD."
5. Have a minimum power consumption of 10 W.
6. Use required color and be ultra bright type rated for 100,000 hours of continuous operation from -40 °C to +74 °C.
7. Be able to replace signal lamp optical units and pedestrian signal faces with both LED and incandescent light sources.
8. Fit into pedestrian signal section housings without modifications to the housing. The housing must comply with ITE publication, Equipment and Materials Standards, Chapter 3, "Pedestrian Traffic Control Signal Heads."
9. Be a single, self-contained device, not requiring on-site assembly for installation into standard Type A housing.
10. Have the following information permanently marked on the back of module:
    10.1. Manufacturer's name
    10.2. Trademark

10.3. Model number
10.4. Serial number
10.5. Lot number
10.6. Month and year of manufacture
10.7. Required operating characteristics, as follows:

10.7.1. Rated voltage
10.7.2. Power consumption
10.7.3. Volt-ampere (VA)
10.7.4. Power factor

11. Have prominent and permanent vertical markings for accurate indexing and orientation within the signal housing if a specific mounting orientation is required. Markings must include an up arrow, or the word "UP" or "TOP." Marking must be a minimum of 1-inch diameter.

Circuit board and power supply must be contained inside the LED PSF modules. Circuit board must comply with Chapter 1, Section 6 of TEES published by the Department.

Individual LEDs must be wired so catastrophic loss or failure of 1 LED will not result in loss of more than 5 percent of the PSF module light output. Failure of an individual LED in a string must not result in the loss of entire string or other indication.

LEDs must be evenly distributed in each indication. Do not use outline forms.

No special tools for installation are allowed.

Installation of the LED PSF module into pedestrian signal face must require only removal of lenses, reflectors, lamps, and existing LED modules.

Power supply for LED PSF module must be integral to the module. Power supply for each symbol must be isolated to avoid turn-on conflict.

Assembly and manufacturing processes for LED PSF module must assure that all internal components are adequately supported to withstand mechanical shock and vibration from high winds and other sources.

Material used for LED PSF module must comply with ASTM D 3935.

Enclosures containing either the power supply or electronic components of LED PSF module, except lenses, must be made of UL94VO flame-retardant material.

Color of "UPRAISED HAND" symbol must be portland orange.

Color of "WALKING PERSON" symbol must be lunar white.

Each symbol must not be less than 10 inches high and 6.5 inches wide. Uniformity ratio of illuminated symbols must not exceed 4 to 1 between highest and lowest luminance areas. Symbols must comply with ITE publication, Equipment and Material Standards, Chapter 3, "Pedestrian Traffic Control Signal Indications," and the "California MUTCD."

LED PSF module must maintain an average luminance value over 48 months of continuous use in signal operation for a temperature range of -40 °C to +74 °C. In addition, LED PSF modules must meet or exceed the following luminance values upon initial testing at 25 °C.

Luminance Values

PSF module	Luminance
UPRAISED HAND	1,094 FL
WALKING PERSON	1,547 FL

Color output of LED PSF module must comply with chromaticity requirements in Section 5.3 of ITE publication, Equipment and Material Standards, Chapter 3, "Pedestrian Traffic Control Signal Indications."

Measured chromaticity coordinates of LED PSF module must comply with the following chromaticity requirements for 48 months when operating over a temperature range of -40 °C to +74 °C.

Chromaticity Standards (CIE Chart)

UPRAISED HAND (portland orange)	Not greater then 0.390, nor less than 0.331, nor less than 0.997-X
WALKING PERSON (lunar white)	X: not less than 0.280, nor greater than 0.320 Y: not less than 1.055*X - 0.0128, nor greater than 1.055*X + 0.0072

LED PSF module maximum power consumption must not exceed the following values:

Power Consumption Requirements

PSF module	Power Consumption @ 24ºC	Power Consumption @ 74ºC
UPRAISED HAND	10.0 W	12.0 W
WALKING PERSON	9.0 W	12.0 W

Wiring and terminal block must comply with Section 13.02 of ITE publication, Equipment and Material Standards, Chapter 2, "Vehicle Traffic Control Signal Heads." The LED PSF module must be supplied with spade lugs and 3 secured, color-coded, 3-foot long, 600 V(ac), 20 AWG minimum stranded jacketed copper wires. Wires must comply with NEC, rated for service at +105 °C.

LED PSF module must operate:

1. At a frequency of 60 Hz ± 3 Hz over a voltage range from 95 V(ac) to 135 V(ac) without perceptible flicker to the unaided eye. Fluctuations of line voltage must have no visible effect on luminous intensity of the indications. Rated voltage for measurements must be 120 V(ac).
2. Compatible with currently used State controller assemblies including solid state load switches, flashers, and conflict monitors. Comply with TEES Chapters 3 and 6. If a 20 ma alternating current or less is applied to the unit, the voltage read across the 2 leads must be 15 V(ac) or less.

LED PSF module on-board circuitry must:

1. Include voltage surge protection to withstand high-repetition noise transients. The voltage surge protection must comply with NEMA Standard TS2, Section 2.1.6.
2. Comply with FCC, Title 47, SubPart B, Section 15 regulations for Class A emission limits for electronic noise.

LED PSF module must provide a power factor of 0.90 or greater.

Total harmonic distortion from current and voltage induced into an alternating current power line by LED PSF module must not exceed 20 percent at an operating temperature of 25 °C.

The LED PSF module circuitry must prevent perceptible light emission to the unaided eye when a voltage, 50 V(ac) or less is applied to the unit.

When power is applied to LED PSF module, light emission must occur within 90 ms.

The "UPRAISED HAND" and "WALKING PERSON" symbol indications must be electrically

isolated from each other. Sharing a power supply or interconnect circuitry between the 2 indications is not allowed.

86-9.15 DETECTORS

Loop detector sensor units will be contractor furnished and are included in the lump sum cost of Signals, Lighting and Electrical Systems.

Loop wire shall be Type 1.

Loop detector lead-in cable shall be Type B.

For Type E detector loops, sides of the slot shall be vertical and the minimum radius of the slot entering and leaving the circular part of the loop shall be 1-1/2 inches. Slot width shall be a maximum of 5/8 inch. Loop wire for circular loops shall be Type 2. Slots of circular loops shall be filled with elastomeric sealant or hot melt rubberized asphalt sealant.

Slots in portland cement concrete shall be filled with elastomeric sealant or hot-melt rubberized asphalt sealant, or shall be filled with an epoxy sealant conforming to the provisions in Section 95-2.09, "Epoxy Sealant for Inductive Loops," of the Standard Specifications.

86-9.16 EMERGENCY VEHICLE DETECTOR SYSTEM

Each traffic signal shall have an emergency vehicle detector system which shall conform to the details shown on the plans and these special provisions.

GENERAL

Each emergency vehicle detector system shall consist of an optical emitter assembly or assemblies located on the appropriate vehicle and an optical detector/discriminator assembly or assemblies located at the traffic signal.

Emitter assemblies are not required for this project except units for testing purposes to demonstrate that the systems perform as specified. Tests shall be conducted in the presence of the Engineer as described below under "System Operation" during the signal test period. The Engineer shall be given a minimum of 2 working days notice prior to performing the tests.

Each system shall permit detection of 2 classes of authorized vehicles. Class I (mass transit) vehicles shall be detected at ranges of up to 1,000 feet from the optical detector. Class II (emergency) vehicles shall be detected at ranges up to 1,800 feet from the optical detector.

Class I signals (those emitted by Class I vehicles) shall be distinguished from Class II signals (those emitted by Class II vehicles) on the basis of the modulation frequency of the light from the respective emitter. The modulation frequency for Class I signal emitters shall be 9.639 Hz ±0.110 Hz. The modulation frequency for Class II signal emitters shall be 14.035 Hz ±0.250 Hz.

A system shall establish a priority of Class II vehicle signals over Class I vehicle signals and shall conform to the requirements in Section 25352 of the California Vehicle Code.

EMITTER ASSEMBLY

Each emitter assembly, provided for testing purposes, shall consist of an emitter unit, an emitter control unit, and connecting cables.

General

Each emitter assembly, including lamp, shall operate over an ambient temperature range of -34°C to +60°C at both modulation frequencies and operate continuously at the higher frequency for a minimum of 3,000 hours at 25°C ambient before failure of the lamp or other components.

Each emitter unit shall be controlled by a single, maintained-contact switch on the respective emitter control unit. The switch shall be located to be readily accessible to the vehicle driver. The control unit shall contain a pilot light to indicate that the emitter power circuit is energized and shall

generate only one modulating code, either that for Class I vehicles or that for Class II vehicles.

Functional

Each emitter unit shall transmit optical energy in one direction only.

The signal from each Class I signal emitter unit shall be detectable at a distance of 1,000 feet when used with a standard optical detection/discriminator assembly and filter to eliminate visible light. Visible light shall be considered eliminated when the output of the emitter unit with the filter is less than an average of 0.0003-candela per energy pulse in the wavelength range of 380 nm to 750 nm when measured at a distance of 10 feet. A Certificate of Compliance, conforming to the requirements in Section 6-1.07, "Certificates of Compliance," of the Standard Specifications shall be submitted to the Engineer with each Class I emitter unit.

The signal from each Class II signal emitter unit shall be detectable at a distance of 1,800 feet when used with a standard optical detection/discriminator assembly.

be available from the manufacturer of the system. A certified performance report shall be furnished with each assembly.

Electrical

Each emitter assembly shall provide full light output with input voltages of between 12.5 V (dc) and 17.5 V (dc). An emitter assembly shall not be damaged by input voltages up to 7.5 V (dc) above supply voltage. The emitter assembly shall not generate voltage transients, on the input supply, which exceed the supply voltage by more than 4 volts.

Each emitter assembly shall consume not more than 100 W at 17.5 V (dc) and shall have a power input circuit breaker rated at 10 A to 12 A, 12 V (dc).

The design and circuitry of each emitter shall permit its use on vehicles with either negative or positive ground without disassembling or rewiring of the unit.

Mechanical

Each emitter unit shall be housed in a weatherproof corrosion-resistant housing. The housing shall be provided with facilities to permit mounting on various types of vehicles and shall have provision for aligning the emitter unit properly and for locking the emitter unit into this alignment.

Each emitter control unit shall be provided with hardware to permit the unit to be mounted in or on an emergency vehicle or mass transit vehicle. Where required for certain emergency vehicles, the emitter control unit and exposed controls shall be weatherproof.

OPTICAL DETECTION/DISCRIMINATOR ASSEMBLY

General

Each optical detection/discriminator assembly shall consist of one or more optical detectors, connecting cable and a discriminator module.

Each assembly, when used with standard emitters, shall have a range of at least 1,000 feet for Class I signals and 1,800 feet for Class II signals. Standard emitters for both classes of signals shall be available from the manufacturer of the system. Range measurements shall be taken with all range adjustments on the discriminator module set to "maximum".

Optical Detector

Each optical detector shall be a waterproof unit capable of receiving optical energy from two separately aimable directions. The horizontal angle between the 2 directions shall be variable from 180 degrees to 5 degrees.

The reception angle for each photocell assembly shall be a maximum of 8 degrees in all directions about the aiming axis of the assembly. Measurements of reception angle will be taken at a range of 1,000 feet for a Type I emitter and at a range of 1,800 feet for a Type II emitter.

Internal circuitry shall be solid state and electrical power shall be provided by the associated discriminator module.

Each optical detector shall be contained in a housing, which shall include 2 rotatable photocell assemblies, an electronic assembly and a base. The base shall have an opening to permit mounting on a mast arm or a vertical pipe nipple, or suspension from a span wire. The mounting opening shall have female threads for 3/4 inch conduit. A cable entrance shall be provided which shall have male threads and gasketing to permit a waterproof cable connection. Each detector shall have weight of less than 2.5 pounds and shall present a maximum wind load area of 36 square inches. The housing shall be provided with weep holes to permit drainage of condensed moisture.

Each optical detector shall be installed, wired and aimed as specified by the manufacturer.

Cable

Optical detector cable (EV-C) shall meet the requirements of IPCEA-S-61-402/NEMA WC 5, Section 7.4, 600-V (ac) control cable, 75°C, Type B, and the following:

A. The cable shall contain 3 conductors, each of which shall be No. 20 (7 x 28) stranded, tinned copper with low-density polyethylene insulation. Minimum average insulation thickness shall be 25 mils. Insulation of individual conductors shall be color coded: 1-yellow, 1-blue, 1-orange.
B. The shield shall be either tinned copper braid or aluminized polyester film with a nominal 20 percent overlap. Where film is used, a No. 20 (7 x 28) stranded, tinned, bare drain wire shall be placed between the insulated conductors and the shield and in contact with the conductive surface of the shield.
C. The jacket shall be black polyvinyl chloride with minimum ratings of 600 V (ac) and 80°C and a minimum average thickness of 43 mils. The jacket shall be marked as required by IPCEA/NEMA.
D. The finished outside diameter of the cable shall not exceed 0.35-inch.
E. The capacitance, as measured between any conductor and the other conductors and the shield, shall not exceed 48 pf per foot at 1000 Hz.
F. The cable run between each detector and the controller cabinet shall be continuous without splices or shall be spliced only as directed by the detector manufacturer.

Discriminator Module

Each discriminator module shall be designed to be compatible and usable with a Model 170 controller unit and to be mounted in the input file of a Model 332 or Model 336 controller cabinet, and shall conform to the requirements of Chapter I of the State of California, Department of Transportation, "Traffic Signal Control Equipment Specifications."

Each discriminator module shall be capable of operating 2 channels, each of which shall provide an independent output for each separate input.

Each discriminator module, when used with its associated detectors, shall perform the following:

A. Receive Class I signals at a range of up to 1,000 feet and Class II signals at a range of up to 1,800 feet.
B. Decode the signals, on the basis of frequency, at 9.639 Hz ± 0.119 Hz for Class I signals and 14.035 Hz ± 0.255 Hz for Class II signals.
C. Establish the validity of received signals on the basis of frequency and length of time received. A signal shall be considered valid only when received for more than 0.50-second. No combination of Class I signals shall be recognized as a Class II signal regardless of the number of signals being received, up to a maximum of 10 signals. Once a valid signal has been recognized, the effect shall be held by the module in the event of temporary loss of the

signal for a period adjustable from 4.5 seconds to 11 seconds in at least 2 steps at 5 seconds ± 0.5 second and 10 seconds ± 0.5 second.

D. Provide an output for each channel that will result in a "low" or grounded condition of the appropriate input of a Model 170 controller unit. For Class I signals the output shall be a 6.25 Hz ± 0.1 percent, rectangular waveform with a 50 percent duty cycle. For Class II signals the output shall be steady.

Each discriminator module shall receive electric power from the controller cabinet at either 24 V (dc) or 120 V (ac).

Each channel together with the channel's associated detectors shall draw not more than 100 mA at 24 V (dc) or more than 100 mA at 120 V (ac). Electric power, one detector input for each channel and one output for each channel shall terminate at the printed circuit board edge connector pins listed below:

BOARD EDGE CONNECTOR PIN ASSIGNMENT

A	DC ground		
B	+24 V (dc)	P	(NC)
C	(NC)		
D	Detector input, Channel A	R	(NC)
E	+24V (dc) to detectors	S	(NC)
F	Channel A output (C)	T	(NC)
		U	(NC)
H	Channel A output (E)	V	(NC)
J	Detector input, Channel B	W	Channel B Output (C)
K	DC Ground to detectors	X	Channel B Output (E)
L	Chassis ground	Y	(NC)
M	AC-	Z	(NC)
N	AC+		

(C) Collector, Slotted for Keying
(E) Emitter, Slotted for Keying
(NC) Not connected, cannot be used by manufacturer for any purpose.

Two auxiliary inputs for each channel shall enter each module through the front panel connector. Pin assignment for the connector shall be as follows:

A. Auxiliary detector 1 input, Channel A
B. Auxiliary detector 2 input, Channel A
C Auxiliary detector 1 input, Channel B
D. Auxiliary detector 2 input, Channel B

Each channel output shall be an optically isolated NPN open collector transistor capable of sinking 50 mA at 30 V (ac) and shall be compatible with the Model 170 controller unit inputs.

Each discriminator module shall be provided with means of preventing transients received by the detector from affecting the Model 170 controller assembly.

Each discriminator module shall have a single connector board and shall occupy one slot width of the input file. The front panel of each module shall have a handle to facilitate withdrawal and the following controls and indicators for each channel:

A. Three separate range adjustments each for both Class I and Class II signals.

B. A 3-position, center-off, momentary contact switch, one position (down) labeled for test operation of Class I signals, and one position (up) labeled for test operation of Class II signals.
C. A "signal" indication and a "call" indication each for Class I and for Class II signals. The "signal" indication denotes that a signal above the threshold level has been received. A "call" indication denotes that a steady, validly coded signal has been received. These 2 indications may be accomplished with a single indication lamp; "signal" being denoted by a flashing indication and "call" with a steady indication.

In addition, the front panel shall be provided with a single circular, bayonet-captured, multi-pin connector for 2 auxiliary detector inputs for each channel. Connector shall be a mechanical configuration conforming to the requirements in Military Specification MIL-C-26482 with 10-4 insert arrangement, such as Burndy Trim Trio Bantamate Series, consisting of the following:

A. Wall mounting receptacle, G0B10-4PNE with SM20M-1S6 gold plated pins.
B. Plug, G6L10-4SNE with SC20M-1S6 gold plated sockets, cable clamp and strain relief that shall provide for a right angle turn within 2-1/2 inches maximum from the front panel surface of the discriminator module.

Cabinet Wiring

The Model 332 cabinet has provisions for connections between the optical detectors, the discriminator module and the Model 170 controller unit.

Wiring for a Model 332 cabinet shall conform to the following:

A. Slots 12 and 13 of input file "J" have each been wired to accept a 2-channel module.
B. Field wiring for the primary detectors, except 24-V (dc) power, shall terminate on either terminal board TB-9 in the controller cabinet or on the rear of input file "J," depending on cabinet configuration. Where TB-9 is used, position assignments shall be as follows:

Position	Assignment
4	Channel A detector input, 1st module (Slot J-12)
5	Channel B detector input, 1st module (Slot J-12)
7	Channel A detector input, 2nd module (Slot J-13)
8	Channel B detector input, 2nd module (Slot J-13)

The 24-V (dc) cabinet power will be available at Position 1 of terminal board TB-1 in the controller cabinet.

Field wiring for the auxiliary detectors shall terminate on terminal board TB-O in the controller cabinet. Position assignments are as follows:

FOR MODULE 1 (J-12)		FOR MODULE 2 (J-13)	
Position	Assignment	Position	Assignment
1	+24V (dc) from (J-12E)	7	+24V (dc) from (J-13E)
2	Detector ground From (J-12K)	8	Detector ground from (J-13K)
3	Channel A auxiliary detector input 1	9	Channel A auxiliary detector input 1
4	Channel A auxiliary detector input 2	10	Channel A auxiliary detector input 2
5	Channel B auxiliary detector input 1	11	Channel B auxiliary detector input 1
6	Channel B auxiliary detector input 2	12	Channel B auxiliary detector input 2

SYSTEM OPERATION

The Contractor shall demonstrate that the components of each system are compatible and will perform satisfactorily as a system. Satisfactory performance shall be determined using the following test procedure during the functional test period:

A. Each system to be used for testing shall consist of an optical emitter assembly, an optical detector, an optical detector cable and a discriminator module.
B. The discriminator modules shall be installed in the proper input file slot of the Model 170 controller assembly.
C. Two tests shall be conducted; one using a Class I signal emitter and a distance of 1,000 feet between the emitter and the detector, the other using a Class II signal emitter and a distance of 1,800 feet between the emitter and the detector. Range adjustments on the module shall be set to "Maximum" for each test.
D. Each test shall be conducted for a period of one hour, during which the emitter shall be operated for 30 cycles, each consisting of a one minute "on" interval and a one minute "off" interval. During the total test period the emitter signal shall cause the proper response from the Model 170 controller unit during each "on" interval and there shall be no improper operation of either the Model 170 controller unit or the monitor during each "off" interval.

86-9.17 PEDESTRIAN PUSH BUTTONS

At the option of the Contractor, pedestrian push button housings may be the plastic type.

86-9.18 LUMINAIRES

Ballast shall be electronic type with total harmonic distortion less than 20%.

No. 7 pull boxes adjacent to each luminaire are not required.

All luminaire faceplates, including spares, shall be powder coated with Tiger Drylac color “RAL 8017” or owner approved equivalent.

86-9.19 PHOTOELECTRIC CONTROLS

Contactors shall be mechanically held type.

86-9.20 REMOVING, REINSTALLING OR SALVAGING ELECTRICAL EQUIPMENT

Salvaged electrical materials shall be hauled to City Maintenance Yard and stockpiled.

The Contractor shall provide the equipment, as necessary, to safely unload and stockpile the material. A minimum notice of 2 business days shall be given prior to delivery.

86-9.21 DISPOSING OF ELECTRICAL EQUIPMENT

Fluorescent light ballasts which contain polychlorinated biphenyls (PCBs) shall be disposed of in conformance with the California Department of Toxic Substances Control (DTSC) Regulations set forth in Title 22, Division 4.5, Chapter 42, of the California Code of Regulations.

Ballasts and transformers that contain polychlorinated biphenyl (PCB) are designated as extremely hazardous wastes and fluorescent tubing and mercury lamps are designated as hazardous wastes under Title 22, Division 4.5, Chapter 11, Article 4.1 and Article 5, of the California Code of Regulations.

The State assumes generator responsibility for these wastes. The Engineer will prepare the Hazardous Waste Manifest for Shipment. Ballasts shall be packaged and transported to a hazardous waste disposal facility. The Contractor shall package and transport fluorescent lights to an appropriately permitted facility.

PAYMENT

Full compensation for hauling, stockpiling, and disposing of transformers, fluorescent tubing and mercury lamps and non-leaking fluorescent light ballasts shall be considered as included in the contract price paid for the various items of work and no additional compensation will be allowed therefor.

86-9.22 PAYMENT

The contract lump sum price or prices paid for signal, lighting, and electrical systems shall include highway lighting at intersections in connection with signals only.

Other roadway lighting on the project shall be considered as included in the contract lump sum price paid for lighting and sign illumination.

Full compensation for hauling and stockpiling electrical materials shall be considered as included in the contract price paid for the item requiring the material to be salvaged and no additional compensation will be allowed therefor.

If any of the fabrication sites for the materials listed are located more than 300 air line miles from both Sacramento and Los Angeles, additional shop inspection expenses will be sustained by the State. Whereas it is and will be impractical and difficult to determine the actual increase in these expenses, it is agreed that payment to the Contractor for furnishing these listed materials from each fabrication site located more than 300 air line miles from both Sacramento and Los Angeles will be reduced $2,000:

1. Service equipment enclosures
2. Telephone demarcation cabinets

SECTION 87 BLANK

Replace Section 87 with:

SECTION 87 MISCELLANEOUS

87-1.01 PREQUALIFIED AND TESTED SIGNING AND DELINEATION MATERIALS

The Department maintains the following list of Prequalified and Tested Signing and Delineation Materials. The Engineer shall not be precluded from sampling and testing products on the list of Prequalified and Tested Signing and Delineation Materials.

The manufacturer of products on the list of Prequalified and Tested Signing and Delineation Materials shall furnish the Engineer a Certificate of Compliance in conformance with the provisions in Section 6-1.07, "Certificates of Compliance," of the Standard Specifications for each type of traffic product supplied.

For those categories of materials included on the list of Prequalified and Tested Signing and Delineation Materials, only those products shown within the listing may be used in the work. Other categories of products, not included on the list of Prequalified and Tested Signing and Delineation Materials, may be used in the work provided they conform to the requirements of the Standard Specifications.

Materials and products may be added to the list of Prequalified and Tested Signing and Delineation Materials if the manufacturer submits a New Product Information Form to the New Product Coordinator at the Transportation Laboratory. Upon a Departmental request for samples, sufficient samples shall be submitted to permit performance of required tests. Approval of materials or products will depend upon compliance with the specifications and tests the Department may elect to perform.

87-1.02 PAVEMENT MARKERS, PERMANENT TYPE

Retroreflective with Abrasion Resistant Surface (ARS)

1. Apex, Model 921AR (4" x 4")
2. Ennis Paint, Models C88 (4" x 4"), 911 (4" x 4") and C80FH
3. Ray-O-Lite, Models "AA" ARC II (4" x 4") and ARC Round Shoulder (4" x 4")
4. 3M Series 290 (3.5" x 4")
5. 3M Series 290 PSA
6. Glowlite, Inc Model 988AR (4" x 4")

Retroreflective with Abrasion Resistant Surface (ARS)

(for recessed applications only)

1. Ennis Paint, Model 948 (2.3" x 4.7")
2. Ennis Paint, Model 944SB (2" x 4")*
3. Ray-O-Lite, Model 2002 (2" x 4.6")
4. Ray-O-Lite, Model 2004 (2" x 4")*

*For use only in 4.5 inch wide (older) recessed slots

Non-Reflective, 4-inch Round

1. Apex Universal (Ceramic)
2. Apex Universal, Models 929 (ABS) and 929PP (Polypropylene)

3. Glowlite, Inc. (Ceramic) and PP (Polypropylene)
4. Hi-Way Safety, Inc., Models P20-2000W and 2001Y (ABS)
5. Interstate Sales, "Diamond Back" (Polypropylene)
6. Novabrite Models Cdot (White) Cdot-y (Yellow), Ceramic
7. Novabrite Models Pdot-w (White) Pdot-y (Yellow), Polypropylene
8. Three D Traffic Works TD10000 (ABS), TD10500 (Polypropylene)
9. Ray-O-Lite, Ray-O-Dot (Polypropylene)

87-1.03 PAVEMENT MARKERS, TEMPORARY TYPE

Temporary Markers for Long Term Day/Night Use (180 days or less)

1. Vega Molded Products "Temporary Road Marker" (3" x 4")
2. Pexco LLC, Halftrack model 25, 26 and 35

Temporary Markers for Short Term Day/Night Use (14 days or less)

(For seal coat or chip seal applications, clear protective covers are required)

1. Apex Universal, Model 932
2. Pexco LLC, Models T.O.M., T.R.P.M., and "HH" (High Heat)
3. Hi-Way Safety, Inc., Model 1280/1281
4. Glowlite, Inc., Model 932

87-1.04 STRIPING AND PAVEMENT MARKING MATERIAL

Permanent Traffic Striping and Pavement Marking Tape

1. Advanced Traffic Marking, Series 300 and 400
2. Brite-Line, Series 1000
3. Brite-Line, "DeltaLine XRP"
4. Swarco Industries, "Director 35" (For transverse application only)
5. Swarco Industries, "Director 60"
6. 3M, "Stamark" Series 380 and 270 ES
7. 3M, "Stamark" Series 420 (For transverse application only)

Temporary (Removable) Striping and Pavement Marking Tape (180 days or less)

1. Advanced Traffic Marking, Series 200
2. Brite-Line, Series 100
3. Garlock Rubber Technologies, Series 2000
4. P.B. Laminations, Aztec, Grade 102
5. Swarco Industries, "Director-2"
6. Trelleborg Industries, R140 Series
7. 3M Series 620 "CR", and Series 780
8. 3M Series A145, Removable Black Line Mask
   (Black Tape: for use only on Hot mix asphalt surfaces)
9. Advanced Traffic Marking Black "Hide-A-Line"
   (Black Tape: for use only on Hot mix asphalt surfaces)
10. Brite-Line "BTR" Black Removable Tape
    (Black Tape: for use only on Hot mix asphalt surfaces)
11. Trelleborg Industries, RB-140
    (Black Tape: for use only on Hot mix asphalt surfaces)

Preformed Thermoplastic (Heated in place)

1. Flint Trading Inc., "Hot Tape"
2. Flint Trading Inc., "Premark Plus"
3. Ennis Paint Inc., "Flametape"

Ceramic Surfacing Laminate, 6" x 6"

1. Highway Ceramics, Inc.

87-1.05 CLASS 1 DELINEATORS

One Piece Driveable Flexible Type, 66-inch

1. Pexco LLC, "Flexi-Guide Models 400 and 566"
2. Carsonite, Curve-Flex CFRM-400
3. Carsonite, Roadmarker CRM-375
4. FlexStake, Model 654 TM
5. GreenLine Model CGD1-66

Special Use Type, 66-inch

1. Pexco LLC, Model FG 560 (with 18-inch U-Channel base)
2. Carsonite, "Survivor" (with 18-inch U-Channel base)
3. Carsonite, Roadmarker CRM-375 (with 18-inch U-Channel base)
4. FlexStake, Model 604
5. GreenLine Model CGD (with 18-inch U-Channel base)
6. Impact Recovery Model D36, with #105 Driveable Base
7. Safe-Hit with 8-inch pavement anchor (SH248-GP1)
8. Safe-Hit with 15-inch soil anchor (SH248-GP2) and with 18-inch soil anchor (SH248-GP3)
9. Safe-Hit RT 360 Post with Soil Mount Anchor (GPS)
10. Shur-Tite Products, Shur-Flex Drivable

Surface Mount Type, 48-inch

1. Bent Manufacturing Company, Masterflex Model MFEX 180-48
2. Carsonite, "Channelizer"
3. FlexStake, Models 704, 754 TM, and EB4
4. Impact Recovery Model D48, with #101 Fixed (Surface-Mount) Base
5. Three D Traffic Works "Channelflex" ID No. 522248W
6. Flexible Marker Support, Flexistiff Model C-9484
7. Safe-Hit, SH 248 SMR

87-1.06 CHANNELIZERS

Surface Mount Type, 36-inch

1. Bent Manufacturing Company, Masterflex Models MF-360-36 (Round) MF-180-36 (Flat) and MFEX 180—36
2. Pexco LLC, Flexi-Guide Models FG300PE, FG300UR, and FG300EFX
3. Carsonite, "Super Duck" (Round SDR-336)
4. Carsonite, Model SDCF03601MB "Channelizer"
5. FlexStake, Models 703, 753 TM, and EB3
6. GreenLine, Model SMD-36
7. Hi-way Safety, Inc. "Channel Guide Channelizer" Model CGC36
8. Impact Recovery Model D36, with #101 Fixed (Surface-Mount) Base

9. Safe-Hit, Guide Post, Model SH236SMA and Dura-Post, Model SHL36SMA
10. Three D Traffic Works "Boomerang" 5200 Series
11. Flexible Marker Support, Flexistiff Model C-9484-36
12. Shur-Tite Products, Shur-Flex

Lane Separation System

1. Pexco LLC, "Flexi-Guide (FG) 300 Curb System"
2. Qwick Kurb, "Klemmfix Guide System"
3. Dura-Curb System
4. Tuff Curb
5. FG 300 Turnpike Curb

87-1.07 CONICAL DELINEATORS, 42-inch

(For 28-inch Traffic Cones, see Standard Specifications)

1. Bent Manufacturing Company "T-Top"
2. Plastic Safety Systems "Navigator-42"
3. TrafFix Devices "Grabber"
4. Three D Traffic Works "Ringtop" TD7000, ID No. 742143
5. Three D Traffic Works, TD7500
6. Work Area Protection Corp. C-42

87-1.08 OBJECT MARKERS

Type "K", 18-inch

1. Pexco LLC, Model FG318PE
2. Carsonite, Model SMD 615
3. FlexStake, Model 701 KM
4. Safe-Hit, Model SH718SMA

Type "Q" Object Markers, 24-inch

1. Bent Manufacturing "Masterflex" Model MF-360-24
2. Pexco LLC, Model FG324PE
3. Carsonite, "Channelizer"
4. FlexStake, Model 701KM
5. Safe-Hit, Models SH824SMA_WA and SH824GP3_WA
6. Three D Traffic Works ID No. 531702W and TD 5200
7. Three D Traffic Works ID No. 520896W
8. Safe-Hit, Dura-Post SHLQ-24 inch

87-1.09 CONCRETE BARRIER MARKERS AND TEMPORARY RAILING (TYPE K) REFLECTORS

Impactable Type

1. ARTUK, "FB"
2. Pexco LLC, Models PCBM-12 and PCBM-T12
3. Duraflex Corp., "Flexx 2020" and "Electriflexx"
4. Hi-Way Safety, Inc., Model GMKRM100
5. Plastic Safety Systems "BAM" Models OM-BARR and OM-BWAR
6. Three D Traffic Works "Roadguide" Model TD 9300

Non-Impactable Type

1. ARTUK, JD Series
2. Plastic Safety Systems "BAM" Models OM-BITARW and OM-BITARA
3. Vega Molded Products, Models GBM and JD
4. Plastic Vacuum Forming, "Cap-It C400"

METAL BEAM GUARD RAIL POST MARKERS

(For use to the left of traffic)

1. Pexco LLC, "Mini" (3" x 10")
2. Creative Building Products, "Dura-Bull, Model 11201"
3. Duraflex Corp., "Railrider"
4. Plastic Vacuum Forming, "Cap-It C300"

87-1.10 CONCRETE BARRIER DELINEATORS, 16-inch

(For use to the right of traffic)

1. Pexco LLC, Model PCBM T-16
2. Safe-Hit, Model SH216RBM
3. Three D Traffic Works "Roadguide" Model 9400

87-1.11 CONCRETE BARRIER-MOUNTED MINI-DRUM (10" x 14" x 22")

1. Stinson Equipment Company "SaddleMarker"

87-1.12 GUARD RAILING DELINEATOR

(Place top of reflective element at 48 inches above plane of roadway)

Wood Post Type, 27-inch

1. Pexco LLC, FG 427 and FG 527
2. Carsonite, Model 427
3. FlexStake, Model 102 GR
4. GreenLine GRD 27
5. Safe-Hit, Model SH227GRD
6. Three D Traffic Works "Guardflex" TD9100
7. New Directions Mfg, NDM27
8. Shur-Tite Products, Shur-Tite Flat Mount

Steel Post Type

1. Carsonite, Model CFGR-327

87-1.13 RETROREFLECTIVE SHEETING

Channelizers, Barrier Markers, and Delineators

1. Avery Dennison T-6500 Series (For rigid substrate devices only)
2. Avery Dennison WR-7100 Series
3. Nippon Carbide Industries, Flexible Ultralite Grade (ULG) II
4. Reflexite, PC-1000 Metalized Polycarbonate
5. Reflexite, AC-1000 Acrylic
6. Reflexite, AP-1000 Metalized Polyester
7. Reflexite, Conformalight, AR-1000 Abrasion Resistant Coating
8. 3M, High Intensity

Traffic Cones, 4-inch and 6-inch Sleeves

1. Nippon Carbide Industries, Flexible Ultralite Grade (ULG) II
2. Reflexite, Vinyl, "TR" (Semi-transparent) or "Conformalight"
3. 3M Series 3840
4. Avery Dennison S-9000C

Drums

1. Avery Dennison WR-6100
2. Nippon Carbide Industries, Flexible Ultralite Grade (ULG) II
3. Reflexite, "Conformalight", "Super High Intensity" or "High Impact Drum Sheeting"
4. 3M Series 3810

Barricades: Type I, Medium-Intensity (Typically Enclosed Lens, Glass-Bead Element)

1. Nippon Carbide Industries, CN8117
2. Avery Dennison, W 1100 series
3. 3M Series CW 44

Barricades: Type II, Medium-High-Intensity (Typically Enclosed Lens, Glass-Bead Element)

1. Avery Dennison, W-2100 Series

Vertical Clearance Signs: Structure Mounted

1. 3M Model 4061, Diamond Grade DG3, Fluorescent Yellow

Signs: Type II, Medium-High-Intensity (Typically Enclosed Lens, Glass-Bead Element)

1. Avery Dennison, T-2500 Series
2. Nippon Carbide Industries, Nikkalite 18000

Signs: Type III, High-Intensity (Typically Encapsulated Glass-Bead Element)

1. Avery Dennison, T-5500A and T-6500 Series
2. Nippon Carbide Industries, Nikkalite Brand Ultralite Grade II
3. 3M 3870 and 3930 Series

Signs: Type IV, High-Intensity (Typically Unmetallized Microprismatic Element)

1. Avery Dennison, T-6500 Series
2. Nippon Carbide Industries, Crystal Grade, 94000 Series
3. Nippon Carbide Industries, Model No. 94847 Fluorescent Orange
4. 3M Series 3930 and Series 3924S

Signs: Type VI, Elastomeric (Roll-Up) High-Intensity, without Adhesive

1. Avery Dennison, WU-6014
2. Novabrite LLC, "Econobrite"
3. Reflexite "Vinyl"
4. Reflexite "SuperBright"
5. Reflexite "Marathon"
6. 3M Series RS20

Signs: Type VII, Super-High-Intensity (Typically Unmetallized Microprismatic Element)

1. 3M Series 3924S, Fluorescent Orange
2. 3M LDP Series 3970

Signs: Type VIII, Super-High-Intensity (Typically Unmetallized Microprismatic Element)

1. Avery Dennison, T-7500 Series
2. Avery Dennison, T-7511 Fluorescent Yellow
3. Avery Dennison, T-7513 Fluorescent Yellow Green
4. Avery Dennison, W-7514 Fluorescent Orange
5. Nippon Carbide Industries, Nikkalite Crystal Grade Series 92800
6. Nippon Carbide Industries, Nikkalite Crystal Grade Model 92847 Fluorescent Orange

Signs: Type IX, Very-High-Intensity (Typically Unmetallized Microprismatic Element)

1. 3M VIP Series 3981 Diamond Grade Fluorescent Yellow
2. 3M VIP Series 3983 Diamond Grade Fluorescent Yellow/Green
3. 3M VIP Series 3990 Diamond Grade
4. Avery Dennison T-9500 Series
5. Avery Dennison, T9513, Fluorescent Yellow Green
6. Avery Dennison, W9514, Fluorescent Orange
7. Avery Dennison, T-9511 Fluorescent Yellow

87-1.14 SPECIALTY SIGNS

1. Reflexite "Endurance" Work Zone Sign (with Semi-Rigid Plastic Substrate)

87-1.15 ALTERNATIVE SIGN SUBSTRATES

Fiberglass Reinforced Plastic (FRP) and Expanded Foam PVC

1. Fiber-Brite (FRP)
2. Sequentia, "Polyplate" (FRP)
3. Inteplast Group "InteCel" (0.5 inch for Post-Mounted CZ Signs, 48-inch or less)(PVC)

Aluminum Composite, Temporary Construction Signs and Permanent Signs up to 4 foot, 7 Inches

1. Alcan Composites "Dibond Material, 80 mils"
2. Mitsubishi Chemical America, Alpolic 350
3. Bone Safety Signs, Bone Light ACM (temporary construction signs only

SECTION 88 ENGINEERING FABRICS

ADD to Section 88 the following sub-section:

88-1.06 Specified Filter Type

Unless otherwise specified, filter fabric for this project must be Class A per Section 88-1.02, "Filtration," of the Standard Specifications.

SECTION 89 BLANK

Replace Section 89 with:

SECTION 89 WELDING

89-1.01 General

Flux cored welding electrodes conforming to the requirements of AWS A5.20 E6XT-4 or E7XT-4 shall not be used to perform welding for this project.

Wherever reference is made to the following AWS welding codes in the Standard Specifications, on the plans, or in these special provisions, the year of adoption for these codes shall be as listed:

AWS Code	Year of Adoption
D1.1	2006
D1.4	2005
D1.5	2002
D1.6	1999

Requirements of the AWS welding codes shall apply unless otherwise specified in the Standard Specifications, on the plans, or in these special provisions. Wherever the abbreviation AWS is used, it shall be equivalent to the abbreviations ANSI/AWS or AASHTO/AWS.

Section 6.1.1.1 of AWS D1.5 is replaced with the following:

Quality Control (QC) shall be the responsibility of the Contractor. As a minimum, the Contractor shall perform inspection and testing of each weld joint prior to welding, during welding, and after welding as specified in this section and as necessary to ensure that materials and workmanship conform to the requirements of the contract documents.

Unless otherwise specified, Sections 6.1.3 through 6.1.4.3 of AWS D1.1, Section 7.1.2 of AWS D1.4, and Sections 6.1.1.2 through 6.1.3.3 of AWS D1.5 are replaced with the following:

The QC Inspector shall be the duly designated person who acts for and on behalf of the Contractor for inspection, testing, and quality related matters for all welding.

Quality Assurance (QA) is the prerogative of the Engineer. The QA Inspector is the duly designated person who acts for and on behalf of the Engineer.

The QC Inspector shall be responsible for quality control acceptance or rejection of materials and workmanship, and shall be currently certified as an AWS Certified Welding Inspector (CWI) in conformance with the requirements in AWS QC1, "Standard for AWS Certification of Welding Inspectors."

The QC Inspector may be assisted by an Assistant QC Inspector provided that this individual is currently certified as an AWS Certified Associate Welding Inspector (CAWI) in conformance with the requirements in AWS QC1, "Standard for AWS Certification of Welding Inspectors." The Assistant QC Inspector may perform inspection under the direct supervision of the QC Inspector provided the assistant is always within visible and audible range of the QC Inspector. The QC Inspector shall be responsible for signing all reports and for determining if welded materials conform to workmanship and acceptance criteria. The ratio of QC Assistants to QC Inspectors shall not exceed 5 to 1.

When the term "Inspector" is used without further qualification, it shall refer to the QC Inspector.

When any work is welded in conformance with the provisions in Section 75, "Miscellaneous Metal," of the Standard Specifications, not including Section 75-1.035, "Bridge Joint Restrainer Units," of the Standard Specifications, Section 6.1.4 of AWS D1.1 is replaced with the following:

The QC Inspector shall be responsible for quality control acceptance or rejection of materials and workmanship and shall be currently certified as an AWS CWI in conformance with the requirements in AWS QC1, "Standard for AWS Certification of Welding Inspectors," or as a Welding Inspector Specialist (WIS) in conformance with the requirements in AWS B5.2, "Specification for the Qualification of Welding Inspector Specialists and Welding Inspector Assistants."

Section 6.14.6, "Personnel Qualification," of AWS D1.1, Section 7.8, "Personnel Qualification," of AWS D1.4, and Section 6.1.3.4, "Personnel Qualification," of AWS D1.5 are replaced with the following:

Personnel performing nondestructive testing (NDT) shall be qualified and certified in conformance with the requirements of the American Society for Nondestructive Testing (ASNT) Recommended Practice No. SNT-TC-1A and the Written Practice of the NDT firm. The Written Practice of the NDT firm shall meet or exceed the guidelines of the ASNT Recommended Practice No. SNT-TC-1A. Individuals who perform NDT, review the results, and prepare the written reports shall be either:

A. Certified NDT Level II technicians, or;
B. Level III technicians who hold a current ASNT Level III certificate in that discipline and are authorized and certified to perform the work of Level II technicians.

Section 6.5.4 of AWS D1.5 is replaced with the following:

The QC Inspector shall inspect and approve each joint preparation, assembly practice, welding technique, joint fit-up, and the performance of each welder, welding operator, and tack welder to make certain that the applicable requirements of this code and the approved Welding Procedure Specification (WPS) are met. The QC Inspector shall examine the work to make certain that it meets the requirements of Sections 3 and 6.26. The size and contour of all welds shall be measured using suitable gages. Visual inspection for cracks in welds and base metal, and for other discontinuities shall be aided by strong light, magnifiers, or such other devices as may be helpful. Acceptance criteria different from those specified in this code may be used when approved by the Engineer.

Section 6.6.5, "Nonspecified NDT Other than Visual," of AWS D1.1, Section 7.6.5 of AWS D1.4 and Section 6.6.5 of AWS D1.5 shall not apply.

For any welding, the Engineer may direct the Contractor to perform NDT that is in addition to the visual inspection or NDT specified in the AWS or other specified welding codes, in the Standard Specifications, or in these special provisions. Except as provided for in these special provisions, additional NDT required by the Engineer, and associated repair work, will be paid for as extra work as provided in Section 4-1.03D, "Extra Work," of the Standard Specifications. Prior to release of welded material by the Engineer, if testing by NDT methods other than those originally specified discloses an attempt to defraud or reveals a gross nonconformance, all costs associated with the repair of the deficient area, including NDT of the weld and of the repair, and any delays caused by the repair, shall be at the Contractor's expense. A gross nonconformance is defined as the sum of planar type rejectable indications in more than 20 percent of the tested length.

When less than 100 percent of NDT is specified for any weld, it is expected that the entire length

of weld meet the specified acceptance-rejection criteria. Should any welding deficiencies be discovered by additional NDT directed or performed by the Engineer that utilizes the same NDT method as that originally specified, all costs associated with the repair of the deficient area, including NDT of the weld and of the weld repair, and any delays caused by the repair, shall be at the Contractor's expense.

Repair work to correct welding deficiencies discovered by visual inspection directed or performed by the Engineer, and any associated delays or expenses caused to the Contractor by performing these repairs, shall be at the Contractor's expense.

The Engineer shall have the authority to verify the qualifications or certifications of any welder, QC Inspector, or NDT personnel to specified levels by retests or other means approved by the Engineer.

Inspection and approval of all joint preparations, assembly practices, joint fit-ups, welding techniques, and the performance of each welder, welding operator, and tack welder shall be documented by the QC Inspector on a daily basis for each day welding is performed. For each inspection, including fit-up, Welding Procedure Specification (WPS) verification, and final weld inspection, the QC Inspector shall confirm and document compliance with the requirements of the AWS or other specified code criteria and the requirements of these special provisions on all welded joints before welding, during welding, and after the completion of each weld.

In addition to the requirements specified in the applicable code, the period of effectiveness for a welder's or welding operator's qualification shall be a maximum of 3 years for the same weld process, welding position, and weld type. If welding will be performed without gas shielding, then qualification shall also be without gas shielding. Excluding welding of fracture critical members, a valid qualification at the beginning of work on a contract will be acceptable for the entire period of the contract, as long as the welder's or welding operator's work remains satisfactory.

In addition to the requirements of AWS D1.1, welding procedures qualification for work welded in conformance with that code shall conform to the following:

When a nonstandard weld joint is to be made using a combination of WPSs, a single test may be conducted combining the WPSs to be used in production, provided the essential variables, including weld bead placement, of each process are limited to those established in Table 4.5.

In addition to the requirements of AWS D1.5, Section 5.12 or 5.13, welding procedures qualification for work welded in conformance with that code shall conform to the following requirements:

A. Unless considered prequalified, fillet welds shall be qualified in each position. The fillet weld soundness test shall be conducted using the essential variables of the WPS as established by the Procedure Qualification Record (PQR).
B. For qualification of joints that do not conform to Figures 2.4 and 2.5 of AWS D1.5, a minimum of two WPS qualification tests are required. The tests shall be conducted using both Figure 5.1 and Figure 5.3. The test conforming to Figure 5.1 shall be conducted in conformance with AWS D1.5, Section 5.12 or 5.13. The test conforming to Figure 5.3 shall be conducted using the welding electrical parameters that were established for the test conducted conforming to Figure 5.1. The ranges of welding electrical parameters established during welding per Figure 5.1 in conformance with AWS D1.5, Section 5.12, shall be further

restricted according to the limits in Table 5.3 during welding per Figure 5.3.

C. Multiple zones within a weld joint may be qualified. The travel speed, amperage, and voltage values that are used for tests conducted per AWS D1.5 Section 5.13 shall be consistent for each pass in a weld joint, and shall in no case vary by more than ±10 percent for travel speed, ±10 percent for amperage, and ±7 percent for voltage as measured from a predetermined target value or average within each weld pass or zone. The travel speed shall in no case vary by more than ±15 percent when using submerged arc welding.

D. For a WPS qualified in conformance with AWS D1.5 Section 5.13, the values to be used for calculating ranges for current and voltage shall be based on the average of all weld passes made in the test. Heat input shall be calculated using the average of current and voltage of all weld passes made in the test for a WPS qualified in conformance with Section 5.12 or 5.13.

E. Macroetch tests are required for WPS qualification tests, and acceptance shall be per AWS D1.5 Section 5.19.3.

F. When a nonstandard weld joint is to be made using a combination of WPSs, a test conforming to Figure 5.3 may be conducted combining the WPSs to be used in production, provided the essential variables, including weld bead placement, of each process are limited to those established in Table 5.3.

G. Prior to preparing mechanical test specimens, the PQR welds shall be inspected by visual and radiographic tests. Backing bar shall be 3 inches in width and shall remain in place during NDT testing. Results of the visual and radiographic tests shall comply with AWS D1.5 Section 6.26.2, excluding Section 6.26.2.2. Test plates that do not comply with both tests shall not be used.

89-1.02 Welding Quality Control

Welding quality control shall conform to the requirements in the AWS or other specified welding codes, the Standard Specifications, and these special provisions.

Unless otherwise specified, welding quality control shall apply when any work is welded in conformance with the provisions in Section 49, "Piling," Section 52, "Reinforcement," Section 55, "Steel Structures," or Section 75-1.035, "Bridge Joint Restrainer Units," of the Standard Specifications.

All welding will require inspection by the Engineer. The Contractor shall request inspection at least 3 business days prior to the beginning of welding for locations within California and 5 business days for locations outside of California. The Contractor shall request inspection at:

http://www.dot.ca.gov/hq/esc/Translab/OSM/smbforms.htm

Continuous inspection shall be provided when any welding is being performed. Continuous inspection, as a minimum, shall include having a QC Inspector within such close proximity of all welders or welding operators so that inspections by the QC Inspector of each welding operation at each welding location does not lapse for a period exceeding 30 minutes.

When joint weld details that are not prequalified to the details of Section 3 of AWS D1.1 or to the details of Figure 2.4 or 2.5 of AWS D1.5 are proposed for use in the work, the joint details, their intended locations, and the proposed welding parameters and essential variables, shall be approved by the Engineer. The Contractor shall allow the Engineer 15 days to complete the review of the proposed joint detail locations. In the event the Engineer fails to complete the review within the time allowed, and if, in the opinion of the Engineer, completion of the work is delayed or interfered with by reason of the Engineer's delay in completing the review, the Contractor will be compensated for any resulting loss, and an extension of time will be granted, in the same manner as provided for in

Section 8-1.09, "Right of Way Delays," of the Standard Specifications. Upon approval of the proposed joint detail locations and qualification of the proposed joint details, welders and welding operators using these details shall perform a qualification test plate using the WPS variables and the joint detail to be used in production. The test plate shall have the maximum thickness to be used in production and a minimum length of 18 inches. The test plate shall be mechanically and radiographically tested. Mechanical and radiographic testing and acceptance criteria shall be as specified in the applicable AWS codes.

The Engineer will witness all qualification tests for WPSs that were not previously approved by the Department. Unless otherwise specified, an approved independent third party will witness the qualification tests for welders or welding operators. The independent third party shall be a current CWI and shall not be an employee of the contractor performing the welding. The Contractor shall allow the Engineer 15 days to review the qualifications and copy of the current certification of the independent third party. In the event the Engineer fails to complete the review within the time allowed, and if, in the opinion of the Engineer, completion of the work is delayed or interfered with by reason of the Engineer's delay in completing the review, the Contractor will be compensated for any resulting loss, and an extension of time will be granted, in the same manner as provided for in Section 8-1.09, "Right of Way Delays," of the Standard Specifications. The Contractor shall notify the Engineer 7 days prior to performing any qualification tests. Witnessing of qualification tests by the Engineer shall not constitute approval of the intended joint locations, welding parameters, or essential variables.

The Contractor shall designate in writing a welding Quality Control Manager (QCM). The QCM shall be responsible directly to the Contractor for the quality of welding, including materials and workmanship, performed by the Contractor and subcontractors.

The QCM shall be the sole individual responsible to the Contractor for submitting, receiving, reviewing, and approving all correspondence, required submittals, and reports to and from the Engineer. The QCM shall be a registered professional engineer or shall be currently certified as a CWI.

Unless the QCM is hired by a subcontractor providing only QC services, the QCM shall not be employed or compensated by any subcontractor, or by other persons or entities hired by subcontractors, who will provide other services or materials for the project. The QCM may be an employee of the Contractor.

Welding inspection personnel or NDT firms to be used in the work shall not be employed or compensated by any subcontractor, or by other persons or entities hired by subcontractors, who will provide other services or materials for the project, except for the following conditions:

A. The work is welded in conformance with AWS D1.5 and is performed at a permanent fabrication or manufacturing facility that is certified under the AISC Quality Certification Program, Category Cbr, Major Steel Bridges and Fracture Critical endorsement F, when applicable.
B. The work is welded in conformance with AWS D1.1 at a permanent pipe manufacturing or fabrication facility that maintains a QC program that is independent from production.

For welding performed at such facilities, the inspection personnel or NDT firms may be employed or compensated by the facility performing the welding provided the facility maintains a QC program that is independent from production.

Prior to submitting the Welding Quality Control Plan (WQCP) required herein, a prewelding meeting between the Engineer, the Contractor's QCM, and a representative from each entity performing welding or inspection for this project, shall be held to discuss the requirements for the WQCP.

The Contractor shall submit to the Engineer, in conformance with the provisions in Section 5-1.02, "Plans and Working Drawings," of the Standard Specifications, 2 copies of a separate WQCP for each subcontractor or supplier for each item of work for which welding is to be performed.
The Contractor shall allow the Engineer 15 days to review the WQCP submittal after a complete plan has been received. No welding shall be performed until the WQCP is approved in writing by the Engineer. In the event the Engineer fails to complete the review within the time allowed, and if, in the opinion of the Engineer, completion of the work is delayed or interfered with by reason of the Engineer's delay in completing the review, the Contractor will be compensated for any resulting loss, and an extension of time will be granted, in the same manner as provided for in Section 8-1.09, "Right of Way Delays," of the Standard Specifications.

An amended WQCP or any addendum to the approved WQCP shall be submitted to, and approved in writing by the Engineer, for proposed revisions to the approved WQCP. An amended WQCP or addendum will be required for revisions to the WQCP, including but not limited to a revised WPS; additional welders; changes in NDT firms, QC, or NDT personnel or procedures; or updated systems for tracking and identifying welds. The Engineer shall have 7 days to complete the review of the amended WQCP or addendum. Work affected by the proposed revisions shall not be performed until the amended WQCP or addendum has been approved. In the event the Engineer fails to complete the review within the time allowed, and if, in the opinion of the Engineer, completion of the work is delayed or interfered with by reason of the Engineer's delay in completing the review, the Contractor will be compensated for any resulting loss, and an extension of time will be granted, in the same manner as provided for in Section 8-1.09, "Right of Way Delays," of the Standard Specifications.

Information regarding the contents, format, and organization of a WQCP, is available at the Transportation Laboratory and at:

http://www.dot.ca.gov/hq/esc/Translab/OSM/smbresources.htm

After final approval of the WQCP, amended WQCP, or addendum, the Contractor shall submit 7 copies to the Engineer of the approved documents. A copy of the Engineer approved document shall be available at each location where welding is to be performed.

A daily production log for welding shall be kept for each day that welding is performed. The log shall clearly indicate the locations of all welding. The log shall include the welders' names, amount of welding performed, any problems or deficiencies discovered, and any testing or repair work performed, at each location. The daily report from each QC Inspector shall also be included in the log.

The following items shall be included in a Welding Report that is to be submitted to the Engineer within 15 days following the performance of any welding:

A. A daily production log.
B. Reports of all visual weld inspections and NDT.
C. Radiographs and radiographic reports, and other required NDT reports.
D. A summary of welding and NDT activities that occurred during the reporting period.

E. Reports of each application of heat straightening.
F. A summarized log listing the rejected lengths of weld by welder, position, process, joint configuration, and piece number.
G. Documentation that the Contractor has evaluated all radiographs and other nondestructive tests and corrected all rejectable deficiencies, and that all repaired welds have been reexamined using the required NDT and found acceptable.

The following information shall be clearly written on the outside of radiographic envelopes: name of the QCM, name of the nondestructive testing firm, name of the radiographer, date, contract number, complete part description, and all included weld numbers, report numbers, and station markers or views, as detailed in the WQCP. In addition, all interleaves shall have clearly written on them the part description and all included weld numbers and station markers or views, as detailed in the WQCP. A maximum of 2 pieces of film shall be used for each interleave.

Reports of all visual inspections and NDT shall be signed by the inspector or technician and submitted daily to the QCM for review and signature prior to submittal to the Engineer. Corresponding names shall be clearly printed or typewritten next to all signatures. Reports of all NDT, whether specified, additional, or informational, performed by the Contractor shall be submitted to the Engineer.

The Engineer will review the Welding Report to determine if the Contractor is in conformance with the WQCP. Except for steel pipe piling, the Engineer shall be allowed 15 days to review the report and respond in writing after the complete Welding Report has been received. Prior to receiving notification from the Engineer of the Contractor's conformance with the WQCP, the Contractor may encase in concrete or cover welds for which the Welding Report has been submitted. However, should the Contractor elect to encase or cover those welds prior to receiving notification from the Engineer, it is expressly understood that the Contractor shall not be relieved of the responsibility for incorporating material in the work that conforms to the requirements of the plans and specifications. Material not conforming to these requirements will be subject to rejection. Should the Contractor elect to wait to encase or cover welds pending notification by the Engineer, and in the event the Engineer fails to complete the review within the time allowed, and if, in the opinion of the Engineer, completion of the work is delayed or interfered with by reason of the Engineer's delay in completing the review, the Contractor will be compensated for any resulting loss, and an extension of time will be granted, in the same manner as provided for in Section 8-1.09, "Right of Way Delays," of the Standard Specifications.

For steel pipe piling, including bar reinforcement in the piling, the Contractor shall allow the Engineer 2 business days to review the Welding Report and respond in writing after the required items have been received. No field welded steel pipe piling shall be installed, and no reinforcement in the piling shall be encased in concrete until the Engineer has approved the above requirements in writing.

In addition to the requirements in AWS D1.1 and AWS D1.5, second-time excavations of welds or base metal to repair unacceptable discontinuities, regardless of NDT method, and all repairs of cracks require prior approval of the Engineer.

The Engineer shall be notified immediately in writing when welding problems, deficiencies, base metal repairs, or any other type of repairs not submitted in the WQCP are discovered, and also of the proposed repair procedures to correct them. For requests to perform second-time repairs or repairs of cracks, the Contractor shall include an engineering evaluation of the proposed repair.

The engineering evaluation, at a minimum, shall address the following:

A. What is causing each defect?
B. Why the repair will not degrade the material properties?
C. What steps are being taken to prevent similar defects from happening again?

The Contractor shall allow the Engineer 7 days to review these procedures. No remedial work shall begin until the repair procedures are approved in writing by the Engineer. In the event the Engineer fails to complete the review within the time allowed, and if, in the opinion of the Engineer, completion of the work is delayed or interfered with by reason of the Engineer's delay in completing the review, the Contractor will be compensated for any resulting loss, and an extension of time will be granted, in the same manner as provided for in Section 8-1.09, "Right of Way Delays," of the Standard Specifications.

The QCM shall sign and furnish to the Engineer, a Certificate of Compliance in conformance with the provisions in Section 6-1.07, "Certificates of Compliance," of the Standard Specifications for each item of work for which welding was performed. The certificate shall state that all of the materials and workmanship incorporated in the work, and all required tests and inspections of this work, have been performed in conformance with the details shown on the plans, the Standard Specifications, and these special provisions.

89-1.03 Welding for Overhead Sign and Pole Structures

The Contractor shall meet the following requirements for any work welded in conformance with the provisions in Section 56-1, "Overhead Sign Structures," or Section 86-2.04, "Standards, Steel Pedestals and Posts," of the Standard Specifications

Welding inspection personnel or NDT firms to be used in the work shall not be employed or compensated by any subcontractor or by other persons or entities hired by subcontractors who will provide other services or materials for the project except for when the welding is performed at a permanent fabrication or manufacturing facility that is certified under the AISC Quality Certification Program. The AISC Certification category for overhead sign structures shall be Simple Steel Bridge Structures (SBR), and the AISC Certification category for pole structures shall be Simple Steel Bridge Structures (SBR) or Standard for Steel Building Structures (STD)

89-1.04 Welding Qualification Audit

Contractors or subcontractors performing welding operations for overhead sign and pole structures shall have successfully completed the Department's "Manufacturing Qualification Audit for Overhead Sign and Pole Structures." Copies of the audit form and procedures for requesting and completing the audit are available at:

http://www.dot.ca.gov/hq/esc/Translab/OSM/smbresources.htm

An audit that was approved by the Engineer no more than 3 years prior to the award of the contract will be acceptable for the entire period of this contract provided the Engineer determines the audit was for the same type of work that is to be performed on this contract.
A list of facilities that have successfully completed the audit and are authorized to provide material for this contract is available at:

http://www.dot.ca.gov/hq/esc/Translab/OSM/smdocuments/Internet_auditlisting.pdf

Successful completion of an audit shall not relieve the Contractor of the responsibility for furnishing materials or producing finished work of the quality specified in these special provisions and as shown on the plans.

89-1.05 Welding Report

A daily production log for welding shall be kept for each day that welding is performed. The log shall clearly indicate the locations of all welding. The log shall include the welders' names, amount of welding performed, any problems or deficiencies discovered, and any testing or repair work performed at each location. The daily report from each QC Inspector shall also be included in the log

A Welding Report shall be submitted to the Engineer 48 hours prior to furnishing a Certificate of Compliance for the material in conformance with the provisions in Section 6-1.07, "Certificates of Compliance," of the Standard Specifications. The Welding Report shall include the following items:

A. A daily production log.
B. Reports of all visual weld inspections and NDT.
C. Radiographs and radiographic reports and other required NDT reports.
D. Summary of welding and NDT activities that occurred during the reporting period.
E. Documentation that the Contractor has evaluated all radiographs and other nondestructive tests and corrected all rejectable deficiencies and all repaired welds have been reexamined by the required NDT and found acceptable.

Payment

Full compensation for conforming to the requirements of "Welding" shall be considered as included in the contract prices paid for the various items of work involved and no additional compensation will be allowed therefore.

SECTION 90 PORTLAND CEMENT CONCRETE
(Issued 11-30-10)

Replace Section 90 with:

SECTION 90 PORTLAND CEMENT CONCRETE

90-1 GENERAL

90-1.01 Description

Portland cement concrete shall be composed of cementitious material, fine aggregate, coarse aggregate, admixtures if used, and water, proportioned and mixed as specified in these specifications.

The Contractor shall determine the mix proportions for concrete in conformance with these specifications.

Minor concrete shall contain not less than 505 pounds of cementitious material per cubic yard unless otherwise specified in these specifications or the special provisions.

Unless otherwise designated on the plans or specified in these specifications or the special provisions, the amount of cementitious material used per cubic yard of concrete in structures or portions of structures shall conform to the following:

Use	Cementitious Material Content (Pounds/CY)
Concrete designated by compressive strength:	
Deck slabs and slab spans of bridges	675 min., 800 max.
Roof sections of exposed top box culverts	675 min., 800 max.
Other portions of structures	590 min., 800 max.
Concrete not designated by compressive strength:	
Deck slabs and slab spans of bridges	675 min.
Roof sections of exposed top box culverts	675 min.
Prestressed members	675 min.
Seal courses	675 min.
Other portions of structures	590 min.
Concrete for precast members	590 min., 925 max.

Except for minor structures, the minimum required compressive strength for concrete in structures or portions of structures shall be the strength specified, or 3600 pounds per square inch at 28 days, whichever is greater.

Except for when a modulus of rupture is specified, the minimum required compressive strength for concrete shall be the strength specified, or 2,500 pounds per square inch, whichever is greater. Concrete shall be proportioned such that the concrete will attain the minimum required compressive strength.

If the specified 28-day compressive strength is 3,600 pounds per square inch or greater, the concrete is designated by compressive strength. For concrete with a 28-day compressive strength greater than 3,600 pounds per square inch, 42 days will be allowed to obtain the specified strength.

For concrete not designated by compressive strength, the Engineer may test the concrete for compressive strength. The concrete will be accepted if the compressive strength at 28 days attains 85 percent or more of the minimum required compressive strength.

Concrete shall be proportioned to conform to the following shrinkage limitations when tested in conformance with the requirements of AASHTO Designation: T 160, modified as follows:

Condition	Maximum Shrinkage of Laboratory Cast Specimens at 28 days Drying (average of 3, %)
Paving and approach slab concrete	0.050
Bridge deck concrete	0.045

Note: Shrinkage requirement is waived for concrete that is used for precast elements.

Shrinkage tests shall be either:

A. Performed by a laboratory accredited to perform AASHTO Designation: T 160, or
B. Performed by a laboratory that maintains a current rating of 3 or better for the Cement and Concrete Reference Laboratory (CCRL) concrete proficiency sample program.

Laboratory cast specimens shall have a 4" x 4" cross section. Specimens shall be removed from the molds 23 ± 1 hours after mixing the concrete and placed in lime water at 73 ± 3 °F to 7 days age. A comparator reading shall be taken at 7 days age and recorded as the initial reading. Specimens then shall be stored in a humidity controlled room maintained at 73 ± 3 °F and 50 ± 4 percent relative humidity for the remainder of the test. Subsequent readings shall be taken at 7, 14, 21, and 28 days drying.

Test data verifying conformance to the shrinkage limitations shall be submitted with the mix design. Shrinkage testing data accepted by the Engineer no more than 3 years prior to the first working day of this contract will be acceptable for this entire contract, provided the data was for concrete with similar proportions and the same materials and material sources to be used on this contract. Concrete shall be considered to have similar proportions if, when compared to concrete to be used on this project, no more than 2 mix design elements are varied. Varied mix design elements shall fall within the tolerances in the following table:

Mix Design Element	Tolerance (±)
Water to cementitious material ratio	0.03
Total water content	5 %
Coarse aggregate (weight per cubic yard)	10 %
Fine aggregate (weight per cubic yard)	10 %
Supplementary cementitious material content	5 %
Admixture (as originally dosed)	25 %

Note: Admixtures must be of the same brand.

Before using concrete or in advance of revising the mix proportions, the Contractor shall submit in writing to the Engineer a copy of the mix design.

Compliance with cementitious material content requirements will be verified in conformance with procedures described in California Test 518 for cement content. For testing purposes, supplementary cementitious material (SCM) shall be considered to be cement. Batch proportions shall be adjusted as necessary to produce concrete having the specified cementitious material content.

If any concrete has a cementitious material, portland cement, or SCM content that is less than the minimum required, the concrete shall be removed. However, if the Engineer determines that the concrete is structurally adequate, the concrete may remain in place and the Contractor shall pay to the State $0.25 for each pound of cementitious material, portland cement, or SCM that is less than the minimum required. The Department may deduct the amount from any moneys due, or that may become due, the Contractor under the contract. The deductions will not be made unless the difference between the contents required and those actually provided exceeds the batching tolerances permitted by Section 90-5, "Proportioning." No deductions will be made based on the results of California Test 518.

The requirements of the preceding paragraph shall not apply to minor concrete.

90-1.02 Strenght Development Time

The time allowed to obtain the minimum required compressive strength as specified in Section 90-1.01, "Description," of the Standard Specifications will be 56 days when the Contractor chooses cementitious material that satisfies the following equation:

$$\frac{(41 \times UF) + (19 \times F) + (11 \times SL)}{TC} \geq 7.0$$

Where:

F = Fly ash or natural pozzolan conforming to the requirements in AASHTO Designation: M 295, Class F or N, including the amount in blended cement, pounds per cubic yard. F is equivalent to either FA or FB as defined in Section 90-2.01C, "Required Use of Supplementary Cementitious Materials," of the Standard Specifications

SL = GGBFS, including the amount in blended cement, pounds per cubic yard

UF = Silica fume, metakaolin, or UFFA, including the amount in blended cement, pounds per cubic yard

TC = Total amount of cementitious material used, pounds per cubic yard

For concrete satisfying the equation above, the Contractor shall test for the modulus of rupture or compressive strength specified for the concrete involved, at least once every 500 cubic yards, at 28, 42, and 56 days. The Contractor shall submit test results to the Engineer and the Transportation Laboratory, Attention: Office of Concrete Materials.

90-2 MATERIALS

90-2.01 Cementious Materials

Unless otherwise specified, cementitious material shall be either a combination of Type II or Type V portland cement and SCM, or a blended cement. No cementitious material shall be used in the work unless it is on the Department's Pre-Qualified Products List at the time of mix design submittal. Information regarding cementitious material qualification and placement on the Department's approved list can be obtained at the Transportation Laboratory.

Cementitious materials used in cast-in-place concrete for exposed surfaces of like elements of a structure shall be from the same sources and of the same proportions.

Cementitious materials shall be protected from moisture until used. Sacked cementitious materials shall be piled to permit access for tallying, inspecting, and identifying each shipment.

Facilities shall be provided to ensure that the various cementitious materials meeting this Section 90-2.01 are kept separate from each other and from other cementitious materials. A storage silo containing a cementitous material shall be emptied before using that silo for a different cementitious material. Blended cements with a percentage of SCM differing by more than 2 percentage points are considered different cementitious materials. Sampling cementitious materials shall be in conformance with California Test 125.

The Contractor shall furnish a Certificate of Compliance for cementitious materials in conformance with the provisions in Section 6-1.07, "Certificates of Compliance." The Certificate of Compliance shall indicate the source by name and location (including country, state, and city). If cementitious material is delivered directly to the job site, the Certificate of Compliance shall be signed by the cementitious material supplier. If the cementitious material is used in ready-mixed concrete or in precast concrete products purchased as such by the Contractor, the Certificate of Compliance shall be signed by the manufacturer of the concrete or product. If blended cement is used, the Certificate of Compliance shall include a statement signed by the blended cement supplier that indicates the actual percentage, by weight, of SCM in the blend. Weight of SCM shall be by weighing device conforming to Section 9-1.01, "Measurement of Quantities," or as determined by chemical analysis.

90-2.01A Cement

Portland cement shall conform to the requirements in ASTM Designation: C 150 except the C_3S content of Type II cement shall not exceed 65 percent.

Blended cement shall conform to the requirements for Portland Blast-Furnace Slag Cement, Type IS (MS) or Portland-Pozzolan Cement, Type IP (MS) in AASHTO Designation: M 240, except that the maximum limits on the pozzolan content shall not apply. Blended cement shall be comprised of Type II or Type V cement and SCM produced either by intergrinding portland cement clinker and SCM, by blending portland cement and either finely ground granulated blast furnace slag or finely divided pozzolan, or a combination of intergrinding and blending.

In addition, Type II portland cement and Type V portland cement shall conform to the following requirements:

A. The cement shall not contain more than 0.60-percent by mass of alkalies, calculated as the percentage of Na_2O plus 0.658 times the percentage of K_2O, when determined by methods as required in AASHTO Designation: T 105; and
B. The autoclave expansion shall not exceed 0.50-percent

Type III portland cement shall be used only as specified or with the approval of the Engineer. Type III portland cement shall conform to the additional requirements listed above for Type II portland cement. The Contractor may use Type III portland cement in the manufacturing of precast concrete.

90-2.01B Supplementary Cementitious Materials

The Contractor may use rice hull ash as a supplementary cementitious material (SCM) to make minor concrete. Rice hull ash shall conform to the requirements in AASHTO Designation: M 321 and the following chemical and physical requirements:

Chemical Requirements	Percent
Silicon Dioxide (SiO_2) [a]	90 min.
Loss on ignition	5.0 max.
Total Alkalies (as Na_2O) equivalent	3.0 max.

Physical Requirements	Percent
Particle size distribution Less than 45 microns Less than 10 microns	 95 50
Strength Activity Index with portland cement [b] 7 days 28 days	 95 (minimum % of control) 110 (minimum % of control)
Expansion at 16 days when testing job materials in conformance with ASTM C 1567 [c]	0.10 max.
Surface Area when testing by nitrogen adsorption in conformance with ASTM D 5604	40.0 m^2/g min.

Notes:
[a] A maximum of 1.0% of the SiO_2 may exist in crystalline form.
[b] When tested in conformance with the requirements for strength activity testing of silica fume in AASHTO Designation: M 307
[c] In the test mix, Type II or Type V portland cement shall be replaced with at least 12% RHA by weight.

Rice hull ash will be considered as a Type UF SCM for the purposes of calculating cementitious material requirements in Section 90-2.01C, "Required Use of Supplementary Cementitious Materials," of the Standard Specifications and these special provisions.

90-2.01C Required Use Of Supplementary Cementitious Materials

General

The amount of portland cement and SCM used in portland cement concrete shall conform to the minimum cementitious material content provisions in Section 90-1.01, "Description," or Section 90-4.05, "Optional Use of Chemical Admixtures," and these specifications.

The SCM content in portland cement concrete shall conform to one of the following:

A. Any combination of portland cement and at least one SCM, satisfying Equations (1) and (2):

Equation (1)

$$\frac{(25 \times UF) + (12 \times FA) + (10 \times FB) + (6 \times SL)}{MC} \geq X$$

Where:

UF = Silica fume, metakaolin, or UFFA, including the amount in blended cement, pounds per cubic yard.
FA = Fly ash or natural pozzolan conforming to the requirements in AASHTO Designation: M 295, Class F or N with a CaO content up to 10 percent, including the amount in blended cement, pounds per cubic yard.
FB = Fly ash or natural pozzolan conforming to the requirements in AASHTO Designation: M 295, Class F or N with a CaO content up to 15 percent, including the amount in blended cement, pounds per cubic yard.
SL = GGBFS, including the amount in blended cement, pounds per cubic yard.

MC = Minimum amount of cementitious material specified, pounds per cubic yard.
X = 1.8 for innocuous aggregate, 3.0 for all other aggregate.

Equation (2)

$$MC - MSCM - PC \geq 0$$

Where:

MC = Minimum amount of cementitious material specified, pounds per cubic yard.
MSCM = The minimum sum of SCMs that satisfies Equation (1) above, pounds per cubic yard.
PC = The amount of portland cement, including the amount in blended cement, pounds per cubic yard.

B. 15 percent of Class F fly ash with at least 48 ounces of $LiNO_3$ solution added per 100 pounds of portland cement. CaO content of the fly ash shall not exceed 15 percent.

Precast Concrete

The SCM content in precast portland cement concrete shall conform to one of the following:

A. Any combination of portland cement and SCM, satisfying the following equation:

Equation (3)

$$\frac{(25 \times UF) + (12 \times FA) + (10 \times FB) + (6 \times SL)}{TC} \geq X$$

Where:

UF = Silica fume, metakaolin, or UFFA, including the amount in blended cement, pounds per cubic yard.
FA = Fly ash or natural pozzolan conforming to the requirements in AASHTO Designation: M 295, Class F or N with a CaO content up to 10 percent, including the amount in blended cement, pounds per cubic yard.
FB = Fly ash or natural pozzolan conforming to the requirements in AASHTO Designation: M 295, Class F or N with a CaO content up to 15 percent, including the amount in blended cement, pounds per cubic yard.
SL = GGBFS, including the amount in blended cement, pounds per cubic yard.
TC = Total amount of cementitious material used in the mix, pounds per cubic yard.
X = 0.0 if precast members are constructed with portland cement concrete using aggregate that is "innocuous" in conformance with the provisions in Section 90-2.02, "Aggregates."
X = 3.0 for all other aggregate.

B. 15 percent of Class F fly ash with at least 48 ounces of $LiNO_3$ solution added per 100 pounds of portland cement. CaO content of the fly ash shall not exceed 15 percent.
C. Any combination of supplementary cementitious material and portland cement may be used if the expansion of cementitious material and aggregate does not exceed 0.10 percent when tested in conformance with the requirements in ASTM C 1567. Test data shall be submitted

with each mix design. Test data accepted by the Engineer no more than 3 years prior to the first working day of this contract will be acceptable for this entire contract, provided the data was for the same concrete mix and the same materials and material sources to be used on this contract.

90-2.01D Cementitious Material and Air Content

Except for concrete listed below, all concrete that is designated as Class 2 and all concrete for use in structures shall contain not less than 630 pounds of cementitious material per cubic yard and shall be air entrained as provided in Section 90-4, "Admixtures," of the Standard Specifications. The air content at time of mixing and prior to placing shall be 3.0 ± 1.0 percent.

A. Paving concrete.
B. Concrete designated by 28-day compressive strength.
C. Concrete specified to have a cementitious material content that exceeds 630 pounds per cubic yard.
D. Seal course concrete.
E. Concrete for deck slabs of bridges and structure approach slabs.
F. Concrete for piling.

90-2.01E Precast Concrete Quality Control

General

Precast concrete quality control shall conform to these special provisions.

Unless otherwise specified, precast concrete quality control shall apply when any precast concrete members are fabricated in conformance with the provisions in Section 49, "Piling," or Section 51, "Concrete Structures," of the Standard Specifications.

Precast concrete quality control shall not apply to precast concrete members that are fabricated from minor concrete.

In addition, precast concrete quality control shall apply when precast members are fabricated for the following work:

A. Precast Bulb Tee Girders

Quality Control (QC) shall be the responsibility of the Contractor. The Contractor's QC inspectors shall perform inspection and testing prior to precasting, during precasting, and after precasting, and as specified in this section and additionally as necessary to ensure that materials and workmanship conform to the details shown on the plans, and to the specifications.

Quality Assurance (QA) is the prerogative of the Engineer. Regardless of the acceptance for a given precast element by the Contractor, the Engineer will evaluate the precast element. The Engineer will reject any precast element that does not conform to the approved Precast Concrete Quality Control Plan (PCQCP), the details shown on the plans, or to these special provisions.

The Contractor shall designate in writing a precast Quality Control Manager (QCM) for each precasting facility. The QCM shall be responsible directly to the Contractor for the quality of precasting, including materials and workmanship, performed by the Contractor and all subcontractors. The QCM shall be the sole individual responsible to the Contractor for submitting, receiving, and approving all correspondence, required submittals, and reports to and from the Engineer. The QCM shall not be employed or compensated by any subcontractor, or other persons or entities hired by

subcontractors, or suppliers, who will provide other services or materials for the project. The QCM may be an employee of the Contractor.

Prior to submitting the PCQCP required herein, a meeting between the Engineer, the Contractor's QCM, and a representative from each entity performing precast concrete operations for this project, shall be held to discuss the requirements for precast quality control.

QC Inspectors shall either be 1) licensed as Civil Engineers in the State of California, or 2) have a current Plant Quality Personnel Certification, Level II, from the Precast/Prestressed Concrete Institute. A QC Inspector shall witness all precast concrete operations.

Precast Concrete Qualifications Audit

Unless otherwise specified, no Contractors or subcontractors performing precast concrete operations for the project shall commence work without having successfully completed the Department's Precast Fabrication Qualification Audit, hereinafter referred to as the audit. Copies of the audit form, along with procedures for requesting and completing the audit, are available at:

http://www.dot.ca.gov/hq/esc/Translab/OSM/smbresources.htm

An audit that was previously approved by the Department no more than 3 years before the award of this contract will be acceptable for the entire period of this contract, provided the Engineer determines the audit is for the same type of work that is to be performed on this contract.

A list of facilities that have successfully completed the audit and are authorized to provide material for this contract is available at:

http://www.dot.ca.gov/hq/esc/Translab/OSM/smdocuments/Internet_auditlisting.pdf

Successful completion of an audit shall not relieve the Contractor of the responsibility for furnishing materials or producing finished work of the quality specified in these special provisions and as shown on the plans.

Precast Concrete Quality Control Plan

Prior to performing any precasting operations, the Contractor shall submit to the Engineer, in conformance with the provisions in Section 5-1.02, "Plans and Working Drawings," of the Standard Specifications, 3 copies of a separate PCQCP for each item of work to be precast. A separate PCQCP shall be submitted for each facility. As a minimum, each PCQCP shall include the following:

A. The name of the precasting firm, the concrete plants to be used, and any concrete testing firm to be used;
B. A manual prepared by the precasting firm that includes equipment, testing procedures, safety plan, and the names, qualifications, and documentation of certifications for all personnel to be used;
C. The name of the QCM and the names, qualifications, and documentation of certifications for all QC inspection personnel to be used;
D. An organizational chart showing all QC personnel and their assigned QC responsibilities;
E. The methods and frequencies for performing all required quality control procedures, including all inspections, material testing, and any required survey procedures for all components of the precast elements including prestressing systems, concrete, grout, reinforcement, steel components embedded or attached to the precast member, miscellaneous metal, and formwork;

F. A system for identification and tracking of required precast element repairs, and a procedure for the reinspection of any repaired precast element. The system shall have provisions for a method of reporting nonconforming precast elements to the Engineer; and
G. Forms to be used for Certificates of Compliance, daily production logs, and daily reports.

The Engineer shall have 4 weeks to review the PCQCP submittal after a complete plan has been received. No precasting shall be performed until the PCQCP is approved in writing by the Engineer.

A PCQCP that was previously approved by the Engineer no more than one year prior to the beginning of work on this contract will be acceptable for the entire period of this contract, provided the Engineer determines the PCQCP is for the same type of work that is to be performed on this contract.

An amended PCQCP or addendum shall be submitted to, and approved in writing by the Engineer, for any proposed revisions to the approved PCQCP. An amended PCQCP or addendum will be required for any revisions to the PCQCP, including but not limited to changes in concrete plants or source materials, changes in material testing procedures and testing labs, changes in procedures and equipment, changes in QC personnel, or updated systems for tracking and identifying precast elements. The Engineer shall have 2 weeks to complete the review of the amended PCQCP or addendum, once a complete submittal has been received. Work that is affected by any of the proposed revisions shall not be performed until the amended PCQCP or addendum has been approved.

After final approval of the PCQCP, amended PCQCP, or addendum, the Contractor shall submit 7 copies to the Engineer of each of these approved documents.

It is expressly understood that the Engineer's approval of the Contractor's PCQCP shall not relieve the Contractor of any responsibility under the contract for the successful completion of the work in conformance with the requirements of the plans and specifications. The Engineer's approval shall neither constitute a waiver of any of the requirements of the plans and specifications nor relieve the Contractor of any obligation thereunder; and defective work, materials, and equipment may be rejected notwithstanding approval of the PCQCP.

Reporting

The QC Inspector shall provide reports to the QCM on a daily basis for each day that precasting operations are performed.

A daily production log for precasting shall be kept by the QCM for each day that precasting operations, including setting forms, placing reinforcement, setting prestressing steel, casting, curing, post tensioning, and form release, are performed. The log shall include the facility location, and shall include a specific description of casting or related operations, any problems or deficiencies discovered, any testing or repair work performed, and the names of all QC personnel and the specific QC inspections they performed that day. The daily report from each QC Inspector shall also be included in the log. This daily log shall be available for viewing by the Engineer, at the precasting facility.

All reports regarding material tests and any required survey checks shall be signed by the person who performed the test or check, and then submitted directly to the QCM for review and signature prior to submittal to the Engineer. Corresponding names shall be clearly printed or type-written next to all signatures.

The Engineer shall be notified immediately in writing when any precasting problems or deficiencies are discovered and of the proposed repair or process changes required to correct them. The Engineer shall have 4 weeks to review these procedures. No remedial work shall begin until the Engineer approves these procedures in writing.

The following items shall be included in a precast report that is to be submitted to the Engineer following the completion of any precast element:

A. Reports of all material tests and any required survey checks;
B. Documentation that the Contractor has evaluated all tests and corrected all rejected deficiencies, and all repairs have been re-examined with the required tests and found acceptable; and
C. A daily production log.

At the completion of any precast element, and if the QCM determines that element is in conformance with these special provisions, the QCM shall sign and furnish to the Engineer, a Certificate of Compliance in conformance with the provisions in Section 6-1.07, "Certificates of Compliance," of the Standard Specifications. This Certificate of Compliance shall be submitted with the precast report. The certificate shall state that all of the materials and workmanship incorporated in the work, and all required tests and inspections of this work, have been performed in conformance with the details shown on the plans and the provisions of the Standard Specifications and these special provisions.

Payment

In the event the Engineer fails to complete the review of 1) a PCQCP, 2) an amended PCQCP or addendum, or 3) a proposed repair or process change, within the time allowed, and if, in the opinion of the Engineer, completion of the work is delayed or interfered with by reason of the Engineer's delay in completing the review, the Contractor will be compensated for any resulting loss, and an extension of time will be granted, in the same manner as provided for in Section 8-1.09, "Right of Way Delays," of the Standard Specifications.

All required repair work or process changes required to correct precasting operation deficiencies, whether discovered by the QCM, QC Inspector, or by the Engineer, and any associated delays or expenses to the Contractor caused by performing these repairs, shall be at the Contractor's expense.

Full compensation for conforming to the requirements of this section shall be considered as included in the contract prices paid for the various items of work involved and no additional compensation will be allowed therefor.

90-2.02 AGGREGATES

To be considered innocuous, aggregate must be on the Department's approved list, "Innocuous Aggregates for use in Concrete." Information regarding aggregate qualification and placement on the Department's approved list can be obtained at the Transportation Laboratory.
Both coarse and fine aggregate must be on the approved list for the aggregate used in concrete to be considered innocuous.

Aggregates shall be free from deleterious coatings, clay balls, roots, bark, sticks, rags, and other extraneous material.

The Contractor shall provide safe and suitable facilities, including necessary splitting devices for obtaining samples of aggregates, in conformance with California Test 125.

Aggregates shall be of such character that it will be possible to produce workable concrete within

the limits of water content provided in Section 90-6.06, "Amount of Water and Penetration."

Aggregates shall have not more than 10 percent loss when tested for soundness in conformance with the requirements in California Test 214. The soundness requirement for fine aggregate will be waived, provided that the durability index, D_f, of the fine aggregate is 60 or greater when tested for durability in conformance with California Test 229.

If the results of any one or more of the Cleanness Value, Sand Equivalent, or aggregate grading tests do not meet the requirements specified for "Operating Range" but all meet the "Contract Compliance" requirements, the placement of concrete shall be suspended at the completion of the current pour until tests or other information indicate that the next material to be used in the work will comply with the requirements specified for "Operating Range."

If the results of either or both the Cleanness Value and coarse aggregate grading tests do not meet the requirements specified for "Contract Compliance," the concrete that is represented by the tests shall be removed. However, if the Engineer determines that the concrete is structurally adequate, the concrete may remain in place, and the Contractor shall pay to the State $3.50 per cubic yard for paving concrete and $5.50 per cubic yard for all other concrete for the concrete represented by these tests and left in place. The Department may deduct the amount from any moneys due, or that may become due, the Contractor under the contract.

If the results of either or both the Sand Equivalent and fine aggregate grading tests do not meet the requirements specified for "Contract Compliance," the concrete which is represented by the tests shall be removed. However, if the Engineer determines that the concrete is structurally adequate, the concrete may remain in place, and the Contractor shall pay to the State $3.50 per cubic yard for paving concrete and $5.50 per cubic yard for all other concrete for the concrete represented by these tests and left in place. The Department may deduct the amount from any moneys due, or that may become due, the Contractor under the contract.

The 2 preceding paragraphs apply individually to the "Contract Compliance" requirements for coarse aggregate and fine aggregate. When both coarse aggregate and fine aggregate do not conform to the "Contract Compliance" requirements, both paragraphs shall apply. The payments specified in those paragraphs are in addition to any payments made in conformance with the provisions in Section 90-1.01, "Description."

No single Cleanness Value, Sand Equivalent, or aggregate grading test shall represent more than 300 cubic yards of concrete or one day's pour, whichever is smaller.

When the source of an aggregate is changed, the Contractor shall adjust the mix proportions and submit in writing to the Engineer a copy of the mix design before using the aggregates.

90-2.02A Coarse Aggregate

Coarse aggregate shall consist of gravel, crushed gravel, crushed rock, reclaimed aggregate, crushed air-cooled iron blast furnace slag or combinations thereof. Crushed air-cooled blast furnace slag shall not be used in reinforced or prestressed concrete.

Reclaimed aggregate is aggregate that has been recovered from plastic concrete by washing away the cementitious material. Reclaimed aggregate shall conform to all aggregate requirements.

Coarse aggregate shall conform to the following quality requirements:

Tests	California Test	Requirements
Loss in Los Angeles Rattler (after 500 revolutions)	211	45% max.
Cleanness Value		
Operating Range	227	75 min.
Contract Compliance	227	71 min.

In lieu of the above Cleanness Value requirements, a Cleanness Value "Operating Range" limit of 71, minimum, and a Cleanness Value "Contract Compliance" limit of 68, minimum, will be used to determine the acceptability of the coarse aggregate if the Contractor furnishes a Certificate of Compliance, as provided in Section 6-1.07, "Certificates of Compliance," certifying that:

A. Coarse aggregate sampled at the completion of processing at the aggregate production plant had a Cleanness Value of not less than 82 when tested in conformance with the requirements in California Test 227; and
B. Prequalification tests performed in conformance with the requirements in California Test 549 indicated that the aggregate would develop a relative strength of not less than 95 percent and would have a relative shrinkage not greater than 105 percent, based on concrete.

90-2.02B Fine Aggregate

Fine aggregate shall consist of natural sand, manufactured sand produced from larger aggregate or a combination thereof. Manufactured sand shall be well graded.
Fine aggregate shall conform to the following quality requirements:

Test	California Test	Requirements
Organic Impurities	213	Satisfactory[a]
Sand Equivalent:		
Operating Range	217	75, min.
Contract Compliance	217	71, min.

[a] Fine aggregate developing a color darker than the reference standard color may be accepted if 95% relative mortar strength is achieved when tested in conformance with ASTM C87.

In lieu of the above Sand Equivalent requirements, a Sand Equivalent "Operating Range" limit of 71, minimum, and a Sand Equivalent "Contract Compliance" limit of 68, minimum, will be used to determine the acceptability of the fine aggregate if the Contractor furnishes a Certificate of Compliance, as provided in Section 6-1.07, "Certificates of Compliance," certifying that:

A. Fine aggregate sampled at the completion of processing at the aggregate production plant had a Sand Equivalent value of not less than 82 when tested by California Test 217; and
B. Prequalification tests performed in conformance with California Test 549 indicated that the aggregate would develop a relative strength of not less than 95 percent and would have a relative shrinkage not greater than 105 percent, based on concrete.

90-2.02C Slag Aggregate

Air-cooled iron blast furnace slag shall not be used to produce aggregate for:

1. Structure backfill material.
2. Pervious backfill material.
3. Permeable material.
4. Reinforced or prestressed portland cement concrete component or structure.
5. Nonreinforced portland cement concrete component or structure for which a Class 1 Surface Finish is required by the provisions in Section 51-1.18B, "Class 1 Surface Finish," of the Standard Specifications.

Aggregate produced from slag resulting from a steel-making process shall not be used for a highway construction project except for the following items:

1. Imported Borrow.
2. Aggregate Subbase.
3. Class 2 Aggregate Base.
4. Hot Mix Asphalt.

Steel slag to be used to produce aggregate for aggregate subbase and Class 2 aggregate base shall be crushed so that 100 percent of the material will pass a 3/4-inch sieve and then shall be control aged for a period of at least 3 months under conditions that will maintain all portions of the stockpiled material at a moisture content in excess of 6 percent of the dry weight of the aggregate.

A supplier of steel slag aggregate shall provide separate stockpiles for controlled aging of the slag. An individual stockpile shall contain not less than 10,000 tons nor more than 50,000 tons of slag. The material in each individual stockpile shall be assigned a unique lot number and each stockpile shall be identified with a permanent system of signs. The supplier shall maintain a permanent record of the dates on which stockpiles are completed and controlled aging begun, of the dates when controlled aging was completed, and of the dates tests were made and the results of these tests. Moisture tests shall be made at least once each week. No credit for aging will be given for the time period covered by tests which show a moisture content of 6 percent or less. The stockpiles and records shall be available to the Engineer during normal working hours for inspection, check testing and review.

The supplier shall provide a Certificate of Compliance in conformance with the provisions in Section 6-1.07, "Certificates of Compliance," of the Standard Specifications. Each stockpile or portion of a stockpile that is used in the work will be considered a lot. The Certificates of Compliance shall state that the steel slag aggregate has been aged in a stockpile for at least 3 months at a moisture content in excess of 6 percent of the dry weight of the aggregate.

Steel slag used for imported borrow shall be weathered for at least 3 months. Prior to the use of steel slag as imported borrow, the supplier shall furnish a Certificate of Compliance in conformance with the provisions in Section 6-1.07, "Certificates of Compliance," of the Standard Specifications. The Certificate of Compliance shall state that the steel slag has been weathered for at least 3 months.

Each delivery of aggregate containing steel slag for use as aggregate subbase or Class 2 aggregate base shall be accompanied by a delivery tag for each load which will identify the lot of material by stockpile number, where the slag was aged, and the date that the stockpile was completed and controlled aging begun.

Air-cooled iron blast furnace slag or natural aggregate may be blended in proper combinations with steel slag aggregate to produce the specified gradings, for those items for which steel slag aggregate is permitted, unless otherwise provided.

Aggregate containing slag shall meet the applicable quality requirements for the items in which the aggregate is used.

The combined slag aggregate shall conform to the specified grading for the item in which it is used. The grading will be determined by California Test 202, modified by California Test 105 when there is a difference in specific gravity of 0.2 or more between the coarse and fine portion of the aggregate or between blends of different aggregates.

No aggregate produced from slag shall be placed within one foot, measured in any direction, of a non-cathodically protected pipe or structure unless the aggregate is incorporated in portland cement concrete pavement, in hot mix asphalt, or in treated base.

When slag is used as aggregate in hot mix asphalt, the K_c factor requirements, as determined by California Test 303, will not apply.

If steel slag aggregates are used to make hot mix asphalt, there shall be no other aggregates used in the mixture, except that up to 50 percent of the material passing the No. 4 sieve may consist of iron blast furnace slag aggregates or natural aggregates, or a combination thereof. If iron blast furnace aggregates or natural aggregates or a combination thereof are used in the mix, each type of aggregate shall be fed to the drier at a uniform rate. The rate of feed of each type of aggregate shall be maintained within 10 percent of the amount set. Adequate means shall be provided for controlling and checking the accuracy of the feeder.

Steel slag aggregate shall be stored separately from iron blast furnace slag aggregate and each type of slag aggregate shall also be stored separately from natural aggregate.

Hot mix asphalt produced from more than one of the following shall not be placed in the same layer: steel slag aggregates, iron blast furnace slag aggregates, natural aggregates or any combination thereof. Once a type of aggregate or aggregates is selected, it shall not be changed without prior approval by the Engineer.

If steel slag aggregates are used to produce hot mix asphalt, and if the specific gravity of a compacted stabilometer test specimen is in excess of 2.40, the quantity of hot mix asphalt to be paid for will be reduced. The stabilometer test specimen will be fabricated in conformance with the procedures in California Test 304 and the specific gravity of the specimen will be determined in conformance with Method C of California Test 308. The pay quantity of hot mix asphalt will be determined by multiplying the quantity of hot mix asphalt placed in the work by 2.40 and dividing the result by the specific gravity of the compacted stabilometer test specimen. Such reduction in quantity will be determined and applied as often as is necessary to ensure accurate results as determined by the Engineer.

90-2.03 WATER

In conventionally reinforced concrete work, the water for curing, for washing aggregates, and for mixing shall be free from oil and shall not contain more than 1,000 parts per million of chlorides as Cl, when tested in conformance with California Test 422, nor more than 1,300 parts per million of sulfates as SO_4, when tested in conformance with California Test 417. In prestressed concrete work, the water for curing, for washing aggregates, and for mixing shall be free from oil and shall not contain more than 650 parts per million of chlorides as Cl, when tested in conformance with California Test 422, nor more than 1,300 parts per million of sulfates as SO_4, when tested in conformance with California Test 417. In no case shall the water contain an amount of impurities that will cause either: 1) a change in the setting time of cement of more than 25 percent when tested in conformance with the requirements in ASTM Designation: C 191 or ASTM Designation: C 266 or 2) a reduction in the compressive strength of mortar at 14 days of more than 5 percent, when tested in conformance with the requirements in ASTM Designation: C 109, when compared to the results obtained with distilled water or deionized water, tested in conformance with the requirements in ASTM Designation: C 109.

In nonreinforced concrete work, the water for curing, for washing aggregates and for mixing shall be free from oil and shall not contain more than 2,000 parts per million of chlorides as Cl, when

tested in conformance with California Test 422, or more than 1,500 parts per million of sulfates as SO_4, when tested in conformance with California Test 417.

In addition to the above provisions, water for curing concrete shall not contain impurities in a sufficient amount to cause discoloration of the concrete or produce etching of the surface.

Water reclaimed from mixer wash-out operations may be used in mixing concrete. The water shall not contain coloring agents or more than 300 parts per million of alkalis ($Na_2O + 0.658\ K_2O$) as determined on the filtrate. The specific gravity of the water shall not exceed 1.03 and shall not vary more than ±0.010 during a day's operations.

90-2.04 Admixture Materials

Admixture materials shall be stored and dispersed in liquid form and conform to the following requirements:

A. Chemical Admixtures—ASTM Designation: C 494.
B. Air-entraining Admixtures—ASTM Designation: C 260.
C. Lithium Nitrate shall be in an aqueous solution conforming to the following:

1. Lithium Nitrate ($LiNO_3$) must be 30 percent +/- 0.5 percent by weight
2. Sulfate (SO_4) must be less than 1000 ppm
3. Chloride (Cl) must be less than 1000 ppm
4. Alkalis ($Na_2O + 0.658\ K_2O$) must be less than 1000 ppm

90-3 AGGREGATE GRADINGS

90-3.01 GENERAL

Before beginning concrete work, the Contractor shall submit in writing to the Engineer the gradation of the primary aggregate nominal sizes that the Contractor proposes to furnish. If a primary coarse aggregate or the fine aggregate is separated into 2 or more sizes, the proposed gradation shall consist of the gradation for each individual size, and the proposed proportions of each individual size, combined mathematically to indicate one proposed gradation. The proposed gradation shall meet the grading requirements shown in the table in this section, and shall show the percentage passing each of the sieve sizes used in determining the end result.

The Engineer may waive, in writing, the gradation requirements in this Section 90-3.01 and in Sections 90-3.02, "Coarse Aggregate Grading," 90-3.03, "Fine Aggregate Grading," and 90-3.04, "Combined Aggregate Gradings," if, in the Engineer's opinion, furnishing the gradation is not necessary for the type or amount of concrete work to be constructed.

Gradations proposed by the Contractor shall be within the following percentage passing limits:

Primary Aggregate Nominal Size	Sieve Size	Limits of Proposed Gradation
1-1/2" x 3/4"	1"	19 - 41
1" x No. 4	3/4"	52 - 85
1" x No. 4	3/8"	15 - 38
1/2" x No. 4	3/8"	40 - 78
3/8" x No. 8	3/8"	50 - 85
Fine Aggregate	No. 16	55 - 75
Fine Aggregate	No. 30	34 - 46
Fine Aggregate	No. 50	16 - 29

Should the Contractor change the source of supply, the Contractor shall submit in writing to the Engineer the new gradations before their intended use.

90-3.02 COARSE AGGREGATE GRADING

The grading requirements for coarse aggregates are shown in the following table for each size of coarse aggregate:

Sieve Sizes	Percentage Passing Primary Aggregate Nominal Sizes							
	1-1/2" x 3/4"		1" x No. 4		1/2" x No. 4		3/8" x No. 8	
	Operating Range	Contract Compliance	Operating Range	Contract Compliance	Operating Range	Contract Compliance	Operating Range	Contract Compliance
2"	100	100	—	—	—	—	—	—
1-1/2"	88 - 100	85 - 100	100	100	—	—	—	—
1"	X ±18	X ±25	88 - 100	86 - 100	—	—	—	—
3/4"	0 - 17	0 - 20	X ±15	X ±22	100	100	—	—
1/2"	—	—	—	—	82 - 100	80 - 100	100	100
3/8"	0 - 7	0 - 9	X ±15	X ±22	X ±15	X ±22	X ±15	X ±20
No. 4	—	—	0 - 16	0 - 18	0 - 15	0 - 18	0 - 25	0 - 28
No. 8	—	—	0 - 6	0 - 7	0 - 6	0 - 7	0 - 6	0 - 7

In the above table, the symbol X is the gradation that the Contractor proposes to furnish for the specific sieve size as provided in Section 90-3.01, "General."

Coarse aggregate for the 1-1/2 inch, maximum, combined aggregate grading as provided in Section 90-3.04, "Combined Aggregate Gradings," shall be furnished in 2 or more primary aggregate nominal sizes. Each primary aggregate nominal size may be separated into 2 sizes and stored separately, provided that the combined material conforms to the grading requirements for that particular primary aggregate nominal size.

When the one inch, maximum, combined aggregate grading as provided in Section 90-3.04, "Combined Aggregate Gradings," is to be used, the coarse aggregate may be separated into 2 sizes and stored separately, provided that the combined material shall conform to the grading requirements for the 1" x No. 4 primary aggregate nominal size.

90-3.03 FINE AGGREGATE GRADING

Fine aggregate shall be graded within the following limits:

Sieve Sizes	Percentage Passing	
	Operating Range	Contract Compliance
3/8"	100	100
No. 4	95 - 100	93 - 100
No. 8	65 - 95	61 - 99
No. 16	X ±10	X ±13
No. 30	X ±9	X ±12
No. 50	X ±6	X ±9
No. 100	2 - 12	1 - 15
No. 200	0 - 8	0 - 10

In the above table, the symbol X is the gradation that the Contractor proposes to furnish for the specific sieve size as provided in Section 90-3.01, "General."

In addition to the above required grading analysis, the distribution of the fine aggregate sizes shall

be such that the difference between the total percentage passing the No. 16 sieve and the total percentage passing the No. 30 sieve shall be between 10 and 40, and the difference between the percentage passing the No. 30 and No. 50 sieves shall be between 10 and 40.

Fine aggregate may be separated into 2 or more sizes and stored separately, provided that the combined material conforms to the grading requirements specified in this Section 90-3.03.

90-3.04 COMBINED AGGREGATE GRADINGS

Combined aggregate grading limits shall be used only for the design of concrete mixes. Concrete mixes shall be designed so that aggregates are combined in proportions that shall produce a mixture within the grading limits for combined aggregates as specified herein.

The combined aggregate grading, except when otherwise specified in these specifications or the special provisions, shall be either the 1-1/2 inch, maximum grading, or the 1 inch, maximum grading, at the option of the Contractor.

Grading Limits of Combined Aggregates

Percentage Passing

Sieve Sizes	1-1/2" Max.	1" Max.	1/2" Max.	3/8" Max.
2"	100	—	—	—
1-1/2"	90 - 100	100	—	—
1"	50 - 86	90 - 100	—	—
3/4"	45 - 75	55 - 100	100	—
1/2"	—	—	90 - 100	100
3/8"	38 - 55	45 - 75	55 - 86	50 - 100
No. 4	30 - 45	35 - 60	45 - 63	45 - 63
No. 8	23 - 38	27 - 45	35 - 49	35 - 49
No. 16	17 - 33	20 - 35	25 - 37	25 - 37
No. 30	10 - 22	12 - 25	15 - 25	15 - 25
No. 50	4 - 10	5 - 15	5 - 15	5 - 15
No. 100	1 - 6	1 - 8	1 - 8	1 - 8
No. 200	0 - 3	0 - 4	0 - 4	0 - 4

Changes from one grading to another shall not be made during the progress of the work unless permitted by the Engineer.

90-4 ADMIXTURES

90-4.01 GENERAL

Admixtures used in portland cement concrete shall conform to and be used in conformance with the provisions in this Section 90-4 and the special provisions. Admixtures shall be used when specified or ordered by the Engineer and may be used at the Contractor's option as provided herein.

Chemical admixtures and air-entraining admixtures containing chlorides as Cl in excess of one percent by weight of admixture, as determined by California Test 415, shall not be used.

Admixtures shall be uniform in properties throughout their use in the work. Should it be found that an admixture as furnished is not uniform in properties, its use shall be discontinued.

If more than one admixture is used, the admixtures shall be compatible with each other so that the desirable effects of all admixtures used will be realized.

Chemical admixtures shall be used in conformance with the manufacturer's written recommendations. The manufacturer's written recommendations shall include a statement that the admixtures are compatible with the types and amounts of SCMs used.

90-4.02 MATERIALS

Admixture materials shall conform to the provisions in Section 90-2.04, "Admixture Materials."

90-4.03 ADMIXTURE APPROVAL

No admixture brand shall be used in the work unless it is on the Department's current list of approved brands for the type of admixture involved. Information regarding admixture qualification and placement on the Department's list can be obtained at the Transportation Laboratory.

If the Contractor proposes to use an admixture of a brand and type on the current list of approved admixture brands, the Contractor shall furnish a Certificate of Compliance from the manufacturer, as provided in Section 6-1.07, "Certificates of Compliance," certifying that the admixture furnished is the same as that previously approved. If a previously approved admixture is not accompanied by a Certificate of Compliance, the admixture shall not be used in the work until the Engineer has had sufficient time to make the appropriate tests and has approved the admixture for use. The Engineer may take samples for testing at any time, whether or not the admixture has been accompanied by a Certificate of Compliance.

90-4.04 REQUIRED USE OF CHEMICAL ADMIXTURES

If the use of a chemical admixture is specified, the admixture shall be used at the dosage specified, except that if no dosage is specified, the admixture shall be used at the dosage normally recommended by the manufacturer of the admixture.

90-4.05 OPTIONAL USE OF CHEMICAL ADMIXTURES

The Contractor may use Type A or F, water-reducing; Type B, retarding; or Type D or G, water-reducing and retarding admixtures as described in ASTM Designation: C 494 to conserve cementitious material or to facilitate any concrete construction application subject to the following conditions:

A. If a water-reducing admixture or a water-reducing and retarding admixture is used, the cementitious material content specified or ordered may be reduced by a maximum of 5 percent by weight, except that the resultant cementitious material content shall be not less than 505 pounds per cubic yard; and
B. When a reduction in cementitious material content is made, the dosage of admixture used shall be no less than the dosage used in determining approval of the admixture.

The Contractor may use Type S admixtures conforming to the requirements in ASTM Designation: C 494.

Unless otherwise specified, a Type C accelerating chemical admixture conforming to the requirements in ASTM Designation: C 494, may be used in portland cement concrete. Inclusion in the mix design submitted for approval will not be required provided that the admixture is added to counteract changing conditions that contribute to delayed setting of the portland cement concrete, and the use or change in dosage of the admixture is approved in writing by the Engineer.

90-4.06 REQUIRED USE OF AIR-ENTRAINING ADMIXTURES

When air-entrainment is specified or ordered by the Engineer, the air-entraining admixture shall be used in amounts to produce a concrete having the specified air content as determined by California Test 504.

90-4.07 OPTIONAL USE OF AIR-ENTRAINING ADMIXTURES

When air-entrainment has not been specified or ordered by the Engineer, the Contractor will be permitted to use an air-entraining admixture to facilitate the use of any construction procedure or equipment provided that the average air content, as determined by California Test 504, of 3 successive tests does not exceed 4 percent, and no single test value exceeds 5.5 percent. If the Contractor elects to use an air-entraining admixture in concrete for pavement, the Contractor shall so indicate at the time the Contractor designates the source of aggregate.

90-4.08 BLANK

90-4.09 BLANK

90-4.10 PROPORTIONING AND DISPENSING LIQUID ADMIXTURES

Chemical admixtures and air-entraining admixtures shall be dispensed in liquid form. Dispensers for liquid admixtures shall have sufficient capacity to measure at one time the prescribed quantity required for each batch of concrete. Each dispenser shall include a graduated measuring unit into which liquid admixtures are measured to within ±5 percent of the prescribed quantity for each batch. Dispensers shall be located and maintained so that the graduations can be accurately read from the point at which proportioning operations are controlled to permit a visual check of batching accuracy prior to discharge. Each measuring unit shall be clearly marked for the type and quantity of admixture.

Each liquid admixture dispensing system shall be equipped with a sampling device consisting of a valve located in a safe and readily accessible position such that a sample of the admixture may be withdrawn slowly by the Engineer.

If more than one liquid admixture is used in the concrete mix, each liquid admixture shall have a separate measuring unit and shall be dispensed by injecting equipment located in such a manner that the admixtures are not mixed at high concentrations and do not interfere with the effectiveness of each other. When air-entraining admixtures are used in conjunction with other liquid admixtures, the air-entraining admixture shall be the first to be incorporated into the mix, unless it is demonstrated that a different sequence improves performance.

When automatic proportioning devices are required for concrete pavement, dispensers for liquid admixtures shall operate automatically with the batching control equipment. The dispensers shall be equipped with an automatic warning system in good operating condition that will provide a visible or audible signal at the point at which proportioning operations are controlled when the quantity of admixture measured for each batch of concrete varies from the preselected dosage by more than 5 percent, or when the entire contents of the measuring unit are not emptied from the dispenser into each batch of concrete.

Unless liquid admixtures are added to premeasured water for the batch, their discharge into the batch shall be arranged to flow into the stream of water so that the admixtures are well dispersed throughout the batch, except that air-entraining admixtures may be dispensed directly into moist sand in the batching bins provided that adequate control of the air content of the concrete can be maintained.

Liquid admixtures requiring dosages greater than one-half gallon per cubic yard shall be considered to be water when determining the total amount of free water as specified in Section 90-6.06, "Amount of Water and Penetration."

90-4.11 BLANK

90-5 PROPORTIONING

90-5.01 STORAGE OF AGGREGATES

Aggregates shall be stored or stockpiled in such a manner that separation of coarse and fine particles of each size shall be avoided and the various sizes shall not become intermixed before proportioning.

Aggregates shall be stored or stockpiled and handled in a manner that prevent contamination by foreign materials. In addition, storage of aggregates at batching or mixing facilities that are erected subsequent to the award of the contract and that furnish concrete to the project shall conform to the following:

A. Intermingling of the different sizes of aggregates shall be positively prevented. The Contractor shall take the necessary measures to prevent intermingling. The preventive measures may include, but are not necessarily limited to, physical separation of stockpiles or construction of bulkheads of adequate length and height; and
B. Contamination of aggregates by contact with the ground shall be positively prevented. The Contractor shall take the necessary measures to prevent contamination. The preventive measures shall include, but are not necessarily limited to, placing aggregates on wooden platforms or on hardened surfaces consisting of portland cement concrete, asphalt concrete, or cement treated material.

In placing aggregates in storage or in moving the aggregates from storage to the weigh hopper of the batching plant, any method that may cause segregation, degradation, or the combining of materials of different gradings that will result in any size of aggregate at the weigh hopper failing to meet the grading requirements, shall be discontinued. Any method of handling aggregates that results in excessive breakage of particles shall be discontinued. The use of suitable devices to reduce impact of falling aggregates may be required by the Engineer.

90-5.02 PROPORTIONING DEVICES

Weighing, measuring, or metering devices used for proportioning materials shall conform to the requirements in Section 9-1.01, "Measurement of Quantities," and this Section 90-5.02. In addition, automatic weighing systems shall comply with the requirements for automatic proportioning devices in Section 90-5.03A, "Proportioning for Pavement." Automatic devices shall be automatic to the extent that the only manual operation required for proportioning the aggregates, cement, and SCM for one batch of concrete is a single operation of a switch or starter.

Proportioning devices shall be tested as frequently as the Engineer may deem necessary to ensure their accuracy.

Weighing equipment shall be insulated against vibration or movement of other operating equipment in the plant. When the plant is in operation, the weight of each batch of material shall not vary from the weight designated by the Engineer by more than the tolerances specified herein.

Equipment for cumulative weighing of aggregate shall have a zero tolerance of ±0.5 percent of the designated total batch weight of the aggregate. For systems with individual weigh hoppers for the various sizes of aggregate, the zero tolerance shall be ±0.5 percent of the individual batch weight designated for each size of aggregate. Equipment for cumulative weighing of cement and SCM shall have a zero tolerance of ±0.5 percent of the designated total batch weight of the cement and SCM. Equipment for weighing cement or SCM separately shall have a zero tolerance of ±0.5 percent of their designated individual batch weights. Equipment for measuring water shall have a zero tolerance of ±0.5 percent of its designated weight or volume.

The weight indicated for any batch of material shall not vary from the preselected scale setting by more than the following:

A. Aggregate weighed cumulatively shall be within 1.0 percent of the designated total batch weight of the aggregate. Aggregates weighed individually shall be within 1.5 percent of their respective designated batch weights; and
B. Cement shall be 99 to 102 percent of its designated batch weight. When weighed individually, SCM shall be 99 to 102 percent of its designated batch weight. When SCM and cement are permitted to be weighed cumulatively, cement shall be weighed first to 99 to 102 percent of its designated batch weight, and the total for cement and SCM shall be 99 to 102 percent of the sum of their designated batch weights When a blended cement is used, the percentages of cement and SCM used for calculating batch weights shall be based on the percentage of SCM indicated in the Certificate of Compliance from the blended cement supplier; and
C. Water shall be within 1.5 percent of its designated weight or volume.

Each scale graduation shall be approximately 0.001 of the total capacity of the scale. The capacity of scales for weighing cement, SCM, or cement plus SCM and aggregates shall not exceed that of commercially available scales having single graduations indicating a weight not exceeding the maximum permissible weight variation above, except that no scale shall be required having a capacity of less than 1,000 pounds, with one pound graduations.

90-5.03 PROPORTIONING

Proportioning shall consist of dividing the aggregates into the specified sizes, each stored in a separate bin, and combining them with cementitious material and water as provided in these specifications. Aggregates shall be proportioned by weight.

At the time of batching, aggregates shall have been dried or drained sufficiently to result in a stable moisture content such that no visible separation of water from aggregate will take place during transportation from the proportioning plant to the point of mixing. In no event shall the free moisture content of the fine aggregate at the time of batching exceed 8 percent of its saturated, surface-dry weight.

Should separate supplies of aggregate material of the same size group, but of different moisture content or specific gravity or surface characteristics affecting workability, be available at the proportioning plant, withdrawals shall be made from one supply exclusively and the materials therein completely exhausted before starting upon another.

Bulk Type IP (MS) or Type IS (MS) cement shall be weighed in an individual hopper and shall be kept separate from the aggregates until the ingredients are released for discharge into the mixer.

Bulk cement and SCM may be weighed in separate, individual weigh hoppers or may be weighed in the same weigh hopper and shall be kept separate from the aggregates until the ingredients are released for discharge into the mixer. If the cement and SCM are weighed cumulatively, the cement shall be weighed first.

If cement and SCM are weighed in separate weigh hoppers, the weigh systems for the proportioning of the aggregate, the cement, and the SCM shall be individual and distinct from all other weigh systems. Each weigh system shall be equipped with a hopper, a lever system, and an indicator to constitute an individual and independent material-weighing device. The cement and the SCM shall be discharged into the mixer simultaneously with the aggregate.

The scales and weigh hoppers for bulk weighing cement, SCM, or cement plus SCM shall be separate and distinct from the aggregate weighing equipment.

For batches of one cubic yard or more, the batching equipment shall conform to one of the following combinations:

A. Separate boxes and separate scale and indicator for weighing each size of aggregate.
B. Single box and scale indicator for all aggregates.

C. Single box or separate boxes and automatic weighing mechanism for all aggregates.

In order to check the accuracy of batch weights, the gross weight and tare weight of batch trucks, truck mixers, truck agitators, and non-agitating hauling equipment shall be determined when ordered by the Engineer. The equipment shall be weighed on scales designated by the Engineer.

90-5.03A Proportioning for Pavement

Aggregates and bulk SCM for use in pavement shall be proportioned by weight by means of automatic proportioning devices of approved type conforming to these specifications.

The Contractor shall install and maintain in operating condition an electronically actuated moisture meter that will indicate, on a readily visible scale, changes in the moisture content of the fine aggregate as it is batched within a sensitivity of 0.5 percent by weight of the fine aggregate.

The batching of cement, SCM, or cement plus SCM and aggregate shall be interlocked so that a new batch cannot be started until all weigh hoppers are empty, the proportioning devices are within zero tolerance, and the discharge gates are closed. The interlock shall permit no part of the batch to be discharged until all aggregate hoppers and the cement and SCM hoppers or the cement plus SCM hopper are charged with weights that are within the tolerances specified in Section 90-5.02, "Proportioning Devices."

If interlocks are required for cement and SCM charging mechanisms and cement and SCM are weighed cumulatively, their charging mechanisms shall be interlocked to prevent the introduction of SCM until the weight of cement in the cement weigh hopper is within the tolerances specified in Section 90-5.02, "Proportioning Devices."

If concrete is completely mixed in stationary paving mixers, the SCMs shall be weighed in a separate weigh hopper and the SCM and cement shall be introduced simultaneously into the mixer proportionately with the aggregate. If the Contractor provides certification that the stationary mixer is capable of mixing the cement, SCM, aggregates, and water uniformly before discharge, weighing the SCM cumulatively with the cement is permitted. Certification shall contain the following:

A. Test results for 2 compressive strength test cylinders of concrete taken within the first one-third and 2 compressive strength test cylinders of concrete taken within the last one-third of the concrete discharged from a single batch from the stationary paving mixer. Strength tests and cylinder preparation will be in conformance with the provisions of Section 90-9, "Compressive Strength";
B. Calculations demonstrating that the difference in the averages of 2 compressive strengths taken in the first one-third is no greater than 7.5 percent different than the averages of 2 compressive strengths taken in the last one-third of the concrete discharged from a single batch from the stationary paving mixer. Strength tests and cylinder preparation will be in conformance with the provisions of Section 90-9, "Compressive Strength;" and
C. The mixer rotation speed and time of mixing before discharge that are required to produce a mix that meets the requirements above.

The discharge gate on the cement and SCM hoppers or the cement plus SCM hopper shall be designed to permit regulating the flow of cement, SCM, or cement plus SCM into the aggregate as directed by the Engineer.

If separate weigh boxes are used for each size of aggregate, the discharge gates shall permit regulating the flow of each size of aggregate as directed by the Engineer.

Material discharged from the several bins shall be controlled by gates or by mechanical conveyors. The means of withdrawal from the several bins, and of discharge from the weigh box, shall be interlocked so that not more than one bin can discharge at a time, and so that the weigh box cannot be tripped until the required quantity from each of the several bins has been deposited therein.

Should a separate weigh box be used for each size of aggregate, all may be operated and discharged simultaneously.

If the discharge from the several bins is controlled by gates, each gate shall be actuated automatically so that the required mass is discharged into the weigh box, after which the gate shall automatically close and lock.

The automatic weighing system shall be designed so that all proportions required may be set on the weighing controller at the same time.

90-6 MIXING AND TRANSPORTING

90-6.01 GENERAL

Concrete shall be mixed in mechanically operated mixers, except that when permitted by the Engineer, batches not exceeding 1/3 cubic yard may be mixed by hand methods in conformance with the provisions in Section 90-6.05, "Hand-Mixing."

Equipment having components made of aluminum or magnesium alloys that would have contact with plastic concrete during mixing, transporting, or pumping of portland cement concrete shall not be used.

Concrete shall be homogeneous and thoroughly mixed, and there shall be no lumps or evidence of undispersed cementitious material.

Uniformity of concrete mixtures will be determined by differences in penetration as determined by California Test 533, or slump as determined by ASTM Designation: C 143, and by variations in the proportion of coarse aggregate as determined by California Test 529.

When the mix design specifies a penetration value, the difference in penetration, determined by comparing penetration tests on 2 samples of mixed concrete from the same batch or truck mixer load, shall not exceed 1/2 inch. When the mix design specifies a slump value, the difference in slump, determined by comparing slump tests on 2 samples of mixed concrete from the same batch or truck mixer load, shall not exceed the values given in the table below. Variation in the proportion of coarse aggregate will be determined by comparing the results of tests of 2 samples of mixed concrete from the same batch or truck mixer load and the difference between the 2 results shall not exceed 170 pounds per cubic yard of concrete.

Average Slump	Maximum Permissible Difference
Less than 4"	1"
4" to 6"	1-1/2"
Greater than 6" to 9"	2"

The Contractor shall furnish samples of the freshly mixed concrete and provide satisfactory facilities for obtaining the samples.

90-6.02 MACHINE MIXING

Concrete mixers may be of the revolving drum or the revolving blade type, and the mixing drum or blades shall be operated uniformly at the mixing speed recommended by the manufacturer. Mixers and agitators that have an accumulation of hard concrete or mortar shall not be used.

The temperature of mixed concrete, immediately before placing, shall be not less than 50 °F or more than 90 °F. Aggregates and water shall be heated or cooled as necessary to produce concrete within these temperature limits. Neither aggregates nor mixing water shall be heated to exceed 150 °F. If ice is used to cool the concrete, discharge of the mixer will not be permitted until all ice is melted.

The batch shall be so charged into the mixer that some water will enter in advance of cementitious materials and aggregates. All water shall be in the drum by the end of the first one-fourth of the specified mixing time. When concrete is delivered in a truck mixer, a portion of the mixing water may be withheld and may be added at the point of delivery as specified under Section 90-6.03, "Transporting Mixed Concrete."

Cementitious materials shall be batched and charged into the mixer by means that will not result either in loss of cementitious materials due to the effect of wind, in accumulation of cementitious materials on surfaces of conveyors or hoppers, or in other conditions that reduce or vary the required quantity of cementitious material in the concrete mixture.

Paving and stationary mixers shall be operated with an automatic timing device. The timing device and discharge mechanism shall be interlocked so that during normal operation no part of the batch will be discharged until the specified mixing time has elapsed.

The total elapsed time between the intermingling of damp aggregates and all cementitious materials and the start of mixing shall not exceed 30 minutes.

The size of batch shall not exceed the manufacturer's guaranteed capacity.

When producing concrete for pavement or base, suitable batch counters shall be installed and maintained in good operating condition at job site batching plants and stationary mixers. The batch counters shall indicate the exact number of batches proportioned and mixed.

Concrete shall be mixed and delivered to the job site by means of one of the following combinations of operations:

A. Mixed completely in a stationary mixer and the mixed concrete transported to the point of delivery in truck agitators or in nonagitating hauling equipment (central-mixed concrete).
B. Mixed partially in a stationary mixer, and the mixing completed in a truck mixer (shrink-mixed concrete).
C. Mixed completely in a truck mixer (transit-mixed concrete).
D. Mixed completely in a paving mixer.

Agitators may be truck mixers operating at agitating speed or truck agitators. Each mixer and agitator shall have attached thereto in a prominent place a metal plate or plates on which is plainly marked the various uses for which the equipment is designed, the manufacturer's guaranteed capacity of the drum or container in terms of the volume of mixed concrete and the speed of rotation of the mixing drum or blades.

Truck mixers shall be equipped with electrically or mechanically actuated revolution counters by which the number of revolutions of the drum or blades may readily be verified.

When shrink-mixed concrete is furnished, concrete that has been partially mixed at a central plant shall be transferred to a truck mixer and all requirements for transit-mixed concrete shall apply. No credit in the number of revolutions at mixing speed will be allowed for partial mixing in a central plant.

90-6.03 TRANSPORTING MIXED CONCRETE

Mixed concrete may be transported to the delivery point in truck agitators or truck mixers operating at the speed designated by the manufacturer of the equipment as agitating speed, or in non-agitating hauling equipment, provided the consistency and workability of the mixed concrete upon discharge at the delivery point is suitable for adequate placement and consolidation in place, and provided the mixed concrete after hauling to the delivery point conforms to the provisions in Section 90-6.01, "General."

Truck agitators shall be loaded not to exceed the manufacturer's guaranteed capacity and shall maintain the mixed concrete in a thoroughly mixed and uniform mass during hauling.

Bodies of nonagitating hauling equipment shall be constructed so that leakage of the concrete mix, or any part thereof, will not occur at any time.

Concrete hauled in open-top vehicles shall be protected during hauling against rain or against exposure to the sun for more than 20 minutes when the ambient temperature exceeds 75 °F.

No water in excess of that in the approved mix design shall be incorporated into the concrete. If approved by the Engineer, water withheld during batching may be added to the concrete at the delivery point in one operation before the discharge of more than 1/4 cubic yard. Equipment for supplying the water shall conform to Section 90-6.06, "Amount of Water and Penetration." When water is added at the point of delivery, the drum shall be revolved not less than 30 revolutions at mixing speed after the water is added and before discharged is commenced.

The rate of discharge of mixed concrete from truck mixer-agitators shall be controlled by the speed of rotation of the drum in the discharge direction with the discharge gate fully open.

If a truck mixer or agitator is used for transporting concrete to the delivery point, discharge shall be completed within 1.5 hours or before 250 revolutions of the drum or blades, whichever occurs first, after the introduction of the cement to the aggregates. Under conditions contributing to quick stiffening of the concrete, or if the temperature of the concrete is 85 °F or above, the time allowed may be less than 1.5 hours. If an admixture is used to retard the set time, the temperature of the concrete shall not exceed 85 °F, the time limit shall be 2 hours, and the revolution limitation shall be 300.

If nonagitating hauling equipment is used for transporting concrete to the delivery point, discharge shall be completed within one hour after the addition of the cement to the aggregates. Under conditions contributing to quick stiffening of the concrete, or when the temperature of the concrete is 85 °F or above, the time between the introduction of cement to the aggregates and discharge shall not exceed 45 minutes.

Each load of concrete delivered at the job site shall be accompanied by a weighmaster certificate showing the mix identification number, nonrepeating load number, date and time at which the materials were batched, the total amount of water added to the load, and for transit-mixed concrete, the reading of the revolution counter at the time the truck mixer is charged with cement. This weighmaster certificate shall also show the actual scale weights (pounds) for the ingredients batched. Theoretical or target batch weights shall not be used as a substitute for actual scale weights.

Weighmaster certificates shall be provided in printed form, or if approved by the Engineer, the data may be submitted in electronic media. Electronic media shall be presented in a tab-delimited format on a CD or DVD. Captured data, for the ingredients represented by each batch shall be "line feed, carriage return" (LFCR) and "one line, separate record" with allowances for sufficient fields to satisfy the amount of data required by these specifications.

The Contractor may furnish a weighmaster certificate accompanied by a separate certificate that lists the actual batch weights or measurements for a load of concrete provided that both certificates are imprinted with the same nonrepeating load number that is unique to the contract and delivered to the jobsite with the load.

Weighmaster certificates furnished by the Contractor shall conform to the provisions in Section 9-1.01, "Measurement of Quantities."

90-6.04 TIME OR AMOUNT OF MIXING

Mixing of concrete in paving or stationary mixers shall continue for the required mixing time after all ingredients, except water and admixture, if added with the water, are in the mixing compartment of the mixer before any part of the batch is released. Transfer time in multiple drum mixers shall not be counted as part of the required mixing time.

The required mixing time, in paving or stationary mixers, of concrete used for concrete structures, except minor structures, shall be not less than 90 seconds or more than 5 minutes, except that when directed by the Engineer in writing, the requirements of the following paragraph shall apply.

The required mixing time, in paving or stationary mixers, except as provided in the preceding paragraph, shall be not less than 50 seconds or more than 5 minutes.

The minimum required revolutions at the mixing speed for transit-mixed concrete shall not be less than that recommended by the mixer manufacturer, but in no case shall the number of revolutions be less than that required to consistently produce concrete conforming to the provisions for uniformity in Section 90-6.01, "General."

When a high range water-reducing admixture is added to the concrete at the job site, the total number of revolutions shall not exceed 300.

90-6.05 HAND-MIXING

Hand-mixed concrete shall be made in batches of not more than 1/3 cubic yard and shall be mixed on a watertight, level platform. The proper amount of coarse aggregate shall be measured in measuring boxes and spread on the platform and the fine aggregate shall be spread on this layer, the 2 layers being not more than one foot in total depth. On this mixture shall be spread the dry cementitious materials and the whole mass turned no fewer than 2 times dry; then sufficient clean water shall be added, evenly distributed, and the whole mass again turned no fewer than 3 times, not including placing in the carriers or forms.

90-6.06 AMOUNT OF WATER AND PENETRATION

The amount of water used in concrete mixes shall be regulated so that the penetration of the concrete as determined by California Test 533 or the slump of the concrete as determined by ASTM Designation: C 143 is within the nominal values shown in the following table. When the penetration or slump of the concrete is found to exceed the nominal values listed, the mixture of subsequent batches shall be adjusted to reduce the penetration or slump to a value within the nominal range shown. Batches of concrete with a penetration or slump exceeding the maximum values listed shall not be used in the work. If Type F or Type G chemical admixtures are added to the mix, the penetration requirements shall not apply and the slump shall not exceed 9 inches after the chemical admixtures are added.

Type of Work	Nominal		Maximum	
	Penetration (inches)	Slump (inches)	Penetration (inches)	Slump (inches)
Concrete Pavement	0 - 1	—	1-1/2	—
Non-reinforced concrete facilities	0 – 1-1/2	—	2	—
Reinforced concrete structures				
Sections over 12 inches thick	0 – 1-1/2	—	2-1/2	—
Sections 12 inches thick or less	0 - 2	—	3	—
Concrete placed under water	—	6 - 8	—	9
Cast-in-place concrete piles	2-1/2 – 3-1/2	5 - 7	4	8

The amount of free water used in concrete shall not exceed 310 pounds per cubic yard, plus 20 pounds for each required 100 pounds of cementitious material in excess of 550 pounds per cubic yard.

The term free water is defined as the total water in the mixture minus the water absorbed by the aggregates in reaching a saturated surface-dry condition.

If there are adverse or difficult conditions that affect the placing of concrete, the above specified penetration and free water content limitations may be exceeded providing the Contractor is granted permission by the Engineer in writing to increase the cementitious material content per cubic yard of concrete. The increase in water and cementitious material shall be at a ratio not to exceed 30 pounds of water per added 100 pounds of cementitious material per cubic yard. Full compensation for additional cementitious material and water added under these conditions shall be considered as

included in the contract price paid for the concrete work involved and no additional compensation will be allowed therefor.

The equipment for supplying water to the mixer shall be constructed and arranged so that the amount of water added can be measured accurately. Any method of discharging water into the mixer for a batch shall be accurate within 1.5 percent of the quantity of water required to be added to the mix for any position of the mixer. Tanks used to measure water shall be designed so that water cannot enter while water is being discharged into the mixer and discharge into the mixer shall be made rapidly in one operation without dribbling. All equipment shall be arranged so as to permit checking the amount of water delivered by discharging into measured containers.

90-7 CURING CONCRETE

90-7.01 METHODS OF CURING

Newly placed concrete shall be cured by the methods specified in this Section 90-7.01 and the special provisions.

90-7.01A Water Method

The concrete shall be kept continuously wet by the application of water for a minimum curing period of 7 days after the concrete has been placed.

Cotton mats, rugs, carpets, or earth or sand blankets may be used as a curing medium to retain the moisture during the curing period.

If a curing medium consisting of cotton mats, rugs, carpets, polyethylene sheeting, polyethylene sheeting on burlap, or earth or sand blankets is to be used to retain the moisture, the entire surface of the concrete shall be kept damp by applying water with a nozzle that so atomizes the flow that a mist and not a spray is formed, until the surface of the concrete is covered with the curing medium. The moisture from the nozzle shall not be applied under pressure directly upon the concrete and shall not be allowed to accumulate on the concrete in a quantity sufficient to cause a flow or wash the surface. At the expiration of the curing period, the concrete surfaces shall be cleared of all curing media.

At the option of the Contractor, a curing medium consisting of white opaque polyethylene sheeting extruded onto burlap may be used to cure concrete structures. The polyethylene sheeting shall have a minimum thickness of 4-mil, and shall be extruded onto 10-ounce burlap.

At the option of the Contractor, a curing medium consisting of polyethylene sheeting may be used to cure concrete columns. The polyethylene sheeting shall have a minimum thickness of 10-mil achieved in a single layer of material.

If the Contractor chooses to use polyethylene sheeting or polyethylene sheeting on burlap as a curing medium, these media and any joints therein shall be secured as necessary to provide moisture retention and shall be within 3 inches of the concrete at all points along the surface being cured. When these media are used, the temperature of the concrete shall be monitored during curing. If the temperature of the concrete cannot be maintained below 140° F, use of these curing media shall be disallowed.

When concrete bridge decks and flat slabs are to be cured without the use of a curing medium, the entire surface of the bridge deck or slab shall be kept damp by the application of water with an atomizing nozzle as specified above, until the concrete has set, after which the entire surface of the concrete shall be sprinkled continuously with water for a period of not less than 7 days.

90-7.01B Curing Compound Method

Surfaces of the concrete that are exposed to the air shall be sprayed uniformly with a curing compound.

Curing compounds to be used shall be as follows:

1. Pigmented curing compound conforming to the requirements in ASTM Designation: C 309, Type 2, Class B, except the resin type shall be poly-alpha-methylstyrene.
2. Pigmented curing compound conforming to the requirements in ASTM Designation: C 309, Type 2, Class B.
3. Pigmented curing compound conforming to the requirements in ASTM Designation: C 309, Type 2, Class A.
4. Nonpigmented curing compound conforming to the requirements in ASTM Designation: C 309, Type 1, Class B.
5. Nonpigmented curing compound conforming to the requirements in ASTM Designation: C 309, Type 1, Class A.
6. Nonpigmented curing compound with fugitive dye conforming to the requirements in ASTM Designation: C 309, Type 1-D, Class A.

The infrared scan for the dried vehicle from curing compound (1) shall match the infrared scan on file at the Transportation Laboratory.

The loss of water for each type of curing compound, when tested in conformance with the requirements in California Test 534, shall not be more than 0.28 pounds per square yard in 24 hours.

The curing compound to be used will be specified elsewhere in these specifications or in the special provisions.

If the use of curing compound is required or permitted elsewhere in these specifications or in the special provisions and no specific kind is specified, any of the curing compounds listed above may be used.

Curing compound shall be applied at a nominal rate of one gallon per 150 square feet, unless otherwise specified.

At any point, the application rate shall be within ±50 square feet per gallon of the nominal rate specified, and the average application rate shall be within ±25 square feet per gallon of the nominal rate specified when tested in conformance with the requirements in California Test 535. Runs, sags, thin areas, skips, or holidays in the applied curing compound shall be evidence that the application is not satisfactory.

Curing compounds shall be applied using power operated spray equipment. The power operated spraying equipment shall be equipped with an operational pressure gage and a means of controlling the pressure. Hand spraying of small and irregular areas that are not reasonably accessible to mechanical spraying equipment, in the opinion of the Engineer, may be permitted.

The curing compound shall be applied to the concrete following the surface finishing operation, immediately before the moisture sheen disappears from the surface, but before any drying shrinkage or craze cracks begin to appear. In the event of any drying or cracking of the surface, application of water with an atomizing nozzle as specified in Section 90-7.01A, "Water Method," shall be started immediately and shall be continued until application of the compound is resumed or started; however, the compound shall not be applied over any resulting freestanding water. Should the film of compound be damaged from any cause before the expiration of 7 days after the concrete is placed in the case of structures and 72 hours in the case of pavement, the damaged portion shall be repaired immediately with additional compound.

At the time of use, compounds containing pigments shall be in a thoroughly mixed condition with the pigment uniformly dispersed throughout the vehicle. A paddle shall be used to loosen all settled pigment from the bottom of the container, and a power driven agitator shall be used to disperse the pigment uniformly throughout the vehicle.

Agitation shall not introduce air or other foreign substance into the curing compound.

The manufacturer shall include in the curing compound the necessary additives for control of sagging, pigment settling, leveling, de-emulsification, or other requisite qualities of a satisfactory working material. Pigmented curing compounds shall be manufactured so that the pigment does not settle badly, does not cake or thicken in the container, and does not become granular or curdled. Settlement of pigment shall be a thoroughly wetted, soft, mushy mass permitting the complete and easy vertical penetration of a paddle. Settled pigment shall be easily redispersed, with minimum resistance to the sideways manual motion of the paddle across the bottom of the container, to form a smooth uniform product of the proper consistency.

Curing compounds shall remain sprayable at temperatures above 40 °F and shall not be diluted or altered after manufacture.

The curing compound shall be packaged in clean 274-gallon totes, 55-gallon barrels or 5-gallon pails shall be supplied from a suitable storage tank located at the jobsite. The containers shall comply with "Title 49, Code of Federal Regulations, Hazardous Materials Regulations." The 274-gallon totes and the 55-gallon barrels shall have removable lids and airtight fasteners. The 5-gallon pails shall be round and have standard full open head and bail. Lids with bungholes will not be permitted. Settling or separation of solids in containers, except tanks, must be completely redispersed with low speed mixing prior to use, in conformance with these specifications and the manufacturer's recommendations. Mixing shall be accomplished either manually by use of a paddle or by use of a mixing blade driven by a drill motor, at low speed. Mixing blades shall be the type used for mixing paint. On-site storage tanks shall be kept clean and free of contaminants. Each tank shall have a permanent system designed to completely redisperse settled material without introducing air or other foreign substances.

Steel containers and lids shall be lined with a coating that will prevent destructive action by the compound or chemical agents in the air space above the compound. The coating shall not come off the container or lid as skins. Containers shall be filled in a manner that will prevent skinning. Plastic containers shall not react with the compound.

Each container shall be labeled with the manufacturer's name, kind of curing compound, batch number, volume, date of manufacture, and volatile organic compound (VOC) content. The label shall also warn that the curing compound containing pigment shall be well stirred before use. Precautions concerning the handling and the application of curing compound shall be shown on the label of the curing compound containers in conformance with the Construction Safety Orders and General Industry Safety Orders of the State.

Containers of curing compound shall be labeled to indicate that the contents fully comply with the rules and regulations concerning air pollution control in the State.

When the curing compound is shipped in tanks or tank trucks, a shipping invoice shall accompany each load. The invoice shall contain the same information as that required herein for container labels.

Curing compound will be sampled by the Engineer at the source of supply, at the job site, or at both locations.

Curing compound shall be formulated so as to maintain the specified properties for a minimum of one year. The Engineer may require additional testing before use to determine compliance with these specifications if the compound has not been used within one year or whenever the Engineer has reason to believe the compound is no longer satisfactory.

Tests will be conducted in conformance with the latest ASTM test methods and methods in use by the Transportation Laboratory.

90-7.01C Waterproof Membrane Method

The exposed finished surfaces of concrete shall be sprayed with water, using a nozzle that so atomizes the flow that a mist and not a spray is formed, until the concrete has set, after which the curing membrane, shall be placed. The curing membrane shall remain in place for a period of not less than 72 hours.

Sheeting material for curing concrete shall conform to the requirements in AASHTO Designation: M 171 for white reflective materials.

The sheeting material shall be fabricated into sheets of such width as to provide a complete cover for the entire concrete surface. Joints in the sheets shall be securely cemented together in such a manner as to provide a waterproof joint. The joint seams shall have a minimum lap of 0.33 foot.

The sheets shall be securely weighted down by placing a bank of earth on the edges of the sheets or by other means satisfactory to the Engineer.

Should any portion of the sheets be broken or damaged before the expiration of 72 hours after being placed, the broken or damaged portions shall be immediately repaired with new sheets properly cemented into place.

Sections of membrane that have lost their waterproof qualities or have been damaged to such an extent as to render them unfit for curing the concrete shall not be used.

90-7.01D Forms-In-Place Method

Formed surfaces of concrete may be cured by retaining the forms in place. The forms shall remain in place for a minimum period of 7 days after the concrete has been placed, except that for members over 20 inches in least dimension the forms shall remain in place for a minimum period of 5 days.

Joints in the forms and the joints between the end of forms and concrete shall be kept moisture tight during the curing period. Cracks in the forms and cracks between the forms and the concrete shall be resealed by methods subject to the approval of the Engineer.

90-7.02 BLANK

90-7.03 CURING STRUCTURES

Newly placed concrete for cast-in-place structures, other than highway bridge decks, shall be cured by the water method, the forms-in-place method, or, as permitted herein, by the curing compound method, in conformance with the provisions in Section 90-7.01, "Methods of Curing."

The curing compound method using a pigmented curing compound may be used on concrete surfaces of construction joints, surfaces that are to be buried underground, and surfaces where only ordinary surface finish is to be applied and on which a uniform color is not required and that will not be visible from a public traveled way. If the Contractor elects to use the curing compound method on the bottom slab of box girder spans, the curing compound shall be curing compound (1).

The top surface of highway bridge decks shall be cured by both the curing compound method and the water method. The curing compound shall be curing compound (1).

Concrete surfaces of minor structures, as defined in Section 51-1.02, "Minor Structures," shall be cured by the water method, the forms-in-place method or the curing compound method.

When deemed necessary by the Engineer during periods of hot weather, water shall be applied to concrete surfaces being cured by the curing compound method or by the forms-in-place method, until the Engineer determines that a cooling effect is no longer required. Application of water for this purpose will be paid for as extra work as provided in Section 4-1.03D, "Extra Work."

90-7.04 CURING PRECAST CONCRETE MEMBERS

Precast concrete members shall be cured in conformance with any of the methods specified in Section 90-7.01, "Methods of Curing." Curing shall be provided for the minimum time specified for

each method or until the concrete reaches its design strength, whichever is less. Steam curing may also be used for precast members and shall conform to the following provisions:

A. After placement of the concrete, members shall be held for a minimum 4-hour presteaming period. If the ambient air temperature is below 50 °F, steam shall be applied during the presteaming period to hold the air surrounding the member at a temperature between 50 °F and 90 °F.

B. To prevent moisture loss on exposed surfaces during the presteaming period, members shall be covered as soon as possible after casting or the exposed surfaces shall be kept wet by fog spray or wet blankets.

C. Enclosures for steam curing shall allow free circulation of steam about the member and shall be constructed to contain the live steam with a minimum moisture loss. The use of tarpaulins or similar flexible covers will be permitted, provided they are kept in good repair and secured in such a manner as to prevent the loss of steam and moisture.

D. Steam at the jets shall be at low pressure and in a saturated condition. Steam jets shall not impinge directly on the concrete, test cylinders, or forms. During application of the steam, the temperature rise within the enclosure shall not exceed 40 °F per hour. The curing temperature throughout the enclosure shall not exceed 150 °F and shall be maintained at a constant level for a sufficient time necessary to develop the required transfer strength. Control cylinders shall be covered to prevent moisture loss and shall be placed in a location where temperature is representative of the average temperature of the enclosure.

E. Temperature recording devices that will provide an accurate, continuous, permanent record of the curing temperature shall be provided. A minimum of one temperature recording device per 200 feet of continuous bed length will be required for checking temperature.

F. Members in pretension beds shall be detensioned immediately after the termination of steam curing while the concrete and forms are still warm, or the temperature under the enclosure shall be maintained above 60 °F until the stress is transferred to the concrete.

G. Curing of precast concrete will be considered completed after termination of the steam curing cycle.

90-7.05 CURING PRECAST PRESTRESSED CONCRETE PILES

Newly placed concrete for precast prestressed concrete piles shall be cured in conformance with the provisions in Section 90-7.04, "Curing Precast Concrete Members," except that piles in a corrosive environment shall be cured as follows:

A. Piles shall be either steam cured or water cured. If water curing is used, the piles shall be kept continuously wet by the application of water in conformance with the provisions in Section 90-7.01A, "Water Method."

B. If steam curing is used, the steam curing provisions in Section 90-7.04, "Curing Precast Concrete Members," shall apply except that the piles shall be kept continuously wet for their entire length for a period of not less than 3 days, including the holding and steam curing periods.

90-7.06 CURING SLOPE PROTECTION

Concrete slope protection shall be cured in conformance with any of the methods specified in Section 90-7.01, "Methods of Curing."

Concreted-rock slope protection shall be cured in conformance with any of the methods specified in Section 90-7.01, "Methods of Curing," with a blanket of earth kept wet for 72 hours, or by sprinkling with a fine spray of water every 2 hours during the daytime for a period of 3 days.

90-7.07 CURING MISCELLANEOUS CONCRETE WORK

Exposed surfaces of curbs shall be cured by pigmented curing compounds as specified in Section 90-7.01B, "Curing Compound Method."

Concrete sidewalks, gutter depressions, island paving, curb ramps, driveways, and other miscellaneous concrete areas shall be cured in conformance with any of the methods specified in Section 90-7.01, "Methods of Curing."

Shotcrete shall be cured for at least 72 hours by spraying with water, by a moist earth blanket, or by any of the methods provided in Section 90-7.01, "Methods of Curing."

Mortar and grout shall be cured by keeping the surface damp for 3 days.

After placing, the exposed surfaces of sign structure foundations, including pedestal portions, if constructed, shall be cured for at least 72 hours by spraying with water, by a moist earth blanket, or by any of the methods provided in Section 90-7.01, "Methods of Curing."

90-8 PROTECTING CONCRETE

90-8.01 GENERAL

In addition to the provisions in Section 7-1.16, "Contractor's Responsibility for the Work and Materials," the Contractor shall protect concrete as provided in this Section 90-8. If required by the Engineer, the Contractor shall submit a written outline of the proposed methods for protecting the concrete.

The Contractor shall protect concrete from damage from any cause, which shall include, but not be limited to: rain, heat, cold, wind, Contractor's actions, and actions of others.

Concrete shall not be placed on frozen or ice-coated ground or subgrade nor on ice-coated forms, reinforcing steel, structural steel, conduits, precast members, or construction joints.

Under rainy conditions, placing of concrete shall be stopped before the quantity of surface water is sufficient to damage surface mortar or cause a flow or wash of the concrete surface, unless the Contractor provides adequate protection against damage.

Concrete that has been frozen or damaged by other causes, as determined by the Engineer, shall be removed and replaced by the Contractor at the Contractor's expense.

90-8.02 PROTECTING CONCRETE STRUCTURES

Structure concrete and shotcrete used as structure concrete shall be maintained at a temperature of not less than 45 °F for 72 hours after placing and at not less than 40 °F for an additional 4 days.

90-9 COMPRESSIVE STRENGTH

90-9.01 GENERAL

Concrete compressive strength requirements consist of a minimum strength that shall be attained before various loads or stresses are applied to the concrete and, for concrete designated by compressive strength, a minimum strength at the age of 28 days or at the age otherwise allowed in Section 90-1.01, "Description." The various strengths required are specified in these specifications or the special provisions or are shown on the plans.

The compressive strength of concrete will be determined from test cylinders that have been fabricated from concrete sampled in conformance with the requirements of California Test 539. Test cylinders will be molded and initially field cured in conformance with California Test 540. Test cylinders will be cured and tested after receipt at the testing laboratory in conformance with the requirements of California Test 521. A strength test shall consist of the average strength of 2 cylinders fabricated from material taken from a single load of concrete, except that, if any cylinder should show evidence of improper sampling, molding, or testing, that cylinder shall be discarded and the strength test shall consist of the strength of the remaining cylinder.

When concrete compressive strength is specified as a prerequisite to applying loads or stresses to

a concrete structure or member, test cylinders for other than steam cured concrete will be cured in conformance with Method 1 of California Test 540. The compressive strength of concrete determined for these purposes will be evaluated on the basis of individual tests.

When concrete is designated by compressive strength rather than by cementitious material content, the concrete strength to be used as a basis for acceptance of other than steam cured concrete will be determined from cylinders cured in conformance with Method 1 of California Test 540. If the result of a single compressive strength test at the maximum age specified or allowed is below the specified strength but is 95 percent or more of the specified strength, the Contractor shall make corrective changes, subject to approval of the Engineer, in the mix proportions or in the concrete fabrication procedures, before placing additional concrete, and shall pay to the State $10 for each in-place cubic yard of concrete represented by the deficient test. If the result of a single compressive strength test at the maximum age specified or allowed is below 95 percent of the specified strength, but is 85 percent or more of the specified strength, the Contractor shall make the corrective changes specified above, and shall pay to the State $15 for each in-place cubic yard of concrete represented by the deficient test. In addition, such corrective changes shall be made when the compressive strength of concrete tested at 7 days indicates, in the judgment of the Engineer, that the concrete will not attain the required compressive strength at the maximum age specified or allowed. Concrete represented by a single test that indicates a compressive strength of less than 85 percent of the specified 28-day compressive strength will be rejected in conformance with the provisions in Section 6-1.04, "Defective Materials."

If the test result indicates that the compressive strength at the maximum age specified or allowed is below the specified strength, but is 85 percent or more of the specified strength, payments to the State as required above shall be made, unless the Contractor, at the Contractor's expense, obtains and submits evidence acceptable to the Engineer that the strength of the concrete placed in the work meets or exceeds the specified 28-day compressive strength. If the test result indicates a compressive strength at the maximum age specified or allowed below 85 percent, the concrete represented by that test will be rejected, unless the Contractor, at the Contractor's expense, obtains and submits evidence acceptable to the Engineer that the strength and quality of the concrete placed in the work are acceptable. If the evidence consists of tests made on cores taken from the work, the cores shall be obtained and tested in conformance with the requirements in ASTM Designation: C 42.

No single compressive strength test shall represent more than 320 cubic yards.

If a precast concrete member is steam cured, the compressive strength of the concrete will be determined from test cylinders that have been handled and stored in conformance with Method 3 of California Test 540. The compressive strength of steam cured concrete will be evaluated on the basis of individual tests representing specific portions of production. If the concrete is designated by 28-day compressive strength rather than by cementitious material content, the concrete shall be considered to be acceptable whenever its compressive strength reaches the specified 28-day compressive strength provided that strength is reached in not more than the maximum number of days specified or allowed after the member is cast.

When concrete has a specified 28-day compressive strength greater than 3,600 pounds per square inch, prequalification of materials, mix proportions, mixing equipment, and procedures proposed for use will be required prior to placement of the concrete. Prequalification shall be accomplished by the submission of acceptable certified test data or trial batch reports by the Contractor. Prequalification data shall be based on the use of materials, mix proportions, mixing equipment, procedures, and size of batch proposed for use in the work.

Certified test data, in order to be acceptable, shall indicate that not less than 90 percent of at least 20 consecutive tests exceed the specified strength at the maximum number of days specified or allowed, and none of those tests are less than 95 percent of specified strength. Strength tests included in the data shall be the most recent tests made on concrete of the proposed mix design and all shall have been made within one year of the proposed use of the concrete.

Trial batch test reports, in order to be acceptable, shall indicate that the average compressive

strength of 5 consecutive concrete cylinders, taken from a single batch, at not more than 28 days (or the maximum age allowed) after molding shall be at least 580 pounds per square inch greater than the specified 28-day compressive strength, and no individual cylinder shall have a strength less than the specified strength at the maximum age specified or allowed. Data contained in the report shall be from trial batches that were produced within one year of the proposed use of specified strength concrete in the project. Whenever air-entrainment is required, the air content of trial batches shall be equal to or greater than the air content specified for the concrete without reduction due to tolerances.

Tests shall be performed in conformance with either the appropriate California Test methods or the comparable ASTM test methods. Equipment employed in testing shall be in good condition and shall be properly calibrated. If the tests are performed during the life of the contract, the Engineer shall be notified sufficiently in advance of performing the tests in order to witness the test procedures.

The certified test data and trial batch test reports shall include the following information:

A. Date of mixing.
B. Mixing equipment and procedures used.
C. The size of batch in cubic yards and the weight, type, and source of all ingredients used.
D. Penetration or slump (if the concrete will be placed under water or placed in cast-in-place concrete piles) of the concrete.
E. The air content of the concrete if an air-entraining admixture is used.
F. The age at time of testing and strength of all concrete cylinders tested.

Certified test data and trial batch test reports shall be signed by an official of the firm that performed the tests.

When approved by the Engineer, concrete from trial batches may be used in the work at locations where concrete of a lower quality is required and the concrete will be paid for as the type of concrete required at that location.

After materials, mix proportions, mixing equipment, and procedures for concrete have been prequalified for use, additional prequalification by testing of trial batches will be required prior to making changes that, in the judgment of the Engineer, could result in a strength of concrete below that specified.

The Contractor's attention is directed to the time required to test trial batches and the Contractor shall be responsible for production of trial batches at a sufficiently early date so that the progress of the work is not delayed.

When precast concrete members are manufactured at the plant of an established manufacturer of precast concrete members, the mix proportions of the concrete shall be determined by the Contractor, and a trial batch and prequalification of the materials, mix proportions, mixing equipment, and procedures will not be required.

90-10 MINOR CONCRETE

90-10.01 GENERAL

Concrete for minor structures, slope paving, curbs, sidewalks and other concrete work, when designated as minor concrete on the plans, in the specifications, or in the contract item, shall conform to the provisions specified herein.

The Engineer, at the Engineer's discretion, will inspect and test the facilities, materials and methods for producing the concrete to ensure that minor concrete of the quality suitable for use in the work is obtained.

Before using minor concrete or in advance of revising the mix proportions, the Contractor shall submit in writing to the Engineer a copy of the mix design. When required by the following table, the Contractor shall include compressive strength test results verifying the minimum specified compressive strength:

SCM	Test Submittal Required
Fly Ash used alone	When portland cement content<350 lbs/cy
GGBFS used alone	When portland cement content <250 lbs/cy
Natural Pozzolan used alone	When portland cement content <350 lbs/cy
More than 1 SCM	Always

Tests shall be performed by an ACI certified technician.

90-10.02 MATERIALS

Minor concrete shall conform to the following requirements:

90-10.02A Cementitious Material

Cementitious material shall conform to the provisions in Section 90-1.01, "Description," and 90-2, "Materials."

90-10.02B Aggregate

Aggregate shall be clean and free from deleterious coatings, clay balls, roots, and other extraneous materials.

Use of crushed concrete or reclaimed aggregate is acceptable only if the aggregate satisfies all aggregate requirements.

The Contractor shall submit to the Engineer for approval, a grading of the combined aggregate proposed for use in the minor concrete. After acceptance of the grading, aggregate furnished for minor concrete shall conform to that grading, unless a change is authorized in writing by the Engineer.

The Engineer may require the Contractor to furnish periodic test reports of the aggregate grading furnished. The maximum size of aggregate used shall be at the option of the Contractor, but in no case shall the maximum size be larger than 1-1/2-inch or smaller than 3/4 inch.

The Engineer may waive, in writing, the gradation requirements in this Section 90-10.02B, if, in the Engineer's opinion, the furnishing of the gradation is not necessary for the type or amount of concrete work to be constructed.

90-10.02C Water

Water used for washing, mixing, and curing shall be free from oil, salts, and other impurities that would discolor or etch the surface or have an adverse affect on the quality of the concrete.

90-10.02D Admixtures

The use of admixtures shall conform to the provisions in Section 90-4, "Admixtures."

90-10.03 PRODUCTION

Cementitious material, water, aggregate, and admixtures shall be stored, proportioned, mixed, transported, and discharged in conformance with recognized standards of good practice that will

result in concrete that is thoroughly and uniformly mixed, that is suitable for the use intended, and that conforms to requirements specified herein. Recognized standards of good practice are outlined in various industry publications such as are issued by American Concrete Institute, AASHTO, or the Department.

The cementitious material content of minor concrete shall conform to the provisions in Section 90-1.01, "Description."

The amount of water used shall result in a consistency of concrete conforming to the provisions in Section 90-6.06, "Amount of Water and Penetration." Additional mixing water shall not be incorporated into the concrete during hauling or after arrival at the delivery point, unless authorized by the Engineer.

Discharge of ready-mixed concrete from the transporting vehicle shall be made while the concrete is still plastic and before stiffening occurs. An elapsed time of 1.5 hours (one hour in non-agitating hauling equipment), or more than 250 revolutions of the drum or blades, after the introduction of the cementitious material to the aggregates, or a temperature of concrete of more than 90 °F will be considered conditions contributing to the quick stiffening of concrete. The Contractor shall take whatever action is necessary to eliminate quick stiffening, except that the addition of water will not be permitted.

The required mixing time in stationary mixers shall be not less than 50 seconds or more than 5 minutes.

The minimum required revolutions at mixing speed for transit-mixed concrete shall be not less than that recommended by the mixer manufacturer, and shall be increased, if necessary, to produce thoroughly and uniformly mixed concrete.

When a high range water-reducing admixture is added to the concrete at the job site, the total number of revolutions shall not exceed 300.

Each load of ready-mixed concrete shall be accompanied by a weighmaster certificate that shall be delivered to the Engineer at the discharge location of the concrete, unless otherwise directed by the Engineer. The weighmaster certificate shall be clearly marked with the date and time of day when the load left the batching plant and, if hauled in truck mixers or agitators, the time the mixing cycle started.

A Certificate of Compliance conforming to the provisions in Section 6-1.07, "Certificates of Compliance," shall be furnished to the Engineer, prior to placing minor concrete from a source not previously used on the contract, stating that minor concrete to be furnished meets contract requirements, including minimum cementitious material content specified.

90-10.04 CURING MINOR CONCRETE

Curing minor concrete shall conform to the provisions in Section 90-7, "Curing Concrete."

90-10.05 PROTECTING MINOR CONCRETE

Protecting minor concrete shall conform to the provisions in Section 90-8, "Protecting Concrete," except the concrete shall be maintained at a temperature of not less than 40 °F for 72 hours after placing.

90-10.06 MEASUREMENT AND PAYMENT

Minor concrete will be measured and paid for in conformance with the provisions specified in the various sections of these specifications covering concrete construction when minor concrete is specified in the specifications, shown on the plans, or indicated by contract item in the Engineer's Estimate.

90-11 MEASUREMENT AND PAYMENT

90-11.01 MEASUREMENT

Portland cement concrete will be measured in conformance with the provisions specified in the various sections of these specifications covering construction requiring concrete.

For concrete measured at the mixer, the volume in cubic feet shall be computed as the total weight of the batch in pounds divided by the density of the concrete in pounds per cubic foot. The total weight of the batch shall be calculated as the sum of all materials, including water, entering the batch. The density of the concrete will be determined in conformance with the requirements in California Test 518.

90-11.02 PAYMENT

Portland cement concrete will be paid for in conformance with the provisions specified in the various sections of these specifications covering construction requiring concrete.

Full compensation for furnishing and incorporating admixtures required by these specifications or the special provisions will be considered as included in the contract prices paid for the concrete involved and no additional compensation will be allowed therefor.

Should the Engineer order the Contractor to incorporate any admixtures in the concrete when their use is not required by these specifications or the special provisions, furnishing the admixtures and adding them to the concrete will be paid for as extra work as provided in Section 4-1.03D, "Extra Work."

Should the Contractor use admixtures in conformance with the provisions in Section 90-4.05, "Optional Use of Chemical Admixtures," or Section 90-4.07, "Optional Use of Air-entraining Admixtures," or should the Contractor request and obtain permission to use other admixtures for the Contractor's benefit, the Contractor shall furnish those admixtures and incorporate them into the concrete at the Contractor's expense and no additional compensation will be allowed therefor.

SECTION 91 PAINT
(Issued 05-1-06)

Replace Section 91-3 with:

91-3 PAINTS FOR TIMBER

91-3.01 WOOD PRIMER, LATEX-BASE

Classification:

This specification covers a ready-mixed priming paint for use on unpainted wood or exterior woodwork. It shall conform with the requirements in the Detailed Performance Standards of the Master Painters Institute (MPI) for exterior wood primers, and be listed on the Exterior Latex Wood Primer MPI List Number 6.

91-3.02 PAINT; LATEX-BASE FOR EXTERIOR WOOD, WHITE AND TINTS

Classification:

This specification covers a ready-mixed paint for use on wood surfaces subject to outside exposures. This paint shall conform to the requirements in the Detailed Performance Standards of the Master Painters Institute (MPI) for Paint, Latex, Exterior, and shall be listed on the following MPI Approved Products List:

A. Exterior Latex, Flat MPI Gloss Level 1, MPI List Number 10.
B. Exterior Latex, Semi-Gloss, MPI Gloss Level 5, MPI List Number 11.
C. Exterior Latex, Gloss, MPI Gloss Level 6, MPI List Number 119.

Unpainted wood shall first be primed with wood primer conforming to the provisions in Section 91-3.01, "Wood Primer, Latex-Base."

REPLACE Section 91-4 with:

91-4 MISCELLANEOUS PAINTS

91-4.01 THROUGH 91-4.04 (BLANK)

91-4.05 PAINT; ACRYLIC EMULSION, EXTERIOR WHITE AND LIGHT AND MEDIUM TINTS

Classification:

This specification covers an acrylic emulsion paint designed for use on exterior masonry. This paint shall conform to the requirements in the Detailed Performance Standards of the Master Painters Institute (MPI) for Paint, Latex, Exterior, and shall be listed on the following MPI Approved Products Lists:

A. Exterior Latex, Flat MPI Gloss Level 1, MPI List Number 10.
B. Exterior Latex, Semi-Gloss, MPI Gloss Level 5, MPI List Number 11.
C. Exterior Latex, Gloss, MPI Gloss Level 6, MPI List Number 119.

This paint may be tinted by using "universal" or "all purpose" concentrates.

APPENDIX A

NEPA / Exemption

NOTICE OF EXEMPTION

(Check one or both)

TO: X RECORDER/COUNTY CLERK
P.O. BOX 1750, MS A-33
1600 PACIFIC HWY, ROOM 260
SAN DIEGO, CA 92101-2422

_____ OFFICE OF PLANNING AND RESEARCH
1400 TENTH STREET, ROOM 121
SACRAMENTO, CA 95814

FROM: CITY OF SAN DIEGO
DEVELOPMENT SERVICES DEPARTMENT
1222 FIRST AVENUE, MS 501
SAN DIEGO, CA 92101

PROJECT NO.: **WBS # S-00941** PROJECT TITLE: **Ted Williams Parkway Pedestrian Overcrossing at Shoal Creek Drive and Non-Vehicular Easement.**

PROJECT LOCATION-SPECIFIC: Ted Williams Parkway and Shoal Creek Dr.
PROJECT LOCATION-CITY/COUNTY: San Diego/San Diego.

DESCRIPTION OF NATURE, PURPOSE, AND BENEFICIARIES OF PROJECT: City Council approval to award a contract and construct the project which involves the construction of an approximate 139-foot-long main span consisting of two precast concrete bulbtee girders across Ted Williams Parkway. The bridge would provide an alternate crossing for school children to cross Ted Williams Parkway from Shoal Creek Dr. Cast-in-place concrete approach ramps will be utilized to transport pedestrians and bicyclists back down to grade. These ramps would be compliant with the maximum allowed ADA slope. The curb and gutter on the north side of the project will be extended out approximately 15 feet from the current location in order to facilitate construction of bridge and replacement of a standard sidewalk adjacent to the bridge. The project is located within the public right of way and onto adjacent Homeowners Association land. A non-vehicular easement would be acquired for public use of the bridge and pedestrian ramp. The project will also provide a wall and trees on private property at 14019 Stoney Gate Place and realign utilities such as a water main and dry utilities to avoid conflict with the proposed improvements.

NAME OF PUBLIC AGENCY APPROVING PROJECT: City of San Diego
NAME OF PERSON OR AGENCY CARRYING OUT PROJECT: City of San Diego, E&CP Dept/Mark Koll, 600 B Street, Suite 800 (MS 908A), San Diego, CA 92101. (619) 533-4653

EXEMPT STATUS: (CHECK ONE)

( ) MINISTERIAL (SEC. 21080(b)(1); 15268);
( ) DECLARED EMERGENCY (SEC. 21080(b)(3); 15269(a));
( ) EMERGENCY PROJECT (SEC. 21080(b)(4); 15269 (b)(c))
(X) CATEGORICAL EXEMPTION: **15301 (C) – EXISTING FACILITIES/15303 -NEW CONSTRUCTION OR CONVERSION OF SMALL STRUCTURES**
( ) STATUTORY EXEMPTIONS:

REASONS WHY PROJECT IS EXEMPT: The City of San Diego conducted an initial study which determined that the bridge project is located within the public right of way and all improvements occur in non-sensitive areas. The entire project is in areas that have been previously disturbed. The project is not located in an area identified as archaeologically or biologically sensitive, and there are no hazardous waste sites in the vicinity. This project meets the criteria set forth in CEQA Sections 15301 (Existing facilities) which allows for improvements to existing facilities involving negligible or no expansion of use beyond existing, and 15303 (New construction) which allows for construction of new small facilities or structures; and where the exceptions listed in CEQA Section 15300.2 would not apply.

LEAD AGENCY CONTACT PERSON: MYRA HERRMANN TELEPHONE: (619) 446-5372

IF FILED BY APPLICANT:

1. ATTACH CERTIFIED DOCUMENT OF EXEMPTION FINDING.
2. HAS A NOTICE OF EXEMPTION BEEN FILED BY THE PUBLIC AGENCY APPROVING THE PROJECT?
   ( ) YES ( ) NO

IT IS HEREBY CERTIFIED THAT THE CITY OF SAN DIEGO HAS DETERMINED THE ABOVE ACTIVITY TO BE EXEMPT FROM CEQA

Myra Herrmann, Senior Planner — 9/21/10

SIGNATURE/TITLE DATE

CHECK ONE:
(X) SIGNED BY LEAD AGENCY
( ) SIGNED BY APPLICANT

DATE RECEIVED FOR FILING WITH COUNTY CLERK OR OPR:

Revised September 21, 2010mjh

CATEGORICAL EXEMPTION/ CATEGORICAL EXCLUSION DETERMINATION FORM

City of San Diego	N/A	965105	HPLU 5004(168)
Dist.-Co.-Rte. (or Local Agency)	P.M/P.M.	E.A. (State project)	Federal-Aid Project No. (Local project)/ Proj. No.

PROJECT DESCRIPTION:
(Briefly describe project, purpose, location, limits, right-of-way requirements, and activities involved.)

Enter project description in this box. Use Continuation Sheet, if necessary

The City of San Diego proposes to construct a pedestrian overcrossing (POC) bridge on Shoal Creek Drive over Ted Williams Parkway in the Carmel Mountain Ranch Community of the City of San Diego. The pedestrian bridge will provide a safe passage for the school children and other pedestrians and bicyclists crossing Ted Williams Parkway. The conditions listed on the continuation pages are a requirement of this CE.

CEQA COMPLIANCE *(for State Projects only)*

Based on an examination of this proposal, supporting information, and the following statements (See 14 CCR 15300 et seq.):

- If this project falls within exempt class 3, 4, 5, 6 or 11, it does not impact an environmental resource of hazardous or critical concern where designated, precisely mapped and officially adopted pursuant to law.
- There will not be a significant cumulative effect by this project and successive projects of the same type in the same place, over time.
- There is not a reasonable possibility that the project will have a significant effect on the environment due to unusual circumstances.
- This project does not damage a scenic resource within an officially designated state scenic highway.
- This project is not located on a site included on any list compiled pursuant to Govt. Code § 65962.5 ("Cortese List").
- This project does not cause a substantial adverse change in the significance of a historical resource.

CALTRANS CEQA DETERMINATION (Check one)

☐ **Exempt by Statute.** (PRC 21080[b]; 14 CCR 15260 et seq.)

Based on an examination of this proposal, supporting information, and the above statements, the project is:

☐ **Categorically Exempt. Class ____.** (PRC 21084; 14 CCR 15300 et seq.)

☐ **Categorically Exempt. General Rule exemption.** [This project does not fall within an exempt class, but it can be seen with certainty that there is no possibility that the activity may have a significant effect on the environment (CCR 15061[b][3])

Print Name: Environmental Branch Chief		Print Name: Project Manager/DLA Engineer	
Signature	Date	Signature	Date

NEPA COMPLIANCE

In accordance with 23 CFR 771.117, and based on an examination of this proposal and supporting information, the State has determined that this project:

- does not individually or cumulatively have a significant impact on the environment as defined by NEPA and is excluded from the requirements to prepare an Environmental Assessment (EA) or Environmental Impact Statement (EIS), and
- has considered unusual circumstances pursuant to 23 CFR 771.117(b) (http://www.fhwa.dot.gov/hep/23cfr771.htm - sec.771.117).

In non-attainment or maintenance areas for Federal air quality standards, the project is either exempt from all conformity requirements, or conformity analysis has been completed pursuant to 42 USC 7506(c) and 40 CFR 93.

CALTRANS NEPA DETERMINATION (Check one)

☒ **Section 6004:** The State has been assigned, and hereby certifies that it has carried out, the responsibility to make this determination pursuant to Chapter 3 of Title 23, United States Code, Section 326 and a Memorandum of Understanding (MOU) dated June 7, 2010, executed between the FHWA and the State. The State has determined that the project is a Categorical Exclusion under:

- 23 CFR 771.117(c): activity (c)(☒ 3)
- 23 CFR 771.117(d): activity (d)(☐)
- Activity listed in the MOU between FHWA and the State

☐ **Section 6005:** Based on an examination of this proposal and supporting information, the State has determined that the project is a CE under Section 6005 of 23 U.S.C. 327.

Kevin Hovey		Erwin Gojuangco	
Print Name: Environmental Branch Chief		Print Name: Project Manager/DLA Engineer	
Signature	Date 6/14/10	Signature	Date 6-14-10

Briefly list environmental commitments on continuation sheet. Reference additional information, as appropriate (e.g., air quality studies, documentation of conformity exemption, FHWA conformity determination if Section 6005 project; §106 commitments; §4(f); §7 results; Wetlands Finding; Floodplain Finding; additional studies; and design conditions). **Revised June 7, 2010**

City of San Diego	N/A	965105	HPLU 5004 (168)
Dist.-Co.-Rte. (or Local Agency)	P.M/P.M.	E.A. (State project)	Federal-Aid Project No. (Local project)/ Proj. No.

Continued from page 1:

Requirements from Visual Impact Assessment:

The project will follow the commitments from the Visual Impact Assessment.
Architectural commitments include:

1. The columns and ramp abutments will be faced with river rock similar to the pilasters.
2. The structural portions of the ramp will be faced with earth-tone colored concrete to complement the river rocks.
3. The railing will be metal and either light or dark brown.
4. The western fence of the overcrossing will have no decoration and will be fenced with brown or tan-coated chain link.
5. The project will include recessed down-lights on the inside of the low walls bordering the ramp and will not be visible from the street.
6. The overcrossing will be constructed with concrete stained in a natural-tone: tan or brown.
7. The sides of the structure will extend above the walking surface of the ramp by 2.5 feet to allow room for recessed lighting that would shine on the walking surface.
8. Chain link fence installed along both sides of the portion of the structure that extends above the roadway will be vinyl coated in a tan or brown color.
9. The shape of the metal screens will mimic the shape of the mountains visible to the east of the Carmel Mountain Ranch community. The mountain shapes of the metal screens will transition into bicycle-safety-height railings at the southeastern end of the bridge.

Landscaping commitments include:

1. The project will include landscaping at each end of the overcrossing consisting of shrubs, ground cover, and trees.
2. The landscaping at the southern end of the overcrossing will include ground cover to stabilize the slopes; colorful, flowering shrubs bordering the existing sidewalk and the trail portion of the existing project; and three jacaranda trees to match existing street trees.
3. The portion of the existing lawn that will be disturbed by project construction will be replaced.
4. Landscaping on the northern end of the pedestrian overcrossing also would consist of colorful shrubs, with ground cover and mulch between, as well as three strawberry trees.
5. The ornamental pear tree at the southeastern corner of Shoal Creek Drive and Stoney Gate Place will either be salvaged and replaced or replaced in kind. The portion of the lawn around the tree will be replaced as well.

Requirements from Landscape Concept Plan:

1. All landscape and irrigation shall conform to the standards of the City-wide Landscape Regulations and the City of San Diego Land Development Manual Landscape Standards and all other landscape-related City and Regional standards.

2. All graded, disturbed, or eroded areas that will not be permanently paved or supporting structures shall be permanently re-vegetated and irrigated as per City of San Diego Land Development Manual Standards.

Landscaped areas shall be irrigated by permanent, below-ground, centrally controlled automatic irrigation systems adequate for the establishment and maintenance of all plant material. All irrigation systems shall be equipped with rain sensors to automatically shut off the system during periods of high rainfall. Landscaped areas shall be planted within 30 days of completion of bridge installation. All soils shall be tested in order to promote healthy and vigorous plant growth, soils shall be fertilized, amended, and/or tilled in conformance with the recommendations made by the soil testing laboratory and/or landscape architect. All planting areas shall be covered with two inches of organic mulch.
Maintenance: All required landscape and irrigation areas shall be maintained by the City for 90 days, after which the maintenance will be the responsibility of the homeowner's association. The landscape areas shall be maintained free of debris and litter and all plant material shall be maintained in a healthy growing condition. Diseased or dead plant material shall be satisfactorily treated or replaced per the conditions of the permit.
Final plant palettes, including quantities and container sizes, will be determined based on review and approval by the neighboring community and homeowner's association. Plant layouts and locations also will be determined based on these reviews.

Requirements from Natural Environment Study-Minimal Impacts:

The proposed project has the potential to impact birds protected by the Migratory Bird Treaty Act (MBTA) if construction would occur during the breeding season. To ensure compliance with the MBTA, a pre-construction nest survey of the proposed project impact footprint, once it is defined within the Biologically Sensitive Area (plus 150 feet beyond the footprint), should be conducted by a qualified biologist if construction will occur during the breeding season (February 15th-August 31st). If an active nest is found, construction activities should be precluded within 150 feet of the nest until a qualified biologist determines that the nest is no longer active. If construction would occur outside the breeding season, no pre-construction survey will be required.

Hazardous Waste:

If yellow paint or yellow thermal plastic paint stripe or pavement marking is to be removed by itself (without asphalt) during construction activities, proper precautions must be taken to avoid worker exposure, and the paint material must be collected, handled, and disposed as a hazardous waste.

Requirements for Adjacent Community Impacts:

The City will coordinate with (and ultimately provide) the owner of the adjacent property at 14019 Stoney Gate Place with 1) a wall on their property to exclude bridge users from entering and walking upon their property and 2) screen plantings on their property to further shield the house from the view from those who will use the pedestrian bridge.

Construction:

Construction will take place in two stages. The project will start in January 2011 and last for one year.
Stage One: will narrow Shoal Creek Drive by 12' providing area to stage material for the pedestrian bridge. Improvements along Ted Williams Parkway will be completed first to limit the duration of a potential lane closure. Construction activities along Ted Williams Parkway are to be restricted to the hours between 9:00am and 4:00pm Monday through Saturday.
Stage Two: will construct bridge abutments and the deck for the overcrossing. The work for this stage will take place at night and will require a full closure of Ted Williams Parkway. Ted Williams Parkway and Shoal Creek Drive may be closed to vehicular and pedestrian traffic between the hours of 8:30PM and 3:30 AM up to five nights during the project construction. The contractor will provide a temporary traffic control plan and a closure schedule to the Engineer and the Engineering Traffic Control Section at least two weeks prior to a scheduled closure. A permit must be obtained from the Engineering Traffic Control Section. The contractor will notify the Shoal Creek Elementary School Principal at least two days prior to a nighttime closure. Local resident access to Shoal Creek Drive will be provided by the contractor at all times. Ted Williams Parkway will be open for traffic by 5:00am the following mornings.

Although no alternate routes or detours are anticipated during normal construction activities, the following routes will be given to the travelling public for the night work and the duration of the project:
Eastbound on Ted Williams Parkway: will be encouraged to divert northbound onto Rancho Carmel Drive, then eastbound onto Carmel Mountain Ranch, then southbound onto Highland Ranch Road, and return to Ted Williams Parkway.
Westbound on Ted Williams Parkway: will be encouraged to divert northbound onto Highland Ranch Road, then westbound onto Carmel Mountain Road, then southbound onto Rancho Carmel Drive, and return to Ted Williams Parkway.
The public will be notified through media releases, local TV and news, and internet bulletins/notifications.

Construction Requirements for Public Safety:

The contractor will provide convenient and safe access to Shoal Creek Elementary School at all times during construction. The sidewalk along the west side of Shoal Creek Drive will remain open for the duration of the project except during nighttime road closures. The sidewalk on the east side of Shoal Creek Drive and west of Highland Ranch Drive shall be closed to pedestrians for the duration of construction. The construction area, including the contractor staging area, will be contained with temporary fencing (six feet tall). The fencing will be relocated to facilitate construction and replaced and secured at the end of each work shift. No access to the contractor staging area at the southwest corner of Shoal Creek Drive and Ted Williams Parkway will be permitted during the start and end of the Shoal Creek Elementary School between the hours of 7:30 AM to 8:30 AM and from 2:00 PM to 3:30 PM.

APPENDIX B

Fire Hydrant Meter Program

CITY OF SAN DIEGO CALIFORNIA DEPARTMENT INSTRUCTIONS	NUMBER DI 55.27	DEPARTMENT Water Department
SUBJECT FIRE HYDRANT METER PROGRAM (FORMERLY: CONSTRUCTION METER PROGRAM)	PAGE 1OF 10	EFFECTIVE DATE October 15, 2002
	SUPERSEDES DI 55.27	DATED April 21, 2000

1. **PURPOSE**

1.1 To establish a Departmental policy and procedure for issuance, proper usage and charges for fire hydrant meters.

2. **AUTHORITY**

2.1 All authorities and references shall be current versions and revisions.

2.2 San Diego Municipal Code (NC) Chapter VI, Article 7, Sections 67.14 and 67.15

2.3 Code of Federal Regulations, Safe Drinking Water Act of 1986

2.4 California Code of Regulations, Titles 17 and 22

2.5 California State Penal Code, Section 498B.0

2.6 State of California Water Code, Section 110, 500-6, and 520-23

2.7 Water Department Director

Reference

2.8 State of California Guidance Manual for Cross Connection Programs

2.9 American Water Works Association Manual M-14, Recommended Practice for Backflow Prevention

2.10 American Water Works Association Standards for Water Meters

2.11 U.S.C. Foundation for Cross Connection Control and Hydraulic Research Manual

3. **DEFINITIONS**

3.1 **Fire Hydrant Meter:** A portable water meter which is connected to a fire hydrant for the purpose of temporary use. (These meters are sometimes referred to as Construction Meters.)

3.2 **Temporary Water Use:** Water provided to the customer for no longer than twelve (12) months.

3.3 **Backflow Preventor:** A Reduced Pressure Principal Assembly connected to the outlet side of a Fire Hydrant Meter.

4. POLICY

4.1 The Water Department shall collect a deposit from every customer requiring a fire hydrant meter and appurtenances prior to providing the meter and appurtenances (see Section 7.1 regarding the Fees and Deposit Schedule). The deposit is refundable upon the termination of use and return of equipment and appurtenances in good working condition.

4.2 Fire hydrant meters will have a 2 ½" swivel connection between the meter and fire hydrant. The meter shall not be connected to the 4" port on the hydrant. All Fire Hydrant Meters issued shall have a Reduced Pressure Principle Assembly (RP) as part of the installation. Spanner wrenches are the only tool allowed to turn on water at the fire hydrant.

4.3 The use of private hydrant meters on City hydrants is prohibited, with exceptions as noted below. All private fire hydrant meters are to be phased out of the City of San Diego. All customers who wish to continue to use their own fire hydrant meters must adhere to the following conditions:

a. Meters shall meet all City specifications and American Water Works Association (AWWA) standards.

b. Customers currently using private fire hydrant meters in the City of San Diego water system will be allowed to continue using the meter under the following conditions:

1. The customer must submit a current certificate of accuracy and calibration results for private meters and private backflows annually to the City of San Diego, Water Department, Meter Shop.

2. The meter must be properly identifiable with a clearly labeled serial number on the body of the fire hydrant meter. The serial number shall be plainly stamped on the register lid and the main casing. Serial numbers shall be visible from the top of the meter casing and the numbers shall be stamped on the top of the inlet casing flange.

3. All meters shall be locked to the fire hydrant by the Water Department, Meter Section (see Section 4.7).

4. All meters shall be read by the Water Department, Meter Section (see Section 4.7).

5. All meters shall be relocated by the Water Department, Meter Section (see Section 4.7).

6. These meters shall be tested on the anniversary of the original test date and proof of testing will be submitted to the Water Department, Meter Shop, on a yearly basis. If not tested, the meter will not be allowed for use in the City of San Diego.

7. All private fire hydrant meters shall have backflow devices attached when installed.

8. The customer must maintain and repair their own private meters and private backflows.

9. The customer must provide current test and calibration results to the Water Department, Meter Shop after any repairs.

10. When private meters are damaged beyond repair, these private meters will be replaced by City owned fire hydrant meters.

11. When a private meter malfunctions, the customer will be notified and the meter will be removed by the City and returned to the customer for repairs. Testing and calibration results shall be given to the City prior to any re-installation.

12. The register shall be hermetically sealed straight reading and shall be readable from the inlet side. Registration shall be in hundred cubic feet.

13. The outlet shall have a 2 ½ "National Standards Tested (NST) fire hydrant male coupling.

14. Private fire hydrant meters shall not be transferable from one contracting company to another (i.e. if a company goes out of business or is bought out by another company).

4.4 All fire hydrant meters and appurtenances shall be installed, relocated and removed by the City of San Diego, Water Department. All City owned fire hydrant meters and appurtenances shall be maintained by the City of San Diego, Water Department, Meter Services.

4.5 If any fire hydrant meter is used in violation of this Department Instruction, the violation will be reported to the Code Compliance Section for investigation and appropriate action. Any customer using a fire hydrant meter in violation of the requirements set forth above is subject to fines or penalties pursuant to the Municipal Code, Section 67.15 and Section 67.37.

4.6 **Conditions and Processes for Issuance of a Fire Hydrant Meter**

Process for Issuance

a. Fire hydrant meters shall only be used for the following purposes:

1. Temporary irrigation purposes not to exceed one year.

2. Construction and maintenance related activities (see Tab 2).

b. No customer inside or outside the boundaries of the City of San Diego Water Department shall resell any portion of the water delivered through a fire hydrant by the City of San Diego Water Department.

c. The City of San Diego allows for the issuance of a temporary fire hydrant meter for a period not to exceed 12 months (365 days). An extension can only be granted in writing from the Water Department Director for up to 90 additional days. A written request for an extension by the consumer must be submitted at least 30 days prior to the 12 month period ending. No extension shall be granted to any customer with a delinquent account with the Water Department. No further extensions shall be granted.

d. Any customer requesting the issuance of a fire hydrant meter shall file an application with the Meter Section. The customer must complete a "Fire Hydrant Meter Application" (Tab 1) which includes the name of the company, the party responsible for payment, Social Security number and/or California ID, requested location of the meter (a detailed map signifying an exact location), local contact person, local phone number, a contractor's license (or a business license), description of specific water use, duration of use at the site and full name and address of the person responsible for payment.

e. At the time of the application the customer will pay their fees according to the schedule set forth in the Rate Book of Fees and Charges, located in the City Clerk's Office. All fees must be paid by check, money order or cashiers check, made payable to the City Treasurer. Cash will not be accepted.

f. No fire hydrant meters shall be furnished or relocated for any customer with a delinquent account with the Water Department.

g. After the fees have been paid and an account has been created, the

meter shall be installed within 48 hours (by the second business day). For an additional fee, at overtime rates, meters can be installed within 24 hours (within one business day).

4.7 **Relocation of Existing Fire Hydrant Meters**

a. The customer shall call the Fire Hydrant Meter Hotline (herein referred to as "Hotline"), a minimum of 24 hours in advance, to request the relocation of a meter. A fee will be charged to the existing account, which must be current before a work order is generated for the meter's relocation.

b. The customer will supply in writing the address where the meter is to be relocated (map page, cross street, etc). The customer must update the original Fire Hydrant Meter Application with any changes as it applies to the new location.

c. Fire hydrant meters shall be read on a monthly basis. While fire hydrant meters and backflow devices are in service, commodity, base fee and damage charges, if applicable, will be billed to the customer on a monthly basis. If the account becomes delinquent, the meter will be removed.

4.8 **Disconnection of Fire Hydrant Meter**

a. After ten (10) months a "Notice of Discontinuation of Service" (Tab 3) will be issued to the site and the address of record to notify the customer of the date of discontinuance of service. An extension can only be granted in writing from the Water Department Director for up to 90 additional days (as stated in Section 4.6C) and a copy of the extension shall be forwarded to the Meter Shop Supervisor. If an extension has not been approved, the meter will be removed after twelve (12) months of use.

b. Upon completion of the project the customer will notify the Meter Services office via the Hotline to request the removal of the fire hydrant meter and appurtenances. A work order will be generated

for removal of the meter.

c. Meter Section staff will remove the meter and backflow prevention assembly and return it to the Meter Shop. Once returned to the Meter Shop the meter and backflow will be tested for accuracy and functionality.

d. Meter Section Staff will contact and notify Customer Services of the final read and any charges resulting from damages to the meter and backflow or its appurtenance. These charges will be added on the customer's final bill and will be sent to the address of record. Any customer who has an outstanding balance will not receive additional meters.

e. Outstanding balances due may be deducted from deposits and any balances refunded to the customer. Any outstanding balances will be turned over to the City Treasurer for collection. Outstanding balances may also be transferred to any other existing accounts.

5. EXCEPTIONS

5.1 Any request for exceptions to this policy shall be presented, in writing, to the Customer Support Deputy Director, or his/her designee for consideration.

6. MOBILE METER

6.1 Mobile meters will be allowed on a case by case basis. All mobile meters will be protected by an approved backflow assembly and the minimum requirement will be a Reduced Pressure Principal Assembly. The two types of Mobile Meters are vehicle mounted and floating meters. Each style of meters has separate guidelines that shall be followed for the customer to retain service and are described below:

a) **Vehicle Mounted Meters**: Customer applies for and receives a City owned Fire Hydrant Meter from the Meter Shop. The customer mounts the meter on the vehicle and brings it to the Meter Shop for

inspection. After installation is approved by the Meter Shop the vehicle and meter shall be brought to the Meter Shop on a monthly basis for meter reading and on a quarterly basis for testing of the backflow assembly. Meters mounted at the owner's expense shall have the one year contract expiration waived and shall have meter or backflow changed if either fails.

b) **Floating Meters**: Floating Meters are meters that are not mounted to a vehicle. **(Note: All floating meters shall have an approved backflow assembly attached.)** The customer shall submit an application and a letter explaining the need for a floating meter to the Meter Shop. The Fire Hydrant Meter Administrator, after a thorough review of the needs of the customer, (i.e. number of jobsites per day, City contract work, lack of mounting area on work vehicle, etc.), may issue a floating meter. At the time of issue, it will be necessary for the customer to complete and sign the "Floating Fire Hydrant Meter Agreement" which states the following:

    1) The meter will be brought to the Meter Shop at 2797 Caminito Chollas, San Diego on the third week of each month for the monthly read by Meter Shop personnel.

    2) Every other month the meter will be read and the backflow will be tested. This date will be determined by the start date of the agreement.

If any of the conditions stated above are not met the Meter Shop has the right to cancel the contract for floating meter use and close the account associated with the meter. The Meter Shop will also exercise the right to refuse the issuance of another floating meter to the company in question.

Any Fire Hydrant Meter using reclaimed water shall not be allowed use again with any potable water supply. The customer shall incur the cost of replacing the meter and backflow device in this instance.

7. FEE AND DEPOSIT SCHEDULES

7.1 **Fees and Deposit Schedules:** The fees and deposits, as listed in the Rate Book of Fees and Charges, on file with the Office of the City Clerk, are based on actual reimbursement of costs of services performed, equipment and materials. Theses deposits and fees will be amended, as needed, based on actual costs. Deposits, will be refunded at the end of the use of the fire hydrant meter, upon return of equipment in good working condition and all outstanding balances on account are paid. Deposits can also be used to cover outstanding balances.

All fees for equipment, installation, testing, relocation and other costs related to this program are subject to change without prior notification. The Mayor and Council will be notified of any future changes.

8. UNAUTHORIZED USE OF WATER FROM A HYDRANT

8.1 Use of water from any fire hydrant without a properly issued and installed fire hydrant meter is theft of City property. Customers who use water for unauthorized purposes or without a City of San Diego issued meter will be prosecuted.

8.2 If any unauthorized connection, disconnection or relocation of a fire hydrant meter, or other connection device is made by anyone other than authorized Water Department personnel, the person making the connection will be prosecuted for a violation of San Diego Municipal Code, Section 67.15. In the case of a second offense, the customer's fire hydrant meter shall be confiscated and/or the deposit will be forfeited.

8.3 Unauthorized water use shall be billed to the responsible party. Water use charges shall be based on meter readings, or estimates when meter readings are not available.

8.4 In case of unauthorized water use, the customer shall be billed for all applicable charges as if proper authorization for the water use had been obtained, including but not limited to bi-monthly service charges, installation charges and removal charges.

8.5 If damage occurs to Water Department property (i.e. fire hydrant meter, backflow, various appurtenances), the cost of repairs or replacements will be charged to the customer of record (applicant).

Water Department Director

Tabs: 1. Fire Hydrant Meter Application
2. Construction & Maintenance Related Activities With No Return To Sewer
3. Notice of Discontinuation of Service

APPENDIX

Administering Division: Customer Support Division

Subject Index:
Construction Meters
Fire Hydrant
Fire Hydrant Meter Program
Meters, Floating or Vehicle Mounted
Mobile Meter
Program, Fire Hydrant Meter

Distribution: DI Manual Holders

City of San Diego **Water Department**

Application For Fire Hydrant Meter

(EXHIBIT A)

For Office Use Only	
NS Rec:	FAC #:
Date:	By:

2797 Caminito Chollas • San Diego, California 92105-5097 METER SHOP 619 527 7449 FAX 619 527 3125

Meter Information

Application Date:	Requested Install Date:

Fire Hydrant Location: (Attach detailed map, Thomas Bros. map location or construction drawing.)

Specific Use of Water:

Any return to Sewer or Storm Drain, if so, explain:

Estimated Duration of Meter Use: ☐ ☐ Check Box if Reclaimed Water

Company Information

Company Name:			
Mailing Address:			
City:	State:	Zip Code:	Phone: ( )
*Business License #:		*Contractor License #:	

*A copy of the Contractor's License and/or Business License is required at the time of meter issuance.

Name and Title of Agent:	Phone: ( )
Site Contact Name and Title:	Phone: ( )
Pager #:	Cell : ( )
Responsible Party Name:	Title:
Social Security or Cal ID #:	Phone: ( )

Signature: Date:

Guarantees payment of all charges resulting from the use of this meter. Insures that employees of this organization understand the proper use of Fire Hydrant Meter.

Fire Hydrant Meter Removal Request

☐ Check Box to Request Removal of Above Meter | Requested Removal Date:

Provide current Meter location if different from above:

Signature:	Title:	Date:
Phone: ( )	Pager: ( )	

For Office Use Only

☐ City Meter ☐ Private Meter

CIS Account #:	Deposit Amount: $	Fees Amount: $	
Meter Serial #:	Meter Size:	Meter Make & Style:	
Backflow #:	Backflow Size:	Meter Make & Style:	
Name:	Signature:	Date:	

$1,108.45 - FOR 24 HR INSTALLATION
$1,052.26 - FOR 48 HR INSTALLATION

FHM App Created: 11/2/00-htp

"Exhibit B"

CONSTRUCTION AND MAINTENANCE RELATED ACTIVITIES WITH NO RETURN TO SEWER:

Auto Detailing
Backfilling
Combination Cleaners (Vactors)
Compaction
Concrete Cutters
Construction Trailers
Cross Connection Testing
Dust Control
Flushing Water Mains
Hydro blasting
Hydro Seeding
Irrigation (for establishing irrigation only; not continuing irrigation)
Mixing Concrete
Mobile Car Washing
Special Events
Street Sweeping
Water Tanks
Water Trucks
Window Washing

Note: If there is any return to sewer or storm drain, then sewer and/or storm drain fees will be charged.

"Exhibit C"

Date

Name of Responsible Party
Company Name and address
Account Number: _____

Subject: Discontinuation of Fire Hydrant Meter Service

Dear Water Department Customer:

The authorization for use of Fire Hydrant Meter #_____, located at (Meter location address) ends in 60 days and will be removed on or after (Date authorization expires). Extension requests for an additional 90 days must be submitted in writing for consideration 30 days prior to the discontinuation date. If you require an extension, please refer to the Water Departments', Department Instruction (D.I.) 55.27 for further information and procedure.

Mail your request for an extension to :

City of San Diego, Water Department
Attn: Meter Services
2797 Caminito Chollas
San Diego, Ca. 92105-5097

Should you have any questions regarding this matter, please call the Fire Hydrant "Hot Line" at: (xxx) xxx-xxxx.

Sincerely,

City of San Diego Water Department

City of San Diego Water Department

Fire Hydrant Meter Relocate/Removal Request

(EXHIBIT D)

For Office Use Only	
NS Req:	FHM Fac #:
Date	By

Date:

Instruction: Complete pertinent information then FAX both form and map to (xxx) xxx-xxxx, mail, or hand-deliver to the City of San Diego, Water Deparmtnet/Meter Shop at: 2707 Caminito Chollas San Diego, CA 92105

Meter Information

Billing Account #:	Requested Move Date:
Current Fire Hydrant Meter Location:	
New Meter Location: (Attach a detailed map, Thomas Bros map location or construction drawing.)	

Company Information

Company Name:			
Mailing Address			
City:	State:	Zip Code:	Phone: ( )
Name and Title of Requestor:			Phone: ( )
Site Contact Name and Title			Phone: ( )
Pager #:			Cell : ( )
Responsible Party Name authorizing relocation fee:			
Signature:	Title:		Date:

Fire Hydrant Meter Removal Request

☐ Check Box to Request Removal of Above Meter	Requested Removal Date:
Provide current Meter location if different from above:	

Signature:	Title:	Date:
Phone: ( )	Pager: ( )	

For Office Use Only

CIS Account #:	Fees Amount: $		
Meter Serial #:	Size:	Make/Style	
Backflow #:	Size:	Make/Style	
Name:	Signature:		Date:

FHM Relocate_Removal Form

FHM App Created: 11/2/00-htp

APPENDIX C

Hydrostatic Discharge Form

APPENDIX C

Hydrostatic Discharge Requirements Certification (Discharge Events < 500,000 gpd)

All discharge activities related to this project comply with the Regional Water Quality Control Board (RWQCB) Order No. 2002-0020, General Permit for Discharges of Hydrostatic Test Water and Potable Water to Surface Water and Storm Drains as referenced by (http://www.swrcb.ca.gov/rwqcb9/board_decisions/adopted_orders/2002/2002_0020.shtml), and as follows:

Discharged water has been dechlorinated to below **0.1** *(mg/l)* level; and effluent has been maintained between **6** and **9** *(PH)* based on:							***is discharge within acceptable limits?***		***Comment***
Event #	**Discharge Date & Amount (GAL)**	**Discharge Time**	**Meter Readings (at source)**	**Test Results (Chlorine / PH)**	**Name of Personnel Conducting Tests (print)**	***signature of personnel**	***yes***	***no***	
	Date	Start:	Start:						
	Amt:	End:	End:						
	Date	Start:	Start:						
	Amt:	End:	End:						
	Date	Start:	Start:						
	Amt:	End:	End:						
	Date	Start:	Start:						
	Amt:	End:	End:						
	Date	Start:	Start:						
	Amt:	End:	End:						
	Date	Start:	Start:						
	Amt:	End:	End:						
	Date	Start:	Start:						
	Amt:	End:	End:						
	Date	Start:	Start:						
	Amt:	End:	End:						
	Date	Start:	Start:						
	Amt:	End:	End:						
	Date	Start:	Start:						
	Amt:	End:	End:						
	Date	Start:	Start:						
	Amt:	End:	End:						
	Date	Start:	Start:						
	Amt:	End:	End:						
	Date	Start:	Start:						
	Amt:	End:	End:						

By signing, I certify that all of the statements and conditions for hydrostatic discharge events are correct.

Project Name: _____ ***Work Order No.(s):*** _____

Have any thresholds have been exceeded? Per Order No. 2002-0020, would this be a reportable discharge and must be reported **within 24 hours** of the event? [Reportable discharge would include violation of maximum gallons per day, any upset which exceeds any effluent limit]

APPENDIX D

Sample City Invoice

City of San Diego, Field Engineering Div., 9485 Aero Drive, SD CA 92123					Contractor's Name:					
Project Name:					Contractor's Address:					
SAP No. (WBS/IO/CC):										
City Purchase Order No. :					Contractor's Phone #:				Invoice No.	
Resident Engineer (RE):					Contractor's Fax #:				Invoice Date:	
RE Phone#:		RE Fax#:			Contact Name:				Billing Period:	
Item #	Item Description	Contract Authorization				Previous Estimate		This Estimate		Totals to Date	
		Unit	Qty	Price	Extension	%/QTY	Amount	% / QTY	Amount	% / QTY	Amount
1	2 Parallel 4" PVC C900	LF	1,380	$34.00	$46,920.00						
2	48" Primary Steel Casing	LF	500	$1,000.00	$500,000.00						
3	2 Parallel 12" Secondary Steel	LF	1,120	$53.00	$59,360.00						
4	Construction and Rehab of PS 49	LS	1	$150,000.00	$150,000.00						
5	Demo	LS	1	$14,000.00	$14,000.00						
6	Install 6' High Chain Link Fence	LS	1	$5,600.00	$5,600.00						
7	General Site Restoration	LS	1	$3,700.00	$3,700.00						
8	10" Gravity Sewer	LF	10	$292.00	$2,920.00						
9	4" Blow Off Valves	EA	2	$9,800.00	$19,600.00						
10	Bonds	LS	1	$16,000.00	$16,000.00						
11	Field Orders	AL	1	80,000	$80,000.00						
11.1	**Field Order 1**	**LS**	**5,500**	**$1.00**	$5,500.00						
11.2	**Field Order 2**	**LS**	**7,500**	**$1.00**	$7,500.00						
11.3	**Field Order 3**	**LS**	**10,000**	**$1.00**	$10,000.00						
11.4	**Field Order 4**	**LS**	**6,500**	**$1.00**	$6,500.00						
12	**Certified Payroll**	**LS**	**1**	**$1,400.00**	$1,400.00						
CHANGE ORDERS											
Change Order 1		**4,890**									
Items 1-4					**$11,250.00**						
Item 5-Deduct Bid Item 3		**LF**	**120**	**-$53.00**	**($6,360.00)**						
Change Order 2		**160,480**									
Items 1-3					**$95,000.00**						
Item 4 Deduct Bid Item 1		**LF**	**380**	**-$340.00**	**($12,920.00)**						
Item 5-Encrease bid Item 9		**LF**	**8**	**$9,800.00**	**$78,400.00**						
Change Order 3 (Close Out)		**-121,500**									
Item 1 Deduct Bid Item 3			**53**	**-500.00**	**($26,500.00)**						
Item 2 Deduct Bid Item 4		**LS**	**-1**	**45,000.00**	**($45,000.00)**						
Items 3-9			**1**	**-50,500.00**	**($50,500.00)**						
SUMMARY								Total This	$ -	**Total Billed**	$0.00
A. Original Contract Amount							**Retention and/or Escrow Payment Schedule**				
B. Approved Change Order 1 Thru 3							Total Retention Required as of this billing				
C. Total Authorized Amount (A+B)							Previous Retention Withheld in PO or in Escrow				
D. Total Billed to Date							Add'l Amt to Withhold in PO/Transfer in Escrow:				
E. Less Total Retention (5% of D)							Amt to Release to Contractor from PO/Escrow:				
F. Less Total Previous Payments											
G. Payment Due Less Retention						**Contractor Signature and Date:**					
H. Remaining Authorized Amount											

APPENDIX E

Preformed Loop Construction

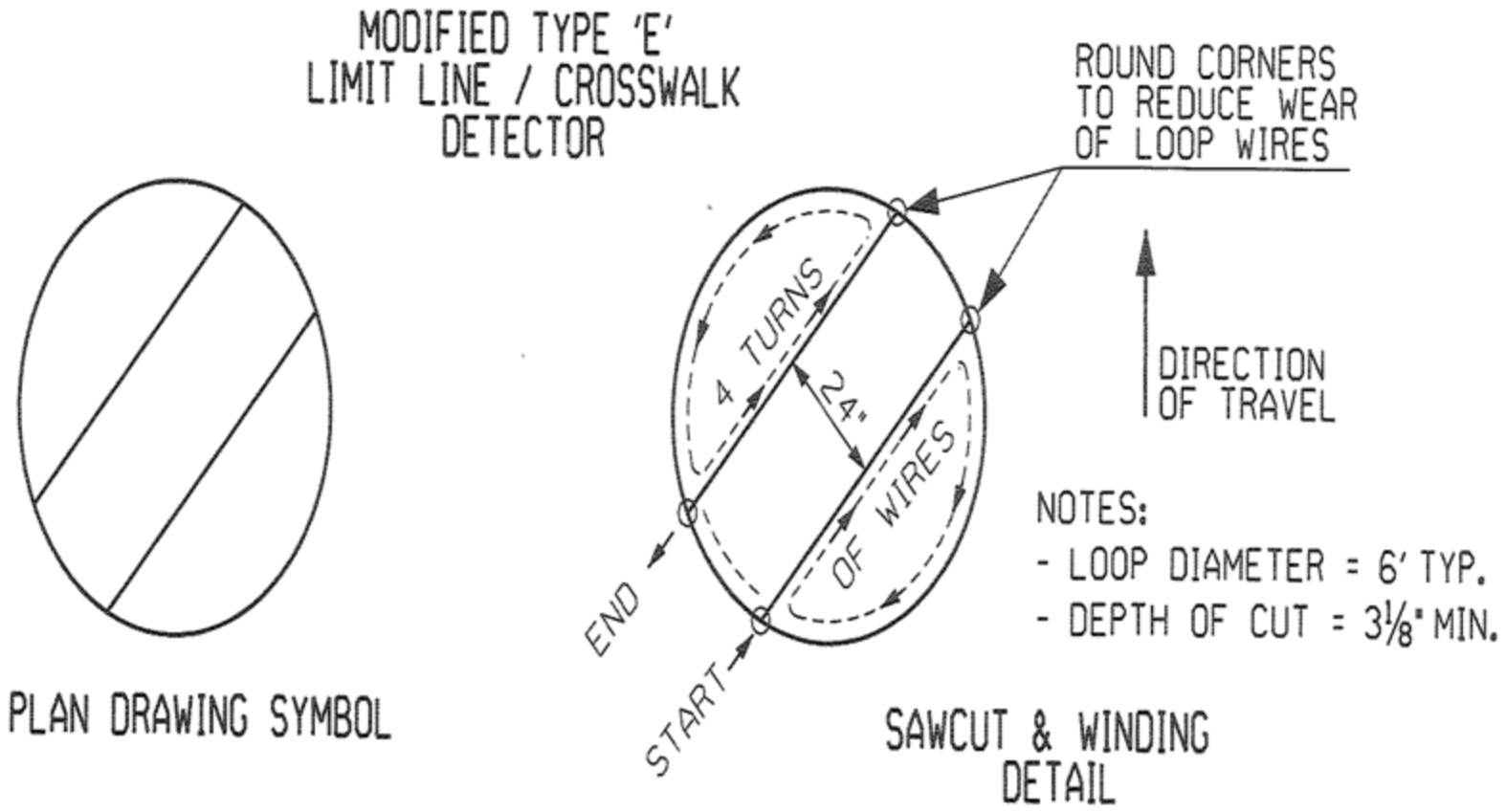

FIGURE 1 –TYPE 'E' MODIFIED LOOP

APPENDIX F

SDG&E Relocation Drawings

TED WILLIAMS PKWY PED OVERCROSSING

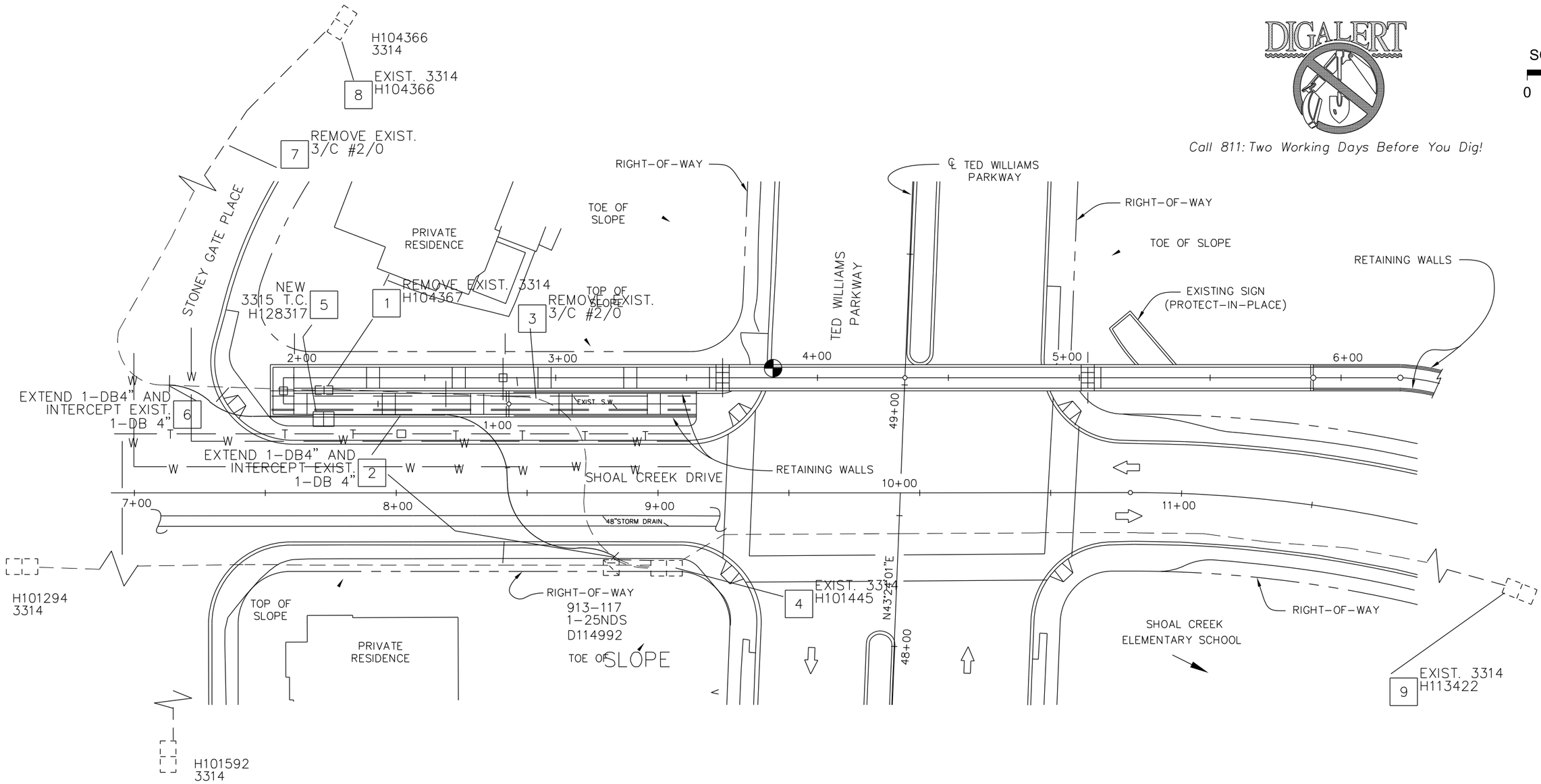

DIGALERT

Call 811: Two Working Days Before You Dig!

N

SCALE
0 20

2939260

DESIGNED BY: THOMAS FISHER
858-636-3995

SDGE SAN DIEGO GAS & ELECTRIC
ELECTRIC CONSTRUCTION ORDER
OH/UG BASE DRAWING

PLOT DATE: 09/28/10

PROJECT NO. 054958-040

CONSTRUCTION ORDER NO. 2939260

1 OF 2

REV/SUPP

Copyright 2003 San Diego Gas & Electric Company. All rights reserved.
Removal of this copyright notice without permission is not permitted under law.

2939260

APPENDIX G

Materials Typically Accepted by Certificate of Compliance

Materials Typically Accepted by Certificate of Compliance

1. Soil amendment
2. Fiber mulch
3. PVC or PE pipe up to 16 inch diameter
4. Stabilizing emulsion
5. Lime
6. Preformed elastomeric joint seal
7. Plain and fabric reinforced elastomeric bearing pads
8. Steel reinforced elastomeric bearing pads
9. Waterstops (Special Condition)
10. Epoxy coated bar reinforcement
11. Plain and reinforcing steel
12. Structural steel
13. Structural timber and lumber
14. Treated timber and lumber
15. Lumber and timber
16. Aluminum pipe and aluminum pipe arch
17. Corrugated steel pipe and corrugated steel pipe arch
18. Structural metal plate pipe arches and pipe arches
19. Perforated steel pipe
20. Aluminum underdrain pipe
21. Aluminum or steel entrance tapers, pipe downdrains, reducers, coupling bands and slip joints
22. Metal target plates
23. Paint (traffic striping)
24. Conductors
25. Painting of electrical equipment
26. Electrical components
27. Engineering fabric
28. Portland Cement
29. PCC admixtures
30. Minor concrete, asphalt
31. Asphalt (oil)
32. Liquid asphalt emulsion
33. Epoxy

APPENDIX H

Standard Plans List

Standard Plans List

The Standard Plan sheets applicable to this contract include, but are not limited to those indicated below. Applicable Revised Standard Plans (RSP) and New Standard Plans (NSP) indicated below are included in the project plans as Standard Plan sheets.

ACRONYMS, ABBREVIATIONS AND SYMBOLS

A10A	**Acronyms and Abbreviations (Sheet 1 of 2)**
A10B	**Acronyms and Abbreviations (Sheet 2 of 2)**
A10C	**Symbols (Sheet 1 of 2)**
A10D	**Symbols (Sheet 2 of 2)**
A62C	**Limits of Payment for Excavation and Backfill – Bridge**

TEMPORARY CRASH CUSHIONS, RAILING AND TRAFFIC SCREEN

RSP T1A	**Temporary Crash Cushion, Sand Filled (Unidirectional)**
RSP T1B	**Temporary Crash Cushion, Sand Filled (Bidirectional)**
RSP T2	**Temporary Crash Cushion, Sand Filled (Shoulder Installations)**
T3	**Temporary Railing (Type K)**

BRIDGE DETAILS

B0-1	**Bridge Details**
B0-3	**Bridge Details**
B0-5	**Bridge Details**
B0-13	**Bridge Details**
B3-9	**Retaining Wall Details No. 2**

JOINT SEALS

RSP B6-21	**Joint Seals (Maximum Movement Rating = 2")**

BOX GIRDER DETAILS

B7-1	**Box Girder Details**

DECK DRAINS

Deck Drains

CAST-IN-PLACE PRESTRESSED GIRDER

B8-5	**Cast-In-Place Prestressed Girder Details**

CHAIN LINK RAILING, CABLE RAILING AND TUBULAR HAND RAILING

B11-7	**Chain Link Railing**
B11-47	**Cable Railing**
B11-51	**Tubular Hand Railing**

B11-52	**Chain Link Railing Type 7**

ROADSIDE SIGNS

RS1	**Roadside Signs, Typical Installation Details No. 1**
RS2	**Roadside Signs – Wood Post, Typical Installation Details No. 2**
RS4	**Roadside Signs, Typical Installation Details No. 4**

ELECTRICAL SYSTEMS – DETECTORS

ES-8	**Electrical Systems (Pull Box Details)**
ES-9B	**Electrical Systems (Electrical Details, Structure Installations)**

APPENDIX I

Location Map

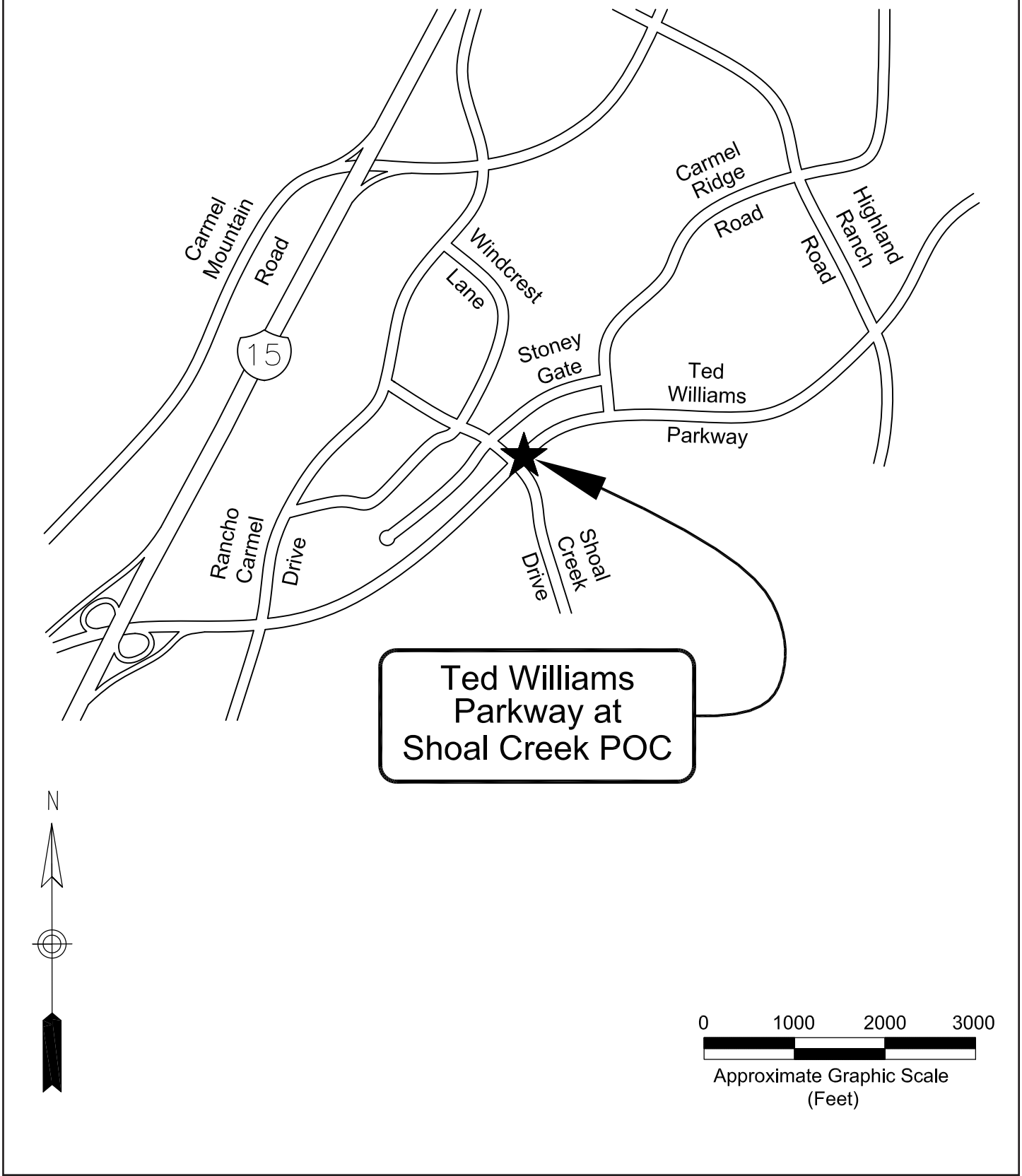

I:\ArcGIS\S\SWE-02 TWPOvercrossing\Map\Fig2_Location.indd -EV

Project Location Map

TED WILLIAMS PARKWAY PEDESTRIAN AND BICYCLE OVERCROSSING AT SHOAL CREEK DRIVE

Figure 2

APPENDIX J

Foundation Report

GEOCON
INCORPORATED

GEOTECHNICAL
CONSULTANTS

FOUNDATION REPORT

TED WILLIAMS PARKWAY PEDESTRIAN OVERCROSSING AT SHOAL CREEK DRIVE SAN DIEGO, CALIFORNIA

PREPARED FOR

SIMON WONG ENGINEERING
SAN DIEGO, CALIFORNIA

MARCH 30, 2009
PROJECT NO. 07926-22-01

Project No. 07926-22-01
March 30, 2009

Simon Wong Engineering
9968 Hibert Street, Suite 202
San Diego, California 92131

Attention: Mr. James Frost

Subject: TED WILLIAMS PARKWAY PEDESTRIAN
OVERCROSSING AT SHOAL CREEK DRIVE
SAN DIEGO, CALIFORNIA
FOUNDATION REPORT

Dear Mr. Frost:

In accordance with your authorization of our proposal LG-06406 dated October 19, 2006 (revised December 8, 2006), we herein submit our Foundation Report for the proposed Ted Williams Parkway Pedestrian Overcrossing at Shoal Creek Drive in San Diego, California. The accompanying report presents the findings and conclusions from our study.

If you have any questions regarding this report, or if we may be of further service, please contact the undersigned at your convenience.

Very truly yours,

GEOCON INCORPORATED

Yong Wang
GE 2775

REGISTERED PROFESSIONAL ENGINEER
YONG WANG
No. 2775
Exp. 6/30/10
GEOTECHNICAL
STATE OF CALIFORNIA

Joseph J. Vettel
GE 2401

REGISTERED PROFESSIONAL ENGINEER
JOSEPH J. VETTEL
No. 2401
EXP. 09/30/10
GEOTECHNICAL
STATE OF CALIFORNIA

YW:JJV:dmc

(6/del) Addressee

TABLE OF CONTENTS

1. INTRODUCTION 1

2. SCOPE OF SERVICES 1

3. PROJECT DESCRIPTION 2
   - 3.1 Background and Site Description 2
   - 3.2 Existing Structures 2
   - 3.3 Proposed Structure 2
   - 3.4 Pertinent Project Information 3

4. SITE GEOLOGY AND SUBSURFACE CONDITIONS 3
   - 4.1 Topography and Geology 3
   - 4.2 Pertinent Soil Conditions or Geologic Hazards 4
     - 4.2.1 Liquefaction 4
     - 4.2.2 Lateral Spreading 4
     - 4.2.3 Expansive Soils 4
     - 4.2.4 Corrosive Soils 5
     - 4.2.5 Collapsible Soils 5
   - 4.3 Project Site Soils 5
     - 4.3.1 Undocumented Fill 5
   - 4.4 Project Site Rocks 6
     - 4.4.1 Cretaceous Granitic Rock 6

5. GROUNDWATER 6

6. SCOUR EVALUATION 6

7. CORROSION EVALUATION 7

8. SEISMIC STUDY 7
   - 8.1 Active Faults and Peak Bedrock Acceleration 7
   - 8.2 Acceleration Response Spectra (ARS) Curves 8

9. AS-BUILT FOUNDATION DATA 9

10. FOUNDATION RECOMMENDATIONS 9
    - 10.1 Shallow Foundations 10
    - 10.2 Deep Foundations 11
      - 10.2.1 Special Considerations for Cast-In-Drilled-Hole (CIDH) Piles 15
      - 10.2.2 Special Considerations for Driven Piles 16
    - 10.3 Retaining Walls/Wingwalls 16
    - 10.4 Wall Backfill and Approach Fill Earthwork 16

11. SLOPE STABILITY ANALYSES 17

12. GENERAL NOTES TO DESIGNER 17

13. CONSTRUCTION CONSIDERATIONS 18

TABLE OF CONTENTS (Continued)

14. DISCLAIMER AND CONTACT INFORMATION 19

15. CLOSURE 19
15.1 Foundation and Grading Plan Review 19
15.2 Limitations and Uniformity of Conditions 19

16. REFERENCES 20

FIGURES
Figure 1, Vicinity Map
Figure 2, Site Plan/Geologic Map
Figure 3, Regional Geologic Map
Figure 4, Regional Seismic Map
Figure 5, Geologic Cross-Section A-A'
Figure 6, Recommended ARS Curve

APPENDIX A
FIELD INVESTIGATION
Table A-I, Summary of Borings
Figures A-1 – A-5, Logs of Borings
Log of Test Borings 1 and 2 (Map Pocket)

APPENDIX B
LABORATORY TESTING
Table B-I, Summary of Laboratory *In Situ* Moisture Content and Dry Density Test Results
Table B-II, Summary of Laboratory Grain Size Distribution Test Results
Table B-III, Summary of Laboratory Atterberg Limits Test Results
Table B-IV, Summary of Laboratory Direct Shear Test Results
Table B-V, Summary of Laboratory Potential of Hydrogen (pH) and Resistivity Test Results
Table B-VI, Summary of Laboratory Water-Soluble Sulfate Test Results
Table B-VII, Summary of Laboratory Chloride Content Test Results
Table B-VIII, Summary of Laboratory Expansion Index Test Results
Table B-IX, Summary of Laboratory Maximum Dry Density and Optimum Moisture Content Test Results
Table B-X, Summary of Laboratory R-Value Test Results
Figure B-1, Gradation Curve
Figure B-2, Consolidation Curve

APPENDIX C
ANALYSES AND CALCULATIONS

FOUNDATION REPORT

1. INTRODUCTION

This Foundation Report (FR) presents the results of the geotechnical investigation for the proposed Ted Williams Parkway Pedestrian Overcrossing at Shoal Creek Drive in the City of San Diego, California. The approximate site location is depicted on the *Vicinity Map*, Figure 1. The purpose of the investigation was to evaluate general subsurface geology and geotechnical conditions along the proposed bridge alignment, and to provide geotechnical recommendations for use in preparing project plans and specifications.

The recommendations presented herein are based on our analyses of the data obtained from exploratory borings, laboratory test results, engineering analyses, and our experience with similar soil and geologic conditions. The log of test boring (LOTB) sheets in Caltrans format, laboratory test results, and the analyses and calculations are presented as Appendices A, B, and C, respectively.

2. SCOPE OF SERVICES

Our scope of work included:

- Reviewing published geologic maps, aerial photographs, in-house documents, and other literature pertaining to the site to aid in evaluating geologic conditions and hazards that may be present.
- Obtaining boring permits from City of San Diego and County of San Diego Department of Environmental Health for the exploratory borings.
- Reviewing the project *Type Selection Report* prepared by Simon Wong Engineering, dated October 14, 2008.
- Drilling 5 small–diameter borings along the proposed crossing alignment to examine and sample the prevailing soil conditions.
- Performing laboratory tests on soil samples to evaluate unit weight, moisture content, pH, resistivity, soluble-sulfate content, chloride-ion content, grain size distribution, Atterberg Limits, shear strength, pavement support, consolidation, expansion and compaction characteristics of the prevailing soils.
- Performing engineering analyses to evaluate seismic design criteria, foundation design criteria, slope stability, liquefaction potential, and retaining wall design criteria.
- Preparing this FR in general accordance with Caltrans *Guidelines for Structures Foundation Reports, Version 2.0, March 2006.*

3. PROJECT DESCRIPTION

3.1 Background and Site Description

The City of San Diego plans to build a pedestrian bridge at the intersection of Ted Williams Parkway and Shoal Creek Drive in the Carmel Mountain Ranch area of San Diego, California. Specifically, the bridge alignment will extend along the existing green belt that parallels to the sidewalk on the northeast side of Shoal Creek Drive between Stoney Gate Place and approximately 100 feet southeast of its intersection with Ted Williams Parkway. This bridge will replace the existing at-grade crossing on Ted Williams Parkway that primarily serves the students of Shoal Creek Elementary School, located on the southwest corner of the intersection.

Ted Williams Parkway is a six-lane arterial roadway connecting State Route 56 to Carmel Mountain Ranch within the cities of San Diego and Poway. The beginning of the bridge will be located in a green belt zone adjacent to the existing sidewalk and the end of bridge will be located in the toe area of an adjacent building pad. Existing topography of along the proposed bridge alignment ranges from approximately 653 feet to 685 feet above mean sea level (MSL). The layout of bridge and the locations of exploratory borings are shown on *Site Plan/Geologic Map*, Figure 2.

3.2 Existing Structures

There are currently no existing bridge structures at the subject site. Major underground utilities include water main, sewer and storm drain that run parallel to Shoal Creek Drive in the roadway. These pipelines were likely installed using cut-and-cover trenching methods. Current plans indicate that these pipelines will be protected in place during the proposed construction. It is likely that the proposed Bent 5 is located very close to a segment of the existing water main.

3.3 Proposed Structure

Based on the *Bridge Type Selection Report* and General Plan prepared by Simon Wong Engineering, the proposed bridge will be a five-span, concrete structure with the longest span over Ted Williams Parkway of approximately 140 feet. The overall bridge length will extend approximately 487 feet from Station 10+00 to Station 14+87. Approximate 70 percent of the bridge length will be approach ramps.

The bridge supports will include four bents and two abutments (Abutment 1, Bents 2 to 5, and Abutment 6). Project plans regarding the bridge foundation are being developed. At the time of preparing this report, deep foundations consisting of CIDH piles for the bridge supports northwest of Ted Williams Parkway and spread footings for the supports southeast of Ted Williams Parkway are

being considered. In addition, approach fills on the order of 12 feet high will be required to establish proposed grades.

3.4 Pertinent Project Information

We reviewed the following preliminary engineering documents related to the project:

1. *Bridge Type Selection Report, Ted Williams Parkway Pedestrian/Bicycle Overcrossing at Shoal Creek Drive,* prepared by Simon Wong Engineering, October 14, 2008.

2. *Soil Investigation and Geologic Reconnaissance for Carmel Mountain Ranch, Units 3, 4, 4A and 36, San Diego, California,* prepared by Geocon Incorporated, dated November 15, 1985 (Project No. D-3071-T13).

3. *Geotechnical Investigation for Carmel Mountain Ranch 3.5 Million Gallon Reservoir, Pump Station and Access Road,* prepared by Geocon Incorporated, dated April 22, 1986 (Project D-3071-T17).

4. *Final Report of Testing and Observation Services during Mass Grading Operations for Camel Mountain Ranch Unit No. 3, San Diego, California,* prepared by Geocon Incorporated, dated March 26, 1987 (Project No. D-3071-T13).

5. *Final Report of Testing and Observation Services during Mass Grading Operations for Highway 56; Interstate 15 to Shoal Creek Drive; T.M. 87-0332, San Diego, California,* prepared by Geocon Incorporated, dated September 6, 1990 (Project No. 03071-02-11).

4. SITE GEOLOGY AND SUBSURFACE CONDITIONS

4.1 Topography and Geology

The topography of the site consists of flat to sloping terrain and generally drains to the northwest. The existing ground surface elevations along the bridge alignment range between approximate Elevations 653 feet above mean sea level (MSL) at the northwestern end of the bridge and approximate 685 feet (MSL) at the southeastern end of the bridge.

Site geology is referenced from the *Geology of San Diego Metropolitan Area, California, Poway Quadrangle* (California Division of Mines and Geology, Bulletin 200, 1975, Reprint 2001) and depicted on *Regional Geology Map*, Figure 3. The site is underlain by granitic rock of the Southern California Batholith.

The site is not underlain by known active or potentially active faults. Therefore, the potential for ground rupture due to faulting at the site is considered low. A seismic study including the regional

active faults and their impacts to the subject site in accordance with Caltrans procedure is provided in Section 8. A *Regional Seismic Map* is presented on Figure 4.

No landslides were observed during our site investigation and none are known to exist at a location that would impact the proposed bridge. Slope stability along the proposed bridge alignment is discussed in Section 11 of this report.

4.2 Pertinent Soil Conditions or Geologic Hazards

In addition to Section 4.1, the following sections discuss other potential geologic hazards evaluated for the project including liquefiable soils, expansive soils, corrosive soils, and collapsible soils.

4.2.1 Liquefaction

Liquefaction is a phenomenon in which loose, saturated and relatively cohesionless soil deposits located beneath the groundwater table lose strength during strong ground motions. Primary factors controlling liquefaction include intensity and duration of ground accelerations, characteristics of the subsurface soil, in situ stress conditions, and depth to groundwater. The potential for liquefaction at the site is considered low due to the presence of relatively shallow dense materials and the lack of permanent, near-surface groundwater.

4.2.2 Lateral Spreading

Lateral spreading can be expected in liquefiable sites adjacent to slopes such as river channels or large bodies of water. The observed horizontal ground displacement typically decreases with increased distances from the open face. The potential for lateral spreading at the site is considered low due to the presence of non-liquefiable materials.

4.2.3 Expansive Soils

Expansive soils possess a high swelling or shrinking potential due to change in moisture content. The common materials associated with high expansion potential are clays. The majority of the on-site soil is granular in nature and the proposed foundations will be supported by footings or piles embedded in low-expansive weathered rock. Thus, the potential for expansive soils to affect the proposed foundations is considered low.

4.2.4 Corrosive Soils

On-site soils are not considered corrosive in accordance with Caltrans guidelines. A detailed discussion is provided in Section 7 of this report.

4.2.5 Collapsible Soils

Collapsing soils are unsaturated soils that undergo a large volume change upon saturation, even without increase in external loads. Soils that generally display collapsible potential are porous and low dry density. Generally no porous or honeycomb structure was observed in collected soil samples. Surficial soils described as loose will be removed and recompacted as outlined in Section 10.4. Thus, the potential for collapsible soils on site is considered low.

4.3 Project Site Soils

The area planned to receive the proposed improvements is generally underlain by undocumented fill soils over granitic rock with variable weathering. Approximate subsurface conditions are depicted on the *Geologic Cross-Section A-A'* (Figure 5) along the bridge alignment. The soil conditions encountered are described in detail below and on the LOTB sheets presented in Appendix A.

4.3.1 Undocumented Fill

Undocumented fill (Qudf) was encountered in all five borings. The undocumented fill encountered in borings consists primarily of loose to very dense silty sand, clayey sand and stiff to very stiff, sandy clay, silty clay with varying amounts of gravel. The materials were likely derived from local alluvium and/or weathered granitic rock during previous grading of the site. The thickness of the undocumented fill encountered in borings ranging from approximately 37 feet in Boring B-3 to approximately one foot in Boring B-5.

The existing condition of undocumented fill is unsuitable for direct support of the proposed bridge structure. The bridge foundation should transmit loads to the underlying geologic formation. Grading consisting of removal and recompaction of the existing fill will be required in the areas planned to receive new improvements. The extents of the removal to exposed competent soils may vary with locations but generally within 10 feet.

For excavation purposes, the undocumented fill can be considered as a Cal-OSHA Type B soil where water is not freely seeping and should be considered a Type C soil if water is freely seeping. All excavations and trenches should be properly maintained and/or shored in accordance with applicable OSHA rules and regulations for the safety and stability of adjacent existing improvements.

4.4 Project Site Rocks

Cretaceous-age granitic rocks of the Southern California Batholith are mapped underlying the entire site. The rocks are expected to be in varying degree of weathering from decomposed to relatively fresh and should possess good to excellent bearing characteristics. Detailed descriptions of the granitic rock encountered in our borings are presented in Section 4.4.1.

4.4.1 Cretaceous Granitic Rock

Cretaceous-age granitic rock (Kgr) was encountered below the surficial undocumented fill in all five borings. This geologic unit consists primarily of decomposed, moderately hard rock that excavates as silty, fine to coarse sand with remnant crystalline structure. The granitic rock encountered in our borings has good bearing characteristics for the support of the proposed bridge foundations.

5. GROUNDWATER

Groundwater levels encountered in our borings B-1 and B-3 are summarized in Table 5 below. The table also includes the approximate boring elevations. The approximate locations of these borings are depicted on *Site Plan/Geologic Map* and *Geologic Cross-Section A-A'*, Figures 2 and 5, respectively.

TABLE 5
GROUNDWATER OBSERVATIONS

Boring ID	Boring Elevation (MSL)	Depth to Groundwater (MSL)	Groundwater Elevation (MSL)
B-1	653.0 feet ±	39.5 feet ±	613.5 feet ±
B-3	663.0 feet ±	35.0 feet ±	628.0 feet ±

Perched water may be encountered on top of or within the decomposed granite in areas that receive heavy irrigation. We expect groundwater will affect the deep foundation constructions in zones below the groundwater level.

6. SCOUR EVALUATION

Scour potential at the project site should refer to the project hydrology/hydraulic report. Because there is no river crossing involved with the subject bridge, a scour evaluation is not likely be warranted.

7. CORROSION EVALUATION

According to *Caltrans Corrosion Guidelines* (Version 1.0, September 2003), a site is considered corrosive to foundation elements if chloride concentration is 500 ppm or greater, or sulfate concentration is 2000 ppm or greater, or the pH is 5.5 or less. The current Caltrans' Memo to Designer 3-1 also indicates that a site is considered corrosive when pH is 5.5 or less, or when the soil has a minimum resistivity of less than 1000 ohm-centimeters, and either contains a chloride concentration of 500 ppm (or greater) or a sulfate concentration of 2000 ppm (or greater).

Potential of Hydrogen (pH), resistivity, chlorides content, and soluble-sulfate content tests were performed on one sample selected at random to generally evaluate the corrosion potential to subsurface structures. These tests were performed in accordance with California Test Method Nos. 643, 417, and 422. The results are summarized in Table 7, which indicates that the site need not be considered a corrosive environment in accordance with Caltrans criteria. The results are presented in Appendix B and should be considered for design of underground structures.

TABLE 7
SOIL CORROSION TEST SUMMARY

Location Boring & Sample No.	Sample Top Depth (feet)	Resistivity (ohm centimeters)	pH	Chloride Content (ppm)	Sulfate Content (ppm)
B3-1	0 to 3	1,800	7.2	80	100

Proposed improvements in contact with the ground should be designed and constructed in accordance with the Caltrans Standard Specifications and good construction practices. Geocon does not practice in the field of corrosion engineering. If corrosion sensitive improvements are planned, we recommend that further evaluations by a corrosion engineer be performed to incorporate the necessary precautions to avoid premature corrosion on corrosion sensitive structures in direct contact with the soils.

8. SEISMIC STUDY

8.1 Active Faults and Peak Bedrock Acceleration

Seismic design parameters are provided in accordance with *Caltrans Seismic Design Criteria* (Version 1.4, June 2006). We identified active faults near the site in accordance with the *Caltrans California Seismic Hazard Map* (1996) and *Technical Report to Accompany the Caltrans California Seismic Hazard Map* (1996). Based on the map and accompanying report, the closest active fault to the site is the Newport-Inglewood-Rose Canyon/E Fault (NIE) located approximately 12.4 miles west.

According to the referenced Caltrans literature, this fault is capable of generating a maximum earthquake moment magnitude (M_w) of 7.0.

The NIE/E Fault is a strike-slip fault. For the purposes of bridge design, a maximum earthquake event along these faults is expected to generate a horizontal peak bedrock acceleration (PBA) at the project site of approximately 0.3g, where "g" represents the acceleration due to gravity. Table 8.1 summarizes the recommended seismic design parameters in accordance with Caltrans procedures:

TABLE 8.1
SEISMIC DESIGN PARAMETERS

Parameters	Recommended for Design
Controlling Fault	Newport-Inglewood-Rose Canyon/E (NIE)
Style of Fault	Strike-slip
Distance from Fault to Site	12.4 miles
Maximum Credible Earthquake Magnitude	7.00
Peak Bedrock Acceleration	0.3g
Soil Profile Type	C

The site is not located within an Alquist-Priolo Earthquake Study Zone as established by the State Geologist around known active faults. Review of available literature and field reconnaissance revealed no active fault trace through or near the site. The presence of faulting was not encountered during the field investigation.

8.2 Acceleration Response Spectra (ARS) Curves

In conjunction with the MCE and PBA defined by the *Caltrans California Seismic Hazard Map* (1996) and *Technical Report to Accompany the Caltrans California Seismic Hazard Map* (1996), we recommend using the following standard ARS curve contained in Caltrans *Seismic Design Criteria, Version 1.4,* June 2006: Newport-Inglewood-Rose Canyon/E (NIE) – Elastic Response Spectra Curves (5% damping) for Soil Profile Type C (M=7.25±0.25)

Since the site is not located within 10 miles of the NIE fault and alluvium thicker than 250 feet is not expected at the site, spectral ordinates on the standard ARS curve for this fault should not be modified. The standard ARS curve is illustrated on Figure 6.

9. AS-BUILT FOUNDATION DATA

No existing structures are present at the subject site and thus As-Built foundation data are not available.

10. FOUNDATION RECOMMENDATIONS

According to current Caltrans' guidelines, foundation design for abutments and bents are based on Working Stress Design (WSD) and Load and Resistance Factor Design (LRFD), respectively. The proposed bridge may be supported by a combination of spread footings and Cast-In-Drilled-Hole (CIDH) piles foundation system. Specifically, the proposed Bent 5 and Abutment 6 may be supported by spread footings and the proposed Abutment 1 and Bents 2 through 4 may be supported by CIDH piles. The preliminary foundation information from structure design is summarized in Table 10.1 below. Based on the discussion with the designer, deep foundations consist of 24-inch diameter CIDH piles and 60-inch diameter CIDH piles are been considered. The design loads of these piles from structure design are presented in Tables 10.2 and 10.3. Our recommendations are presented in the following sections.

TABLE 10.1
PRELIMINARY FOUNDATION DESIGN DATA

Support No.	Design Method	Foundation Type Considered	Cut-Off Elevation (ft)	Permissible Settlement under Service Load (in)*	Estimate of Maximum Factored Compression Loads (kips)
Abut 1	WSD	2-24" CIDH, or one 60" CIDH	657 or 657	1	73 per 24" CIDH, or 146 per 60" CIDH
Bent 2	LRFD	2-24" CIDH, or one 60" CIDH	648 or 650	1	103 per 24" CIDH, or 412 per 60" CIDH
Bent 3	LRFD	2-24" CIDH, or one 60" CIDH	655 or 657	1	95 per 24" CIDH, or 380 per 60" CIDH
Bent 4	LRFD	2-24" CIDH, or one 60" CIDH	660 or 662	1	116 per 24" CIDH, or 464 per 60" CIDH
Bent 5	LRFD	Spread Footing	---	1	---
Abut 6	WSD	Spread Footing	---	1	---

*Based on Caltrans' current practice, the total permissible settlement in one inch for multi-span structures with continuous spans or multi-column bents, one inch for single span structures with diaphragm abutments, and two inches for single span structures with seat abutments. Different permissible settlement under services loads may be allowed if structure analysis verifies that required level of serviceability is met.

TABLE 10.2
DESIGN LOADS FROM STRUCTURE DESIGN FOR 24-INCH CIDH PILES

Support No.	Service-I Limit State Total Load Max per Pile	Strength Limit State		Extreme Event Limit State	
		Compression Max per Pile	Tension Max per Pile	Compression Max per Pile	Tension Max per Pile
Abut 1	73 kips	NA	N/A	N/A	N/A
Bent 2	N/A	138 kips	0	254 kips	83 kips
Bent 3	N/A	127 kips	0	248 kips	90 kips
Bent 4	N/A	154 kips	0	268 kips	70 kips

TABLE 10.3
DESIGN LOADS FROM STRUCTURE DESIGN FOR 60-INCH CIDH PILES

Support No.	Service-I Limit State Total Load Max per Pile	Strength Limit State		Extreme Event Limit State	
		Compression Max per Pile	Tension Max per Pile	Compression Max per Pile	Tension Max per Pile
Abut 1	146 kips	NA	N/A	N/A	N/A
Bent 2	N/A	550 kips	0	342 kips	0
Bent 3	N/A	507 kips	0	316 kips	0
Bent 4	N/A	615 kips	0	395 kips	0

10.1 Shallow Foundations

Based on the subsurface conditions encountered in our borings, shallow foundations are considered appropriate for the support of proposed Bent 5 and Abutment 6. Foundation recommendations regarding other bridge supports and retaining walls/wingwalls are presented in Sections 10.2 and 10.3, respectively.

The approximately 10 feet of undocumented fill in proposed Bent 5 area should be removed to expose competent granitic rock and backfilled to footing level with 2-sack cement slurry. Abutment 6 can be supported by spread footings in competent granitic rock following the removal of minor amounts of undocumented fill. The maximum allowable bearing capacity of approximately 6,000 pounds per square feet (psf) is recommended for spread footings in cement-slurry backfill at Bent 5 as well as in competent granitic rock at Abutment 6.

Bottoms of spread footings should be at least of 3 feet in width and embedded at least 3 feet below the adjacent grade. Footings at Abutment 6 should be extended in depth such that the outer bottom edge of the footing is at least 7 feet horizontally from the face of the slope.

Settlement of spread footings in slurry and/or decomposed granite imposing the maximum allowable bearing pressure is not expected to exceed ½ inch. The differential settlement between two consecutive spread footings is expected to be less than ¼ inch.

10.2 Deep Foundations

Deep foundation consists of 24-inch diameter CIDH and 60-inch diameter CIDH piles are being considered for the support at Abutment 1, and Bents 2 through 4. The CIDH piles will develop support by both end bearing and shaft resistance in granitic rock at depth. Foundation recommendations and pile data tables are presented in Tables 10.2.1, 10.2.2, 10.2.3, and 10.2.4 in accordance with Caltrans' LRFD procedure for bridge foundations.

TABLE 10.2.1
FOUNDATION RECOMMENDATIONS FOR ABUTMENT 1

Support No	Pile Type	Cut-off Elevation (ft)	LRFD Service-I Limit State Load per Support (kips)		LRFD Service-I Limit State Total Load per Pile (kips) (Compression)	Nominal Resistance (kips)	Design Tip Elevations (ft)	Specified Tip Elevation (ft)
			Total	Permanent				
Abut 1	24" CIDH	657	---	---	73	150	623 [(a)] 628 [(c)] --- [(d)]	623
	60" CIDH	657	---	---	146	300	623 [(a] 627 [(c)] --- [(d)]	623

Notes:
1. Design tip elevations are controlled by: (a) compression, (c) settlement, and (3) lateral load, respectively.
2. The specified tip elevation shall not be raised above the design tip elevations for lateral load and tolerable settlement.
3. Design tip elevation for lateral load is typically provided by structural design.
4. Load per support to be provided by structure design.

TABLE 10.2.2
FOUNDATION RECOMMENDATIONS FOR BENTS

Support No	Pile Type	Cut-off Elevation (ft)	Service-I Limit State Load (kips) per Support	Total Permissible Support Settlement (inches)	Required Factored Nominal Resistance (kips)				Design Tip Elevations (ft)	Specified Tip Elevation (ft)
					Strength Limit		Extreme Event			
					Comp. (ϕ=0.7)	Tension (ϕ=0.7)	Comp. (ϕ=1)	Tension (ϕ=1)		
Bent 2	24″ CIDH	648	---	1	138	0	254	83	614 (a-I) 611 (a-II) 620 (b-II) 618 (c) --- (d)	611
	60″ CIDH	650	---	1	550	0	342	0	608 (a-I) 613 (a-II) 617 (c) --- (d)	608
Bent 3	24″ CIDH	655	---	1	127	0	248	90	623 (a-I) 621 (a-II) 626 (b-II) 628 (c) --- (d)	621
	60″ CIDH	657	---	1	507	0	316	0	618 (a-I) 623 (a-II) 627 (c) --- (d)	618
Bent 4	24″ CIDH	660	---	1	154	0	268	70	622 (a-I) 621 (a-II) 633 (b-II) 626 (c) --- (d)	621
	60″ CIDH	662	---	1	615	0	395	0	616 (a-I) 621 (a-II) 625 (c) --- (d)	616

Notes:
1. Design tip elevations for 24-inch CIDH piles are controlled by: (a-I) compression (strength limit), (a-II) compression (extreme event), (b-II) tension (extreme event), (c) settlement, and (d) lateral load.
2. Design tip elevations for 60-inch CIDH piles are controlled by: (a-I) compression (strength limit), (a-II) compression (extreme event), (c) settlement, and (d) lateral load.
3. The specified tip elevation shall not be raised above the design tip elevations for tension, lateral load and tolerable settlement.
4. Design tip elevation for lateral load is typically provided by structural design.
5. Load per support to be provided by structure design.

TABLE 10.2.3
PILE DATA TABLE FOR 24-INCH CIDH PILES

Support No	Pile Type	Cut-off Elevation (ft)	Nominal Resistance (kips)		Design Tip Elevations (ft)	Specified Tip Elevation (ft)
			Compression	Tension		
Abut 1	24" CIDH	657	150	N/A	623 (a) 628 (c) --- (d)	623
Bent 2	24" CIDH	648	260	90	611 (a) 620 (b) 618 (c) --- (d)	611
Bent 3	24" CIDH	655	250	90	621 (a) 626 (b) 628 (c) --- (d)	621
Bent 4	24" CIDH	660	270	70	621 (a) 633 (b) 626 (c) --- (d)	621

Notes:
1. Design tip elevations for abutment 1 are controlled by: (a) compression, (c) settlement, and (d) lateral load.
2. Design tip elevations for bents are controlled by: (a) compression, (b) tension, (c) settlement, and (d) lateral load.
3. The specified tip elevation shall not be raised above the design tip elevations for tension, lateral load and tolerable settlement.
4. Design tip elevation for lateral load is typically provided by structural design.

TABLE 10.2.4
PILE DATA TABLE FOR 60-INCH CIDH PILES

Support No	Pile Type	Cut-off Elevation (ft)	Nominal Resistance (kips)		Design Tip Elevations (ft)	Specified Tip Elevation (ft)
			Compression	Tension		
Abut 1	60" CIDH	657	300	N/A	623 (a) 627 (c) --- (d)	623
Bent 2	60" CIDH	650	790	N/A	608 (a) 617 (c) --- (d)	608
Bent 3	60" CIDH	657	730	N/A	618 (a) 627 (c) --- (d)	618
Bent 4	60" CIDH	662	880	N/A	616 (a) 625 (c) --- (d)	616

Notes:
1. Design tip elevations are controlled by: (a) compression, (c) settlement, and (d) lateral load.
2. The specified tip elevation shall not be raised above the design tip elevations for lateral load and tolerable settlement.
3. Design tip elevation for lateral load is typically provided by structural design.

Based on the current Caltrans guidelines (Memo to Designers 3-1, July 2008, LRFD version), the design tip elevation for lateral load should be typically provided by Structure Design. We understand that the specified pile length should not be less than the critical length for which greater lengths do not results in a significant reduction in deflection at the pile top. Our recommended soil and pile parameters for LPILE analyses including the soil unit weights, soil friction angles, soil modulus, soil shear strength, and soil strain value are provided in Tables 10.2.5, 10.2.6, and 10.2.7 below.

TABLE 10.2.5
RECOMMENDED SOIL PARAMETERS FOR L-PILE ANALYSIS
ABUTMENT 1 AND BENT 3

Soil Layer	Soil Model (LPILE)	Elevation (ft)		Unit Weight (pci)	Friction Angle (°)	K (pci)	Cohesion (psi)	E_{50}
		Top	Bottom					
1	Silt	659	654	0.0752	29	70	1.39	0.005
2	Sand	654	643	0.0752	33	90	---	---
3	Silt	643	639	0.0752	33	100	2.78	0.005
4	Sand	639	628	0.0752	35	100	---	---
5	Sand	628	623	0.0781	40	230	---	---
6	Sand	623	--	0.0420	40	140	---	---

Reference: Boring B-2.

TABLE 10.2.6
RECOMMENDED SOIL PARAMETERS FOR L-PILE ANALYSIS
BENT 2

Soil Layer	Soil Model (LPILE)	Elevation (ft)		Unit Weight (pci)	Friction Angle (°)	K (pci)	Cohesion (psi)	E_{50}
		Top	Bottom					
1	Silt	653	642	0.0752	29	50	1.74	0.007
2	Silt	642	634	0.0752	32	100	2.78	0.005
3	Sand	634	623	0.0752	35	100	---	---
4	Sand	623	618	0.0752	36	160	---	---
5	Sand	618	614	0.0781	40	230	---	---
6	Sand	614	--	0.0420	40	140	---	---

Reference: Boring B-1.

TABLE 10.2.7
RECOMMENDED SOIL PARAMETERS FOR L-PILE ANALYSIS
BENT 4

Soil Layer	Soil Model (LPILE)	Elevation (ft)		Unit Weight (pci)	Friction Angle (°)	K (pci)	Cohesion (psi)	E_{50}
		Top	Bottom					
1	Sand	663	660	0.0752	31	100	---	---
2	Sand	660	652	0.0752	33	90	---	---
3	Silt	652	647	0.0752	32	100	2.43	0.006
4	Sand	647	628	0.0752	35	120	---	---
5	Sand	628	626	0.0391	35	60	---	---
6	Sand	626	--	0.0420	40	140	---	---

Reference: Boring B-3.

No multiple rows of pile are planned at each support thus a group reduction factor for resistance is not recommended assuming a center-to-center spacing of at least 3 pile diameters. Settlement of piles imposing the design load is expected to be less than ¾ inch. Settlements should be essentially complete shortly after completion of the bridge superstructure.

10.2.1 Special Considerations for Cast-In-Drilled-Hole (CIDH) Piles

Excavations for CIDH piles should be possible with normal, dry and/or wet method drilling techniques. In general, weathering of the granitic rock decreases with depth but is highly variable. The contractor should be aware that difficult drilling could be encountered if less weathered materials are encountered. The contractor should have appropriate excavating tools for drilling decomposed to slightly weathered rock.

CIDH pile installations below groundwater level will likely require pumping water from borehole and/or wet construction methods. Because the CIDH piles will develop some support in end bearing, all loose material should be removed from the borehole prior to placement of reinforcing steel and concrete. Experience indicates that backspinning the auger does not sufficiently clean the borehole. A flat cleanout plate will be necessary. If boreholes are left open overnight or for extended periods of time, cleaning and/or re-drilling of the hole will be necessary. The concrete should be placed in such a way as to minimize segregation of the aggregate. Tremies should be utilized for concrete placed below groundwater. Initial set of the concrete should be achieved before an adjacent borehole is drilled. Casing, if used should be removed as concrete is placed. The level of the concrete should be maintained above the level of the bottom of the casing.

10.2.2 Special Considerations for Driven Piles

Deep foundations with driven piles are not selected by current design. Geocon Incorporated should be contacted for special considerations if driven piles are selected during final design.

10.3 Retaining Walls/Wingwalls

Abutments and wingwalls are typically unrestrained retaining walls that are allowed to rotate more than 0.001H (where H equals the height of the retaining wall portion of the wall) at the top of the wall. Retaining walls not restrained at the top and having a level backfill surface should be designed for an active soil pressure equivalent to the pressure exerted by a fluid density of 36 pcf in accordance with Caltrans Bridge Design Specifications 3.20.1. For retaining walls subject to vehicular loads within a horizontal distance equal to two-thirds the wall height, a surcharge equivalent to 2 feet of fill soil (unit weight of 125 pcf) should be added. Soil placed for retaining wall backfill should meet the requirements outlined in *Section 10.4* of this report.

An allowable bearing capacity of 3,500 pounds per square foot can be used provided wall footings are at least 18 inches wide and founded 12 inches below adjacent grades bearing entirely in structural fill. Lateral loads can be resisted by an allowable passive earth pressure equivalent to a fluid density of 300 pcf for footings or shear keys poured neat against properly compacted fill soils. The upper 12 inches of material not protected by floor slabs or pavement should not be included in the design for lateral resistance. An allowable friction coefficient of 0.35 may be used for resistance to sliding between soil and concrete. This friction coefficient may be combined with the allowable passive earth pressure when determining resistance to lateral loads.

All retaining walls should be provided with a drainage system adequate to prevent the buildup of hydrostatic forces. The drainage system should consist of weepholes or backdrains. The above recommendations assume a properly compacted granular backfill material with no hydrostatic forces. If conditions different than those described are anticipated, or if specific drainage details are desired, Geocon should be contacted for additional recommendations.

10.4 Wall Backfill and Approach Fill Earthwork

All grading should be performed in conformance with Sections 6-3, 19-3, 19-5, and 19-6 of the Caltrans Standard Specifications or equivalent. Backfill placed behind abutment walls, retaining walls and wing walls should have a very low to low expansion potential. The extent and placement of the low-expansive soils should conform to Caltrans Standard Specifications 19-5.03. Backfill should have an Expansion Index (EI) no greater than 50 and a Sand Equivalent of 20 or greater. Ponding or jetting of backfill should not be permitted.

Backfill placed within the full width of the embankment and within 150 feet of the abutment is considered structural backfill. All structural backfill should be compacted to 95 percent of the maximum density as determined by ASTM D 1557-02 or CTM 216. All compaction on the project should be based on this test method. All other backfill should be compacted to a minimum of 90 percent relative compaction. Near surface, loose undocumented fill soils at abutment locations are not adequate for the support of new fill loads, and partial removal and recompaction will be necessary prior to the placement of structural backfill and foundation construction.

The upper portion of existing undocumented fill should be removed to expose competent materials and recompacted. Boring B-2 near Abutment 1 indicates that removal depths may range up to 10 feet. Actual removal depths should be evaluated in the field and may be extended at the discretion of the geotechnical engineer if soft, loose, or wet material is encountered.

Surface settlements can be expected where substantial thicknesses of new fill will be placed. We understand up to 12 feet of embankment fill will be placed to raise the approach ramp near Abutment 1. Settlements will occur both as a result of compression in existing fill beneath the new fill, and as a result of compression within the new fill itself. Total settlement of embankment fills within is estimated to be less than one inch assuming that new fills are granular in nature. Settlement is expected to be essentially complete shortly after placement. No settlement period is considered necessary.

11. SLOPE STABILITY ANALYSES

Planned earthwork does not include significant new cut and fill slopes along the bridge alignment. The approximately 2H:1V (horizontal to vertical) slope at the end of planned bridge appears to be in good condition, and should have a factor of safety greater than 1.5 against deep-seated and shallow failures under static loading and a factor of safety greater than 1.1 under pseudo-static (seismic) loading.

Consideration should be given to the use of surface treatments to minimize surficial erosion until adequate erosion-resistant vegetation can become established. All roadway drainage should be directed to appropriate collection and discharge facilities to prevent run-off from flowing over the tops of slopes.

12. GENERAL NOTES TO DESIGNER

This report is prepared based on the currently available project information including the proposed structure and pile foundations described in Sections 3.3 and 10.2, respectively. The minimum pile tip elevations for proposed abutments and bent are listed in recommended pile data tables (Tables 10.2.3 and 10.2.4).

13. CONSTRUCTION CONSIDERATIONS

Areas to be developed should be cleared and stripped of obstructions, trees, bushes, grass, roots, and the upper few inches of soil containing organic debris. Soils/organics removed by stripping can be transported off-site or stockpiled for use in landscaping. Existing drainage and utility lines or other existing subsurface structures that are not to be utilized, if any, should be removed, destroyed or abandoned in compliance with applicable regulations.

For excavation purposes, the undocumented fill can be considered as a Cal-OSHA Type B soil where water is not freely seeping and should be considered a Type C soil if water is freely seeping. All excavations and trenches should be properly maintained and/or shored in accordance with applicable OSHA rules and regulations for the safety and stability of adjacent existing improvements.

The undocumented fill can be considered as a Cal-OSHA Type B soil where water is not freely seeping and should be considered a Type C soil if water is freely seeping. For temporary construction purposes, a maximum slope ratio of 1:1 (horizontal:vertical) may be used for Type B soil up to 20 feet in height. Overexcavation in cohesionless sand will require 1½:1 slope or flatter.

Foundation excavation to remove approximately 10 feet of undocumented fill and backfilled with 2-sack cement slurry to spread footing level is expected at Bent 5. Because no person would be required to enter the excavation that remain open for a short period of time while the slurry is placed, the sides can be excavated near vertical to accommodate the tight constraints of the site.

The Contractor should provide appropriate shoring systems such as sheet piling or soldier beams for any other unsupported excavations not meeting Cal-OSHA requirements. Recommendations concerning vertical shoring systems can be provided upon request. Temporary excavations should be in compliance with applicable governing agency regulations. The Contractor should also execute a monitoring program for structures in proximity to deep excavations so that appropriate modifications to the excavation/shoring system can be implemented to minimize the surface deflection or structure damage in a timely manner, if warranted. The contractor should also provide a temporary dewatering system if excavations extend below the groundwater elevation.

Foundation excavations should be observed by a representative of Geocon prior to the placement of reinforcing steel and concrete. CIDH pile drilling should also be observed by a representative of Geocon. If unanticipated soil conditions are encountered, foundation modifications may be required.

14. DISCLAIMER AND CONTACT INFORMATION

The recommendations contained in this report are based on specific project information regarding structure type, location, and design loads that have been provided by Simon Wong Engineering. If any changes are made during final project design, Geocon should review those changes to determine if these foundation recommendations are still applicable. Any questions regarding the above recommendations should be directed to the attention of Mr. Yong Wang, 858-558-6900, at the San Diego Office of Geocon.

15. CLOSURE

15.1 Foundation and Grading Plan Review

Geocon should review the grading plans and foundation plans prior to final design submittal to determine whether additional analysis and/or recommendations are required.

15.2 Limitations and Uniformity of Conditions

The recommendations of this report pertain only to the site investigated and are based upon the assumption that soil conditions do not deviate from those disclosed in the investigation. If any variations or undesirable conditions are encountered during construction, or if the proposed construction will differ from that anticipated herein, Geocon should be notified so that supplemental recommendations can be given. The evaluation or identification of the potential presence of hazardous or corrosive materials was not part of the scope of services provided by Geocon.

This report is issued with the understanding that it is the responsibility of the owner or his representative to ensure that the information and recommendations contained herein are brought to the attention of the architect and engineer for the project and incorporated into the plans, and that the necessary steps are taken to see that the contractor and subcontractors carry out such recommendations in the field.

The findings of this report are valid as of the present date. However, changes in the conditions of a property can occur with the passage of time, whether due to natural processes or the works of man on this or adjacent properties. In addition, changes in applicable or appropriate standards may occur, whether they result from legislation or the broadening of knowledge. Accordingly, the findings of this report may be invalidated wholly or partially by changes outside our control. Therefore, this report is subject to review and should not be relied upon after a period of three years. Our professional services were performed in accordance with generally acceptable geotechnical engineering principles and practices in the site area at this time. No warranty is provided, express or implied.

16. REFERENCES

1. California Department of Transportation, 1996, *California Seismic Hazard Map.*

2. California Department of Transportation, 2003, *Corrosion Guidelines, Version 1.0.*

3. California Department of Transportation, March 2006, *Guidelines for Structures Foundation Reports, Version 2.0.*

4. California Department of Transportation, 2001, *Highway Design Manual.*

5. California Department of Transportation, 2006, *Seismic Design Criteria, Version 1.4.*

6. California Department of Transportation, 1999, *Standard Specifications.*

7. California Division of Mines and Geology, *Geology of San Diego Metropolitan Area, California*, Bulletin 200, 1975, Reprint 2001.

8. *Soil Investigation and Geologic Reconnaissance for Carmel Mountain Ranch, Units 3, 4, 4A and 36, San Diego, California,* prepared by Geocon Incorporated, dated November 15, 1985 (Project No. D-3071-T13).

9. *Geotechnical Investigation for Carmel Mountain Ranch 3.5 Million Gallon Reservoir, Pump Station and Access Road,* prepared by Geocon Incorporated, dated April 22, 1986 (Project D-3071-T17).

10. *Final Report of Testing and Observation Services during Mass Grading Operations for Camel Mountain Ranch Unit No. 3, San Diego, California,* prepared by Geocon Incorporated, dated March 26, 1987 (Project No. D-3071-T13).

11. *Final Report of Testing and Observation Services during Mass Grading Operations for Highway 56; Interstate 15 to Shoal Creek Drive; T.M. 87-0332, San Diego, California,* prepared by Geocon Incorporated, dated September 6, 1990 (Project No. 03071-02-11).

12. Simon Wong Engineering, October 14, 2008, *Bridge Type Selection Report, Ted Williams Parkway Pedestrian/Bicycle Overcrossing at Shoal Creek Drive.*

13. Unpublished reports, aerial photographs and maps on file with Geocon.

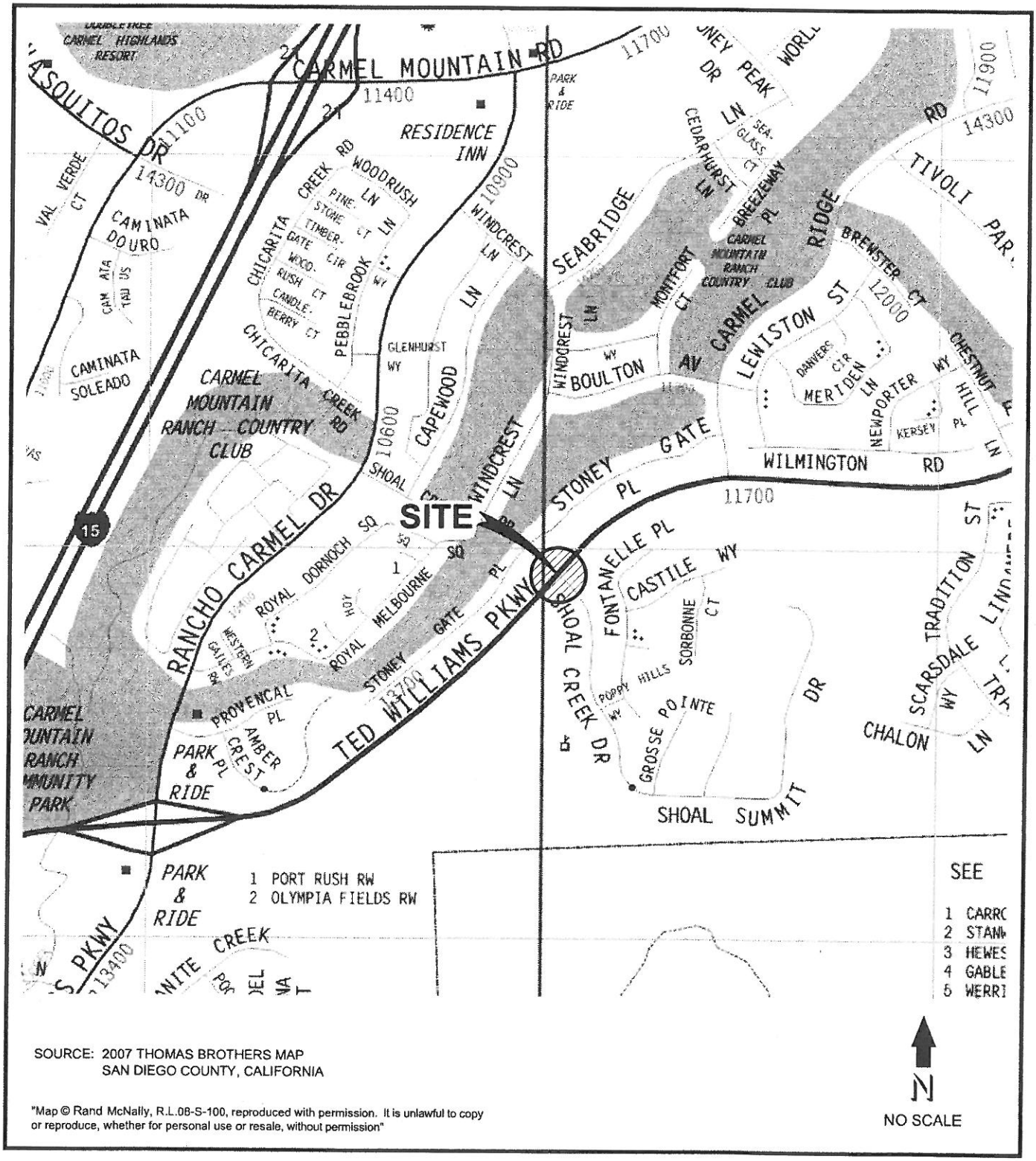

SOURCE: 2007 THOMAS BROTHERS MAP
SAN DIEGO COUNTY, CALIFORNIA

"Map © Rand McNally, R.L.08-S-100, reproduced with permission. It is unlawful to copy or reproduce, whether for personal use or resale, without permission"

GEOCON
INCORPORATED
GEOTECHNICAL CONSULTANTS
6960 FLANDERS DRIVE - SAN DIEGO, CALIFORNIA 92121 - 2974
PHONE 858 558-6900 - FAX 858 558-6159

YW / RA		DSK/GTYPD

VICINITY MAP

TED WILLIAMS PARKWAY
PEDESTRIAN OVERCROSSING AT SHOAL CREEK DRIVE
SAN DIEGO, CALIFORNIA

DATE 03 - 30 - 2009	PROJECT NO. 07926 - 22 - 01	FIG. 1

Vicinity Map

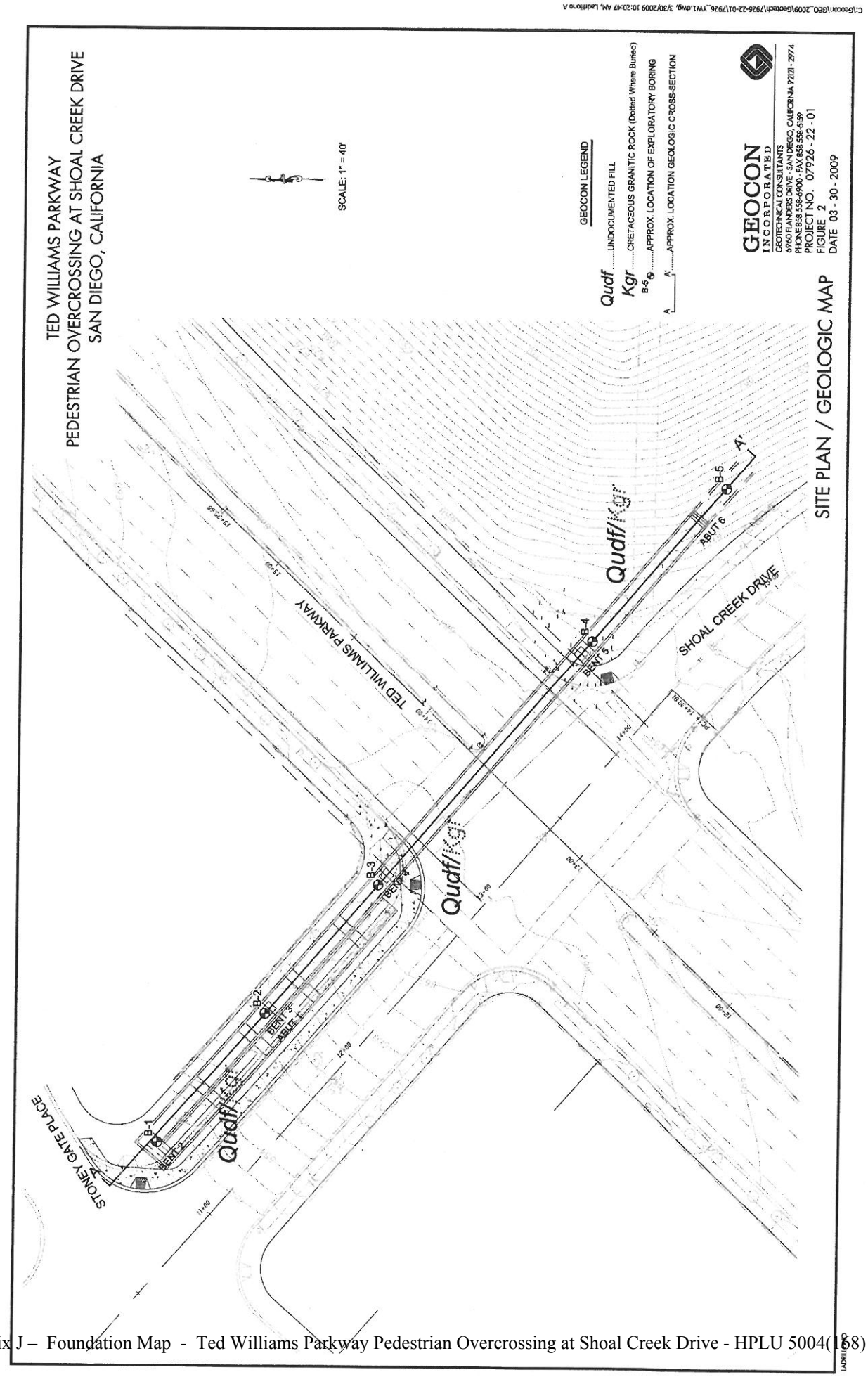
TED WILLIAMS PARKWAY
PEDESTRIAN OVERCROSSING AT SHOAL CREEK DRIVE
SAN DIEGO, CALIFORNIA
SCALE: 1" = 40'
GEOCON LEGEND
Qudf.....UNDOCUMENTED FILL
Kgr.....CRETACEOUS GRANITIC ROCK (Dotted Where Buried)
B-5.....APPROX. LOCATION OF EXPLORATORY BORING
A A'.....APPROX. LOCATION GEOLOGIC CROSS-SECTION
GEOCON
INCORPORATED
GEOTECHNICAL CONSULTANTS
6960 FLANDERS DRIVE - SAN DIEGO, CALIFORNIA 92121 - 2974
PHONE 858 558-6900 - FAX 858 558-6159
PROJECT NO. 07926 - 22 - 01
FIGURE 2
DATE 03 - 30 - 2009
SITE PLAN / GEOLOGIC MAP
TED WILLIAMS PARKWAY
SHOAL CREEK DRIVE
STONEY GATE PLACE
Qudf/Kgr
B-1
B-2
B-3
B-4
B-5
BENT 2
BENT 3
BENT 4
BENT 5
ABUT 1
ABUT 6
A
A'

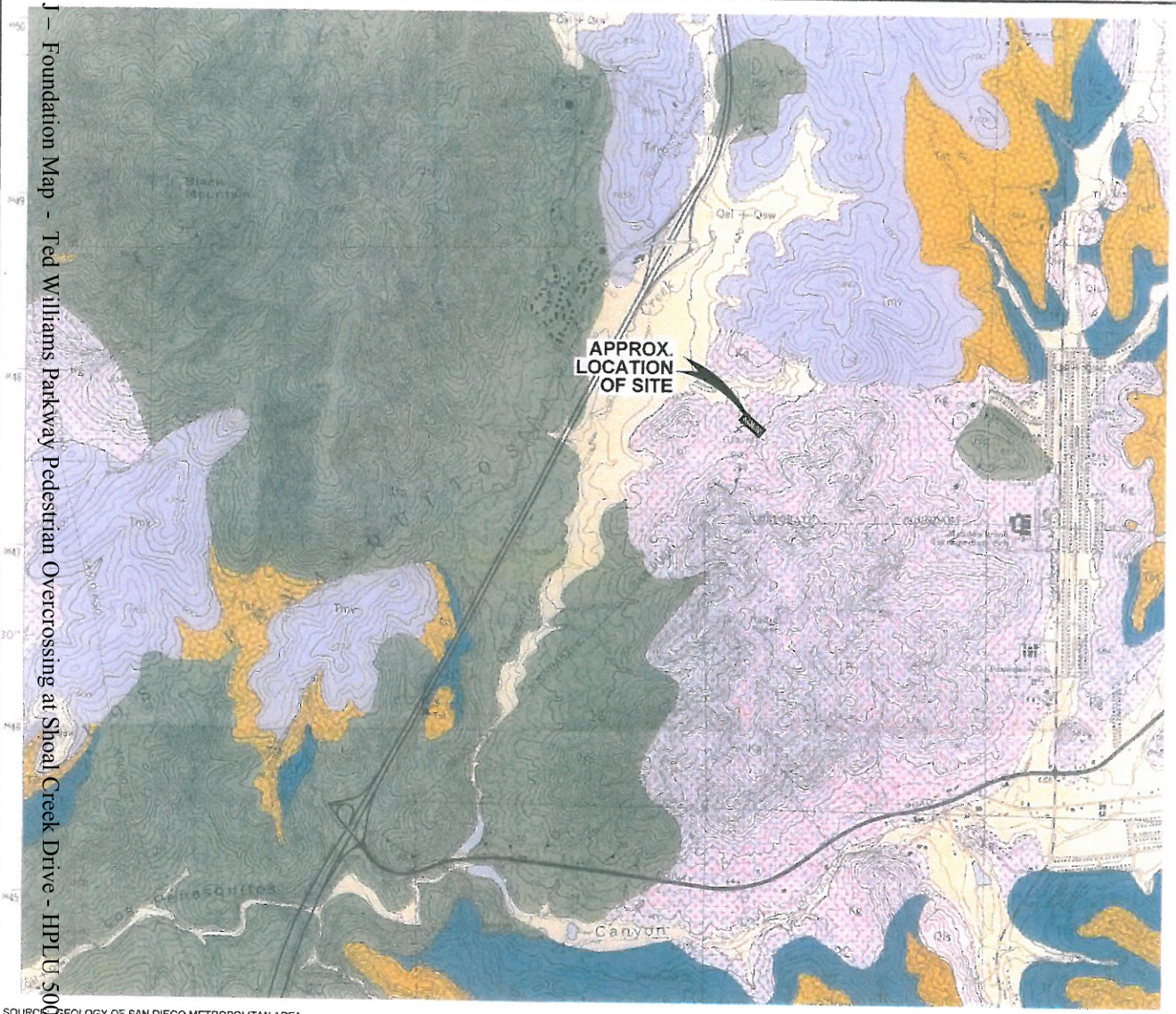

SOURCE: GEOLOGY OF SAN DIEGO METROPOLITAN AREA, CDMG, BULLETIN 200, 1975 (Reprint 2001)

TED WILLIAMS PARKWAY
PEDESTRIAN OVERCROSSING AT SHOAL CREEK DRIVE
SAN DIEGO, CALIFORNIA

EXPLANATION

- QUATERNARY
  - Holocene
    - Qsw / Qal + Qsw — Alluvium and Slopewash
      Qsw, Slopewash; Qal & Qsw, Alluvium and Slopewash undifferentiated.
    - Qls — Landslide deposits
  - Pleistocene
    - Qt — Stream-terrace deposits
    - Ql — Lindavista Formation
- TERTIARY
  - Eocene
    - Tp, Tmv, Tst — Poway Group
      Tp, Pomerado Conglomerate; Tpm, Mirmar Sandstone Tongue of Pomerado Conglomerate; Tmv, Mission Valley Formation, Tst, Stadium Conglomerate.
    - Ti — Friars Formation
- CRETACEOUS
  - Upper Cretaceous
    - Kl — Lusardi Formation
    - Kg — Granite rocks
      Undifferentiated granitic rocks of the southern California batholith.
- JURASSIC
  - Jsp — Santiago Peak Volcanics

N

APPROX. SCALE: 1" = 2,000'

GEOCON
INCORPORATED
GEOTECHNICAL CONSULTANTS
6960 FLANDERS DRIVE - SAN DIEGO, CALIFORNIA 92121 - 2974
PHONE 858 558-6900 - FAX 858 558 6159

PROJECT NO. 07926 - 22 - 01
FIGURE 3
DATE 03 - 30 - 2009

REGIONAL GEOLOGIC MAP

Y:\07926-22-01\RA\YW_7926 REGIONAL GEO MAP.DWG

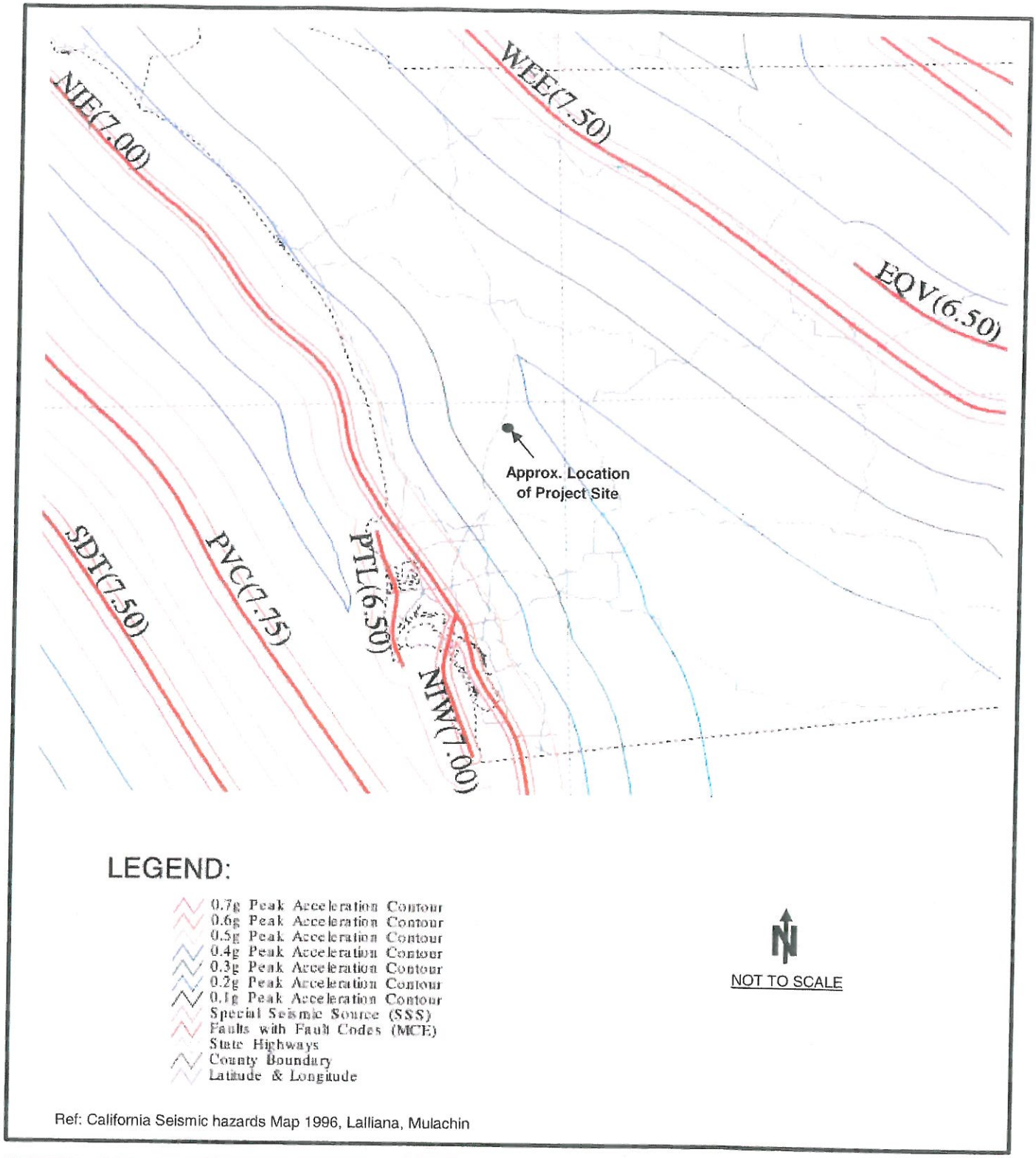

Ref: California Seismic hazards Map 1996, Lalliana, Mulachin

GEOCON
INCORPORATED
GEOTECHNICAL CONSULTANTS
6960 FLANDERS DRIVE - SAN DIEGO, CALIFORNIA 92121-2974
PHONE 858 558-6900 - FAX 858 558-6159

REGIONAL SEISMIC MAP

TED WILLIAMS PARKWAY PEDESTRIAN OVERCROSSING AT SHOAL CREEK DRIVE
SAN DIEGO, CALIFORNIA

DATE 3-30-2009	PROJECT NO. 07926-22-01	FIG. 4

TED WILLIAMS PARKWAY
PEDESTRIAN OVERCROSSING AT SHOAL CREEK DRIVE
SAN DIEGO, CALIFORNIA

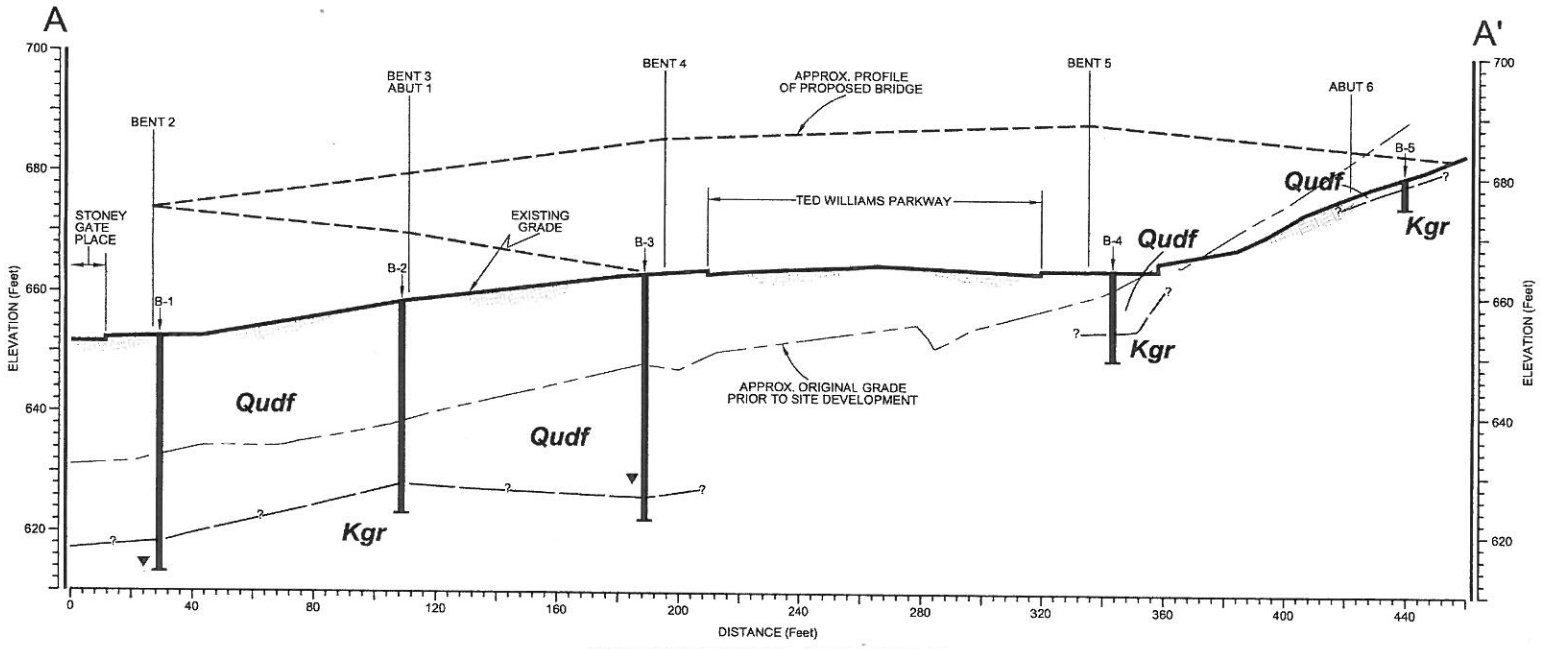

GEOLOGIC CROSS - SECTION A-A'
SCALE: 1" = 40' (Horiz.); 1" = 20' (Vert.)

GEOCON LEGEND

- Qudf ..... UNDOCUMENTED FILL
- Kgr ..... CRETACEOUS GRANITIC ROCK
- B-5 ..... APPROX. LOCATION OF EXPLORATORY BORING
- ?~?~? ..... APPROX. LOCATION OF GEOLOGIC CONTACT (Queried Where Uncertain)
- ▼ ..... APPROX. GROUNDWATER IN BORING

GEOCON
INCORPORATED
GEOTECHNICAL CONSULTANTS
6960 FLANDERS DRIVE - SAN DIEGO, CALIFORNIA 92121 - 2974
PHONE 858 558-6900 - FAX 858 558-6159
PROJECT NO. 07926 - 22 - 01
FIGURE 5
DATE 03 - 30 - 2009

Y:/07926 22-01/RA/YW_7926 X-SECTN.DWG

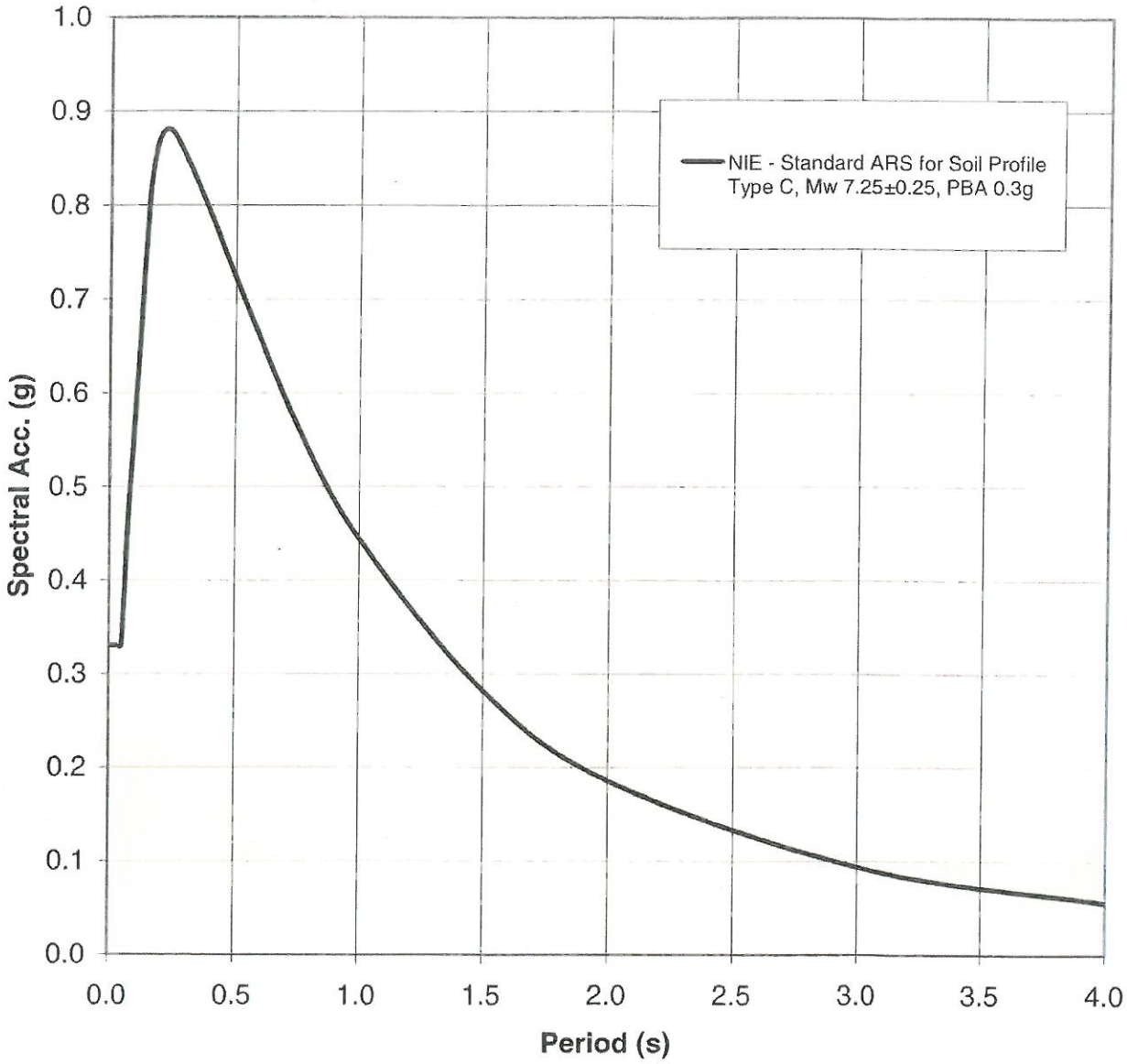

Reference: *Caltrans Seismic Design Criteria, Version 1.4, 2006*

GEOCON
INCORPORATED
GEOTECHNICAL CONSULTANTS
6960 FLANDERS DRIVE - SAN DIEGO, CALIFORNIA 92121-2974
PHONE 858 558-6900 - FAX 858 558-6159

RECOMMENDED ARS CURVE

TED WILLIAMS PARKWAY PEDESTRIAN
OVERCROSSING AT SHOAL CREEK DRIVE
SAN DIEGO, CALIFORNIA

DATE 3-30-2009	PROJECT NO. 07926-22-01	FIG. 6

APPENDIX A

APPENDIX A

FIELD INVESTIGATION

The field investigation was performed on November 25, 2008, and consisted of drilling five exploratory borings at the approximate locations shown on the *Site Plan* and *Geologic Cross-Section A-A'* (Figures 2 and 5) and listed in Table A-I.

TABLE A-I
SUMMARY OF BORINGS

Boring No.	Approximate Boring Location				Boring Depth (feet)
	Alignment	Station No.	Offset (feet)	Elevation (feet)	
B-1	Ted Williams PKWY Pedestrian Overcrossing at Shoal Creek Drive	10+93	0	653	40
B-2	Ted Williams PKWY Pedestrian Overcrossing at Shoal Creek Drive	11+75	0	659	36
B-3	Ted Williams PKWY Pedestrian Overcrossing at Shoal Creek Drive	12+56	0	663	41
B-4	Ted Williams PKWY Pedestrian Overcrossing at Shoal Creek Drive	14+09	0	664	15
B-5	Ted Williams PKWY Pedestrian Overcrossing at Shoal Creek Drive	15+05	0	680	5

Boring B-5 was excavated using hand auger. Borings B-1 through B-4 were advanced to depths ranging from approximately 15 to 41 feet below ground surface using a high torque, CME85 drill rig equipped with hollow-stem augers.

Soil samples were collected from near the ground surface and at approximately 5-foot intervals to the total depths explored. Relatively undisturbed and bulk samples were obtained by driving an approximately 3-inch outside diameter (OD) split-spoon sampler (modified California sampler) into the "undisturbed" soil mass with blows from a 140 pounds hammer falling 30 inches. The sampler was equipped with 6-inch-long by 2½-inch-diameter brass sample tubes to facilitate sample removal and laboratory testing. Standard Penetration Test (SPT) was performed by driving a 2-inch OD split-spoon sampler 18 inches in general accordance with ASTM D1586.

The soil conditions encountered during the field investigation were visually examined, classified and logged in general conformance with the American Society for Testing and Materials (ASTM) *Practice for Description and Identification of Soils* (Visual-Manual Procedure D 2488-00) and the *Soil and*

Rock Logging Classification Manual (Field Guide) produced by the State of California Department of Transportation Engineering Center, Office of Structural Foundations. The logs of the borings drilled are presented here (B-1 through B-5). The logs depict the various soil types encountered and indicate the depths at which samples were obtained. The approximate locations of the borings drilled along the proposed improvements, as well as the boring logs, are depicted on the Log of Test Boring Sheets.

PROJECT NO. 07926-22-01

BORING B 1

ELEV. (MSL.) ~653' DATE COMPLETED 11-25-2008

EQUIPMENT CME85 BY: T. MALLEY

DEPTH IN FEET	SAMPLE NO.	LITHOLOGY	GROUNDWATER	SOIL CLASS (USCS)	MATERIAL DESCRIPTION	PENETRATION RESISTANCE (BLOWS/FT.)	DRY DENSITY (P.C.F.)	MOISTURE CONTENT (%)
0	B1-1			CL	**UNDOCUMENTED FILL** Very stiff, moist, olive brown to brown, Sandy CLAY; trace gravel			
2								
4								
6	B1-2				-Becomes stiff; ~12" diameter rock on side of the hole; pocket of clayey sand	15		
8								
10	B1-3					4		
12					-Becomes wet and soft at 11 feet			
14					-Gravel layer			
16	B1-4				-No recovery at 15 feet	64/6"		
18								
20	B1-5			SM	Dense, moist, light reddish brown to brown, Silty, fine to coarse SAND	32		
22								
24								
26	B1-6				-Becomes medium dense	25		
28								

07926-22-01.GPJ

Figure A-1,
Log of Boring B 1, Page 1 of 2

SAMPLE SYMBOLS

- ... SAMPLING UNSUCCESSFUL
- ... STANDARD PENETRATION TEST
- ... DRIVE SAMPLE (UNDISTURBED)
- ... DISTURBED OR BAG SAMPLE
- ... CHUNK SAMPLE
- ... WATER TABLE OR SEEPAGE

NOTE: THE LOG OF SUBSURFACE CONDITIONS SHOWN HEREON APPLIES ONLY AT THE SPECIFIC BORING OR TRENCH LOCATION AND AT THE DATE INDICATED. IT IS NOT WARRANTED TO BE REPRESENTATIVE OF SUBSURFACE CONDITIONS AT OTHER LOCATIONS AND TIMES.

PROJECT NO. 07926-22-01

BORING B 1

ELEV. (MSL.) ~653' DATE COMPLETED 11-25-2008

EQUIPMENT CME85 BY: T. MALLEY

DEPTH IN FEET	SAMPLE NO.	LITHOLOGY	GROUNDWATER	SOIL CLASS (USCS)	MATERIAL DESCRIPTION	PENETRATION RESISTANCE (BLOWS/FT.)	DRY DENSITY (P.C.F.)	MOISTURE CONTENT (%)
30	B1-7				-Becomes very dense	66	120.2	12.9
32								
34	B1-8					75/11"		
36				SM	**CRETACEOUS GRANITIC ROCK** Decomposed, moderately hard, excavates as dry, brown and black, Silty, fine to coarse SAND; remnant crystalline structure			
38								
40	B1-9		▼		-No recovery	50/2"		
					BORING TERMINATED AT 40 FEET Groundwater encountered at 39.5 feet Backfilled with 14ft³ bentonite slurry			

07926-22-01.GPJ

Figure A-1,
Log of Boring B 1, Page 2 of 2

SAMPLE SYMBOLS

- ☐ ... SAMPLING UNSUCCESSFUL
- ◧ ... STANDARD PENETRATION TEST
- ■ ... DRIVE SAMPLE (UNDISTURBED)
- ⊠ ... DISTURBED OR BAG SAMPLE
- ◪ ... CHUNK SAMPLE
- ▼ ... WATER TABLE OR SEEPAGE

NOTE: THE LOG OF SUBSURFACE CONDITIONS SHOWN HEREON APPLIES ONLY AT THE SPECIFIC BORING OR TRENCH LOCATION AND AT THE DATE INDICATED. IT IS NOT WARRANTED TO BE REPRESENTATIVE OF SUBSURFACE CONDITIONS AT OTHER LOCATIONS AND TIMES.

PROJECT NO. 07926-22-01

BORING B 2

ELEV. (MSL.) ~659' DATE COMPLETED 11-25-2008

EQUIPMENT CME85 BY: T. MALLEY

DEPTH IN FEET	SAMPLE NO.	LITHOLOGY	GROUNDWATER	SOIL CLASS (USCS)	MATERIAL DESCRIPTION	PENETRATION RESISTANCE (BLOWS/FT.)	DRY DENSITY (P.C.F.)	MOISTURE CONTENT (%)
0				CL	**UNDOCUMENTED FILL** Very stiff, moist, light olive brown, Sandy CLAY			
6	B2-1			SM	Loose, moist, brown, Silty, fine to coarse SAND; some gravel	8		
10	B2-2				-Becomes dense	42	125.9	9.4
16	B2-3				-Becomes fine grained	28		
16				CL	Very stiff, moist, brown, Silty CLAY			
20	B2-4			SM	Dense, moist, bluish brown, Silty, fine to coarse SAND	49	128.4	10.0
26	B2-5				-Becomes medium dense, brown to bluish brown, fine to medium grained	27		

07926-22-01.GPJ

Figure A-2,
Log of Boring B 2, Page 1 of 2

SAMPLE SYMBOLS

- ... SAMPLING UNSUCCESSFUL
- ... DISTURBED OR BAG SAMPLE
- ... STANDARD PENETRATION TEST
- ... CHUNK SAMPLE
- ... DRIVE SAMPLE (UNDISTURBED)
- ... WATER TABLE OR SEEPAGE

NOTE: THE LOG OF SUBSURFACE CONDITIONS SHOWN HEREON APPLIES ONLY AT THE SPECIFIC BORING OR TRENCH LOCATION AND AT THE DATE INDICATED. IT IS NOT WARRANTED TO BE REPRESENTATIVE OF SUBSURFACE CONDITIONS AT OTHER LOCATIONS AND TIMES.

PROJECT NO. 07926-22-01

DEPTH IN FEET	SAMPLE NO.	LITHOLOGY	GROUNDWATER	SOIL CLASS (USCS)	BORING B 2 ELEV. (MSL.) ~659' DATE COMPLETED 11-25-2008 EQUIPMENT CME85 BY: T. MALLEY MATERIAL DESCRIPTION	PENETRATION RESISTANCE (BLOWS/FT.)	DRY DENSITY (P.C.F.)	MOISTURE CONTENT (%)
30								
	B2-6					62	135.5	8.0
32				SM	**CRETACEOUS GRANITIC ROCK** Decomposed, moderately hard, excavates as moist, light reddish brown, gray and black, Silty, fine to coarse SAND; remnant crystalline structure			
34								
	B2-7				-Becomes dark gray to black	76/11"		
36					BORING TERMINATED AT 36 FEET No groundwater encountered Backfilled with 12½ ft³ bentonite slurry			

Figure A-2,
Log of Boring B 2, Page 2 of 2

07926-22-01.GPJ

SAMPLE SYMBOLS

- ... SAMPLING UNSUCCESSFUL
- ... STANDARD PENETRATION TEST
- ... DRIVE SAMPLE (UNDISTURBED)
- ... DISTURBED OR BAG SAMPLE
- ... CHUNK SAMPLE
- ... WATER TABLE OR SEEPAGE

NOTE: THE LOG OF SUBSURFACE CONDITIONS SHOWN HEREON APPLIES ONLY AT THE SPECIFIC BORING OR TRENCH LOCATION AND AT THE DATE INDICATED. IT IS NOT WARRANTED TO BE REPRESENTATIVE OF SUBSURFACE CONDITIONS AT OTHER LOCATIONS AND TIMES.

PROJECT NO. 07926-22-01

BORING B 3

ELEV. (MSL.) ~663' DATE COMPLETED 11-25-2008

EQUIPMENT CME85 BY: T. MALLEY

DEPTH IN FEET	SAMPLE NO.	LITHOLOGY	GROUNDWATER	SOIL CLASS (USCS)	MATERIAL DESCRIPTION	PENETRATION RESISTANCE (BLOWS/FT.)	DRY DENSITY (P.C.F.)	MOISTURE CONTENT (%)
0	B3-1			SM	**UNDOCUMENTED FILL** Dense, moist, brown, Silty, fine to coarse SAND; trace gravel			
4				SC	Medium dense, moist, olive brown, Clayey, fine to medium SAND with gravel			
6	B3-2					30	120.9	9.3
10	B3-3					16		
12				CL	Stiff, moist, brown, Sandy CLAY			
16	B3-4			SM	Very dense, moist, brown, Silty, fine to coarse SAND; trace gravel	63	133.4	5.6
20	B3-5				-Becomes medium dense, fine to medium grained; no gravel	12		
26	B3-6				-Becomes dense, dark grayish brown	44	126.1	11.4

Figure A-3,
Log of Boring B 3, Page 1 of 2

07926-22-01.GPJ

SAMPLE SYMBOLS

- ☐ ... SAMPLING UNSUCCESSFUL
- ◧ ... STANDARD PENETRATION TEST
- ■ ... DRIVE SAMPLE (UNDISTURBED)
- ⊠ ... DISTURBED OR BAG SAMPLE
- ◪ ... CHUNK SAMPLE
- ▼ ... WATER TABLE OR SEEPAGE

NOTE: THE LOG OF SUBSURFACE CONDITIONS SHOWN HEREON APPLIES ONLY AT THE SPECIFIC BORING OR TRENCH LOCATION AND AT THE DATE INDICATED. IT IS NOT WARRANTED TO BE REPRESENTATIVE OF SUBSURFACE CONDITIONS AT OTHER LOCATIONS AND TIMES.

PROJECT NO. 07926-22-01

BORING B 3

ELEV. (MSL.) ~663' DATE COMPLETED 11-25-2008

EQUIPMENT CME85 BY: T. MALLEY

DEPTH IN FEET	SAMPLE NO.	LITHOLOGY	GROUNDWATER	SOIL CLASS (USCS)	MATERIAL DESCRIPTION	PENETRATION RESISTANCE (BLOWS/FT.)	DRY DENSITY (P.C.F.)	MOISTURE CONTENT (%)
30	B3-7				-Becomes medium dense, reddish brown to olive brown	21		
32								
34			▼					
36	B3-8				-Becomes wet, dark brown	11	117.8	15.9
38				SM	**CRETACEOUS GRANITIC ROCK** Decomposed, moderately hard, excavates as dry, reddish brown and black, Silty, fine to coarse SAND; remnant crystalline structure			
40	B3-9					90		
					BORING TERMINATED AT 41 FEET Groundwater encountered at 35 feet Backfilled with 14ft³ bentonite slurry			

Figure A-3,
Log of Boring B 3, Page 2 of 2

07926-22-01.GPJ

SAMPLE SYMBOLS

- ☐ ... SAMPLING UNSUCCESSFUL
- ◧ ... STANDARD PENETRATION TEST
- ■ ... DRIVE SAMPLE (UNDISTURBED)
- ⊠ ... DISTURBED OR BAG SAMPLE
- ◪ ... CHUNK SAMPLE
- ▼ ... WATER TABLE OR SEEPAGE

NOTE: THE LOG OF SUBSURFACE CONDITIONS SHOWN HEREON APPLIES ONLY AT THE SPECIFIC BORING OR TRENCH LOCATION AND AT THE DATE INDICATED. IT IS NOT WARRANTED TO BE REPRESENTATIVE OF SUBSURFACE CONDITIONS AT OTHER LOCATIONS AND TIMES.

PROJECT NO. 07926-22-01

BORING B 4

ELEV. (MSL.) ~664' DATE COMPLETED 11-25-2008

EQUIPMENT CME85 BY: T. MALLEY

DEPTH IN FEET	SAMPLE NO.	LITHOLOGY	GROUNDWATER	SOIL CLASS (USCS)	MATERIAL DESCRIPTION	PENETRATION RESISTANCE (BLOWS/FT.)	DRY DENSITY (P.C.F.)	MOISTURE CONTENT (%)
0								
				SM	**UNDOCUMENTED FILL** Loose, moist, dark brown, Silty, fine to coarse SAND			
2								
4								
	B4-1				-Becomes light reddish brown	9		
6								
8								
10				SM	**CRETACEOUS GRANITIC ROCK** Decomposed, moderately hard, excavates as dry, light reddish brown, gray and black, Silty, fine to coarse SAND; remnant crystalline structure			
	B4-2					75/11"	128.0	7.5
12								
14								
	B4-3					50/5"		
					BORING TERMINATED AT 15 FEET No groundwater encountered Backfilled with cuttings and bentonite chips			

Figure A-4,
Log of Boring B 4, Page 1 of 1

07926-22-01.GPJ

SAMPLE SYMBOLS

- ☐ ... SAMPLING UNSUCCESSFUL
- ▥ ... STANDARD PENETRATION TEST
- ■ ... DRIVE SAMPLE (UNDISTURBED)
- ▨ ... DISTURBED OR BAG SAMPLE
- ◥ ... CHUNK SAMPLE
- ▼ ... WATER TABLE OR SEEPAGE

NOTE: THE LOG OF SUBSURFACE CONDITIONS SHOWN HEREON APPLIES ONLY AT THE SPECIFIC BORING OR TRENCH LOCATION AND AT THE DATE INDICATED. IT IS NOT WARRANTED TO BE REPRESENTATIVE OF SUBSURFACE CONDITIONS AT OTHER LOCATIONS AND TIMES.

PROJECT NO. 07926-22-01

DEPTH IN FEET	SAMPLE NO.	LITHOLOGY	GROUNDWATER	SOIL CLASS (USCS)	BORING B 5 ELEV. (MSL.) ~680' DATE COMPLETED 11-25-2008 EQUIPMENT HAND AUGER BY: T. MALLEY	PENETRATION RESISTANCE (BLOWS/FT.)	DRY DENSITY (P.C.F.)	MOISTURE CONTENT (%)
					MATERIAL DESCRIPTION			
0				SM	**UNDOCUMENTED FILL** Medium dense, moist, dark brown, Silty, fine to coarse SAND; some roots			
2	B5-1			SM	**CRETACEOUS GRANITIC ROCK** Decomposed, moderately hard, excavates as moist, light reddish brown, gray and black, Silty, fine to coarse SAND; remnant crystalline structure			
4								
					BORING TERMINATED AT 5 FEET No groundwater encountered Backfilled with cuttings			

Figure A-5,
Log of Boring B 5, Page 1 of 1

07926-22-01.GPJ

SAMPLE SYMBOLS

- ... SAMPLING UNSUCCESSFUL
- ... STANDARD PENETRATION TEST
- ... DRIVE SAMPLE (UNDISTURBED)
- ... DISTURBED OR BAG SAMPLE
- ... CHUNK SAMPLE
- ... WATER TABLE OR SEEPAGE

NOTE: THE LOG OF SUBSURFACE CONDITIONS SHOWN HEREON APPLIES ONLY AT THE SPECIFIC BORING OR TRENCH LOCATION AND AT THE DATE INDICATED. IT IS NOT WARRANTED TO BE REPRESENTATIVE OF SUBSURFACE CONDITIONS AT OTHER LOCATIONS AND TIMES.

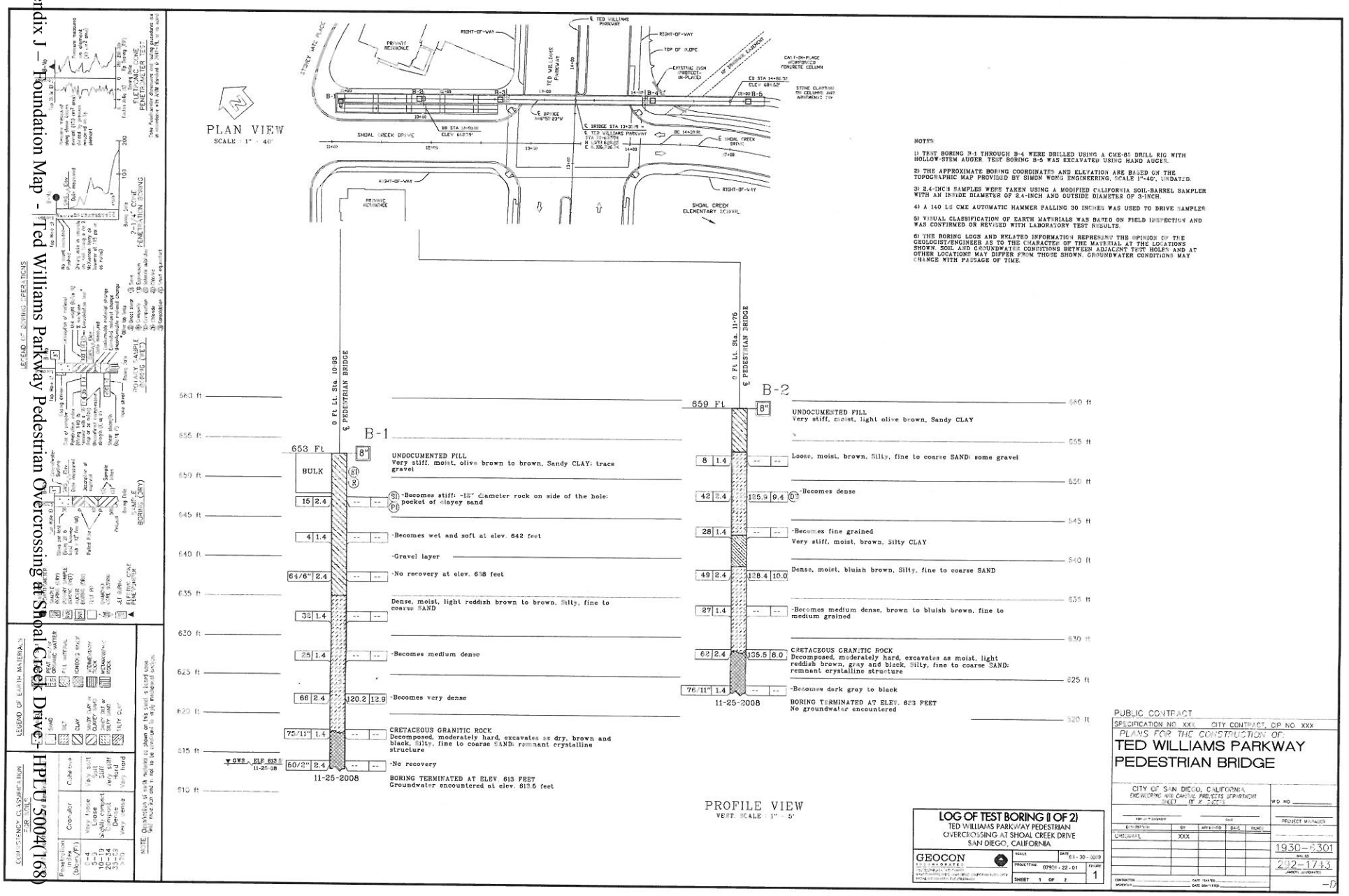
PLAN VIEW
SCALE : 1" = 40'
TED WILLIAMS PARKWAY
SHOAL CREEK DRIVE
SHOAL CREEK ELEMENTARY SCHOOL
RIGHT-OF-WAY
PRIVATE RESIDENCE
B-1
B-2
B-3
B-4
B-5
℄ PEDESTRIAN BRIDGE
0 Ft Lt. Sta. 10+83
0 Ft Lt. Sta. 11+75
B-1
653 Ft
UNDOCUMENTED FILL
Very stiff, moist, olive brown to brown, Sandy CLAY: trace gravel
-Becomes stiff; ~12" diameter rock on side of the hole; pocket of clayey sand
-Becomes wet and soft at elev. 642 feet
-Gravel layer
-No recovery at elev. 638 feet
Dense, moist, light reddish brown to brown, Silty, fine to coarse SAND
-Becomes medium dense
-Becomes very dense
CRETACEOUS GRANITIC ROCK
Decomposed, moderately hard, excavates as dry, brown and black, Silty, fine to coarse SAND; remnant crystalline structure
-No recovery
BORING TERMINATED AT ELEV. 613 FEET
Groundwater encountered at elev. 613.5 feet
11-25-2008
B-2
659 Ft
UNDOCUMENTED FILL
Very stiff, moist, light olive brown, Sandy CLAY
Loose, moist, brown, Silty, fine to coarse SAND; some gravel
-Becomes dense
-Becomes fine grained
Very stiff, moist, brown, Silty CLAY
Dense, moist, bluish brown, Silty, fine to coarse SAND
-Becomes medium dense, brown to bluish brown, fine to medium grained
CRETACEOUS GRANITIC ROCK
Decomposed, moderately hard, excavates as moist, light reddish brown, gray and black, Silty, fine to coarse SAND; remnant crystalline structure
-Becomes dark gray to black
BORING TERMINATED AT ELEV. 623 FEET
No groundwater encountered
11-25-2008
PROFILE VIEW
VERT. SCALE : 1" = 5'
NOTES
1) TEST BORING B-1 THROUGH B-4 WERE DRILLED USING A CME-85 DRILL RIG WITH HOLLOW-STEM AUGER. TEST BORING B-5 WAS EXCAVATED USING HAND AUGER.
2) THE APPROXIMATE BORING COORDINATES AND ELEVATION ARE BASED ON THE TOPOGRAPHIC MAP PROVIDED BY SIMON WONG ENGINEERING, SCALE 1"=40', UNDATED.
3) 2.4-INCH SAMPLES WERE TAKEN USING A MODIFIED CALIFORNIA SOIL-BARREL SAMPLER WITH AN INSIDE DIAMETER OF 2.4-INCH AND OUTSIDE DIAMETER OF 3-INCH.
4) A 140 LB CME AUTOMATIC HAMMER FALLING 30 INCHES WAS USED TO DRIVE SAMPLER.
5) VISUAL CLASSIFICATION OF EARTH MATERIALS WAS BASED ON FIELD INSPECTION AND WAS CONFIRMED OR REVISED WITH LABORATORY TEST RESULTS.
6) THE BORING LOGS AND RELATED INFORMATION REPRESENT THE OPINION OF THE GEOLOGIST/ENGINEER AS TO THE CHARACTER OF THE MATERIAL AT THE LOCATIONS SHOWN. SOIL AND GROUNDWATER CONDITIONS BETWEEN ADJACENT TEST HOLES AND AT OTHER LOCATIONS MAY DIFFER FROM THOSE SHOWN. GROUNDWATER CONDITIONS MAY CHANGE WITH PASSAGE OF TIME.
LEGEND OF BORING OPERATIONS
LEGEND OF EARTH MATERIALS
CONSISTENCY CLASSIFICATION FOR SOILS
NOTE: Definition of each feature on this sheet is listed here. Not all can and will be applicable to any individual exhibit.
LOG OF TEST BORING (1 OF 2)
TED WILLIAMS PARKWAY PEDESTRIAN OVERCROSSING AT SHOAL CREEK DRIVE
SAN DIEGO, CALIFORNIA
GEOCON
PROJECT NO. 07926 - 22 - 01
FIGURE 1
SHEET 1 OF 2
PUBLIC CONTRACT
SPECIFICATION NO. XXX CITY CONTRACT, CIP NO. XXX
PLANS FOR THE CONSTRUCTION OF
TED WILLIAMS PARKWAY PEDESTRIAN BRIDGE
CITY OF SAN DIEGO, CALIFORNIA
ENGINEERING AND CAPITAL PROJECTS DEPARTMENT
SHEET OF X SHEETS
WO NO
PROJECT MANAGER
ORIGINAL XXX
1930-6301
212-1743
PRELIMINARY NOT FOR CONSTRUCTION

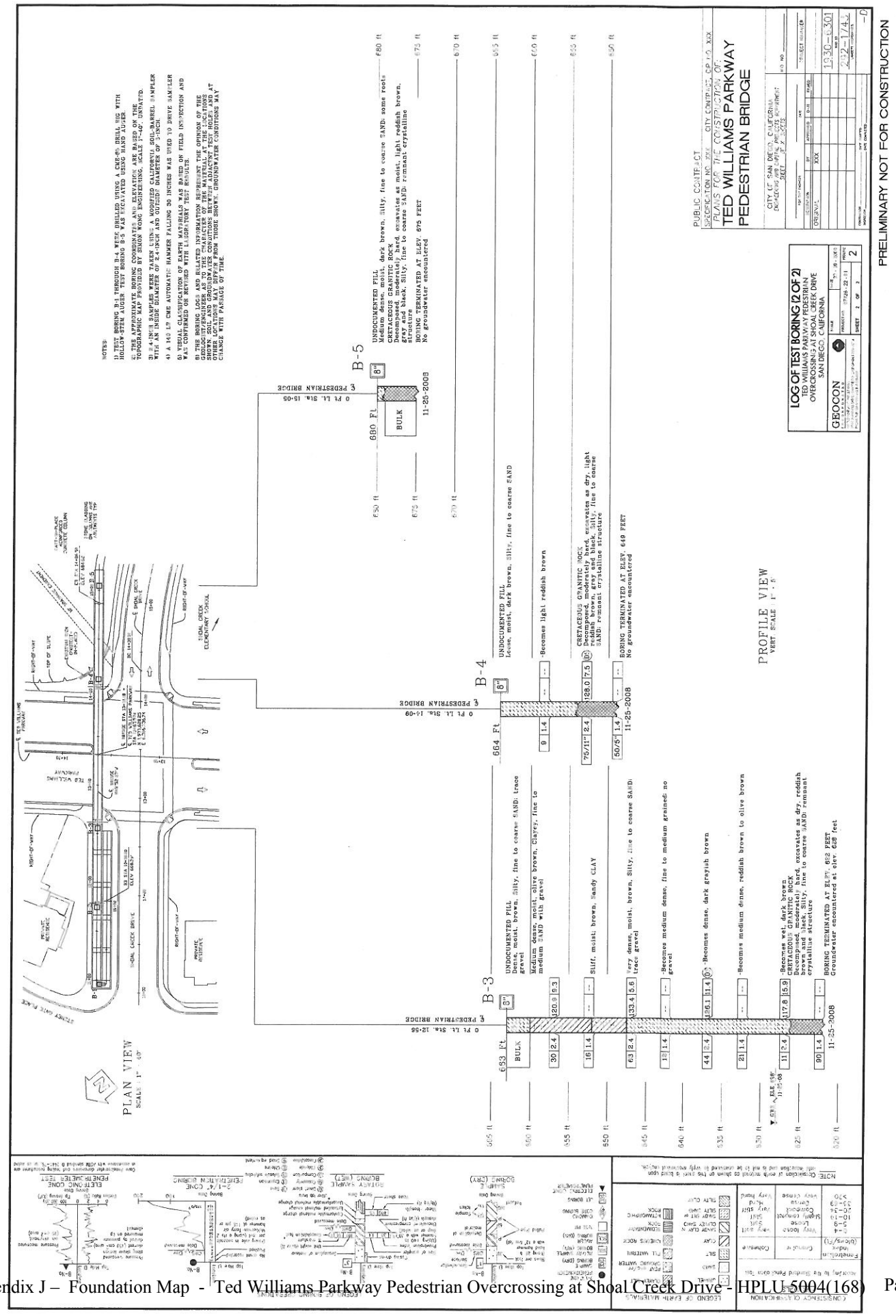
PLAN VIEW
PROFILE VIEW
B-3
B-4
B-5
UNDOCUMENTED FILL
CRETACEOUS GRANITIC ROCK
BORING TERMINATED AT ELEV. 649 FEET
No groundwater encountered
PUBLIC CONTRACT
TED WILLIAMS PARKWAY
PEDESTRIAN BRIDGE
LOG OF TEST BORING (2 OF 2)
TED WILLIAMS PARKWAY PEDESTRIAN OVERCROSSING AT SHOAL CREEK DRIVE
SAN DIEGO, CALIFORNIA
GEOCON
1930-6301
PRELIMINARY NOT FOR CONSTRUCTION

APPENDIX B

APPENDIX B

LABORATORY TESTING

We performed laboratory tests in general accordance with California Test Methods (CTM) and generally accepted test methods of the American Society for Testing and Materials (ASTM). We performed the following tests:

- In-Place Dry Density and Moisture Content: ASTM D2937 (CTM 226) – 9 tests
- Grain Size Distribution/Percent Passing No. 200 Sieve: ASTM D422 (CTM 202 and 203) – 1 test
- Atterberg Limits: ASTM D 4318 – 1 test
- Direct Shear: ASTM D 3080 – 3 tests
- Consolidation: ASTM D 2435-03 (CTM 219) – 1 test
- pH and Resistivity: CTM 643 – 1 test
- Sulfate Content: CTM 417 – 1 test
- Chloride Content: CTM 422 – 1 test

Test results are presented on the following tables and figures. Brief descriptions of the laboratory testing conditions and procedures are presented below:

- *In situ* moisture content and dry density tests were performed on three selected tube samples. Tests were performed in general accordance with ASTM D2937 (CTM 226). Results are presented in Table B-I and on the Logs of Test Borings (LOTBs) in Appendix A.

- Grain size distribution analyses were performed on one collected soil sample in accordance with ASTM D422 (CTM 202 and 203). Tests results are summarized in Table B-II. Grain size distribution curve is depicted on Figure B-1.

- Atterberg Limits tests were performed on one collected soil sample in accordance with ASTM D4318. Test results are summarized in Table B-III.

- Direct shear tests were performed on three selected soil samples in accordance with ASTM D3080-03. Test results are summarized in Table B-IV.

- A one-dimensional consolidation test was performed on one selected soil sample to determine compressive characteristics in accordance with ASTM D2435. Test results are presented on Figure B-2.

- Soil corrosion parameters (pH, resistivity, sulfate and chloride content) tests were performed on two selected soil samples in accordance with CTM 643, 417 and 422. Test results are summarized in Tables B-V, B-VI, and B-VII.

The remaining soil samples are now stored in our laboratory for future reference and analysis if needed. Unless otherwise notified, all samples will be disposed of 30 days from the date of this report.

TABLE B-I
SUMMARY OF LABORATORY *IN SITU* MOISTURE CONTENT AND DRY DENSITY TEST RESULTS (ASTM D 2937/CALIFORNIA TEST METHOD 226)

Boring/Sample No.	Sample Depth (feet)	Dry Density (pcf)	Moisture Content (% dry wt.)
B1-7	30	120.2	12.9
B2-2	10	125.9	9.4
B2-4	20	128.4	10.0
B2-6	30	135.5	8.0
B3-2	5	120.9	9.3
B3-4	15	133.4	5.6
B3-6	25	126.1	11.4
B3-8	35	117.8	15.9
B4-2	10	128.0	7.5

TABLE B-II
SUMMARY OF LABORATORY GRAIN SIZE DISTRIBUTION TEST RESULTS (ASTM D 422)

Boring/ Sample No.	Sample Depth (feet)	% Gravel	% Sand	% fines	USCS Classification
B1-2	5	9.0	54.5	36.5	SC

TABLE B-III
SUMMARY OF LABORATORY ATTERBERG LIMITS TEST RESULTS (ASTM D 4318)

Boring/ Sample No.	Sample Depth (feet)	Liquid Limit	Plastic Limit	Plasticity Index	USCS Classification
B1-2	5	46	21	25	CL

TABLE B-IV
SUMMARY OF LABORATORY DIRECT SHEAR TEST RESULTS
(ASTM D 3080)

Boring/ Sample No.	Sample Depth (feet)	Dry Density (pcf)	Moisture Content (%)	Cohesion (psf)	Angle of Shear Resistance (degrees)
B2-2	10	125.9	9.4	490	39
B3-6	25	126.1	11.4	750	40
B4-2	10	128.0	7.5	660	45

TABLE B-V
SUMMARY OF LABORATORY POTENTIAL OF HYDROGEN (pH) AND RESISTIVITY TEST RESULTS
(CALIFORNIA TEST NO. 643)

Boring/ Sample No.	Sample Depth (feet)	pH	Resistivity (ohm centimeters)
B3-1	1 to 3	7.2	1800

TABLE B-VI
SUMMARY OF LABORATORY WATER-SOLUBLE SULFATE TEST RESULTS
(CALIFORNIA TEST NO. 417)

Boring/Sample No.	Sample Depth (feet)	Water-Soluble Sulfate, ppm (%)
B3-1	0 to 3	100 (0.0100)

TABLE B-VII
SUMMARY OF LABORATORY CHLORIDE CONTENT TEST RESULTS
(CALIFORNIA TEST NO. 422)

Boring/Sample No.	Sample Depth (feet)	Chloride Ion Content, ppm (%)
B3-1	0 to 3	80 (0.0080)

TABLE B-VIII
SUMMARY OF LABORATORY EXPANSION INDEX TEST RESULTS
ASTM D 4829-03

Sample No.	Moisture Content		Dry Density (pcf)	Expansion Index
	Before Test (%)	After Test (%)		
B1-1	10.3	23.8	107.1	46

TABLE B-IX
SUMMARY OF LABORATORY MAXIMUM DRY DENSITY AND OPTIMUM MOISTURE CONTENT TEST RESULTS
ASTM D 1557-02

Sample No.	Description	Maximum Dry Density (pcf)	Optimum Moisture Content (% dry wt.)
B3-1	Gray Brown, Silty SAND, SM	140.9	6.9

TABLE B-X
SUMMARY OF LABORATORY R-VALUE TEST RESULTS
ASTM D2844-01

Sample No.	R-Value
B1-1	12

PROJECT NO. 07926-22-01

GRAVEL		SAND			SILT OR CLAY
COARSE	FINE	COARSE	MEDIUM	FINE	

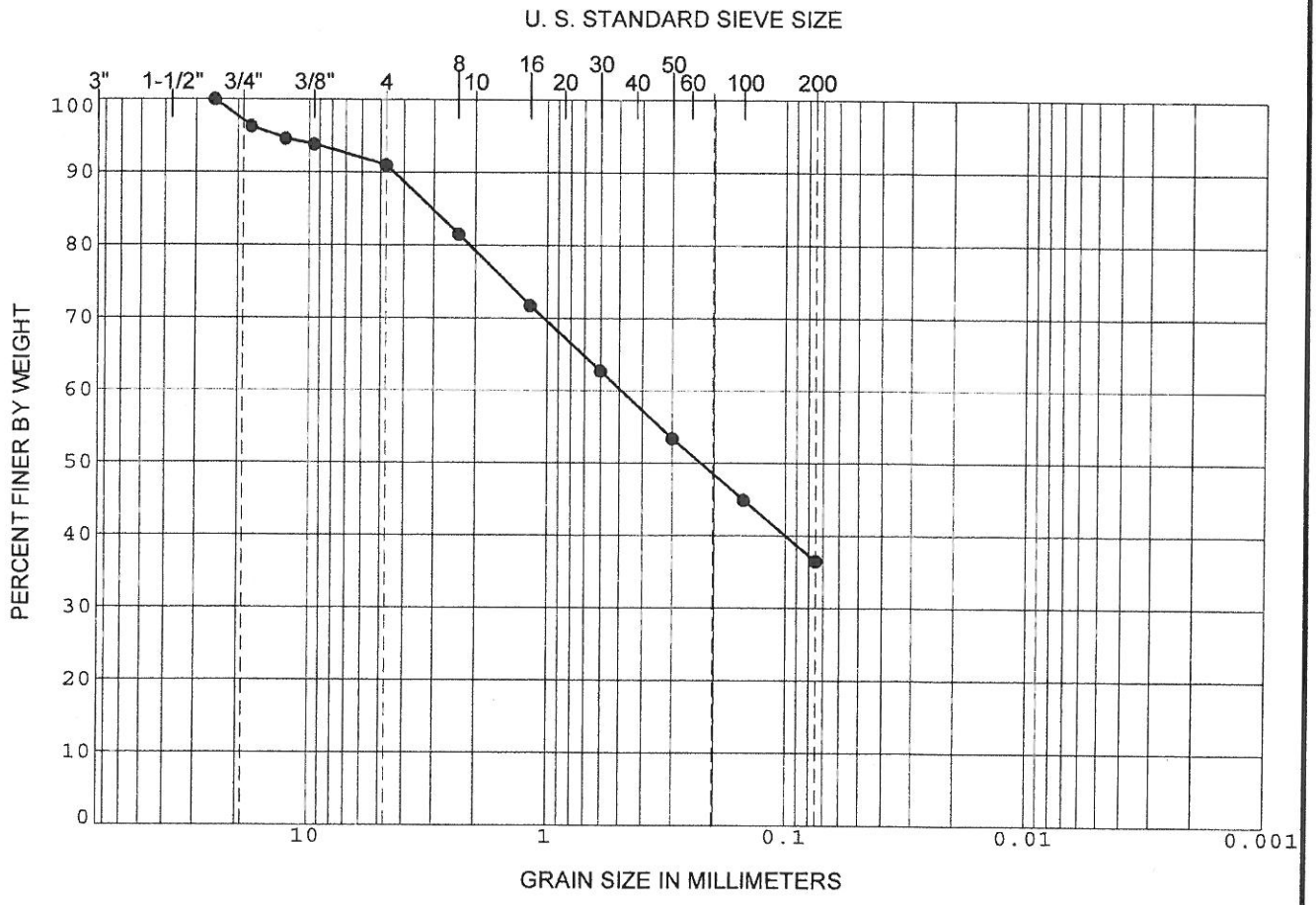

SAMPLE	DEPTH (ft)	CLASSIFICATION	NAT WC	LL	PL	PI
B1-2	5.0	(SC) Clayey SAND		46	21	25

GRADATION CURVE

SHOAL CREEK DRIVE PEDESTRIAN BRIDGE

SAN DIEGO, CALIFORNIA

07926-22-01.GPJ

Figure B-1

GEOCON

PROJECT NO. 07926-22-01

SAMPLE NO. B3-2

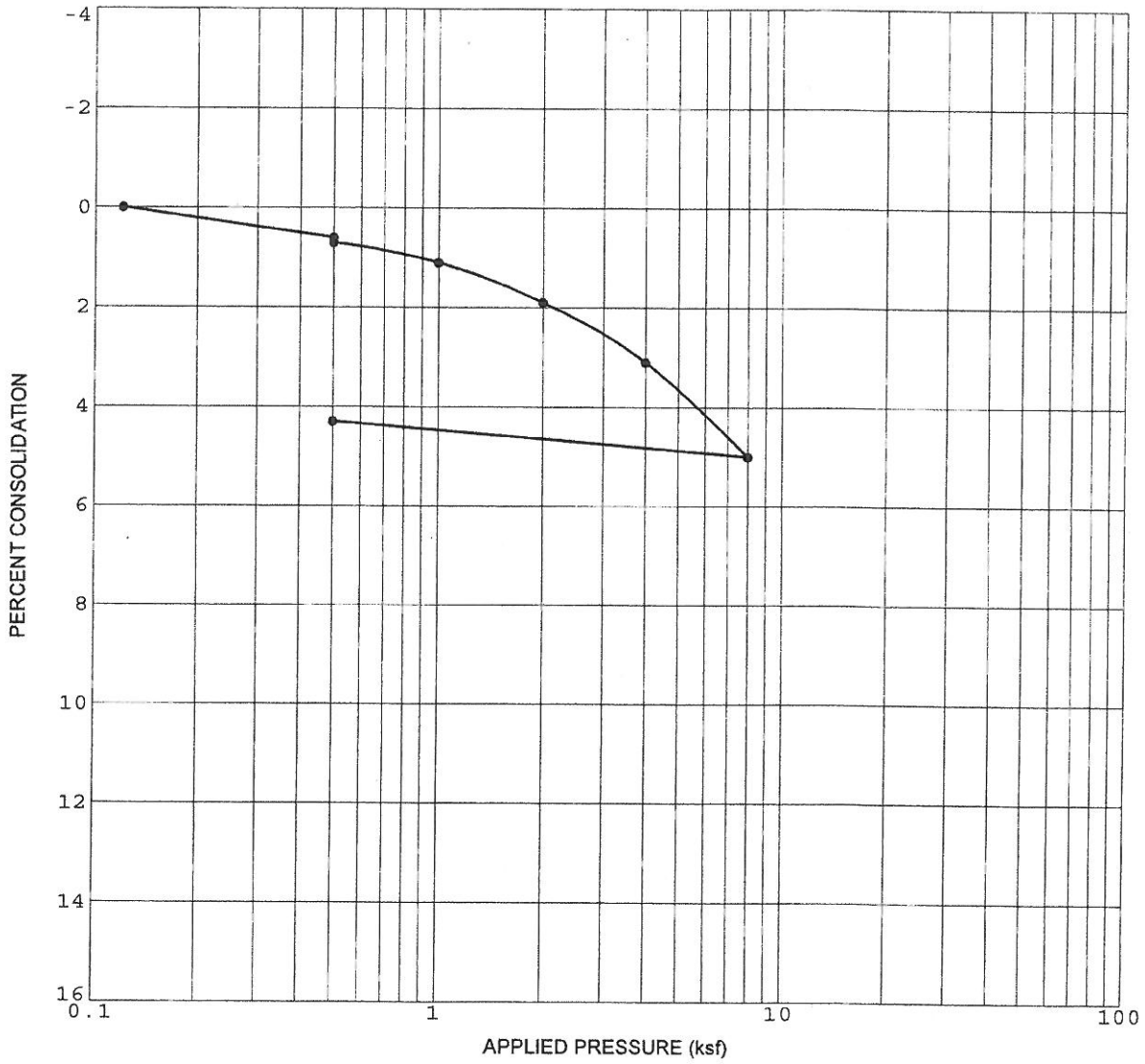

Initial Dry Density (pcf)	120.9
Initial Water Content (%)	9.3

Initial Saturation (%)	66.1
Sample Saturated at (ksf)	.5

CONSOLIDATION CURVE

SHOAL CREEK DRIVE PEDESTRIAN BRIDGE

SAN DIEGO, CALIFORNIA

07926-22-01.GPJ

Figure B-2

APPENDIX C

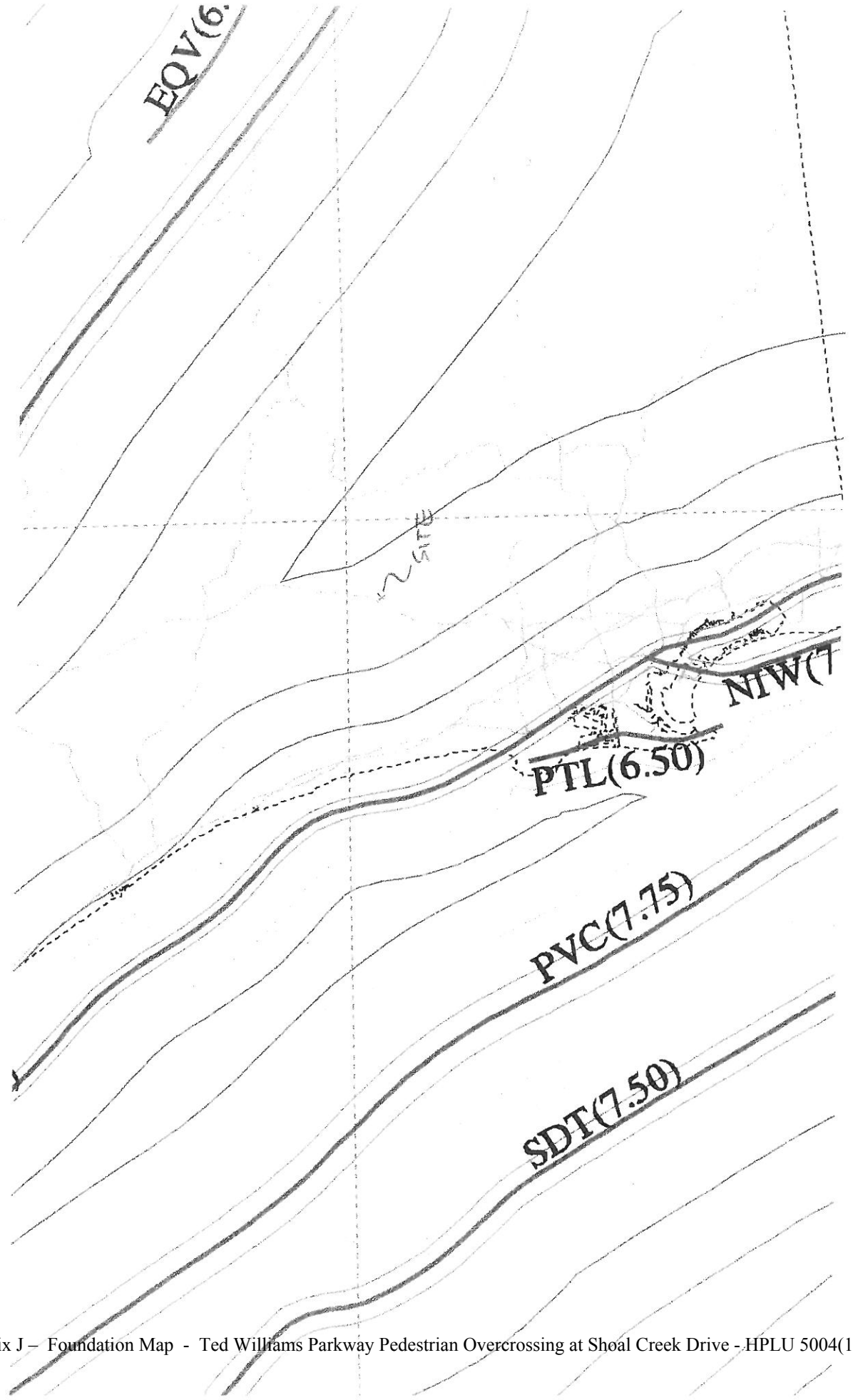
EQV(6.
NTW(7
PTL(6.50)
PVC(7.75)
SDT(7.50)

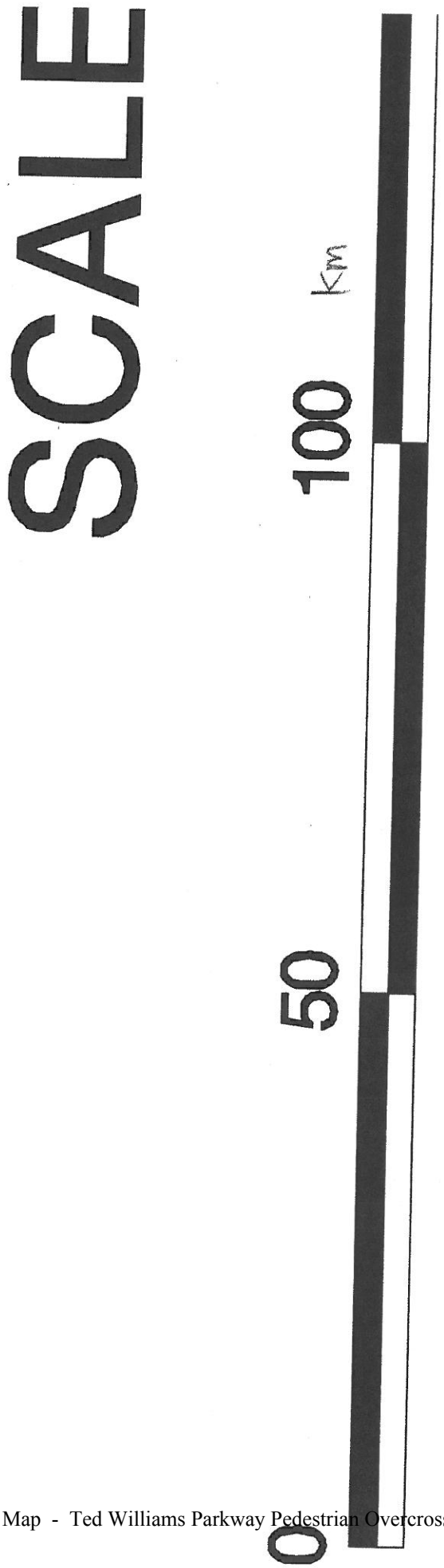
SCALE
0
50
100
Km

TWP Shoal Creek Project No. 07926-22-01

CIDH Calculation Based on AASHTO LRFD

Touma and Reese (1974)

Location	Abut 1	PILE		
Ref Boring	B-2	D, diameter	2	ft
Pile Cap El	657.00	ft	At, base area	3.1 sq ft
GW El	623	ft	S, surface area	6.3 sq ft/ft
GS El	659	ft		
Tot Unit Weight 1	130	pcf		
Tot Unit Weight 2	135	pcf		
Top of Soil 2 El	628	ft		

Soil Profile, Boring GS El 659 ft

Depth ft	Ele ft	γt pcf	γ't pcf	Design Profile, N	ϕ °
0	659	130	130	15	29
10	649	130	130	15	29
10	649	130	130	25	33
25	634	130	130	25	33
25	634	130	130	30	35
31	628	135	135	30	35
31	628	135	135	70	46
40	619	135	72.6	70	46

Depth below Pile Cap ft	Elev ft	γ' pcf	σ' ksf	ϕ °	Side Resistance K	Side Resistance qs tsf	Side Resistance Qs ton	Tip Resistance k	Tip Resistance qp tsf	Tip Resistance Qp ton	Resistance (kips) Nominal Resistance	Resistance (kips) LRFD Factored (ϕ = 0.7)	Resistance (kips) WSD Factored FS = 2.0
0	657	130	0.00	29	0.7	0.0000	0.00	1.00	16.00	50.27	100.53	70.37	50.27
1	656	130	0.13	29	0.7	0.0252	0.16	1.00	16.00	50.27	100.85	70.59	50.42
2	655	130	0.26	29	0.7	0.0504	0.48	1.20	13.33	41.89	84.73	59.31	42.36
3	654	130	0.39	29	0.7	0.0757	0.95	1.20	13.33	41.89	85.68	59.97	42.84
4	653	130	0.52	29	0.7	0.1009	1.58	1.20	13.33	41.89	86.95	60.86	43.47
5	652	130	0.65	29	0.7	0.1261	2.38	1.20	13.33	41.89	88.53	61.97	44.26
6	651	130	0.78	29	0.7	0.1513	3.33	1.20	13.33	41.89	90.43	63.30	45.22
7	650	130	0.91	29	0.7	0.1765	4.44	1.20	13.33	41.89	92.65	64.86	46.33
8	649	130	1.04	29	0.7	0.2018	5.70	1.20	13.33	41.89	95.19	66.63	47.59
9	648	130	1.17	33	0.7	0.2659	7.38	1.20	13.33	41.89	98.53	68.97	49.26
10	647	130	1.30	33	0.7	0.2955	9.23	1.20	13.33	41.89	102.24	71.57	51.12
11	646	130	1.43	33	0.7	0.3250	11.27	1.20	13.33	41.89	106.32	74.43	53.16
12	645	130	1.56	33	0.7	0.3546	13.50	1.20	13.33	41.89	110.78	77.55	55.39
13	644	130	1.69	33	0.7	0.3841	15.92	1.20	13.33	41.89	115.61	80.93	57.80
14	643	130	1.82	33	0.7	0.4137	18.52	1.20	13.33	41.89	120.81	84.56	60.40
15	642	130	1.95	33	0.7	0.4432	21.30	1.20	13.33	41.89	126.38	88.46	63.19
16	641	130	2.08	33	0.7	0.4728	24.27	1.20	13.33	41.89	132.32	92.62	66.16
17	640	130	2.21	33	0.7	0.5023	27.43	1.20	13.33	41.89	138.63	97.04	69.31
18	639	130	2.34	33	0.7	0.5319	30.77	1.20	13.33	41.89	145.31	101.72	72.66
19	638	130	2.47	33	0.7	0.5614	34.30	1.20	13.33	41.89	152.37	106.66	76.18
20	637	130	2.60	33	0.7	0.5910	38.01	1.20	13.33	41.89	159.79	111.86	79.90
21	636	130	2.73	33	0.7	0.6205	41.91	1.20	13.33	41.89	167.59	117.31	83.80
22	635	130	2.86	33	0.7	0.6501	45.99	1.20	13.33	41.89	175.76	123.03	87.88
23	634	130	2.99	33	0.7	0.6796	50.26	1.20	13.33	41.89	184.30	129.01	92.15
24	633	130	3.12	35	0.7	0.7646	55.07	1.20	13.33	41.89	193.91	135.74	96.95
25	632	130	3.25	35	0.7	0.7965	60.07	1.20	13.33	41.89	203.92	142.74	101.96
26	631	130	3.38	35	0.6	0.7100	64.53	1.20	13.33	41.89	212.84	148.99	106.42
27	630	130	3.51	35	0.6	0.7373	69.16	1.20	13.33	41.89	222.11	155.47	111.05
28	629	130	3.64	35	0.6	0.7646	73.97	1.20	13.33	41.89	231.71	162.20	115.86
29	628	135	3.78	35	0.6	0.7930	78.95	1.20	13.33	41.89	241.68	169.18	120.84
30	627	135	3.91	46	0.6	1.2147	86.58	1.20	33.33	104.72	382.61	267.82	191.30
31	626	135	4.05	46	0.6	1.2566	94.48	1.20	33.33	104.72	398.40	278.88	199.20
32	625	135	4.18	46	0.6	1.2986	102.64	1.20	33.33	104.72	414.72	290.30	207.36
33	624	135	4.32	46	0.6	1.3405	111.06	1.20	33.33	104.72	431.56	302.09	215.78
34	623	135	4.45	46	0.6	1.3824	119.75	1.20	33.33	104.72	448.93	314.25	224.47
35	622	72.6	4.52	46	0.6	1.4050	128.57	1.20	33.33	104.72	466.59	326.61	233.29
36	621	72.6	4.60	46	0.6	1.4275	137.54	1.20	33.33	104.72	484.53	339.17	242.26
37	620	72.6	4.67	46	0.6	1.4501	146.66	1.20	33.33	104.72	502.75	351.93	251.38
38	619	72.6	4.74	46	0.6	1.4726	155.91	1.20	33.33	104.72	521.26	364.88	260.63
39	618	72.6	4.81	46	0.6	1.4952	165.30	1.20	33.33	104.72	540.05	378.03	270.02
40	617	72.6	4.89	46	0.6	1.5178	174.84	1.20	33.33	104.72	559.12	391.38	279.56
41	616	72.6	4.96	46	0.5	1.2836	182.90	1.20	33.33	104.72	575.25	402.67	287.62
42	615	72.6	5.03	46	0.5	1.3024	191.09	1.20	33.33	104.72	591.61	414.13	295.81
43	614	72.6	5.10	46	0.5	1.3212	199.39	1.20	33.33	104.72	608.22	425.75	304.11
44	613	72.6	5.18	46	0.5	1.3400	207.81	1.20	33.33	104.72	625.06	437.54	312.53
45	612	72.6	5.25	46	0.5	1.3588	216.35	1.20	33.33	104.72	642.13	449.49	321.07
46	611	72.6	5.32	46	0.5	1.3776	225.00	1.20	33.33	104.72	659.44	461.61	329.72
47	610	72.6	5.39	46	0.5	1.3964	233.77	1.20	33.33	104.72	676.99	473.89	338.49

Note: Design tip elevations may be adjusted to ignore certain portions of embedment at the top and bottom of the piles to account for the effects of seasonal moisture changes, disturbance during construction, cyclic lateral loading, low lateral stresses from freshly placed concrete, and development of tensile cracks in soils and/or rock.

TWP Shoal Creek Project No. 07926-22-01

CIDH Calculation Based on AASHTO LRFD

Touma and Reese (1974)

Location	Bent 2	PILE	
Ref Boring	B-1	D, diameter	2 ft
Pile Cap El	648.00 ft	Ab, base area	3.1 sq ft
GW El	613.5 ft	S, surface area	6.3 sq ft/ft
GS El	653 ft		
Tot Unit Weight 1	130 pcf		
Tot Unit Weight 2	135 pcf		
Top of Soil 2 El	618 ft		

Soil Profile, Boring GS El 653 ft

Depth ft	Ele ft	γt pcf	γ't pcf	Design Profile, N	ϕ °
0	653	130	130	15	29
10	643	130	130	15	29
10	643	130	130	25	33
25	628	130	130	25	33
25	628	130	130	30	35
35	618	135	135	30	35
35	618	135	135	70	46
40	613	135	72.6	70	46

Depth below Pile Cap ft	Elev ft	γ' pcf	σ' ksf	ϕ °	Side Resistance K	qs tsf	Qs ton	Tip Resistance k	qp tsf	Qp ton	Resistance (kips) Nominal Resistance	LRFD Factored (ϕ = 0.7)	WSD Factored FS = 2.0
0	648	130	0.00	29	0.7	0.0000	0.00	1.00	16.00	50.27	100.53	70.37	50.27
1	647	130	0.13	29	0.7	0.0252	0.16	1.00	16.00	50.27	100.85	70.59	50.42
2	646	130	0.26	29	0.7	0.0504	0.48	1.20	13.33	41.89	84.73	59.31	42.36
3	645	130	0.39	29	0.7	0.0757	0.95	1.20	13.33	41.89	85.68	59.97	42.84
4	644	130	0.52	29	0.7	0.1009	1.58	1.20	13.33	41.89	86.95	60.86	43.47
5	643	130	0.65	29	0.7	0.1261	2.36	1.20	13.33	41.89	88.53	61.97	44.26
6	642	130	0.78	33	0.7	0.1773	3.49	1.20	13.33	41.89	90.76	63.53	45.38
7	641	130	0.91	33	0.7	0.2068	4.79	1.20	13.33	41.89	93.36	65.35	46.68
8	640	130	1.04	33	0.7	0.2364	6.28	1.20	13.33	41.89	96.33	67.43	48.16
9	639	130	1.17	33	0.7	0.2659	7.95	1.20	13.33	41.89	99.67	69.77	49.83
10	638	130	1.30	33	0.7	0.2955	9.80	1.20	13.33	41.89	103.38	72.37	51.69
11	637	130	1.43	33	0.7	0.3250	11.85	1.20	13.33	41.89	107.47	75.23	53.73
12	636	130	1.56	33	0.7	0.3546	14.07	1.20	13.33	41.89	111.92	78.35	55.96
13	635	130	1.69	33	0.7	0.3841	16.49	1.20	13.33	41.89	116.75	81.72	58.37
14	634	130	1.82	33	0.7	0.4137	19.09	1.20	13.33	41.89	121.95	85.36	60.97
15	633	130	1.95	33	0.7	0.4432	21.87	1.20	13.33	41.89	127.52	89.26	63.76
16	632	130	2.08	33	0.7	0.4728	24.84	1.20	13.33	41.89	133.46	93.42	66.73
17	631	130	2.21	33	0.7	0.5023	28.00	1.20	13.33	41.89	139.77	97.84	69.89
18	630	130	2.34	33	0.7	0.5319	31.34	1.20	13.33	41.89	146.45	102.52	73.23
19	629	130	2.47	33	0.7	0.5614	34.87	1.20	13.33	41.89	153.51	107.46	76.75
20	628	130	2.60	33	0.7	0.5910	38.58	1.20	13.33	41.89	160.94	112.65	80.47
21	627	130	2.73	35	0.7	0.6690	42.78	1.20	13.33	41.89	169.34	118.54	84.67
22	626	130	2.86	35	0.7	0.7009	47.19	1.20	13.33	41.89	178.15	124.71	89.08
23	625	130	2.99	35	0.7	0.7328	51.79	1.20	13.33	41.89	187.36	131.15	93.68
24	624	130	3.12	35	0.7	0.7646	56.60	1.20	13.33	41.89	196.97	137.88	98.48
25	623	130	3.25	35	0.7	0.7965	61.60	1.20	13.33	41.89	206.98	144.88	103.49
26	622	130	3.38	35	0.6	0.7100	66.06	1.20	13.33	41.89	215.90	151.13	107.95
27	621	130	3.51	35	0.6	0.7373	70.69	1.20	13.33	41.89	225.16	157.62	112.58
28	620	130	3.64	35	0.6	0.7646	75.50	1.20	13.33	41.89	234.77	164.34	117.39
29	619	130	3.77	35	0.6	0.7919	80.47	1.20	13.33	41.89	244.72	171.31	122.36
30	618	135	3.91	35	0.6	0.8203	85.63	1.20	13.33	41.89	255.03	178.52	127.52
31	617	135	4.04	46	0.6	1.2551	93.51	1.20	33.33	104.72	396.47	277.53	198.23
32	616	135	4.18	46	0.6	1.2970	101.66	1.20	33.33	104.72	412.77	288.94	206.38
33	615	135	4.31	46	0.6	1.3389	110.08	1.20	33.33	104.72	429.59	300.71	214.80
34	614	135	4.45	46	0.6	1.3809	118.75	1.20	33.33	104.72	446.95	312.86	223.47
35	613	72.6	4.52	46	0.6	1.4034	127.57	1.20	33.33	104.72	464.58	325.21	232.29
36	612	72.6	4.59	46	0.6	1.4260	136.53	1.20	33.33	104.72	482.50	337.75	241.25
37	611	72.6	4.66	46	0.6	1.4485	145.63	1.20	33.33	104.72	500.70	350.49	250.35
38	610	72.6	4.74	46	0.6	1.4711	154.88	1.20	33.33	104.72	519.19	363.43	259.59
39	609	72.6	4.81	46	0.6	1.4936	164.26	1.20	33.33	104.72	537.96	376.57	268.98
40	608	72.6	4.88	46	0.6	1.5162	173.79	1.20	33.33	104.72	557.01	389.91	278.51
41	607	72.6	4.95	46	0.5	1.2823	181.84	1.20	33.33	104.72	573.13	401.19	286.56
42	606	72.6	5.03	46	0.5	1.3011	190.02	1.20	33.33	104.72	589.48	412.63	294.74
43	605	72.6	5.10	46	0.5	1.3199	198.31	1.20	33.33	104.72	606.06	424.24	303.03
44	604	72.6	5.17	46	0.5	1.3387	206.72	1.20	33.33	104.72	622.89	436.02	311.44
45	603	72.6	5.24	46	0.5	1.3575	215.25	1.20	33.33	104.72	639.94	447.96	319.97
46	602	72.6	5.32	46	0.5	1.3763	223.90	1.20	33.33	104.72	657.24	460.07	328.62
47	601	72.6	5.39	46	0.5	1.3951	232.66	1.20	33.33	104.72	674.77	472.34	337.38

Note: Design tip elevations may be adjusted to ignore certain portions of embedment at the top and bottom of the piles to account for the effects of seasonal moisture changes, disturbance during construction, cyclic lateral loading, low lateral stresses from freshly placed concrete, and development of tensile cracks in soils and/or rock.

TWP Shoal Creek Project No. 07926-22-01

CIDH Calculation Based on AASHTO LRFD

Touma and Reese (1974)

Location	Bent 3		PILE	
Ref Boring	B-2		D, diameter	2 ft
Pile Cap El	655.00	ft	At, base area	3.1 sq ft
GW El	623	ft	S, surface area	6.3 sq ft/ft
GS El	659	ft		
Tot Unit Weight '	130	pcf		
Tot Unit Weight ;	135	pcf		
Top of Soil 2 El	628	ft		

Soil Profile, Boring GS El 659 ft

Depth ft	Ele ft	γ't pcf	γ't pcf	Design Profile, N	ϕ °
0	659	130	130	15	29
10	649	130	130	15	29
10	649	130	130	25	33
25	634	130	130	25	33
25	634	130	130	30	35
31	628	135	135	30	35
31	628	135	135	70	46
40	619	135	72.6	70	46

Depth below Pile Cap ft	Elev ft	γ' pcf	σ' ksf	ϕ °	Side Resistance K	Side Resistance qs tsf	Side Resistance Qs ton	Tip Resistance k	Tip Resistance qp tsf	Tip Resistance Qp ton	Resistance (kips) Nominal Resistance	Resistance (kips) LRFD Factored (ϕ = 0.7)	Resistance (kips) WSD Factored FS = 2.0
0	655	130	0.00	29	0.7	0.0000	0.00	1.00	16.00	50.27	100.53	70.37	50.27
1	654	130	0.13	29	0.7	0.0252	0.16	1.00	16.00	50.27	100.85	70.59	50.42
2	653	130	0.26	29	0.7	0.0504	0.48	1.20	13.33	41.89	84.73	59.31	42.36
3	652	130	0.39	29	0.7	0.0757	0.95	1.20	13.33	41.89	85.68	59.97	42.84
4	651	130	0.52	29	0.7	0.1009	1.58	1.20	13.33	41.89	86.95	60.86	43.47
5	650	130	0.65	29	0.7	0.1261	2.38	1.20	13.33	41.89	88.53	61.97	44.26
6	649	130	0.78	29	0.7	0.1513	3.33	1.20	13.33	41.89	90.43	63.30	45.22
7	648	130	0.91	33	0.7	0.2068	4.63	1.20	13.33	41.89	93.03	65.12	46.52
8	647	130	1.04	33	0.7	0.2364	6.11	1.20	13.33	41.89	96.00	67.20	48.00
9	646	130	1.17	33	0.7	0.2659	7.78	1.20	13.33	41.89	99.34	69.54	49.67
10	645	130	1.30	33	0.7	0.2955	9.64	1.20	13.33	41.89	103.06	72.14	51.53
11	644	130	1.43	33	0.7	0.3250	11.68	1.20	13.33	41.89	107.14	75.00	53.57
12	643	130	1.56	33	0.7	0.3546	13.91	1.20	13.33	41.89	111.60	78.12	55.80
13	642	130	1.69	33	0.7	0.3841	16.32	1.20	13.33	41.89	116.42	81.50	58.21
14	641	130	1.82	33	0.7	0.4137	18.92	1.20	13.33	41.89	121.62	85.14	60.81
15	640	130	1.95	33	0.7	0.4432	21.71	1.20	13.33	41.89	127.19	89.03	63.60
16	639	130	2.08	33	0.7	0.4728	24.68	1.20	13.33	41.89	133.13	93.19	66.57
17	638	130	2.21	33	0.7	0.5023	27.83	1.20	13.33	41.89	139.44	97.61	69.72
18	637	130	2.34	33	0.7	0.5319	31.16	1.20	13.33	41.89	146.13	102.29	73.06
19	636	130	2.47	33	0.7	0.5614	34.70	1.20	13.33	41.89	153.18	107.23	76.59
20	635	130	2.60	33	0.7	0.5910	38.42	1.20	13.33	41.89	160.61	112.43	80.30
21	634	130	2.73	33	0.7	0.6205	42.32	1.20	13.33	41.89	168.41	117.88	84.20
22	633	130	2.86	35	0.7	0.7009	46.72	1.20	13.33	41.89	177.21	124.05	88.61
23	632	130	2.99	35	0.7	0.7328	51.32	1.20	13.33	41.89	186.42	130.50	93.21
24	631	130	3.12	35	0.7	0.7646	56.13	1.20	13.33	41.89	196.03	137.22	98.02
25	630	130	3.25	35	0.7	0.7965	61.13	1.20	13.33	41.89	206.04	144.23	103.02
26	629	130	3.38	35	0.6	0.7100	65.59	1.20	13.33	41.89	214.96	150.47	107.48
27	628	135	3.52	35	0.6	0.7384	70.23	1.20	13.33	41.89	224.24	156.97	112.12
28	627	135	3.65	46	0.6	1.1339	77.36	1.20	33.33	104.72	364.15	254.91	182.08
29	626	135	3.79	46	0.6	1.1758	84.75	1.20	33.33	104.72	378.93	265.25	189.47
30	625	135	3.92	46	0.6	1.2178	92.40	1.20	33.33	104.72	394.23	275.96	197.12
31	624	135	4.06	46	0.6	1.2597	100.31	1.20	33.33	104.72	410.06	287.04	205.03
32	623	135	4.19	46	0.6	1.3017	108.49	1.20	33.33	104.72	426.42	298.49	213.21
33	622	72.6	4.26	46	0.6	1.3242	116.81	1.20	33.33	104.72	443.06	310.14	221.53
34	621	72.6	4.34	46	0.6	1.3468	125.27	1.20	33.33	104.72	459.99	321.99	229.99
35	620	72.6	4.41	46	0.6	1.3693	133.88	1.20	33.33	104.72	477.19	334.03	238.60
36	619	72.6	4.48	46	0.6	1.3919	142.62	1.20	33.33	104.72	494.68	346.28	247.34
37	618	72.6	4.55	46	0.6	1.4144	151.51	1.20	33.33	104.72	512.46	358.72	256.23
38	617	72.6	4.63	46	0.6	1.4370	160.54	1.20	33.33	104.72	530.52	371.36	265.26
39	616	72.6	4.70	46	0.6	1.4595	169.71	1.20	33.33	104.72	548.86	384.20	274.43
40	615	72.6	4.77	46	0.6	1.4821	179.02	1.20	33.33	104.72	567.48	397.24	283.74
41	614	72.6	4.84	46	0.5	1.2539	186.90	1.20	33.33	104.72	583.24	408.27	291.62
42	613	72.6	4.92	46	0.5	1.2727	194.90	1.20	33.33	104.72	599.23	419.46	299.62
43	612	72.6	4.99	46	0.5	1.2915	203.01	1.20	33.33	104.72	615.46	430.82	307.73
44	611	72.6	5.06	46	0.5	1.3103	211.24	1.20	33.33	104.72	631.92	442.35	315.96
45	610	72.6	5.13	46	0.5	1.3291	219.59	1.20	33.33	104.72	648.63	454.04	324.31
46	609	72.6	5.21	46	0.5	1.3478	228.06	1.20	33.33	104.72	665.56	465.89	332.78
47	608	72.6	5.28	46	0.5	1.3666	236.65	1.20	33.33	104.72	682.74	477.92	341.37

Note: Design tip elevations may be adjusted to ignore certain portions of embedment at the top and bottom of the piles to account for the effects of seasonal moisture changes, disturbance during construction, cyclic lateral loading, low lateral stresses from freshly placed concrete, and development of tensile cracks in soils and/or rock.

TWP Shoal Creek Project No. 07926-22-01

CIDH Calculation Based on AASHTO LRFD

Touma and Reese (1974)

Soil Profile, Boring GS El 663 ft

Depth ft	Ele ft	γt pcf	γ't pcf	Design Profile, N	ϕ °
0	663	130	130	15	29
10	653	130	130	15	29
10	653	130	130	25	33
25	638	130	130	25	33
25	638	130	130	30	35
37	626	135	72.6	30	35
37	626	135	72.6	70	46
40	623	135	72.6	70	46

Location	Bent 4		PILE	
Ref Boring	B-3		D, diameter	2 ft
Pile Cap El	660.00	ft	At, base area	3.1 sq ft
GW El	628	ft	S, surface area	6.3 sq ft/ft
GS El	663	ft		
Tot Unit Weight '	130	pcf		
Tot Unit Weight 2	135	pcf		
Top of Soil 2 El	626	ft		

Depth below Pile Cap ft	Elev ft	γ' pcf	σ' ksf	ϕ °	Side Resistance K	Side Resistance qs tsf	Side Resistance Qs ton	Tip Resistance k	Tip Resistance qp tsf	Tip Resistance Qp ton	Resistance (kips) Nominal Resistance	Resistance (kips) LRFD Factored (ϕ = 0.7)	Resistance (kips) WSD Factored FS = 2.0
0	660	130	0.00	29	0.7	0.0000	0.00	1.00	16.00	50.27	100.53	70.37	50.27
1	659	130	0.13	29	0.7	0.0252	0.16	1.00	16.00	50.27	100.85	70.59	50.42
2	658	130	0.26	29	0.7	0.0504	0.48	1.20	13.33	41.89	84.73	59.31	42.36
3	657	130	0.39	29	0.7	0.0757	0.95	1.20	13.33	41.89	85.68	59.97	42.84
4	656	130	0.52	29	0.7	0.1009	1.58	1.20	13.33	41.89	86.95	60.86	43.47
5	655	130	0.65	29	0.7	0.1261	2.36	1.20	13.33	41.89	88.53	61.97	44.26
6	654	130	0.78	29	0.7	0.1513	3.33	1.20	13.33	41.89	90.43	63.30	45.22
7	653	130	0.91	29	0.7	0.1765	4.44	1.20	13.33	41.89	92.65	64.86	46.33
8	652	130	1.04	33	0.7	0.2364	5.92	1.20	13.33	41.89	95.62	66.93	47.81
9	651	130	1.17	33	0.7	0.2659	7.59	1.20	13.33	41.89	98.96	69.27	49.48
10	650	130	1.30	33	0.7	0.2955	9.45	1.20	13.33	41.89	102.68	71.87	51.34
11	649	130	1.43	33	0.7	0.3250	11.49	1.20	13.33	41.89	106.76	74.73	53.38
12	648	130	1.56	33	0.7	0.3546	13.72	1.20	13.33	41.89	111.22	77.85	55.61
13	647	130	1.69	33	0.7	0.3841	16.13	1.20	13.33	41.89	116.04	81.23	58.02
14	646	130	1.82	33	0.7	0.4137	18.73	1.20	13.33	41.89	121.24	84.87	60.62
15	645	130	1.95	33	0.7	0.4432	21.52	1.20	13.33	41.89	126.81	88.77	63.41
16	644	130	2.08	33	0.7	0.4728	24.49	1.20	13.33	41.89	132.75	92.93	66.38
17	643	130	2.21	33	0.7	0.5023	27.64	1.20	13.33	41.89	139.06	97.34	69.53
18	642	130	2.34	33	0.7	0.5319	30.99	1.20	13.33	41.89	145.75	102.02	72.87
19	641	130	2.47	33	0.7	0.5614	34.51	1.20	13.33	41.89	152.80	106.96	76.40
20	640	130	2.60	33	0.7	0.5910	38.23	1.20	13.33	41.89	160.23	112.16	80.11
21	639	130	2.73	33	0.7	0.6205	42.13	1.20	13.33	41.89	168.03	117.62	84.01
22	638	130	2.86	33	0.7	0.6501	46.21	1.20	13.33	41.89	176.20	123.34	88.10
23	637	130	2.99	35	0.7	0.7328	50.81	1.20	13.33	41.89	185.40	129.78	92.70
24	636	130	3.12	35	0.7	0.7646	55.62	1.20	13.33	41.89	195.01	136.51	97.51
25	635	130	3.25	35	0.7	0.7965	60.62	1.20	13.33	41.89	205.02	143.51	102.51
26	634	130	3.38	35	0.6	0.7100	65.08	1.20	13.33	41.89	213.94	149.76	106.97
27	633	130	3.51	35	0.6	0.7373	69.72	1.20	13.33	41.89	223.21	156.25	111.60
28	632	130	3.64	35	0.6	0.7646	74.52	1.20	13.33	41.89	232.82	162.97	116.41
29	631	130	3.77	35	0.6	0.7919	79.50	1.20	13.33	41.89	242.77	169.94	121.38
30	630	130	3.90	35	0.6	0.8192	84.64	1.20	13.33	41.89	253.06	177.14	126.53
31	629	130	4.03	35	0.6	0.8466	89.96	1.20	13.33	41.89	263.70	184.59	131.85
32	628	130	4.16	35	0.6	0.8739	95.45	1.20	13.33	41.89	274.68	192.28	137.34
33	627	72.6	4.23	35	0.6	0.8891	101.04	1.20	13.33	41.89	285.86	200.10	142.93
34	626	72.6	4.31	35	0.6	0.9044	106.72	1.20	13.33	41.89	297.22	208.05	148.61
35	625	72.6	4.38	46	0.6	1.3600	115.27	1.20	33.33	104.72	439.97	307.98	219.99
36	624	72.6	4.45	46	0.6	1.3826	123.95	1.20	33.33	104.72	457.35	320.14	228.67
37	623	72.6	4.52	46	0.6	1.4051	132.78	1.20	33.33	104.72	475.01	332.50	237.50
38	622	72.6	4.60	46	0.6	1.4277	141.75	1.20	33.33	104.72	492.95	345.06	246.47
39	621	72.6	4.67	46	0.6	1.4502	150.87	1.20	33.33	104.72	511.17	357.82	255.58
40	620	72.6	4.74	46	0.6	1.4728	160.12	1.20	33.33	104.72	529.68	370.77	264.84
41	619	72.6	4.81	46	0.5	1.2461	167.95	1.20	33.33	104.72	545.34	381.74	272.67
42	618	72.6	4.89	46	0.5	1.2649	175.90	1.20	33.33	104.72	561.23	392.86	280.62
43	617	72.6	4.96	46	0.5	1.2837	183.96	1.20	33.33	104.72	577.36	404.15	288.68
44	616	72.6	5.03	46	0.5	1.3025	192.15	1.20	33.33	104.72	593.73	415.61	296.87
45	615	72.6	5.10	46	0.5	1 3213	200.45	1.20	33.33	104.72	610.33	427.23	305.17
46	614	72.6	5.18	46	0.5	1.3401	208.87	1.20	33.33	104.72	627.17	439.02	313.59
47	613	72.6	5.25	46	0.5	1.3589	217.41	1.20	33.33	104.72	644.25	450.98	322.13

Note: Design tip elevations may be adjusted to ignore certain portions of embedment at the top and bottom of the piles to account for the effects of seasonal moisture changes, disturbance during construction, cyclic lateral loading, low lateral stresses from freshly placed concrete, and development of tensile cracks in soils and/or rock.

TWP Shoal Creek Project No. 07926-22-01

CIDH Calculation Based on AASHTO LRFD

Touma and Reese (1974)

Location	Abut 1	PILE	
Ref Boring	B-2	D, diameter	5 ft
Pile Cap El	657.00 ft	At, base area	19.6 sq ft
GW El	623 ft	S, surface area	15.7 sq ft/ft
GS El	659 ft		
Tot Unit Weight 1	130 pcf		
Tot Unit Weight 2	135 pcf		
Top of Soil 2 El	628 ft		

Soil Profile, Boring GS El 659 ft

Depth ft	Ele ft	γt pcf	γ't pcf	Design Profile, N	ϕ °
0	659	130	130	15	29
10	649	130	130	15	29
10	649	130	130	25	33
25	634	130	130	25	33
25	634	130	130	30	35
31	628	135	135	30	35
31	628	135	135	70	46
40	619	135	72.6	70	46

Depth below Pile Cap ft	Elev ft	γ' pcf	σ' ksf	ϕ °	Side Resistance K	Side Resistance qs tsf	Side Resistance Qs ton	Tip Resistance k	Tip Resistance qp tsf	Tip Resistance Qp ton	Resistance (kips) Nominal Resistance	Resistance (kips) LRFD Factored (ϕ = 0.7)	Resistance (kips) WSD Factored FS = 2.0
0	657	130	0.00	29	0.7	0.0000	0.00	1.00	16.00	314.16	628.32	439.82	314.16
1	656	130	0.13	29	0.7	0.0252	0.40	1.00	16.00	314.16	629.11	440.38	314.56
2	655	130	0.26	29	0.7	0.0504	1.19	3.00	5.33	104.72	211.82	148.27	105.91
3	654	130	0.39	29	0.7	0.0757	2.38	3.00	5.33	104.72	214.19	149.94	107.10
4	653	130	0.52	29	0.7	0.1009	3.96	3.00	5.33	104.72	217.36	152.15	108.68
5	652	130	0.65	29	0.7	0.1261	5.94	3.00	5.33	104.72	221.32	154.93	110.66
6	651	130	0.78	29	0.7	0.1513	8.32	3.00	5.33	104.72	226.08	158.26	113.04
7	650	130	0.91	29	0.7	0.1765	11.09	3.00	5.33	104.72	231.63	162.14	115.81
8	649	130	1.04	29	0.7	0.2018	14.26	3.00	5.33	104.72	237.96	166.57	118.98
9	648	130	1.17	33	0.7	0.2659	18.44	3.00	5.33	104.72	246.32	172.42	123.16
10	647	130	1.30	33	0.7	0.2955	23.08	3.00	5.33	104.72	255.60	178.92	127.80
11	646	130	1.43	33	0.7	0.3250	28.19	3.00	5.33	104.72	265.81	186.07	132.91
12	645	130	1.56	33	0.7	0.3546	33.76	3.00	5.33	104.72	276.95	193.87	138.48
13	644	130	1.69	33	0.7	0.3841	39.79	3.00	5.33	104.72	289.02	202.31	144.51
14	643	130	1.82	33	0.7	0.4137	46.29	3.00	5.33	104.72	302.02	211.41	151.01
15	642	130	1.95	33	0.7	0.4432	53.25	3.00	5.33	104.72	315.94	221.16	157.97
16	641	130	2.08	33	0.7	0.4728	60.68	3.00	5.33	104.72	330.79	231.55	165.40
17	640	130	2.21	33	0.7	0.5023	68.57	3.00	5.33	104.72	346.57	242.60	173.29
18	639	130	2.34	33	0.7	0.5319	76.92	3.00	5.33	104.72	363.28	254.30	181.64
19	638	130	2.47	33	0.7	0.5614	85.74	3.00	5.33	104.72	380.92	266.64	190.46
20	637	130	2.60	33	0.7	0.5910	95.02	3.00	5.33	104.72	399.48	279.64	199.74
21	636	130	2.73	33	0.7	0.6205	104.77	3.00	5.33	104.72	418.98	293.28	209.49
22	635	130	2.86	33	0.7	0.6501	114.98	3.00	5.33	104.72	439.40	307.58	219.70
23	634	130	2.99	33	0.7	0.6796	125.66	3.00	5.33	104.72	460.75	322.53	230.38
24	633	130	3.12	35	0.7	0.7646	137.67	3.00	5.33	104.72	484.77	339.34	242.39
25	632	130	3.25	35	0.7	0.7965	150.18	3.00	5.33	104.72	509.79	356.86	254.90
26	631	130	3.38	35	0.6	0.7100	161.33	3.00	5.33	104.72	532.10	372.47	266.05
27	630	130	3.51	35	0.6	0.7373	172.91	3.00	5.33	104.72	555.26	388.68	277.63
28	629	130	3.64	35	0.6	0.7646	184.92	3.00	5.33	104.72	579.29	405.50	289.64
29	628	135	3.78	35	0.6	0.7930	197.38	3.00	5.33	104.72	604.20	422.94	302.10
30	627	135	3.91	46	0.6	1.2147	216.46	3.00	13.33	261.80	956.52	669.56	478.26
31	626	135	4.05	46	0.6	1.2566	236.20	3.00	13.33	261.80	995.99	697.20	498.00
32	625	135	4.18	46	0.6	1.2986	256.60	3.00	13.33	261.80	1036.79	725.75	518.40
33	624	135	4.32	46	0.6	1.3405	277.65	3.00	13.33	261.80	1078.90	755.23	539.45
34	623	135	4.45	46	0.6	1.3824	299.37	3.00	13.33	261.80	1122.33	785.63	561.17
35	622	72.6	4.52	46	0.6	1.4050	321.44	3.00	13.33	261.80	1166.47	816.53	583.24
36	621	72.6	4.60	46	0.6	1.4275	343.86	3.00	13.33	261.80	1211.32	847.92	605.66
37	620	72.6	4.67	46	0.6	1.4501	366.64	3.00	13.33	261.80	1256.88	879.81	628.44
38	619	72.6	4.74	46	0.6	1.4726	389.77	3.00	13.33	261.80	1303.14	912.20	651.57
39	618	72.6	4.81	46	0.6	1.4952	413.26	3.00	13.33	261.80	1350.11	945.08	675.06
40	617	72.6	4.89	46	0.6	1.5178	437.10	3.00	13.33	261.80	1397.80	978.46	698.90
41	616	72.6	4.96	46	0.5	1.2836	457.26	3.00	13.33	261.80	1438.12	1006.68	719.06
42	615	72.6	5.03	46	0.5	1.3024	477.72	3.00	13.33	261.80	1479.04	1035.33	739.52
43	614	72.6	5.10	46	0.5	1.3212	498.47	3.00	13.33	261.80	1520.54	1064.38	760.27
44	613	72.6	5.18	46	0.5	1.3400	519.52	3.00	13.33	261.80	1562.64	1093.85	781.32
45	612	72.6	5.25	46	0.5	1.3588	540.86	3.00	13.33	261.80	1605.33	1123.73	802.66
46	611	72.6	5.32	46	0.5	1.3776	562.50	3.00	13.33	261.80	1648.60	1154.02	824.30
47	610	72.6	5.39	46	0.5	1.3964	584.44	3.00	13.33	261.80	1692.47	1184.73	846.24

Note: Design tip elevations may be adjusted to ignore certain portions of embedment at the top and bottom of the piles to account for the effects of seasonal moisture changes, disturbance during construction, cyclic lateral loading, low lateral stresses from freshly placed concrete, and development of tensile cracks in soils and/or rock.

TWP Shoal Creek Project No. 07926-22-01

CIDH Calculation Based on AASHTO LRFD

Touma and Reese (1974)

Location	Bent 2	PILE		
Ref Boring	B-1	D, diameter	5	ft
Pile Cap El	650.00	ft	Ai, base area	19.6 sq ft
GW El	613.5	ft	S, surface area	15.7 sq ft/ft
GS El	653	ft		
Tot Unit Weight '	130	pcf		
Tot Unit Weight 2	135	pcf		
Top of Soil 2 El	618	ft		

Soil Profile, Boring GS El 653 ft

Depth ft	Ele ft	γt pcf	γ't pcf	Design Profile, N	ϕ °
0	653	130	130	15	29
10	643	130	130	15	29
10	643	130	130	25	33
25	628	130	130	25	33
25	628	130	130	30	35
35	618	135	135	30	35
35	618	135	135	70	46
40	613	135	72.6	70	46

Depth below Pile Cap	Elev	γ'	σ'	ϕ	Side Resistance			Tip Resistance			Resistance (kips)		
					K	qs	Qs	k	qp	Qp	Nominal	LRFD Factored	WSD Factored
ft	ft	pcf	ksf	°		tsf	ton		tsf	ton	Resistance	(ϕ = 0.7)	FS = 2.0
0	650	130	0.00	29	0.7	0.0000	0.00	1.00	16.00	314.16	628.32	439.82	314.16
1	649	130	0.13	29	0.7	0.0252	0.40	1.00	16.00	314.16	629.11	440.38	314.56
2	648	130	0.26	29	0.7	0.0504	1.19	3.00	5.33	104.72	211.82	148.27	105.91
3	647	130	0.39	29	0.7	0.0757	2.38	3.00	5.33	104.72	214.19	149.94	107.10
4	646	130	0.52	29	0.7	0.1009	3.96	3.00	5.33	104.72	217.36	152.15	108.68
5	645	130	0.65	29	0.7	0.1261	5.94	3.00	5.33	104.72	221.32	154.93	110.66
6	644	130	0.78	29	0.7	0.1513	8.32	3.00	5.33	104.72	226.08	158.26	113.04
7	643	130	0.91	29	0.7	0.1765	11.09	3.00	5.33	104.72	231.63	162.14	115.81
8	642	130	1.04	33	0.7	0.2364	14.81	3.00	5.33	104.72	239.05	167.34	119.53
9	641	130	1.17	33	0.7	0.2659	18.98	3.00	5.33	104.72	247.41	173.18	123.70
10	640	130	1.30	33	0.7	0.2955	23.62	3.00	5.33	104.72	256.69	179.68	128.34
11	639	130	1.43	33	0.7	0.3250	28.73	3.00	5.33	104.72	266.90	186.83	133.45
12	638	130	1.56	33	0.7	0.3546	34.30	3.00	5.33	104.72	278.04	194.63	139.02
13	637	130	1.69	33	0.7	0.3841	40.33	3.00	5.33	104.72	290.11	203.07	145.05
14	636	130	1.82	33	0.7	0.4137	46.83	3.00	5.33	104.72	303.10	212.17	151.55
15	635	130	1.95	33	0.7	0.4432	53.79	3.00	5.33	104.72	317.03	221.92	158.51
16	634	130	2.08	33	0.7	0.4728	61.22	3.00	5.33	104.72	331.88	232.32	165.94
17	633	130	2.21	33	0.7	0.5023	69.11	3.00	5.33	104.72	347.66	243.36	173.83
18	632	130	2.34	33	0.7	0.5319	77.46	3.00	5.33	104.72	364.37	255.06	182.18
19	631	130	2.47	33	0.7	0.5614	86.28	3.00	5.33	104.72	382.01	267.40	191.00
20	630	130	2.60	33	0.7	0.5910	95.57	3.00	5.33	104.72	400.57	280.40	200.29
21	629	130	2.73	33	0.7	0.6205	105.31	3.00	5.33	104.72	420.07	294.05	210.03
22	628	130	2.86	33	0.7	0.6501	115.52	3.00	5.33	104.72	440.49	308.34	220.24
23	627	130	2.99	35	0.7	0.7328	127.03	3.00	5.33	104.72	463.51	324.46	231.75
24	626	130	3.12	35	0.7	0.7646	139.05	3.00	5.33	104.72	487.53	341.27	243.76
25	625	130	3.25	35	0.7	0.7965	151.56	3.00	5.33	104.72	512.55	358.79	256.28
26	624	130	3.38	35	0.6	0.7100	162.71	3.00	5.33	104.72	534.86	374.40	267.43
27	623	130	3.51	35	0.6	0.7373	174.29	3.00	5.33	104.72	558.02	390.62	279.01
28	622	130	3.64	35	0.6	0.7646	186.30	3.00	5.33	104.72	582.04	407.43	291.02
29	621	130	3.77	35	0.6	0.7919	198.74	3.00	5.33	104.72	606.92	424.85	303.46
30	620	130	3.90	35	0.6	0.8192	211.61	3.00	5.33	104.72	632.66	442.86	316.33
31	619	130	4.03	35	0.6	0.8466	224.91	3.00	5.33	104.72	659.25	461.48	329.63
32	618	135	4.17	35	0.6	0.8749	238.65	3.00	5.33	104.72	686.74	480.72	343.37
33	617	135	4.30	46	0.6	1.3358	259.63	3.00	13.33	261.80	1042.87	730.01	521.43
34	616	135	4.44	46	0.6	1.3778	281.26	3.00	13.33	261.80	1086.15	760.31	543.08
35	615	135	4.57	46	0.6	1.4197	303.58	3.00	13.33	261.80	1130.75	791.53	565.38
36	614	135	4.71	46	0.6	1.4617	326.54	3.00	13.33	261.80	1176.67	823.67	588.34
37	613	72.6	4.78	46	0.6	1.4842	349.85	3.00	13.33	261.80	1223.30	856.31	611.65
38	612	72.6	4.85	46	0.6	1.5068	373.52	3.00	13.33	261.80	1270.64	889.44	635.32
39	611	72.6	4.92	46	0.6	1.5293	397.54	3.00	13.33	261.80	1318.68	923.08	659.34
40	610	72.6	5.00	46	0.6	1.5519	421.92	3.00	13.33	261.80	1367.43	957.20	683.72
41	609	72.6	5.07	46	0.5	1.3120	442.53	3.00	13.33	261.80	1408.65	986.06	704.33
42	608	72.6	5.14	46	0.5	1.3308	463.43	3.00	13.33	261.80	1450.46	1015.32	725.23
43	607	72.6	5.21	46	0.5	1.3496	484.63	3.00	13.33	261.80	1492.86	1045.00	746.43
44	606	72.6	5.29	46	0.5	1.3684	506.13	3.00	13.33	261.80	1535.85	1075.09	767.92
45	605	72.6	5.36	46	0.5	1.3872	527.92	3.00	13.33	261.80	1579.43	1105.60	789.71
46	604	72.6	5.43	46	0.5	1.4060	550.00	3.00	13.33	261.80	1623.60	1136.52	811.80
47	603	72.6	5.50	46	0.5	1.4248	572.38	3.00	13.33	261.80	1668.36	1167.85	834.18

Note: Design tip elevations may be adjusted to ignore certain portions of embedment at the top and bottom of the piles to account for the effects of seasonal moisture changes, disturbance during construction, cyclic lateral loading, low lateral stresses from freshly placed concrete, and development of tensile cracks in soils and/or rock.

TWP Shoal Creek Project No. 07926-22-01

CIDH Calculation Based on AASHTO LRFD

Touma and Reese (1974)

Location	Bent 3	PILE		
Ref Boring	B-2	D, diameter	5	ft
Pile Cap El	657.00	ft	At, base area	19.6 sq ft
GW El	623	ft	S, surface area	15.7 sq ft/ft
GS El	659	ft		
Tot Unit Weight '	130	pcf		
Tot Unit Weight 2	135	pcf		
Top of Soil 2 El	628	ft		

Soil Profile, Boring GS El 659 ft

Depth ft	Ele ft	γt pcf	γ't pcf	Design Profile, N	ϕ °
0	659	130	130	15	29
10	649	130	130	15	29
10	649	130	130	25	33
25	634	130	130	25	33
25	634	130	130	30	35
31	628	135	135	30	35
31	628	135	135	70	46
40	619	135	72.6	70	46

Depth below Pile Cap ft	Elev ft	γ' pcf	σ' ksf	ϕ °	Side Resistance K	Side Resistance qs tsf	Side Resistance Qs ton	Tip Resistance k	Tip Resistance qp tsf	Tip Resistance Qp ton	Resistance (kips) Nominal Resistance	Resistance (kips) LRFD Factored (ϕ = 0.7)	Resistance (kips) WSD Factored FS = 2.0
0	657	130	0.00	29	0.7	0.0000	0.00	1.00	16.00	314.16	628.32	439.82	314.16
1	656	130	0.13	29	0.7	0.0252	0.40	1.00	16.00	314.16	629.11	440.38	314.56
2	655	130	0.26	29	0.7	0.0504	1.19	3.00	5.33	104.72	211.82	148.27	105.91
3	654	130	0.39	29	0.7	0.0757	2.38	3.00	5.33	104.72	214.19	149.94	107.10
4	653	130	0.52	29	0.7	0.1009	3.96	3.00	5.33	104.72	217.36	152.15	108.68
5	652	130	0.65	29	0.7	0.1261	5.94	3.00	5.33	104.72	221.32	154.93	110.66
6	651	130	0.78	29	0.7	0.1513	8.32	3.00	5.33	104.72	226.08	158.26	113.04
7	650	130	0.91	29	0.7	0.1765	11.09	3.00	5.33	104.72	231.63	162.14	115.81
8	649	130	1.04	29	0.7	0.2018	14.26	3.00	5.33	104.72	237.96	166.57	118.98
9	648	130	1.17	33	0.7	0.2659	18.44	3.00	5.33	104.72	246.32	172.42	123.16
10	647	130	1.30	33	0.7	0.2955	23.08	3.00	5.33	104.72	255.60	178.92	127.80
11	646	130	1.43	33	0.7	0.3250	28.19	3.00	5.33	104.72	265.81	186.07	132.91
12	645	130	1.56	33	0.7	0.3546	33.76	3.00	5.33	104.72	276.95	193.87	138.48
13	644	130	1.69	33	0.7	0.3841	39.79	3.00	5.33	104.72	289.02	202.31	144.51
14	643	130	1.82	33	0.7	0.4137	46.29	3.00	5.33	104.72	302.02	211.41	151.01
15	642	130	1.95	33	0.7	0.4432	53.25	3.00	5.33	104.72	315.94	221.16	157.97
16	641	130	2.08	33	0.7	0.4728	60.68	3.00	5.33	104.72	330.79	231.55	165.40
17	640	130	2.21	33	0.7	0.5023	68.57	3.00	5.33	104.72	346.57	242.60	173.29
18	639	130	2.34	33	0.7	0.5319	76.92	3.00	5.33	104.72	363.28	254.30	181.64
19	638	130	2.47	33	0.7	0.5614	85.74	3.00	5.33	104.72	380.92	266.64	190.46
20	637	130	2.60	33	0.7	0.5910	95.02	3.00	5.33	104.72	399.48	279.64	199.74
21	636	130	2.73	33	0.7	0.6205	104.77	3.00	5.33	104.72	418.98	293.28	209.49
22	635	130	2.86	33	0.7	0.6501	114.98	3.00	5.33	104.72	439.40	307.58	219.70
23	634	130	2.99	33	0.7	0.6796	125.66	3.00	5.33	104.72	460.75	322.53	230.38
24	633	130	3.12	35	0.7	0.7646	137.67	3.00	5.33	104.72	484.77	339.34	242.39
25	632	130	3.25	35	0.7	0.7965	150.18	3.00	5.33	104.72	509.79	356.86	254.90
26	631	130	3.38	35	0.6	0.7100	161.33	3.00	5.33	104.72	532.10	372.47	266.05
27	630	130	3.51	35	0.6	0.7373	172.91	3.00	5.33	104.72	555.26	388.68	277.63
28	629	130	3.64	35	0.6	0.7646	184.92	3.00	5.33	104.72	579.29	405.50	289.64
29	628	135	3.78	35	0.6	0.7930	197.38	3.00	5.33	104.72	604.20	422.94	302.10
30	627	135	3.91	46	0.6	1.2147	216.46	3.00	13.33	261.80	956.52	669.56	478.26
31	626	135	4.05	46	0.6	1.2566	236.20	3.00	13.33	261.80	995.99	697.20	498.00
32	625	135	4.18	46	0.6	1.2986	256.60	3.00	13.33	261.80	1036.79	725.75	518.40
33	624	135	4.32	46	0.6	1.3405	277.65	3.00	13.33	261.80	1078.90	755.23	539.45
34	623	135	4.45	46	0.6	1.3824	299.37	3.00	13.33	261.80	1122.33	785.63	561.17
35	622	72.6	4.52	46	0.6	1.4050	321.44	3.00	13.33	261.80	1166.47	816.53	583.24
36	621	72.6	4.60	46	0.6	1.4275	343.86	3.00	13.33	261.80	1211.32	847.92	605.66
37	620	72.6	4.67	46	0.6	1.4501	366.64	3.00	13.33	261.80	1256.88	879.81	628.44
38	619	72.6	4.74	46	0.6	1.4726	389.77	3.00	13.33	261.80	1303.14	912.20	651.57
39	618	72.6	4.81	46	0.6	1.4952	413.26	3.00	13.33	261.80	1350.11	945.08	675.06
40	617	72.6	4.89	46	0.6	1.5178	437.10	3.00	13.33	261.80	1397.80	978.46	698.90
41	616	72.6	4.96	46	0.5	1.2836	457.26	3.00	13.33	261.80	1438.12	1006.68	719.06
42	615	72.6	5.03	46	0.5	1.3024	477.72	3.00	13.33	261.80	1479.04	1035.33	739.52
43	614	72.6	5.10	46	0.5	1.3212	498.47	3.00	13.33	261.80	1520.54	1064.38	760.27
44	613	72.6	5.18	46	0.5	1.3400	519.52	3.00	13.33	261.80	1562.64	1093.85	781.32
45	612	72.6	5.25	46	0.5	1.3588	540.86	3.00	13.33	261.80	1605.33	1123.73	802.66
46	611	72.6	5.32	46	0.5	1.3776	562.50	3.00	13.33	261.80	1648.60	1154.02	824.30
47	610	72.6	5.39	46	0.5	1.3964	584.44	3.00	13.33	261.80	1692.47	1184.73	846.24

Note: Design tip elevations may be adjusted to ignore certain portions of embedment at the top and bottom of the piles to account for the effects of seasonal moisture changes, disturbance during construction, cyclic lateral loading, low lateral stresses from freshly placed concrete, and development of tensile cracks in soils and/or rock.

TWP Shoal Creek Project No. 07926-22-01

CIDH Calculation Based on AASHTO LRFD

Touma and Reese (1974)

Location	Bent 4		PILE	
Ref Boring	B-3		D, diameter	5 ft
Pile Cap El	662.00	ft	At, base area	19.6 sq ft
GW El	628	ft	S, surface area	15.7 sq ft/ft
GS El	663	ft		
Tot Unit Weight 1	130	pcf		
Tot Unit Weight 2	135	pcf		
Top of Soil 2 El	626	ft		

Soil Profile, Boring GS El 663 ft

Depth ft	Ele ft	γt pcf	γ't pcf	Design Profile, N	ϕ °
0	663	130	130	15	29
10	653	130	130	15	29
10	653	130	130	25	33
25	638	130	130	25	33
25	638	130	130	30	35
37	626	135	72.6	30	35
37	626	135	72.6	70	46
40	623	135	72.6	70	46

Depth below Pile Cap	Elev	γ'	σ'	ϕ	Side Resistance			Tip Resistance			Resistance (kips)		
					K	qs	Qs	k	qp	Qp	Nominal	LRFD Factored	WSD Factored
ft	ft	pcf	ksf	°		tsf	ton		tsf	ton	Resistance	(ϕ = 0.7)	FS = 2.0
0	662	130	0.00	29	0.7	0.0000	0.00	1.00	16.00	314.16	628.32	439.82	314.16
1	661	130	0.13	29	0.7	0.0252	0.40	1.00	16.00	314.16	629.11	440.38	314.56
2	660	130	0.26	29	0.7	0.0504	1.19	3.00	5.33	104.72	211.82	148.27	105.91
3	659	130	0.39	29	0.7	0.0757	2.38	3.00	5.33	104.72	214.19	149.94	107.10
4	658	130	0.52	29	0.7	0.1009	3.96	3.00	5.33	104.72	217.36	152.15	108.68
5	657	130	0.65	29	0.7	0.1261	5.94	3.00	5.33	104.72	221.32	154.93	110.66
6	656	130	0.78	29	0.7	0.1513	8.32	3.00	5.33	104.72	226.08	158.26	113.04
7	655	130	0.91	29	0.7	0.1765	11.09	3.00	5.33	104.72	231.63	162.14	115.81
8	654	130	1.04	29	0.7	0.2018	14.26	3.00	5.33	104.72	237.96	166.57	118.98
9	653	130	1.17	29	0.7	0.2270	17.83	3.00	5.33	104.72	245.09	171.57	122.55
10	652	130	1.30	33	0.7	0.2955	22.47	3.00	5.33	104.72	254.38	178.06	127.19
11	651	130	1.43	33	0.7	0.3250	27.57	3.00	5.33	104.72	264.59	185.21	132.29
12	650	130	1.56	33	0.7	0.3546	33.14	3.00	5.33	104.72	275.73	193.01	137.86
13	649	130	1.69	33	0.7	0.3841	39.18	3.00	5.33	104.72	287.80	201.46	143.90
14	648	130	1.82	33	0.7	0.4137	45.68	3.00	5.33	104.72	300.79	210.55	150.40
15	647	130	1.95	33	0.7	0.4432	52.64	3.00	5.33	104.72	314.72	220.30	157.36
16	646	130	2.08	33	0.7	0.4728	60.06	3.00	5.33	104.72	329.57	230.70	164.78
17	645	130	2.21	33	0.7	0.5023	67.95	3.00	5.33	104.72	345.35	241.74	172.67
18	644	130	2.34	33	0.7	0.5319	76.31	3.00	5.33	104.72	362.06	253.44	181.03
19	643	130	2.47	33	0.7	0.5614	85.13	3.00	5.33	104.72	379.70	265.79	189.85
20	642	130	2.60	33	0.7	0.5910	94.41	3.00	5.33	104.72	398.26	278.78	199.13
21	641	130	2.73	33	0.7	0.6205	104.16	3.00	5.33	104.72	417.75	292.43	208.88
22	640	130	2.86	33	0.7	0.6501	114.37	3.00	5.33	104.72	438.18	306.72	219.09
23	639	130	2.99	33	0.7	0.6796	125.04	3.00	5.33	104.72	459.53	321.67	229.76
24	638	130	3.12	33	0.7	0.7092	136.18	3.00	5.33	104.72	481.81	337.26	240.90
25	637	130	3.25	35	0.7	0.7965	148.69	3.00	5.33	104.72	506.83	354.78	253.41
26	636	130	3.38	35	0.6	0.7100	159.85	3.00	5.33	104.72	529.13	370.39	264.57
27	635	130	3.51	35	0.6	0.7373	171.43	3.00	5.33	104.72	552.30	386.61	276.15
28	634	130	3.64	35	0.6	0.7646	183.44	3.00	5.33	104.72	576.32	403.42	288.16
29	633	130	3.77	35	0.6	0.7919	195.88	3.00	5.33	104.72	601.20	420.84	300.60
30	632	130	3.90	35	0.6	0.8192	208.75	3.00	5.33	104.72	626.94	438.86	313.47
31	631	130	4.03	35	0.6	0.8466	222.05	3.00	5.33	104.72	653.53	457.47	326.77
32	630	130	4.16	35	0.6	0.8739	235.77	3.00	5.33	104.72	680.98	476.69	340.49
33	629	130	4.29	35	0.6	0.9012	249.93	3.00	5.33	104.72	709.30	496.51	354.65
34	628	130	4.42	35	0.6	0.9285	264.51	3.00	5.33	104.72	738.46	516.92	369.23
35	627	72.6	4.49	35	0.6	0.9437	279.34	3.00	5.33	104.72	768.11	537.68	384.06
36	626	72.6	4.57	35	0.6	0.9590	294.40	3.00	5.33	104.72	798.24	558.77	399.12
37	625	72.6	4.64	46	0.6	1.4408	317.03	3.00	13.33	261.80	1157.66	810.36	578.83
38	624	72.6	4.71	46	0.6	1.4633	340.02	3.00	13.33	261.80	1203.63	842.54	601.82
39	623	72.6	4.78	46	0.6	1.4859	363.36	3.00	13.33	261.80	1250.31	875.22	625.16
40	622	72.6	4.86	46	0.6	1.5084	387.05	3.00	13.33	261.80	1297.70	908.39	648.85
41	621	72.6	4.93	46	0.5	1.2758	407.09	3.00	13.33	261.80	1337.78	936.45	668.89
42	620	72.6	5.00	46	0.5	1.2946	427.43	3.00	13.33	261.80	1378.46	964.92	689.23
43	619	72.6	5.07	46	0.5	1.3134	448.06	3.00	13.33	261.80	1419.72	993.80	709.86
44	618	72.6	5.15	46	0.5	1.3322	468.99	3.00	13.33	261.80	1461.57	1023.10	730.79
45	617	72.6	5.22	46	0.5	1.3510	490.21	3.00	13.33	261.80	1504.01	1052.81	752.01
46	616	72.6	5.29	46	0.5	1.3698	511.72	3.00	13.33	261.80	1547.05	1082.93	773.52
47	615	72.6	5.36	46	0.5	1.3886	533.54	3.00	13.33	261.80	1590.67	1113.47	795.34

Note: Design tip elevations may be adjusted to ignore certain portions of embedment at the top and bottom of the piles to account for the effects of seasonal moisture changes, disturbance during construction, cyclic lateral loading, low lateral stresses from freshly placed concrete, and development of tensile cracks in soils and/or rock.

TWP Shoal Project No. 07926-22-01

Reference: Vesic (1977) - Drilled Shafts, Vol II, 1999.

Location Abut 1

Pile, diameter 2 ft

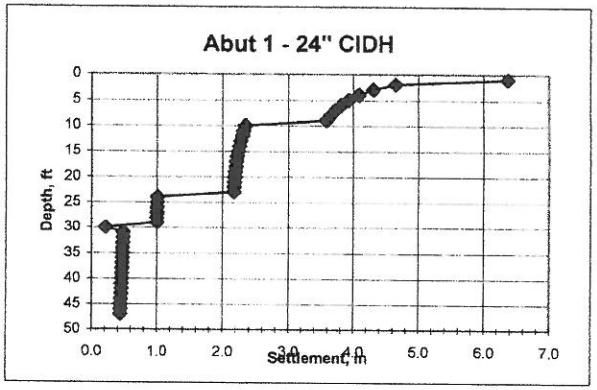

$Wt = Wc + Wbb + Wbs$

$Wt = [L/(AE)][Qh - 0.5\ Qms]$

Qms = Estimated load moblized in side resistance when the load Qh is applied to the head of the CIDH

$Wbb = Cp(Qmb)/(Bqmax)$

$wbs = [0.93+0.16SQRT(L/B)]Cp[Qms/(Lqmax)]$

$q_{max} = 0.59[N_{60}(Pa/\sigma'vb]^{0.8}\sigma'vb$

L	A	E		Qh	Qms		Wt	
ft	ft2	psi	ksf	kips	tons	kips	ft	in
0	3.1	4030000	580320	75	0.00	0.00	0.000	**0.000**
1	3.1	4030000	580320	75	0.16	0.32	0.000	**0.000**
2	3.1	4030000	580320	75	0.48	0.95	0.000	**0.001**
3	3.1	4030000	580320	75	0.95	1.90	0.000	**0.001**
4	3.1	4030000	580320	75	1.58	3.17	0.000	**0.002**
5	3.1	4030000	580320	75	2.38	4.75	0.000	**0.002**
6	3.1	4030000	580320	75	3.49	6.98	0.000	**0.003**
7	3.1	4030000	580320	75	4.79	9.58	0.000	**0.003**
8	3.1	4030000	580320	75	6.28	12.55	0.000	**0.004**
9	3.1	4030000	580320	75	7.95	15.89	0.000	**0.004**
10	3.1	4030000	580320	75	9.80	19.61	0.000	**0.004**
11	3.1	4030000	580320	75	11.85	23.69	0.000	**0.005**
12	3.1	4030000	580320	75	14.07	28.15	0.000	**0.005**
13	3.1	4030000	580320	75	16.49	32.97	0.000	**0.005**
14	3.1	4030000	580320	75	19.09	38.17	0.000	**0.005**
15	3.1	4030000	580320	75	21.87	43.74	0.000	**0.005**
16	3.1	4030000	580320	75	24.84	49.68	0.000	**0.005**
17	3.1	4030000	580320	75	28.00	56.00	0.000	**0.005**
18	3.1	4030000	580320	75	31.34	62.68	0.000	**0.005**
19	3.1	4030000	580320	75	34.87	69.73	0.000	**0.005**
20	3.1	4030000	580320	75	38.58	77.16	0.000	**0.005**
21	3.1	4030000	580320	75	42.78	85.57	0.000	**0.005**

Cp	Qmb		B	N	σ'	Pa	qmax	Wbb	
	tons	kips	ft		ksf	ksf	tsf	ft	in
0.13	50.3	100.5	2	15	0.00	2.1			
0.13	50.3	100.5	2	15	0.13	2.1	12.4	0.527	6.325
0.13	41.9	83.8	2	15	0.26	2.1	14.2	0.382	4.589
0.13	41.9	83.8	2	15	0.39	2.1	15.4	0.353	4.231
0.13	41.9	83.8	2	15	0.52	2.1	16.4	0.333	3.995
0.13	41.9	83.8	2	15	0.65	2.1	17.1	0.318	3.820
0.13	41.9	83.8	2	15	0.78	2.1	17.7	0.307	3.684
0.13	41.9	83.8	2	15	0.91	2.1	18.3	0.298	3.572
0.13	41.9	83.8	2	15	1.04	2.1	18.8	0.290	3.478
0.13	41.9	83.8	2	15	1.17	2.1	19.2	0.283	3.397
0.13	41.9	83.8	2	25	1.30	2.1	29.6	0.184	2.210
0.13	41.9	83.8	2	25	1.43	2.1	30.1	0.181	2.168
0.13	41.9	83.8	2	25	1.56	2.1	30.7	0.178	2.131
0.13	41.9	83.8	2	25	1.69	2.1	31.2	0.175	2.097
0.13	41.9	83.8	2	25	1.82	2.1	31.6	0.172	2.066
0.13	41.9	83.8	2	25	1.95	2.1	32.1	0.170	2.038
0.13	41.9	83.8	2	25	2.08	2.1	32.5	0.168	2.012
0.13	41.9	83.8	2	25	2.21	2.1	32.9	0.166	1.988
0.13	41.9	83.8	2	25	2.34	2.1	33.3	0.164	1.965
0.13	41.9	83.8	2	25	2.47	2.1	33.6	0.162	1.944
0.13	41.9	83.8	2	25	2.60	2.1	34.0	0.160	1.924
0.13	41.9	83.8	2	25	2.73	2.1	34.3	0.159	1.905

Wbb		Wt
ft	in	in
0.003	0.042	6.4
0.005	0.057	4.6
0.006	0.072	4.3
0.007	0.087	4.1
0.009	0.103	3.9
0.010	0.124	3.8
0.012	0.143	3.7
0.014	0.163	3.6
0.015	0.182	3.6
0.011	0.133	2.3
0.012	0.146	2.3
0.013	0.158	2.3
0.014	0.170	2.3
0.015	0.182	2.3
0.016	0.194	2.2
0.017	0.206	2.2
0.018	0.218	2.2
0.019	0.230	2.2
0.020	0.242	2.2
0.021	0.254	2.2
0.022	0.268	2.2

22	3.1	4030000	580320	75	47.19	94.38	0.000	**0.004**
23	3.1	4030000	580320	75	51.79	103.58	0.000	**0.004**
24	3.1	4030000	580320	75	56.60	113.19	0.000	**0.003**
25	3.1	4030000	580320	75	61.60	123.20	0.000	**0.002**
26	3.1	4030000	580320	75	66.06	132.12	0.000	**0.002**
27	3.1	4030000	580320	75	70.69	141.39	0.000	**0.001**
28	3.1	4030000	580320	75	75.50	151.00	0.000	**0.000**
29	3.1	4030000	580320	75	80.47	160.95	0.000	**-0.001**
30	3.1	4030000	580320	75	85.63	171.26	0.000	**-0.002**
31	3.1	4030000	580320	75	93.51	187.03	0.000	**-0.004**
32	3.1	4030000	580320	75	101.66	203.33	0.000	**-0.006**
33	3.1	4030000	580320	75	110.08	220.15	-0.001	**-0.008**
34	3.1	4030000	580320	75	118.75	237.51	-0.001	**-0.010**
35	3.1	4030000	580320	75	127.57	255.14	-0.001	**-0.012**
36	3.1	4030000	580320	75	136.53	273.06	-0.001	**-0.015**
37	3.1	4030000	580320	75	145.63	291.26	-0.001	**-0.017**
38	3.1	4030000	580320	75	154.88	309.75	-0.002	**-0.020**
39	3.1	4030000	580320	75	164.26	328.52	-0.002	**-0.023**
40	3.1	4030000	580320	75	173.79	347.57	-0.002	**-0.026**
41	3.1	4030000	580320	75	181.84	363.69	-0.002	**-0.029**
42	3.1	4030000	580320	75	190.02	380.04	-0.003	**-0.032**
43	3.1	4030000	580320	75	198.31	396.62	-0.003	**-0.035**
44	3.1	4030000	580320	75	206.72	413.45	-0.003	**-0.039**
45	3.1	4030000	580320	75	215.25	430.50	-0.004	**-0.042**
46	3.1	4030000	580320	75	223.90	447.80	-0.004	**-0.046**
47	3.1	4030000	580320	75	232.66	465.33	-0.004	**-0.049**

0.13	41.9	83.8	2	25	2.86	2.1	34.6	0.157	1.888
0.13	41.9	83.8	2	25	2.99	2.1	34.9	0.156	1.871
0.07	41.9	83.8	2	30	3.12	2.1	40.8	0.072	0.863
0.07	41.9	83.8	2	30	3.25	2.1	41.1	0.071	0.856
0.07	41.9	83.8	2	30	3.38	2.1	41.4	0.071	0.850
0.07	41.9	83.8	2	30	3.51	2.1	41.7	0.070	0.843
0.07	41.9	83.8	2	30	3.64	2.1	42.0	0.070	0.837
0.07	41.9	83.8	2	30	3.78	2.1	42.3	0.069	0.831
0.03	41.9	83.8	2	70	3.91	2.1	84.0	0.015	0.180
0.03	104.7	209.4	2	70	4.05	2.1	84.6	0.037	0.446
0.03	104.7	209.4	2	70	4.18	2.1	85.1	0.037	0.443
0.03	104.7	209.4	2	70	4.32	2.1	85.7	0.037	0.440
0.03	104.7	209.4	2	70	4.45	2.1	86.2	0.036	0.437
0.03	104.7	209.4	2	70	4.52	2.1	86.5	0.036	0.436
0.03	104.7	209.4	2	70	4.60	2.1	86.7	0.036	0.435
0.03	104.7	209.4	2	70	4.67	2.1	87.0	0.036	0.433
0.03	104.7	209.4	2	70	4.74	2.1	87.3	0.036	0.432
0.03	104.7	209.4	2	70	4.81	2.1	87.5	0.036	0.431
0.03	104.7	209.4	2	70	4.89	2.1	87.8	0.036	0.429
0.03	104.7	209.4	2	70	4.96	2.1	88.1	0.036	0.428
0.03	104.7	209.4	2	70	5.03	2.1	88.3	0.036	0.427
0.03	104.7	209.4	2	70	5.10	2.1	88.6	0.035	0.426
0.03	104.7	209.4	2	70	5.18	2.1	88.8	0.035	0.424
0.03	104.7	209.4	2	70	5.25	2.1	89.1	0.035	0.423
0.03	104.7	209.4	2	70	5.32	2.1	89.3	0.035	0.422
0.03	104.7	209.4	2	70	5.39	2.1	89.6	0.035	0.421

0.024	0.282	2.2
0.025	0.296	2.2
0.012	0.144	1.0
0.013	0.151	1.0
0.013	0.155	1.0
0.013	0.160	1.0
0.014	0.165	1.0
0.014	0.169	1.0
0.003	0.038	0.2
0.003	0.040	0.5
0.004	0.042	0.5
0.004	0.044	0.5
0.004	0.046	0.5
0.004	0.049	0.5
0.004	0.051	0.5
0.004	0.053	0.5
0.005	0.055	0.5
0.005	0.057	0.5
0.005	0.059	0.5
0.005	0.060	0.5
0.005	0.061	0.5
0.005	0.063	0.5
0.005	0.064	0.4
0.005	0.065	0.4
0.006	0.067	0.4
0.006	0.068	0.4

TWP Shoal Project No. 07926-22-01

Reference: Vesic (1977) - Drilled Shafts, Vol II, 1999.

Location Bent 2

Pile, diameter 2 ft

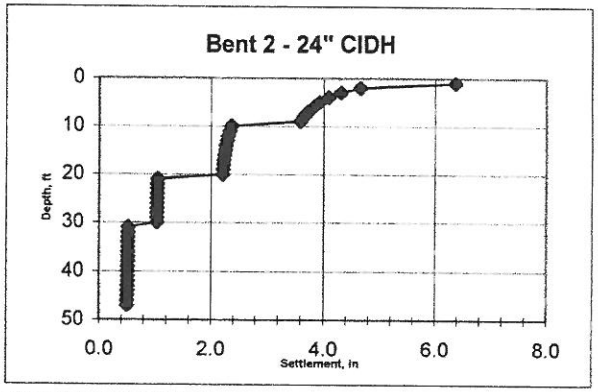

$Wt = Wc + Wbb + Wbs$

$Wt = [L/(AE)][Qh - 0.5\ Qms]$

Qms = Estimated load moblized in side resistance when the load Qh is applied to the head of the CIDH

$Wbb = Cp(Qmb)/(Bqmax)$

$wbs = [0.93+0.16SQRT(L/B)]Cp[Qms/(Lqmax)]$

$q_{max} = 0.59[N_{60}(Pa/\sigma'vb]^{0.8}\sigma'vb$

L	A	E		Qh	Qms		Wt	
ft	ft2	psi	ksf	kips	tons	kips	ft	in
0	3.1	4030000	580320	254	0.00	0.00	0.000	**0.000**
1	3.1	4030000	580320	254	0.16	0.32	0.000	**0.002**
2	3.1	4030000	580320	254	0.48	0.95	0.000	**0.003**
3	3.1	4030000	580320	254	0.95	1.90	0.000	**0.005**
4	3.1	4030000	580320	254	1.58	3.17	0.001	**0.007**
5	3.1	4030000	580320	254	2.38	4.75	0.001	**0.008**
6	3.1	4030000	580320	254	3.49	6.98	0.001	**0.010**
7	3.1	4030000	580320	254	4.79	9.58	0.001	**0.012**
8	3.1	4030000	580320	254	6.28	12.55	0.001	**0.013**
9	3.1	4030000	580320	254	7.95	15.89	0.001	**0.015**
10	3.1	4030000	580320	254	9.80	19.61	0.001	**0.016**
11	3.1	4030000	580320	254	11.85	23.69	0.001	**0.018**
12	3.1	4030000	580320	254	14.07	28.15	0.002	**0.019**
13	3.1	4030000	580320	254	16.49	32.97	0.002	**0.021**
14	3.1	4030000	580320	254	19.09	38.17	0.002	**0.022**
15	3.1	4030000	580320	254	21.87	43.74	0.002	**0.023**
16	3.1	4030000	580320	254	24.84	49.68	0.002	**0.024**
17	3.1	4030000	580320	254	28.00	56.00	0.002	**0.026**
18	3.1	4030000	580320	254	31.34	62.68	0.002	**0.027**
19	3.1	4030000	580320	254	34.87	69.73	0.002	**0.028**
20	3.1	4030000	580320	254	38.58	77.16	0.002	**0.029**
21	3.1	4030000	580320	254	42.78	85.57	0.002	**0.030**

Cp	Qmb		B	N	σ'	Pa	qmax	Wbb	
	tons	kips	ft		ksf	ksf	tsf	ft	in
0.13	50.3	100.5	2	15	0.00	2.1			
0.13	50.3	100.5	2	15	0.13	2.1	12.4	0.527	6.325
0.13	41.9	83.8	2	15	0.26	2.1	14.2	0.382	4.589
0.13	41.9	83.8	2	15	0.39	2.1	15.4	0.353	4.231
0.13	41.9	83.8	2	15	0.52	2.1	16.4	0.333	3.995
0.13	41.9	83.8	2	15	0.65	2.1	17.1	0.318	3.820
0.13	41.9	83.8	2	15	0.78	2.1	17.7	0.307	3.684
0.13	41.9	83.8	2	15	0.91	2.1	18.3	0.298	3.572
0.13	41.9	83.8	2	15	1.04	2.1	18.8	0.290	3.478
0.13	41.9	83.8	2	15	1.17	2.1	19.2	0.283	3.397
0.13	41.9	83.8	2	25	1.30	2.1	29.6	0.184	2.210
0.13	41.9	83.8	2	25	1.43	2.1	30.1	0.181	2.168
0.13	41.9	83.8	2	25	1.56	2.1	30.7	0.178	2.131
0.13	41.9	83.8	2	25	1.69	2.1	31.2	0.175	2.097
0.13	41.9	83.8	2	25	1.82	2.1	31.6	0.172	2.066
0.13	41.9	83.8	2	25	1.95	2.1	32.1	0.170	2.038
0.13	41.9	83.8	2	25	2.08	2.1	32.5	0.168	2.012
0.13	41.9	83.8	2	25	2.21	2.1	32.9	0.166	1.988
0.13	41.9	83.8	2	25	2.34	2.1	33.3	0.164	1.965
0.13	41.9	83.8	2	25	2.47	2.1	33.6	0.162	1.944
0.13	41.9	83.8	2	25	2.60	2.1	34.0	0.160	1.924
0.07	41.9	83.8	2	30	2.73	2.1	39.7	0.074	0.887

Wbb		Wt
ft	in	in
0.003	0.042	6.4
0.005	0.057	4.6
0.006	0.072	4.3
0.007	0.087	4.1
0.009	0.103	3.9
0.010	0.124	3.8
0.012	0.143	3.7
0.014	0.163	3.7
0.015	0.182	3.6
0.011	0.133	2.4
0.012	0.146	2.3
0.013	0.158	2.3
0.014	0.170	2.3
0.015	0.182	2.3
0.016	0.194	2.3
0.017	0.206	2.2
0.018	0.218	2.2
0.019	0.230	2.2
0.020	0.242	2.2
0.021	0.254	2.2
0.010	0.125	1.0

22	3.1	4030000	580320	254	47.19	94.38	0.003	**0.030**
23	3.1	4030000	580320	254	51.79	103.58	0.003	**0.031**
24	3.1	4030000	580320	254	56.60	113.19	0.003	**0.032**
25	3.1	4030000	580320	254	61.60	123.20	0.003	**0.032**
26	3.1	4030000	580320	254	66.06	132.12	0.003	**0.033**
27	3.1	4030000	580320	254	70.69	141.39	0.003	**0.033**
28	3.1	4030000	580320	254	75.50	151.00	0.003	**0.033**
29	3.1	4030000	580320	254	80.47	160.95	0.003	**0.034**
30	3.1	4030000	580320	254	85.63	171.26	0.003	**0.034**
31	3.1	4030000	580320	254	93.51	187.03	0.003	**0.033**
32	3.1	4030000	580320	254	101.66	203.33	0.003	**0.033**
33	3.1	4030000	580320	254	110.08	220.15	0.003	**0.032**
34	3.1	4030000	580320	254	118.75	237.51	0.003	**0.031**
35	3.1	4030000	580320	254	127.57	255.14	0.002	**0.030**
36	3.1	4030000	580320	254	136.53	273.06	0.002	**0.028**
37	3.1	4030000	580320	254	145.63	291.26	0.002	**0.027**
38	3.1	4030000	580320	254	154.88	309.75	0.002	**0.025**
39	3.1	4030000	580320	254	164.26	328.52	0.002	**0.023**
40	3.1	4030000	580320	254	173.79	347.57	0.002	**0.021**
41	3.1	4030000	580320	254	181.84	363.69	0.002	**0.020**
42	3.1	4030000	580320	254	190.02	380.04	0.001	**0.018**
43	3.1	4030000	580320	254	198.31	396.62	0.001	**0.016**
44	3.1	4030000	580320	254	206.72	413.45	0.001	**0.014**
45	3.1	4030000	580320	254	215.25	430.50	0.001	**0.012**
46	3.1	4030000	580320	254	223.90	447.80	0.001	**0.009**
47	3.1	4030000	580320	254	232.66	465.33	0.001	**0.007**

0.07	41.9	83.8	2	30	2.86	2.1	40.1	0.073	0.878	
0.07	41.9	83.8	2	30	2.99	2.1	40.4	0.073	0.871	
0.07	41.9	83.8	2	30	3.12	2.1	40.8	0.072	0.863	
0.07	41.9	83.8	2	30	3.25	2.1	41.1	0.071	0.856	
0.07	41.9	83.8	2	30	3.38	2.1	41.4	0.071	0.850	
0.07	41.9	83.8	2	30	3.51	2.1	41.7	0.070	0.843	
0.07	41.9	83.8	2	30	3.64	2.1	42.0	0.070	0.837	
0.07	41.9	83.8	2	30	3.78	2.1	42.3	0.069	0.831	
0.07	41.9	83.8	2	30	3.91	2.1	42.6	0.069	0.825	
0.03	104.7	209.4	2	70	4.05	2.1	84.6	0.037	0.446	
0.03	104.7	209.4	2	70	4.18	2.1	85.1	0.037	0.443	
0.03	104.7	209.4	2	70	4.32	2.1	85.7	0.037	0.440	
0.03	104.7	209.4	2	70	4.45	2.1	86.2	0.036	0.437	
0.03	104.7	209.4	2	70	4.52	2.1	86.5	0.036	0.436	
0.03	104.7	209.4	2	70	4.60	2.1	86.7	0.036	0.435	
0.03	104.7	209.4	2	70	4.67	2.1	87.0	0.036	0.433	
0.03	104.7	209.4	2	70	4.74	2.1	87.3	0.036	0.432	
0.03	104.7	209.4	2	70	4.81	2.1	87.5	0.036	0.431	
0.03	104.7	209.4	2	70	4.89	2.1	87.8	0.036	0.429	
0.03	104.7	209.4	2	70	4.96	2.1	88.1	0.036	0.428	
0.03	104.7	209.4	2	70	5.03	2.1	88.3	0.036	0.427	
0.03	104.7	209.4	2	70	5.10	2.1	88.6	0.035	0.426	
0.03	104.7	209.4	2	70	5.18	2.1	88.8	0.035	0.424	
0.03	104.7	209.4	2	70	5.25	2.1	89.1	0.035	0.423	
0.03	104.7	209.4	2	70	5.32	2.1	89.3	0.035	0.422	
0.03	104.7	209.4	2	70	5.39	2.1	89.6	0.035	0.421	

0.011	0.131	1.0
0.011	0.138	1.0
0.012	0.144	1.0
0.013	0.151	1.0
0.013	0.155	1.0
0.013	0.160	1.0
0.014	0.165	1.0
0.014	0.169	1.0
0.015	0.174	1.0
0.003	0.040	0.5
0.004	0.042	0.5
0.004	0.044	0.5
0.004	0.046	0.5
0.004	0.049	0.5
0.004	0.051	0.5
0.004	0.053	0.5
0.005	0.055	0.5
0.005	0.057	0.5
0.005	0.059	0.5
0.005	0.060	0.5
0.005	0.061	0.5
0.005	0.063	0.5
0.005	0.064	0.5
0.005	0.065	0.5
0.006	0.067	0.5
0.006	0.068	0.5

TWP Shoal Project No. 07926-22-01

Reference: Vesic (1977) - Drilled Shafts, Vol II, 1999.

Location Bent 3

Pile, diameter 2 ft

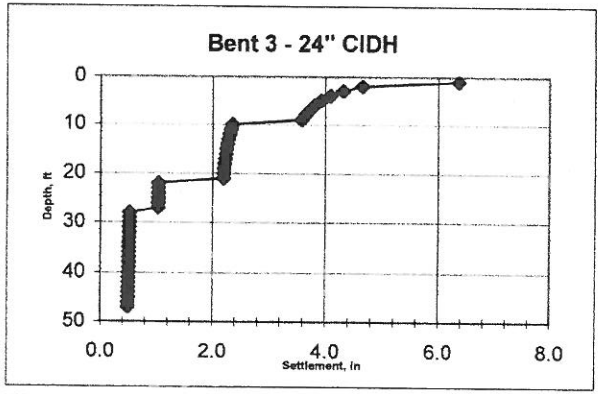

$Wt = Wc + Wbb + Wbs$

$Wt = [L/(AE)][Qh - 0.5\ Qms]$

Qms = Estimated load moblized in side resistance when the load Qh is applied to the head of the CIDH

$Wbb = Cp(Qmb)/(Bqmax)$

$wbs = [0.93+0.16SQRT(L/B)]Cp[Qms/(Lqmax)]$

$q_{max} = 0.59[N_{60}(Pa/\sigma'vb]^{0.8}\sigma'vb$

L	A	E		Qh	Qms		Wt	
ft	ft2	psi	ksf	kips	tons	kips	ft	in
0	3.1	4030000	580320	248	0.00	0.00	0.000	**0.000**
1	3.1	4030000	580320	248	0.16	0.32	0.000	**0.002**
2	3.1	4030000	580320	248	0.48	0.95	0.000	**0.003**
3	3.1	4030000	580320	248	0.95	1.90	0.000	**0.005**
4	3.1	4030000	580320	248	1.58	3.17	0.001	**0.007**
5	3.1	4030000	580320	248	2.38	4.75	0.001	**0.008**
6	3.1	4030000	580320	248	3.33	6.66	0.001	**0.010**
7	3.1	4030000	580320	248	4.63	9.25	0.001	**0.011**
8	3.1	4030000	580320	248	6.11	12.23	0.001	**0.013**
9	3.1	4030000	580320	248	7.78	15.57	0.001	**0.014**
10	3.1	4030000	580320	248	9.64	19.28	0.001	**0.016**
11	3.1	4030000	580320	248	11.68	23.36	0.001	**0.017**
12	3.1	4030000	580320	248	13.91	27.82	0.002	**0.019**
13	3.1	4030000	580320	248	16.32	32.65	0.002	**0.020**
14	3.1	4030000	580320	248	18.92	37.85	0.002	**0.021**
15	3.1	4030000	580320	248	21.71	43.42	0.002	**0.023**
16	3.1	4030000	580320	248	24.68	49.36	0.002	**0.024**
17	3.1	4030000	580320	248	27.83	55.67	0.002	**0.025**
18	3.1	4030000	580320	248	31.18	62.35	0.002	**0.026**
19	3.1	4030000	580320	248	34.70	69.41	0.002	**0.027**
20	3.1	4030000	580320	248	38.42	76.83	0.002	**0.028**
21	3.1	4030000	580320	248	42.32	84.63	0.002	**0.029**

Cp	Qmb		B	N	σ'	Pa	qmax	Wbb	
	tons	kips	ft		ksf	ksf	tsf	ft	in
0.13	50.3	100.5	2	15	0.00	2.1			
0.13	50.3	100.5	2	15	0.13	2.1	12.4	0.527	6.325
0.13	41.9	83.8	2	15	0.26	2.1	14.2	0.382	4.589
0.13	41.9	83.8	2	15	0.39	2.1	15.4	0.353	4.231
0.13	41.9	83.8	2	15	0.52	2.1	16.4	0.333	3.995
0.13	41.9	83.8	2	15	0.65	2.1	17.1	0.318	3.820
0.13	41.9	83.8	2	15	0.78	2.1	17.7	0.307	3.684
0.13	41.9	83.8	2	15	0.91	2.1	18.3	0.298	3.572
0.13	41.9	83.8	2	15	1.04	2.1	18.8	0.290	3.478
0.13	41.9	83.8	2	15	1.17	2.1	19.2	0.283	3.397
0.13	41.9	83.8	2	25	1.30	2.1	29.6	0.184	2.210
0.13	41.9	83.8	2	25	1.43	2.1	30.1	0.181	2.168
0.13	41.9	83.8	2	25	1.56	2.1	30.7	0.178	2.131
0.13	41.9	83.8	2	25	1.69	2.1	31.2	0.175	2.097
0.13	41.9	83.8	2	25	1.82	2.1	31.6	0.172	2.066
0.13	41.9	83.8	2	25	1.95	2.1	32.1	0.170	2.038
0.13	41.9	83.8	2	25	2.08	2.1	32.5	0.168	2.012
0.13	41.9	83.8	2	25	2.21	2.1	32.9	0.166	1.988
0.13	41.9	83.8	2	25	2.34	2.1	33.3	0.164	1.965
0.13	41.9	83.8	2	25	2.47	2.1	33.6	0.162	1.944
0.13	41.9	83.8	2	25	2.60	2.1	34.0	0.160	1.924
0.13	41.9	83.8	2	25	2.73	2.1	34.3	0.159	1.905

Wbb		Wt
ft	in	in
0.003	0.042	6.4
0.005	0.057	4.6
0.006	0.072	4.3
0.007	0.087	4.1
0.009	0.103	3.9
0.010	0.118	3.8
0.012	0.139	3.7
0.013	0.159	3.6
0.015	0.178	3.6
0.011	0.131	2.4
0.012	0.144	2.3
0.013	0.156	2.3
0.014	0.168	2.3
0.015	0.180	2.3
0.016	0.193	2.3
0.017	0.205	2.2
0.018	0.217	2.2
0.019	0.229	2.2
0.020	0.241	2.2
0.021	0.253	2.2
0.022	0.266	2.2

22	3.1	4030000	580320	248	46.72	93.44	0.002	**0.030**
23	3.1	4030000	580320	248	51.32	102.65	0.003	**0.030**
24	3.1	4030000	580320	248	56.13	112.26	0.003	**0.031**
25	3.1	4030000	580320	248	61.13	122.26	0.003	**0.031**
26	3.1	4030000	580320	248	65.59	131.19	0.003	**0.032**
27	3.1	4030000	580320	248	70.23	140.47	0.003	**0.032**
28	3.1	4030000	580320	248	77.36	154.71	0.003	**0.032**
29	3.1	4030000	580320	248	84.75	169.49	0.003	**0.032**
30	3.1	4030000	580320	248	92.40	184.79	0.003	**0.031**
31	3.1	4030000	580320	248	100.31	200.62	0.003	**0.031**
32	3.1	4030000	580320	248	108.49	216.98	0.002	**0.030**
33	3.1	4030000	580320	248	116.81	233.62	0.002	**0.029**
34	3.1	4030000	580320	248	125.27	250.55	0.002	**0.028**
35	3.1	4030000	580320	248	133.88	267.75	0.002	**0.027**
36	3.1	4030000	580320	248	142.62	285.24	0.002	**0.025**
37	3.1	4030000	580320	248	151.51	303.02	0.002	**0.024**
38	3.1	4030000	580320	248	160.54	321.08	0.002	**0.022**
39	3.1	4030000	580320	248	169.71	339.42	0.002	**0.020**
40	3.1	4030000	580320	248	179.02	358.04	0.002	**0.018**
41	3.1	4030000	580320	248	186.90	373.80	0.001	**0.017**
42	3.1	4030000	580320	248	194.90	389.79	0.001	**0.015**
43	3.1	4030000	580320	248	203.01	406.02	0.001	**0.013**
44	3.1	4030000	580320	248	211.24	422.49	0.001	**0.011**
45	3.1	4030000	580320	248	219.59	439.19	0.001	**0.009**
46	3.1	4030000	580320	248	228.06	456.12	0.001	**0.006**
47	3.1	4030000	580320	248	236.65	473.30	0.000	**0.004**

0.07	41.9	83.8	2	30	2.86	2.1	40.1	0.073	0.878
0.07	41.9	83.8	2	30	2.99	2.1	40.4	0.073	0.871
0.07	41.9	83.8	2	30	3.12	2.1	40.8	0.072	0.863
0.07	41.9	83.8	2	30	3.25	2.1	41.1	0.071	0.856
0.07	41.9	83.8	2	30	3.38	2.1	41.4	0.071	0.850
0.07	41.9	83.8	2	30	3.51	2.1	41.7	0.070	0.843
0.03	104.7	209.4	2	70	3.64	2.1	82.8	0.038	0.455
0.03	104.7	209.4	2	70	3.78	2.1	83.4	0.038	0.452
0.03	104.7	209.4	2	70	3.91	2.1	84.0	0.037	0.449
0.03	104.7	209.4	2	70	4.05	2.1	84.6	0.037	0.446
0.03	104.7	209.4	2	70	4.18	2.1	85.1	0.037	0.443
0.03	104.7	209.4	2	70	4.32	2.1	85.7	0.037	0.440
0.03	104.7	209.4	2	70	4.45	2.1	86.2	0.036	0.437
0.03	104.7	209.4	2	70	4.52	2.1	86.5	0.036	0.436
0.03	104.7	209.4	2	70	4.60	2.1	86.7	0.036	0.435
0.03	104.7	209.4	2	70	4.67	2.1	87.0	0.036	0.433
0.03	104.7	209.4	2	70	4.74	2.1	87.3	0.036	0.432
0.03	104.7	209.4	2	70	4.81	2.1	87.5	0.036	0.431
0.03	104.7	209.4	2	70	4.89	2.1	87.8	0.036	0.429
0.03	104.7	209.4	2	70	4.96	2.1	88.1	0.036	0.428
0.03	104.7	209.4	2	70	5.03	2.1	88.3	0.036	0.427
0.03	104.7	209.4	2	70	5.10	2.1	88.6	0.035	0.426
0.03	104.7	209.4	2	70	5.18	2.1	88.8	0.035	0.424
0.03	104.7	209.4	2	70	5.25	2.1	89.1	0.035	0.423
0.03	104.7	209.4	2	70	5.32	2.1	89.3	0.035	0.422
0.03	104.7	209.4	2	70	5.39	2.1	89.6	0.035	0.421

0.011	0.130	1.0
0.011	0.137	1.0
0.012	0.143	1.0
0.012	0.150	1.0
0.013	0.154	1.0
0.013	0.159	1.0
0.003	0.037	0.5
0.003	0.039	0.5
0.003	0.041	0.5
0.004	0.043	0.5
0.004	0.045	0.5
0.004	0.047	0.5
0.004	0.049	0.5
0.004	0.051	0.5
0.004	0.053	0.5
0.005	0.055	0.5
0.005	0.057	0.5
0.005	0.059	0.5
0.005	0.060	0.5
0.005	0.062	0.5
0.005	0.063	0.5
0.005	0.064	0.5
0.005	0.065	0.5
0.006	0.067	0.5
0.006	0.068	0.5
0.006	0.069	0.5

TWP Shoal Project No. 07926-22-01

Reference: Vesic (1977) - Drilled Shafts, Vol II, 1999.

Location Bent 4

Pile, diameter 2 ft

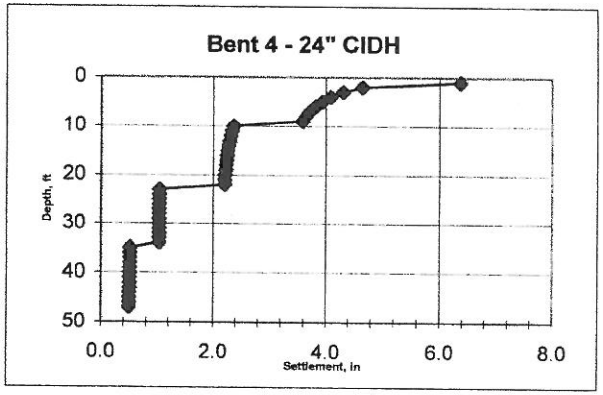

$Wt = Wc + Wbb + Wbs$

$Wt = [L/(AE)][Qh - 0.5\ Qms]$

Qms = Estimated load moblized in side resistance when the load Qh is applied to the head of the CIDH

$Wbb = Cp(Qmb)/(Bqmax)$

$wbs = [0.93+0.16SQRT(L/B)]Cp[Qms/(Lqmax)]$

$q_{max} = 0.59[N_{60}(Pa/\sigma'vb]^{0.8}\sigma'vb$

L	A	E		Qh	Qms		Wt	
ft	ft2	psi	ksf	kips	tons	kips	ft	in
0	3.1	4030000	580320	268	0.00	0.00	0.000	**0.000**
1	3.1	4030000	580320	268	0.16	0.32	0.000	**0.002**
2	3.1	4030000	580320	268	0.48	0.95	0.000	**0.004**
3	3.1	4030000	580320	268	0.95	1.90	0.000	**0.005**
4	3.1	4030000	580320	268	1.58	3.17	0.001	**0.007**
5	3.1	4030000	580320	268	2.38	4.75	0.001	**0.009**
6	3.1	4030000	580320	268	3.33	6.66	0.001	**0.011**
7	3.1	4030000	580320	268	4.44	8.87	0.001	**0.012**
8	3.1	4030000	580320	268	5.92	11.84	0.001	**0.014**
9	3.1	4030000	580320	268	7.59	15.19	0.001	**0.016**
10	3.1	4030000	580320	268	9.45	18.90	0.001	**0.017**
11	3.1	4030000	580320	268	11.49	22.98	0.002	**0.019**
12	3.1	4030000	580320	268	13.72	27.44	0.002	**0.020**
13	3.1	4030000	580320	268	16.13	32.27	0.002	**0.022**
14	3.1	4030000	580320	268	18.73	37.47	0.002	**0.023**
15	3.1	4030000	580320	268	21.52	43.03	0.002	**0.025**
16	3.1	4030000	580320	268	24.49	48.98	0.002	**0.026**
17	3.1	4030000	580320	268	27.64	55.29	0.002	**0.027**
18	3.1	4030000	580320	268	30.99	61.97	0.002	**0.028**
19	3.1	4030000	580320	268	34.51	69.03	0.002	**0.030**
20	3.1	4030000	580320	268	38.23	76.45	0.003	**0.031**
21	3.1	4030000	580320	268	42.13	84.25	0.003	**0.032**

Cp	Qmb		B	N	σ'	Pa	qmax	Wbb	
	tons	kips	ft		ksf	ksf	tsf	ft	in
0.13	50.3	100.5	2	15	0.00	2.1			
0.13	50.3	100.5	2	15	0.13	2.1	12.4	0.527	6.325
0.13	41.9	83.8	2	15	0.26	2.1	14.2	0.382	4.589
0.13	41.9	83.8	2	15	0.39	2.1	15.4	0.353	4.231
0.13	41.9	83.8	2	15	0.52	2.1	16.4	0.333	3.995
0.13	41.9	83.8	2	15	0.65	2.1	17.1	0.318	3.820
0.13	41.9	83.8	2	15	0.78	2.1	17.7	0.307	3.684
0.13	41.9	83.8	2	15	0.91	2.1	18.3	0.298	3.572
0.13	41.9	83.8	2	15	1.04	2.1	18.8	0.290	3.478
0.13	41.9	83.8	2	15	1.17	2.1	19.2	0.283	3.397
0.13	41.9	83.8	2	25	1.30	2.1	29.6	0.184	2.210
0.13	41.9	83.8	2	25	1.43	2.1	30.1	0.181	2.168
0.13	41.9	83.8	2	25	1.56	2.1	30.7	0.178	2.131
0.13	41.9	83.8	2	25	1.69	2.1	31.2	0.175	2.097
0.13	41.9	83.8	2	25	1.82	2.1	31.6	0.172	2.066
0.13	41.9	83.8	2	25	1.95	2.1	32.1	0.170	2.038
0.13	41.9	83.8	2	25	2.08	2.1	32.5	0.168	2.012
0.13	41.9	83.8	2	25	2.21	2.1	32.9	0.166	1.988
0.13	41.9	83.8	2	25	2.34	2.1	33.3	0.164	1.965
0.13	41.9	83.8	2	25	2.47	2.1	33.6	0.162	1.944
0.13	41.9	83.8	2	25	2.60	2.1	34.0	0.160	1.924
0.13	41.9	83.8	2	25	2.73	2.1	34.3	0.159	1.905

Wbb		Wt
ft	in	in
0.003	0.042	6.4
0.005	0.057	4.6
0.006	0.072	4.3
0.007	0.087	4.1
0.009	0.103	3.9
0.010	0.118	3.8
0.011	0.133	3.7
0.013	0.154	3.6
0.014	0.174	3.6
0.011	0.128	2.4
0.012	0.141	2.3
0.013	0.154	2.3
0.014	0.166	2.3
0.015	0.179	2.3
0.016	0.191	2.3
0.017	0.203	2.2
0.018	0.216	2.2
0.019	0.228	2.2
0.020	0.240	2.2
0.021	0.252	2.2
0.022	0.264	2.2

22	3.1	4030000	580320	268	46.21	92.42	0.003	**0.033**
23	3.1	4030000	580320	268	50.81	101.63	0.003	**0.033**
24	3.1	4030000	580320	268	55.62	111.24	0.003	**0.034**
25	3.1	4030000	580320	268	60.62	121.25	0.003	**0.035**
26	3.1	4030000	580320	268	65.08	130.17	0.003	**0.035**
27	3.1	4030000	580320	268	69.72	139.43	0.003	**0.036**
28	3.1	4030000	580320	268	74.52	149.04	0.003	**0.036**
29	3.1	4030000	580320	268	79.50	158.99	0.003	**0.036**
30	3.1	4030000	580320	268	84.64	169.29	0.003	**0.037**
31	3.1	4030000	580320	268	89.96	179.93	0.003	**0.037**
32	3.1	4030000	580320	268	95.45	190.91	0.003	**0.037**
33	3.1	4030000	580320	268	101.04	202.08	0.003	**0.037**
34	3.1	4030000	580320	268	106.72	213.44	0.003	**0.037**
35	3.1	4030000	580320	268	115.27	230.54	0.003	**0.036**
36	3.1	4030000	580320	268	123.95	247.91	0.003	**0.035**
37	3.1	4030000	580320	268	132.78	265.57	0.003	**0.033**
38	3.1	4030000	580320	268	141.75	283.51	0.003	**0.032**
39	3.1	4030000	580320	268	150.87	301.73	0.003	**0.030**
40	3.1	4030000	580320	268	160.12	320.24	0.002	**0.029**
41	3.1	4030000	580320	268	167.95	335.90	0.002	**0.027**
42	3.1	4030000	580320	268	175.90	351.79	0.002	**0.026**
43	3.1	4030000	580320	268	183.96	367.92	0.002	**0.024**
44	3.1	4030000	580320	268	192.15	384.29	0.002	**0.022**
45	3.1	4030000	580320	268	200.45	400.89	0.002	**0.020**
46	3.1	4030000	580320	268	208.87	417.73	0.002	**0.018**
47	3.1	4030000	580320	268	217.41	434.81	0.001	**0.016**

0.13	41.9	83.8	2	25	2.86	2.1	34.6	0.157	1.888
0.07	41.9	83.8	2	30	2.99	2.1	40.4	0.073	0.871
0.07	41.9	83.8	2	30	3.12	2.1	40.8	0.072	0.863
0.07	41.9	83.8	2	30	3.25	2.1	41.1	0.071	0.856
0.07	41.9	83.8	2	30	3.38	2.1	41.4	0.071	0.850
0.07	41.9	83.8	2	30	3.51	2.1	41.7	0.070	0.843
0.07	41.9	83.8	2	30	3.64	2.1	42.0	0.070	0.837
0.07	41.9	83.8	2	30	3.78	2.1	42.3	0.069	0.831
0.07	41.9	83.8	2	30	3.91	2.1	42.6	0.069	0.825
0.07	41.9	83.8	2	30	4.05	2.1	42.9	0.068	0.820
0.07	41.9	83.8	2	30	4.18	2.1	43.2	0.068	0.814
0.07	41.9	83.8	2	30	4.32	2.1	43.5	0.067	0.809
0.07	41.9	83.8	2	30	4.45	2.1	43.8	0.067	0.804
0.03	104.7	209.4	2	70	4.52	2.1	86.5	0.036	0.436
0.03	104.7	209.4	2	70	4.60	2.1	86.7	0.036	0.435
0.03	104.7	209.4	2	70	4.67	2.1	87.0	0.036	0.433
0.03	104.7	209.4	2	70	4.74	2.1	87.3	0.036	0.432
0.03	104.7	209.4	2	70	4.81	2.1	87.5	0.036	0.431
0.03	104.7	209.4	2	70	4.89	2.1	87.8	0.036	0.429
0.03	104.7	209.4	2	70	4.96	2.1	88.1	0.036	0.428
0.03	104.7	209.4	2	70	5.03	2.1	88.3	0.036	0.427
0.03	104.7	209.4	2	70	5.10	2.1	88.6	0.035	0.426
0.03	104.7	209.4	2	70	5.18	2.1	88.8	0.035	0.424
0.03	104.7	209.4	2	70	5.25	2.1	89.1	0.035	0.423
0.03	104.7	209.4	2	70	5.32	2.1	89.3	0.035	0.422
0.03	104.7	209.4	2	70	5.39	2.1	89.6	0.035	0.421

0.023	0.277	2.2
0.011	0.135	1.0
0.012	0.142	1.0
0.012	0.148	1.0
0.013	0.153	1.0
0.013	0.158	1.0
0.014	0.163	1.0
0.014	0.167	1.0
0.014	0.172	1.0
0.015	0.177	1.0
0.015	0.182	1.0
0.016	0.187	1.0
0.016	0.192	1.0
0.004	0.044	0.5
0.004	0.046	0.5
0.004	0.048	0.5
0.004	0.050	0.5
0.004	0.052	0.5
0.005	0.054	0.5
0.005	0.055	0.5
0.005	0.057	0.5
0.005	0.058	0.5
0.005	0.059	0.5
0.005	0.061	0.5
0.005	0.062	0.5
0.005	0.063	0.5

TWP Shoal Project No. 07926-22-01

Reference: Vesic (1977) - Drilled Shafts, Vol II, 1999.

Location Abut 1

Pile, diameter 5 ft

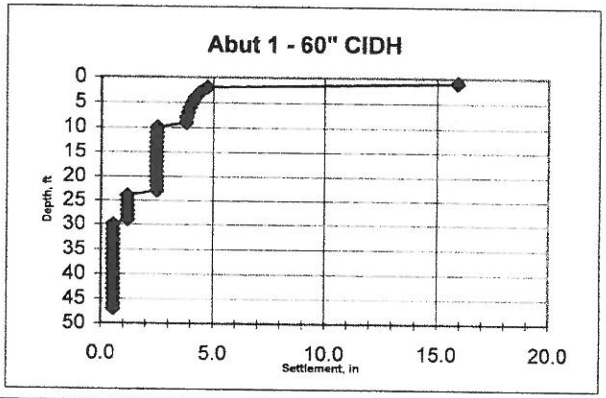

$Wt = Wc + Wbb + Wbs$

$Wt = [L/(AE)][Qh - 0.5\ Qms]$

Qms = Estimated load moblized in side resistance when the load Qh is applied to the head of the CIDH

$Wbb = Cp(Qmb)/(Bqmax)$

$wbs = [0.93+0.16SQRT(L/B)]Cp[Qms/(Lqmax)]$

$q_{max} = 0.59[N_{60}(Pa/\sigma'vb]^{0.8}\sigma'vb$

L	A	E		Qh	Qms		Wt	
ft	ft2	psi	ksf	kips	tons	kips	ft	in
0	19.6	4030000	580320	150	0.00	0.00	0.000	**0.000**
1	19.6	4030000	580320	150	0.40	0.79	0.000	**0.000**
2	19.6	4030000	580320	150	1.19	2.38	0.000	**0.000**
3	19.6	4030000	580320	150	2.38	4.75	0.000	**0.000**
4	19.6	4030000	580320	150	3.96	7.92	0.000	**0.001**
5	19.6	4030000	580320	150	5.94	11.89	0.000	**0.001**
6	19.6	4030000	580320	150	8.32	16.64	0.000	**0.001**
7	19.6	4030000	580320	150	11.09	22.19	0.000	**0.001**
8	19.6	4030000	580320	150	14.26	28.52	0.000	**0.001**
9	19.6	4030000	580320	150	18.44	36.88	0.000	**0.001**
10	19.6	4030000	580320	150	23.08	46.16	0.000	**0.001**
11	19.6	4030000	580320	150	28.19	56.37	0.000	**0.001**
12	19.6	4030000	580320	150	33.76	67.51	0.000	**0.001**
13	19.6	4030000	580320	150	39.79	79.58	0.000	**0.002**
14	19.6	4030000	580320	150	46.29	92.58	0.000	**0.002**
15	19.6	4030000	580320	150	53.25	106.50	0.000	**0.002**
16	19.6	4030000	580320	150	60.68	121.35	0.000	**0.002**
17	19.6	4030000	580320	150	68.57	137.13	0.000	**0.001**
18	19.6	4030000	580320	150	76.92	153.84	0.000	**0.001**
19	19.6	4030000	580320	150	85.74	171.48	0.000	**0.001**
20	19.6	4030000	580320	150	95.02	190.04	0.000	**0.001**
21	19.6	4030000	580320	150	104.77	209.54	0.000	**0.001**

Cp	Qmb		B	N	σ'	Pa	qmax	Wbb	
	tons	kips	ft		ksf	ksf	tsf	ft	in
0.13	314.2	628.3	5	15	0.00	2.1			
0.13	314.2	628.3	5	15	0.13	2.1	12.4	1.318	15.813
0.13	104.7	209.4	5	15	0.26	2.1	14.2	0.382	4.589
0.13	104.7	209.4	5	15	0.39	2.1	15.4	0.353	4.231
0.13	104.7	209.4	5	15	0.52	2.1	16.4	0.333	3.995
0.13	104.7	209.4	5	15	0.65	2.1	17.1	0.318	3.820
0.13	104.7	209.4	5	15	0.78	2.1	17.7	0.307	3.684
0.13	104.7	209.4	5	15	0.91	2.1	18.3	0.298	3.572
0.13	104.7	209.4	5	15	1.04	2.1	18.8	0.290	3.478
0.13	104.7	209.4	5	15	1.17	2.1	19.2	0.283	3.397
0.13	104.7	209.4	5	25	1.30	2.1	29.6	0.184	2.210
0.13	104.7	209.4	5	25	1.43	2.1	30.1	0.181	2.168
0.13	104.7	209.4	5	25	1.56	2.1	30.7	0.178	2.131
0.13	104.7	209.4	5	25	1.69	2.1	31.2	0.175	2.097
0.13	104.7	209.4	5	25	1.82	2.1	31.6	0.172	2.066
0.13	104.7	209.4	5	25	1.95	2.1	32.1	0.170	2.038
0.13	104.7	209.4	5	25	2.08	2.1	32.5	0.168	2.012
0.13	104.7	209.4	5	25	2.21	2.1	32.9	0.166	1.988
0.13	104.7	209.4	5	25	2.34	2.1	33.3	0.164	1.965
0.13	104.7	209.4	5	25	2.47	2.1	33.6	0.162	1.944
0.13	104.7	209.4	5	25	2.60	2.1	34.0	0.160	1.924
0.13	104.7	209.4	5	25	2.73	2.1	34.3	0.159	1.905

Wbb		Wt
ft	in	in
0.008	0.100	15.9
0.011	0.134	4.7
0.014	0.169	4.4
0.017	0.203	4.2
0.020	0.236	4.1
0.022	0.270	4.0
0.025	0.302	3.9
0.028	0.335	3.8
0.032	0.380	3.8
0.023	0.282	2.5
0.026	0.310	2.5
0.028	0.337	2.5
0.030	0.364	2.5
0.033	0.391	2.5
0.035	0.417	2.5
0.037	0.443	2.5
0.039	0.469	2.5
0.041	0.495	2.5
0.043	0.520	2.5
0.045	0.546	2.5
0.048	0.571	2.5

22	19.6	4030000	580320	150	114.98	229.96	0.000	**0.001**
23	19.6	4030000	580320	150	125.66	251.31	0.000	**0.001**
24	19.6	4030000	580320	150	137.67	275.33	0.000	**0.000**
25	19.6	4030000	580320	150	150.18	300.36	0.000	**0.000**
26	19.6	4030000	580320	150	161.33	322.66	0.000	**0.000**
27	19.6	4030000	580320	150	172.91	345.82	0.000	**-0.001**
28	19.6	4030000	580320	150	184.92	369.85	0.000	**-0.001**
29	19.6	4030000	580320	150	197.38	394.76	0.000	**-0.001**
30	19.6	4030000	580320	150	216.46	432.92	0.000	**-0.002**
31	19.6	4030000	580320	150	236.20	472.40	0.000	**-0.003**
32	19.6	4030000	580320	150	256.60	513.19	0.000	**-0.004**
33	19.6	4030000	580320	150	277.65	555.30	0.000	**-0.004**
34	19.6	4030000	580320	150	299.37	598.73	0.000	**-0.005**
35	19.6	4030000	580320	150	321.44	642.87	-0.001	**-0.006**
36	19.6	4030000	580320	150	343.86	687.72	-0.001	**-0.007**
37	19.6	4030000	580320	150	366.64	733.28	-0.001	**-0.008**
38	19.6	4030000	580320	150	389.77	779.54	-0.001	**-0.010**
39	19.6	4030000	580320	150	413.26	826.52	-0.001	**-0.011**
40	19.6	4030000	580320	150	437.10	874.20	-0.001	**-0.012**
41	19.6	4030000	580320	150	457.26	914.52	-0.001	**-0.013**
42	19.6	4030000	580320	150	477.72	955.44	-0.001	**-0.014**
43	19.6	4030000	580320	150	498.47	996.94	-0.001	**-0.016**
44	19.6	4030000	580320	150	519.52	1039.04	-0.001	**-0.017**
45	19.6	4030000	580320	150	540.86	1081.73	-0.002	**-0.019**
46	19.6	4030000	580320	150	562.50	1125.00	-0.002	**-0.020**
47	19.6	4030000	580320	150	584.44	1168.87	-0.002	**-0.022**

0.13	104.7	209.4	5	25	2.86	2.1	34.6	0.157	1.888	0.050	0.596	2.5
0.13	104.7	209.4	5	25	2.99	2.1	34.9	0.156	1.871	0.052	0.621	2.5
0.07	104.7	209.4	5	30	3.12	2.1	40.8	0.072	0.863	0.025	0.303	1.2
0.07	104.7	209.4	5	30	3.25	2.1	41.1	0.071	0.856	0.026	0.316	1.2
0.07	104.7	209.4	5	30	3.38	2.1	41.4	0.071	0.850	0.027	0.326	1.2
0.07	104.7	209.4	5	30	3.51	2.1	41.7	0.070	0.843	0.028	0.336	1.2
0.07	104.7	209.4	5	30	3.64	2.1	42.0	0.070	0.837	0.029	0.345	1.2
0.07	104.7	209.4	5	30	3.78	2.1	42.3	0.069	0.831	0.030	0.355	1.2
0.03	261.8	523.6	5	70	3.91	2.1	84.0	0.037	0.449	0.007	0.082	0.5
0.03	261.8	523.6	5	70	4.05	2.1	84.6	0.037	0.446	0.007	0.086	0.5
0.03	261.8	523.6	5	70	4.18	2.1	85.1	0.037	0.443	0.008	0.091	0.5
0.03	261.8	523.6	5	70	4.32	2.1	85.7	0.037	0.440	0.008	0.095	0.5
0.03	261.8	523.6	5	70	4.45	2.1	86.2	0.036	0.437	0.008	0.099	0.5
0.03	261.8	523.6	5	70	4.52	2.1	86.5	0.036	0.436	0.009	0.104	0.5
0.03	261.8	523.6	5	70	4.60	2.1	86.7	0.036	0.435	0.009	0.108	0.5
0.03	261.8	523.6	5	70	4.67	2.1	87.0	0.036	0.433	0.009	0.112	0.5
0.03	261.8	523.6	5	70	4.74	2.1	87.3	0.036	0.432	0.010	0.116	0.5
0.03	261.8	523.6	5	70	4.81	2.1	87.5	0.036	0.431	0.010	0.120	0.5
0.03	261.8	523.6	5	70	4.89	2.1	87.8	0.036	0.429	0.010	0.124	0.5
0.03	261.8	523.6	5	70	4.96	2.1	88.1	0.036	0.428	0.011	0.127	0.5
0.03	261.8	523.6	5	70	5.03	2.1	88.3	0.036	0.427	0.011	0.129	0.5
0.03	261.8	523.6	5	70	5.10	2.1	88.6	0.035	0.426	0.011	0.132	0.5
0.03	261.8	523.6	5	70	5.18	2.1	88.8	0.035	0.424	0.011	0.134	0.5
0.03	261.8	523.6	5	70	5.25	2.1	89.1	0.035	0.423	0.011	0.137	0.5
0.03	261.8	523.6	5	70	5.32	2.1	89.3	0.035	0.422	0.012	0.140	0.5
0.03	261.8	523.6	5	70	5.39	2.1	89.6	0.035	0.421	0.012	0.142	0.5

TWP Shoal Project No. 07926-22-01

Reference: Vesic (1977) - Drilled Shafts, Vol II, 1999.

Location **Bent 2**

Pile, diameter **5** ft

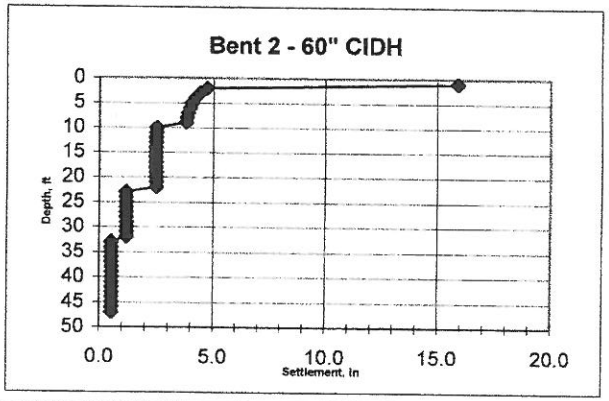

$Wt = Wc + Wbb + Wbs$

$Wt = [L/(AE)][Qh - 0.5\ Qms]$

Qms = Estimated load moblized in side resistance when the load Qh is applied to the head of the CIDH

$Wbb = Cp(Qmb)/(Bqmax)$

$wbs = [0.93+0.16SQRT(L/B)]Cp[Qms/(Lqmax)]$

$q_{max} = 0.59[N_{60}(Pa/\sigma'vb]^{0.8}\sigma'vb$

L	A	E		Qh	Qms		Wt	
ft	ft2	psi	ksf	kips	tons	kips	ft	in
0	19.6	4030000	580320	254	0.00	0.00	0.000	**0.000**
1	19.6	4030000	580320	254	0.40	0.79	0.000	**0.000**
2	19.6	4030000	580320	254	1.19	2.38	0.000	**0.001**
3	19.6	4030000	580320	254	2.38	4.75	0.000	**0.001**
4	19.6	4030000	580320	254	3.96	7.92	0.000	**0.001**
5	19.6	4030000	580320	254	5.94	11.89	0.000	**0.001**
6	19.6	4030000	580320	254	8.32	16.64	0.000	**0.002**
7	19.6	4030000	580320	254	11.09	22.19	0.000	**0.002**
8	19.6	4030000	580320	254	14.81	29.61	0.000	**0.002**
9	19.6	4030000	580320	254	18.98	37.97	0.000	**0.002**
10	19.6	4030000	580320	254	23.62	47.25	0.000	**0.002**
11	19.6	4030000	580320	254	28.73	57.46	0.000	**0.003**
12	19.6	4030000	580320	254	34.30	68.60	0.000	**0.003**
13	19.6	4030000	580320	254	40.33	80.67	0.000	**0.003**
14	19.6	4030000	580320	254	46.83	93.66	0.000	**0.003**
15	19.6	4030000	580320	254	53.79	107.59	0.000	**0.003**
16	19.6	4030000	580320	254	61.22	122.44	0.000	**0.003**
17	19.6	4030000	580320	254	69.11	138.22	0.000	**0.003**
18	19.6	4030000	580320	254	77.46	154.93	0.000	**0.003**
19	19.6	4030000	580320	254	86.28	172.57	0.000	**0.003**
20	19.6	4030000	580320	254	95.57	191.13	0.000	**0.003**
21	19.6	4030000	580320	254	105.31	210.63	0.000	**0.003**

Cp	Qmb		B	N	σ'	Pa	qmax	Wbb	
	tons	kips	ft		ksf	ksf	tsf	ft	in
0.13	314.2	628.3	5	15	0.00	2.1			
0.13	314.2	628.3	5	15	0.13	2.1	12.4	1.318	15.813
0.13	104.7	209.4	5	15	0.26	2.1	14.2	0.382	4.589
0.13	104.7	209.4	5	15	0.39	2.1	15.4	0.353	4.231
0.13	104.7	209.4	5	15	0.52	2.1	16.4	0.333	3.995
0.13	104.7	209.4	5	15	0.65	2.1	17.1	0.318	3.820
0.13	104.7	209.4	5	15	0.78	2.1	17.7	0.307	3.684
0.13	104.7	209.4	5	15	0.91	2.1	18.3	0.298	3.572
0.13	104.7	209.4	5	15	1.04	2.1	18.8	0.290	3.478
0.13	104.7	209.4	5	15	1.17	2.1	19.2	0.283	3.397
0.13	104.7	209.4	5	25	1.30	2.1	29.6	0.184	2.210
0.13	104.7	209.4	5	25	1.43	2.1	30.1	0.181	2.168
0.13	104.7	209.4	5	25	1.56	2.1	30.7	0.178	2.131
0.13	104.7	209.4	5	25	1.69	2.1	31.2	0.175	2.097
0.13	104.7	209.4	5	25	1.82	2.1	31.6	0.172	2.066
0.13	104.7	209.4	5	25	1.95	2.1	32.1	0.170	2.038
0.13	104.7	209.4	5	25	2.08	2.1	32.5	0.168	2.012
0.13	104.7	209.4	5	25	2.21	2.1	32.9	0.166	1.988
0.13	104.7	209.4	5	25	2.34	2.1	33.3	0.164	1.965
0.13	104.7	209.4	5	25	2.47	2.1	33.6	0.162	1.944
0.13	104.7	209.4	5	25	2.60	2.1	34.0	0.160	1.924
0.13	104.7	209.4	5	25	2.73	2.1	34.3	0.159	1.905

Wbb		Wt
ft	in	in
0.008	0.100	15.9
0.011	0.134	4.7
0.014	0.169	4.4
0.017	0.203	4.2
0.020	0.236	4.1
0.022	0.270	4.0
0.025	0.302	3.9
0.029	0.348	3.8
0.033	0.392	3.8
0.024	0.288	2.5
0.026	0.316	2.5
0.029	0.343	2.5
0.031	0.369	2.5
0.033	0.395	2.5
0.035	0.421	2.5
0.037	0.447	2.5
0.039	0.473	2.5
0.042	0.498	2.5
0.044	0.523	2.5
0.046	0.549	2.5
0.048	0.574	2.5

22	19.6	4030000	580320	254	115.52	231.05	0.000	**0.003**
23	19.6	4030000	580320	254	127.03	254.07	0.000	**0.003**
24	19.6	4030000	580320	254	139.05	278.09	0.000	**0.003**
25	19.6	4030000	580320	254	151.56	303.11	0.000	**0.003**
26	19.6	4030000	580320	254	162.71	325.42	0.000	**0.002**
27	19.6	4030000	580320	254	174.29	348.58	0.000	**0.002**
28	19.6	4030000	580320	254	186.30	372.60	0.000	**0.002**
29	19.6	4030000	580320	254	198.74	397.48	0.000	**0.002**
30	19.6	4030000	580320	254	211.61	423.22	0.000	**0.001**
31	19.6	4030000	580320	254	224.91	449.82	0.000	**0.001**
32	19.6	4030000	580320	254	238.65	477.30	0.000	**0.001**
33	19.6	4030000	580320	254	259.63	519.27	0.000	**0.000**
34	19.6	4030000	580320	254	281.28	562.55	0.000	**-0.001**
35	19.6	4030000	580320	254	303.58	607.15	0.000	**-0.002**
36	19.6	4030000	580320	254	326.54	653.07	0.000	**-0.003**
37	19.6	4030000	580320	254	349.85	699.70	0.000	**-0.004**
38	19.6	4030000	580320	254	373.52	747.04	0.000	**-0.005**
39	19.6	4030000	580320	254	397.54	795.08	0.000	**-0.006**
40	19.6	4030000	580320	254	421.92	843.83	-0.001	**-0.007**
41	19.6	4030000	580320	254	442.53	885.05	-0.001	**-0.008**
42	19.6	4030000	580320	254	463.43	926.86	-0.001	**-0.009**
43	19.6	4030000	580320	254	484.63	969.26	-0.001	**-0.010**
44	19.6	4030000	580320	254	506.13	1012.25	-0.001	**-0.012**
45	19.6	4030000	580320	254	527.92	1055.83	-0.001	**-0.013**
46	19.6	4030000	580320	254	550.00	1100.00	-0.001	**-0.014**
47	19.6	4030000	580320	254	572.38	1144.76	-0.001	**-0.016**

0.13	104.7	209.4	5	25	2.86	2.1	34.6	0.157	1.888
0.07	104.7	209.4	5	30	2.99	2.1	40.4	0.073	0.871
0.07	104.7	209.4	5	30	3.12	2.1	40.8	0.072	0.863
0.07	104.7	209.4	5	30	3.25	2.1	41.1	0.071	0.856
0.07	104.7	209.4	5	30	3.38	2.1	41.4	0.071	0.850
0.07	104.7	209.4	5	30	3.51	2.1	41.7	0.070	0.843
0.07	104.7	209.4	5	30	3.64	2.1	42.0	0.070	0.837
0.07	104.7	209.4	5	30	3.78	2.1	42.3	0.069	0.831
0.07	104.7	209.4	5	30	3.91	2.1	42.6	0.069	0.825
0.07	104.7	209.4	5	30	4.05	2.1	42.9	0.068	0.820
0.07	104.7	209.4	5	30	4.18	2.1	43.2	0.068	0.814
0.03	261.8	523.6	5	70	4.32	2.1	85.7	0.037	0.440
0.03	261.8	523.6	5	70	4.45	2.1	86.2	0.036	0.437
0.03	261.8	523.6	5	70	4.52	2.1	86.5	0.036	0.436
0.03	261.8	523.6	5	70	4.60	2.1	86.7	0.036	0.435
0.03	261.8	523.6	5	70	4.67	2.1	87.0	0.036	0.433
0.03	261.8	523.6	5	70	4.74	2.1	87.3	0.036	0.432
0.03	261.8	523.6	5	70	4.81	2.1	87.5	0.036	0.431
0.03	261.8	523.6	5	70	4.89	2.1	87.8	0.036	0.429
0.03	261.8	523.6	5	70	4.96	2.1	88.1	0.036	0.428
0.03	261.8	523.6	5	70	5.03	2.1	88.3	0.036	0.427
0.03	261.8	523.6	5	70	5.10	2.1	88.6	0.035	0.426
0.03	261.8	523.6	5	70	5.18	2.1	88.8	0.035	0.424
0.03	261.8	523.6	5	70	5.25	2.1	89.1	0.035	0.423
0.03	261.8	523.6	5	70	5.32	2.1	89.3	0.035	0.422
0.03	261.8	523.6	5	70	5.39	2.1	89.6	0.035	0.421

0.050	0.599	2.5
0.024	0.292	1.2
0.025	0.306	1.2
0.027	0.319	1.2
0.027	0.329	1.2
0.028	0.338	1.2
0.029	0.348	1.2
0.030	0.358	1.2
0.031	0.367	1.2
0.031	0.377	1.2
0.032	0.387	1.2
0.007	0.089	0.5
0.008	0.093	0.5
0.008	0.098	0.5
0.009	0.102	0.5
0.009	0.107	0.5
0.009	0.111	0.5
0.010	0.115	0.5
0.010	0.120	0.5
0.010	0.122	0.5
0.010	0.125	0.5
0.011	0.128	0.5
0.011	0.131	0.5
0.011	0.134	0.5
0.011	0.136	0.5
0.012	0.139	0.5

TWP Shoal Project No. 07926-22-01

Reference: Vesic (1977) - Drilled Shafts, Vol II, 1999.

Location Bent 3

Pile, diameter 5 ft

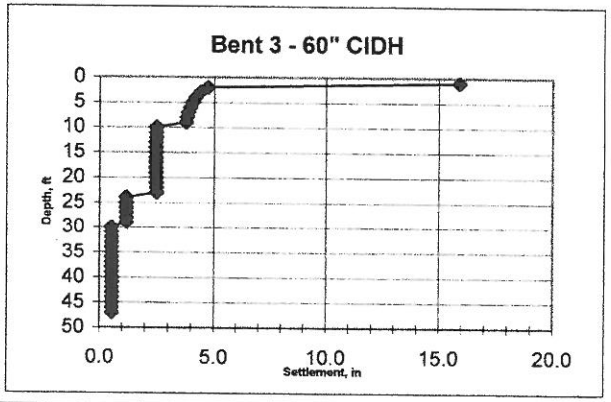

Wt = Wc + Wbb + Wbs

Wt = [L/(AE)][Qh - 0.5 Qms]

Qms = Estimated load moblized in side resistance when the load Qh is applied to the head of the CIDH

Wbb = Cp(Qmb)/(Bqmax)

wbs = [0.93+0.16SQRT(L/B)]Cp[Qms/(Lqmax)]

$q_{max} = 0.59[N_{60}(Pa/\sigma'vb]^{0.8}\sigma'vb$

L	A	E		Qh	Qms		Wt	
ft	ft2	psi	ksf	kips	tons	kips	ft	in
0	19.6	4030000	580320	316	0.00	0.00	0.000	**0.000**
1	19.6	4030000	580320	316	0.40	0.79	0.000	**0.000**
2	19.6	4030000	580320	316	1.19	2.38	0.000	**0.001**
3	19.6	4030000	580320	316	2.38	4.75	0.000	**0.001**
4	19.6	4030000	580320	316	3.96	7.92	0.000	**0.001**
5	19.6	4030000	580320	316	5.94	11.89	0.000	**0.002**
6	19.6	4030000	580320	316	8.32	16.64	0.000	**0.002**
7	19.6	4030000	580320	316	11.09	22.19	0.000	**0.002**
8	19.6	4030000	580320	316	14.26	28.52	0.000	**0.003**
9	19.6	4030000	580320	316	18.44	36.88	0.000	**0.003**
10	19.6	4030000	580320	316	23.08	46.16	0.000	**0.003**
11	19.6	4030000	580320	316	28.19	56.37	0.000	**0.003**
12	19.6	4030000	580320	316	33.76	67.51	0.000	**0.004**
13	19.6	4030000	580320	316	39.79	79.58	0.000	**0.004**
14	19.6	4030000	580320	316	46.29	92.58	0.000	**0.004**
15	19.6	4030000	580320	316	53.25	106.50	0.000	**0.004**
16	19.6	4030000	580320	316	60.68	121.35	0.000	**0.004**
17	19.6	4030000	580320	316	68.57	137.13	0.000	**0.004**
18	19.6	4030000	580320	316	76.92	153.84	0.000	**0.005**
19	19.6	4030000	580320	316	85.74	171.48	0.000	**0.005**
20	19.6	4030000	580320	316	95.02	190.04	0.000	**0.005**
21	19.6	4030000	580320	316	104.77	209.54	0.000	**0.005**

Cp	Qmb		B	N	σ'	Pa	qmax	Wbb	
	tons	kips	ft		ksf	ksf	tsf	ft	in
0.13	314.2	628.3	5	15	0.00	2.1			
0.13	314.2	628.3	5	15	0.13	2.1	12.4	1.318	15.813
0.13	104.7	209.4	5	15	0.26	2.1	14.2	0.382	4.589
0.13	104.7	209.4	5	15	0.39	2.1	15.4	0.353	4.231
0.13	104.7	209.4	5	15	0.52	2.1	16.4	0.333	3.995
0.13	104.7	209.4	5	15	0.65	2.1	17.1	0.318	3.820
0.13	104.7	209.4	5	15	0.78	2.1	17.7	0.307	3.684
0.13	104.7	209.4	5	15	0.91	2.1	18.3	0.298	3.572
0.13	104.7	209.4	5	15	1.04	2.1	18.8	0.290	3.478
0.13	104.7	209.4	5	15	1.17	2.1	19.2	0.283	3.397
0.13	104.7	209.4	5	25	1.30	2.1	29.6	0.184	2.210
0.13	104.7	209.4	5	25	1.43	2.1	30.1	0.181	2.168
0.13	104.7	209.4	5	25	1.56	2.1	30.7	0.178	2.131
0.13	104.7	209.4	5	25	1.69	2.1	31.2	0.175	2.097
0.13	104.7	209.4	5	25	1.82	2.1	31.6	0.172	2.066
0.13	104.7	209.4	5	25	1.95	2.1	32.1	0.170	2.038
0.13	104.7	209.4	5	25	2.08	2.1	32.5	0.168	2.012
0.13	104.7	209.4	5	25	2.21	2.1	32.9	0.166	1.988
0.13	104.7	209.4	5	25	2.34	2.1	33.3	0.164	1.965
0.13	104.7	209.4	5	25	2.47	2.1	33.6	0.162	1.944
0.13	104.7	209.4	5	25	2.60	2.1	34.0	0.160	1.924
0.13	104.7	209.4	5	25	2.73	2.1	34.3	0.159	1.905

Wbb		Wt
ft	in	in
0.008	0.100	15.9
0.011	0.134	4.7
0.014	0.169	4.4
0.017	0.203	4.2
0.020	0.236	4.1
0.022	0.270	4.0
0.025	0.302	3.9
0.028	0.335	3.8
0.032	0.380	3.8
0.023	0.282	2.5
0.026	0.310	2.5
0.028	0.337	2.5
0.030	0.364	2.5
0.033	0.391	2.5
0.035	0.417	2.5
0.037	0.443	2.5
0.039	0.469	2.5
0.041	0.495	2.5
0.043	0.520	2.5
0.045	0.546	2.5
0.048	0.571	2.5

22	19.6	4030000	580320	316	114.98	229.96	0.000	**0.005**
23	19.6	4030000	580320	316	125.66	251.31	0.000	**0.005**
24	19.6	4030000	580320	316	137.67	275.33	0.000	**0.005**
25	19.6	4030000	580320	316	150.18	300.36	0.000	**0.004**
26	19.6	4030000	580320	316	161.33	322.66	0.000	**0.004**
27	19.6	4030000	580320	316	172.91	345.82	0.000	**0.004**
28	19.6	4030000	580320	316	184.92	369.85	0.000	**0.004**
29	19.6	4030000	580320	316	197.38	394.76	0.000	**0.004**
30	19.6	4030000	580320	316	216.46	432.92	0.000	**0.003**
31	19.6	4030000	580320	316	236.20	472.40	0.000	**0.003**
32	19.6	4030000	580320	316	256.60	513.19	0.000	**0.002**
33	19.6	4030000	580320	316	277.65	555.30	0.000	**0.001**
34	19.6	4030000	580320	316	299.37	598.73	0.000	**0.001**
35	19.6	4030000	580320	316	321.44	642.87	0.000	**0.000**
36	19.6	4030000	580320	316	343.86	687.72	0.000	**-0.001**
37	19.6	4030000	580320	316	366.64	733.28	0.000	**-0.002**
38	19.6	4030000	580320	316	389.77	779.54	0.000	**-0.003**
39	19.6	4030000	580320	316	413.26	826.52	0.000	**-0.004**
40	19.6	4030000	580320	316	437.10	874.20	0.000	**-0.005**
41	19.6	4030000	580320	316	457.26	914.52	-0.001	**-0.006**
42	19.6	4030000	580320	316	477.72	955.44	-0.001	**-0.007**
43	19.6	4030000	580320	316	498.47	996.94	-0.001	**-0.008**
44	19.6	4030000	580320	316	519.52	1039.04	-0.001	**-0.009**
45	19.6	4030000	580320	316	540.86	1081.73	-0.001	**-0.011**
46	19.6	4030000	580320	316	562.50	1125.00	-0.001	**-0.012**
47	19.6	4030000	580320	316	584.44	1168.87	-0.001	**-0.013**

0.13	104.7	209.4	5	25	2.86	2.1	34.6	0.157	1.888
0.13	104.7	209.4	5	25	2.99	2.1	34.9	0.156	1.871
0.07	104.7	209.4	5	30	3.12	2.1	40.8	0.072	0.863
0.07	104.7	209.4	5	30	3.25	2.1	41.1	0.071	0.856
0.07	104.7	209.4	5	30	3.38	2.1	41.4	0.071	0.850
0.07	104.7	209.4	5	30	3.51	2.1	41.7	0.070	0.843
0.07	104.7	209.4	5	30	3.64	2.1	42.0	0.070	0.837
0.07	104.7	209.4	5	30	3.78	2.1	42.3	0.069	0.831
0.03	261.8	523.6	5	70	3.91	2.1	84.0	0.037	0.449
0.03	261.8	523.6	5	70	4.05	2.1	84.6	0.037	0.446
0.03	261.8	523.6	5	70	4.18	2.1	85.1	0.037	0.443
0.03	261.8	523.6	5	70	4.32	2.1	85.7	0.037	0.440
0.03	261.8	523.6	5	70	4.45	2.1	86.2	0.036	0.437
0.03	261.8	523.6	5	70	4.52	2.1	86.5	0.036	0.436
0.03	261.8	523.6	5	70	4.60	2.1	86.7	0.036	0.435
0.03	261.8	523.6	5	70	4.67	2.1	87.0	0.036	0.433
0.03	261.8	523.6	5	70	4.74	2.1	87.3	0.036	0.432
0.03	261.8	523.6	5	70	4.81	2.1	87.5	0.036	0.431
0.03	261.8	523.6	5	70	4.89	2.1	87.8	0.036	0.429
0.03	261.8	523.6	5	70	4.96	2.1	88.1	0.036	0.428
0.03	261.8	523.6	5	70	5.03	2.1	88.3	0.036	0.427
0.03	261.8	523.6	5	70	5.10	2.1	88.6	0.035	0.426
0.03	261.8	523.6	5	70	5.18	2.1	88.8	0.035	0.424
0.03	261.8	523.6	5	70	5.25	2.1	89.1	0.035	0.423
0.03	261.8	523.6	5	70	5.32	2.1	89.3	0.035	0.422
0.03	261.8	523.6	5	70	5.39	2.1	89.6	0.035	0.421

0.050	0.596	2.5
0.052	0.621	2.5
0.025	0.303	1.2
0.026	0.316	1.2
0.027	0.326	1.2
0.028	0.336	1.2
0.029	0.345	1.2
0.030	0.355	1.2
0.007	0.082	0.5
0.007	0.086	0.5
0.008	0.091	0.5
0.008	0.095	0.5
0.008	0.099	0.5
0.009	0.104	0.5
0.009	0.108	0.5
0.009	0.112	0.5
0.010	0.116	0.5
0.010	0.120	0.5
0.010	0.124	0.5
0.011	0.127	0.5
0.011	0.129	0.5
0.011	0.132	0.5
0.011	0.134	0.5
0.011	0.137	0.5
0.012	0.140	0.5
0.012	0.142	0.5

TWP Shoal Project No. 07926-22-01

Reference: Vesic (1977) - Drilled Shafts, Vol II, 1999.

Location **Bent 4**

Pile, diameter **5 ft**

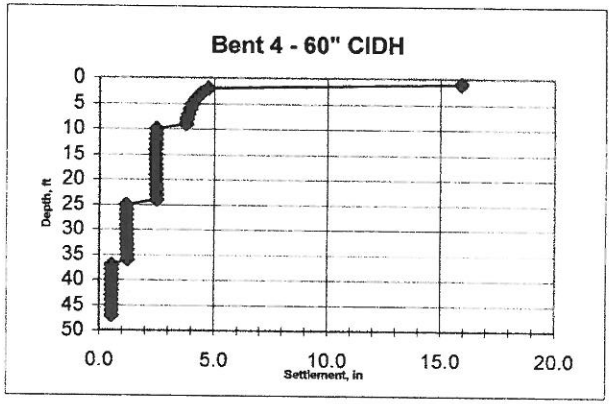

$Wt = Wc + Wbb + Wbs$

$Wt = [L/(AE)][Qh - 0.5\ Qms]$

Qms = Estimated load moblized in side resistance when the load Qh is applied to the head of the CIDH

$Wbb = Cp(Qmb)/(Bqmax)$

$wbs = [0.93+0.16SQRT(L/B)]Cp[Qms/(Lqmax)]$

$q_{max} = 0.59[N_{60}(Pa/\sigma'vb]^{0.8}\sigma'vb$

L	A	E		Qh	Qms		Wt	
ft	ft2	psi	ksf	kips	tons	kips	ft	in
0	19.6	4030000	580320	395	0.00	0.00	0.000	**0.000**
1	19.6	4030000	580320	395	0.40	0.79	0.000	**0.000**
2	19.6	4030000	580320	395	1.19	2.38	0.000	**0.001**
3	19.6	4030000	580320	395	2.38	4.75	0.000	**0.001**
4	19.6	4030000	580320	395	3.96	7.92	0.000	**0.002**
5	19.6	4030000	580320	395	5.94	11.89	0.000	**0.002**
6	19.6	4030000	580320	395	8.32	16.64	0.000	**0.002**
7	19.6	4030000	580320	395	11.09	22.19	0.000	**0.003**
8	19.6	4030000	580320	395	14.26	28.52	0.000	**0.003**
9	19.6	4030000	580320	395	17.83	35.66	0.000	**0.004**
10	19.6	4030000	580320	395	22.47	44.94	0.000	**0.004**
11	19.6	4030000	580320	395	27.57	55.15	0.000	**0.004**
12	19.6	4030000	580320	395	33.14	66.29	0.000	**0.005**
13	19.6	4030000	580320	395	39.18	78.36	0.000	**0.005**
14	19.6	4030000	580320	395	45.68	91.35	0.000	**0.005**
15	19.6	4030000	580320	395	52.64	105.28	0.000	**0.005**
16	19.6	4030000	580320	395	60.06	120.13	0.000	**0.006**
17	19.6	4030000	580320	395	67.95	135.91	0.000	**0.006**
18	19.6	4030000	580320	395	76.31	152.62	0.001	**0.006**
19	19.6	4030000	580320	395	85.13	170.26	0.001	**0.006**
20	19.6	4030000	580320	395	94.41	188.82	0.001	**0.006**
21	19.6	4030000	580320	395	104.16	208.32	0.001	**0.006**

Cp	Qmb		B	N	σ'	Pa	qmax	Wbb	
	tons	kips	ft		ksf	ksf	tsf	ft	in
0.13	314.2	628.3	5	15	0.00	2.1			
0.13	314.2	628.3	5	15	0.13	2.1	12.4	1.318	15.813
0.13	104.7	209.4	5	15	0.26	2.1	14.2	0.382	4.589
0.13	104.7	209.4	5	15	0.39	2.1	15.4	0.353	4.231
0.13	104.7	209.4	5	15	0.52	2.1	16.4	0.333	3.995
0.13	104.7	209.4	5	15	0.65	2.1	17.1	0.318	3.820
0.13	104.7	209.4	5	15	0.78	2.1	17.7	0.307	3.684
0.13	104.7	209.4	5	15	0.91	2.1	18.3	0.298	3.572
0.13	104.7	209.4	5	15	1.04	2.1	18.8	0.290	3.478
0.13	104.7	209.4	5	15	1.17	2.1	19.2	0.283	3.397
0.13	104.7	209.4	5	25	1.30	2.1	29.6	0.184	2.210
0.13	104.7	209.4	5	25	1.43	2.1	30.1	0.181	2.168
0.13	104.7	209.4	5	25	1.56	2.1	30.7	0.178	2.131
0.13	104.7	209.4	5	25	1.69	2.1	31.2	0.175	2.097
0.13	104.7	209.4	5	25	1.82	2.1	31.6	0.172	2.066
0.13	104.7	209.4	5	25	1.95	2.1	32.1	0.170	2.038
0.13	104.7	209.4	5	25	2.08	2.1	32.5	0.168	2.012
0.13	104.7	209.4	5	25	2.21	2.1	32.9	0.166	1.988
0.13	104.7	209.4	5	25	2.34	2.1	33.3	0.164	1.965
0.13	104.7	209.4	5	25	2.47	2.1	33.6	0.162	1.944
0.13	104.7	209.4	5	25	2.60	2.1	34.0	0.160	1.924
0.13	104.7	209.4	5	25	2.73	2.1	34.3	0.159	1.905

Wbb		Wt
ft	in	in
0.008	0.100	15.9
0.011	0.134	4.7
0.014	0.169	4.4
0.017	0.203	4.2
0.020	0.236	4.1
0.022	0.270	4.0
0.025	0.302	3.9
0.028	0.335	3.8
0.031	0.368	3.8
0.023	0.274	2.5
0.025	0.303	2.5
0.028	0.331	2.5
0.030	0.358	2.5
0.032	0.386	2.5
0.034	0.412	2.5
0.037	0.439	2.5
0.039	0.465	2.5
0.041	0.491	2.5
0.043	0.516	2.5
0.045	0.542	2.5
0.047	0.568	2.5

22	19.6	4030000	580320	395	114.37	228.74	0.001	**0.007**
23	19.6	4030000	580320	395	125.04	250.09	0.001	**0.007**
24	19.6	4030000	580320	395	136.18	272.37	0.001	**0.007**
25	19.6	4030000	580320	395	148.69	297.39	0.001	**0.006**
26	19.6	4030000	580320	395	159.85	319.69	0.001	**0.006**
27	19.6	4030000	580320	395	171.43	342.86	0.001	**0.006**
28	19.6	4030000	580320	395	183.44	366.88	0.001	**0.006**
29	19.6	4030000	580320	395	195.88	391.76	0.001	**0.006**
30	19.6	4030000	580320	395	208.75	417.50	0.000	**0.006**
31	19.6	4030000	580320	395	222.05	444.09	0.000	**0.006**
32	19.6	4030000	580320	395	235.77	471.54	0.000	**0.005**
33	19.6	4030000	580320	395	249.93	499.86	0.000	**0.005**
34	19.6	4030000	580320	395	264.51	529.02	0.000	**0.005**
35	19.6	4030000	580320	395	279.34	558.67	0.000	**0.004**
36	19.6	4030000	580320	395	294.40	588.80	0.000	**0.004**
37	19.6	4030000	580320	395	317.03	634.06	0.000	**0.003**
38	19.6	4030000	580320	395	340.02	680.03	0.000	**0.002**
39	19.6	4030000	580320	395	363.36	726.72	0.000	**0.001**
40	19.6	4030000	580320	395	387.05	774.10	0.000	**0.000**
41	19.6	4030000	580320	395	407.09	814.19	0.000	**-0.001**
42	19.6	4030000	580320	395	427.43	854.86	0.000	**-0.001**
43	19.6	4030000	580320	395	448.06	896.12	0.000	**-0.002**
44	19.6	4030000	580320	395	468.99	937.97	0.000	**-0.003**
45	19.6	4030000	580320	395	490.21	980.41	0.000	**-0.005**
46	19.6	4030000	580320	395	511.72	1023.45	0.000	**-0.006**
47	19.6	4030000	580320	395	533.54	1067.07	-0.001	**-0.007**

0.13	104.7	209.4	5	25	2.86	2.1	34.6	0.157	1.888
0.13	104.7	209.4	5	25	2.99	2.1	34.9	0.156	1.871
0.13	104.7	209.4	5	25	3.12	2.1	35.2	0.155	1.855
0.07	104.7	209.4	5	30	3.25	2.1	41.1	0.071	0.856
0.07	104.7	209.4	5	30	3.38	2.1	41.4	0.071	0.850
0.07	104.7	209.4	5	30	3.51	2.1	41.7	0.070	0.843
0.07	104.7	209.4	5	30	3.64	2.1	42.0	0.070	0.837
0.07	104.7	209.4	5	30	3.78	2.1	42.3	0.069	0.831
0.07	104.7	209.4	5	30	3.91	2.1	42.6	0.069	0.825
0.07	104.7	209.4	5	30	4.05	2.1	42.9	0.068	0.820
0.07	104.7	209.4	5	30	4.18	2.1	43.2	0.068	0.814
0.07	104.7	209.4	5	30	4.32	2.1	43.5	0.067	0.809
0.07	104.7	209.4	5	30	4.45	2.1	43.8	0.067	0.804
0.07	104.7	209.4	5	30	4.52	2.1	43.9	0.067	0.802
0.07	104.7	209.4	5	30	4.60	2.1	44.0	0.067	0.799
0.03	261.8	523.6	5	70	4.67	2.1	87.0	0.036	0.433
0.03	261.8	523.6	5	70	4.74	2.1	87.3	0.036	0.432
0.03	261.8	523.6	5	70	4.81	2.1	87.5	0.036	0.431
0.03	261.8	523.6	5	70	4.89	2.1	87.8	0.036	0.429
0.03	261.8	523.6	5	70	4.96	2.1	88.1	0.036	0.428
0.03	261.8	523.6	5	70	5.03	2.1	88.3	0.036	0.427
0.03	261.8	523.6	5	70	5.10	2.1	88.6	0.035	0.426
0.03	261.8	523.6	5	70	5.18	2.1	88.8	0.035	0.424
0.03	261.8	523.6	5	70	5.25	2.1	89.1	0.035	0.423
0.03	261.8	523.6	5	70	5.32	2.1	89.3	0.035	0.422
0.03	261.8	523.6	5	70	5.39	2.1	89.6	0.035	0.421

0.049	0.593	2.5
0.052	0.618	2.5
0.054	0.644	2.5
0.026	0.313	1.2
0.027	0.323	1.2
0.028	0.333	1.2
0.029	0.343	1.2
0.029	0.353	1.2
0.030	0.362	1.2
0.031	0.372	1.2
0.032	0.382	1.2
0.033	0.392	1.2
0.034	0.402	1.2
0.034	0.413	1.2
0.035	0.424	1.2
0.008	0.097	0.5
0.008	0.101	0.5
0.009	0.106	0.5
0.009	0.110	0.5
0.009	0.113	0.5
0.010	0.116	0.5
0.010	0.119	0.5
0.010	0.121	0.5
0.010	0.124	0.5
0.011	0.127	0.5
0.011	0.130	0.5

APPENDIX K

Certificate for Permanent Water Quality Improvements

.

Kimley-Horn
and Associates, Inc.

Memorandum

Suite 600
401 B Street
San Diego, California
92101

To: Mark Koll, City of San Diego

From: Tammie Moreno, Kimley-Horn and Associates

Date: May 4, 2010

Subject: Permanent Stormwater BMPs for Ted Williams Parkway Pedestrian Overcrossing at Shoal Creek Road

The Ted Williams Parkway Pedestrian Overcrossing at Shoal Creek Road is located in the City of San Diego. This project proposes the construction of a pedestrian bridge over Ted Williams Parkway on the east side of Shoal Creek Drive to provide access by foot or bike to Shoal Creek Elementary School for students. Per the Storm Water Requirements Applicability Checklist (Form DS-560), this project is subject to Standard Permanent Best Management Practices (BMP) Requirements. The purpose of this memo is to document the potential pollutants generated from the project and the Permanent Stormwater BMPs that are implemented.

The anticipated pollutants from the pedestrian bridge include trash and debris caused by littering and food waste. The project falls within the Penasquitos Hydrologic Unit which drains to the Los Penasquitos Creek and eventually to the Los Penasquitos Lagoon. The Los Penasquitos Creek and Penasquitos Lagoon are listed on the 2006 Clean Water Act Section 303(d) List of Water Quality Limited Segments. Los Penasquitos Creek is impaired for phosphate and total dissolved solids. Penasquitos Lagoon is impaired for sediment/siltation. Currently, there are not TMDLs set; however, TMDL completion is proposed for 2019.

The proposed project will not generate additional pollutants that cause downstream impairment. Phosphorus is typically found in fertilizers and eroded soils. Sediments and siltation is also caused by eroded soils. Total dissolved solids consist of organic and inorganic substances which may be caused by fertilizers, pesticides, or eroded soil. This project proposes to replace existing landscape which has been disturbed during construction. Minimal landscape will be added in place of the existing sidewalk and around proposed bridge abutment; however, the additional landscape will be underneath the bridge ramp and will not directly contact stormwater. All landscape is proposed with drought tolerant plants which reduce watering and the potential for sediment, fertilizer, and pesticide runoff. Proposed fertilizer and pesticide application will remain the same as existing conditions.

This project is subject to standard Low Impact Development (LID) and Source Control BMPs. LID is a development strategy which conserves natural features of the site and

TEL 619 234 9411
FAX 619 234 9412

manages stormwater pollutants at the source. The pedestrian bridge has been designed to the minimum impervious footprint while meeting Americans with Disabilities Act (ADA) standards. By reducing the impervious surface, pollutants are also reduced because there is less stormwater runoff. The pedestrian bridge and ramps is located adjacent to a steep hillside, runoff from the hillside has been designed to be conveyed safely from slopes with a ditch. Soil compaction will be minimized in landscape area along with soil amendments to the landscape topsoil to retain moisture. The disturbed slope adjacent to the pedestrian bridge will be vegetated with drought tolerant landscape. Drought tolerant plants have been selected for all landscape.

Source Control BMPs for the project will include inlet stencils with prohibitive language (e.f., "No Dumping, I Live Downstream") on proposed storm drain inlets on the pedestrian bridge. Efficient irrigation systems and landscape design will also be integrated into the project. Overwatering is the typical cause of fertilizers and pesticides running into storm drains. Drought tolerant plants and efficient irrigation will be implemented on the site to reduce runoff from overwatering. Sidewalk and street sweeping will continue as in existing conditions to minimize pollutants contacting stormwater.

The Ted Williams Parkway Pedestrian Overcrossing at Shoal Creek Road generates trash and debris but will not generate additional pollutants causing downstream impairment. This project will implement Permanent Source BMPs including LID and Source Control BMPs to reduce pollutant generation.

Attachments:
Form DS-5610

K:\SND_TPTO\095279013\Reports\Stormwater\Ted Williams Pkwy & Shoal Creek Permanent BMP Memo.doc

think BLUE
SAN DIEGO

CERTIFICATION FOR PERMANENT WATER QUALITY IMPROVEMENTS
[Storm Water Best Management Practices (BMPs)]

1.) Project Title: Ted Williams Parkway Pedestrian Overcrossing at Shoal Creek Road

2.) Submitted by: Mark Koll/ROW Division
(Project Manager/Division/Dept.)

3.) Dwg. # 35490 WBS #: S-00941

4.) GPS Coordinates (of water quality improvement): N 1933407
E 6306924

5.) Brief description of project: ☒ - attachments (include as necessary)

6.) Potential pollutants generated by project: ☒ - attachments

7.) Brief description of water quality improvements, including treatment controls, to be constructed to address the potential pollutants identified in #6 above: ☒ - attachments

I hereby declare that I am the **Engineer of Work/City's Representative** (circle one) for this project and that I have read and understand the City of San Diego's Storm Water Standards Manual as it pertains to this project. I have exercised responsible charge over the design of the project as defined in Section 6703 of the Business and Professional Code and that the design is consistent with current standards.

Engineer of Work:

Tammie Moreno
Name (Engineer of Work)

74417 09-30-11
Registration Number and Expiration Date

Kimley-Horn and Associates
Company/Agency

401 B Street Suite 600
Address

Tammie.moreno@kimley-horn.com **619-234-9411**
E-mail Address **Telephone No.**

Tammie Moreno 5-4-10
Signature **Date**

Mark L. Koll 5-5-10
City's Representative for Acceptance of Design **Date**

REGISTRATION SEAL

**** Submit completed form to: Storm Water Pollution Prevention Program, MS 1900 ****

APPENDIX L

Storm Water Requriements Applicability Checklist

THE CITY OF SAN DIEGO City of San Diego **Development Services** 1222 First Ave., MS-302 San Diego, CA 92101 (619) 446-5000	**Storm Water Requirements Applicability Checklist**	**FORM** **DS-560** OCTOBER 2008

Project Address:	Assessor Parcel Number(s):	Project Number *(for City Use Only)*
Ted Williams Parkway and Shoal Creek Dr.	3137612300	

Complete Sections 1 and 2 of the following checklist to determine your project's permanent and construction storm water best management practices requirements. This form must be completed and submitted with your permit application.

Section 1 - Permanent Storm Water BMP Requirements:

If any answers to Part A are answered "Yes," your project is subject to the "Priority Project Permanent Storm Water BMP Requirements," and "Standard Permanent Storm Water BMP Requirements" of the Storm Water Standards Manual, Section III, "Permanent Storm Water BMP Selection Procedure." If all answers to Part A are "No," and any answers to Part B are "Yes," your project is only subject to the Standard Permanent Storm Water BMP Requirements. If every question in Part A and B is answered "No," your project is exempt from permanent storm water requirements.

Part A: Determine Priority Project Permanent Storm Water BMP Requirements.

Does the project meet the definition of one or more of the priority project categories?*	
1. Detached or attached residential development of 10 or more units	☐ Yes ☑ No
2. Developments of heavy industy greater than 1 acre	☐ Yes ☑ No
3. Commercial development greater than 1 acre	☐ Yes ☑ No
4. Automotive repair shop	☐ Yes ☑ No
5. Restaurant	☐ Yes ☑ No
6. Hillside development greater than 5,000 square feet	☐ Yes ☑ No
7. Project within, directly adjacent to or discharging to receiving waters within Water Quality Sensitive Areas	☐ Yes ☑ No
8. Parking lots greater than or equal to 5,000 square feet or with at least 15 parking spaces, and potentially exposed to urban runoff	☐ Yes ☑ No
9. Streets, roads, highways, and freeways which would create a new paved surface that is 5,000 square feet or greater	☐ Yes ☑ No
10. Significant redevelopment over 5,000 square feet where the development site falls under one of the other project categories on this list.	☐ Yes ☑ No
11. Retail gasoline outlets	☐ Yes ☑ No

** Refer to the definitions section in the* Storm Water Standards *for expanded definitions of the priority project categories.*

Limited Exclusion: *Trenching and resurfacing work associated with utility projects are not considered priority projects. Parking lots, buildings and other structures associated with utility projects are priority projects if one or more of the criteria in Part A is met. If all answers to Part A are "No", continue to Part B.*

Part B: Determine Standard Permanent Storm Water Requirements.

Does the project propose:	
1. New impervious areas, such as rooftops, roads, parking lots, driveways, paths and sidewalks?	☑ Yes ☐ No
2. New pervious landscape areas and irrigation systems?	☑ Yes ☐ No
3. Permanent structures within 100 feet of any natural water body?	☐ Yes ☑ No
4. Trash storage areas?	☐ Yes ☑ No
5. Liquid or solid material loading and unloading areas?	☐ Yes ☑ No
6. Vehicle or equipment fueling, washing, or maintenance areas?	☐ Yes ☑ No

7.	Require a General NPDES Permit for Storm Water Discharges Associated with Industrial Activities (Except construction)?*	☐ Yes ☑ No
8.	Commercial or industrial waste handling or storage, excluding typical office or household waste?	☐ Yes ☑ No
9.	Any grading or ground disturbance during construction?	☑ Yes ☐ No
10.	Any new storm drains, or alteration to existing storm drains?	☐ Yes ☑ No

*To find out if your project is required to obtain an individual General NPDES Permit for Storm Water Discharges Associated with Industrial Activities, visit the State Water Resources Control Board web site at, www.swrcb.ca.gov/stormwtr/industrial.html

Section 2. Construction Storm Water BMP Requirements:

If the answer to question 1 of Part C is answered "Yes," your project is subject to Section IV of the Storm Water Standards Manual, "Construction Storm Water BMP Performance Standards," and must prepare a Storm Water Pollution Prevention Plan (SWPPP). If the answer to question 1of Part C is "No," but the answer to any of the remaining questions is "Yes," your project is subject to Section IV of the Storm Water Standards Manual, "Construction Storm Water BMP Performance Standards," and must prepare a Water Pollution Control Plan (WPCP). If every question in Part C is answered "No," your project is exempt from any construction storm water BMP requirements. If any of the answers to the questions in Part C are "Yes," complete the construction site prioritization in Part D below.

Part C: Determine Construction Phase Storm Water Requirements.

Would the project meet any of these criteria during construction?

1.	Is the project subject to California's statewide General NPDES Permit for Storm Water Discharges Associated with Construction Activities?	☐ Yes ☑ No
2.	Does the project propose grading or soil disturbance?	☑ Yes ☐ No
3.	Would storm water or urban runoff have the potential to contact any portion of the construction area, including washing and staging areas?	☑ Yes ☐ No
4.	Would the project use any construction materials that could negatively affect water quality if discharged from the site (such as, paints, solvents, concrete, and stucco)?	☑ Yes ☐ No

Part D: Determine Construction Site Priority

In accordance with the Municipal Permit, each construction site with construction storm water BMP requirements must be designated with a priority: high, medium or low. This prioritization must be completed with this form, noted on the plans, and included in the SWPPP or WPCP. Indicate the project's priority in one of the check boxes using the criteria below, and existing and surrounding conditions of the project, the type of activities necessary to complete the construction and any other extenuating circumstances that may pose a threat to water quality. The City reserves the right to adjust the priority of the projects both before and during construction. [Note: The construction priority does NOT change construction BMP requirements that apply to projects; all construction BMP requirements must be identified on a case-by-case basis. The construction priority does affect the frequency of inspections that will be conducted by City staff. See Section IV.1 for more details on construction BMP requirements.]

☐ 1) High Priority

a) Projects where the site is 50 acres or more and grading will occur during the wet season

b) Projects 1 acre or more and tributary to an impaired water body for sediment (e.g., Peñasquitos watershed)

c) Projects 1 acre or more within or directly adjacent to or discharging directly to a coastal lagoon or other receiving water within a Water Quality Sensitive Area.

d) Projects subject to phased grading or advanced treatment requirements.

☐ 2) Medium Priority

Projects 1 acre or more but not subject to a high priority designation.

☑ 3) Low Priority

Projects requiring a Water Pollution Control Plan but not subject to a medium or high priority designation.

Name of Owner or Agent *(Please Print)*:	Title:
Mark Koll	Associate Engineer
Signature:	Date:
	8/14/09

APPENDIX M

Transportation Management Plan

TEMPORARY CONSTRUCTION STAGING AREA PERMIT AND SCHOOL ZONE RESTRICTIONS

The CARMEL MOUNTAIN RANCH RESIDENTIAL COMMUNITY ASSOCIATION, a California non-profit public benefit corporation ("Property Owner"), is the owner of that certain parcel of vacant land currently identified by San Diego County Assessor's Parcel Number 313-750-02, the boundaries of which are shown and outlined in red on the attached Exhibit "A" - Assessor's Parcel Map, which by this reference is incorporated herein and made a part hereof. Property Owner hereby grants to THE CITY OF SAN DIEGO, a California municipal corporation ("City"), its agents or employees, permission to enter upon and utilize a portion of the hereinabove described property for the following purpose and subject to the following restrictions:

TEMPORARY CONSTRUCTION STAGING AREA ("Staging Area")

The Staging Area shall be used to support construction of the Ted Williams Parkway Pedestrian Overcrossing at Shoal Creek Drive ("Project") and shall be located as shown on the attached Exhibit "B" – Temporary Construction Staging Area, which by this reference is incorporated herein and made a part hereof.

It is understood and agreed that the permission herein granted shall terminate upon the date of (i) completion of the Project, which completion date shall be determined by the City Engineer; (ii) termination of the Project.

City's contractor shall carry liability insurance as required in Standard Specifications for Public Works Construction, 2009 Edition, as amended by City of San Diego Supplemental Amendments and shall name Property Owner as an additional insured.

SCHOOL ZONE RESTRICTIONS

The Project is located within a school zone and the safety of children walking and bicycling through the Project is of paramount concern. The safety of the children surpasses all other matters with regard to the planning, design, construction and use of the Project. The following criteria are not set forth as limitations or safe harbors with respect to the overall obligation to provide children safe travel through the Project, but rather serve as minimal guidelines with respect to safety. With respect to the school zone restrictions, the term "Project" includes the area shown on Exhibits A and B attached hereto as well as Shoal Creek Drive between Grosse Point Drive and Stoney Gate Place as well as that portion of Ted Williams Parkway intersecting Shoal Creek Drive and extending 200 feet in either direction along with the sidewalks, pathways and crosswalks adjacent to all of said streets.

a) All vehicles involved with the Project, construction or otherwise, shall not exceed 15 miles per hour while traversing Shoal Creek Drive. Traffic safety personnel, devices and other related items shall be used to restrict traffic speed.

b) Prior to commencement of any construction, an industrial style chain link fence of at least eight (8) feet in height with windscreen (privacy screen) shall be erected around the perimeter of the Staging Area. The gate through the fence shall be locked at all times except during actual ingress and egress.

c) No vehicle ingress or egress into the Staging Area shall be permitted; (i) between 7:30 a.m. and 8:30 a.m. Monday through Friday; and (ii) between 2:15 p.m. and 3:15 p.m. Monday through Thursday and between 12:30 and 1:30 on Fridays. These times may need to be varied depending on school schedules.

d) No hazardous materials (as defined by any federal, state or local law as being hazardous, toxic or otherwise harmful to human beings) shall be used or stored in the Project.

e) No construction materials or equipment shall be placed on any sidewalk or path in the Project.

f) Appropriate barriers shall be erected along all sidewalks, pathways and crossings to the extent necessary to protect children from construction related facilities or occurrences.

g) All contractors, suppliers and service providers entering the Project area shall comply with all Federal, State and Local laws with respect to the safety of children in a school zone.

h) All contractor, suppliers, and service providers entering the Project shall designate a specific contact person to be notified in the event the criteria set forth above needs to be modified. The contact person's information shall be provided to Carmel Mountain Ranch Residential Community Association at c/o Ms. Lee Leibenson, Walters Management, 9655 Chesapeake Dr., Suite 300, San Diego, CA 92123, (858) 576-5557, lleibenson@waltersmanagement.com, and Libby Keller, Principal, Shoal Creek Elementary School, (858) 613-9080, www.powayusd.com/pusdsces/.

City shall indemnify, protect, defend and hold harmless Property Owner, its agents, representatives, heirs, successors and assigns, against any and all claims, actions, or demands, costs or expense, including reasonable attorney's fees, arising out of or in any way connected to any activities of City, its agents, representatives, heirs, successors, assigns or invitees arising out of its work within the Project or use of Staging Area, excluding therefrom claims resulting from the negligence or willful misconduct of Grantor.

Date: 3/22/11

CARMEL MOUNTAIN RANCH RESIDENTIAL COMMUNITY ASSOCIATION, a California non-profit public benefit corporation

BY: _____
Ronald A. Beck
President

Date: 6/16/11

THE CITY OF SAN DIEGO, a California municipal corporation

BY: _____
James F. Barwick, CCIM
Director, Real Estate Assets

FLR
3/16/11
I:Support Staff Group\WPO\2011\REALE\PERMIT - CMR RES COMMUNITY ASSN TEMP CONSTRUCTION STAGING AREA.doc

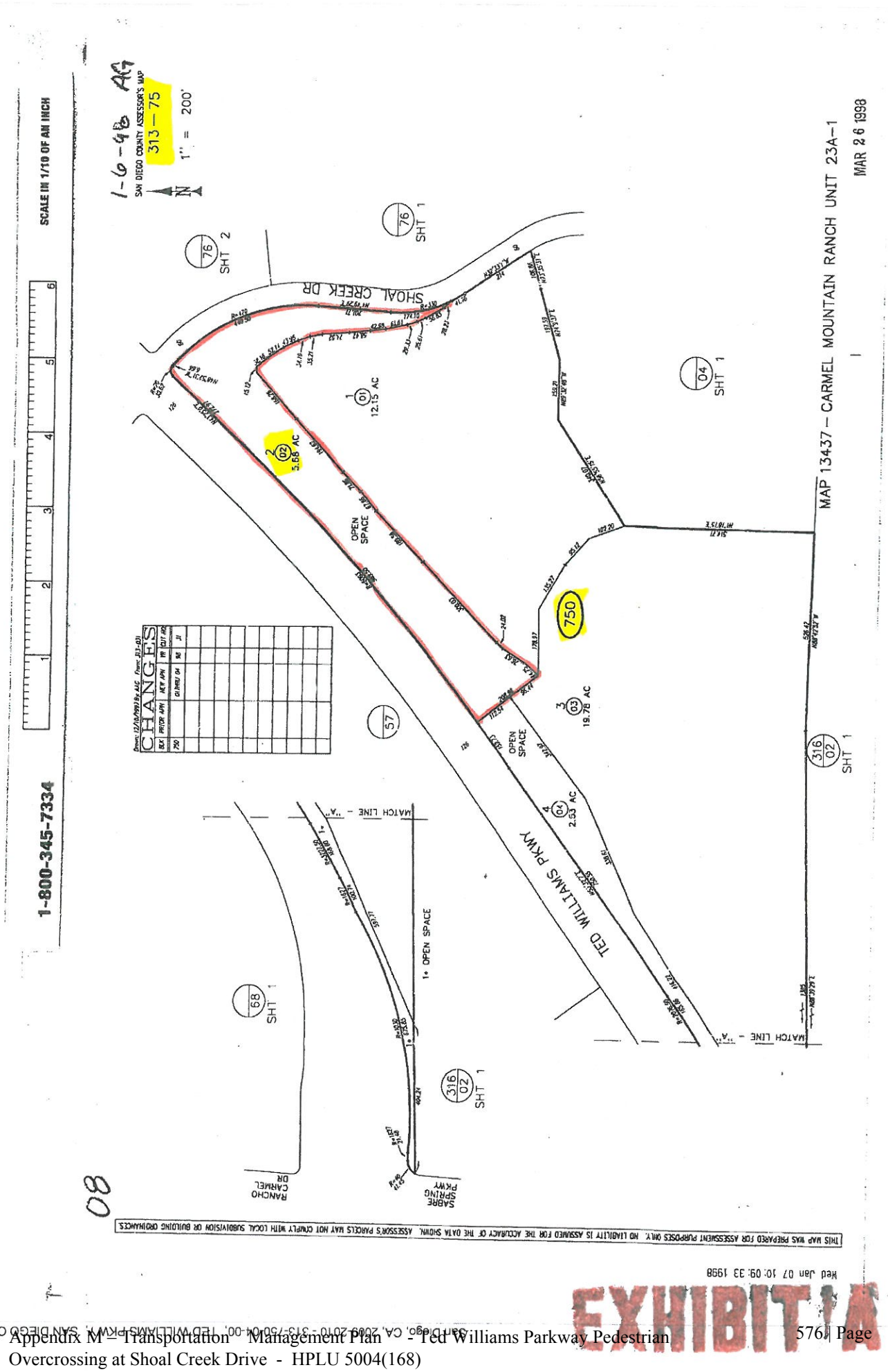
1-800-345-7334
SCALE IN 1/10 OF AN INCH
1-6-98 AG
SAN DIEGO COUNTY ASSESSOR'S MAP
313 – 75
1" = 200'
MAP 13437 – CARMEL MOUNTAIN RANCH UNIT 23A-1
MAR 26 1998
SHOAL CREEK DR
TED WILLIAMS PKWY
OPEN SPACE
12.15 AC
5.68 AC
19.78 AC
2.53 AC
750
CHANGES
MATCH LINE – "A"
1+ OPEN SPACE
RANCHO CARMEL DR
SABRE SPRING PKWY
THIS MAP WAS PREPARED FOR ASSESSMENT PURPOSES ONLY. NO LIABILITY IS ASSUMED FOR THE ACCURACY OF THE DATA SHOWN. ASSESSOR'S PARCELS MAY NOT COMPLY WITH LOCAL SUBDIVISION OR BUILDING ORDINANCES.
Wed Jan 07 10:09:33 1998
08
EXHIBIT A

Ted Williams Parkway Pedestrian Overcrossing at Shoal Creek Drive

Temporary Construction Staging Area

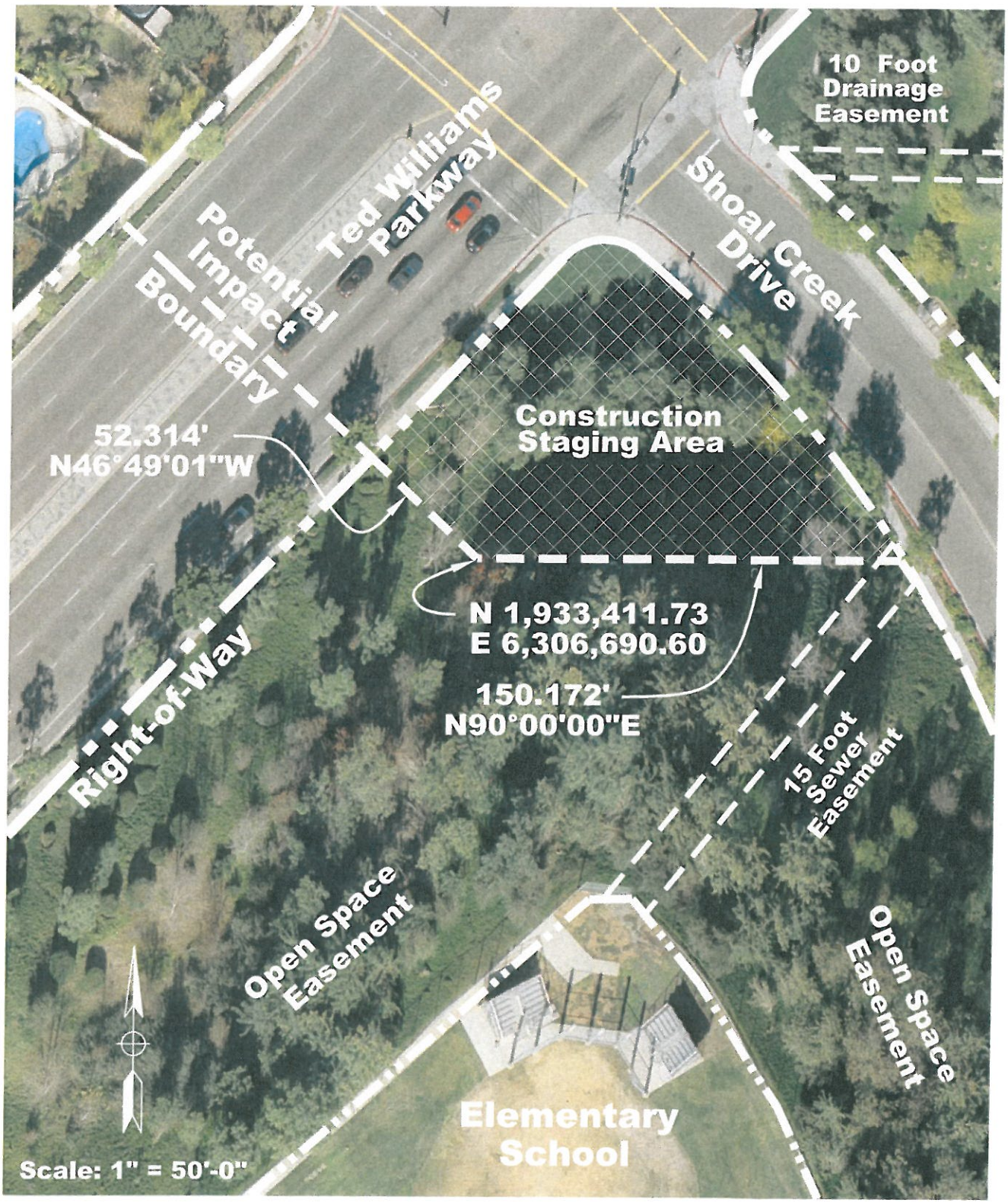

EXHIBIT B

APPENDIX N

Natural Environment Study

Ted Williams Parkway Pedestrian Overcrossing

Natural Environment Study

(Minimal Impacts)

This Minimal Impacts Natural Environment Study discusses existing vegetation communities, flora, fauna, as well as impacts of the proposed project and proposed mitigation. The proposed project is located at Ted Williams Parkway and Shoal Creek Drive in the City of San Diego.

11-SD-Ted Williams Parkway

August 2009

Caltrans
CALIFORNIA DEPARTMENT OF TRANSPORTATION

For individuals with sensory disabilities, this document is available in Braille, large print, on audiocassette, or computer disk. To obtain a copy in one of these alternate formats, please call or write to Caltrans, Attn: Robert James, Caltrans District 11, 4050 Taylor Street, MS-122, San Diego, CA 92110; (619) 688-0236 Voice, or use the California Relay Service TTY number, 1-800-735-2929.

Ted Williams Parkway Pedestrian Overcrossing

Natural Environment Study

(Minimal Impacts)

This Minimal Impacts Natural Environment Study discusses existing vegetation communities, flora, fauna, as well as impacts of the proposed project and proposed mitigation. The proposed project is located at the intersection of Ted Williams Parkway and Shoal Creek Drive in the City of San Diego.

11-SD-Ted Williams Parkway

August 2009

Prepared By: _____ Date: 10/14/09
Debbie Leonard, Senior Scientist
(619) 462-1515
HELIX Environmental Planning, Inc.
7578 El Cajon Boulevard, Suite 200
La Mesa, CA 91941

Approved By: _____ Date: 10/14/09
Mark Koll, Project Manager
(619) 533-4653
City of San Diego
600 B St., 7th Floor
San Diego, CA 92101

Approved By: _____ Date: 10-19-09
Robert A. James, Senior Environmental Planner
(619) 688-0236
California Department of Transportation
Caltrans / District 11

1. Summary

This Minimal Impact Natural Environment Study was prepared to evaluate the Ted Williams Parkway Pedestrian Overcrossing (proposed project). The proposed project is located in the Carmel Mountain Ranch community of the City of San Diego (City), California at Ted Williams Parkway/Shoal Creek Drive. The biological study area (BSA) consists of developed, urban area.

1.1. Regional Species and Habitats of Concern

There are no regional species or habitats of concern within the BSA because of its developed, urban condition.

1.2. Vegetation

Only developed land occurs within the BSA. No sensitive vegetation communities occur within the BSA.

1.3. Plants/Animals

Twenty (20) non-native, landscape plant species and 4 native animal species were observed in the BSA. None of these species are sensitive.

1.4. Invasive Plant Species

Four (4) invasive plant species occur within the BSA.

1.5. Jurisdictional Areas

There are no U.S. Army Corps of Engineers or California Department of Fish and Game jurisdictional areas within the BSA.

1.6. Impacts/Mitigation Measures

The proposed project would have no impacts to sensitive vegetation or sensitive plant and animal species as none occur within the BSA. The proposed project would also not have indirect impacts on water quality by ensuring conformance with pertinent regulatory water quality standards.

The proposed project has the potential to impact birds protected by the Migratory Bird Treaty Act (MBTA) if construction would occur during the breeding season. To ensure compliance with the MBTA, a pre-construction nest survey of the proposed project impact footprint, once it is defined within the BSA (plus 150 feet beyond the footprint), would be conducted by a qualified biologist if construction would occur during the breeding season (February 15 through August 31). If an active nest is found, construction activities would be precluded within 150 feet of the nest until a qualified biologist determines that the nest is no longer active. If construction would occur outside the breeding season, no pre-construction survey would swould be required.

The proposed project may benefit the environment through the removal of invasive plant species, but an adverse impact would occur if invasive plant species are replanted. This impact would be avoided by prohibition of the planting of species listed in the San Diego County Invasive Ornamental Plant Guide (American Society of Landscape Architects [San Diego Chapter] and California Native Plant Society [San Diego Chapter] 2005) and/or the California Invasive Plant Inventory Database (2006).

Table of Contents

Table of Contents v
List of Figures and Abbreviated Terms vi
Chapter 1. Summary iii
1.1. Regional Species and Habitats of Concern iii
1.2. Vegetation iii
1.3. Plants/Animals iii
1.4. Invasive Plant Species iii
1.5. Jurisdictional Areas iii
1.6. Impacts/Mitigation Measures iii
Chapter 2. Introduction 1
2.1. Proposed Project Location, History and Purpose and Need 1
2.2. Proposed Project Description 1
2.3. Proposed Project Alternative 1
Chapter 3. Study Methods 2
3.1. Biological Database Investigations 2
3.2. Vegetation Community Mapping 2
3.3. General Botanical and Zoological Surveys 2
Chapter 4. Environmental Setting 3
4.1. Description of the Existing Biological and Physical Conditions 3
4.2. Regional Species and Habitats of Concern 3
4.3. Vegetation 3
4.4. Plants/Animals 3
4.5. Invasive Plant Species 3
4.6. Jurisdictional Areas 3
Chapter 5. Proposed Project Impacts 4
5.1. Direct Impacts 4
5.1.1. Vegetation 4
5.1.2. Plants/Animals 4
5.1.3. Invasive Plant Species 4
5.2. Indirect Impacts 5
5.2.1. Nesting Birds 5
5.2.2. Water Quality 5
5.2.3. Invasive Plant Species 5
Chapter 6. Mitigation Measures 6
6.1. Nesting Birds 6
6.2. Invasive Plant Species 6
Chapter 7. Permits Required 7
Chapter 8. References 8

Appendix A Plant and Animal Species Observed within the Biological Study Area

List of Figures

Number	Title	Follows Page
1	Regional Location Map	2
2	Project Location Map	2
3	Vegetation Map	2

List of Abbreviated Terms

BSA	biological study area
Caltrans	California Department of Transportation
City	City of San Diego
MBTA	Migratory Bird Treaty Act

2. Introduction

2.1. Proposed Project Location, History and Purpose and Need

The California Department of Transportation (Caltrans) District 11 and the City of San Diego (City) are cooperating on this project to provide safe passage for school children and other pedestrians and bicyclists crossing Ted Williams Parkway, a 6-lane primary arterial that provides access to Interstate 15 and Interstate 5. Currently, the crossing is within an at-grade crosswalk on Ted Williams Parkway. The proposed project is located in the Carmel Mountain Ranch community in San Diego, California (Figures 1 and 2).

2.2. Proposed Project Description

The proposed pedestrian bridge would extend westward from the northwest corner of the Ted Williams Parkway/Shoal Creek Drive intersection and would switchback eastward over Ted Williams Parkway to a trail within a Homeowners' Association landscaped area that would connect with the sidewalk on the north side of Shoal Creek Drive.

2.3. Proposed Project Alternative

One alternative, the No Build Alternative, is proposed. Under the No Build Alternative, the proposed pedestrian bridge would not be constructed. The No Build Alternative would not meet the proposed project objective to provide safe passage for school children and other pedestrians and bicyclists crossing Ted Williams Parkway and is not considered a viable option by Caltrans and the City.

3. Study Methods

A biological field study was conducted on March 11, 2009. The study consisted of mapping vegetation, making a list of all plant and animal species observed, and inspecting the BSA for jurisdictional features. The BSA encompasses 2.9 acres (Figure 3).

3.1. Biological Database Investigations

Prior to conducting the biological investigation, a review of recent aerial photography of the BSA was conducted to determine if there was any potential for sensitive species to occur and if a search of the California Natural Diversity Database and U.S. Fish and Wildlife Service occurrence information would be necessary. Given the developed, urban condition of the BSA, and no potential for sensitive species to occur within the BSA, these searches were determined to be unnecessary.

3.2. Vegetation Community Mapping

Vegetation initially was mapped on a 1"=100' scale topographic map with the aid of a 1"=100' scale aerial photo. Field vegetation maps were digitized into a geographic information system using ArcView 9.3. The created layer was then overlayed onto an ortho-rectified aerial photo base map of the BSA (Figure 3). Vegetation mapping was conducted on March 11, 2009.

3.3. General Botanical and Zoological Surveys

General botanical and zoological surveys were conducted within the BSA by walking on foot and using binoculars. All botanical and zoological species observed or detected in the BSA were recorded. Botanical and zoological surveys were conducted on March 11, 2009 (Appendix A).

I:\ArcGIS\S\SWE-02 TWPOvercrossing\Map\BIO\NES\Fig1_Regional.mxd -NM

Regional Location Map

TED WILLIAMS PARKWAY PEDESTRIAN OVERCROSSING

Figure 1

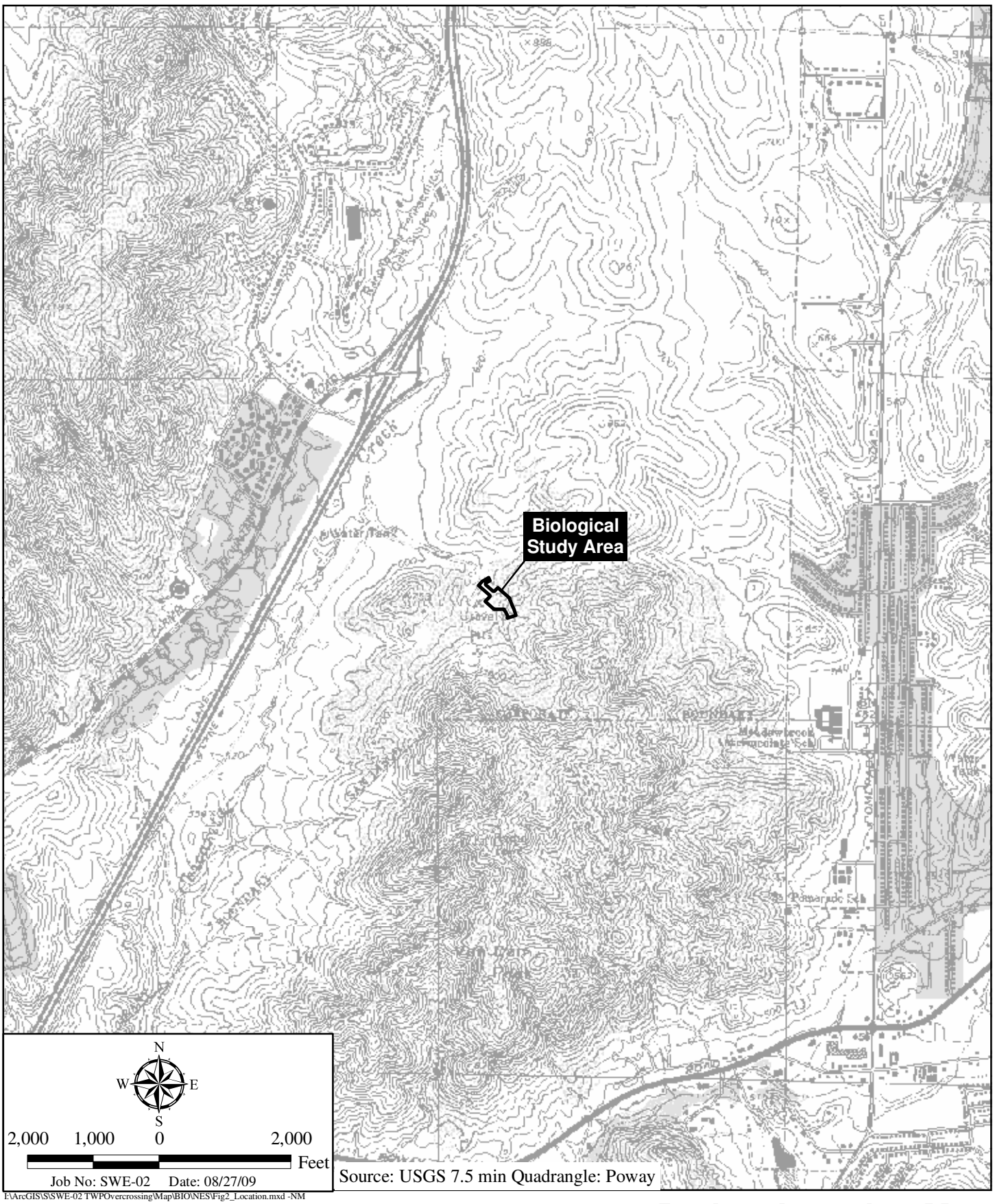

Project Location Map

TED WILLIAMS PARKWAY PEDESTRIAN OVERCROSSING

Vegetation Map

TED WILLIAMS PARKWAY PEDESTRIAN OVERCROSSING

Figure 3

4. Environmental Setting

4.1. Description of the Existing Biological and Physical Conditions

The BSA is comprised of roadways, driveways, sidewalks, and maintainted landscaping in an urban setting. The natural topography of the area was altered during construction of Ted Williams Parkway, Shoal Creek Drive, and the landscaped areas associated with the residences just outside the BSA. The native soils in the BSA have also likely been removed, or altered by the addition of fill soils that may have come from outside the area.

4.2. Regional Species and Habitats of Concern

There are no regional species or habitats of concern in the BSA because of its developed, urban condition.

4.3. Vegetation

Only developed land occurs within the BSA. No sensitive vegetation communities occur within the BSA.

4.4. Plants/Animals

Twenty (20) non-native, landscape plant species and 4 native animal species were observed during the biological investigation of the BSA (Appendix A).

4.5. Invasive Plant Species

There are 4 invasive plant species within the BSA that are included in the San Diego County Invasive Ornamental Plant Guide (American Society of Landscape Architects [San Diego Chapter] and California Native Plant Society [San Diego Chapter] 2005): eucalyptus (*Eucalyptus* spp.), red apple (*Aptenia cordifolia*), gazania (*Gazania* spp.), and Peruvian pepper (*Schinus molle*). Eucalyptus and Peruvian pepper are also included in the California Invasive Plant Inventory Database (California Invasive Plant Council 2006).

4.6. Jurisdictional Areas

There are no areas within the BSA that are under U.S. Army Corps of Engineers jurisdiction pursuant to Section 404 of the Clean Water Act (33 U.S.C. 1344) or that are considered wetland or streambed habitats under California Department of Fish and Game jurisdiction pursuant to Section 1600 of the California Fish and Game Code.

5. Proposed Project Impacts

This section addresses the proposed project as well as a No Build Alternative. Since the proposed project impact footprint has not yet been defined, the entire 2.9-acre BSA (Figure 3) is considered impacted in this analysis, although it is likely that a much smaller area would actually be affected.

5.1. Direct Impacts

Proposed Project

5.1.1. Vegetation

The BSA consists of entirely of developed land, which is where permanent structures and/or pavement have been placed preventing the growth of vegetation or where ornamental landscaping is clearly tended and maintained. The proposed project would impact up to 2.9 acres of developed land. Developed land is not a sensitive vegetation community; therefore, impacts are less than adverse, and no mitigation is required.

5.1.2. Plants/Animals

No sensitive plant or animal species were observed or are expected to occur within the BSA; therefore, none are anticipated to be affected, and no mitigation is required.

5.1.3. Invasive Plant Species

Under the 100 percent impact assumption to the BSA, all vegetation, and therefore all invasive plant species, would be removed by the proposed project resulting in a beneficial impact on the environment. As such, no mitigation is required.

No Build Alternative

Implementation of the No Build Alternative would result in no direct impacts to vegetation communities, plants or animals, or invasive plant species since the proposed pedestrian overcrossing would not be constructed.

5.2. Indirect Impacts

Proposed Project

5.2.1. Nesting Birds

The Migratory Bird Treaty Act (MBTA) protects nearly all North American birds, their active nests, and eggs from disturbance or destruction. Construction activities resulting from this project occuring within 150 feet of an active bird nest could result in a violation of the MBTA. Avoidance of this impact is required.

5.2.2. Water Quality

Erosion control efforts would encompass appropriate measures to ensure conformance with pertinent regulatory standards. Specifically, this would include implementing an approved Storm Water Pollution Prevention Plan, pursuant to applicable Caltrans, City, and National Pollutant Discharge Elimination System requirements. Therefore, there would be no adverse impacts to water quality and no mitigation is required.

5.2.3. Invasive Plant Species

If the BSA is replanted with invasive plant species, this could adversely affect native vegetation communities outside the BSA. Seeds from these species may be carried by the wind or by birds, for example, into native vegetation communities. If these invasive plant species were to be spread to other areas, this would be an adverse impact. Avoidance of this impact is required.

No Build Alternative

Implementation of the No Build Alternative would result in no indirect impacts to vegetation communities, plants or animals, or new indirect impacts from invasive plant species since the proposed pedestrian overcrossing would not be constructed.

6. Mitigation Measures

6.1. Nesting Birds

To ensure compliance with the MBTA, a pre-construction nesting bird survey within the proposed project impact footprint, once it is defined within the BSA (plus 150 feet beyond the footprint), shall be conducted by a qualified biologist if construction will occur during the breeding season (February 15 through August 31). If an active nest is found, construction activities shall be precluded within 150 feet of the nest until a qualified biologist determines that the nest is no longer active. If construction occurs outside the breeding season, no pre-construction survey shall be required.

6.2. Invasive Plant Species

Landscaping associated with the proposed project shall not include any plant species listed in the San Diego County Invasive Ornamental Plant Guide (American Society of Landscape Architects [San Diego Chapter] and California Native Plant Society [San Diego Chapter] 2005) and/or the California Invasive Plant Inventory Database (Cal-IPC 2006).

7. Permits Required

No federally listed or State listed species are known to occur or would be impacted by the proposed project. Therefore, no federal or State Endangered Species Act permits are required. Additionally, there are no jurisdictional areas present in the BSA, so no federal Clean Water Act permits are required, and no Streambed Alteration Agreement is required.

8. References

American Society of Landscape Architects (San Diego Chapter) and California Native Plant Society (San Diego Chapter). 2005. San Diego County Invasive Ornamental Plant Guide. http://www.asla-sandiego.org/images/matrix.pdf Accessed March 19, 2009.

Cal-IPC. 2006. California Invasive Plant Inventory. Cal-IPC Publication 2006-02. California Invasive Plant Council: Berkeley, CA. http://www.cal-ipc.org/ip/inventory/weedlist.php Accessed March 19, 2009.

Appendix A Plant and Animal Species Observed within the Biological Study Area

Appendix A **PLANT AND ANIMAL SPECIES OBSERVED WITHIN THE BIOLOGICAL STUDY AREA**	
PLANT SPECIES	
Common Name	**Scientific Name**
Camphor tree	*Cinnamomum camphora*
Eucalyptus	*Eucalyptus* sp.
Flowering pear	*Pyrus calleryana*
Gazania	*Gazania* sp.
Jacaranda	*Jacaranda* sp.
King palm	*Archontophoenix cunninghamiana*
Lantana	*Lantana* sp.
Lily of the Nile	*Agapanthus* sp.
Melaleuca	*Melaleuca* sp.
Oak	*Quercus* sp.
Oleander	*Nerium oleander*
Peruvian pepper	*Schinus molle*
Pine	*Pinus* sp.
Podocarpus	*Podocarpus* sp.
Queen palm	*Syagrus romanzoffiana*
Raphiolepis	*Raphiolepis* sp.
Red apple	*Aptenia cordifolia*
Rosemary	*Rosmarinus officinalus*
Rosewood	*Tipuana tipu*
Tea tree	*Leptospermum* sp.
ANIMAL SPECIES	
Common Name	**Scientific Name**
Anna's hummingbird	*Calypte anna*
Bushtit	*Psaltriparus minimus*
Common raven	*Corvus corax*
House finch	*Carpodacus mexicanus*

APPENDIX O

Work Permit for Private Property

PERMIT TO DO WORK ON PRIVATE PROPERTY

Enrique L. and Delia V. Opinion, husband and wife, hereinafter called PROPERTY OWNERS, are the owners of land located at 14019 Stoney Gate Place, San Diego, CA 92128-4251, identified by San Diego County Assessor's Parcel Number 313-642-17-00, and shown outlined in red and identified as "SUBJECT" on the attached Exhibit "A" Assessor's Parcel Map (the "Property"). PROPERTY OWNERS hereby grant to the City of San Diego, its agents or employees, hereinafter called CITY, permission to enter upon the hereinabove described Property for the purpose of:

Mitigating impacts to the Property by: (i) constructing an extension of the existing wall sited on the Property to prevent users of the Project (as Project is defined below) from accessing, entering and walking upon the Property; and, (ii) add screen plantings to the Property to shield the residence located on the Property from the view of users of the Project.

It is understood and agreed that this work is being done in conjunction with the project known as the "**TED WILLIAMS PARKWAY PEDESTRIAN OVERCROSSING AT SHOAL CREEK DRIVE**" (the "Project") and the permission herein granted shall terminate upon the date of completion of said Project, as completion date is determined by CITY'S City Engineer.

CITY shall, to the extent authorized by law, hold PROPERTY OWNERS harmless from any and all liability arising out of, or in any way connected with said Project.

CITY'S contractor shall carry liability insurance as required in Standard Specifications for Public Works Construction 2000 Edition Section 7-3, as amended by City of San Diego Supplement 2010.

PROPERTY OWNERS

Date: 2/10/11 BY: _____
Enrique L. Opinion

Date: 2/10/11 BY: _____
Delia V. Opinion

EXHIBIT "A"

ASSESSOR'S PARCEL MAP

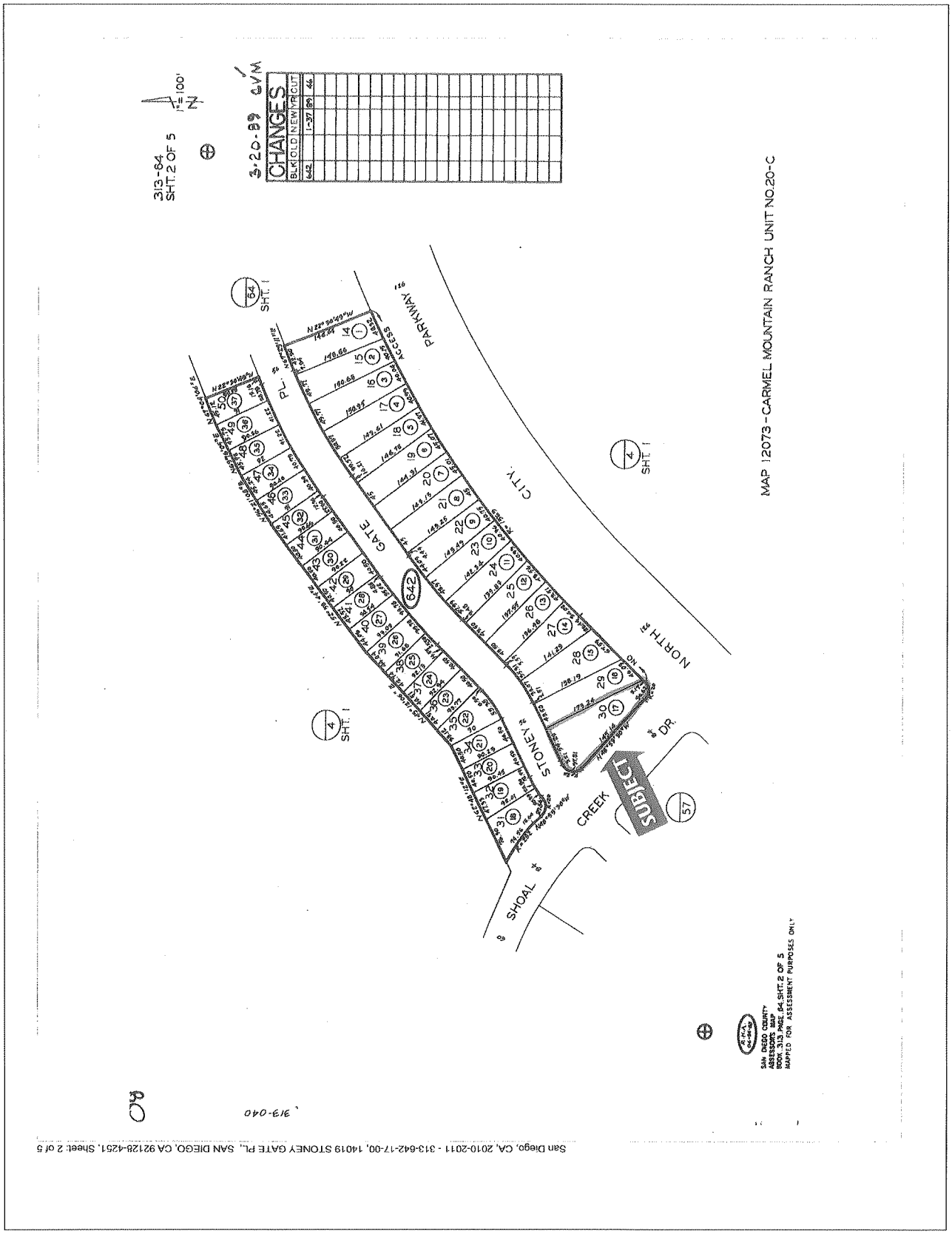

City of San Diego

ADDENDUM "A"

FOR

TED WILLIAMS PARKWAY PEDESTRIAN OVERCROSSING AT SHOAL CREEK DRIVE

BID NO.:	**K-13-4885-DBB-3**
SAP NO. (WBS/IO/CC):	**S-00941**
CLIENT DEPARTMENT:	**2112**
COUNCIL DISTRICT:	**5**
PROJECT TYPE:	**IC**
FEDERAL AID PROJECT NO.:	**HPLU 5004(168)**

A. CHANGES TO THE BID SUBMITTAL DUE DATE AND TIME

The bid opening date for this project has been extended to **2:00PM** on **AUGUST 16th, 2012.**

Proposals will be received at the Public Works Contracting Group, 1200 Third Avenue, Suite 200, San Diego, California.

B. CHANGES TO CONTRACT DOCUMENTS

The following changes to the Contract Documents are hereby made effective as though originally issued with the bid package. Bidders are reminded that all previous requirements to this solicitation remain in full force and effect.

C. VOLUME 1

1. To the FUNDING AGENCY PROVISIONS, Item 10, Wage Rates, pages 30 through 59, **DELETE** in their entirety and **SUBSTITUTE** with pages 3 of 47 through 35 of 47 of this Addendum.

2. SECTION 14, FEDERAL REQUIREMENTS FOR FEDERAL-AID CONSTRUCTION PROJECTS, Required Contract Provisions Federal-Aid Construction Contracts and Projects, pages 237 through 247, **DELETE** in their entirety and **SUBSTITUTE** with pages 36 of 47 through 45 of 47 of this Addendum.

D. VOLUME 2

1. To the BIDDING DOCUMENTS, **ADD** forms BID BOND and EQUAL BENEFITS ORDINANCE CERTIFICATION OF COMPLIANCE, pages 46 of 47 through 47 of 47 of this Addendum.

Tony Heinrichs, Director
Public Works Department

Dated: August 3, 2012
San Diego, California

TH/bd/ca/ls

10. **WAGE RATES**. This contract shall be subject to the following Davis-Bacon Wage Decisions

General Decision Number: CA120001 08/03/2012 CA1

Superseded General Decision Number: CA20100001

State: California

Construction Types: Building, Heavy (Heavy and Dredging), Highway and Residential

County: San Diego County in California.

BUILDING CONSTRUCTION PROJECTS; DREDGING PROJECTS (does not include hopper dredge work); HEAVY CONSTRUCTION PROJECTS (does not include water well drilling); HIGHWAY CONSTRUCTION PROJECTS; RESIDENTIAL CONSTRUCTION PROJECTS (consisting of single family homes and apartments up to and including 4 stories)

Modification Number	Publication Date
0	01/06/2012
1	02/24/2012
2	03/02/2012
3	03/30/2012
4	04/13/2012
5	05/18/2012
6	06/08/2012
7	07/13/2012
8	08/03/2012

ASBE0005-002 06/28/2010

	Rates	Fringes
Asbestos Workers/Insulator (Includes the application of all insulating materials, protective coverings, coatings, and finishes to all types of mechanical systems)	$ 32.79	16.31
Fire Stop Technician (Application of Firestopping Materials for wall openings and penetrations in walls, floors, ceilings and curtain walls)	$ 24.21	3.76

ASBE0005-004 06/28/2010

	Rates	Fringes
Asbestos Removal worker/hazardous material handler (Includes preparation, wetting, stripping, removal, scrapping, vacuuming, bagging and disposing of all insulation materials from mechanical systems, whether they contain asbestos or not)	$ 18.70	8.65

BOIL0092-003 05/01/2011

	Rates	Fringes
BOILERMAKER	$ 41.26	25.27

BRCA0004-008 11/01/2011

	Rates	Fringes
BRICKLAYER; MARBLE SETTER	$ 33.15	14.05

BRCA0018-004 06/01/2012

	Rates	Fringes
MARBLE FINISHER	$ 27.04	10.66
TILE FINISHER	$ 22.37	9.19
TILE LAYER	$ 33.55	13.55

BRCA0018-010 09/01/2009

	Rates	Fringes
TERRAZZO FINISHER	$ 26.59	9.62
TERRAZZO WORKER/SETTER	$ 33.63	10.46

CARP0409-002 07/01/2008

	Rates	Fringes
Diver		
(1) Wet	$ 663.68	9.82
(2) Standby	$ 331.84	9.82
(3) Tender	$ 323.84	9.82
(4) Assistant Tender	$ 299.84	9.82

Amounts in "Rates' column are per day

CARP0409-008 08/01/2010

	Rates	Fringes
Modular Furniture Installer	$ 17.00	7.41

CARP0547-001 07/01/2009

	Rates	Fringes
CARPENTER		
(1) Bridge	$ 37.28	10.58
(2) Commercial Building	$ 32.30	10.58
(3) Heavy & Highway	$ 37.15	10.58
(4) Residential Carpenter	$ 25.84	10.58
(5) Residential Insulation Installer	$ 18.00	8.16
MILLWRIGHT	$ 37.65	10.58
PILEDRIVERMAN	$ 37.28	10.58

CARP0547-002 07/01/2009

	Rates	Fringes
Drywall		
(1) Work on wood framed construction of single family residences, apartments or condominiums under four stories		
Drywall Installer/Lather	$ 21.00	8.58
Drywall Stocker/Scrapper	$ 11.00	6.67
(2) All other work		
Drywall Installer/Lather	$ 27.35	9.58
Drywall Stocker/Scrapper	$ 11.00	6.67

ELEC0569-001 12/01/2011

	Rates	Fringes
Electricians (Tunnel Work)		
Cable Splicer	$ 42.21	3%+11.89
Electrician	$ 41.46	3%+11.89
Electricians: (All Other Work, Including 4 Stories Residential)		
Cable Splicer	$ 38.15	3%+11.89
Electrician	$ 36.85	3%+11.89

ELEC0569-005 12/01/2011

	Rates	Fringes
Sound & Communications		
Sound Technician	$ 27.32	3%+10.81
Soundman	$ 21.86	3%+9.17

SOUND TECHNICIAN: Terminating, operating and performing final check-out

SOUNDMAN: Wire-pulling, splicing, assembling and installing devices

SCOPE OF WORK Assembly, installation, operation, service and maintenance of components or systems as used in closed

circuit television, amplified master television distribution, CATV on private property, intercommunication, burglar alarm, fire alarm, life support and all security alarms, private and public telephone and related telephone interconnect, public address, paging, audio, language, electronic, background music system less than line voltage or any system acceptable for class two wiring for private, commercial, or industrial use furnished by leased wire, frequency modulation or other recording devices, electrical apparatus by means of which electricity is applied to the amplification, transmission, transference, recording or reproduction of voice, music, sound, impulses and video. Excluded from this Scope of Work - transmission, service and maintenance of background music. All of the above shall include the installation and transmission over fiber optics.

ELEC0569-006 12/01/2011

Work on street lighting; traffic signals; and underground systems and/or established easements outside of buildings

	Rates	Fringes
Traffic signal, street light and underground work		
Utility Technician #1	$ 27.25	3%+7.27
Utility Technician #2	$ 22.40	3%+7.27

STREET LIGHT & TRAFFIC SIGNAL WORK:

UTILITY TECHNICIAN #1: Installation of street lights and traffic signals, including electrical circuitry, programmable controller, pedestal-mounted electrical meter enclosures and laying of pre-assembled cable in ducts. The layout of electrical systems and communication installation including proper position of trench depths, and radius at duct banks, location for manholes, street lights and traffic signals.

UTILITY TECHNICIAN #2: Distribution of material at jobsite, installation of underground ducts for electrical, telephone, cable TV land communication systems. The setting, leveling, grounding and racking of precast manholes, handholes and transformer pads.

ELEC0569-008 06/01/2011

	Rates	Fringes
ELECTRICIAN (Residential, 1-3 Stories)	$ 22.37	3%+2.90

---

* ELEC1245-001 06/01/2012

	Rates	Fringes
LINE CONSTRUCTION		
(1) Lineman; Cable splicer	$ 48.95	14.05
(2) Equipment specialist (operates crawler tractors, commercial motor vehicles, backhoes, trenchers, cranes (50 tons and below), overhead & underground distribution line equipment)	$ 39.09	12.97
(3) Groundman	$ 29.91	12.70
(4) Powderman	$ 43.71	13.15

HOLIDAYS: New Year's Day, M.L. King Day, Memorial Day, Independence Day, Labor Day, Veterans Day, Thanksgiving Day and day after Thanksgiving, Christmas Day

---

ELEV0018-001 01/01/2012

	Rates	Fringes
ELEVATOR MECHANIC	$ 47.73	23.535

FOOTNOTE:

PAID VACATION: Employer contributes 8% of regular hourly rate as vacation pay credit for employees with more than 5 years of service, and 6% for 6 months to 5 years of service. PAID HOLIDAYS: New Years Day, Memorial Day, Independence Day, Labor Day, Veterans Day, Thanksgiving Day, Friday after Thanksgiving, and Christmas Day.

ENGI0012-003 07/01/2012

	Rates	Fringes
OPERATOR: Power Equipment (All Other Work)		
GROUP 1	$ 37.40	20.00
GROUP 2	$ 38.18	20.00
GROUP 3	$ 38.47	20.00
GROUP 4	$ 39.96	20.00
GROUP 5	$ 41.06	20.00
GROUP 6	$ 40.18	20.00
GROUP 8	$ 41.39	20.00
GROUP 9	$ 40.41	20.00
GROUP 10	$ 40.41	20.00
GROUP 11	$ 40.58	20.00
GROUP 12	$ 40.58	20.00
GROUP 13	$ 40.68	20.00
GROUP 14	$ 40.71	20.00
GROUP 15	$ 40.79	20.00
GROUP 16	$ 40.91	20.00
GROUP 17	$ 41.08	20.00
GROUP 18	$ 41.18	20.00
GROUP 19	$ 41.29	20.00
GROUP 20	$ 41.41	20.00
GROUP 21	$ 41.58	20.00
GROUP 22	$ 41.68	20.00
GROUP 23	$ 41.79	20.00
GROUP 24	$ 41.91	20.00
GROUP 25	$ 42.08	20.00
OPERATOR: Power Equipment (Cranes, Piledriving & Hoisting)		
GROUP 1	$ 38.75	20.00
GROUP 2	$ 39.53	20.00
GROUP 3	$ 39.82	20.00
GROUP 4	$ 39.96	20.00
GROUP 5	$ 40.18	20.00
GROUP 6	$ 40.29	20.00
GROUP 7	$ 40.41	20.00
GROUP 8	$ 40.58	20.00
GROUP 9	$ 40.75	20.00
GROUP 10	$ 41.75	20.00
GROUP 11	$ 42.75	20.00
GROUP 12	$ 43.75	20.00
GROUP 13	$ 44.75	20.00

	Rates	Fringes
OPERATOR: Power Equipment (Tunnel Work)		
GROUP 1	$ 39.25	20.00
GROUP 2	$ 40.03	20.00
GROUP 3	$ 40.32	20.00
GROUP 4	$ 40.46	20.00
GROUP 5	$ 40.68	20.00
GROUP 6	$ 40.79	20.00
GROUP 7	$ 40.91	20.00

PREMIUM PAY:

$3.75 per hour shall be paid on all Power Equipment Operator work on the followng Military Bases: China Lake Naval Reserve, Vandenberg AFB, Point Arguello, Seely Naval Base, Fort Irwin, Nebo Annex Marine Base, Marine Corp Logistics Base Yermo, Edwards AFB, 29 Palms Marine Base and Camp Pendleton

Workers required to suit up and work in a hazardous material environment: $2.00 per hour additional. Combination mixer and compressor operator on gunite work shall be classified as a concrete mobile mixer operator.

SEE ZONE DEFINITIONS AFTER CLASSIFICATIONS

POWER EQUIPMENT OPERATORS CLASSIFICATIONS

GROUP 1: Bargeman; Brakeman; Compressor operator; Ditch Witch, with seat or similar type equipment; Elevator operator-inside; Engineer Oiler; Forklift operator (includes loed, lull or similar types under 5 tons; Generator operator; Generator, pump or compressor plant operator; Pump operator; Signalman; Switchman

GROUP 2: Asphalt-rubber plant operator (nurse tank operator); Concrete mixer operator-skip type; Conveyor operator; Fireman; Forklift operator (includes loed, lull or similar types over 5 tons; Hydrostatic pump operator; oiler crusher (asphalt or concrete plant); Petromat laydown machine; PJU side dum jack; Screening and conveyor machine operator (or similar types); Skiploader (wheel type up to 3/4 yd. without attachment); Tar pot fireman; Temporary heating plant operator; Trenching machine oiler

GROUP 3: Asphalt-rubber blend operator; Bobcat or similar type (Skid steer); Equipment greaser (rack); Ford Ferguson (with dragtype attachments); Helicopter radioman (ground); Stationary pipe wrapping and cleaning machine operator

GROUP 4: Asphalt plant fireman; Backhoe operator (mini-max or similar type); Boring machine operator; Boxman or mixerman (asphalt or concrete); Chip spreading machine operator; Concrete cleaning decontamination machine operator; Concrete Pump Operator (small portable); Drilling machine operator, small auger types (Texoma super economatic or similar types - Hughes 100 or 200 or similar types - drilling depth of 30' maximum); Equipment greaser (grease truck); Guard rail post driver operator; Highline cableway signalman; Hydra-hammer-aero stomper; Micro Tunneling (above ground tunnel); Power concrete curing machine operator; Power concrete saw operator; Power-driven jumbo form setter operator; Power sweeper operator; Rock Wheel Saw/Trencher; Roller operator (compacting); Screed operator (asphalt or concrete); Trenching machine operator (up to 6 ft.); Vacuum or much truck

GROUP 5: Equipment Greaser (Grease Truck/Multi Shift).

GROUP 6: Articulating material hauler; Asphalt plant engineer; Batch plant operator; Bit sharpener; Concrete joint machine operator (canal and similar type); Concrete planer operator; Dandy digger; Deck engine operator; Derrickman (oilfield type); Drilling machine operator, bucket or auger types (Calweld 100 bucket or similar types - Watson 1000 auger or similar types - Texoma 330, 500 or 600 auger or similar types - drilling depth of 45' maximum); Drilling machine operator; Hydrographic seeder machine operator (straw, pulp or seed), Jackson track maintainer, or similar type; Kalamazoo Switch tamper, or similar type; Machine tool operator; Maginnis internal full slab vibrator, Mechanical berm, curb or gutter(concrete or asphalt); Mechanical finisher operator (concrete, Clary-Johnson-Bidwell or similar); Micro tunnel system (below ground); Pavement breaker operator (truck mounted); Road oil mixing machine operator; Roller operator (asphalt or finish), rubber-tired earth moving equipment (single engine, up to and including 25 yds. struck); Self-propelled tar pipelining machine operator; Skiploader operator (crawler and wheel type, over 3/4 yd. and up to and including 1-1/2 yds.); Slip form pump operator (power

driven hydraulic lifting device for concrete forms); Tractor operator-bulldozer, tamper-scraper (single engine, up to 100 h.p. flywheel and similar types, up to and including D-5 and similar types); Tugger hoist operator (1 drum); Ultra high pressure waterjet cutting tool system operator; Vacuum blasting machine operator

GROUP 8: Asphalt or concrete spreading operator (tamping or finishing); Asphalt paving machine operator (Barber Greene or similar type); Asphalt-rubber distribution operator; Backhoe operator (up to and including 3/4 yd.), small ford, Case or similar; Cast-in-place pipe laying machine operator; Combination mixer and compressor operator (gunite work); Compactor operator (self-propelled); Concrete mixer operator (paving); Crushing plant operator; Drill Doctor; Drilling machine operator, Bucket or auger types (Calweld 150 bucket or similar types - Watson 1500, 2000 2500 auger or similar types - Texoma 700, 800 auger or similar types - drilling depth of 60' maximum); Elevating grader operator; Grade checker; Gradall operator; Grouting machine operator; Heavy-duty repairman; Heavy equipment robotics operator; Kalamazoo balliste regulator or similar type; Kolman belt loader and similar type; Le Tourneau blob compactor or similar type; Loader operator (Athey, Euclid, Sierra and similar types); Mobark Chipper or similar; Ozzie padder or similar types; P.C. slot saw; Pneumatic concrete placing machine operator (Hackley-Presswell or similar type); Pumpcrete gun operator; Rock Drill or similar types; Rotary drill operator (excluding caisson type); Rubber-tired earth-moving equipment operator (single engine, caterpillar, Euclid, Athey Wagon and similar types with any and all attachments over 25 yds. up to and including 50 cu. yds. struck); Rubber-tired earth-moving equipment operator (multiple engine up to and including 25 yds. struck); Rubber-tired scraper operator (self-loading paddle wheel type-John Deere, 1040 and similar single unit); Self-propelled curb and gutter machine operator; Shuttle buggy; Skiploader operator (crawler and wheel type over 1-1/2 yds. up to and including 6-1/2 yds.); Soil remediation plant operator; Surface heaters and planer operator; Tractor compressor drill combination operator; Tractor operator (any type larger than D-5 - 100 flywheel h.p. and over, or similar-bulldozer, tamper, scraper and push tractor single engine); Tractor operator (boom attachments), Traveling pipe wrapping, cleaning and bendng machine operator; Trenching machine operator (over 6 ft. depth capacity,

manufacturer's rating); trenching Machine with Road Miner attachment (over 6 ft depth capacity): Ultra high pressure waterjet cutting tool system mechanic; Water pull (compaction) operator

GROUP 9: Heavy Duty Repairman

GROUP 10: Drilling machine operator, Bucket or auger types (Calweld 200 B bucket or similar types-Watson 3000 or 5000 auger or similar types-Texoma 900 auger or similar types-drilling depth of 105' maximum); Dual drum mixer, dynamic compactor LDC350 (or similar types); Monorail locomotive operator (diesel, gas or electric); Motor patrol-blade operator (single engine); Multiple engine tractor operator (Euclid and similar type-except Quad 9 cat.); Rubber-tired earth-moving equipment operator (single engine, over 50 yds. struck); Pneumatic pipe ramming tool and similar types; Prestressed wrapping machine operator; Rubber-tired earth-moving equipment operator (single engine, over 50 yds. struck); Rubber tired earth moving equipment operator (multiple engine, Euclid, caterpillar and similar over 25 yds. and up to 50 yds. struck), Tower crane repairman; Tractor loader operator (crawler and wheel type over 6-1/2 yds.); Woods mixer operator (and similar Pugmill equipment)

GROUP 11: Heavy Duty Repairman - Welder Combination, Welder - Certified.

GROUP 12: Auto grader operator; Automatic slip form operator; Drilling machine operator, bucket or auger types (Calweld, auger 200 CA or similar types - Watson, auger 6000 or similar types - Hughes Super Duty, auger 200 or similar types - drilling depth of 175' maximum); Hoe ram or similar with compressor; Mass excavator operator less tha 750 cu. yards; Mechanical finishing machine operator; Mobile form traveler operator; Motor patrol operator (multi-engine); Pipe mobile machine operator; Rubber-tired earth- moving equipment operator (multiple engine, Euclid, Caterpillar and similar type, over 50 cu. yds. struck); Rubber-tired self- loading scraper operator (paddle-wheel-auger type self-loading - two (2) or more units)

GROUP 13: Rubber-tired earth-moving equipment operator operating equipment with push-pull system (single engine, up to and including 25 yds. struck)

GROUP 14: Canal liner operator; Canal trimmer operator; Remote- control earth-moving equipment operator (operating a second piece of equipment: $1.00 per hour additional); Wheel excavator operator (over 750 cu. yds.)

GROUP 15: Rubber-tired earth-moving equipment operator, operating equipment with push-pull system (single engine, Caterpillar, Euclid, Athey Wagon and similar types with any and all attachments over 25 yds. and up to and including 50 yds. struck); Rubber-tired earth-moving equipment operator, operating equipment with push-pull system (multiple engine-up to and including 25 yds. struck)

GROUP 16: Rubber-tired earth-moving equipment operator, operating equipment with push-pull system (single engine, over 50 yds. struck); Rubber-tired earth-moving equipment operator, operating equipment with push-pull system (multiple engine, Euclid, Caterpillar and similar, over 25 yds. and up to 50 yds. struck)

GROUP 17: Rubber-tired earth-moving equipment operator, operating equipment with push-pull system (multiple engine, Euclid, Caterpillar and similar, over 50 cu. yds. struck); Tandem tractor operator (operating crawler type tractors in tandem - Quad 9 and similar type)

GROUP 18: Rubber-tired earth-moving equipment operator, operating in tandem (scrapers, belly dumps and similar types in any combination, excluding compaction units - single engine, up to and including 25 yds. struck)

GROUP 19: Rotex concrete belt operator (or similar types); Rubber-tired earth-moving equipment operator, operating in tandem (scrapers, belly dumps and similar types in any combination, excluding compaction units - single engine, Caterpillar, Euclid, Athey Wagon and similar types with any and all attachments over 25 yds.and up to and including 50 cu. yds. struck); Rubber-tired earth-moving equipment operator, operating in tandem (scrapers, belly dumps and similar types in any combination, excluding compaction units - multiple engine, up to and including 25 yds. struck)

GROUP 20: Rubber-tired earth-moving equipment operator, operating in tandem (scrapers, belly dumps and similar types in any combination, excluding compaction units -

single engine, over 50 yds. struck); Rubber-tired earth-moving equipment operator, operating in tandem (scrapers, belly dumps, and similar types in any combination, excluding compaction units - multiple engine, Euclid, Caterpillar and similar, over 25 yds. and up to 50 yds. struck)

GROUP 21: Rubber-tired earth-moving equipment operator, operating in tandem (scrapers, belly dumps and similar types in any combination, excluding compaction units - multiple engine, Euclid, Caterpillar and similar type, over 50 cu. yds. struck)

GROUP 22: Rubber-tired earth-moving equipment operator, operating equipment with the tandem push-pull system (single engine, up to and including 25 yds. struck)

GROUP 23: Rubber-tired earth-moving equipment operator, operating equipment with the tandem push-pull system (single engine, Caterpillar, Euclid, Athey Wagon and similar types with any and all attachments over 25 yds. and up to and including 50 yds. struck); Rubber-tired earth-moving equipment operator, operating with the tandem push-pull system (multiple engine, up to and including 25 yds. struck)

GROUP 24: Rubber-tired earth-moving equipment operator, operating equipment with the tandem push-pull system (single engine, over 50 yds. struck); Rubber-tired earth-moving equipment operator, operating equipment with the tandem push-pull system (multiple engine, Euclid, Caterpillar and similar, over 25 yds. and up to 50 yds. struck)

GROUP 25: Concrete pump operator-truck mounted; Rubber-tired earth-moving equipment operator, operating equipment with the tandem push-pull system (multiple engine, Euclid, Caterpillar and similar type, over 50 cu. yds. struck)

CRANES, PILEDRIVING AND HOISTING EQUIPMENT CLASSIFICATIONS

GROUP 1: Engineer oiler; Fork lift operator (includes loed, lull or similar types)

GROUP 2: Truck crane oiler

GROUP 3: A-frame or winch truck operator; Ross carrier operator (jobsite)

GROUP 4: Bridge-type unloader and turntable operator; Helicopter hoist operator

GROUP 5: Hydraulic boom truck; Stinger crane (Austin-Western or similar type); Tugger hoist operator (1 drum)

GROUP 6: Bridge crane operator; Cretor crane operator; Hoist operator (Chicago boom and similar type); Lift mobile operator; Lift slab machine operator (Vagtborg and similar types); Material hoist and/or manlift operator; Polar gantry crane operator; Self Climbing scaffold (or similar type); Shovel, backhoe, dragline, clamshell operator (over 3/4 yd. and up to 5 cu. yds. mrc); Tugger hoist operator

GROUP 7: Pedestal crane operator; Shovel, backhoe, dragline, clamshell operator (over 5 cu. yds. mrc); Tower crane repair; Tugger hoist operator (3 drum)

GROUP 8: Crane operator (up to and including 25 ton capacity); Crawler transporter operator; Derrick barge operator (up to and including 25 ton capacity); Hoist operator, stiff legs, Guy derrick or similar type (up to and including 25 ton capacity); Shovel, backhoe, dragline, clamshell operator (over 7 cu. yds., M.R.C.)

GROUP 9: Crane operator (over 25 tons and up to and including 50 tons mrc); Derrick barge operator (over 25 tons up to and including 50 tons mrc); Highline cableway operator; Hoist operator, stiff legs, Guy derrick or similar type (over 25 tons up to and including 50 tons mrc); K-crane operator; Polar crane operator; Self erecting tower crane operator maximum lifting capacity ten tons

GROUP 10: Crane operator (over 50 tons and up to and including 100 tons mrc); Derrick barge operator (over 50 tons up to and including 100 tons mrc); Hoist operator, stiff legs, Guy derrick or similar type (over 50 tons up to and including 100 tons mrc), Mobile tower crane operator (over 50 tons, up to and including 100 tons M.R.C.); Tower crane operator and tower gantry

GROUP 11: Crane operator (over 100 tons and up to and including 200 tons mrc); Derrick barge operator (over 100

tons up to and including 200 tons mrc); Hoist operator, stiff legs, Guy derrick or similar type (over 100 tons up to and including 200 tons mrc); Mobile tower crane operator (over 100 tons up to and including 200 tons mrc)

GROUP 12: Crane operator (over 200 tons up to and including 300 tons mrc); Derrick barge operator (over 200 tons up to and including 300 tons mrc); Hoist operator, stiff legs, Guy derrick or similar type (over 200 tons, up to and including 300 tons mrc); Mobile tower crane operator (over 200 tons, up to and including 300 tons mrc)

GROUP 13: Crane operator (over 300 tons); Derrick barge operator (over 300 tons); Helicopter pilot; Hoist operator, stiff legs, Guy derrick or similar type (over 300 tons); Mobile tower crane operator (over 300 tons)

TUNNEL CLASSIFICATIONS

GROUP 1: Skiploader (wheel type up to 3/4 yd. without attachment)

GROUP 2: Power-driven jumbo form setter operator

GROUP 3: Dinkey locomotive or motorperson (up to and including 10 tons)

GROUP 4: Bit sharpener; Equipment greaser (grease truck); Slip form pump operator (power-driven hydraulic lifting device for concrete forms); Tugger hoist operator (1 drum); Tunnel locomotive operator (over 10 and up to and including 30 tons)

GROUP 5: Backhoe operator (up to and including 3/4 yd.); Small Ford, Case or similar; Drill doctor; Grouting machine operator; Heading shield operator; Heavy-duty repairperson; Loader operator (Athey, Euclid, Sierra and similar types); Mucking machine operator (1/4 yd., rubber-tired, rail or track type); Pneumatic concrete placing machine operator (Hackley-Presswell or similar type); Pneumatic heading shield (tunnel); Pumpcrete gun operator; Tractor compressor drill combination operator; Tugger hoist operator (2 drum); Tunnel locomotive operator (over 30 tons)

GROUP 6: Heavy Duty Repairman

GROUP 7: Tunnel mole boring machine operator

ENGINEERS ZONES

$1.00 additional per hour for all of IMPERIAL County and the portions of KERN, RIVERSIDE & SAN BERNARDINO Counties as defined below:

That area within the following Boundary: Begin in San Bernardino County, approximately 3 miles NE of the intersection of I-15 and the California State line at that point which is the NW corner of Section 1, T17N,m R14E, San Bernardino Meridian. Continue W in a straight line to that point which is the SW corner of the northwest quarter of Section 6, T27S, R42E, Mt. Diablo Meridian. Continue North to the intersection with the Inyo County Boundary at that point which is the NE corner of the western half of the northern quarter of Section 6, T25S, R42E, MDM. Continue W along the Inyo and San Bernardino County boundary until the intersection with Kern County, as that point which is the SE corner of Section 34, T24S, R40E, MDM. Continue W along the Inyo and Kern County boundary until the intersection with Tulare County, at that point which is the SW corner of the SE quarter of Section 32, T24S, R37E, MDM. Continue W along the Kern and Tulare County boundary, until that point which is the NW corner of T25S, R32E, MDM. Continue S following R32E lines to the NW corner of T31S, R32E, MDM. Continue W to the NW corner of T31S, R31E, MDM. Continue S to the SW corner of T32S, R31E, MDM. Continue W to SW corner of SE quarter of Section 34, T32S, R30E, MDM. Continue S to SW corner of T11N, R17W, SBM. Continue E along south boundary of T11N, SBM to SW corner of T11N, R7W, SBM. Continue S to SW corner of T9N, R7W, SBM. Continue E along south boundary of T9N, SBM to SW corner of T9N, R1E, SBM. Continue S along west boundary of R1E, SMB to Riverside County line at the SW corner of T1S, R1E, SBM. Continue E along south boundary of T1s, SBM (Riverside County Line) to SW corner of T1S, R10E, SBM. Continue S along west boundary of R10E, SBM to Imperial County line at the SW corner of T8S, R10E, SBM. Continue W along Imperial and Riverside county line to NW corner of T9S, R9E, SBM. Continue S along the boundary between Imperial and San Diego Counties, along the west edge of R9E, SBM to the south boundary of Imperial County/California state line. Follow the California state line west to Arizona state line, then north to Nevada state line, then continuing NW back to start at the point which is the NW corner of Section 1, T17N, R14E, SBM

$1.00 additional per hour for portions of SAN LUIS OBISPO, KERN, SANTA BARBARA & VENTURA as defined below:

That area within the following Boundary: Begin approximately 5 miles north of the community of Cholame, on the Monterey County and San Luis Obispo County boundary at the NW corner of T25S, R16E, Mt. Diablo Meridian. Continue south along the west side of R16E to the SW corner of T30S, R16E, MDM. Continue E to SW corner of T30S, R17E, MDM. Continue S to SW corner of T31S, R17E, MDM. Continue E to SW corner of T31S, R18E, MDM. Continue S along West side of R18E, MDM as it crosses into San Bernardino Meridian numbering area and becomes R30W. Follow the west side of R30W, SBM to the SW corner of T9N, R30W, SBM. Continue E along the south edge of T9N, SBM to the Santa Barbara County and Ventura County boundary at that point whch is the SW corner of Section 34.T9N, R24W, SBM, continue S along the Ventura County line to that point which is the SW corner of the SE quarter of Section 32, T7N, R24W, SBM. Continue E along the south edge of T7N, SBM to the SE corner to T7N, R21W, SBM. Continue N along East side of R21W, SBM to Ventura County and Kern County boundary at the NE corner of T8N, R21W. Continue W along the Ventura County and Kern County boundary to the SE corner of T9N, R21W. Continue North along the East edge of R21W, SBM to the NE corner of T12N, R21W, SBM. Continue West along the north edge of T12N, SBM to the SE corner of T32S, R21E, MDM. [T12N SBM is a think strip between T11N SBM and T32S MDM]. Continue North along the East side of R21E, MDM to the Kings County and Kern County border at the NE corner of T25S, R21E, MDM, continue West along the Kings County and Kern County Boundary until the intersection of San Luis Obispo County. Continue west along the Kings County and San Luis Obispo County boundary until the intersection with Monterey County. Continue West along the Monterey County and San Luis Obispo County boundary to the beginning point at the NW corner of T25S, R16E, MDM.

$2.00 additional per hour for INYO and MONO Counties and the Northern portion of SAN BERNARDINO County as defined below:

That area within the following Boundary: Begin at the intersection of the northern boundary of Mono County and the California state line at the point which is the center of Section 17, T10N, R22E, Mt. Diablo Meridian. Continue S then SE along the entire western boundary of Mono County, until it

reaches Inyo County at the point which is the NE corner of the Western half of the NW quarter of Section 2, T8S, R29E, MDM. Continue SSE along the entire western boundary of Inyo County, until the intersection with Kern County at the point which is the SW corner of the SE 1/4 of Section 32, T24S, R37E, MDM. Continue E along the Inyo and Kern County boundary until the intersection with San Bernardino County at that point which is the SE corner of section 34, T24S, R40E, MDM. Continue E along the Inyo and San Bernardino County boundary until the point which is the NE corner of the Western half of the NW quarter of Section 6, T25S, R42E, MDM. Continue S to that point which is the SW corner of the NW quarter of Section 6, T27S, R42E, MDM. Continue E in a straight line to the California and Nevada state border at the point which is the NW corner of Section 1, T17N, R14E, San Bernardino Meridian. Then continue NW along the state line to the starting point, which is the center of Section 18, T10N, R22E, MDM.

REMAINING AREA NOT DEFINED ABOVE RECIEVES BASE RATE

---

* ENGI0012-004 08/01/2012

	Rates	Fringes
OPERATOR: Power Equipment (DREDGING)		
(1) Leverman	$ 45.40	20.00
(2) Dredge dozer	$ 40.93	20.00
(3) Deckmate	$ 40.82	20.00
(4) Winch operator (stern winch on dredge)	$ 40.27	20.00
(5) Fireman-Oiler, Deckhand, Bargeman, Leveehand	$ 39.73	20.00
(6) Barge Mate	$ 40.34	20.00

---

* IRON0002-004 07/01/2012

	Rates	Fringes
Ironworkers:		
Fence Erector	$ 26.58	16.345
Ornamental, Reinforcing and Structural	$ 33.00	24.985

PREMIUM PAY:

$6.00 additional per hour at the following locations:

China Lake Naval Test Station, Chocolate Mountains Naval Reserve-Niland,
Edwards AFB, Fort Irwin Military Station, Fort Irwin Training Center-Goldstone, San Clemente Island, San Nicholas Island, Susanville Federal Prison, 29 Palms - Marine Corps, U.S. Marine Base - Barstow, U.S. Naval Air Facility - Sealey, Vandenberg AFB

$4.00 additional per hour at the following locations:

Army Defense Language Institute - Monterey, Fallon Air Base, Naval Post Graduate School - Monterey, Yermo Marine Corps Logistics Center

$2.00 additional per hour at the following locations:

Port Hueneme, Port Mugu, U.S. Coast Guard Station - Two Rock

LABO0089-001 07/01/2011

	Rates	Fringes
LABORER (BUILDING and all other Residential Construction)		
Group 1	$ 26.50	14.92
Group 2	$ 26.96	14.92
Group 3	$ 27.37	14.92
Group 4	$ 28.21	14.92
Group 5	$ 32.33	14.92
LABORER (RESIDENTIAL CONSTRUCTION - See definition below)		
(1) Laborer	$ 23.48	14.13
(2) Cleanup, Landscaping, Fencing (chain link or wood)	$ 22.19	14.13

RESIDENTIAL DEFINITION: Wood or metal frame construction of single family residences, apartments and condominums - excluding (a) projects that exceed three stories over a garage level, (b) any utility work such as telephone, gas,

water, sewer and other utilities and (c) any fine grading work, utility work or paving work in the future street and public right-of-way; but including all rough grading work at the job site behind the existing right of way

LABORER CLASSIFICATIONS

GROUP 1: Cleaning and handling of panel forms; Concrete Screeding for Rought Strike-off; Concrete, water curing; Demolition laborer; Flagman; Gas, oil and/or water pipeline laborer; General Laborer; General clean-up laborer; Landscape laborer; Jetting laborer; Temporary water and air lines laborer; Material hoseman (walls, slabs, floors and decks); Plugging, filling of Shee-bolt holes; Dry packing of concrete; Railroad maintenance, Repair Trackman and road beds, Streetcar and railroad construction trac laborers; Slip form raisers; Slurry seal crews (mixer operator, applicator operator, squeegee man, Shuttle man, top man), filling of cracks by any method on any surface; Tarman and mortar man; Tool crib or tool house laborer; Window cleaner; Wire Mesh puling-all concrete pouring operations

GROUP 2: Asphalt Shoveler; Cement Dumper (on 1 yard or larger mixer and handling bulk cement); Cesspool digger and installer; Chucktender; Chute man, pouring concrete, the handling of the cute from ready mix trucks, such as walls, slabs, decks, floors, foundations, footings, curbs, gutters and sidewalks; Concrete curer-impervious membrane and form oiler; Cutting torch operator (demoliton); Guinea chaser; Headboard man-asphlt; Laborer,
packing rod steel and pans; membrane vapor barrier installer; Power broom sweepers (small); Riiprap, stonepaver, placing stone or wet sacked concrete; Roto scraper and tiller; Tank sealer and cleaner; Tree climber, faller, chain saw operator, Pittsburgh Chipper and similar type brush shredders; Underground laborers, including caisson bellower

GROUP 3: Buggymobile; Concrete cutting torch; Concrete cutting torch; Concrete pile cutter; Driller, jackhammer, 2 1/2 feet drill steel or longer; Dri Pak-it machine; High sealer (including drilling of same); Hydro seeder and similar type; Impact wrench, mult-plate; Kettlemen, potmen and mean applying asphalt, lay-kold, creosote, line caustic and similar type materials (applying means applying, dipping, brushing or handling of such materials for pipe

wrapping and waterproofing); Operators of pneumatic, gas, electric tools, vibratring machines, pavement breakers, air blasting, come-along, and similar mechanical tools not separately classified herein; Pipelayers back up man coating, grouting, making of joints, sealing, caulking, diapering and inclduing rubber gasket joints, pointing and any and all other services; Rotary Scarifier or multiple head concrete chipping scaarifier; Steel header board man and guideline setter; Tampers, Barko, Wacker and similar type; Trenching machine, handpropelled

GROUP 4: Asphalt raker, luterman, ironer, apshalt dumpman and asphalt spreader boxes (all types); Concrete core cutter (walls, floors or ceilings), Grinder or sander; Concrete saw man; cutting walls or flat work, scoring old or new concrete; Cribber, shorer, lagging, sheeting and trench bracing, hand-guided lagging hammer; Laser beam in connection with laborer's work; Oversize concrete vibrator operator 70 pounds and over; Pipelayer performing all services in the laying, installation and all forms of connection of pipe from the point of receiving pipe in the ditch until completion of oepration, including any and all forms of tubular material, whether pipe, metallic or non-metallic, conduit, and any other stationary type of tubular device used for the conveying of any substance or element, whether water, sewage, solid, gas, air or other product whatsoever and without regard to the nature of material from which the tubular material is fabricated; No joint pipe and stripping of same; Prefabricated manhole installer; Sandblaster (nozzleman), Porta shot-blast, water blasting

GROUP 5: Blasters Powderman-All work of loading holes, placing and blasting of all pwder and explosives of whatever type, regardless of method used for such loading and placing; Driller-all power drills, excluding jackhammer, whether core, diamond, wagon, track, multiple unit, and any and all other types of mechanical drills without regard to the form of motive power.

LABO0089-002 07/01/2010

	Rates	Fringes
LABORER (MASON TENDER).....	$ 27.11	14.38

LABO0089-004 07/01/2011

HEAVY AND HIGHWAY CONSTRUCTION

	Rates	Fringes
Laborers:		
GROUP 1	$ 26.50	14.92
GROUP 2	$ 26.96	14.92
GROUP 3	$ 27.37	14.92
GROUP 4	$ 28.21	14.92
GROUP 5	$ 32.33	14.92

LABORER CLASSIFICATIONS

GROUP 1: Laborer: General or Construction Laborer, Landscape Laborer. Asphalt Rubber Material Loader. Boring Machine Tender (outside), Carpenter Laborer (cleaning, handling, oiling & blowing of panel forms and lumber), Concrete Laborer, Concrete Screeding for rough strike-off, Concrete water curing. Concrete Curb & Gutter laborer, Certified Confined Space Laborer, Demolition laborer & Cleaning of Brick and lumber,Expansion Joint Caulking; Environmental Remediation, Monitoring Well, Toxic waste and Geotechnical Drill tender, Fine Grader, Fire Watcher, Limbers, Brush Loader, Pilers and Debris Handlers. flagman. Gas Oil and Water Pipeline Laborer. Material Hoseman (slabs, walls, floors, decks); Plugging, filling of shee bolt holes; Dry packing of concrete and patching; Post Holer Digger (manual); Railroad maintenance, repair trackman, road beds; Rigging & signaling; Scaler, Slip-Form Raisers, Filling cracks on any surface, tool Crib or Tool House Laborer, Traffic control (signs, barriers, barricades, delineator, cones etc.), Window Cleaner

GROUP 2: Asphalt abatement; Buggymobile; Cement dumper (on 1 yd. or larger mixers and handling bulk cement); Concrete curer, impervious membrane and form oiler; Chute man, pouring concrete; Concrete cutting torch; Concrete pile cutter; driller/Jackhammer, with drill steel 2 1/'2 feet or longer; Dry pak-it machine; Fence erector; Pipeline wrapper, gas, oil, water, pot tender & form man; Grout man; Installation of all asphalt overlay fabric and materials used for reinforcing asphalt; Irrigation laborer; Kettleman-Potman hot mop, includes applying asphalt, lay-klold, creosote, lime caustic and similar tyhpes of

materials (dipping, brushing, handling) and waterproofing; Membrane vapor barrier installer; Pipelayer backup man (coating, grouting, making of joints, sealing caulkiing, diapering including rubber basket joints, pointing); Rotary scarifier, multiple head concrete chipper; Rock slinger; Roto scraper & tiller; Sandblaster pot tender; Septic tank digger/installer; Tamper/wacker operator; Tank scaler & cleaner; Tar man & mortar man; Tree climber/faller, chainb saw operator, Pittsburgh chipper & similar type brush shredders.

GROUP 3: Asphalt, installation of all frabrics; Buggy Mobile Man, Bushing hammer; Compactor (all types), Concrete Curer - Impervious membrane, Form Oiler, Concrete Cutting Torch, Concrete Pile Cutter,Driller/Jackhammer with drill steel 2 1/2 ft or longer, Dry Pak-it machine, Fence erector including manual post hole digging, Gas oil or water Pipeline Wrapper - 6 ft pipe and over, Guradrail erector, Hydro seeder, Impact Wrench man (multi plate), kettleman-Potman Hot Mop includes applying Asphalt, Lay-Kold, Creosote, lime caustic and similar types of materials (dipping, brushing or handling) and waterproofing. Laser Beam in connection with Laborer work. High Scaler, Operators of Pneumatic Gas or Electric Tools, Vibrating Machines, Pavement Breakers, Air Blasting, Come-Alongs and similar mechanical tools, Remote-Controlled Robotic Tools in connection with Laborers work. Pipelayer Backup Man (Coating, grouting,m makeing of joints, sealing, caulking, diapering including rubber gasket joints, pointing and other services). Power Post Hole Digger, Rotary Scarifier (multiple head concrete chipper scarifier), Rock Slinger, Shot Blast equipment (8 to 48 inches), Steel Headerboard Man and Guideline Setter, Tamper/Wacker operator and similar types, Trenching Machine hand propelled.

GROUP 4: Any worker exposed to raw sewage. Asphalt Raker, Luteman, Asphalt Dumpman, Asphalt Spreader Boxes, Concrete Core Cutter, Concrete Saw Man, Cribber, Shorer, Head Rock Slinger. Installation of subsurface instrumentation, monitoring wells or points, remediation system installer; Laborer, asphalt-rubber distributor bootman; Oversize concrete vibrator operators, 70 pounds or over. Pipelayer, Prfefabricated Manhole Installer, Sandblast Nozzleman (Water Balsting-Porta Shot Blast), Traffic Lane Closure.

GROUP 5: Blasters Powderman-All work of loading holes, placing and blasting of all powder and explosives of whatever type, regardless of method used for such loading and placing; Horizontal directional driller, Boring system, Electronic traking, Driller: all power drills excluding jackhammer, whether core, diamond, wagon, track, multiple unit, and all other types of mechanical drills without regard to form of motive power. Environmental remediation, Monitoring well, Toxic waste and Geotechnical driller, Toxic waste removal. Welding in connection with Laborer's work.

LABO0300-008 08/05/2009

	Rates	Fringes
LABORER		
PLASTER CLEAN-UP LABORER	$ 26.65	15.95
PLASTER TENDER	$ 29.20	15.95

Work at Military Bases - $3.00 additional per hour:
Coronado Naval Amphibious Base, Fort Irwin, Marine Corps Air Station-29 Palms, Imperial Beach Naval Air Station, Marine Corps Logistics Supply Base, Marine Corps Pickle Meadows, Mountain Warfare Training Center, Naval Air Facility-Seeley, North Island Naval Air Station, Vandenberg AFB.

LABO0882-002 01/01/2010

	Rates	Fringes
Asbestos Removal Laborer	$ 26.15	11.65

SCOPE OF WORK: Includes site mobilization, initial site cleanup, site preparation, removal of asbestos-containing material and toxic waste, encapsulation, enclosure and disposal of asbestos- containing materials and toxic waste by hand or with equipment or machinery; scaffolding, fabrication of temporary wooden barriers and assembly of decontamination stations.

LABO1184-001 07/01/2011

	Rates	Fringes
Laborers: (HORIZONTAL DIRECTIONAL DRILLING)		
(1) Drilling Crew Laborer...	$ 28.01	11.48
(2) Vehicle Operator/Hauler.	$ 28.18	11.48
(3) Horizontal Directional Drill Operator.....	$ 30.03	11.48
(4) Electronic Tracking Locator.....	$ 32.03	11.48
Laborers: (STRIPING/SLURRY SEAL)		
GROUP 1.....	$ 28.50	14.56
GROUP 2.....	$ 29.80	14.56
GROUP 3.....	$ 31.81	14.56
GROUP 4.....	$ 33.55	14.56

LABORERS - STRIPING CLASSIFICATIONS

GROUP 1: Protective coating, pavement sealing, including repair and filling of cracks by any method on any surface in parking lots, game courts and playgrounds; carstops; operation of all related machinery and equipment; equipment repair technician

GROUP 2: Traffic surface abrasive blaster; pot tender - removal of all traffic lines and markings by any method (sandblasting, waterblasting, grinding, etc.) and preparation of surface for coatings. Traffic control person: controlling and directing traffic through both conventional and moving lane closures; operation of all related machinery and equipment

GROUP 3: Traffic delineating device applicator: Layout and application of pavement markers, delineating signs, rumble and traffic bars, adhesives, guide markers, other traffic delineating devices including traffic control. This category includes all traffic related surface preparation (sandblasting, waterblasting, grinding) as part of the application process. Traffic protective delineating system installer: removes, relocates, installs, permanently affixed roadside and parking delineation barricades, fencing, cable anchor, guard rail, reference signs, monument markers; operation of all related machinery and

equipment; power broom sweeper

GROUP 4: Striper: layout and application of traffic stripes and markings; hot thermo plastic; tape traffic stripes and markings, including traffic control; operation of all related machinery and equipment

---

PAIN0036-001 01/01/2012

	Rates	Fringes
Painters: (Including Lead Abatement)		
(1) Repaint (excludes San Diego County)	$ 26.05	10.35
(2) All Other Work	$ 29.32	10.35

REPAINT of any previously painted structure. Exceptions: work involving the aerospace industry, breweries, commercial recreational facilities, hotels which operate commercial establishments as part of hotel service, and sports facilities.

PAIN0036-010 10/05/2011

	Rates	Fringes
DRYWALL FINISHER/TAPER		
(1) Building & Heavy Construction	$ 33.22	13.81
(2) Residential Construction (Wood frame apartments, single family homes and multi-duplexes up to and including four stories)	$ 21.72	11.13

PAIN0036-012 10/01/2011

	Rates	Fringes
GLAZIER	$ 38.80	15.50

PAIN0036-019 02/01/2009

	Rates	Fringes
SOFT FLOOR LAYER	$ 26.77	11.75

PLAS0200-005 08/01/2011

	Rates	Fringes
PLASTERER	$ 35.29	12.05

NORTH ISLAND NAVAL AIR STATION, COLORADO NAVAL AMPHIBIOUS BASE, IMPERIAL BEACH NAVAL AIR STATION: $3.00 additional per hour.

PLAS0500-001 07/01/2012

	Rates	Fringes
CEMENT MASON/CONCRETE FINISHER		
GROUP 1	$ 26.47	12.10
GROUP 2	$ 28.12	12.10
GROUP 3	$ 30.75	12.60

CEMENT MASONS - work inside the building line, meeting the following criteria:

GROUP 1: Residential wood frame project of any size; work classified as Type III, IV or Type V construction; interior tenant improvement work regardless the size of the project; any wood frame project of four stories or less.

GROUP 2: Work classified as type I and II construction

GROUP 3: All other work

---

* PLUM0016-006 07/01/2012

	Rates	Fringes
PLUMBER, PIPEFITTER, STEAMFITTER		
Camp Pendleton	$ 46.10	19.68
Plumber and Pipefitter		
All other work except		

	Rates	Fringes
work on new additions and remodeling of bars, restaurant, stores and commercial buildings not to exceed 5,000 sq. ft. of floor space and work on strip malls, light commercial, tenant improvement and remodel work	$ 41.60	19.68
Work ONLY on new additions and remodeling of commercial buildings, bars, restaurants, and stores not to exceed 5,000 sq. ft. of floor space	$ 40.33	18.70
Work ONLY on strip malls, light commercial, tenant improvement and remodel work	$ 32.49	17.03

---

* PLUM0016-011 07/01/2012

	Rates	Fringes
PLUMBER/PIPEFITTER		
Residential	$ 33.63	15.60

---

* PLUM0345-001 07/01/2012

	Rates	Fringes
PLUMBER		
Landscape/Irrigation Fitter	$ 27.35	17.09
Sewer & Storm Drain Work	$ 31.00	16.01

ROOF0045-001 07/01/2012

	Rates	Fringes
ROOFER	$ 25.08	7.28

SFCA0669-001 04/01/2012

	Rates	Fringes
SPRINKLER FITTER	$ 34.18	18.51

SHEE0206-001 01/01/2012

	Rates	Fringes
SHEET METAL WORKER		
Camp Pendleton	$ 35.05	19.23
Except Camp Pendleton	$ 33.05	19.23
Sheet Metal Technician	$ 25.22	6.69

SHEET METAL TECHNICIAN - SCOPE:
a. Existing residential buildings, both single and multi-family, where each unit is heated and/or cooled by a separate system b. New single family residential buildings including tracts. c. New multi-family residential buildings, not exceeding five stories of living space in height, provided each unit is heated or cooled by a separate system. Hotels and motels are excluded. d. LIGHT COMMERCIAL WORK: Any sheet metal, heating and air conditioning work performed on a project where the total construction cost, excluding land, is under $1,000,000 e. TENANT IMPROVEMENT WORK: Any work necessary to finish interior spaces to conform to the occupants of commercial buildings, after completion of the building shell

---

* TEAM0036-001 07/01/2012

	Rates	Fringes
Truck drivers:		
GROUP 1	$ 15.40	20.50
GROUP 2	$ 24.99	20.50
GROUP 3	$ 25.19	20.50
GROUP 4	$ 25.39	20.50
GROUP 5	$ 25.59	20.50
GROUP 6	$ 26.09	20.50
GROUP 7	$ 27.59	20.50

FOOTNOTE: HAZMAT PAY: Work on a hazmat job, where hazmat certification is required, shall be paid, in addition to the classification working in, as follows: Levels A, B and

C - +$1.00 per hour. Workers shall be paid hazmat pay in increments of four (4) and eight (8) hours.

TRUCK DRIVER CLASSIFICATIONS

GROUP 1: Fuel Man, Swamper

GROUP 2: 2-axle Dump Truck, 2-axle Flat Bed,Concrete Pumping Truck, Industrial Lift Truck, Motorized Traffic Control, Pickup Truck on Jobsite

GROUP 3: 2-axle Water Truck, 3-axle Dump Truck, 3-axle Flat Bed, Erosion Control Nozzleman, Dump Crete Truck under 6.5 yd, Forklift 15,000 lbs and over, Prell Truck, Pipeline Work Truck Driver, Road Oil Spreader, Cement Distributor or Slurry Driver, Bootman, Ross Carrier

GROUP 4: Off-road Dump Truck under 35 tons 4-axles but less than 7-axles, Low-Bed Truck & Trailer, Transit Mix Trucks under 8 yd, 3-axle Water Truck, Erosion Control Driver, Grout Mixer Truck, Dump Crete 6.5yd and over, Dumpster Trucks, DW 10, DW 20 and over, Fuel Truck and Dynamite, Truck Greaser, Truck Mounted Mobile Sweeper 2-axle Winch Truck

GROUP 5: Off-road Dump Truck 35 tons and over, 7-axles or more, Transit Mix Trucks 8 yd and over, A-Frame Truck, Swedish Cranes

GROUP 6: Off-Road Special Equipment (including but not limited to Water Pull Tankers, Athey Wagons, DJB, B70 Wuclids or like Equipment)

GROUP 7: Repairman

WELDERS - Receive rate prescribed for craft performing operation to which welding is incidental.

==========

Unlisted classifications needed for work not included within the scope of the classifications listed may be added after award only as provided in the labor standards contract clauses

(29CFR 5.5 (a) (1) (ii)).

The body of each wage determination lists the classification and wage rates that have been found to be prevailing for the cited type(s) of construction in the area covered by the wage determination. The classifications are listed in alphabetical order of "identifiers" that indicate whether the particular rate is union or non-union.

Union Identifiers

An identifier enclosed in dotted lines beginning with characters other than "SU" denotes that the union classification and rate have found to be prevailing for that classification. Example: PLUM0198-005 07/01/2011. The first four letters , PLUM, indicate the international union and the four-digit number, 0198, that follows indicates the local union number or district council number where applicable , i.e., Plumbers Local 0198. The next number, 005 in the example, is an internal number used in processing the wage determination. The date, 07/01/2011, following these characters is the effective date of the most current negotiated rate/collective bargaining agreement which would be July 1, 2011 in the above example.

Union prevailing wage rates will be updated to reflect any changes in the collective bargaining agreements governing the rate.

Non-Union Identifiers

Classifications listed under an "SU" identifier were derived from survey data by computing average rates and are not union rates; however, the data used in computing these rates may include both union and non-union data. Example: SULA2004-007 5/13/2010. SU indicates the rates are not union rates, LA indicates the State of Louisiana; 2004 is the year of the survey; and 007 is an internal number used in producing the wage determination. A 1993 or later date, 5/13/2010, indicates the classifications and rates under that identifier were issued as a General Wage Determination on that date.

Survey wage rates will remain in effect and will not change until a new survey is conducted.

WAGE DETERMINATION APPEALS PROCESS

1.) Has there been an initial decision in the matter? This can be:

* an existing published wage determination
* a survey underlying a wage determination
* a Wage and Hour Division letter setting forth a position on a wage determination matter
* a conformance (additional classification and rate) ruling

On survey related matters, initial contact, including requests for summaries of surveys, should be with the Wage and Hour Regional Office for the area in which the survey was conducted because those Regional Offices have responsibility for the Davis-Bacon survey program. If the response from this initial contact is not satisfactory, then the process described in 2.) and 3.) should be followed.

With regard to any other matter not yet ripe for the formal process described here, initial contact should be with the Branch of Construction Wage Determinations. Write to:

Branch of Construction Wage Determinations
Wage and Hour Division
U.S. Department of Labor
200 Constitution Avenue, N.W.
Washington, DC 20210

2.) If the answer to the question in 1.) is yes, then an interested party (those affected by the action) can request review and reconsideration from the Wage and Hour Administrator (See 29 CFR Part 1.8 and 29 CFR Part 7). Write to:

Wage and Hour Administrator
U.S. Department of Labor
200 Constitution Avenue, N.W.
Washington, DC 20210

The request should be accompanied by a full statement of the interested party's position and by any information (wage payment data, project description, area practice material, etc.) that the requestor considers relevant to the issue.

3.) If the decision of the Administrator is not favorable, an interested party may appeal directly to the Administrative Review Board (formerly the Wage Appeals Board). Write to:

Administrative Review Board
U.S. Department of Labor
200 Constitution Avenue, N.W.
Washington, DC 20210

4.) All decisions by the Administrative Review Board are final.

==========

END OF GENERAL DECISION

REQUIRED CONTRACT PROVISIONS
FEDERAL-AID CONSTRUCTION CONTRACTS

I. General
II. Nondiscrimination
III. Nonsegregated Facilities
IV. Davis-Bacon and Related Act Provisions
V. Contract Work Hours and Safety Standards Act Provisions
VI. Subletting or Assigning the Contract
VII. Safety: Accident Prevention
VIII. False Statements Concerning Highway Projects
IX. Implementation of Clean Air Act and Federal Water Pollution Control Act
X. Compliance with Governmentwide Suspension and Debarment Requirements
XI. Certification Regarding Use of Contract Funds for Lobbying

I. GENERAL

1. Form FHWA-1273 must be physically incorporated in each construction contract funded under Title 23 (excluding emergency contracts solely intended for debris removal). The contractor (or subcontractor) must insert this form in each subcontract and further require its inclusion in all lower tier subcontracts (excluding purchase orders, rental agreements and other agreements for supplies or services).

The applicable requirements of Form FHWA-1273 are incorporated by reference for work done under any purchase order, rental agreement or agreement for other services. The prime contractor shall be responsible for compliance by any subcontractor, lower-tier subcontractor or service provider.

Form FHWA-1273 must be included in all Federal-aid design-build contracts, in all subcontracts and in lower tier subcontracts (excluding subcontracts for design services, purchase orders, rental agreements and other agreements for supplies or services). The design-builder shall be responsible for compliance by any subcontractor, lower-tier subcontractor or service provider.

Contracting agencies may reference Form FHWA-1273 in bid proposal or request for proposal documents, however, the Form FHWA-1273 must be physically incorporated (not referenced) in all contracts, subcontracts and lower-tier subcontracts (excluding purchase orders, rental agreements and other agreements for supplies or services related to a construction contract).

2. Subject to the applicability criteria noted in the following sections, these contract provisions shall apply to all work performed on the contract by the contractor's own organization and with the assistance of workers under the contractor's immediate superintendence and to all work performed on the contract by piecework, station work, or by subcontract.

3. A breach of any of the stipulations contained in these Required Contract Provisions may be sufficient grounds for withholding of progress payments, withholding of final payment, termination of the contract, suspension / debarment or any other action determined to be appropriate by the contracting agency and FHWA.

4. Selection of Labor: During the performance of this contract, the contractor shall not use convict labor for any purpose within the limits of a construction project on a Federal-aid highway unless it is labor performed by convicts who are on parole, supervised release, or probation. The term Federal-aid highway does not include roadways functionally classified as local roads or rural minor collectors.

II. NONDISCRIMINATION

The provisions of this section related to 23 CFR Part 230 are applicable to all Federal-aid construction contracts and to all related construction subcontracts of $10,000 or more. The provisions of 23 CFR Part 230 are not applicable to material supply, engineering, or architectural service contracts.

In addition, the contractor and all subcontractors must comply with the following policies: Executive Order 11246, 41 CFR 60, 29 CFR 1625-1627, Title 23 USC Section 140, the Rehabilitation Act of 1973, as amended (29 USC 794), Title VI of the Civil Rights Act of 1964, as amended, and related regulations including 49 CFR Parts 21, 26 and 27; and 23 CFR Parts 200, 230, and 633.

The contractor and all subcontractors must comply with: the requirements of the Equal Opportunity Clause in 41 CFR 60-1.4(b) and, for all construction contracts exceeding $10,000, the Standard Federal Equal Employment Opportunity Construction Contract Specifications in 41 CFR 60-4.3.

Note: The U.S. Department of Labor has exclusive authority to determine compliance with Executive Order 11246 and the policies of the Secretary of Labor including 41 CFR 60, and 29 CFR 1625-1627. The contracting agency and the FHWA have the authority and the responsibility to ensure compliance with Title 23 USC Section 140, the Rehabilitation Act of 1973, as amended (29 USC 794), and Title VI of the Civil Rights Act of 1964, as amended, and related regulations including 49 CFR Parts 21, 26 and 27; and 23 CFR Parts 200, 230, and 633.

The following provision is adopted from 23 CFR 230, Appendix A, with appropriate revisions to conform to the U.S. Department of Labor (US DOL) and FHWA requirements.

1. Equal Employment Opportunity: Equal employment opportunity (EEO) requirements not to discriminate and to take affirmative action to assure equal opportunity as set forth under laws, executive orders, rules, regulations (28 CFR 35, 29 CFR 1630, 29 CFR 1625-1627, 41 CFR 60 and 49 CFR 27) and orders of the Secretary of Labor as modified by the provisions prescribed herein, and imposed pursuant to 23 U.S.C. 140 shall constitute the EEO and specific affirmative action standards for the contractor's project activities under this contract. The provisions of the Americans with Disabilities Act of 1990 (42 U.S.C. 12101 et seq.) set forth under 28 CFR 35 and 29 CFR 1630 are incorporated by reference in this contract. In the execution of this contract, the contractor agrees to comply with the following minimum specific requirement activities of EEO:

a. The contractor will work with the contracting agency and the Federal Government to ensure that it has made every good faith effort to provide equal opportunity with respect to all of its terms and conditions of employment and in their review of activities under the contract.

b. The contractor will accept as its operating policy the following statement:

"It is the policy of this Company to assure that applicants are employed, and that employees are treated during employment, without regard to their race, religion, sex, color, national origin, age or disability. Such action shall include: employment, upgrading, demotion, or transfer; recruitment or recruitment advertising; layoff or termination; rates of pay or other forms of compensation; and selection for training, including apprenticeship, pre-apprenticeship, and/or on-the-job training."

2. EEO Officer: The contractor will designate and make known to the contracting officers an EEO Officer who will have the responsibility for and must be capable of effectively administering and promoting an active EEO program and who must be assigned adequate authority and responsibility to do so.

3. Dissemination of Policy: All members of the contractor's staff who are authorized to hire, supervise, promote, and discharge employees, or who recommend such action, or who are substantially involved in such action, will be made fully cognizant of, and will implement, the contractor's EEO policy and contractual responsibilities to provide EEO in each grade and classification of employment. To ensure that the above agreement will be met, the following actions will be taken as a minimum:

a. Periodic meetings of supervisory and personnel office employees will be conducted before the start of work and then not less often than once every six months, at which time the contractor's EEO policy and its implementation will be reviewed and explained. The meetings will be conducted by the EEO Officer.

b. All new supervisory or personnel office employees will be given a thorough indoctrination by the EEO Officer, covering all major aspects of the contractor's EEO obligations within thirty days following their reporting for duty with the contractor.

c. All personnel who are engaged in direct recruitment for the project will be instructed by the EEO Officer in the contractor's procedures for locating and hiring minorities and women.

d. Notices and posters setting forth the contractor's EEO policy will be placed in areas readily accessible to employees, applicants for employment and potential employees.

e. The contractor's EEO policy and the procedures to implement such policy will be brought to the attention of employees by means of meetings, employee handbooks, or other appropriate means.

4. Recruitment: When advertising for employees, the contractor will include in all advertisements for employees the notation: "An Equal Opportunity Employer." All such advertisements will be placed in publications having a large circulation among minorities and women in the area from which the project work force would normally be derived.

a. The contractor will, unless precluded by a valid bargaining agreement, conduct systematic and direct recruitment through public and private employee referral sources likely to yield qualified minorities and women. To meet this requirement, the contractor will identify sources of potential minority group employees, and establish with such identified sources procedures whereby minority and women applicants may be referred to the contractor for employment consideration.

b. In the event the contractor has a valid bargaining agreement providing for exclusive hiring hall referrals, the contractor is expected to observe the provisions of that agreement to the extent that the system meets the contractor's compliance with EEO contract provisions. Where implementation of such an agreement has the effect of discriminating against minorities or women, or obligates the contractor to do the same, such implementation violates Federal nondiscrimination provisions.

c. The contractor will encourage its present employees to refer minorities and women as applicants for employment. Information and procedures with regard to referring such applicants will be discussed with employees.

5. Personnel Actions: Wages, working conditions, and employee benefits shall be established and administered, and personnel actions of every type, including hiring, upgrading, promotion, transfer, demotion, layoff, and termination, shall be taken without regard to race, color, religion, sex, national origin, age or disability. The following procedures shall be followed:

a. The contractor will conduct periodic inspections of project sites to insure that working conditions and employee facilities do not indicate discriminatory treatment of project site personnel.

b. The contractor will periodically evaluate the spread of wages paid within each classification to determine any evidence of discriminatory wage practices.

c. The contractor will periodically review selected personnel actions in depth to determine whether there is evidence of discrimination. Where evidence is found, the contractor will promptly take corrective action. If the review indicates that the discrimination may extend beyond the actions reviewed, such corrective action shall include all affected persons.

d. The contractor will promptly investigate all complaints of alleged discrimination made to the contractor in connection with its obligations under this contract, will attempt to resolve such complaints, and will take appropriate corrective action within a reasonable time. If the investigation indicates that the discrimination may affect persons other than the complainant, such corrective action shall include such other persons. Upon completion of each investigation, the contractor will inform every complainant of all of their avenues of appeal.

6. Training and Promotion:

a. The contractor will assist in locating, qualifying, and increasing the skills of minorities and women who are applicants for employment or current employees. Such efforts should be aimed at developing full journey level status employees in the type of trade or job classification involved.

b. Consistent with the contractor's work force requirements and as permissible under Federal and State regulations, the contractor shall make full use of training programs, i.e., apprenticeship, and on-the-job training programs for the geographical area of contract performance. In the event a special provision for training is provided under this contract, this subparagraph will be superseded as indicated in the special provision. The contracting agency may reserve training positions for persons who receive welfare assistance in accordance with 23 U.S.C. 140(a).

c. The contractor will advise employees and applicants for employment of available training programs and entrance requirements for each.

d. The contractor will periodically review the training and promotion potential of employees who are minorities and women and will encourage eligible employees to apply for such training and promotion.

7. Unions: If the contractor relies in whole or in part upon unions as a source of employees, the contractor will use good faith efforts to obtain the cooperation of such unions to increase opportunities for minorities and women. Actions by the contractor, either directly or through a contractor's association acting as agent, will include the procedures set forth below:

a. The contractor will use good faith efforts to develop, in cooperation with the unions, joint training programs aimed toward qualifying more minorities and women for membership in the unions and increasing the skills of minorities and women so that they may qualify for higher paying employment.

b. The contractor will use good faith efforts to incorporate an EEO clause into each union agreement to the end that such union will be contractually bound to refer applicants without regard to their race, color, religion, sex, national origin, age or disability.

c. The contractor is to obtain information as to the referral practices and policies of the labor union except that to the extent such information is within the exclusive possession of the labor union and such labor union refuses to furnish such information to the contractor, the contractor shall so certify to the contracting agency and shall set forth what efforts have been made to obtain such information.

d. In the event the union is unable to provide the contractor with a reasonable flow of referrals within the time limit set forth in the collective bargaining agreement, the contractor will, through independent recruitment efforts, fill the employment vacancies without regard to race, color, religion, sex, national origin, age or disability; making full efforts to obtain qualified and/or qualifiable minorities and women. The failure of a union to provide sufficient referrals (even though it is obligated to provide exclusive referrals under the terms of a collective bargaining agreement) does not relieve the contractor from the requirements of this paragraph. In the event the union referral practice prevents the contractor from meeting the obligations pursuant to Executive Order 11246, as amended, and these special provisions, such contractor shall immediately notify the contracting agency.

8. Reasonable Accommodation for Applicants / Employees with Disabilities: The contractor must be familiar with the requirements for and comply with the Americans with Disabilities Act and all rules and regulations established there under. Employers must provide reasonable accommodation in all employment activities unless to do so would cause an undue hardship.

9. Selection of Subcontractors, Procurement of Materials and Leasing of Equipment: The contractor shall not discriminate on the grounds of race, color, religion, sex, national origin, age or disability in the selection and retention of subcontractors, including procurement of materials and leases of equipment. The contractor shall take all necessary and reasonable steps to ensure nondiscrimination in the administration of this contract.

a. The contractor shall notify all potential subcontractors and suppliers and lessors of their EEO obligations under this contract.

b. The contractor will use good faith efforts to ensure subcontractor compliance with their EEO obligations.

10. Assurance Required by 49 CFR 26.13(b):

a. The requirements of 49 CFR Part 26 and the State DOT's U.S. DOT-approved DBE program are incorporated by reference.

b. The contractor or subcontractor shall not discriminate on the basis of race, color, national origin, or sex in the performance of this contract. The contractor shall carry out applicable requirements of 49 CFR Part 26 in the award and administration of DOT-assisted contracts. Failure by the contractor to carry out these requirements is a material breach of this contract, which may result in the termination of this contract or such other remedy as the contracting agency deems appropriate.

11. Records and Reports: The contractor shall keep such records as necessary to document compliance with the EEO requirements. Such records shall be retained for a period of three years following the date of the final payment to the contractor for all contract work and shall be available at reasonable times and places for inspection by authorized representatives of the contracting agency and the FHWA.

a. The records kept by the contractor shall document the following:

(1) The number and work hours of minority and non-minority group members and women employed in each work classification on the project;

(2) The progress and efforts being made in cooperation with unions, when applicable, to increase employment opportunities for minorities and women; and

(3) The progress and efforts being made in locating, hiring, training, qualifying, and upgrading minorities and women;

b. The contractors and subcontractors will submit an annual report to the contracting agency each July for the duration of the project, indicating the number of minority, women, and non-minority group employees currently engaged in each work classification required by the contract work. This information is to be reported on Form FHWA-1391. The staffing data should represent the project work force on board in all or any part of the last payroll period preceding the end of July. If on-the-job training is being required by special provision, the contractor will be required to collect and report training data. The employment data should reflect the work force on board during all or any part of the last payroll period preceding the end of July.

III. NONSEGREGATED FACILITIES

This provision is applicable to all Federal-aid construction contracts and to all related construction subcontracts of $10,000 or more.

The contractor must ensure that facilities provided for employees are provided in such a manner that segregation on the basis of race, color, religion, sex, or national origin cannot result. The contractor may neither require such segregated use by written or oral policies nor tolerate such use by employee custom. The contractor's obligation extends further to ensure that its employees are not assigned to perform their services at any location, under the contractor's control, where the facilities are segregated. The term "facilities" includes waiting rooms, work areas, restaurants and other eating areas, time clocks, restrooms, washrooms, locker rooms, and other storage or dressing areas, parking lots, drinking fountains, recreation or entertainment areas, transportation, and housing provided for employees. The contractor shall provide separate or single-user restrooms and necessary dressing or sleeping areas to assure privacy between sexes.

IV. DAVIS-BACON AND RELATED ACT PROVISIONS

This section is applicable to all Federal-aid construction projects exceeding $2,000 and to all related subcontracts and lower-tier subcontracts (regardless of subcontract size). The requirements

apply to all projects located within the right-of-way of a roadway that is functionally classified as Federal-aid highway. This excludes roadways functionally classified as local roads or rural minor collectors, which are exempt. Contracting agencies may elect to apply these requirements to other projects.

The following provisions are from the U.S. Department of Labor regulations in 29 CFR 5.5 "Contract provisions and related matters" with minor revisions to conform to the FHWA-1273 format and FHWA program requirements.

1. Minimum wages

a. All laborers and mechanics employed or working upon the site of the work, will be paid unconditionally and not less often than once a week, and without subsequent deduction or rebate on any account (except such payroll deductions as are permitted by regulations issued by the Secretary of Labor under the Copeland Act (29 CFR part 3)), the full amount of wages and bona fide fringe benefits (or cash equivalents thereof) due at time of payment computed at rates not less than those contained in the wage determination of the Secretary of Labor which is attached hereto and made a part hereof, regardless of any contractual relationship which may be alleged to exist between the contractor and such laborers and mechanics.

Contributions made or costs reasonably anticipated for bona fide fringe benefits under section 1(b)(2) of the Davis-Bacon Act on behalf of laborers or mechanics are considered wages paid to such laborers or mechanics, subject to the provisions of paragraph 1.d. of this section; also, regular contributions made or costs incurred for more than a weekly period (but not less often than quarterly) under plans, funds, or programs which cover the particular weekly period, are deemed to be constructively made or incurred during such weekly period. Such laborers and mechanics shall be paid the appropriate wage rate and fringe benefits on the wage determination for the classification of work actually performed, without regard to skill, except as provided in 29 CFR 5.5(a)(4). Laborers or mechanics performing work in more than one classification may be compensated at the rate specified for each classification for the time actually worked therein: Provided, That the employer's payroll records accurately set forth the time spent in each classification in which work is performed. The wage determination (including any additional classification and wage rates conformed under paragraph 1.b. of this section) and the Davis-Bacon poster (WH–1321) shall be posted at all times by the contractor and its subcontractors at the site of the work in a prominent and accessible place where it can be easily seen by the workers.

b. (1) The contracting officer shall require that any class of laborers or mechanics, including helpers, which is not listed in the wage determination and which is to be employed under the contract shall be classified in conformance with the wage determination. The contracting officer shall approve an additional classification and wage rate and fringe benefits therefore only when the following criteria have been met:

(i) The work to be performed by the classification requested is not performed by a classification in the wage determination; and

(ii) The classification is utilized in the area by the construction industry; and

(iii) The proposed wage rate, including any bona fide fringe benefits, bears a reasonable relationship to the wage rates contained in the wage determination.

(2) If the contractor and the laborers and mechanics to be employed in the classification (if known), or their representatives, and the contracting officer agree on the classification and wage rate (including the amount designated for fringe benefits where appropriate), a report of the action taken shall be sent by the contracting officer to the Administrator of the Wage and Hour Division, Employment Standards Administration, U.S. Department of Labor, Washington, DC 20210. The Administrator, or an authorized representative, will approve, modify, or disapprove every additional classification action within 30 days of receipt and so advise the contracting officer or will notify the contracting officer within the 30-day period that additional time is necessary.

(3) In the event the contractor, the laborers or mechanics to be employed in the classification or their representatives, and the contracting officer do not agree on the proposed classification and wage rate (including the amount designated for fringe benefits, where appropriate), the contracting officer shall refer the questions, including the views of all interested parties and the recommendation of the contracting officer, to the Wage and Hour Administrator for determination. The Wage and Hour Administrator, or an authorized representative, will issue a determination within 30 days of receipt and so advise the contracting officer or will notify the contracting officer within the 30-day period that additional time is necessary.

(4) The wage rate (including fringe benefits where appropriate) determined pursuant to paragraphs 1.b.(2) or 1.b.(3) of this section, shall be paid to all workers performing work in the classification under this contract from the first day on which work is performed in the classification.

c. Whenever the minimum wage rate prescribed in the contract for a class of laborers or mechanics includes a fringe benefit which is not expressed as an hourly rate, the contractor shall either pay the benefit as stated in the wage determination or shall pay another bona fide fringe benefit or an hourly cash equivalent thereof.

d. If the contractor does not make payments to a trustee or other third person, the contractor may consider as part of the wages of any laborer or mechanic the amount of any costs reasonably anticipated in providing bona fide fringe benefits under a plan or program, Provided, That the Secretary of Labor has found, upon the written request of the contractor, that the applicable standards of the Davis-Bacon Act have been met. The Secretary of Labor may require the contractor to set aside in a separate account assets for the meeting of obligations under the plan or program.

2. Withholding

The contracting agency shall upon its own action or upon written request of an authorized representative of the Department of Labor, withhold or cause to be withheld from the contractor under this contract, or any other Federal contract with the same prime contractor, or any other federally-assisted contract subject to Davis-Bacon prevailing wage requirements, which is held by the same prime contractor, so much of the accrued payments or advances as may be considered necessary to pay laborers and mechanics, including apprentices, trainees, and helpers, employed by the contractor or any subcontractor the full amount of wages required by the contract. In the event of failure to pay any laborer or mechanic, including any apprentice, trainee, or helper, employed or working on the site of the work, all or part of the wages required by the contract, the contracting agency may, after written notice to the contractor, take such action as may be necessary to cause the suspension of any further payment, advance, or guarantee of funds until such violations have ceased.

3. Payrolls and basic records

a. Payrolls and basic records relating thereto shall be maintained by the contractor during the course of the work and preserved for a period of three years thereafter for all laborers and mechanics working at the site of the work. Such records shall contain the name, address, and social security number of each such worker, his or her correct classification, hourly rates of wages paid (including rates of contributions or costs anticipated for bona fide fringe benefits or cash equivalents thereof of the types described in section 1(b)(2)(B) of the Davis-Bacon Act), daily and weekly number of hours worked, deductions made and actual wages paid. Whenever the Secretary of Labor has found under 29 CFR 5.5(a)(1)(iv) that the wages of any laborer or mechanic include the amount of any costs reasonably anticipated in providing benefits under a plan or program described in section 1(b)(2)(B) of the Davis-Bacon Act, the contractor shall maintain records which show that the commitment to provide such benefits is enforceable, that the plan or program is financially responsible, and that the plan or program has been communicated in writing to the laborers or mechanics affected, and records which show the costs anticipated or the actual cost incurred in providing such benefits. Contractors employing apprentices or trainees under approved programs shall maintain written evidence of the registration of apprenticeship programs and certification of trainee programs, the registration of the apprentices and trainees, and the ratios and wage rates prescribed in the applicable programs.

b. (1) The contractor shall submit weekly for each week in which any contract work is performed a copy of all payrolls to the contracting agency. The payrolls submitted shall set out accurately and completely all of the information required to be maintained under 29 CFR 5.5(a)(3)(i), except that full social security numbers and home addresses shall not be included on weekly transmittals. Instead the payrolls shall only need to include an individually identifying number for each employee (e.g. , the last four digits of the employee's social security number). The required weekly payroll information may be submitted in any form desired. Optional Form WH–347 is available for this purpose from the Wage and Hour Division Web site at http://www.dol.gov/esa/whd/forms/wh347instr.htm or its successor site. The prime contractor is responsible for the submission of copies of payrolls by all subcontractors. Contractors and subcontractors shall maintain the full social security number and current address of each covered worker, and shall provide them upon request to the contracting agency for transmission to the State DOT, the FHWA or the Wage and Hour Division of the Department of Labor for purposes of an investigation or audit of compliance with prevailing wage requirements. It is not a violation of this section for a prime contractor to require a subcontractor to provide addresses and social security numbers to the prime contractor for its own records, without weekly submission to the contracting agency..

(2) Each payroll submitted shall be accompanied by a "Statement of Compliance," signed by the contractor or subcontractor or his or her agent who pays or supervises the payment of the persons employed under the contract and shall certify the following:

(i) That the payroll for the payroll period contains the information required to be provided under §5.5 (a)(3)(ii) of Regulations, 29 CFR part 5, the appropriate information is being maintained under §5.5 (a)(3)(i) of Regulations, 29 CFR part 5, and that such information is correct and complete;

(ii) That each laborer or mechanic (including each helper, apprentice, and trainee) employed on the contract during the payroll period has been paid the full weekly wages earned, without rebate, either directly or indirectly, and that no deductions have been made either directly or indirectly from the full wages earned, other than permissible deductions as set forth in Regulations, 29 CFR part 3;

(iii) That each laborer or mechanic has been paid not less than the applicable wage rates and fringe benefits or cash equivalents for the classification of work performed, as specified in the applicable wage determination incorporated into the contract.

(3) The weekly submission of a properly executed certification set forth on the reverse side of Optional Form WH–347 shall satisfy the requirement for submission of the "Statement of Compliance" required by paragraph 3.b.(2) of this section.

(4) The falsification of any of the above certifications may subject the contractor or subcontractor to civil or criminal prosecution under section 1001 of title 18 and section 231 of title 31 of the United States Code.

c. The contractor or subcontractor shall make the records required under paragraph 3.a. of this section available for inspection, copying, or transcription by authorized representatives of the contracting agency, the State DOT, the FHWA, or the Department of Labor, and shall permit such representatives to interview employees during working hours on the job. If the contractor or subcontractor fails to submit the required records or to make them available, the FHWA may, after written notice to the contractor, the contracting agency or the State DOT, take such action as may be necessary to cause the suspension of any further payment, advance, or guarantee of funds. Furthermore, failure to submit the required records upon request or to make such records available may be grounds for debarment action pursuant to 29 CFR 5.12.

4. Apprentices and trainees

a. Apprentices (programs of the USDOL).

Apprentices will be permitted to work at less than the predetermined rate for the work they performed when they are employed pursuant to and individually registered in a bona fide apprenticeship program registered with the U.S. Department of Labor, Employment and Training Administration, Office of Apprenticeship Training, Employer and Labor Services, or with a State Apprenticeship Agency recognized by the Office, or if a person is employed in his or her first 90 days of probationary employment as an apprentice in such an apprenticeship program, who is not individually registered in the program, but who has been certified by the Office of Apprenticeship Training, Employer and Labor Services or a State Apprenticeship Agency (where appropriate) to be eligible for probationary employment as an apprentice.

The allowable ratio of apprentices to journeymen on the job site in any craft classification shall not be greater than the ratio permitted to the contractor as to the entire work force under the registered program. Any worker listed on a payroll at an apprentice wage rate, who is not registered or otherwise employed as stated above, shall be paid not less than the applicable wage rate on the wage determination for the classification of work actually performed. In addition, any apprentice performing work on the job site in excess of the ratio permitted under the registered program shall be paid not less than the applicable wage rate on the wage determination for the work actually performed. Where a contractor is performing construction on a project in a locality other than that in which its program is registered, the ratios and wage rates (expressed in percentages of the journeyman's hourly rate) specified in the contractor's or subcontractor's registered program shall be observed.

Every apprentice must be paid at not less than the rate specified in the registered program for the apprentice's level of progress, expressed as a percentage of the journeymen hourly rate specified in the applicable wage determination. Apprentices shall be paid fringe benefits in accordance with the provisions of the apprenticeship program. If the apprenticeship program does not specify fringe benefits, apprentices must be paid the full amount of fringe benefits listed on the wage determination for the applicable classification. If the Administrator determines that a different practice prevails for the applicable apprentice classification, fringes shall be paid in accordance with that determination.

In the event the Office of Apprenticeship Training, Employer and Labor Services, or a State Apprenticeship Agency recognized by the Office, withdraws approval of an apprenticeship program, the contractor will no longer be permitted to utilize apprentices at less than the applicable predetermined rate for the work performed until an acceptable program is approved.

b. Trainees (programs of the USDOL).

Except as provided in 29 CFR 5.16, trainees will not be permitted to work at less than the predetermined rate for the work performed unless they are employed pursuant to and individually registered in a program which has received prior approval, evidenced by formal certification by the U.S. Department of Labor, Employment and Training Administration.

The ratio of trainees to journeymen on the job site shall not be greater than permitted under the plan approved by the Employment and Training Administration.

Every trainee must be paid at not less than the rate specified in the approved program for the trainee's level of progress, expressed as a percentage of the journeyman hourly rate specified in the applicable wage determination. Trainees shall be paid fringe benefits in accordance with the provisions of the trainee program. If the trainee program does not mention fringe benefits, trainees shall be paid the full amount of fringe benefits listed on the wage determination unless the Administrator of the Wage and Hour Division determines that there is an apprenticeship program associated with the corresponding journeyman wage rate on the wage determination which provides for less than full fringe benefits for apprentices. Any employee listed on the payroll at a trainee rate who is not registered and participating in a training plan approved by the Employment and Training Administration shall be paid not less than the applicable wage rate on the wage determination for the classification of work actually performed. In addition, any trainee performing work on the job site in excess of the ratio permitted under the registered program shall be paid not less than the applicable wage rate on the wage determination for the work actually performed.

In the event the Employment and Training Administration withdraws approval of a training program, the contractor will no longer be permitted to utilize trainees at less than the applicable predetermined rate for the work performed until an acceptable program is approved.

c. Equal employment opportunity. The utilization of apprentices, trainees and journeymen under this part shall be in conformity with the equal employment opportunity requirements of Executive Order 11246, as amended, and 29 CFR part 30.

d. Apprentices and Trainees (programs of the U.S. DOT).

Apprentices and trainees working under apprenticeship and skill training programs which have been certified by the Secretary of Transportation as promoting EEO in connection with Federal-aid highway construction programs are not subject to the requirements of paragraph 4 of this Section IV. The straight time hourly wage rates for apprentices and trainees under such programs will be established by the particular programs. The ratio of apprentices and trainees to journeymen shall not be greater than permitted by the terms of the particular program.

5. Compliance with Copeland Act requirements. The contractor shall comply with the requirements of 29 CFR part 3, which are incorporated by reference in this contract.

6. Subcontracts. The contractor or subcontractor shall insert Form FHWA-1273 in any subcontracts and also require the subcontractors to include Form FHWA-1273 in any lower tier subcontracts. The prime contractor shall be responsible for the compliance by any subcontractor or lower tier subcontractor with all the contract clauses in 29 CFR 5.5.

7. Contract termination: debarment. A breach of the contract clauses in 29 CFR 5.5 may be grounds for termination of the contract, and for debarment as a contractor and a subcontractor as provided in 29 CFR 5.12.

8. Compliance with Davis-Bacon and Related Act requirements. All rulings and interpretations of the Davis-Bacon and Related Acts contained in 29 CFR parts 1, 3, and 5 are herein incorporated by reference in this contract.

9. Disputes concerning labor standards. Disputes arising out of the labor standards provisions of this contract shall not be subject to the general disputes clause of this contract. Such disputes shall be resolved in accordance with the procedures of the Department of Labor set forth in 29 CFR parts 5, 6, and 7. Disputes within the meaning of this clause include disputes between the contractor (or any of its subcontractors) and the contracting agency, the U.S. Department of Labor, or the employees or their representatives.

10. Certification of eligibility.

a. By entering into this contract, the contractor certifies that neither it (nor he or she) nor any person or firm who has an interest in the contractor's firm is a person or firm ineligible to be awarded Government contracts by virtue of section 3(a) of the Davis-Bacon Act or 29 CFR 5.12(a)(1).

b. No part of this contract shall be subcontracted to any person or firm ineligible for award of a Government contract by virtue of section 3(a) of the Davis-Bacon Act or 29 CFR 5.12(a)(1).

c. The penalty for making false statements is prescribed in the U.S. Criminal Code, 18 U.S.C. 1001.

V. CONTRACT WORK HOURS AND SAFETY STANDARDS ACT

The following clauses apply to any Federal-aid construction contract in an amount in excess of $100,000 and subject to the overtime provisions of the Contract Work Hours and Safety Standards Act.

These clauses shall be inserted in addition to the clauses required by 29 CFR 5.5(a) or 29 CFR 4.6. As used in this paragraph, the terms laborers and mechanics include watchmen and guards.

1. Overtime requirements. No contractor or subcontractor contracting for any part of the contract work which may require or involve the employment of laborers or mechanics shall require or permit any such laborer or mechanic in any workweek in which he or she is employed on such work to work in excess of forty hours in such workweek unless such laborer or mechanic receives compensation at a rate not less than one and one-half times the basic rate of pay for all hours worked in excess of forty hours in such workweek.

2. Violation; liability for unpaid wages; liquidated damages. In the event of any violation of the clause set forth in paragraph (1.) of this section, the contractor and any subcontractor responsible therefor shall be liable for the unpaid wages. In addition, such contractor and subcontractor shall be liable to the United States (in the case of work done under contract for the District of Columbia or a territory, to such District or to such territory), for liquidated damages. Such liquidated damages shall be computed with respect to each individual laborer or mechanic, including watchmen and guards, employed in violation of the clause set forth in paragraph (1.) of this section, in the sum of $10 for each calendar day on which such individual was required or permitted to work in excess of the standard workweek of forty hours without payment of the overtime wages required by the clause set forth in paragraph (1.) of this section.

3. Withholding for unpaid wages and liquidated damages. The FHWA or the contacting agency shall upon its own action or upon written request of an authorized representative of the Department of Labor withhold or cause to be withheld, from any moneys payable on account of work performed by the contractor or subcontractor under any such contract or any other Federal contract with the same prime contractor, or any other federally-assisted contract subject to the Contract Work Hours and Safety Standards Act, which is held by the same prime contractor, such sums as may be determined to be necessary to satisfy any liabilities of such contractor or subcontractor for unpaid wages and liquidated damages as provided in the clause set forth in paragraph (2.) of this section.

4. Subcontracts. The contractor or subcontractor shall insert in any subcontracts the clauses set forth in paragraph (1.) through (4.) of this section and also a clause requiring the subcontractors to include these clauses in any lower tier subcontracts. The prime contractor shall be responsible for compliance by any subcontractor or lower tier subcontractor with the clauses set forth in paragraphs (1.) through (4.) of this section.

VI. SUBLETTING OR ASSIGNING THE CONTRACT

This provision is applicable to all Federal-aid construction contracts on the National Highway System.

1. The contractor shall perform with its own organization contract work amounting to not less than 30 percent (or a greater percentage if specified elsewhere in the contract) of the total original contract price, excluding any specialty items designated by the contracting agency. Specialty items may be performed by subcontract and the amount of any such specialty items performed may be deducted from the total original contract price before computing the amount of work required to be performed by the contractor's own organization (23 CFR 635.116).

a. The term "perform work with its own organization" refers to workers employed or leased by the prime contractor, and equipment owned or rented by the prime contractor, with or without operators. Such term does not include employees or equipment of a subcontractor or lower tier subcontractor, agents of the prime contractor, or any other assignees. The term may include payments for the costs of hiring leased employees from an employee leasing firm meeting all relevant Federal and State regulatory requirements. Leased employees may only be included in this term if the prime contractor meets all of the following conditions:

(1) the prime contractor maintains control over the supervision of the day-to-day activities of the leased employees;

(2) the prime contractor remains responsible for the quality of the work of the leased employees;

(3) the prime contractor retains all power to accept or exclude individual employees from work on the project; and

(4) the prime contractor remains ultimately responsible for the payment of predetermined minimum wages, the submission of payrolls, statements of compliance and all other Federal regulatory requirements.

b. "Specialty Items" shall be construed to be limited to work that requires highly specialized knowledge, abilities, or equipment not ordinarily available in the type of contracting organizations qualified and expected to bid or propose on the contract as a whole and in general are to be limited to minor components of the overall contract.

2. The contract amount upon which the requirements set forth in paragraph (1) of Section VI is computed includes the cost of material and manufactured products which are to be purchased or produced by the contractor under the contract provisions.

3. The contractor shall furnish (a) a competent superintendent or supervisor who is employed by the firm, has full authority to direct performance of the work in accordance with the contract requirements, and is in charge of all construction operations (regardless of who performs the work) and (b) such other of its own organizational resources (supervision, management, and engineering services) as the contracting officer determines is necessary to assure the performance of the contract.

4. No portion of the contract shall be sublet, assigned or otherwise disposed of except with the written consent of the contracting officer, or authorized representative, and such consent when given shall not be construed to relieve the contractor of any responsibility for the fulfillment of the contract. Written consent will be given only after the contracting agency has assured that each subcontract is evidenced in writing and that it contains all pertinent provisions and requirements of the prime contract.

5. The 30% self-performance requirement of paragraph (1) is not applicable to design-build contracts; however, contracting agencies may establish their own self-performance requirements.

VII. SAFETY: ACCIDENT PREVENTION

This provision is applicable to all Federal-aid construction contracts and to all related subcontracts.

1. In the performance of this contract the contractor shall comply with all applicable Federal, State, and local laws governing safety, health, and sanitation (23 CFR 635). The contractor shall provide all safeguards, safety devices and protective equipment and take any other needed actions as it determines, or as the contracting officer may determine, to be reasonably necessary to protect the life and health of employees on the job and the safety of the public and to

protect property in connection with the performance of the work covered by the contract.

2. It is a condition of this contract, and shall be made a condition of each subcontract, which the contractor enters into pursuant to this contract, that the contractor and any subcontractor shall not permit any employee, in performance of the contract, to work in surroundings or under conditions which are unsanitary, hazardous or dangerous to his/her health or safety, as determined under construction safety and health standards (29 CFR 1926) promulgated by the Secretary of Labor, in accordance with Section 107 of the Contract Work Hours and Safety Standards Act (40 U.S.C. 3704).

3. Pursuant to 29 CFR 1926.3, it is a condition of this contract that the Secretary of Labor or authorized representative thereof, shall have right of entry to any site of contract performance to inspect or investigate the matter of compliance with the construction safety and health standards and to carry out the duties of the Secretary under Section 107 of the Contract Work Hours and Safety Standards Act (40 U.S.C.3704).

VIII. FALSE STATEMENTS CONCERNING HIGHWAY PROJECTS

This provision is applicable to all Federal-aid construction contracts and to all related subcontracts.

In order to assure high quality and durable construction in conformity with approved plans and specifications and a high degree of reliability on statements and representations made by engineers, contractors, suppliers, and workers on Federal-aid highway projects, it is essential that all persons concerned with the project perform their functions as carefully, thoroughly, and honestly as possible. Willful falsification, distortion, or misrepresentation with respect to any facts related to the project is a violation of Federal law. To prevent any misunderstanding regarding the seriousness of these and similar acts, Form FHWA-1022 shall be posted on each Federal-aid highway project (23 CFR 635) in one or more places where it is readily available to all persons concerned with the project:

18 U.S.C. 1020 reads as follows:

"Whoever, being an officer, agent, or employee of the United States, or of any State or Territory, or whoever, whether a person, association, firm, or corporation, knowingly makes any false statement, false representation, or false report as to the character, quality, quantity, or cost of the material used or to be used, or the quantity or quality of the work performed or to be performed, or the cost thereof in connection with the submission of plans, maps, specifications, contracts, or costs of construction on any highway or related project submitted for approval to the Secretary of Transportation; or

Whoever knowingly makes any false statement, false representation, false report or false claim with respect to the character, quality, quantity, or cost of any work performed or to be performed, or materials furnished or to be furnished, in connection with the construction of any highway or related project approved by the Secretary of Transportation; or

Whoever knowingly makes any false statement or false representation as to material fact in any statement, certificate, or report submitted pursuant to provisions of the Federal-aid Roads Act approved July 1, 1916, (39 Stat. 355), as amended and supplemented;

Shall be fined under this title or imprisoned not more than 5 years or both."

IX. IMPLEMENTATION OF CLEAN AIR ACT AND FEDERAL WATER POLLUTION CONTROL ACT

This provision is applicable to all Federal-aid construction contracts and to all related subcontracts.

By submission of this bid/proposal or the execution of this contract, or subcontract, as appropriate, the bidder, proposer, Federal-aid construction contractor, or subcontractor, as appropriate, will be deemed to have stipulated as follows:

1. That any person who is or will be utilized in the performance of this contract is not prohibited from receiving an award due to a violation of Section 508 of the Clean Water Act or Section 306 of the Clean Air Act.
2. That the contractor agrees to include or cause to be included the requirements of paragraph (1) of this Section X in every subcontract, and further agrees to take such action as the contracting agency may direct as a means of enforcing such requirements.

X. CERTIFICATION REGARDING DEBARMENT, SUSPENSION, INELIGIBILITY AND VOLUNTARY EXCLUSION

This provision is applicable to all Federal-aid construction contracts, design-build contracts, subcontracts, lower-tier subcontracts, purchase orders, lease agreements, consultant contracts or any other covered transaction requiring FHWA approval or that is estimated to cost $25,000 or more – as defined in 2 CFR Parts 180 and 1200.

1**. Instructions for Certification – First Tier Participants:**

a. By signing and submitting this proposal, the prospective first tier participant is providing the certification set out below.

b. The inability of a person to provide the certification set out below will not necessarily result in denial of participation in this covered transaction. The prospective first tier participant shall submit an explanation of why it cannot provide the certification set out below. The certification or explanation will be considered in connection with the department or agency's determination whether to enter into this transaction. However, failure of the prospective first tier participant to furnish a certification or an explanation shall disqualify such a person from participation in this transaction.

c. The certification in this clause is a material representation of fact upon which reliance was placed when the contracting agency determined to enter into this transaction. If it is later determined that the prospective participant knowingly rendered an erroneous certification, in addition to other remedies available to the Federal Government, the contracting agency may terminate this transaction for cause of default.

d. The prospective first tier participant shall provide immediate written notice to the contracting agency to whom this proposal is submitted if any time the prospective first tier participant learns that its certification was erroneous when submitted or has become erroneous by reason of changed circumstances.

e. The terms "covered transaction," "debarred," "suspended," "ineligible," "participant," "person," "principal," and "voluntarily excluded," as used in this clause, are defined in 2 CFR Parts 180 and 1200. "First Tier Covered Transactions" refers to any covered transaction between a grantee or subgrantee of Federal funds and a participant (such as the prime or general contract). "Lower Tier Covered Transactions" refers to any covered transaction under a First Tier Covered Transaction (such as subcontracts). "First Tier Participant" refers to the participant who has entered into a covered

transaction with a grantee or subgrantee of Federal funds (such as the prime or general contractor). "Lower Tier Participant" refers any participant who has entered into a covered transaction with a First Tier Participant or other Lower Tier Participants (such as subcontractors and suppliers).

f. The prospective first tier participant agrees by submitting this proposal that, should the proposed covered transaction be entered into, it shall not knowingly enter into any lower tier covered transaction with a person who is debarred, suspended, declared ineligible, or voluntarily excluded from participation in this covered transaction, unless authorized by the department or agency entering into this transaction.

g. The prospective first tier participant further agrees by submitting this proposal that it will include the clause titled "Certification Regarding Debarment, Suspension, Ineligibility and Voluntary Exclusion-Lower Tier Covered Transactions," provided by the department or contracting agency, entering into this covered transaction, without modification, in all lower tier covered transactions and in all solicitations for lower tier covered transactions exceeding the $25,000 threshold.

h. A participant in a covered transaction may rely upon a certification of a prospective participant in a lower tier covered transaction that is not debarred, suspended, ineligible, or voluntarily excluded from the covered transaction, unless it knows that the certification is erroneous. A participant is responsible for ensuring that its principals are not suspended, debarred, or otherwise ineligible to participate in covered transactions. To verify the eligibility of its principals, as well as the eligibility of any lower tier prospective participants, each participant may, but is not required to, check the Excluded Parties List System website (https://www.epls.gov/), which is compiled by the General Services Administration.

i. Nothing contained in the foregoing shall be construed to require the establishment of a system of records in order to render in good faith the certification required by this clause. The knowledge and information of the prospective participant is not required to exceed that which is normally possessed by a prudent person in the ordinary course of business dealings.

j. Except for transactions authorized under paragraph (f) of these instructions, if a participant in a covered transaction knowingly enters into a lower tier covered transaction with a person who is suspended, debarred, ineligible, or voluntarily excluded from participation in this transaction, in addition to other remedies available to the Federal Government, the department or agency may terminate this transaction for cause or default.

* * * * *

2. Certification Regarding Debarment, Suspension, Ineligibility and Voluntary Exclusion – First Tier Participants:

a. The prospective first tier participant certifies to the best of its knowledge and belief, that it and its principals:

(1) Are not presently debarred, suspended, proposed for debarment, declared ineligible, or voluntarily excluded from participating in covered transactions by any Federal department or agency;

(2) Have not within a three-year period preceding this proposal been convicted of or had a civil judgment rendered against them for commission of fraud or a criminal offense in connection with obtaining, attempting to obtain, or performing a public (Federal, State or local) transaction or contract under a public transaction; violation of Federal or State antitrust statutes or commission of embezzlement, theft, forgery, bribery, falsification or destruction of records, making false statements, or receiving stolen property;

(3) Are not presently indicted for or otherwise criminally or civilly charged by a governmental entity (Federal, State or local) with commission of any of the offenses enumerated in paragraph (a)(2) of this certification; and

(4) Have not within a three-year period preceding this application/proposal had one or more public transactions (Federal, State or local) terminated for cause or default.

b. Where the prospective participant is unable to certify to any of the statements in this certification, such prospective participant shall attach an explanation to this proposal.

2. **Instructions for Certification - Lower Tier Participants:**

(Applicable to all subcontracts, purchase orders and other lower tier transactions requiring prior FHWA approval or estimated to cost $25,000 or more - 2 CFR Parts 180 and 1200)

a. By signing and submitting this proposal, the prospective lower tier is providing the certification set out below.

b. The certification in this clause is a material representation of fact upon which reliance was placed when this transaction was entered into. If it is later determined that the prospective lower tier participant knowingly rendered an erroneous certification, in addition to other remedies available to the Federal Government, the department, or agency with which this transaction originated may pursue available remedies, including suspension and/or debarment.

c. The prospective lower tier participant shall provide immediate written notice to the person to which this proposal is submitted if at any time the prospective lower tier participant learns that its certification was erroneous by reason of changed circumstances.

d. The terms "covered transaction," "debarred," "suspended," "ineligible," "participant," "person," "principal," and "voluntarily excluded," as used in this clause, are defined in 2 CFR Parts 180 and 1200. You may contact the person to which this proposal is submitted for assistance in obtaining a copy of those regulations. "First Tier Covered Transactions" refers to any covered transaction between a grantee or subgrantee of Federal funds and a participant (such as the prime or general contract). "Lower Tier Covered Transactions" refers to any covered transaction under a First Tier Covered Transaction (such as subcontracts). "First Tier Participant" refers to the participant who has entered into a covered transaction with a grantee or subgrantee of Federal funds (such as the prime or general contractor). "Lower Tier Participant" refers any participant who has entered into a covered transaction with a First Tier Participant or other Lower Tier Participants (such as subcontractors and suppliers).

e. The prospective lower tier participant agrees by submitting this proposal that, should the proposed covered transaction be entered into, it shall not knowingly enter into any lower tier covered transaction with a person who is debarred, suspended, declared ineligible, or voluntarily excluded from participation in this covered transaction, unless authorized by the department or agency with which this transaction originated.

f. The prospective lower tier participant further agrees by submitting this proposal that it will include this clause titled "Certification Regarding Debarment, Suspension, Ineligibility and Voluntary Exclusion-Lower Tier Covered Transaction," without modification, in all lower tier covered transactions and in all solicitations for lower tier covered transactions exceeding the $25,000 threshold.

g. A participant in a covered transaction may rely upon a certification of a prospective participant in a lower tier covered transaction that is not debarred, suspended, ineligible, or voluntarily excluded from the covered transaction, unless it knows that the certification is erroneous. A participant is responsible for ensuring that its principals are not suspended, debarred, or otherwise ineligible to participate in covered transactions. To verify the eligibility of its principals, as well as the eligibility of any lower tier prospective participants, each participant may, but is not required to, check the Excluded Parties List System website (https://www.epls.gov/), which is compiled by the General Services Administration.

h. Nothing contained in the foregoing shall be construed to require establishment of a system of records in order to render in good faith the certification required by this clause. The knowledge and information of participant is not required to exceed that which is normally possessed by a prudent person in the ordinary course of business dealings.

i. Except for transactions authorized under paragraph e of these instructions, if a participant in a covered transaction knowingly enters into a lower tier covered transaction with a person who is suspended, debarred, ineligible, or voluntarily excluded from participation in this transaction, in addition to other remedies available to the Federal Government, the department or agency with which this transaction originated may pursue available remedies, including suspension and/or debarment.

* * * * *

Certification Regarding Debarment, Suspension, Ineligibility and Voluntary Exclusion--Lower Tier Participants:

1. The prospective lower tier participant certifies, by submission of this proposal, that neither it nor its principals is presently debarred, suspended, proposed for debarment, declared ineligible, or voluntarily excluded from participating in covered transactions by any Federal department or agency.

2. Where the prospective lower tier participant is unable to certify to any of the statements in this certification, such prospective participant shall attach an explanation to this proposal.

* * * * *

XI. CERTIFICATION REGARDING USE OF CONTRACT FUNDS FOR LOBBYING

This provision is applicable to all Federal-aid construction contracts and to all related subcontracts which exceed $100,000 (49 CFR 20).

1. The prospective participant certifies, by signing and submitting this bid or proposal, to the best of his or her knowledge and belief, that:

a. No Federal appropriated funds have been paid or will be paid, by or on behalf of the undersigned, to any person for influencing or attempting to influence an officer or employee of any Federal agency, a Member of Congress, an officer or employee of Congress, or an employee of a Member of Congress in connection with the awarding of any Federal contract, the making of any Federal grant, the making of any Federal loan, the entering into of any cooperative agreement, and the extension, continuation, renewal, amendment, or modification of any Federal contract, grant, loan, or cooperative agreement.

b. If any funds other than Federal appropriated funds have been paid or will be paid to any person for influencing or attempting to influence an officer or employee of any Federal agency, a Member of Congress, an officer or employee of Congress, or an employee of a Member of Congress in connection with this Federal contract, grant, loan, or cooperative agreement, the undersigned shall complete and submit Standard Form-LLL, "Disclosure Form to Report Lobbying," in accordance with its instructions.

2. This certification is a material representation of fact upon which reliance was placed when this transaction was made or entered into. Submission of this certification is a prerequisite for making or entering into this transaction imposed by 31 U.S.C. 1352. Any person who fails to file the required certification shall be subject to a civil penalty of not less than $10,000 and not more than $100,000 for each such failure.

3. The prospective participant also agrees by submitting its bid or proposal that the participant shall require that the language of this certification be included in all lower tier subcontracts, which exceed $100,000 and that all such recipients shall certify and disclose accordingly.

Female and Minority Goals

To comply with Section II, "Nondiscrimination," of "Required Contract Provisions Federal-Aid Construction Contracts," the following are goals for female and minority utilization goals for Federal-aid construction contracts and subcontracts that exceed $10,000:

The nationwide goal for female utilization is 6.9 percent
.

BID BOND

KNOW ALL MEN BY THESE PRESENTS,

That _____ as Principal, and

_____ as Surety, are held and firmly bound unto The City of San Diego hereinafter called "OWNER," in the sum of **10% OF THE TOTAL BID AMOUNT** for the payment of which sum, well and truly to be made, we bind ourselves, our heirs, executors, administrators, successors, and assigns, jointly and severally, firmly by these presents.

WHEREAS, said Principal has submitted a Bid to said OWNER to perform the WORK required under the bidding schedule(s) of the OWNER's Contract Documents entitled

_____

NOW THEREFORE, if said Principal is awarded a contract by said OWNER and, within the time and in the manner required in the "Invitation to Bids" enters into a written Agreement on the form of agreement bound with said Contract Documents, furnishes the required certificates of insurance, and furnishes the required Performance Bond and Payment Bond, then this obligation shall be null and void, otherwise it shall remain in full force and effect. In the event suit is brought upon this bond by said OWNER and OWNER prevails, said Surety shall pay all costs incurred by said OWNER in such suit, including a reasonable attorney's fee to be fixed by the court.

SIGNED AND SEALED, this _____ day of _____, 20_____

_____ (SEAL) _____ (SEAL)
(Principal) (Surety)

By: _____ By: _____
(Signature) (Signature)

(SEAL AND NOTARIAL ACKNOWLEDGEMENT OF SURETY)

EQUAL BENEFITS ORDINANCE CERTIFICATION OF COMPLIANCE

For additional information, contact:
CITY OF SAN DIEGO
EQUAL BENEFITS PROGRAM
202 C Street, MS 9A, San Diego, CA 92101
Phone (619) 533-3948 Fax (619) 533-3220

COMPANY INFORMATION	
Company Name:	Contact Name:
Company Address:	Contact Phone:
	Contact Email:

CONTRACT INFORMATION	
Contract Title:	Start Date:
Contract Number (if no number, state location):	End Date:

SUMMARY OF EQUAL BENEFITS ORDINANCE REQUIREMENTS

The Equal Benefits Ordinance [EBO] requires the City to enter into contracts only with contractors who certify they will provide and maintain equal benefits as defined in SDMC §22.4302 for the duration of the contract. To comply:

- Contractor shall offer equal benefits to employees with spouses and employees with domestic partners.
  - Benefits include health, dental, vision insurance; pension/401(k) plans; bereavement, family, parental leave; discounts, child care; travel/relocation expenses; employee assistance programs; credit union membership; or any other benefit.
  - Any benefit not offer an employee with a spouse, is not required to be offered to an employee with a domestic partner.
- Contractor shall post notice of firm's equal benefits policy in the workplace and notify employees at time of hire and during open enrollment periods.
- Contractor shall allow City access to records, when requested, to confirm compliance with EBO requirements.
- Contractor shall submit *EBO Certification of Compliance*, signed under penalty of perjury, prior to award of contract.

NOTE: This summary is provided for convenience. Full text of the EBO and Rules Implementing the EBO are available at *www.sandiego.gov/administration*.

CONTRACTOR EQUAL BENEFITS ORDINANCE CERTIFICATION

Please indicate your firm's compliance status with the EBO. The City may request supporting documentation.

☐ I affirm **compliance** with the EBO because my firm *(contractor must select one reason):*

- ☐ Provides equal benefits to spouses and domestic partners.
- ☐ Provides no benefits to spouses or domestic partners.
- ☐ Has no employees.
- ☐ Has collective bargaining agreement(s) in place prior to January 1, 2011, that has not been renewed or expired.

☐ I request the City's approval to pay affected employees a cash equivalent in lieu of equal benefits and verify my firm made a reasonable effort but is not able to provide equal benefits upon contract award. I agree to notify employees of the availability of a cash equivalent for benefits available to spouses but not domestic partners and to continue to make every reasonable effort to extend all available benefits to domestic partners.

It is unlawful for any contractor to knowingly submit any false information to the City regarding equal benefits or cash equivalent associated with the execution, award, amendment, or administration of any contract. [San Diego Municipal Code §22.4307(a)]

Under penalty of perjury under laws of the State of California, I certify the above information is true and correct. I further certify that my firm understands the requirements of the Equal Benefits Ordinance and will provide and maintain equal benefits for the duration of the contract or pay a cash equivalent if authorized by the City.

Name/Title of Signatory	Signature	Date

FOR OFFICIAL CITY USE ONLY			
Receipt Date:	EBO Analyst:	□ Approved	□ Not Approved – Reason:

(Rev 02/15/2011)

City of San Diego

ADDENDUM "B"

FOR

TED WILLIAMS PARKWAY PEDESTRIAN OVERCROSSING AT SHOAL CREEK DRIVE

BID NO.:	**K-13-4885-DBB-3**
SAP NO. (WBS/IO/CC):	**S-00941**
CLIENT DEPARTMENT:	**2112**
COUNCIL DISTRICT:	**5**
PROJECT TYPE:	**IC**
FEDERAL AID PROJECT NO.:	**HPLU 5004(168)**

The engineering Specifications and Special Provisions contained herein have been prepared by or under the direction of the following Registered Engineer:

REGISTERED PROFESSIONAL ENGINEER
ABI PALASEYED
No C-54473
CML
STATE OF CALIFORNIA

A. Palaseyed

Registered Engineer

Seal:

A. CHANGES TO THE BID SUBMITTAL DUE DATE AND TIME

The bid opening date for this project has been extended to **2:00PM** on **AUGUST 28th, 2012.**

Proposals will be received at the Public Works Contracting Group, 1200 Third Avenue, Suite 200, San Diego, California.

B. CHANGES TO CONTRACT DOCUMENTS

The following changes to the Contract Documents are hereby made effective as though originally issued with the bid package. Bidders are reminded that all previous requirements to this solicitation remain in full force and effect.

C. BIDDER's QUESTIONS

Q1. Concern has been raised with the current rebar cage design for the CIDH piles. The 24" piles (Section D-D. page 17) have spiral @ 3 ½" O.C. The 66" pile cages have hoops @ 5" O.C., which will leave 4" clear between the bars. In both cases, the design does not meet the current criteria for Caltrans design (See Attachment). With these piles being poured in 'Wet-hole' conditions, Gamma-Gamma testing will need to be performed. These NON-Spec. cages design 'may' lead to anomalies during testing due to restricted concrete flow. They need to be redesigned before construction of project begins.

A1. Please see revised plan sheets 17-D and 20-D of this addendum which show modified bar spacing and sizing.

Q2. Reference Plan Sheet 5. Is the contractor to conclude that the existence of the plan is evidence that the designers have performed the necessary geotechnical investigations and slope stability analyses to determine that the 1:1 slope depicted on the drawing is stable and in conformance with OSHA regulations?

A2. The 1:1 slope depicted on plan sheet 5 is in conformance with the project geotechnical report and is valid for construction.

Q3. Reference Item 41 and Plan Sheet 7. Please indicate on which plan sheet these sign are shown and what they are.

A3. Item 41 has been REMOVED from the bid and REPLACED as referenced in the Revised Bid Proposal Attached to this Addendum. Also see below under Volume 2 Changes.

Q4. Please clarify Schedule J pavement Class F – per note 1 on page 2 – is this 7" of new concrete overlaid with 4" of new AC class F?

A4. For bidding purposes, please use the section: 7" of new Portland cement concrete (PCC) with 1/4" asphalt concrete (AC) wearing surface.

Q5. Page 99 – normal working hours – Does 8:30 am to 3:30 pm working hours apply to lane closures for Ted Williams Parkway and/or flagging on Shoal Creek Drive? If the Contractor does not require traffic control to be in place, or will affect the sidewalk access as specified in the contract documents, work hours are assumed to be 7:00 am to 5:00 pm M-F.

A5. Please bid as provided on the plan, specifications and as directed in the City of San Diego's Standard Specifications for Public Works Construction (The Whitebook).

Q6. Page 102/49 Whitebook – Inspection. Who is responsible for soils compaction/materials testing (and cost of) for both on-site and off-site work?

A6. The City of San Diego will provide the soil and concrete testing.

D. VOLUME 1

1. To the BIDDING DOCUMENTS, NONCOLLUSION AFFIDAVIT, page 8, **DELETE** in its entirety and **SUBSTITUTE** with page 4 of 17 of this Addendum.

2. To the BIDDING DOCUMENTS, PROPOSAL (BID), pages 17 through 21, **DELETE** in their entirety and **SUBSTITUTE** with page 5 of 17 through 10 of 17 of this Addendum.

E. PLANS

1. To DRAWING SHEET NUMBER **35490-1-D, 35490-2-D, 35490-17-D, 35490-20-D**, and **35490-T1-D through 35490-T3-D**, **DELETE** in their entirety and **REPLACE** with page 11 of 17 through 17 of 17 of this Addendum.

Tony Heinrichs, Director
Public Works Department

Dated: August 15, 2012
San Diego, California

TH/bd / ca / ls

NON-COLLUSION AFFIDAVIT TO BE EXECUTED BY BIDDER AND SUBMITTED WITH BID UNDER 23 UNITED STATES CODE 112 AND PUBLIC CONTRACT CODE 7106

State of California)
) ss.
County of _____)

_____, being first duly sworn, deposes and says that he or she is _____ of the party making the foregoing bid that the bid is not made in the interest of, or on behalf of, any undisclosed person, partnership, company, association, organization, or corporation; that the bid is genuine and not collusive or sham; that the bidder has not directly or indirectly induced or solicited any other bidder to put in a false or sham bid, and has not directly or indirectly colluded, conspired, connived, or agreed with any bidder or anyone else to put in a sham bid, or that anyone shall refrain from bidding; that the bidder has not in any manner, directly or indirectly, sought by agreement, communication, or conference with anyone to fix the bid price of the bidder or any other bidder, or to fix any overhead, profit, or cost element of the bid price, or of that of any other bidder, or to secure any advantage against the public body awarding the contract of anyone interested in the proposed contract; that all statements contained in the bid are true; and further, that the bidder has not, directly or indirectly, submitted his or her bid price or any breakdown thereof, or the contents thereof, or divulged information or data relative thereto, or paid, and will not pay, any fee to any corporation, partnership, company association, organization, bid depository, or to any member or agent thereof to effectuate a collusive or sham bid.

Signed: _____

Title: _____

Subscribed and sworn to before me this _____day of_____,20__

_____

Notary Public (SEAL)

PROPOSAL (BID)

The Bidder agrees to the construction of **TED WILLIAMS PARKWAY PEDESTRIAN OVERCROSSING AT SHOAL CREEK DRIVE,** for the City of San Diego, in accordance with these contract documents for the prices listed below. The Bidder guarantees the Contract Price for a period of 120 days (90 days for Federally Funded Contracts or Contracts valued at $500,000 or less) from the date of Bid opening to Award of the Contract. The duration of the Contract Price guarantee shall be extended by the number of days required for the City to obtain all items necessary to fulfill all conditions precedent e.g., bond and insurance.

Item	Quantity	Unit	Caltrans Standard Specification No.	Caltrans Special Provisions No.	City of San Diego Standard Specification No.	NAICS	Description	Unit Price	Extension
1(F)	156	CY	19-3.08	13-1.18	NA	NA	Structure Excavation (Bridge)	$	$
2(F)	117	CY	19-3.08	13-1.18	NA	NA	Structure Backfill (Bridge)	$	$
3(F)	882	CY	19-3.08	13-1.18	NA	NA	Structure Excavation (Retaining Wall)	$	$
4(F)	679	CY	19-3.08	13-1.18	NA	NA	Structure Backfill (Retaining Wall)	$	$
5	66	LF	49-6.02	13-1.22	NA	NA	24" Diameter Cast-In-Drilled-Hole Concrete Piling	$	$
6	139	LF	49-6.02	13-1.22	NA	NA	66" Diameter Cast-In-Drilled-Hole Concrete Piling	$	$
7(F)	33	CY	51-1.23	13-1.47	NA	NA	Structural Concrete, Bridge Footing	$	$
8(F)	330	CY	51-1.23	13-1.47	NA	NA	Structural Concrete, Bridge	$	$
9(F)	306	CY	51-1.23	13-1.47	NA	NA	Structural Concrete, Retaining Wall	$	$
10(F)	23	CY	73-1.08	13-1.32	NA	NA	Minor Concrete (Ramp Paving)	$	$

Item	Quantity	Unit	Caltrans Standard Specification No.	Caltrans Special Provisions No.	City of San Diego Standard Specification No.	NAICS	Description	Unit Price	Extension
11(F)	116500	LB	52-1.11	5-1.13	NA	NA	Bar Reinforcing Steel (Bridge)	$	$
12(F)	43300	LB	52-1.11	5-1.13	NA	NA	Bar Reinforcing Steel (Retaining Wall)	$	$
13	1	LS	50-1.11	49-6.02	NA	NA	Prestressing Cast-In-Place Concre		$
14	2	EA	51.1.23	13-1.24	NA	NA	Furnish Precast Girders	$	$
15	2	EA	51.1.23	13-1.24	NA	NA	Erect Precast Girders	$	$
16	18	LF	51.1.23	13-1.24	NA	NA	Joint Seal (Type B - MR 1 1/4")	$	$
17	9	LF	51.1.23	13-1.24	NA	NA	Joint Seal (Type B - MR 2")	$	$
18	9	LF	51.1.23	13-1.24	NA	NA	Joint Seal (Type B - MR 2 1/2")	$	$
19(F)	2900	SF	NA	13-1.45	NA	NA	Architectural Finish (Stone Facad	$	$
20	18600	SF	NA	13-1.28	NA	NA	Prepare and Stain Concrete	$	$
21	16820	SF	NA	13-1.46	NA	NA	Anti-Graffiti Protective Coating	$	$
22(F)	1283	LF	83-2.04	13-1.41	NA	NA	Concrete Barrier	$	$
23(F)	830	LF	83-1.04	13-1.38	NA	NA	Metal Bridge Railing (Type A)	$	$
24(F)	174	LF	83-1.04	13-1.38	NA	NA	Metal Bridge Railing (Type B)	$	$
25(F)	137	LF	83-1.04	13-1.38	NA	NA	Metal Bridge Railing (Type C)	$	$
26(F)	137	LF	83-1.04	13-1.38	NA	NA	Metal Bridge Railing (Type D)	$	$
27	140	LF	83-1.04	13-1.40	NA	NA	Cable Railing	$	$
28(F)	266	LB	75-1.07	13-1.36	NA	NA	Bridge Deck Drainage System	$	$
29	1	LS	NA	13-1.47	NA	NA	Bronze Plaques		$

Item	Quantity	Unit	Caltrans Standard Specification No.	Caltrans Special Provisions No.	City of San Diego Standard Specification No.	NAICS	Description	Unit Price	Extension
30	1	LS	NA	13-1.28	NA	NA	Architectural Referee Sample		$
31	102	LF	NA	13-1.50	NA	NA	Fence Wall	$	$
32	1	LS	NA	21-1.03	NA	NA	Maintain Existing Planted Area		$
33	1	LS	NA	21-1.01	NA	NA	Highway Planting		$
34	1	LS	NA	21-1.17	308-8	561730	Plant Establishment Work (90 Day Period)		$
35	1	LS	NA	NA	308-8	561730	Maintain Existing Irrigation Facilities		$
36	1	LS	NA	21-1.02	308-8	561730	Irrigation System		$
37	1	LS	86-1	NA	NA	NA	Electrical Work		$
38	1	LS	86-8.01	NA	NA	NA	Signals, Lighting and Electrical Systems		$
39	1	LS	NA	NA	7-10.2.7	237310	Traffic Control		$
40	1	LS	84-2.06	13-1.42	NA	NA	Traffic Stripes and Pavement Markings		$
41	31	CY	NA	NA	200-3	237310	Cement Treated Permeable Base	$	$
42	296	CY	NA	NA	300-2.9	237310	Grading	$	$
43	1	LS	NA	NA	800-2.15	238390	Clearing and Grubbing		$
44	900	SF	NA	NA	302-2	237310	Schedule ‘J’ Pavement – Class ‘F’	$	$
45	2	EA	NA	NA	303-5.10.02	237310	Minor Concrete, Curb Ramp - Type A	$	$

Item	Quantity	Unit	Caltrans Standard Specification No.	Caltrans Special Provisions No.	City of San Diego Standard Specification No.	NAICS	Description	Unit Price	Extension
46	1	EA	NA	NA	303-5.10.02	237310	Minor Concrete, Curb Ramp - Type A-1	$	$
47	2965	SF	NA	NA	303-5.09	237310	Minor Concrete, Sidewalk (4")	$	$
48	280	LF	NA	NA	303-5.9	237310	Minor Concrete, Curb And Gutter (Type G)	$	$
49	163	LF	NA	NA	303-1.11	237110	Minor Concrete, Brow Ditch	$	$
50	4	EA	NA	NA	303-1.11	237110	Brooks Box Catch Basin	$	$
51	1	EA	NA	NA	306-1.6	237110	Minor Concrete, Cleanout	$	$
52	2	EA	NA	NA	303-1.11	237110	Minor Concrete, Curb Outlet	$	$
53	65	LF	NA	13-1.29	NA	NA	6" PVC Pipe (Horizontal Drains)	$	$
54	20	LF	NA	13-1.31	NA	NA	16" Steel Sleeve	$	$
55	1	LS	NA	NA	801-8.4	541330	Prepare Water Pollution Control Program		$
56	1	LS	NA	NA	800-2.15	561730	Erosion Control		$
57	215	LF	NA	NA	306-1.6	237110	Waterline Relocation	$	$
58	205	LF	NA	NA	306-5.3	237110	Abandon Pipeline	$	$
59	10	LF	NA	13-1.34	NA	NA	Trench Drain	$	$
60	1	AL	NA	NA	700-1.2.1.3	237110	City Forces Work		$26,905
61	1	LS	NA	NA	9-3.4.1	NA	Mobilization		$
							ESTIMATED TOTAL BASE BID	**$**	

TOTAL BID PRICE FOR BID (Items 1 through 61 inclusive) amount written in words:

_____

The Bid shall contain an acknowledgment of receipt of all addenda, the numbers of which shall be filled in on the Bid form. If an addendum or addenda has been issued by the City and not noted as being received by the Bidder, this proposal shall be rejected as being **non-responsive**. The following addenda have been received and are acknowledged in this bid: _____

The names of all persons interested in the foregoing proposal as principals are as follows:

_____

_____

_____

_____

IMPORTANT NOTICE: If Bidder or other interested person is a corporation, state secretary, treasurer, and manager thereof; if a co-partnership, state true name of firm, also names of all individual co-partners composing firm; if Bidder or other interested person is an individual, state first and last names in full.

Bidder: _____

Title: _____

Business Address: _____

Place of Business: _____

Place of Residence: _____

Signature: _____

NOTES:

A. The City shall determine the low Bid based on the Base Bid alone.
B. Prices and notations shall be in ink or typewritten. All corrections (which have been initiated by the Bidder using erasures, strike out, line out, or "white-out") shall be typed or written in with ink adjacent thereto, and shall be initialed in ink by the person signing the bid proposal.
C. Failure to initial all corrections made in the bidding documents shall cause the Bid to be rejected as **non-responsive** and ineligible for further consideration.
D. Blank spaces must be filled in, using figures. Bidder's failure to submit a price for any Bid item that requires the Bidder to submit a price shall render the Bid **non-responsive** and shall be cause for its rejection.
E. Unit prices shall be entered for all unit price items. Unit prices shall not exceed two (2) decimal places. If the Unit prices entered exceed two (2) decimal places, the City will only use the first two digits after the decimal points without rounding up or down.
F. All extensions of the unit prices bid will be subject to verification by the City. In the case of inconsistency or conflict between the product of the Quantity x Unit Price and the Extension, the product shall govern.
G. In the case of inconsistency or conflict, between the sums of the Extensions with the estimated total Bid, the sum of the Extensions shall govern.
H. Bids shall not contain any recapitulation of the Work. Conditional Bids will be rejected as being **non-responsive**. Alternative proposals will not be considered unless called for.
I. Pay Items designated as F are subject to the Caltrans Standard Specifications. See 9-1.015, "Final Pay Items."

"FEDERAL-AID ID: HPLU 5004 (168)

TED WILLIAMS PARKWAY PEDESTRIAN OVERCROSSING AT SHOAL CREEK DRIVE

OWNER/APPLICANT

CITY OF SAN DIEGO
1222 FIRST AVENUE
SAN DIEGO, CA 92101

REFERENCE DRAWINGS

28580-D
23958-D
24084-D
23788-D
28432-D
28311-D

SITE ADDRESS

INTERSECTION OF TED WILLIAMS PARKWAY AND SHOAL CREEK DRIVE

TOPOGRAPHY SOURCE

BASED UPON A FIELD SURVEY PERFORMED BY CITY OF SAN DIEGO SURVEYING DIVISION ON AUGUST 30, 2007. WORK ORDER NO. 117880.

BENCHMARK

NEBP RANCHO CARMEL DRIVE AND SHOAL CREEK DRIVE, ELEV. 589.611 MSL. BASED ON NGVD 29 FEET AS SHOWN IN THE CITY OF SAN DIEGO BENCH BOOK.

BASIS OF BEARINGS/COORDINATES

THE BASIS OF BEARINGS FOR THIS PROJECT WAS DERIVED FROM A PREVIOUS STATIC GPS SURVEY USING GPS 501 AND GPS 502 AS SHOWN ON R. OF S. 14492 I.E. N43°42'32"W, 1712.693 NAD 83 FEET, ZONE 6 (EPOCH 91.35).

TOTAL DISTURBED AREA

TOTAL SITE DISTURBED AREA = 0.4 ACRES

ASSESSOR'S PARCEL NUMBERS

313-570-070 313-570-002
313-642-017 313-761-023
313-750-001

GRADING & GEOTECHNICAL SPECIFICATIONS

1. ALL GRADING SHALL BE DONE UNDER OBSERVATION AND TESTING BY A QUALIFIED CIVIL ENGINEER OR GEOTECHNICAL ENGINEER AND, IF REQUIRED, BOTH A QUALIFIED CIVIL ENGINEER OR GEOTECHNICAL ENGINEER AND AN ENGINEERING GEOLOGIST. ALL GRADING MUST BE PERFORMED IN ACCORDANCE WITH APPLICABLE CITY ORDINANCE AND THE RECOMMENDATIONS AND SPECIFICATIONS SET FORTH IN THE SOILS REPORT OR GEOLOGICAL/GEOTECHNICAL INVESTIGATION ENTITLED "FOUNDATION REPORT" FOR TED WILLIAMS PEDESTRIAN OVERCROSSING PREPARED BY GEOCON INCORPORATED, DATED: 04/07/2010.

2. ALL STRUCTURAL BACKFILL MATERIAL SHALL BE COMPACTED TO A MINIMUM OF 95% OF THE MAXIMUM DRY DENSITY AS DETERMINED BY THE MOST RECENT VERSION OF A.S.T.M. D-1557 OR AN APPROVED ALTERNATIVE STANDARD. ALL OTHER BACKFILL SHALL BE COMPACTED TO A MINIMUM 90% OF THE MAXIMUM DRY DENSITY.

3. AT THE COMPLETION OF THE GRADING OPERATIONS FOR THE EARTHWORK SHOWN ON THIS PLAN, AN AS-GRADED SOILS REPORT, OR IF REQUIRED, AN AS-GRADED SOILS AND GEOLOGICAL REPORT WILL BE PREPARED IN ACCORDANCE WITH THE MOST RECENT EDITION OF THE CITY OF SAN DIEGO TECHNICAL GUIDELINES FOR GEOTECHNICAL REPORTS. THE FINAL "AS-GRADED" GEOTECHNICAL REPORT WILL BE SUBMITTED TO THE FIELD ENGINEERING SECTION OF PUBLIC WORKS AND A SECOND COPY TO THE GEOLOGY SECTION OF DEVELOPMENT SERVICES WITHIN 15 DAYS OF THE COMPLETION OF GRADING. WHERE GEOLOGIC INSPECTION IS INDICATED IN THE PERMIT OR PROJECT PLANS, REPORTS OR SPECIFICATIONS, THE FINAL REPORT MUST ALSO BE REVIEWED AND SIGNED BY A CALIFORNIA CERTIFIED ENGINEERING GEOLOGIST.

4. IF THE GEOTECHNICAL CONSULTANT OF RECORD IS CHANGED FOR THE PROJECT, THE WORK SHALL BE STOPPED UNTIL THE REPLACEMENT HAS AGREED IN WRITING TO ACCEPT THE RESPONSIBILITY WITHIN THE AREA OF THEIR TECHNICAL COMPETENCE FOR APPROVAL UPON COMPLETION OF THE WORK. IT SHALL BE THE DUTY OF THE PERMITTEE TO NOTIFY THE CITY ENGINEER AND THE GEOLOGY SECTION OF DEVELOPMENT SERVICES IN WRITING OF SUCH CHANGE PRIOR TO THE RECOMMENCEMENT OF GRADING.

5. THESE GRADING PLANS HAVE BEEN REVIEWED BY THE UNDERSIGNED AND FOUND TO BE IN CONFORMANCE WITH THE RECOMMENDATIONS AND SPECIFICATIONS CONTAINED IN THE REFERENCED GEOTECHNICAL REPORT(S) PREPARED FOR THIS PROJECT.

SIGNATURE	NUMBER	EXPIRATION DATE	R.C.E. OR G.E.	DATE
	2775	06/30/2012	GE	April 5, 2011

GEOCON, INC. (858) 558-6900

CONSTRUCTION CHANGE TABLE

CHANGE	DATE	AFFECTED OR ADDED SHEET NUMBERS

NOTE: CONTRACTOR SHALL VERIFY ALL CONTROLLING FIELD DIMENSIONS BEFORE ORDERING OR FABRICATING ANY MATERIAL.

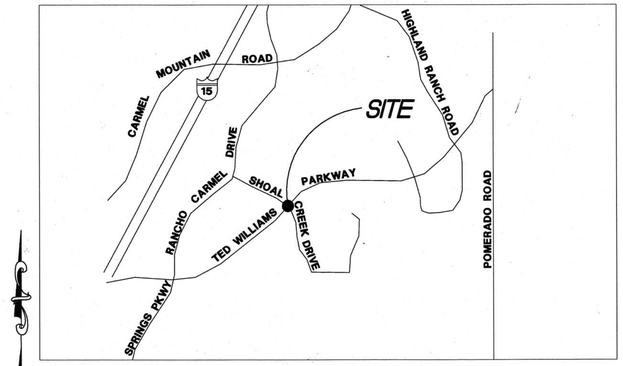

VICINITY MAP

NO SCALE

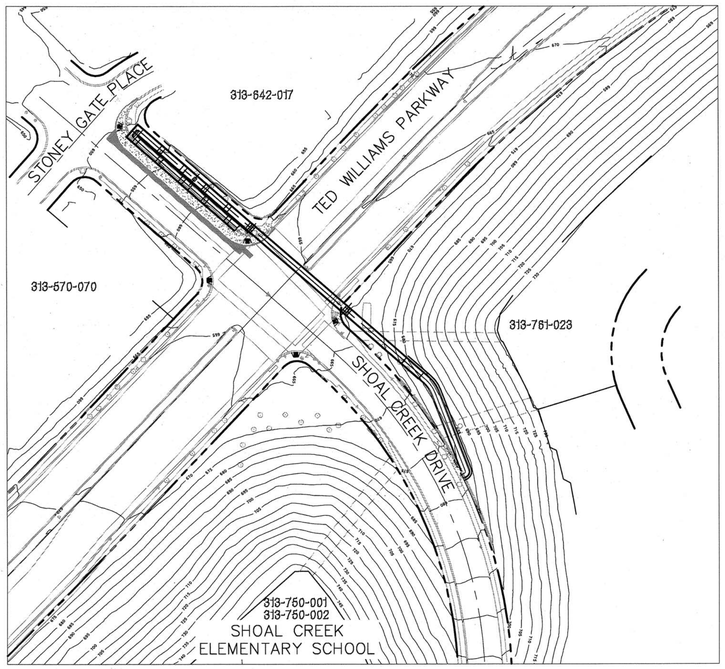

KEY MAP

1"=100'

DECLARATION OF RESPONSIBLE CHARGE

I HEREBY DECLARE THAT I AM THE ENGINEER OF WORK FOR THIS PROJECT, THAT I HAVE EXERCISED RESPONSIBLE CHARGE OVER THE DESIGN OF THE PROJECT AS DEFINED IN SECTION 6703 OF THE BUSINESS AND PROFESSIONS CODE, AND THAT THE DESIGN IS CONSISTENT WITH CURRENT STANDARDS. I UNDERSTAND THAT THE CHECK OF PROJECT DRAWINGS AND SPECIFICATIONS BY THE CITY OF SAN DIEGO IS CONFINED TO A REVIEW ONLY AND DOES NOT RELIEVE ME, AS ENGINEER OF WORK, OF MY RESPONSIBILITIES FOR PROJECT DESIGN.

JON M. COLLINS R.C.E. C62090 DATE 4/1/11

IMPORTANT NOTICE
SECTION 4216/4217 OF THE GOVERNMENT CODE REQUIRES A DIG ALERT IDENTIFICATION NUMBER BE ISSUED BEFORE A "PERMIT TO EXCAVATE" WILL BE VALID. FOR YOUR DIG ALERT I.D. NUMBER CALL UNDERGROUND SERVICE ALERT 1-800-227-2600 OR DIAL 811 TWO WORKING DAYS BEFORE YOU DIG.

STANDARD DRAWINGS

1. THE CITY OF SAN DIEGO STANDARD DRAWINGS, INCLUDING ALL REGIONAL STANDARD DRAWINGS, DOCUMENT NO. AEC1231063, FILED 12/31/2006.
2. STATE OF CALIFORNIA, DEPARTMENT OF TRANSPORTATION, THE 2006 U.S. CUSTOMARY UNIT STANDARD PLANS, CITY DOCUMENT NO. AEC0925061, FILED 09/25/2006.

STANDARD SPECIFICATIONS

1. STANDARD SPECIFICATION FOR PUBLIC WORKS CONSTRUCTION, 2009 EDITION (GREENBOOK), CITY DOCUMENT NO. PITS0504091, FILED 05/04/2009.
2. CITY OF SAN DIEGO SUPPLEMENTS (TO BE USED IN CONJUNCTION WITH GREENBOOK), CITY DOCUMENT NO. PITS050492, FILED 05/04/2009.
3. STATE OF CALIFORNIA, DEPARTMENT OF TRANSPORTATION, MANUAL OF UNIFORM TRAFFIC CONTROL DEVICES (MUTCD 2006) INCLUDING THE CALIFORNIA SUPPLEMENT AND THE CITY OF SAN DIEGO SIGN BOOK, 2006 EDITION, CITY DOCUMENT NO. AEC1231064, FILED 12/31/2006.
4. STATE OF CALIFORNIA, DEPARTMENT OF TRANSPORTATION, THE 2006 U.S. CUSTOMARY SPECIFICATIONS, CITY DOCUMENT NO. AEC0925062, FILED 09/25/2006.

LEGEND

PROPOSED IMPROVEMENTS

IMPROVEMENT	STANDARD DWGS.	SYMBOL
A.C. PAVEMENT (CLASS F)	SDG-113	
PARCEL BOUNDARY		
PROPOSED GRADING LIMITS OF WORK		
ELEVATION		675.50 FS
TYPE 'G' CURB AND GUTTER	G-2, SDG-100	
SAWCUT LINE		
CURB RAMP (SEE PLAN FOR TYPE)	SDG-132	
R/W		
PROPOSED WATER	SDW-100, WP-01, WP-02, WT-01	

EXISTING IMPROVEMENTS

ITEM	SYMBOL
ELECTRICAL LINE AND VAULT	E
FIRE HYDRANT	FH
SEWER LINE AND MANHOLE	S
STORM DRAIN LINE, INLET, CLEANOUT, AND MANHOLE	SD
TRAFFIC SIGNAL	SIG
SPOT ELEVATION	x 612.3
TELEPHONE LINE AND VAULT	T
WATER LINE, BACK FLOW PREVENTER AND IRRIGATION METER	BF
CHAIN LINK FENCE	X X X X
CURB AND GUTTER	
RETAINING WALL	
SIGNS	

SHEET INDEX

TITLE SHEET	SHEET 1
GENERAL NOTES AND TYPICAL SECTIONS	SHEET 2
DEMOLITION PLAN	SHEET 3
SHOAL CREEK PLAN AND PROFILE	SHEET 4
ROUGH GRADING PLAN	SHEET 5
GRADING PLAN	SHEET 6
TRAFFIC SIGNING AND STRIPING PLAN	SHEET 7
TRAFFIC SIGNAL INSTALLATION	SHEET 8
WATER POLLUTION CONTROL PLAN	SHEET 9
BRIDGE PLANS	SHEET 10-38
ELECTRICAL PLANS	SHEET 39-41
LANDSCAPE PLANS	SHEET 42-46
TRAFFIC CONTROL PLAN - LOCATION 1	SHEET T1
TRAFFIC CONTROL PLAN - LOCATION 2	SHEET T2
TRAFFIC CONTROL PLAN - SHOAL CREEK DR	SHEET T3

REGISTERED PROFESSIONAL ENGINEER
TAMMIE C. MORENO
No. 74417
Exp. 09/30/11
CIVIL
STATE OF CALIFORNIA

Kimley-Horn and Associates, Inc.
401 B Street · Suite 600 · San Diego, Ca. · 92101
Tel: (619) 234-9411 · Fax: (619) 234-9433
DATE: 4-4-11
PREPARED BY: TAMMIE C. MORENO R.C.E. 74417
REGISTRATION EXPIRES: 09/30/11

CONSTRUCTION SITE PRIORITY LOW
CITY CONTRACT
SPECIFICATION NO. 4885 CITY CONTRACT, CIP NO. S-00941

PLANS FOR THE CONSTRUCTION OF:

TED WILLIAMS PARKWAY PEDESTRIAN OVERCROSSING AT SHOAL CREEK DRIVE

TITLE SHEET

CITY OF SAN DIEGO, CALIFORNIA
ENGINEERING AND CAPITAL PROJECTS DEPARTMENT
SHEET 1 OF 46 SHEETS

A. Palaseyed 4/7/2011
FOR CITY ENGINEER DATE

DESCRIPTION	BY	APPROVED	DATE	FILMED
ORIGINAL	SWE			
B	SWE	A. Palaseyed	8/16/11	

CONTRACTOR _____ DATE STARTED _____
INSPECTOR _____ DATE COMPLETED _____

W.O. NO. S-00941
A. PALASEYED SECTION HEAD
M. KOLL PROJECT MANAGER
NAD 83
292-1743
LAMBERT COORDINATES
35490-1-D

B ADDENDUM B

Mar 31, 2011 - 12:18pm K:\SND_TPTO\095279013\Design\sheets\279013-01.dwg tammie.moreno

GROUND WATER DISCHARGE NOTES

1. ALL GROUND WATER EXTRACTIONS AND SIMILAR WASTE DISCHARGES TO SURFACE WATERS NOT TRIBUTARY TO THE SAN DIEGO BAY ARE PROHIBITED UNTIL IT CAN BE DEMONSTRATED THAT THE OWNER HAS APPLIED AND OBTAINED AUTHORIZATION FROM THE STATE OF CALIFORNIA VIA AN OFFICIAL "ENROLLMENT LETTER" FROM THE REGIONAL WATER QUALITY CONTROL BOARD IN ACCORDANCE WITH THE TERMS, PROVISIONS AND CONDITIONS OF STATE ORDER NO 2001-96 NPDES CAG919002.

2. THE ESTIMATED MAXIMUM DISCHARGE RATES MUST NOT EXCEED THE LIMITS SET IN THE OFFICIAL "ENROLLMENT LETTER" FROM THE REGIONAL BOARD UNLESS PRIOR NOTIFICATION AND SUBSEQUENT AUTHORIZATION HAS BEEN OBTAINED, AND DISCHARGE OPERATIONS MODIFIED TO ACCOMMODATE THE INCREASED RATES.

3. ALL GROUND WATER EXTRACTIONS AND SIMILAR WASTE DISCHARGES TO SURFACE WATERS TRIBUTARY TO THE SAN DIEGO BAY ARE PROHIBITED UNTIL IT CAN BE DEMONSTRATED THAT THE OWNER HAS APPLIED AND OBTAINED AUTHORIZATION FROM THE STATE OF CALIFORNIA VIA AN OFFICIAL "ENROLLMENT LETTER" FROM THE REGIONAL WATER QUALITY CONTROL BOARD IN ACCORDANCE WITH THE TERMS, PROVISIONS AND CONDITIONS OF STATE ORDER NO 2009-2009-DWQ. NPDES NO. CAG919001.

WATER NOTES

1. ALL CONNECTIONS TO EXISTING WATER MAINS ARE TO BE DONE BY THE CITY'S WATER DEPARTMENT FOR WHICH THE FOLLOWING FEES WILL BE CHARGED. IF THE WATER CONNECTIONS ARE NOT READY TO BE MADE AND THE FEES PAID BEFORE NOVEMBER 29, 2010, THE CITY RESERVES THE RIGHT TO ADJUST THE FEES ACCORDING TO THE FEE SCHEDULE IN EFFECT AT THE TIME THE CONNECTIONS ARE MADE. IT IS THE RESPONSIBILITY OF THE CONTRACTOR TO EXPOSE THE EXISTING MAIN AT THE CONNECTION POINT AND TO INSTALL THE NEW MAIN AT THE ALIGNMENT AND GRADE WHICH WILL PERMIT THE CITY TO MAKE A "STRAIGHT-IN" CONNECTION WITHOUT USING MORE THAN 10 LINEAL FEET OF PIPE.

	COST	TYPE OF CONNECTION	SHEET
ITEM NO.1:	$4,612	TEMPORARY 12" CUT AND PLUG AND REMOVE 90 DEGREE BEND	4
ITEM NO.2:	$6,691	RECONNECT WITH 12" STRAIGHT IN CONNECTION	4
ITEM NO.3:	$6,352	TEMPORARY 12" CUT AND PLUG (WITH PREMIUM TIME)	4
ITEM NO.4:	$9,250	RECONNECT WITH 12" STRAIGHT IN CONNECTION (WITH PREMIUM TIME)	4

2. ALL VALVES WILL BE FLANGED TO CROSSES AND TEES. ONLY GATE VALVES SHALL BE USED IN FIRE HYDRANT INSTALLATIONS.

3. ALL BURIED DUCTILE AND GRAY CAST IRON PIPE, FITTINGS, VALVES AND APPURTENANCES SHALL BE COATED WITH A DIELECTRIC COATING: A LIQUID EPOXY COATING SYSTEM PER AWWA C-210 AT 24 MILS MINIMUM DRY FILM THICKNESS (MDFT), OR A COLD APPLIED THREE PART SYSTEM PETROLEUM WAX TAPE PER AWWA C-217, OR A 100% POLYURETHANE COATING OF 24 MILS MDFT SUITABLE FOR BURIED USE.

4. ALL PROPOSED WATER AND SEWER FACILITY INSTALLATIONS SHALL BE CONSTRUCTED WITH MATERIALS CURRENTLY LISTED IN THE MOST CURRENT EDITION OF THE CITY OF SAN DIEGO WATER UTILITIES DEPARTMENT APPROVED MATERIALS LIST AS REFERENCED IN THE STANDARD SPECIFICATIONS FOR PUBLIC WORKS CONSTRUCTION. RECENT REVISIONS INCLUDE BUT IS NOT LIMITED TO THE REQUIREMENT FOR POLYMER CONCRETE WATER METER BOXES INSTEAD OF THE STANDARD PRECAST WATER METER BOXES.

STANDARD SIGNS

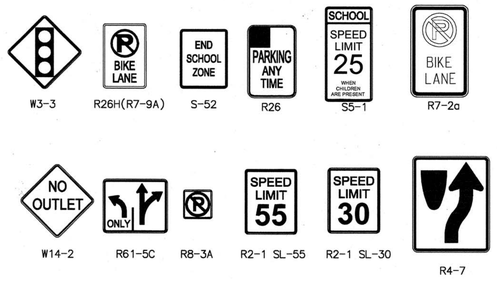

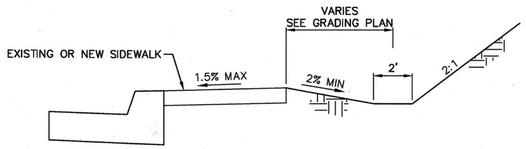

SWALE DETAIL
N.T.S.

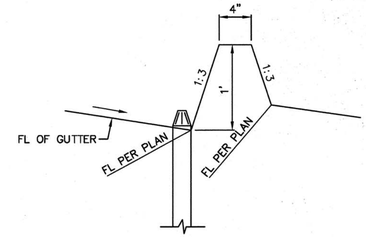

GUTTER RIDGE DETAIL
N.T.S.

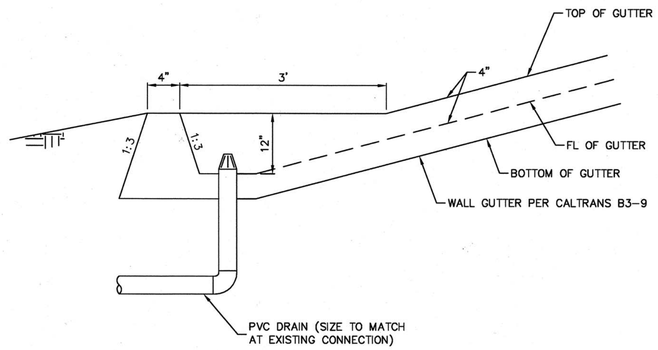

DRAIN OUTLET DETAIL AT ABUTMENT
N.T.S.

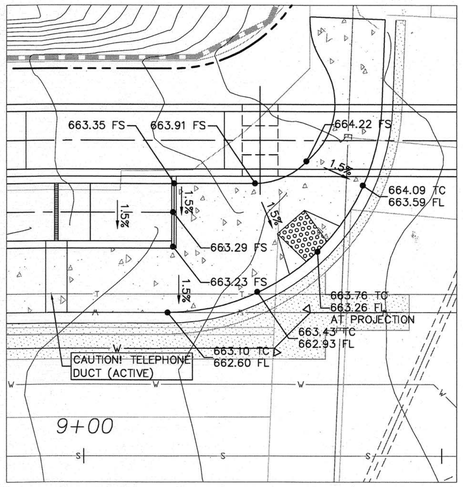

WEST RAMP GRADING
1"=10'

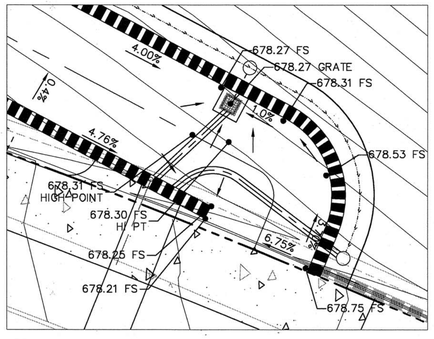

PRECISE GRADING
1"=5'

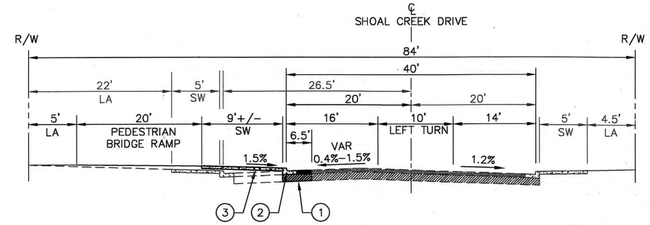

SHOAL CREEK DRIVE STA. 7+53.36 TO STA. 9+19.23
N.T.S.

CONSTRUCTION NOTES

1. SAWCUT AND MATCH EXISTING 7" CONCRETE WITH 1/4" AC (CLASS F) (B)
2. TYPE "G" CURB AND GUTTER COMBINED PER STD DWG G-2.
3. 9' CONCRETE SIDEWALK PER STD DWG G-7, SDG-100.

STREET DATA TABLE

STREET NAME	CLASSIFICATION	DESIGN SPEED (MPH)	FUTURE ADT (VEHICLES)	R/W (FT)
TED WILLIAMS PARKWAY	PRIMARY ARTERIAL (6 LANES)	55	38,000	126
SHOAL CREEK DRIVE	2 LANE COLLECTOR	35	6,000	84

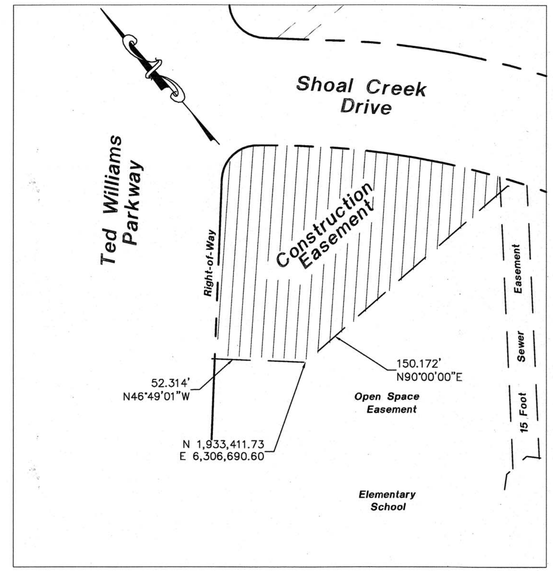

CONSTRUCTION EASEMENT
1"=40'

NOTE: CONTRACTOR SHALL VERIFY ALL CONTROLLING FIELD DIMENSIONS BEFORE ORDERING OR FABRICATING ANY MATERIAL.

IMPORTANT NOTICE
SECTION 4216/4217 OF THE GOVERNMENT CODE REQUIRES A DIG ALERT IDENTIFICATION NUMBER BE ISSUED BEFORE A "PERMIT TO EXCAVATE" WILL BE VALID. FOR YOUR DIG ALERT I.D. NUMBER CALL UNDERGROUND SERVICE ALERT 1-800-227-2600 OR DIAL 811 TWO WORKING DAYS BEFORE YOU DIG.

REGISTERED PROFESSIONAL ENGINEER TAMMIE C. MORENO No. 74417 Exp. 09/30/11 CIVIL STATE OF CALIFORNIA

Kimley-Horn and Associates, Inc.
401 B Street · Suite 600 · San Diego, Ca. · 92101
Tel: (619) 234-9411 · Fax: (619) 234-9433

PREPARED BY: TAMMIE C. MORENO R.C.E. 74417
REGISTRATION EXPIRES: 09/30/11 DATE: 4-4-11

CITY CONTRACT

SPECIFICATION NO. 4885 CITY CONTRACT, CIP NO. S-00941

PLANS FOR THE CONSTRUCTION OF:

TED WILLIAMS PARKWAY PEDESTRIAN OVERCROSSING AT SHOAL CREEK DRIVE

GENERAL NOTES AND TYPICAL SECTIONS

CITY OF SAN DIEGO, CALIFORNIA
ENGINEERING AND CAPITAL PROJECTS DEPARTMENT
SHEET 2 OF 45 SHEETS

W.O. NO. S-00941

D. Palaseyed 4/7/2011
FOR CITY ENGINEER DATE

A. PALASEYED SECTION HEAD

M. KOLL PROJECT MANAGER

NAD 83
292-1743
LAMBERT COORDINATES

35490-2-D

DESCRIPTION	BY	APPROVED	DATE	FILMED
ORIGINAL	SWE			
(B)	SWE			

CONTRACTOR _____ DATE STARTED _____
INSPECTOR _____ DATE COMPLETED _____

(B) ADDENDUM B

Mar 31, 2011 - 12:19pm K:\SND_TPTO\095278013\Design\sheets\278013-02.dwg tammie.moreno

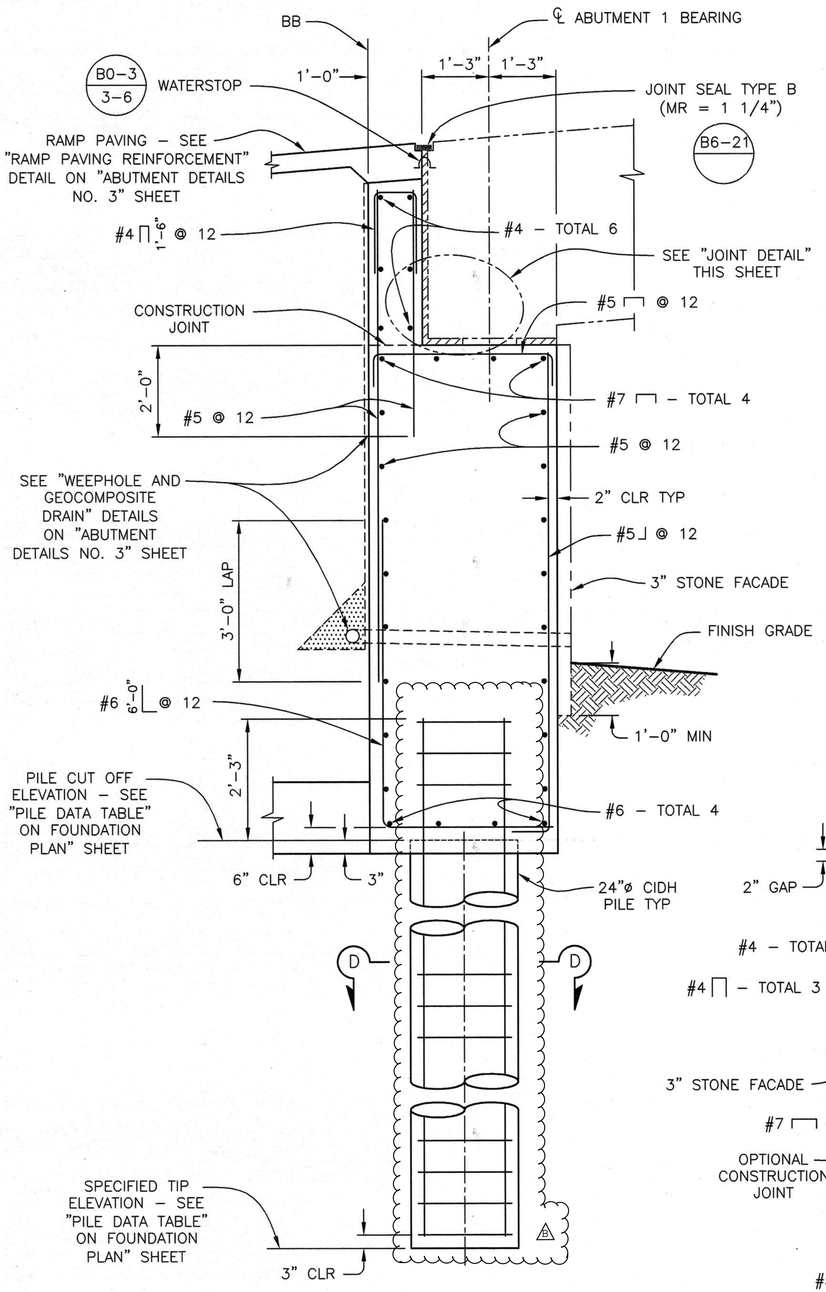

SECTION A-A

3/4" = 1'-0"

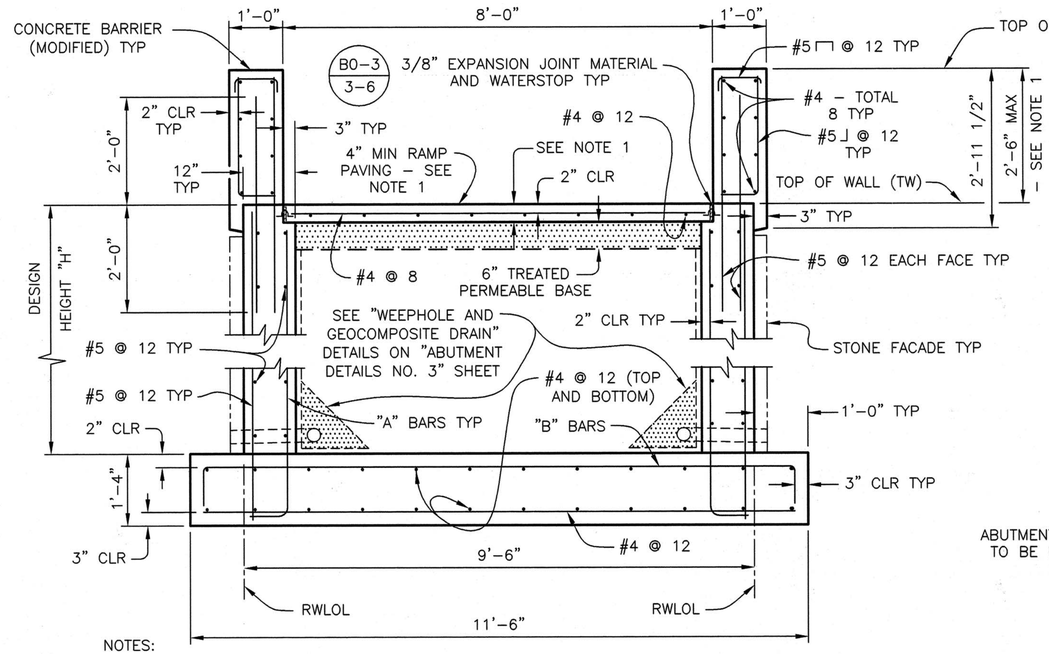

NOTES:

1. DIMENSION MAY VARY TO ACCOMMODATE LANDINGS. SEE "DECK CONTOURS" SHEET FOR RAMP ELEVATIONS.
2. RAILINGS NOT SHOWN FOR CLARITY.
3. WALKING SURFACE SHALL BE BROOM FINISHED AND SLIP RESISTANT.

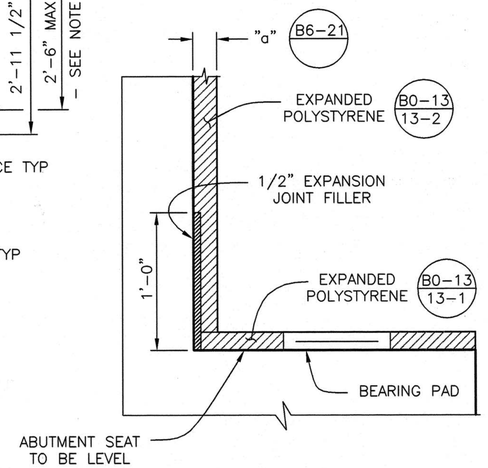

JOINT DETAIL

NO SCALE

SECTION B-B

3/4" = 1'-0"

DESIGN HEIGHT "H"	"A" BARS	"B" BARS
4'-0"	#5⌋ @ 12	#5⊓ @ 12
6'-0"	#5⌋ @ 12	#5⊓ @ 12
8'-0"	#5⌋ @ 12	#5⊓ @ 12
10'-0"	#6⌋ @ 16	#6⊓ @ 16
12'-0"	#6⌋ @ 8	#6⊓ @ 8

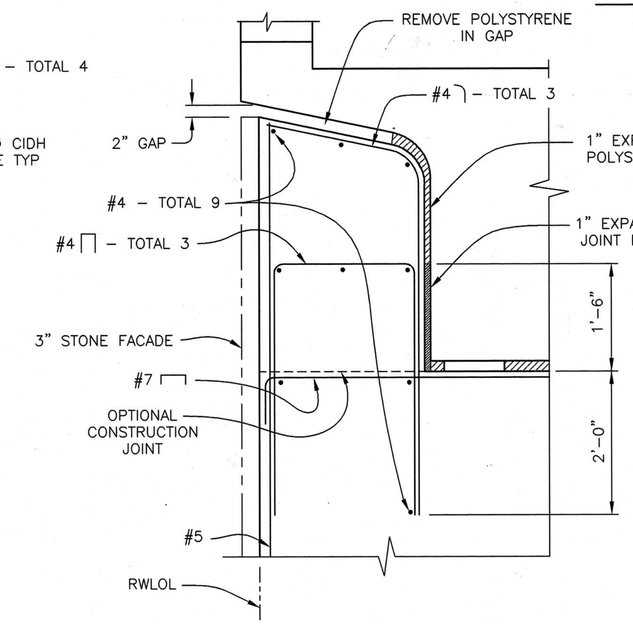

NOTE: NOT ALL ABUTMENT REINFORCEMENT SHOWN.

SECTION C-C

1" = 1'-0"

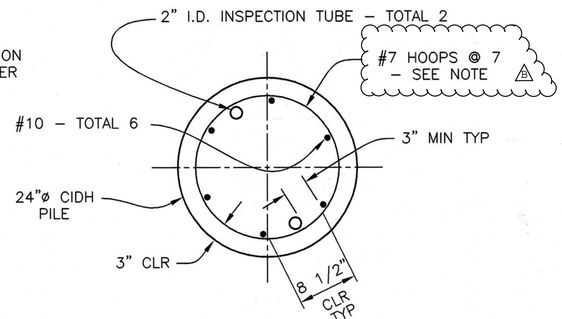

NOTE: HOOPS ARE ULTIMATE BUTT SPLICED CONTINUOUS. A

SECTION D-D

1" = 1'-0"

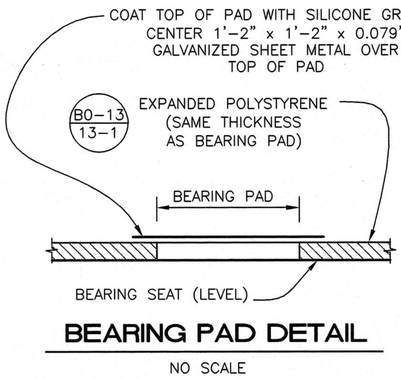

BEARING PAD DETAIL

NO SCALE

NOTE: CONTRACTOR SHALL VERIFY ALL CONTROLLING FIELD DIMENSIONS BEFORE ORDERING OR FABRICATING ANY MATERIAL.

NOTE: FOR LOCATIONS OF SECTIONS A-A, B-B, AND C-C, SEE "ABUTMENT 1 LAYOUT" AND "ABUTMENT 6 LAYOUT" SHEETS.

REGISTERED PROFESSIONAL ENGINEER — Craig Shannon — No. 66998 — Exp. 9-30-12 — CIVIL — STATE OF CALIFORNIA

SIMON WONG ENGINEERING
9968 Hibert Street, Second Floor
San Diego, CA 92131
(858) 566-3113
Job No. 500-773
Craig Shannon DATE: 8-15-12
PREPARED BY: CRAIG SHANNON R.C.E. NO. 66998
REGISTRATION EXPIRES: 09/30/12

CITY CONTRACT
SPECIFICATION NO. 4885 CITY CONTRACT, CIP NO. S-00941
PLANS FOR THE CONSTRUCTION OF:
TED WILLIAMS PARKWAY PEDESTRIAN OVERCROSSING AT SHOAL CREEK DRIVE
ABUTMENT DETAILS NO. 1

CITY OF SAN DIEGO, CALIFORNIA
ENGINEERING AND CAPITAL PROJECTS DEPARTMENT
SHEET 17 OF 46 SHEETS

W.O. NO. S-00941

A. Palaseyed FOR CITY ENGINEER 8/15/12 DATE

A. PALASEYED SECTION HEAD
M. KOLL PROJECT MANAGER

DESCRIPTION	BY	APPROVED	DATE	FILMED
ORIGINAL	SWE			
B	SWE	A. Palaseyed	8/15/12	

NAD 83
292-1743
LAMBERT COORDINATES

CONTRACTOR ____ DATE STARTED ____
INSPECTOR ____ DATE COMPLETED ____

35490-17-D

B ADDENDUM B

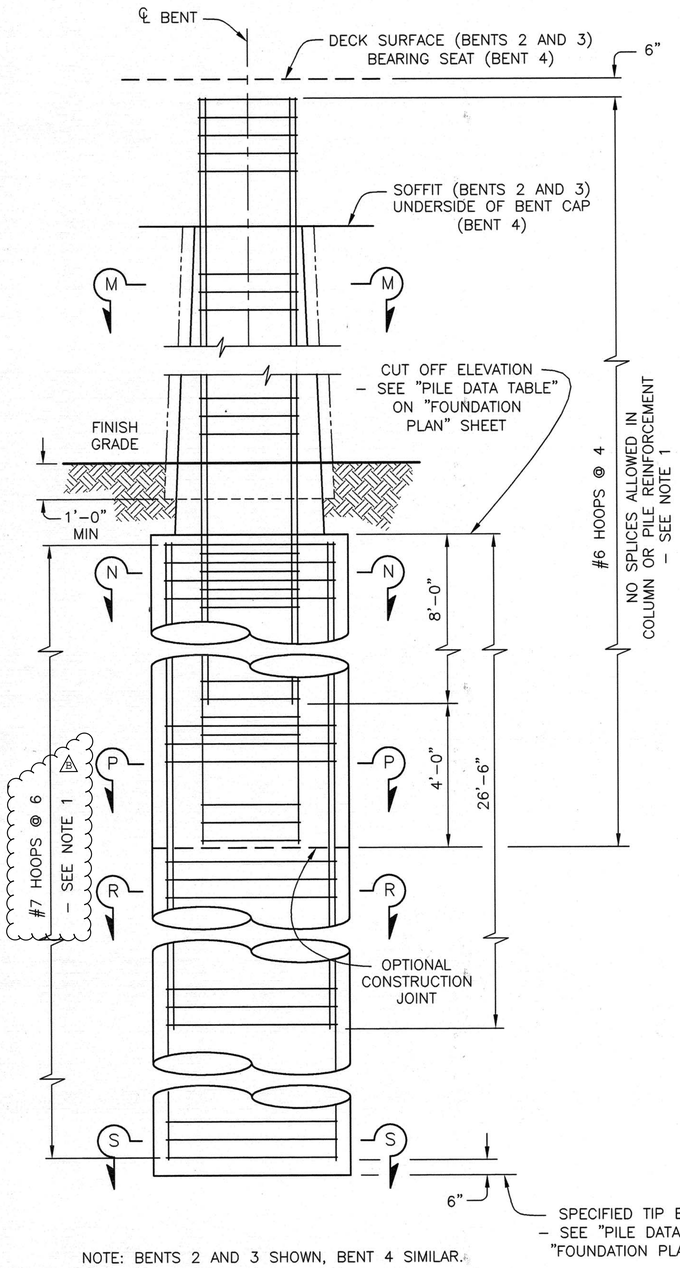

NOTE: BENTS 2 AND 3 SHOWN, BENT 4 SIMILAR.

TYPICAL COLUMN AND PILE REINFORCEMENT BENTS 2, 3, AND 4

1/2" = 1'–0"

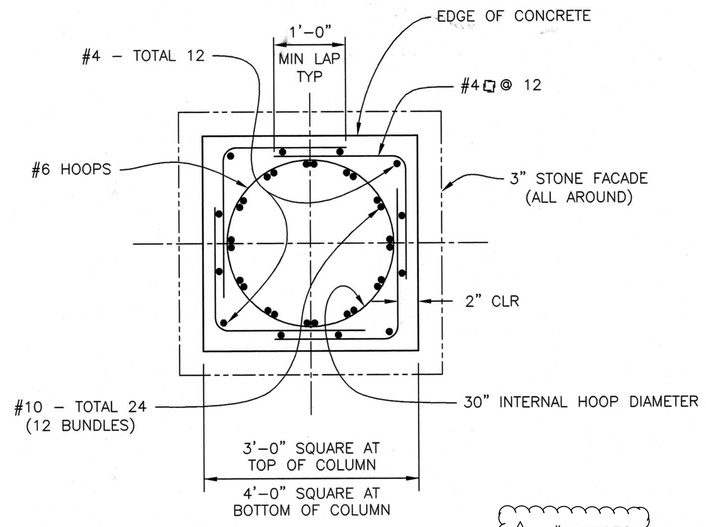

SECTION M-M

1" = 1'–0"

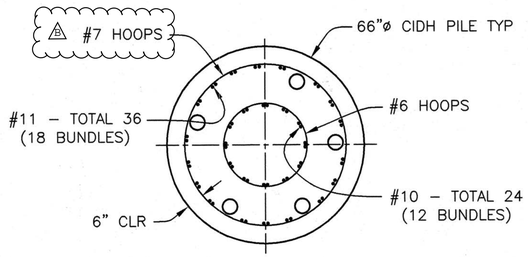

SECTION N-N

1/2" = 1'–0"

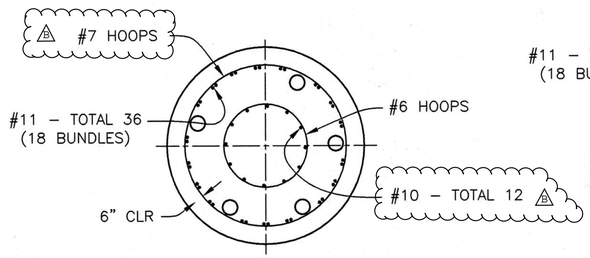

SECTION P-P

1/2" = 1'–0"

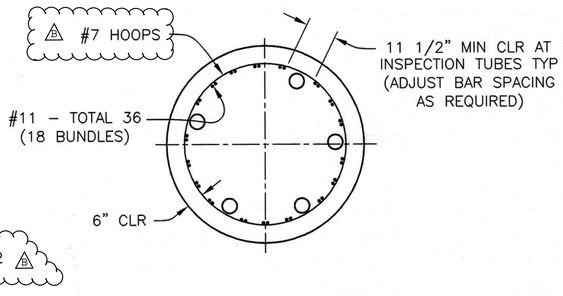

SECTION R-R

1/2" = 1'–0"

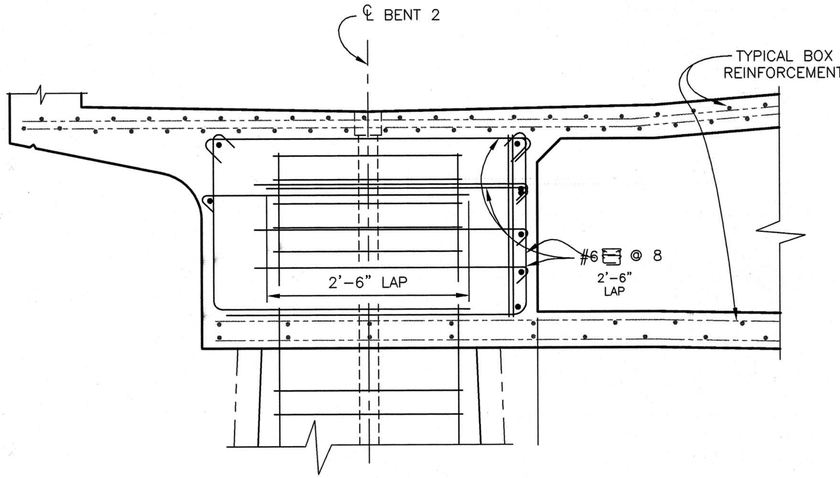

SECTION T-T

1" = 1'–0"

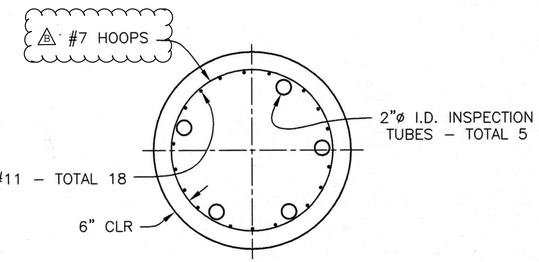

SECTION S-S

1/2" = 1'–0"

NOTE: CONTRACTOR SHALL VERIFY ALL CONTROLLING FIELD DIMENSIONS BEFORE ORDERING OR FABRICATING ANY MATERIAL.

NOTES:

1. HOOPS ARE ULTIMATE BUTT SPLICED CONTINUOUS.
2. FOR LOCATION OF SECTION T–T, SEE "BENT DETAILS NO. 2" SHEET.

CITY CONTRACT

SPECIFICATION NO. 4885 CITY CONTRACT, CIP NO. S–00941

PLANS FOR THE CONSTRUCTION OF:

TED WILLIAMS PARKWAY PEDESTRIAN OVERCROSSING AT SHOAL CREEK DRIVE

BENT DETAILS NO. 1

REGISTERED PROFESSIONAL ENGINEER — Craig Shannon — No. 66998 — Exp. 9-30-12 — CIVIL — STATE OF CALIFORNIA

CITY OF SAN DIEGO, CALIFORNIA
ENGINEERING AND CAPITAL PROJECTS DEPARTMENT
SHEET 20 OF 40 SHEETS

W.O. NO. S–00941

A. Palaseyed 8/15/12
FOR CITY ENGINEER — DATE

A. PALASEYED, SECTION HEAD

M. KOLL, PROJECT MANAGER

DESCRIPTION	BY	APPROVED	DATE	FILMED
ORIGINAL	SWE			
A	SWE	A. Palaseyed	8/15/12	

HAD 83
292–1743
LAMBERT COORDINATES

CONTRACTOR _____ DATE STARTED _____
INSPECTOR _____ DATE COMPLETED _____

35490-20-D

SIMON WONG ENGINEERING
9968 Hibert Street, Second Floor
San Diego, CA 92131
(858) 586–3113

Job No. 500–773

Craig Shannon DATE: 8-15-12
PREPARED BY: CRAIG SHANNON R.C.E. NO. 66998
REGISTRATION EXPIRES: 09/30/12

A ADDENDUM B

LOCATION 1:
CONSTRUCT FOOTING FOR PEDESTRIAN BRIDGE ON NORTH SIDE

LEGEND:

- PORTABLE SIGN
- CONE
- FLASHING ARROW BOARD
- WORK ZONE
- END CONSTRUCTION — G20-2
- TS — TRAFFIC SIGNAL
- SIDEWALK CLOSED — R9-9
- LANE CLOSED — C30 (CA)
- W4-2 (RT)
- SIDEWALK CLOSED CROSS HERE — R9-11A (RT)
- SIDEWALK CLOSED AHEAD CROSS HERE — R9-11 (RT)
- ROAD WORK AHEAD — W20-1
- BIKE LANE CLOSED — C30 (BIKE)
- SIDEWALK CLOSED AHEAD CROSS HERE — R9-11 (LT)
- RIGHT LANE CLOSED AHEAD — W20-5 (RT)
- BIKE LANE CLOSED AHEAD — W20-5 (BIKE)
- SIDEWALK CLOSED CROSS HERE — R9-11A (LT)

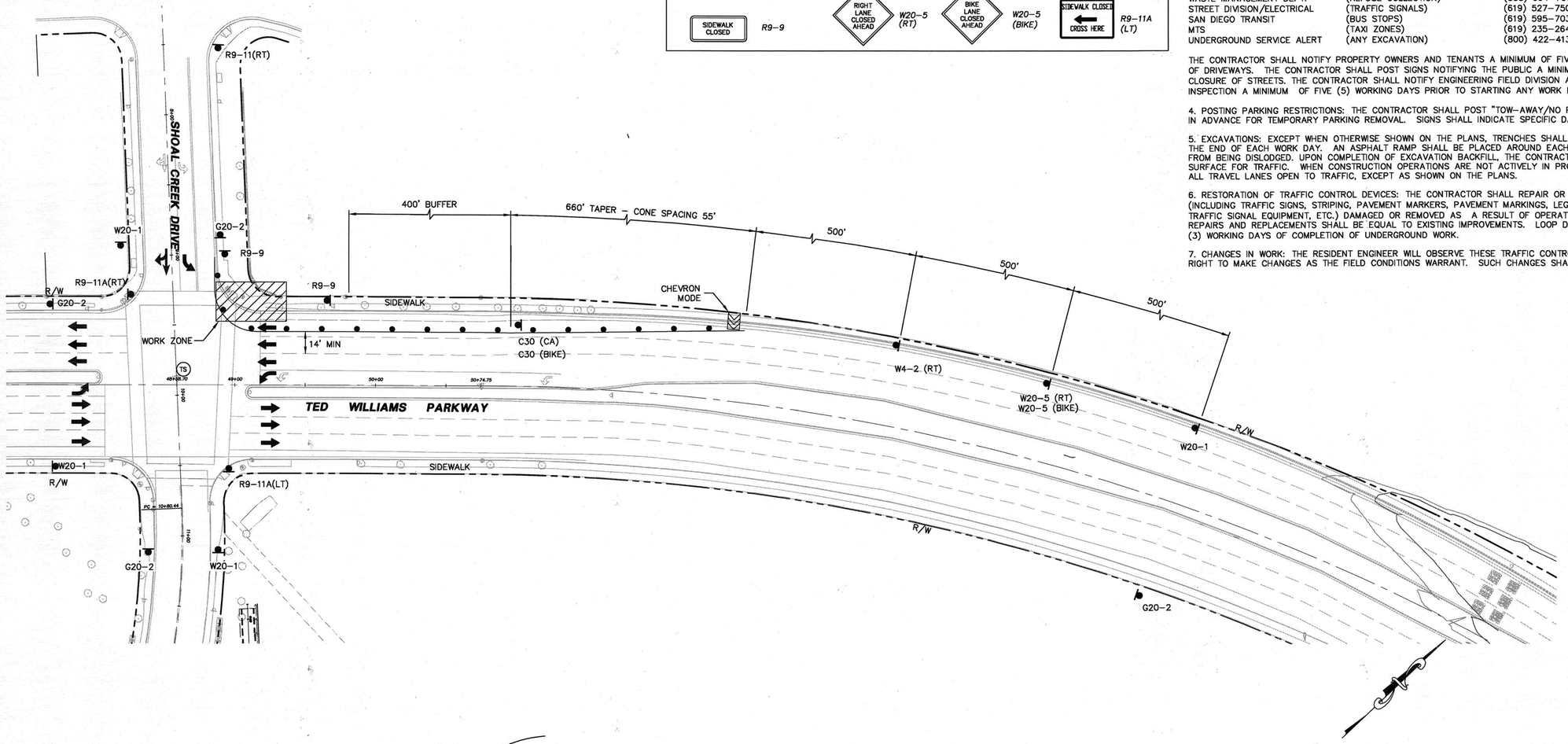

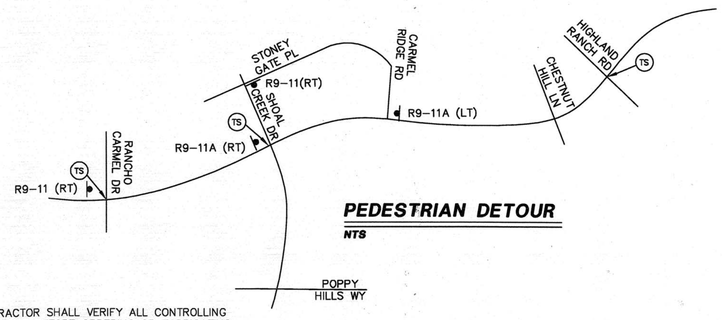

PEDESTRIAN DETOUR
NTS

NOTE: CONTRACTOR SHALL VERIFY ALL CONTROLLING FIELD DIMENSIONS BEFORE ORDERING OR FABRICATING ANY MATERIAL.

CONTRACTOR SHALL BE RESPONSIBLE FOR PROTECTING WORK ZONE WITH WITH 6' HIGH CHAIN LINK FENCE AROUND ALL CONSTRUCTION AND STAGING AREAS.

GRAPHIC SCALE
40' 0 20' 40' 80'

REGISTERED PROFESSIONAL ENGINEER — JON M. COLLINS — No. 62090 — Exp. 09/30/11 — CIVIL — STATE OF CALIFORNIA

CITY OF SAN DIEGO
TRAFFIC ENGINEER — 2/15/2012 DATE
FOR CITY ENGINEER
A

IMPORTANT NOTICE
SECTION 4216/4217 OF THE GOVERNMENT CODE REQUIRES A DIG ALERT IDENTIFICATION NUMBER BE ISSUED BEFORE A "PERMIT TO EXCAVATE" WILL BE VALID. FOR YOUR DIG ALERT I.D. NUMBER CALL UNDERGROUND SERVICE ALERT 1-800-227-2600 OR DIAL 811 TWO WORKING DAYS BEFORE YOU DIG.

Kimley-Horn and Associates, Inc.
401 B Street · Suite 600 · San Diego, Ca. · 92101
Tel: (619) 234-9411 · Fax: (619) 234-9433
PREPARED BY: JON M. COLLINS — DATE: 4/1/11
REGISTRATION EXPIRES: 09/30/11 — R.C.E. 62090

TRAFFIC CONTROL NOTES

STREETS WITH ADT OF 5,000 AND OVER

1. VALIDATION: THE TRAFFIC CONTROL PLAN IS NOT VALID UNTIL WORK DATES AND WORK HOURS ARE APPROVED. THE CONTRACTOR SHALL, PER SECTION 7-10.1.3 OF THE CONTRACT SPECIAL PROVISIONS, CALL THE ENGINEERING TRAFFIC CONTROL SECTION AT (858) 495-4741 TO OBTAIN A PERMIT. THE CONTRACTOR MUST CALL A MINIMUM OF TWO (2) WORKING DAYS PRIOR TO STARTING WORK, OR FIVE (5) WORKING DAYS WHEN THE WORK WILL AFFECT A TRAFFIC SIGNAL.

2. STANDARDS: THIS TRAFFIC CONTROL PLAN SHALL CONFORM TO THE MOST RECENT ADOPTED EDITION OF EACH OF THE FOLLOWING MANUALS:
a. CITY OF SAN DIEGO STANDARD DRAWINGS, APPENDIX "A";
b. CALIFORNIA MANUAL OF UNIFORM TRAFFIC CONTROL DEVICES FOR STREETS AND HIGHWAYS; AND
c. STANDARD SPECIFICATIONS FOR PUBLIC WORKS CONSTRUCTION ("GREENBOOK"), INCLUDING REGIONAL AND CITY OF SAN DIEGO SUPPLEMENT AMENDMENTS.

3. NOTIFICATIONS: THE CONTRACTOR SHALL NOTIFY THE FOLLOWING AFFECTED AGENCIES A MINIMUM OF FIVE (5) WORKING DAYS PRIOR TO ANY EXCAVATION, CONSTRUCTION, OR TRAFFIC CONTROL:

FIRE DEPARTMENT DISPATCH	(STREET OR ALLEY CLOSURE)	(858) 573-1300
POLICE DEPARTMENT TRAFFIC	(STREET OR ALLEY CLOSURE)	(858) 495-7800
WASTE MANAGEMENT DEPT.	(REFUSE COLLECTION)	(858) 694-7000
STREET DIVISION/ELECTRICAL	(TRAFFIC SIGNALS)	(619) 527-7500
SAN DIEGO TRANSIT	(BUS STOPS)	(619) 595-7038
MTS	(TAXI ZONES)	(619) 235-2643
UNDERGROUND SERVICE ALERT	(ANY EXCAVATION)	(800) 422-4133

THE CONTRACTOR SHALL NOTIFY PROPERTY OWNERS AND TENANTS A MINIMUM OF FIVE (5) WORKING DAYS PRIOR TO CLOSURE OF DRIVEWAYS. THE CONTRACTOR SHALL POST SIGNS NOTIFYING THE PUBLIC A MINIMUM OF FIVE (5) WORKING DAYS PRIOR TO CLOSURE OF STREETS. THE CONTRACTOR SHALL NOTIFY ENGINEERING FIELD DIVISION AT (858) 627-3200 AND ARRANGE FOR INSPECTION A MINIMUM OF FIVE (5) WORKING DAYS PRIOR TO STARTING ANY WORK INVOLVING NIGHTTIME OR WEEKEND HOURS.

4. POSTING PARKING RESTRICTIONS: THE CONTRACTOR SHALL POST "TOW-AWAY/NO PARKING SIGNS" TWENTY-FOUR (24) HOURS IN ADVANCE FOR TEMPORARY PARKING REMOVAL. SIGNS SHALL INDICATE SPECIFIC DAYS, DATES AND TIMES OF RESTRICTIONS.

5. EXCAVATIONS: EXCEPT WHEN OTHERWISE SHOWN ON THE PLANS, TRENCHES SHALL BE BACKFILLED OR TRENCH-PLATED AT THE END OF EACH WORK DAY. AN ASPHALT RAMP SHALL BE PLACED AROUND EACH TRENCH PLATE TO PREVENT THE PLATE FROM BEING DISLODGED. UPON COMPLETION OF EXCAVATION BACKFILL, THE CONTRACTOR SHALL PROVIDE A SATISFACTORY SURFACE FOR TRAFFIC. WHEN CONSTRUCTION OPERATIONS ARE NOT ACTIVELY IN PROGRESS, THE CONTRACTOR SHALL MAINTAIN ALL TRAVEL LANES OPEN TO TRAFFIC, EXCEPT AS SHOWN ON THE PLANS.

6. RESTORATION OF TRAFFIC CONTROL DEVICES: THE CONTRACTOR SHALL REPAIR OR REPLACE TRAFFIC CONTROL DEVICES (INCLUDING TRAFFIC SIGNS, STRIPING, PAVEMENT MARKERS, PAVEMENT MARKINGS, LEGENDS, CURB MARKINGS, LOOP DETECTORS, TRAFFIC SIGNAL EQUIPMENT, ETC.) DAMAGED OR REMOVED AS A RESULT OF OPERATIONS AND NOT DESIGNATED FOR REMOVAL. REPAIRS AND REPLACEMENTS SHALL BE EQUAL TO EXISTING IMPROVEMENTS. LOOP DETECTORS SHALL BE REPLACED WITHIN THREE (3) WORKING DAYS OF COMPLETION OF UNDERGROUND WORK.

7. CHANGES IN WORK: THE RESIDENT ENGINEER WILL OBSERVE THESE TRAFFIC CONTROL PLANS IN OPERATION AND RESERVES THE RIGHT TO MAKE CHANGES AS THE FIELD CONDITIONS WARRANT. SUCH CHANGES SHALL SUPERSEDE THESE PLANS.

CITY CONTRACT
SPECIFICATION NO. 4885 CITY CONTRACT, CIP NO. S-00941

PLANS FOR THE CONSTRUCTION OF:

TED WILLIAMS PARKWAY PEDESTRIAN OVERCROSSING AT SHOAL CREEK DRIVE

TRAFFIC CONTROL PLAN - LOCATION 1

CITY OF SAN DIEGO, CALIFORNIA
ENGINEERING AND CAPITAL PROJECTS DEPARTMENT
SHEET T1 OF 3 SHEETS

W.O. NO. S-00941

A. PALASEYED — 4/7/2011
FOR CITY ENGINEER — DATE

DESCRIPTION	BY	APPROVED	DATE	FILMED
ORIGINAL	SWE			
A	SWE	A. Palaseyed	5/15/12	

A. PALASEYED — SECTION HEAD
M. KOLL — PROJECT MANAGER
NAD 83
292-1743 — LAMBERT COORDINATES
CONTRACTOR ____ DATE STARTED ____
INSPECTOR ____ DATE COMPLETED ____
35490-T1-D

A ADDENDUM B

Mar 31, 2011 - 12:21pm K:\SND_TPTO\095279013\Design\sheets\279013-07.dwg tammie.moreno

LEGEND:

PORTABLE SIGN ● CONE

FLASHING ARROW BOARD

WORK ZONE

END CONSTRUCTION — G20-2

(TS) TRAFFIC SIGNAL

SIDEWALK CLOSED — R9-9

LANE CLOSED — C30 (CA)

W4-2 (RT)

ROAD WORK AHEAD — W20-1

BIKE LANE CLOSED — C30 (BIKE)

RIGHT LANE CLOSED AHEAD — W20-5 (RT)

BIKE LANE CLOSED AHEAD — W20-5 (BIKE)

SIDEWALK CLOSED CROSS HERE — R9-11A (RT)

SIDEWALK CLOSED AHEAD CROSS HERE — R9-11A (RT)

SIDEWALK CLOSED AHEAD CROSS HERE — R9-11 (LT)

SIDEWALK CLOSED CROSS HERE — R9-11A (LT)

LOCATION 2:

CONSTRUCT FOOTING FOR PEDESTRIAN BRIDGE ON SOUTH SIDE

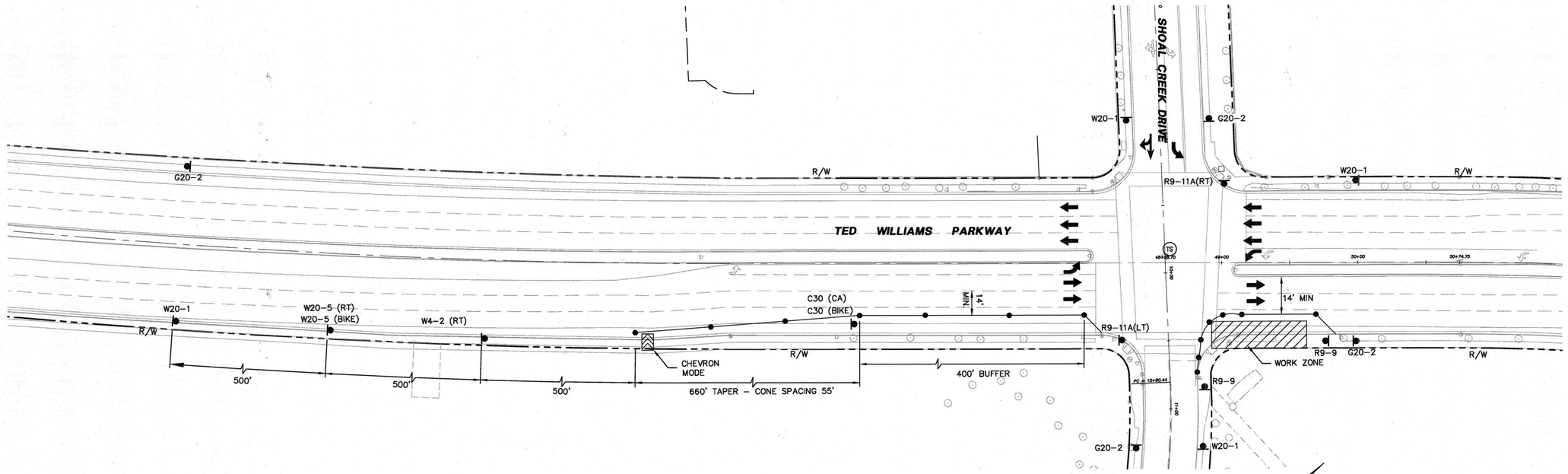

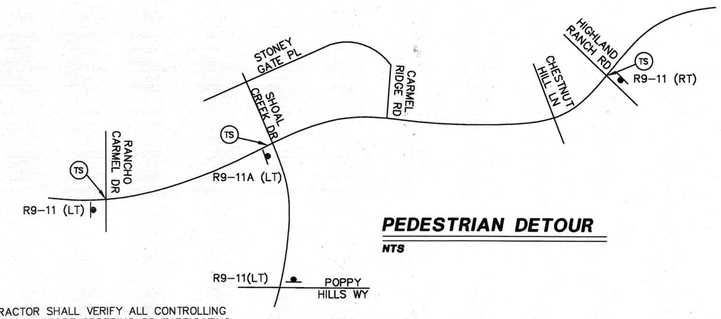

PEDESTRIAN DETOUR

NTS

NOTE: CONTRACTOR SHALL VERIFY ALL CONTROLLING FIELD DIMENSIONS BEFORE ORDERING OR FABRICATING ANY MATERIAL.

CONTRACTOR SHALL BE RESPONSIBLE FOR PROTECTING WORK ZONE WITH WITH 6' HIGH CHAIN LINK FENCE AROUND ALL CONSTRUCTION AND STAGING AREAS.

GRAPHIC SCALE

40' 0 20' 40' 80'

REGISTERED PROFESSIONAL ENGINEER — JON M. COLLINS — No. 62090 Exp. 09/30/11 — CIVIL — STATE OF CALIFORNIA

CITY OF SAN DIEGO

TRAFFIC ENGINEER FOR CITY ENGINEER — DATE 02/15/2012

(A)

IMPORTANT NOTICE

SECTION 4216/4217 OF THE GOVERNMENT CODE REQUIRES A DIG ALERT IDENTIFICATION NUMBER BE ISSUED BEFORE A "PERMIT TO EXCAVATE" WILL BE VALID. FOR YOUR DIG ALERT I.D. NUMBER CALL UNDERGROUND SERVICE ALERT 1-800-227-2600 OR DIAL 811 TWO WORKING DAYS BEFORE YOU DIG.

Kimley-Horn and Associates, Inc.

401 B Street · Suite 600 · San Diego, Ca. · 92101
Tel: (619) 234-9411 · Fax: (619) 234-9433

DATE: 4/1/11

PREPARED BY: JON M. COLLINS R.C.E. 62090
REGISTRATION EXPIRES: 09/30/11

CITY CONTRACT

SPECIFICATION NO. 4885 CITY CONTRACT, CIP NO. S-00941

PLANS FOR THE CONSTRUCTION OF:

TED WILLIAMS PARKWAY PEDESTRIAN OVERCROSSING AT SHOAL CREEK DRIVE

TRAFFIC CONTROL PLAN - LOCATION 2

CITY OF SAN DIEGO, CALIFORNIA
ENGINEERING AND CAPITAL PROJECTS DEPARTMENT
SHEET **T2** *OF* **3** *SHEETS*

W.O. NO. S-00941

A. Palaseyed FOR CITY ENGINEER — 4/7/2011 DATE

A. PALASEYED SECTION HEAD

M. KOLL PROJECT MANAGER

DESCRIPTION	BY	APPROVED	DATE	FILMED
ORIGINAL	SWE			
(B)	SWE	A. Palaseyed	8/16/12	

NAD 83
292-1743
LAMBERT COORDINATES

CONTRACTOR _____ DATE STARTED _____
INSPECTOR _____ DATE COMPLETED _____

35490-T2-D

(B) ADDENDUM B

LOCATION 3:
RESTRIPE SHOAL CREEK DRIVE PRIOR TO INSTALLING NEW CURB. INSTALL NEW CURB.

CONTRACTOR SHALL BE RESPONSIBLE FOR PROTECTING WORK ZONE WITH WITH 6' HIGH CHAIN LINK FENCE AROUND ALL CONSTRUCTION AND STAGING AREAS.

LEGEND:

- PORTABLE SIGN
- CONE
- WORK ZONE
- END CONSTRUCTION — G20-2
- FLASHING ARROW BOARD
- ROAD NARROWS — W5-1
- NARROW LANE — C12 (CA)
- LANE CLOSED — C30 (CA)
- W4-2 (LT)
- ROAD WORK AHEAD — W20-1
- SHOULDER WORK AHEAD — C24(CA)
- LEFT LANE CLOSED AHEAD — W20-5 (LT)
- SHOULDER CLOSED — C30A(CA)
- SIDEWALK CLOSED — R9-9

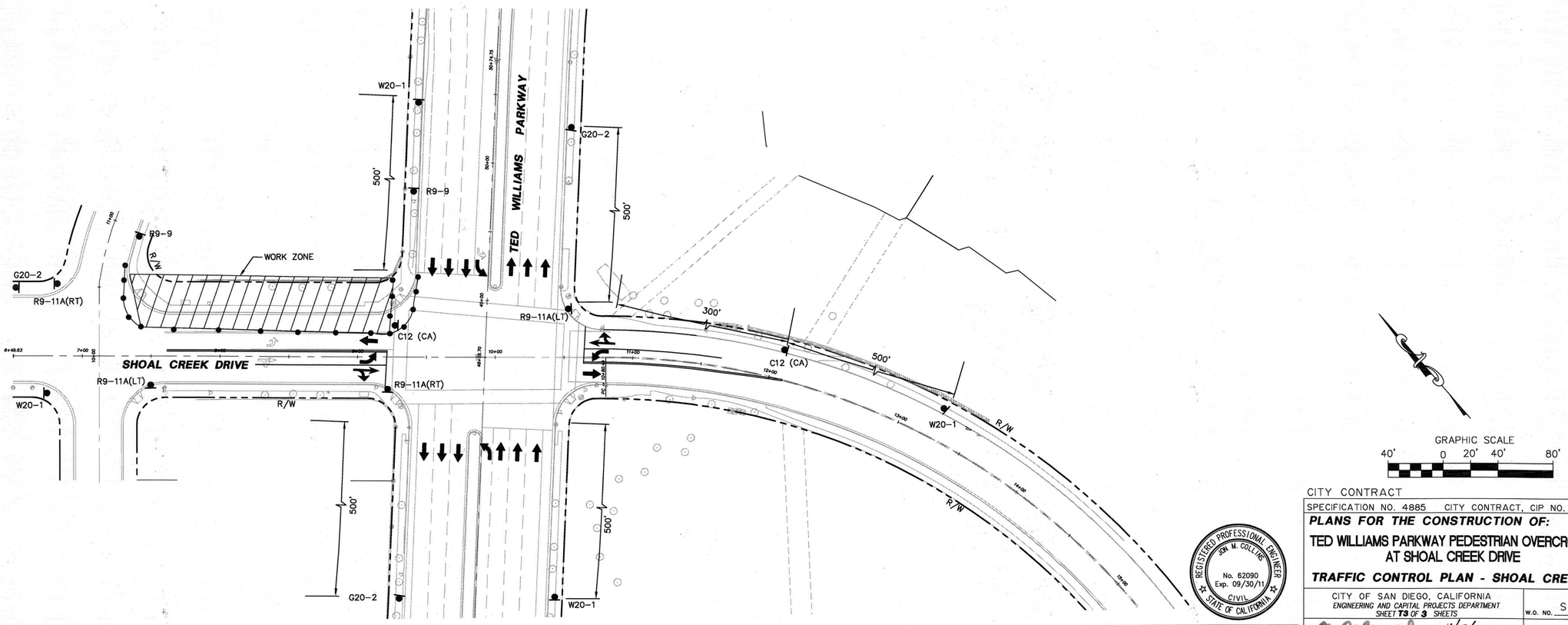

NOTE: CONTRACTOR SHALL VERIFY ALL CONTROLLING FIELD DIMENSIONS BEFORE ORDERING OR FABRICATING ANY MATERIAL.

CITY OF SAN DIEGO
TRAFFIC ENGINEER FOR CITY ENGINEER — DATE 02/15/2012 (B)

IMPORTANT NOTICE
SECTION 4216/4217 OF THE GOVERNMENT CODE REQUIRES A DIG ALERT IDENTIFICATION NUMBER BE ISSUED BEFORE A "PERMIT TO EXCAVATE" WILL BE VALID. FOR YOUR DIG ALERT I.D. NUMBER CALL UNDERGROUND SERVICE ALERT 1-800-227-2600 OR DIAL 811 TWO WORKING DAYS BEFORE YOU DIG.

Kimley-Horn and Associates, Inc.
401 B Street · Suite 600 · San Diego, Ca. · 92101
Tel: (619) 234-9411 · Fax: (619) 234-9433
DATE: 4/1/11
PREPARED BY: JON M. COLLINS R.C.E. 62090
REGISTRATION EXPIRES: 09/30/11

REGISTERED PROFESSIONAL ENGINEER JON M. COLLINS No. 62090 Exp. 09/30/11 CIVIL STATE OF CALIFORNIA

CITY CONTRACT
SPECIFICATION NO. 4885 CITY CONTRACT, CIP NO. S-00941

PLANS FOR THE CONSTRUCTION OF:
TED WILLIAMS PARKWAY PEDESTRIAN OVERCROSSING AT SHOAL CREEK DRIVE
TRAFFIC CONTROL PLAN - SHOAL CREEK DR

CITY OF SAN DIEGO, CALIFORNIA
ENGINEERING AND CAPITAL PROJECTS DEPARTMENT
SHEET T3 OF 3 SHEETS

W.O. NO. S-00941

FOR CITY ENGINEER — DATE 4/7/2011

DESCRIPTION	BY	APPROVED	DATE	FILMED
ORIGINAL	SWE			
(B)	SWE			

A. PALASEYED — SECTION HEAD
M. KOLL — PROJECT MANAGER
NAD 83
292-1743 — LAMBERT COORDINATES
CONTRACTOR ____ DATE STARTED ____
INSPECTOR ____ DATE COMPLETED ____

35490-T3-D

(B) ADDENDUM B

Mar 31, 2011 – 12:21pm K:\SND_TPTO\095279013\Design\sheets\279013-09.dwg tammie.moreno

City of San Diego

CONTRACTOR'S NAME: KTA Construction, Inc.
ADDRESS: 1920 Cordell Ct. #105 El Cajon, CA 92020
TELEPHONE NO.: 619-562-9464 FAX NO.: 619-562-1085
CITY CONTACT: Jeff Manchester, 600 B Street, Suite 800, MS 908A, San Diego, CA 92101-4520
jmanchester@sandiego.gov, Phone No.: 619-533-4661, Fax No.: 619-533-5176
NB/LS/CA

CONTRACT DOCUMENTS

FOR

TED WILLIAMS PARKWAY PEDESTRIAN OVERCROSSING AT SHOAL CREEK DRIVE

VOLUME 2 OF 2

BID NO.:	**K-13-4885-DBB-3**
SAP NO. (WBS/IO/CC):	**S-00941**
CLIENT DEPARTMENT:	**2112**
COUNCIL DISTRICT:	**5**
PROJECT TYPE:	**IC**
FEDERAL AID PROJECT NO.:	**HPLU 5004(168)**

THIS CONTRACT IS SUBJECT TO THE FOLLOWING:

- FEDERAL EQUAL OPPORTUNITY CONTRACTING REQUIREMENTS.
- PREVAILING WAGE RATES: STATE, FEDERAL, or BOTH
- APPRENTICE REQUIREMENTS.
- THIS IS A FHWA FUNDED CONTRACT THROUGH STATE OF CALIFORNIA DEPARTMENT OF TRANSPORTATION.

THIS BIDDING DOCUMENT TO BE SUBMITTED IN ITS ENTIRETY
REFER TO INVITATION TO BIDS FOR TIME, DATE, AND LOCATION

TABLE OF CONTENTS

Volume 2 - Bidding Documents

The following forms must be completed in their entirety and submitted with the Bid. Include the form(s) even if the information does not apply. Where the information does not apply write in N/A. Failure to include any of the forms may cause the Bid to be deemed **non-responsive.** If you are uncertain or have any questions about any required information, contact the City no later than 14 days prior to Bid due date.

DESCRIPTION	PAGE NUMBER
Proposal	3 – 5
Contractors Certification of Pending Actions	6
Debarment & Suspension Certificate Title 49, Code of Federal Regulations, Part 29	7
Non-Collusion Affidavit	8
Equal Employment Opportunity Certification	9
Public Contract Code Section 10162 Questionnaire	10
Non-Lobbying Certification	11
Lobby Prohibition, Certification and Disclosure	12
Instructions for Completion of SF-LLL, Disclosure of Lobbying Activities	13 - 14
Disclosure of Lobbying Activities	15 - 16
Proposal (Bid)	17 - 21
Form AA35 - List of Subcontractors	22
Form AA40 - Named Equipment/Material Supplier List	23

PROPOSAL

Bidder's General Information

To the City of San Diego:

Pursuant to "Invitation to Bids", specifications, and requirements on file with the City Clerk, and subject to all provisions of the Charter and Ordinances of the City of San Diego and applicable laws and regulations of the United States and the State of California, the undersigned hereby proposes to furnish to the City of San Diego, complete at the prices stated herein, the items or services hereinafter mentioned. The undersigned further warrants that this bid is not made in the interest of, or on behalf of, any undisclosed person, partnership, company, association, organization, or corporation; that the bid is genuine and not collusive or sham; that the bidder has not directly or indirectly induced or solicited any other bidder to put in a false or sham bid, and has not directly or indirectly colluded, conspired, connived, or agreed with any bidder or anyone else to put in a sham bid, or that anyone shall refrain from bidding; that the bidder has not in any manner, directly or indirectly, sought by agreement, communication, or conference with anyone to fix the bid price of the bidder or any other bidder, or to fix any overhead, profit, or cost element of the bid price, or of that of any other bidder, or to secure any advantage against the public body awarding the contract of anyone interested in the proposed contract; that all statements contained in the bid are true; and, further, that the bidder has not, directly or indirectly, submitted his or her bid price or any breakdown thereof, or the contents thereof, or divulged information or data relative thereto, or paid, and will not pay, any fee to any corporation, partnership, company, association, organization, bid depository, or to any member or agent thereof to effectuate a collusive or sham bid.

The undersigned bidder(s) further warrants that bidder(s) has thoroughly examined and understands the entire Contract Documents (plans and specifications) and the Bidding Documents therefore, and that by submitting said Bidding Documents as its bid proposal, bidder(s) acknowledges and is bound by the entire Contract Documents, including any addenda issued thereto, as such Contract Documents incorporated by reference in the Bidding Documents.

For the Caltrans funded contracts or Tasks, the Project shall be constructed in accordance with the Caltrans Special Provisions (including the payment of not less than the minimum wages set forth therein) and the Contract annexed hereto and in accordance with the Caltrans Standard Specifications dated May 2006, Standard Plans dated May 2006, Traffic Signal Control Equipment Specifications dated January, 1989, Labor Surcharge and Equipment Rental Rates in effect on the date the Work is accomplished, and General Prevailing Wage Rates of the State of California, Department of Transportation.

IF A SOLE OWNER OR SOLE CONTRACTOR SIGN HERE:

(1) Name under which business is conducted _____

(2) Signature (Given and surname) of proprietor _____

(3) Place of Business (Street & Number) _____

(4) City and State _____ Zip Code _____

(5) Telephone No. _____ Facsimile No. _____

IF A PARTNERSHIP, SIGN HERE:

(1) Name under which business is conducted _____

(2) Name of each member of partnership [indicate character of each partner, general or special (limited):

_____

_____

(3) Signature (Note: Signature must be made by a general partner)

_____

Full Name and Character of partner

_____

_____

(4) Place of Business (Street & Number) _____

(5) City and State _____ Zip Code _____

(6) Telephone No. _____ Facsimile No. _____

IF A CORPORATION, SIGN HERE:

(1) Name under which business is conducted KTA Construction Inc.

(2) Signature, with official title of officer authorized to sign for the corporation:

_____

(Signature)

Paul M. Henderson

(Printed Name)

President

(Title of Officer)

(Impress Corporate Seal Here)

(3) Incorporated under the laws of the State of California

(4) Place of Business (Street & Number) 1920 Cordell Ct. #105

(5) City and State El Cajon, CA Zip Code 92020

(6) Telephone No. 619-562-9464 Facsimile No. 619-562-1685

THE FOLLOWING SECTIONS MUST BE FILLED IN BY ALL PROPOSERS:

In accordance with the "**INVITATION TO BIDS**", the bidder holds a California State Contractor's license for the following classification(s) to perform the work described in these specifications:

LICENSE CLASSIFICATION A

LICENSE NO. 398284 EXPIRES January 31, 2013

This license classification must also be shown on the front of the bid envelope. Failure to show license classification on the bid envelope may cause return of the bid unopened.

TAX IDENTIFICATION NUMBER (TIN): [redacted]

E-Mail Address: N/A

THIS PROPOSAL MUST BE NOTARIZED BELOW:

I certify, under penalty of perjury, that the representations made herein regarding my State Contractor's license number, classification and expiration date are true and correct.

Signature _____ Title President

SUBSCRIBED AND SWORN TO BEFORE ME, THIS _____ DAY OF _____,2___.

Notary Public in and for the County of _____, State of _____.

_____

(NOTARIAL SEAL)

See attached

CALIFORNIA JURAT WITH AFFIANT STATEMENT

GOVERNMENT CODE § 8202

☑ See Attached Document (Notary to cross out lines 1–6 below)
☐ See Statement Below (Lines 1–6 to be completed only by document signer[s], *not* Notary)

1
2
3
4
5
6

Signature of Document Signer No. 1

Signature of Document Signer No. 2 (if any)

State of California

County of San Diego

Subscribed and sworn to (or affirmed) before me on this 27 (Date) day of August (Month), 2013 (Year), by

(1) Paul M. Henderson (Name of Signer),

proved to me on the basis of satisfactory evidence to be the person who appeared before me (.) (,)

(and

(2) n/a (Name of Signer),

proved to me on the basis of satisfactory evidence to be the person who appeared before me.)

Signature Jessica Anderson (Signature of Notary Public)

JESSICA ANDERSON
Commission # 1986476
Notary Public - California
San Diego County
My Comm. Expires Jul 26, 2016

Place Notary Seal Above

OPTIONAL

Though the information below is not required by law, it may prove valuable to persons relying on the document and could prevent fraudulent removal and reattachment of this form to another document.

Further Description of Any Attached Document

Title or Type of Document: _____

Document Date: _____ Number of Pages: _____

Signer(s) Other Than Named Above: _____

RIGHT THUMBPRINT OF SIGNER #1	RIGHT THUMBPRINT OF SIGNER #2
Top of thumb here	Top of thumb here

© 2010 National Notary Association • NationalNotary.org • 1-800-US NOTARY (1-800-876-6827)

CONTRACTORS CERTIFICATION OF PENDING ACTIONS

As part of its bid or proposal, Bidder shall provide to the City a list of all instances within the past ten years where a complaint was filed or pending against the Bidder in a legal or administrative proceeding alleging that Bidder discriminated against its employees, subcontractors, vendors or suppliers, and a description of the status or resolution of that complaint, including any remedial action taken.

CHECK ONE BOX ONLY.

☑ The undersigned certifies that within the past 10 years the Bidder has NOT been the subject of a complaint or pending action in a legal administrative proceeding alleging that Bidder discriminated against its employees, subcontractors, vendors or suppliers.

☐ The undersigned certifies that within the past ten years the Bidder has been the subject of a complaint or pending action in a legal administrative proceeding alleging that Bidder discriminated against its employees, subcontractors, vendors or suppliers. A description of the status or resolution of that complaint, including any remedial action taken and the applicable dates is as follows:

Contractor Name KTA Construction, Inc

Certified By Paul M. Henderson Title President
Name

Signature Date 8-27-12

USE ADDITIONAL FORMS AS NECESSARY

DEBARMENT AND SUSPENSION CERTIFICATION
TITLE 49, CODE OF FEDERAL REGULATIONS, PART 29

The Bidder, under penalty of perjury, certifies that, except as noted below, he/she or any person associated therewith in the capacity of owner, partner, director, officer, manager:

- Is not currently under suspension, debarment, voluntary exclusion, or determination of ineligibility by any Federal agency;
- has not been suspended, debarred, voluntarily excluded or determined ineligible by any Federal agency within the past three (3) years;
- does not have a proposed debarment pending; and
- has not been indicated, convicted, or had a civil judgment rendered against it by a court of competent jurisdiction in any matter involving fraud or official misconduct within the past three (3) years.

If there are any exceptions to this certification, insert the exceptions in the following space.

_____

_____

_____

_____

_____

_____

_____

_____

Exceptions will not necessarily result in denial of award, but will be considered in determining bidder responsibility. For any exception noted above, indicate below to whom it applies, initiating agency, and dates of action.

NOTE: Providing false information may result in criminal prosecution or administrative sanctions. The above certification is part of the Proposal. Signing this Proposal on the signature portion thereof shall also constitute signature of this Certification.

EQUAL BENEFITS ORDINANCE CERTIFICATION OF COMPLIANCE

For additional information, contact:
CITY OF SAN DIEGO
EQUAL BENEFITS PROGRAM
202 C Street, MS 9A, San Diego, CA 92101
Phone (619) 533-3948 Fax (619) 533-3220

COMPANY INFORMATION

Company Name: KTA Construction, Inc
Contact Name: Mike Henderson
Company Address: 1920 Cordell Ct. #105
Contact Phone: 619-562-9464
El Cajon, CA 92020
Contact Email: mike@kta construction.com

CONTRACT INFORMATION

Contract Title: Ted Williams Parkway Ped. Overcrossing @Shoal Creek Start Date: TBD
Contract Number (if no number, state location): End Date: TBD

SUMMARY OF EQUAL BENEFITS ORDINANCE REQUIREMENTS

The Equal Benefits Ordinance [EBO] requires the City to enter into contracts only with contractors who certify they will provide and maintain equal benefits as defined in SDMC §22.4302 for the duration of the contract. To comply:

- Contractor shall offer equal benefits to employees with spouses and employees with domestic partners.
  - Benefits include health, dental, vision insurance; pension/401(k) plans; bereavement, family, parental leave; discounts, child care; travel/relocation expenses; employee assistance programs; credit union membership; or any other benefit.
  - Any benefit not offer an employee with a spouse, is not required to be offered to an employee with a domestic partner.
- Contractor shall post notice of firm's equal benefits policy in the workplace and notify employees at time of hire and during open enrollment periods.
- Contractor shall allow City access to records, when requested, to confirm compliance with EBO requirements.
- Contractor shall submit *EBO Certification of Compliance*, signed under penalty of perjury, prior to award of contract.

NOTE: This summary is provided for convenience. Full text of the EBO and Rules Implementing the EBO are available at *www.sandiego.gov/administration.*

CONTRACTOR EQUAL BENEFITS ORDINANCE CERTIFICATION

Please indicate your firm's compliance status with the EBO. The City may request supporting documentation.

☑ I affirm **compliance** with the EBO because my firm *(contractor must select one reason):*

- ☑ Provides equal benefits to spouses and domestic partners.
- ☐ Provides no benefits to spouses or domestic partners.
- ☐ Has no employees.
- ☐ Has collective bargaining agreement(s) in place prior to January 1, 2011, that has not been renewed or expired.

☐ I request the City's approval to pay affected employees a cash equivalent in lieu of equal benefits and verify my firm made a reasonable effort but is not able to provide equal benefits upon contract award. I agree to notify employees of the availability of a cash equivalent for benefits available to spouses but not domestic partners and to continue to make every reasonable effort to extend all available benefits to domestic partners.

It is unlawful for any contractor to knowingly submit any false information to the City regarding equal benefits or cash equivalent associated with the execution, award, amendment, or administration of any contract. [San Diego Municipal Code §22.4307(a)]

Under penalty of perjury under laws of the State of California, I certify the above information is true and correct. I further certify that my firm understands the requirements of the Equal Benefits Ordinance and will provide and maintain equal benefits for the duration of the contract or pay a cash equivalent if authorized by the City.

Paul M. Henderson/President		8/27/12
Name/Title of Signatory	Signature	Date

FOR OFFICIAL CITY USE ONLY

Receipt Date: EBO Analyst: □ Approved □ Not Approved – Reason:

(Rev 02/15/2011)

NON-COLLUSION AFFIDAVIT TO BE EXECUTED BY BIDDER AND SUBMITTED WITH BID UNDER 23 UNITED STATES CODE 112 AND PUBLIC CONTRACT CODE 7106

State of California)
) ss.
County of San Diego)

Paul M. Henderson, being first duly sworn, deposes and says that he ~~or she~~ is President of the party making the foregoing bid that the bid is not made in the interest of, or on behalf of, any undisclosed person, partnership, company, association, organization, or corporation; that the bid is genuine and not collusive or sham; that the bidder has not directly or indirectly induced or solicited any other bidder to put in a false or sham bid, and has not directly or indirectly colluded, conspired, connived, or agreed with any bidder or anyone else to put in a sham bid, or that anyone shall refrain from bidding; that the bidder has not in any manner, directly or indirectly, sought by agreement, communication, or conference with anyone to fix the bid price of the bidder or any other bidder, or to fix any overhead, profit, or cost element of the bid price, or of that of any other bidder, or to secure any advantage against the public body awarding the contract of anyone interested in the proposed contract; that all statements contained in the bid are true; and further, that the bidder has not, directly or indirectly, submitted his or her bid price or any breakdown thereof, or the contents thereof, or divulged information or data relative thereto, or paid, and will not pay, any fee to any corporation, partnership, company association, organization, bid depository, or to any member or agent thereof to effectuate a collusive or sham bid.

Signed: _____

Title: President

Subscribed and sworn to before me this 27 day of August, 2012

_____

Notary Public (SEAL) See attached

CALIFORNIA JURAT WITH AFFIANT STATEMENT

GOVERNMENT CODE § 8202

☑ See Attached Document (Notary to cross out lines 1–6 below)
☐ See Statement Below (Lines 1–6 to be completed only by document signer[s], *not* Notary)

1
2
3
4
5
6

Signature of Document Signer No. 1

Signature of Document Signer No. 2 (if any)

State of California

County of San Diego

JESSICA ANDERSON
Commission # 1986476
Notary Public - California
San Diego County
My Comm. Expires Jul 28, 2016

Subscribed and sworn to (or affirmed) before me on this 27 (Date) day of August (Month), 2012 (Year), by

(1) Paul M. Henderson,
Name of Signer

proved to me on the basis of satisfactory evidence to be the person who appeared before me (.) (,)

(and

(2) N/A,
Name of Signer

proved to me on the basis of satisfactory evidence to be the person who appeared before me.)

Signature Jessica Anderson
Signature of Notary Public

Place Notary Seal Above

OPTIONAL

Though the information below is not required by law, it may prove valuable to persons relying on the document and could prevent fraudulent removal and reattachment of this form to another document.

RIGHT THUMBPRINT OF SIGNER #1	RIGHT THUMBPRINT OF SIGNER #2
Top of thumb here	Top of thumb here

Further Description of Any Attached Document

Title or Type of Document: _____

Document Date: _____ Number of Pages: _____

Signer(s) Other Than Named Above: _____

© 2010 National Notary Association • NationalNotary.org • 1-800-US NOTARY (1-800-876-6827)

BID BOND

KNOW ALL MEN BY THESE PRESENTS,

That KTA Construction, Inc. as Principal, and

The Guarantee Company of North America USA as Surety, are held and firmly bound unto The City of San Diego hereinafter called "OWNER," in the sum of **10% OF THE TOTAL BID AMOUNT** for the payment of which sum, well and truly to be made, we bind ourselves, our heirs, executors, administrators, successors, and assigns, jointly and severally, firmly by these presents.

WHEREAS, said Principal has submitted a Bid to said OWNER to perform the WORK required under the bidding schedule(s) of the OWNER's Contract Documents entitled

Ted Williams Parkway Pedestrian Overcrossing at Shoal Creek Drive

NOW THEREFORE, if said Principal is awarded a contract by said OWNER and, within the time and in the manner required in the "Invitation to Bids" enters into a written Agreement on the form of agreement bound with said Contract Documents, furnishes the required certificates of insurance, and furnishes the required Performance Bond and Payment Bond, then this obligation shall be null and void, otherwise it shall remain in full force and effect. In the event suit is brought upon this bond by said OWNER and OWNER prevails, said Surety shall pay all costs incurred by said OWNER in such suit, including a reasonable attorney's fee to be fixed by the court.

SIGNED AND SEALED, this 10th day of August, 20 12

KTA Construction, Inc. (SEAL)
(Principal)

By: _____
(Signature)

The Guarantee Company of
North America USA (SEAL)
(Surety)

By: _____
(Signature)
Lawrence F. McMahon, Attorney-in-Fact

(SEAL AND NOTARIAL ACKNOWLEDGEMENT OF SURETY)

CALIFORNIA ALL-PURPOSE ACKNOWLEDGMENT

STATE OF CALIFORNIA

County of San Diego }

On AUG 1 0 2012 (Date) before me, Jennifer L. Cox (Insert Name of Notary exactly as it appears on the official seal), Notary Public,

personally appeared Lawrence F. McMahon (Name(s) of Signer(s)),

who proved to me on the basis of satisfactory evidence to be the person(s) whose name(s) is/are subscribed to the within instrument and acknowledged to me that he/she/they executed the same in his/her/their authorized capacity(ies), and that by his/her/their signature(s) on the instrument the person(s), or the entity upon behalf of which the person(s) acted, executed the instrument.

I certify under PENALTY OF PERJURY under the laws of the State of California that the foregoing paragraph is true and correct.

Witness my hand and official seal.

Signature _____ (Signature of Notary Public) Jennifer L. Cox

JENNIFER L. COX
Commission # 1915197
Notary Public - California
San Diego County
My Comm. Expires Dec 4, 2014

Place Notary Seal Above

OPTIONAL

Though the information below is not required by law, it may prove valuable to persons relying on the document and could prevent fraudulent removal and reattachment of the form to another document.

Description of Attached Document

Title or Type of Document: _____

Document Date: _____ Number of Pages: _____

Signer(s) Other Than Named Above: _____

Capacity(ies) Claimed by Signer(s)

Signer's Name: _____

☐ Individual
☐ Corporate Officer — Title(s): _____
☐ Partner ☐ Limited ☐ General
☐ Attorney in Fact
☐ Trustee
☐ Guardian or Conservator
☐ Other: _____

Signer is Representing:

RIGHT THUMBPRINT OF SIGNER
Top of thumb here

Signer's Name: _____

☐ Individual
☐ Corporate Officer — Title(s): _____
☐ Partner ☐ Limited ☐ General
☐ Attorney in Fact
☐ Trustee
☐ Guardian or Conservator
☐ Other: _____

Signer is Representing:

RIGHT THUMBPRINT OF SIGNER
Top of thumb here

THE GUARANTEE COMPANY OF NORTH AMERICA USA

Southfield, Michigan

POWER OF ATTORNEY

KNOW ALL BY THESE PRESENTS: That **THE GUARANTEE COMPANY OF NORTH AMERICA USA**, a corporation organized and existing under the laws of the State of Michigan, having its principal office in Southfield, Michigan, does hereby constitute and appoint

Lawrence F. McMahon, Maria Vhanneza Guise, Sarah Myers, Charlotte Aquino
Alliant Insurance Services, Inc.

its true and lawful attorney(s)-in-fact to execute, seal and deliver for and on its behalf as surety, any and all bonds and undertakings, contracts of indemnity and other writings obligatory in the nature thereof, which are or may be allowed, required or permitted by law, statute, rule, regulation, contract or otherwise.

The execution of such instrument(s) in pursuance of these presents, shall be as binding upon **THE GUARANTEE COMPANY OF NORTH AMERICA USA** as fully and amply, to all intents and purposes, as if the same had been duly executed and acknowledged by its regularly elected officers at the principal office.

The Power of Attorney is executed and may be certified so, and may be revoked, pursuant to and by authority of Article IX, Section 9.03 of the By-Laws adopted by the Board of Directors of **THE GUARANTEE COMPANY OF NORTH AMERICA USA** at a meeting held on the 31st day of December, 2003. The President, or any Vice President, acting with any Secretary or Assistant Secretary, shall have power and authority:

1. To appoint Attorney(s)-in-fact, and to authorize them to execute on behalf of the Company, and attach the Seal of the Company thereto, bonds and undertakings, contracts of indemnity and other writings obligatory in the nature thereof; and

2. To revoke, at any time, any such Attorney-in-fact and revoke the authority given, except as provided below

3. In connection with obligations in favor of the Kentucky Department of Highways only, it is agreed that the power and authority hereby given to the Attorney-in-Fact cannot be modified or revoked unless prior written personal notice of such intent has been given to the Commissioner – Department of Highways of the Commonwealth of Kentucky at least thirty (30) days prior to the modification or revocation.

Further, this Power of Attorney is signed and sealed by facsimile pursuant to resolution of the Board of Directors of the Company adopted at a meeting duly called and held on the 31st day of December 2003, of which the following is a true excerpt:

RESOLVED that the signature of any authorized officer and the seal of the Company may be affixed by facsimile to any Power of Attorney or certification thereof authorizing the execution and delivery of any bond, undertaking, contracts of indemnity and other writings obligatory in the nature thereof, and such signature and seal when so used shall have the same force and effect as though manually affixed.

IN WITNESS WHEREOF, **THE GUARANTEE COMPANY OF NORTH AMERICA USA** has caused this instrument to be signed and its corporate seal to be affixed by its authorized officer, this 18th day of January, 2011.

THE GUARANTEE COMPANY OF NORTH AMERICA USA

Stephen C. Ruschak, Vice President

Randall Musselman, Secretary

STATE OF MICHIGAN
County of Oakland

On this 18th day of January, 2011 before me came the individuals who executed the preceding instrument, to me personally known, and being by me duly sworn, said that each is the herein described and authorized officer of The Guarantee Company of North America USA; that the seal affixed to said instrument is the Corporate Seal of said Company; that the Corporate Seal and each signature were duly affixed by order of the Board of Directors of said Company.

Cynthia A. Takai
Notary Public, State of Michigan
County of Oakland
My Commission Expires February 27, 2012
Acting in Oakland County

IN WITNESS WHEREOF, I have hereunto set my hand at The Guarantee Company of North America USA offices the day and year above written.

Cynthia A. Takai

I, Randall Musselman, Secretary of **THE GUARANTEE COMPANY OF NORTH AMERICA USA**, do hereby certify that the above and foregoing is a true and correct copy of a Power of Attorney executed by **THE GUARANTEE COMPANY OF NORTH AMERICA USA**, which is still in full force and effect.

IN WITNESS WHEREOF, I have thereunto set my hand and attached the seal of said Company this day of AUG 10 2012

Randall Musselman, Secretary

CALIFORNIA ALL-PURPOSE ACKNOWLEDGMENT

State of California
County of San Diego }

On 8/27/12 (Date) before me, Jessica Anderson / Notary Public (Here Insert Name and Title of the Officer)

personally appeared Paul M. Henderson (Name(s) of Signer(s))

,

who proved to me on the basis of satisfactory evidence to be the person(s) whose name(s) is/~~are~~ subscribed to the within instrument and acknowledged to me that he/~~she/they~~ executed the same in his/~~her/their~~ authorized capacity(ies), and that by his/~~her/their~~ signature(s) on the instrument the person(s), or the entity upon behalf of which the person(s) acted, executed the instrument.

I certify under PENALTY OF PERJURY under the laws of the State of California that the foregoing paragraph is true and correct.

WITNESS my hand and official seal.

Signature Jessica Anderson (Signature of Notary Public)

JESSICA ANDERSON
Commission # 1986476
Notary Public - California
San Diego County
My Comm. Expires Jul 28, 2016

Place Notary Seal Above

OPTIONAL

Though the information below is not required by law, it may prove valuable to persons relying on the document and could prevent fraudulent removal and reattachment of this form to another document.

Description of Attached Document

Title or Type of Document: _____

Document Date: _____ Number of Pages: _____

Signer(s) Other Than Named Above: _____

Capacity(ies) Claimed by Signer(s)

Signer's Name: _____
☐ Individual
☐ Corporate Officer — Title(s): _____
☐ Partner — ☐ Limited ☐ General
☐ Attorney in Fact
☐ Trustee
☐ Guardian or Conservator
☐ Other: _____
Signer Is Representing: _____

RIGHT THUMBPRINT OF SIGNER
Top of thumb here

Signer's Name: _____
☐ Individual
☐ Corporate Officer — Title(s): _____
☐ Partner — ☐ Limited ☐ General
☐ Attorney in Fact
☐ Trustee
☐ Guardian or Conservator
☐ Other: _____
Signer Is Representing: _____

RIGHT THUMBPRINT OF SIGNER
Top of thumb here

©2007 National Notary Association • 9350 De Soto Ave., P.O. Box 2402 • Chatsworth, CA 91313-2402 • www.NationalNotary.org Item #5907 Reorder: Call Toll-Free 1-800-876-6827

(THE BIDDER'S EXECUTION ON THE SIGNATURE PORTION OF THIS PROPOSAL SHALL ALSO CONSTITUTE AN ENDORSEMENT AND EXECUTION OF THOSE CERTIFICATIONS WHICH ARE A PART OF THIS PROPOSAL)

EQUAL EMPLOYMENT OPPORTUNTITY CERTIFICATION

The Bidder KTA CONSTRUCTION INC., proposed Subcontractor _____, hereby certifies that he has ✓, has not _____, participated in a previous contract or subcontract subject to the equal opportunity clause, as required by Executive Orders 10925, 11114, or 11246, and that, where required, he has filed with the Joint Reporting Committee, the Director of the Office of Federal Contract Compliance, a Federal Government contracting or administering agency, or the former President's Committee on Equal Employment Opportunity, all reports due under the applicable filing requirements.

Note: The above certification is required by the Equal Employment Opportunity Regulations of the Secretary of Labor (41 CFR 60-1.7(b) (1), and must be submitted by bidders and proposed Subcontractors only in connection with contracts and subcontracts which are subject to the equal opportunity clause as set forth in 41 CFR 601.5 (Generally only contracts or subcontracts of $10,000 or under are exempt).

Currently, Standard Form 100 (EEO-1) is the only report required by the Executive Orders or their implementing regulations.

Proposed prime Contractors and Subcontractors who have participated in a previous contract or subcontract subject to the Executive Orders and have not filed the required reports should note that 41 CFR 601.7(b)(1) prevents the award of contracts and subcontracts unless such Contractor submits a report covering the delinquent period or such other period specified by the Federal Highway Administration or by the Director, Office of Federal Contract Compliance, U.S. Department of Labor.

PUBLIC CONTRACT CODE SECTION 10162 QUESTIONNAIRE

In accordance with Public Contract Code Section 10162, the Bidder shall complete, under penalty of perjury, the following questionnaire:

Has the bidder, any officer of the bidder, or any employee of the bidder who has a proprietary interest in the bidder, ever been disqualified, removed, or otherwise prevented from bidding on, or completing a federal, state, or local government project because of a violation of law or a safety regulation?

YES _____ NO ✓

If the answer is yes, explain the circumstances in the following space:

PUBLIC CONTRACT SECTION 10232 STATEMENT

In accordance with Public Contract Code Section 10232, the Contractor hereby states under penalty of perjury, that no more than one (1) final unappealable finding of contempt of court by a federal court has been issued against the Contractor within the immediately preceding two (2) year period because of the Contractor's failure to comply with an order of a federal court which orders the Contractor to comply with an order of the National Labor Relations Board.

PUBLIC CONTRACT CODE SECTION 10285.1 STATEMENT

In accordance with Public Contract Code Section 10285.1 (Chapter 376, Stats. 1985), the bidder, hereby declares under penalty of perjury under the laws of the State of California that the bidder has ___, has not ___, been convicted within the preceding three years of any offenses referred to in that section, including any charge of fraud, bribery, collusion, conspiracy, or any other act in violation of any state or federal antitrust law in connection with the bidding upon, award of, or performance of, any public works contract, as defined in Public contract Code Section 1101, with any public entity, as defined in Public Contract Code Section 1100, including the Regents of the University of California or the Trustees of the California State University. The term "bidder" is understood to include any partner, member, officer, director, responsible managing officer, or responsible managing employee thereof, as referred to in Section 10285.1.

NOTE: THE BIDDER MUST PLACE A CHECK MARK AFTER "HAS" OR "HAS NOT" IN ONE OF THE BLANK SPACES PROVIDED.

THE ABOVE STATEMENTS ARE PART OF THE PROPOSAL. SIGNING THIS PROPOSAL ON THE SIGNATURE PORTION THEREOF SHALL ALSO CONSTITUTE SIGNATURE OF THESE STATEMENTS.

BIDDERS ARE CAUTIONED THAT MAKING A FALSE CERTIFICATION MAY SUBJECT THE CERTIFIER TO CRIMINAL PROSECUTION.

By my signature on this Proposal I certify, under penalty of perjury under the laws of the State of California, that the foregoing questionnaire and statements of Public Contract Code Sections 10162, 10232 and 10285.1 are true and correct and that the bidder has complied with the requirements of Section 8103 of the Fair Employment and Housing Commission Regulations (Chapter 5, Title 2 of the California Administrative Code). By my signature on this Proposal I further certify, under penalty of perjury under the laws of the State of California and the United States of America, that the Title 23 United States Code, Section 112, Non-Collusion Affidavit," and the Title 49 Code of Federal Regulations, Part 29, "Debarment and Suspension Certification," are true and correct.

NON-LOBBYING CERTIFICATION
(FOR FEDERAL-AID CONTRACTS)

The prospective participant certifies, by signing and submitting this bid or proposal, to the best of his or her knowledge and belief, that:

(1) No federal appropriated funds have been paid or will be paid, by or on behalf of the undersigned, to any person for influencing or attempting to influence an officer or employee of any federal agency, a Member of Congress, an officer or employee of Congress, or an employee of a Member of Congress in connection with the awarding of any federal contract, the making of any federal grant, the making of any federal loan, the entering into of any cooperative agreement, and the extension, continuation, renewal amendment, or modification of any federal contract, grant, loan, or cooperative agreement.

(2) If any funds other than federal appropriated funds have been paid or will be paid to any person for influencing or attempting to influence an officer or employee of any federal agency, a Member of Congress, an officer or employee of Congress, or an employee of a Member of Congress in connection with this federal contract, grant, loan, or cooperative agreement, the undersigned shall complete and submit Standard Form-LLL, "Disclosure of Lobbying Activities", in accordance with its instructions.

This certification is a material representation of fact upon which reliance was placed when this transaction was made or entered into. Submission of this certification is a prerequisite for making or entering into this transaction imposed by Section 1352, Title 31, U.S. Code. Any person who fails to file the required certification shall be subject to a civil penalty of not less than $10,000 and not more than $100,000 for each such failure.

The prospective participant also agrees by submitting his or her bid or proposal that he or she shall require that the language of this certification be included in all lower tier subcontractors, which exceed $100,000 and that all such subrecipients shall certify and disclose accordingly.

LOBBY PROHIBITION, CERTIFICATION AND DISCLOSURE

In acknowledgment that funds received under this agreement have been provided pursuant to a Federal grant, recipient hereby recognizes the prohibitions against lobbying the Federal government with any of these funds. Recipient agrees that it shall comply with the laws set forth at 31 U.S.C. § 1352 (1989) and 24 C.F.R. part 87, to wit:

A. Conditions on use of funds

Recipient shall not expend any funds received pursuant to this agreement to pay any person to influence an officer or employee of Federal agency, a member of Congress, an officer or employee of Congress, or an employee of a member of Congress in connection with any of the following Covered Federal actions:

(1) The awarding of any federal contract
(2) The making of any Federal grant
(3) The making of any Federal Loan
(4) The entering into of any cooperative agreement
(5) The extension, continuation, renewal, amendment, or modification of any Federal contract, grant, loan, or cooperative agreement.

For purposes of defining the terms of this part of the agreement, the definitions set forth in 24 C.F.R. § 87.105 are hereby adopted and incorporated herein by reference.

B. Certification and Disclosure

Each recipient at every tier under this agreement shall file a certification regarding lobbying, and a Disclosure Form-LLL, where required by 24 C.F.R. § 87.110. The certification form and Disclosure Form-LLL are attached to this agreement.

C. Certifications must be filed:

(1) By any person upon each submission that initiates agency consideration for an award of a Federal contract, grant, or cooperative agreement exceeding $100,000, or a Federal loan or loan guarantee exceeding $150,000.
(2) Upon receipt by any person of a Federal contract, grant, or cooperative agreement exceeding $100,000, or upon receipt of a Federal loan or loan guarantee exceeding $150,000.
(3) By any person who requests or receives from a person referred to in subsections 1 and 2 of this paragraph:
   a. A subcontract exceeding $100,000 at any tier under a Federal contract;
   b. A subgrant, contract or subcontract exceeding $100,000 at any tier under a Federal grant;
   c. A contract or subcontract exceeding $100,000 at any tier under a Federal loan exceeding $150,000;
   d. A contract or subcontract exceeding $100,000 at any tier under a Federal cooperative agreement.

D. Disclosure Forms-LLL must be filed in every instance when a person applies for, requests, or receives Federal appropriations exceeding $100,000 pursuant to a contract, subcontract, grant, subgrant, loan, or cooperative agreement when such person has paid or expects to pay any sum, in cash or in kind, to influence or attempt to influence any officer or employee of an agency, a member of Congress, an officer or employee of Congress, or an employee of a member of Congress. Further, Disclosure Form-LLL must be filed by recipients at any tier at the end of each calendar quarter in which there occurs any event that requires disclosure or materially affects information submitted in prior disclosures. Such events include:

(1) 1. An increase of $25,000 in the amount paid or expected to be paid for influencing or attempting to influence a covered Federal action;
(2) 2. A change in the person(s) influencing or attempting to influence a covered action;
(3) 3. A change in the officer(s), employee(s), or member(s) contacted to influence a covered action.

All disclosure Forms-LLL, but not certifications, shall be forwarded from tier to tier until received by the principal recipient, which in turn will file them with the appropriate Federal agency.

Federal Register/Vol. 55, No. 38/Monday, February 26, 1990/Rules and Regulations 6744

INSTRUCTIONS FOR COMPLETION OF SF-LLL, DISCLOSURE OF LOBBYING ACTIVITIES

This disclosure form shall be completed by the reporting entity, whether subawardee or prime Federal recipient, at the initiation or receipt of a covered Federal action, or a material change to a previous filing, pursuant to title 31 U.S.C. section 1352. The filing of a form is required for each payment or agreement to make payment to any lobbying entity for influencing or attempting to influence an officer or employee of any agency, a Member of Congress, an officer or employee of Congress, or an employee of a Member of Congress in connection with a covered Federal action. Use the SF-LLL-A Continuation Sheet for additional information if the space on the form is inadequate. Complete all items that apply for both the initial filing and material change report. Refer to the implementing guidance published by the Office of Management and Budget for additional information.

1. Identify the type of covered Federal action for which lobbying activity is and/or has been secured to influence the outcome of a covered Federal action.

2. Identify the status of the covered Federal action.

3. Identify the appropriate classification of this report. If this is a follow-up report caused by a material change to the information previously reported, enter the year and quarter in which the change occurred. Enter the date of the last previously submitted report by this reporting entity for this covered Federal action.

4. Enter the full name, address, city, state and zip code of the reporting entity. Include Congressional District, if known, Check the appropriate classification of the reporting entity that designates if it is, or expects to be, a prime or subaward recipient. Identify the tier of the subawardee, e.g., the first subawardee of the prime is the 1st tier. Subawards include but are not limited to subcontracts, subgrants and contract awards under grants.

5. If the organization filing the report in item 4 checks "Subawardee", then enter the full name, address, city, state and zip code of the prime Federal recipient. Include Congressional District, if known.

6. Enter the name of the Federal agency making the award or loan commitment. Include at least one organizational level below agency name, if known. For example, Department of Transportation, United States Coast Guard.

7. Enter the Federal program name or description for the covered Federal action (item 1). If known, enter the full Catalog of Federal Domestic Assistance (CFDA) number for grants, cooperative agreements, loans, and loan commitments.

8. Enter the most appropriate Federal identifying number available for the Federal action identified in item 1 (e.g., Request for Proposal (RFP) number; Invitation for Bid (IFB) number; grant announcement number; the contract, grant, or loan award number; the application/proposal control number assigned by the Federal agency). Include prefixes, e.g., "RFP-DE-90-001."

9. For a covered Federal action where there has been an award or loan commitment by the Federal agency, enter the Federal amount of the award/loan commitment for the prime entity identified in item 4 or 5.

10. (a) Enter the full name, address, city, state and zip code of the lobbying entity engaged by the reporting entity identified in item 4 to influence the covered Federal action.

    (b) Enter the full names of the individual(s) performing services, and include full address if different from 10 (a). Enter Last Name, First Name, and Middle Initial (MI).

11. Enter the amount of compensation paid or reasonably expected to be paid by the reporting entity (item 4) to the lobbying entity (item 10). Indicate whether the payment has been made (actual) or will be made (planned). Check all boxes that apply. If this is a material change report, enter the cumulative amount of payment made or planned to be made.

12. Check the appropriate box(es). Check all boxes that apply. If payment is made through an in-kind contribution, specify the nature and value to the in-kind payment.

13. Check the appropriate box(es). Check all boxes that apply. If other, specify nature.

14. Provide a specific and detailed description of the services that the lobbyist has performed, or will be expected to perform, and the date(s) of any services rendered. Include all preparatory and related activity, not just time spent in actual contact with Federal officials. Identify the Federal official(s) or employees(s) contacted or the officer(s), employee(s), or Member(s) of Congress that were contacted.

15. Check whether or not a SF-LLL-A Continuation Sheet(s) is attached.

16. The certifying official shall sign and date the form, print his/her name, title, and telephone number.

Public reporting burden for this collection of information is estimated to average 30 minutes per response, including time for reviewing instructions, searching existing data sources, gathering and maintaining the data needed, and completing and reviewing the collection of information. Send comments regarding the burden estimate or any other aspect of this collection of information, including suggestions for reducing this burden, to the Office of Management and Budget, Paperwork Reduction Project (0348-0046), Washington, D.C. 20503.

Federal Register / Vol. 55, No. 38 / Monday, February 26, 1990 / Rules and Regulations 6743

DISCLOSURE OF LOBBYING ACTIVITIES

Approved by OMB 0348-0046

Complete this form to disclose lobbying activities pursuant to 31 U.S.C. 1352

(See reverse for public burden disclosure.)

1. Type of Federal Action:	2. Status of Federal Action:	3. Report Type:
☑ a. contract b. grant c. cooperative agreement d. loan e. loan guarantee f. loan insurance	☑ a. bid offer application b. initial award c. post-award	☑ a. initial filing b. material change For Material Change Only: Year_____quarter_____ date of last report_____

4. Name and Address of Reporting Entity:	5. If Reporting Entity in No. 4 is Subawardee. Enter Name and Address of Prime:
☑ Prime ☐ Subawardee KIA CONS. INC. 1920 CONTRACT. EL CAJON, CA. 92020 Tier_____, *if known:* Congressional District, *if known*	Congressional District, *if known:*
6. Federal Department/Agency: FHWA - CALF. DEPT. OF TRANSPORTATION	7. Federal Program Name/Description: FHWA CFDA Number: *if known*
8. Federal Action Number, *if known* HPLU 5004 (168)	9. Award Amount, *if known* $
10. a. Name and Address of Lobbying Entity *(if individual, last name, first name, M.I.)* *(attach Continuation*	b. Individuals Performing services *(including address if different from No. 10a) (last name, first name, M.I.)* *Sheet(s) SF-LLL-A if necessary)*
11. Amount of Payment *(check all that apply)*: $_____ ☐ actual ☐ planned	13. Type of Payment *(check all that apply)*: ☐ a. retainer ☐ b. one-time fee ☐ c. commission ☐ d. contingent fee ☐ e. deferred ☐ f. other: specify_____
12. Form of Payment *(check all that apply)*: ☐ a. cash ☐ b. in kind: specify: nature_____ value_____	

14. Brief Description of Services Performed or to be Performed and Date(s) of Service, including officer(s), employee(s), or Member(s) contacted for Payment Indicated in Item 11:

(attach Continuation Sheet(s) SF-LLL-A if necessary)

15. Continuation Sheet(s) SF-LLL-A attached: ☑ YES ☐ NO

16. Information requested through this form is authorized by title 31 U.S.C. section 1352. This disclosure of lobbying activities is a material representation of fact upon which reliance was placed by the tier above when this transaction was made or entered into. This disclosure is required pursuant to 31 U.S.C. 1352. This information will be reported to the Congress semiannually and will be available for public inspection. Any person who fails to file the required disclosure shall be subject to a civil penalty of not less than $10,000 and not more than $100,000 for each such failure.	Signature: [signature] Print Name: Paul M. Hansrason Title: President Telephone No.: 619-562-9464 Date: 3-23-12
Federal Use Only	Authorized for Local Reproduction Standard Form - LLL

Reporting Entity: KTA CONSTRUCTION INC.
Page 1 of 2

BILLING CODES 3410-01-C; 6450-01-C; 6690-01-C; 8025-01-C; 7510-01-C; 3510-FE-C; 8120-01-C; 4710-24-C; 6116-01-C; 6051-01-C; 8230-01-C; 3210-01-C; 4210-32-C; 4410-18-C; 4510-23-C; 4810-25-C; 3801-01-C; 4000-01-C; 3820-01-C; 6580-50-C; 6820-01-C; 4310-RF-C; 6718-01-C; 4150-04-C; 7555-01-C; 7537-01-C; 7536-01-C; 6050-28-C; 4910-62-C

Authorized for Local Reproduction
Standard Form -LLL-A

PROPOSAL (BID)

The Bidder agrees to the construction of **TED WILLIAMS PARKWAY PEDESTRIAN OVERCROSSING AT SHOAL CREEK DRIVE,** for the City of San Diego, in accordance with these contract documents for the prices listed below. The Bidder guarantees the Contract Price for a period of 120 days (90 days for Federally Funded Contracts or Contracts valued at $500,000 or less) from the date of Bid opening to Award of the Contract. The duration of the Contract Price guarantee shall be extended by the number of days required for the City to obtain all items necessary to fulfill all conditions precedent e.g., bond and insurance.

Item	Quantity	Unit	Caltrans Standard Specification No.	Caltrans Special Provisions No.	City of San Diego Standard Specification No.	NAICS	Description	Unit Price	Extension
1(F)	156	CY	19-3.08	13-1.18	NA	NA	Structure Excavation (Bridge)	$ 73.-	$ 11395.-
2(F)	117	CY	19-3.08	13-1.18	NA	NA	Structure Backfill (Bridge)	$ 100.-	$ 11700.-
3(F)	882	CY	19-3.08	13-1.18	NA	NA	Structure Excavation (Retaining Wall)	$ 115.-	$ 101430.-
4(F)	679	CY	19-3.08	13-1.18	NA	NA	Structure Backfill (Retaining Wall)	$ 80.-	$ 54320.-
5	66	LF	49-6.02	13-1.22	NA	NA	24" Diameter Cast-In-Drilled-Hole Concrete Piling	$ 210.-	$ 13860.-
6	139	LF	49-6.02	13-1.22	NA	NA	66" Diameter Cast-In-Drilled-Hole Concrete Piling	$ 1010.-	$ 140,390.-
7(F)	33	CY	51-1.23	13-1.47	NA	NA	Structural Concrete, Bridge Footing	$ 400.-	$ 13,200.-
8(F)	330	CY	51-1.23	13-1.47	NA	NA	Structural Concrete, Bridge	$ ~~1,475~~ 1,300 EMH	$ ~~486,750~~ 429,000 EMH
9(F)	306	CY	51-1.23	13-1.47	NA	NA	Structural Concrete, Retaining Wall	$ 670.-	$ 205020.-
10(F)	23	CY	73-1.08	13-1.32	NA	NA	Minor Concrete (Ramp Paving)	$ 500.-	$ 11500.-

Item	Quantity	Unit	Caltrans Standard Specification No.	Caltrans Special Provisions No.	City of San Diego Standard Specification No.	NAICS	Description	Unit Price	Extension
11(F)	116500	LB	52-1.11	5-1.13	NA	NA	Bar Reinforcing Steel (Bridge)	$ 1.20	$ 139,800.-
12(F)	43300	LB	52-1.11	5-1.13	NA	NA	Bar Reinforcing Steel (Retaining Wall)	$ 1.35	$ 58,455.-
13	1	LS	50-1.11	49-6.02	NA	NA	Prestressing Cast-In-Place Concre		$ 55,000.-
14	2	EA	51.1.23	13-1.24	NA	NA	Furnish Precast Girders	$ 60,000.-	$ 120,000.-
15	2	EA	51.1.23	13-1.24	NA	NA	Erect Precast Girders	$ 17,000.-	$ 34,000.-
16	18	LF	51.1.23	13-1.24	NA	NA	Joint Seal (Type B - MR 1 1/4")	$ 150.-	$ 2700.-
17	9	LF	51.1.23	13-1.24	NA	NA	Joint Seal (Type B - MR 2")	$ 175.-	$ 1575.-
18	9	LF	51.1.23	13-1.24	NA	NA	Joint Seal (Type B - MR 2 1/2")	$ 180.-	$ 1620.-
19(F)	2900	SF	NA	13-1.45	NA	NA	Architectural Finish (Stone Facad	$ 18.- PMH	$ 52,200.- PMH
20	18600	SF	NA	13-1.28	NA	NA	Prepare and Stain Concrete	$ 2.-	$ 37200.-
21	16820	SF	NA	13-1.46	NA	NA	Anti-Graffiti Protective Coating	$ 1.-	$ 16820.-
22(F)	1283	LF	83-2.04	13-1.41	NA	NA	Concrete Barrier	$ 85.-	$ 109055.-
23(F)	830	LF	83-1.04	13-1.38	NA	NA	Metal Bridge Railing (Type A)	$ 116.-	$ 96230.-
24(F)	174	LF	83-1.04	13-1.38	NA	NA	Metal Bridge Railing (Type B)	$ 390.-	$ 67860.-
25(F)	137	LF	83-1.04	13-1.38	NA	NA	Metal Bridge Railing (Type C)	$ 490.-	$ 67130.-
26(F)	137	LF	83-1.04	13-1.38	NA	NA	Metal Bridge Railing (Type D)	$ 175.-	$ 23975.-
27	140	LF	83-1.04	13-1.40	NA	NA	Cable Railing	$ 40.-	$ 5600.-
28(F)	266	LB	75-1.07	13-1.36	NA	NA	Bridge Deck Drainage System	$ 30.-	$ 7980.-
29	1	LS	NA	13-1.47	NA	NA	Bronze Plaques		$ 10,000.-

Item	Quantity	Unit	Caltrans Standard Specification No.	Caltrans Special Provisions No.	City of San Diego Standard Specification No.	NAICS	Description	Unit Price	Extension
30	1	LS	NA	13-1.28	NA	NA	Architectural Referee Sample		$ 500.-
31	102	LF	NA	13-1.50	NA	NA	Fence Wall	$ 225.-	$ 22950.-
32	1	LS	NA	21-1.03	NA	NA	Maintain Existing Planted Area		$ 2000.-
33	1	LS	NA	21-1.01	NA	NA	Highway Planting		$ 55000.-
34	1	LS	NA	21-1.17	308-8	561730	Plant Establishment Work (90 Day Period)		$ 27500.-
35	1	LS	NA	NA	308-8	561730	Maintain Existing Irrigation Facilities		$ 2000.-
36	1	LS	NA	21-1.02	308-8	561730	Irrigation System		$ 55000.-
37	1	LS	86-1	NA	NA	NA	Electrical Work		$ 61,000.-
38	1	LS	86-8.01	NA	NA	NA	Signals, Lighting and Electrical Systems		$ 98,000.-
39	1	LS	NA	NA	7-10.2.7	237310	Traffic Control		$ 35,000.-
40	1	LS	84-2.06	13-1.42	NA	NA	Traffic Stripes and Pavement Markings		$ 19000.-
41	31	CY	NA	NA	200-3	237310	Cement Treated Permeable Base	$ 200.-	$ 6200.-
42	296	CY	NA	NA	300-2.9	237310	Grading	$ 27.-	$ 7992.-
43	1	LS	NA	NA	800-2.15	238390	Clearing and Grubbing		$ 16,000.-
44	900	SF	NA	NA	302-2	237310	Schedule 'J' Pavement – Class 'F'	$ 12.-	$ 10,800.-
45	2	EA	NA	NA	303-5.10.02	237310	Minor Concrete, Curb Ramp - Type A	$ 2500.-	$ 5000.-

Item	Quantity	Unit	Caltrans Standard Specification No.	Caltrans Special Provisions No.	City of San Diego Standard Specification No.	NAICS	Description	Unit Price	Extension
46	1	EA	NA	NA	303-5.10.02	237310	Minor Concrete, Curb Ramp - Type A-1	$ 2500.-	$ 2500.-
47	2965	SF	NA	NA	303-5.09	237310	Minor Concrete, Sidewalk (4")	$ 7.-	$ 20755.-
48	280	LF	NA	NA	303-5.9	237310	Minor Concrete, Curb And Gutter (Type G)	$ 40.-	$ 11200.-
49	163	LF	NA	NA	303-1.11	237110	Minor Concrete, Brow Ditch	$ 30.-	$ 4890.-
50	4	EA	NA	NA	303-1.11	237110	Brooks Box Catch Basin	$ 750.-	$ 3000.-
51	1	EA	NA	NA	306-1.6	237110	Minor Concrete, Cleanout	$ 500.-	$ 500.-
52	2	EA	NA	NA	303-1.11	237110	Minor Concrete, Curb Outlet	$ 2500.-	$ 5000.-
53	65	LF	NA	13-1.29	NA	NA	6" PVC Pipe (Horizontal Drains)	$ 50.-	$ 3250.-
54	20	LF	NA	13-1.31	NA	NA	16" Steel Sleeve	$ 450.-	$ 9000.-
55	1	LS	NA	NA	801-8.4	541330	Prepare Water Pollution Control Program		$ 750.-
56	1	LS	NA	NA	800-2.15	561730	Erosion Control		$ 1000.-
57	215	LF	NA	NA	306-1.6	237110	Waterline Relocation	$ 100.-	$ 21500.-
58	205	LF	NA	NA	306-5.3	237110	Abandon Pipeline	$ 15.-	$ 3075.-
59	10	LF	NA	13-1.34	NA	NA	Trench Drain	$ 175.-	$ 1750.-
60	1	AL	NA	NA	700-1.2.1.3	237110	City Forces Work		$26,905
61	1	LS	NA	NA	9-3.4.1	NA	Mobilization		~~$40,000~~ PMH ~~$50,000~~ PMH
							ESTIMATED TOTAL BASE BID		~~$ 2,478,075.00~~ PMH ~~$ 2,571,925.~~ PMH

2,489,075.00

TOTAL BID PRICE FOR BID (Items 1 through 61 inclusive) amount written in words:

~~TWO MILLION FOUR PMH HUNDRED SEVENTY EIGHT PMH THOUSAND NINE HUNDRED TWENTY FIVE DOLLARS.~~ PMH

TWO MILLION FOUR HUNDRED EIGHTY NINE THOUSAND SEVENTY FIVE DOLLARS AND NO CENT

The Bid shall contain an acknowledgment of receipt of all addenda, the numbers of which shall be filled in on the Bid form. If an addendum or addenda has been issued by the City and not noted as being received by the Bidder, this proposal shall be rejected as being **non-responsive**. The following addenda have been received and are acknowledged in this bid: "A" & "B"

The names of all persons interested in the foregoing proposal as principals are as follows:

PAUL M. HENDERSON - PRESIDENT

MARILYN L. HENDERSON. V.P / SEC.

IMPORTANT NOTICE: If Bidder or other interested person is a corporation, state secretary, treasurer, and manager thereof; if a co-partnership, state true name of firm, also names of all individual co-partners composing firm; if Bidder or other interested person is an individual, state first and last names in full.

Bidder: PAUL M. HENDERSON

Title: PRESIDENT

Business Address: 1920 CORSAIR CT. #105 EL CAJON, CA. 92020

Place of Business: " " " " " " "

Place of Residence: 2403 PAUL DR. EL CAJON, CA. 92020

Signature:

NOTES:

A. The City shall determine the low Bid based on the Base Bid alone.
B. Prices and notations shall be in ink or typewritten. All corrections (which have been initiated by the Bidder using erasures, strike out, line out, or "white-out") shall be typed or written in with ink adjacent thereto, and shall be initialed in ink by the person signing the bid proposal.
C. Failure to initial all corrections made in the bidding documents shall cause the Bid to be rejected as **non-responsive** and ineligible for further consideration.
D. Blank spaces must be filled in, using figures. Bidder's failure to submit a price for any Bid item that requires the Bidder to submit a price shall render the Bid **non-responsive** and shall be cause for its rejection.
E. Unit prices shall be entered for all unit price items. Unit prices shall not exceed two (2) decimal places. If the Unit prices entered exceed two (2) decimal places, the City will only use the first two digits after the decimal points without rounding up or down.
F. All extensions of the unit prices bid will be subject to verification by the City. In the case of inconsistency or conflict between the product of the Quantity x Unit Price and the Extension, the product shall govern.
G. In the case of inconsistency or conflict, between the sums of the Extensions with the estimated total Bid, the sum of the Extensions shall govern.
H. Bids shall not contain any recapitulation of the Work. Conditional Bids will be rejected as being **non-responsive.** Alternative proposals will not be considered unless called for.
I. Pay Items designated as F are subject to the Caltrans Standard Specifications. See 9-1.015, "Final Pay Items."

LIST OF SUBCONTRACTORS

In accordance with the requirements provided in the "Subletting and Subcontracting Fair Practices Act", Division 2, Part 1, Chapter 4 of the Public Contract Code, the Bidder shall list below the name and address of each Subcontractor who will perform work, labor, render services or specially fabricates and installs a portion [type] of the work or improvement, in an amount in excess of 0.5% of the Contractor's total Bid. The Bidder shall also list below the portion of the work which will be done by each subcontractor under this Contract. The Contractor shall list only one Subcontractor for each portion of the Work. The **DOLLAR VALUE** of the total Bid to be performed shall be stated for all subcontractors listed. Failure to comply with this requirement shall result in the Bid being rejected as **non-responsive** and ineligible for award. The Bidder's attention is directed to the Special Provisions - General; Paragraph 2-3 Subcontracts, which stipulates the percent of the Work to be performed with the Bidders' own forces. The Bidder shall list all SLBE, ELBE, DBE, DVBE, MBE, WBE, OBE, SDB, WoSB, HUBZone, and SDVOSB Subcontractors that Bidders are seeking recognition towards achieving any mandatory, voluntary, or both subcontracting participation percentages.

NAME, ADDRESS AND TELEPHONE NUMBER OF SUBCONTRACTOR	CONSTRUCTOR OR DESIGNER	TYPE OF WORK	DOLLAR VALUE OF SUBCONTRACT	MBE, WBE, DBE, DVBE, OBE, ELBE, SLBE, SDB, WoSB, HUBZone, OR SDVOSB①	WHERE CERTIFIED②	CHECK IF JOINT VENTURE PARTNERSHIP
Name: TJ-LINE FENCE & RAILING CO., INC. Address: P.O. BOX 2637 City: RAMONA State: CA Zip: 92065 Phone: 760-789-0282	CONSTRUCTOR	RAILING	$251,180.00	DBE	CALTRANS	
Name: CREST EQUIPMENT Address: 161 SCOTTFORD DR. City: EL CAJON State: CA Zip: 92021 Phone: 619-444-5061	CONSTRUCTOR	CONCRETE, RAMPS FLATWORK, TRUCKER, PAVING, WALLS,	~~$33,441.25~~ PMH ~~$40,291.25~~ PMH $136,000.00	WBE	CALTRANS	
Name: HARRIS REBAR Address: 1505 E. MISSION BLVD. City: POMONA State: CA Zip: 91766 Phone: 909-397-7155	CONSTRUCTOR	REBAR	$199,512.00			

① As appropriate, Bidder shall identify Subcontractor as one of the following and shall include a valid proof of certification (except for OBE, SLBE and ELBE):

Certified Minority Business Enterprise	MBE	Certified Woman Business Enterprise	WBE
Certified Disadvantaged Business Enterprise	DBE	Certified Disabled Veteran Business Enterprise	DVBE
Other Business Enterprise	OBE	Certified Emerging Local Business Enterprise	ELBE
Certified Small Local Business Enterprise	SLBE	Small Disadvantaged Business	SDB
Woman-Owned Small Business	WoSB	HUBZone Business	HUBZone
Service-Disabled Veteran Owned Small Business	SDVOSB		

② As appropriate, Bidder shall indicate if Subcontractor is certified by:

City of San Diego	CITY	State of California Department of Transportation	CALTRANS
California Public Utilities Commission	CPUC	San Diego Regional Minority Supplier Diversity Council	SRMSDC
State of California's Department of General Services	CADoGS	City of Los Angeles	LA
State of California	CA	U.S. Small Business Administration	SBA

46.23 40

The Bidder will not receive any subcontracting participation percentages if the Bidder fails to submit the required proof of certification (except for OBE, SLBE and ELBE).

LIST OF SUBCONTRACTORS

In accordance with the requirements provided in the "Subletting and Subcontracting Fair Practices Act", Division 2, Part 1, Chapter 4 of the Public Contract Code, the Bidder shall list below the name and address of each Subcontractor who will perform work, labor, render services or specially fabricates and installs a portion [type] of the work or improvement, in an amount in excess of 0.5% of the Contractor's total Bid. The Bidder shall also list below the portion of the work which will be done by each subcontractor under this Contract. The Contractor shall list only one Subcontractor for each portion of the Work. The **DOLLAR VALUE** of the total Bid to be performed shall be stated for all subcontractors listed. Failure to comply with this requirement shall result in the Bid being rejected as **non-responsive** and ineligible for award. The Bidder's attention is directed to the Special Provisions - General; Paragraph 2-3 Subcontracts, which stipulates the percent of the Work to be performed with the Bidders' own forces. The Bidder shall list all SLBE, ELBE, DBE, DVBE, MBE, WBE, OBE, SDB, WoSB, HUBZone, and SDVOSB Subcontractors that Bidders are seeking recognition towards achieving any mandatory, voluntary, or both subcontracting participation percentages.

NAME, ADDRESS AND TELEPHONE NUMBER OF SUBCONTRACTOR	CONSTRUCTOR OR DESIGNER	TYPE OF WORK	DOLLAR VALUE OF SUBCONTRACT	MBE, WBE, DBE, DVBE, OBE, ELBE, SLBE, SDB, WoSB, HUBZone, OR SDVOSB①	WHERE CERTIFIED②	CHECK IF JOINT VENTURE PARTNERSHIP
Name: CURTIS DRILLING CO. Address: 2625 SO. SANTA FE AVE. City: SAN MARCOS State: CA Zip: 92069 Phone: 760-727-7550	CONSTRUCTOR	DRILLING	$121,646.00			
Name: FLAT IRON ELECTRICAL GROUP, INC. Address: 7911-A PINE AVE. City: CHINO State: CA Zip: 91708 Phone: 714-228-9631	CONSTRUCTOR	ELECTRICAL	$128,402.00			
Name: DYWIDAG SYSTEMS INTERNATIONAL Address: 2154 SOUTH ST. City: LONG BEACH State: CA Zip: 90805 Phone: 562-531-6161	CONSTRUCTOR	POST-TENSIONING	$39,741.00			

① As appropriate, Bidder shall identify Subcontractor as one of the following and shall include a valid proof of certification (except for OBE, SLBE and ELBE):

Certified Minority Business Enterprise	MBE	Certified Woman Business Enterprise	WBE
Certified Disadvantaged Business Enterprise	DBE	Certified Disabled Veteran Business Enterprise	DVBE
Other Business Enterprise	OBE	Certified Emerging Local Business Enterprise	ELBE
Certified Small Local Business Enterprise	SLBE	Small Disadvantaged Business	SDB
Woman-Owned Small Business	WoSB	HUBZone Business	HUBZone
Service-Disabled Veteran Owned Small Business	SDVOSB		

② As appropriate, Bidder shall indicate if Subcontractor is certified by:

City of San Diego	CITY	State of California Department of Transportation	CALTRANS
California Public Utilities Commission	CPUC	San Diego Regional Minority Supplier Diversity Council	SRMSDC
State of California's Department of General Services	CADoGS	City of Los Angeles	LA
State of California	CA	U.S. Small Business Administration	SBA

The Bidder will not receive any subcontracting participation percentages if the Bidder fails to submit the required proof of certification (except for OBE, SLBE and ELBE).

LIST OF SUBCONTRACTORS

In accordance with the requirements provided in the "Subletting and Subcontracting Fair Practices Act", Division 2, Part 1, Chapter 4 of the Public Contract Code, the Bidder shall list below the name and address of each Subcontractor who will perform work, labor, render services or specially fabricates and installs a portion [type] of the work or improvement, in an amount in excess of 0.5% of the Contractor's total Bid. The Bidder shall also list below the portion of the work which will be done by each subcontractor under this Contract. The Contractor shall list only one Subcontractor for each portion of the Work. The **DOLLAR VALUE** of the total Bid to be performed shall be stated for all subcontractors listed. Failure to comply with this requirement shall result in the Bid being rejected as **non-responsive** and ineligible for award. The Bidder's attention is directed to the Special Provisions - General; Paragraph 2-3 Subcontracts, which stipulates the percent of the Work to be performed with the Bidders' own forces. The Bidder shall list all SLBE, ELBE, DBE, DVBE, MBE, WBE, OBE, SDB, WoSB, HUBZone, and SDVOSB Subcontractors that Bidders are seeking recognition towards achieving any mandatory, voluntary, or both subcontracting participation percentages.

NAME, ADDRESS AND TELEPHONE NUMBER OF SUBCONTRACTOR	CONSTRUCTOR OR DESIGNER	TYPE OF WORK	DOLLAR VALUE OF SUBCONTRACT	MBE, WBE, DBE, DVBE, OBE, ELBE, SLBE, SDB, WoSB, HUBZone, OR SDVOSB①	WHERE CERTIFIED②	CHECK IF JOINT VENTURE PARTNERSHIP
Name: SPEC FORMLINERS, INC. Address: 530 E. DYER RD. City: SANTA ANA State: CA Zip: 92707 Phone: 714-429-9500	CONSTRUCTOR	FORM LINER	$51,084.00			
Name: CMJ ENTERPRISES, INC. Address: P.O. BOX 15727 City: SCOTTSDALE State: AZ Zip: 85267 Phone: 480-483-0985	CONSTRUCTOR	STAIN & ANTI GRAFFITI COATING	$47,688.00			
Name: DIVERSIFIED LANDSCAPE INC Address: 33801 WASHINGTON ST. City: WINCHESTER State: CA Zip: 92596 Phone: 951-926-7444	CONSTRUCTOR	LANDSCAPE	$130,278.00	WBE PMH		

① As appropriate, Bidder shall identify Subcontractor as one of the following and shall include a valid proof of certification (except for OBE, SLBE and ELBE):

Certified Minority Business Enterprise	MBE	Certified Woman Business Enterprise	WBE
Certified Disadvantaged Business Enterprise	DBE	Certified Disabled Veteran Business Enterprise	DVBE
Other Business Enterprise	OBE	Certified Emerging Local Business Enterprise	ELBE
Certified Small Local Business Enterprise	SLBE	Small Disadvantaged Business	SDB
Woman-Owned Small Business	WoSB	HUBZone Business	HUBZone
Service-Disabled Veteran Owned Small Business	SDVOSB		

② As appropriate, Bidder shall indicate if Subcontractor is certified by:

City of San Diego	CITY	State of California Department of Transportation	CALTRANS
California Public Utilities Commission	CPUC	San Diego Regional Minority Supplier Diversity Council	SRMSDC
State of California's Department of General Services	CADoGS	City of Los Angeles	LA
State of California	CA	U.S. Small Business Administration	SBA

The Bidder will not receive any subcontracting participation percentages if the Bidder fails to submit the required proof of certification (except for OBE, SLBE and ELBE).

LIST OF SUBCONTRACTORS

In accordance with the requirements provided in the "Subletting and Subcontracting Fair Practices Act", Division 2, Part 1, Chapter 4 of the Public Contract Code, the Bidder shall list below the name and address of each Subcontractor who will perform work, labor, render services or specially fabricates and installs a portion [type] of the work or improvement, in an amount in excess of 0.5% of the Contractor's total Bid. The Bidder shall also list below the portion of the work which will be done by each subcontractor under this Contract. The Contractor shall list only one Subcontractor for each portion of the Work. The **DOLLAR VALUE** of the total Bid to be performed shall be stated for all subcontractors listed. Failure to comply with this requirement shall result in the Bid being rejected as **non-responsive** and ineligible for award. The Bidder's attention is directed to the Special Provisions - General; Paragraph 2-3 Subcontracts, which stipulates the percent of the Work to be performed with the Bidders' own forces. The Bidder shall list all SLBE, ELBE, DBE, DVBE, MBE, WBE, OBE, SDB, WoSB, HUBZone, and SDVOSB Subcontractors that Bidders are seeking recognition towards achieving any mandatory, voluntary, or both subcontracting participation percentages.

NAME, ADDRESS AND TELEPHONE NUMBER OF SUBCONTRACTOR	CONSTRUCTOR OR DESIGNER	TYPE OF WORK	DOLLAR VALUE OF SUBCONTRACT	MBE, WBE, DBE, DVBE, OBE, ELBE, SLBE, SDB, WoSB, HUBZone, OR SDVOSB①	WHERE CERTIFIED②	CHECK IF JOINT VENTURE PARTNERSHIP
Name: HUDSON SAFE-T-LITE Address: 777 GABLE WAY City: EL CAJON State: CA Zip: 92022 Phone: 619-441-3644	CONSTRUCTOR	TRAFFIC CONTROL	~~$39,000~~ PMH $36,400.00	WBE	CALTRANS	
Name: ON TIME STRIPING Address: 8810-C JAMACHA BLVD, STE. 365 City: SPRING VALLEY State: CA Zip: 91977 Phone: 619-668-0328	CONSTRUCTOR	STRIPING	$8,908			
Name: Address: City: State: Zip: Phone:						

① As appropriate, Bidder shall identify Subcontractor as one of the following and shall include a valid proof of certification (except for OBE, SLBE and ELBE):

Certified Minority Business Enterprise	MBE	Certified Woman Business Enterprise	WBE
Certified Disadvantaged Business Enterprise	DBE	Certified Disabled Veteran Business Enterprise	DVBE
Other Business Enterprise	OBE	Certified Emerging Local Business Enterprise	ELBE
Certified Small Local Business Enterprise	SLBE	Small Disadvantaged Business	SDB
Woman-Owned Small Business	WoSB	HUBZone Business	HUBZone
Service-Disabled Veteran Owned Small Business	SDVOSB		

② As appropriate, Bidder shall indicate if Subcontractor is certified by:

City of San Diego	CITY	State of California Department of Transportation	CALTRANS
California Public Utilities Commission	CPUC	San Diego Regional Minority Supplier Diversity Council	SRMSDC
State of California's Department of General Services	CADoGS	City of Los Angeles	LA
State of California	CA	U.S. Small Business Administration	SBA

The Bidder will not receive any subcontracting participation percentages if the Bidder fails to submit the required proof of certification (except for OBE, SLBE and ELBE).

LIST OF SUBCONTRACTORS

In accordance with the requirements provided in the "Subletting and Subcontracting Fair Practices Act", Division 2, Part 1, Chapter 4 of the Public Contract Code, the Bidder shall list below the name and address of each Subcontractor who will perform work, labor, render services or specially fabricates and installs a portion [type] of the work or improvement, in an amount in excess of 0.5% of the Contractor's total Bid. The Bidder shall also list below the portion of the work which will be done by each subcontractor under this Contract. The Contractor shall list only one Subcontractor for each portion of the Work. The **DOLLAR VALUE** of the total Bid to be performed shall be stated for all subcontractors listed. Failure to comply with this requirement shall result in the Bid being rejected as **non-responsive** and ineligible for award. The Bidder's attention is directed to the Special Provisions - General; Paragraph 2-3 Subcontracts, which stipulates the percent of the Work to be performed with the Bidders' own forces. The Bidder shall list all SLBE, ELBE, DBE, DVBE, MBE, WBE, OBE, SDB, WoSB, HUBZone, and SDVOSB Subcontractors that Bidders are seeking recognition towards achieving any mandatory, voluntary, or both subcontracting participation percentages.

NAME, ADDRESS AND TELEPHONE NUMBER OF SUBCONTRACTOR	CONSTRUCTOR OR DESIGNER	TYPE OF WORK	DOLLAR VALUE OF SUBCONTRACT	MBE, WBE, DBE, DVBE, OBE, ELBE, SLBE, SDB, WoSB, HUBZone, OR SDVOSB①	WHERE CERTIFIED②	CHECK IF JOINT VENTURE PARTNERSHIP
Name:_____ Address:_____ City:_____ State:_____ Zip:_____ Phone:_____						
Name:_____ Address:_____ City:_____ State:_____ Zip:_____ Phone:_____						
Name:_____ Address:_____ City:_____ State:_____ Zip:_____ Phone:_____						

① As appropriate, Bidder shall identify Subcontractor as one of the following and shall include a valid proof of certification (except for OBE, SLBE and ELBE):

Certified Minority Business Enterprise	MBE	Certified Woman Business Enterprise	WBE
Certified Disadvantaged Business Enterprise	DBE	Certified Disabled Veteran Business Enterprise	DVBE
Other Business Enterprise	OBE	Certified Emerging Local Business Enterprise	ELBE
Certified Small Local Business Enterprise	SLBE	Small Disadvantaged Business	SDB
Woman-Owned Small Business	WoSB	HUBZone Business	HUBZone
Service-Disabled Veteran Owned Small Business	SDVOSB		

② As appropriate, Bidder shall indicate if Subcontractor is certified by:

City of San Diego	CITY	State of California Department of Transportation	CALTRANS
California Public Utilities Commission	CPUC	San Diego Regional Minority Supplier Diversity Council	SRMSDC
State of California's Department of General Services	CADoGS	City of Los Angeles	LA
State of California	CA	U.S. Small Business Administration	SBA

The Bidder will not receive any subcontracting participation percentages if the Bidder fails to submit the required proof of certification (except for OBE, SLBE and ELBE).

NAMED EQUIPMENT. .TERIAL SUPPLIER LIST

The Bidder seeking the recognition of equipment, materials, or supplies obtained from Suppliers towards achieving any mandatory, voluntary, or both subcontracting participation percentages shall list the Supplier(s) on the Named Equipment/Material Supplier List. The Named Equipment/Material Supplier List, at a minimum, shall have the name, locations (City) and the **DOLLAR VALUE** of the Suppliers. The Bidder will be credited up to 60% of the amount to be paid to the Suppliers for such materials and supplies unless vendor manufactures or substantially alters materials and supplies in which case 100% will be credited. The Bidder is to indicate (Yes/No) whether listed firm is a supplier or manufacturer. In calculating the subcontractor participation percentages, vendors/suppliers will receive 60% credit of the listed **DOLLAR VALUE**, whereas manufacturers will receive 100% credit. If no indication provided, listed firm will be credited at 60% of the listed dollar value for purposes of calculating the Subcontractor Participation Percentage, Suppliers will receive 60% credit of the listed **DOLLAR VALUE**, whereas manufacturers will receive 100% credit. If no indication provided, listed firm will be credited at 60% of the listed **DOLLAR VALUE** for purposes of calculating the subcontractor participation percentages.

NAME, ADDRESS AND TELEPHONE NUMBER OF VENDOR/SUPPLIER	MATERIALS OR SUPPLIES	DOLLAR VALUE OF MATERIAL OR SUPPLIES	SUPPLIER (Yes/No)	MANUFACTURER (Yes/No)	MBE, WBE, DBE, DVBE, OBE, ELBE, SLBE, SDB, WoSB, HUBZone, OR SDVOSB①	WHERE CERTIFIED②
Name:_____ Address:_____ City:_____ State:_____ Zip:_____ Phone:_____						
Name:_____ Address:_____ City:_____ State:_____ Zip:_____ Phone:_____						
Name:_____ Address:_____ City:_____ State:_____ Zip:_____ Phone:_____						

① As appropriate, Bidder shall identify Vendor/Supplier as one of the following and shall include a valid proof of certification (except for OBE, SLBE and ELBE):

Certified Minority Business Enterprise	MBE	Certified Woman Business Enterprise	WBE
Certified Disadvantaged Business Enterprise	DBE	Certified Disabled Veteran Business Enterprise	DVBE
Other Business Enterprise	OBE	Certified Emerging Local Business Enterprise	ELBE
Certified Small Local Business Enterprise	SLBE	Small Disadvantaged Business	SDB
Woman-Owned Small Business	WoSB	HUBZone Business	HUBZone
Service-Disabled Veteran Owned Small Business	SDVOSB		

② As appropriate, Bidder shall indicate if Vendor/Supplier is certified by:

City of San Diego	CITY	State of California Department of Transportation	CALTRANS
California Public Utilities Commission	CPUC	San Diego Regional Minority Supplier Diversity Council	SRMSDC
State of California's Department of General Services	CADoGS	City of Los Angeles	LA
State of California	CA	U.S. Small Business Administration	SBA

The Bidder will not receive any subcontracting participation percentages if the Bidder fails to submit the required proof of certification (except for OBE, SLBE and ELBE).

"FEDERAL-AID ID: HPLU 5004 (168) & DEMO 8L 5004"

TED WILLIAMS PARKWAY PEDESTRIAN OVERCROSSING AT SHOAL CREEK DRIVE

OWNER/APPLICANT

CITY OF SAN DIEGO
1222 FIRST AVENUE
SAN DIEGO, CA 92101

REFERENCE DRAWINGS

28580-D
23958-D
24084-D
23788-D
28432-D
28311-D

SITE ADDRESS

INTERSECTION OF TED WILLIAMS PARKWAY AND SHOAL CREEK DRIVE

TOPOGRAPHY SOURCE

BASED UPON A FIELD SURVEY PERFORMED BY CITY OF SAN DIEGO SURVEYING DIVISION ON AUGUST 30, 2007. WORK ORDER NO. 117880.

BENCHMARK

NEBP RANCHO CARMEL DRIVE AND SHOAL CREEK DRIVE, ELEV. 589.611 MSL. BASED ON NGVD 29 FEET AS SHOWN IN THE CITY OF SAN DIEGO BENCH BOOK.

BASIS OF BEARINGS/COORDINATES

THE BASIS OF BEARINGS FOR THIS PROJECT WAS DERIVED FROM A PREVIOUS STATIC GPS SURVEY USING GPS 501 AND GPS 502 AS SHOWN ON R. OF S. 14492 I.E. N43°42'32"W, 1712.693 NAD 83 FEET, ZONE 6 (EPOCH 91.35).

TOTAL DISTURBED AREA

TOTAL SITE DISTURBED AREA = 0.4 ACRES

ASSESSOR'S PARCEL NUMBERS

313-570-070 313-570-002
313-642-017 313-761-023
313-750-001

GRADING & GEOTECHNICAL SPECIFICATIONS

1. ALL GRADING SHALL BE DONE UNDER OBSERVATION AND TESTING BY A QUALIFIED CIVIL ENGINEER OR GEOTECHNICAL ENGINEER AND, IF REQUIRED, BOTH A QUALIFIED CIVIL ENGINEER OR GEOTECHNICAL ENGINEER AND AN ENGINEERING GEOLOGIST. ALL GRADING MUST BE PERFORMED IN ACCORDANCE WITH APPLICABLE CITY ORDINANCE AND THE RECOMMENDATIONS AND SPECIFICATIONS SET FORTH IN THE SOILS REPORT OR GEOLOGICAL/GEOTECHNICAL INVESTIGATION ENTITLED "FOUNDATION REPORT" FOR TED WILLIAMS PEDESTRIAN OVERCROSSING PREPARED BY GEOCON INCORPORATED, DATED: 04/07/2010.

2. ALL STRUCTURAL BACKFILL MATERIAL SHALL BE COMPACTED TO A MINIMUM OF 95% OF THE MAXIMUM DRY DENSITY AS DETERMINED BY THE MOST RECENT VERSION OF A.S.T.M. D-1557 OR AN APPROVED ALTERNATIVE STANDARD. ALL OTHER BACKFILL SHALL BE COMPACTED TO A MINIMUM 90% OF THE MAXIMUM DRY DENSITY.

3. AT THE COMPLETION OF THE GRADING OPERATIONS FOR THE EARTHWORK SHOWN ON THIS PLAN, AN AS-GRADED SOILS REPORT, OR IF REQUIRED, AN AS-GRADED SOILS AND GEOLOGICAL REPORT WILL BE PREPARED IN ACCORDANCE WITH THE MOST RECENT EDITION OF THE CITY OF SAN DIEGO TECHNICAL GUIDELINES FOR GEOTECHNICAL REPORTS. THE FINAL "AS-GRADED" GEOTECHNICAL REPORT WILL BE SUBMITTED TO THE FIELD ENGINEERING SECTION OF PUBLIC WORKS AND A SECOND COPY TO THE GEOLOGY SECTION OF DEVELOPMENT SERVICES WITHIN 15 DAYS OF THE COMPLETION OF GRADING. WHERE GEOLOGIC INSPECTION IS INDICATED IN THE PERMIT OR PROJECT PLANS, REPORTS OR SPECIFICATIONS, THE FINAL REPORT MUST ALSO BE REVIEWED AND SIGNED BY A CALIFORNIA CERTIFIED ENGINEERING GEOLOGIST.

4. IF THE GEOTECHNICAL CONSULTANT OF RECORD IS CHANGED FOR THE PROJECT, THE WORK SHALL BE STOPPED UNTIL THE REPLACEMENT HAS AGREED IN WRITING TO ACCEPT THE RESPONSIBILITY WITHIN THE AREA OF THEIR TECHNICAL COMPETENCE FOR APPROVAL UPON COMPLETION OF THE WORK. IT SHALL BE THE DUTY OF THE PERMITTEE TO NOTIFY THE CITY ENGINEER AND THE GEOLOGY SECTION OF DEVELOPMENT SERVICES IN WRITING OF SUCH CHANGE PRIOR TO THE RECOMMENCEMENT OF GRADING.

5. THESE GRADING PLANS HAVE BEEN REVIEWED BY THE UNDERSIGNED AND FOUND TO BE IN CONFORMANCE WITH THE RECOMMENDATIONS AND SPECIFICATIONS CONTAINED IN THE REFERENCED GEOTECHNICAL REPORT(S) PREPARED FOR THIS PROJECT.

SIGNATURE	NUMBER	EXPIRATION DATE	R.C.E. OR G.E.	DATE
	2775	06/30/2012	GE	April 5, 2011

GEOCON, INC. (858) 558-6900

CONSTRUCTION CHANGE TABLE

CHANGE	DATE	AFFECTED OR ADDED SHEET NUMBERS

NOTE: CONTRACTOR SHALL VERIFY ALL CONTROLLING FIELD DIMENSIONS BEFORE ORDERING OR FABRICATING ANY MATERIAL.

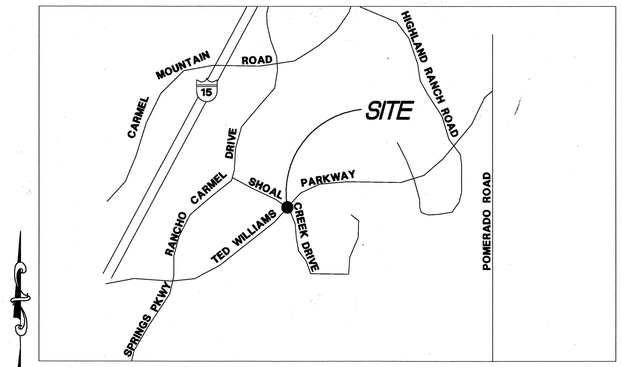

VICINITY MAP

NO SCALE

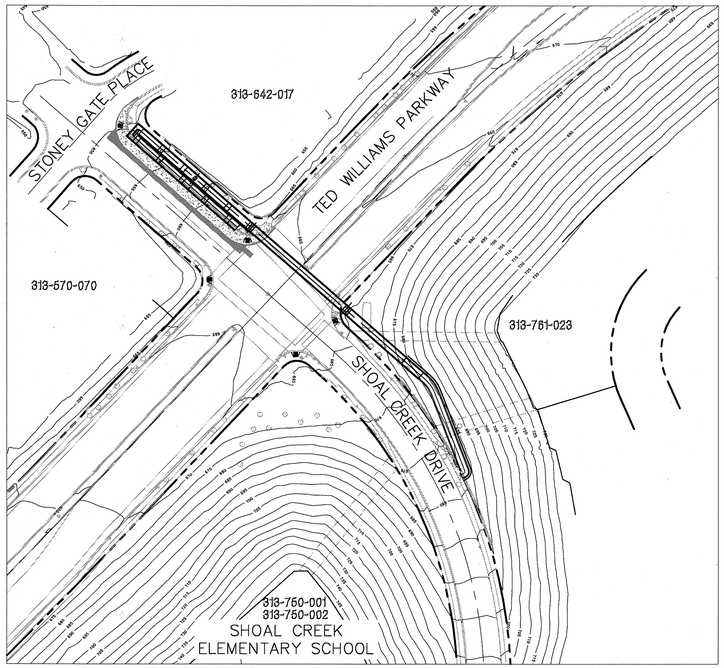

KEY MAP

1"=100'

DECLARATION OF RESPONSIBLE CHARGE

I HEREBY DECLARE THAT I AM THE ENGINEER OF WORK FOR THIS PROJECT, THAT I HAVE EXERCISED RESPONSIBLE CHARGE OVER THE DESIGN OF THE PROJECT AS DEFINED IN SECTION 6703 OF THE BUSINESS AND PROFESSIONS CODE, AND THAT THE DESIGN IS CONSISTENT WITH CURRENT STANDARDS. I UNDERSTAND THAT THE CHECK OF PROJECT DRAWINGS AND SPECIFICATIONS BY THE CITY OF SAN DIEGO IS CONFINED TO A REVIEW ONLY AND DOES NOT RELIEVE ME, AS ENGINEER OF WORK, OF MY RESPONSIBILITIES FOR PROJECT DESIGN.

JON M. COLLINS R.C.E. 62090 DATE 4/1/11

IMPORTANT NOTICE

SECTION 4216/4217 OF THE GOVERNMENT CODE REQUIRES A DIG ALERT IDENTIFICATION NUMBER BE ISSUED BEFORE A "PERMIT TO EXCAVATE" WILL BE VALID. FOR YOUR DIG ALERT I.D. NUMBER CALL UNDERGROUND SERVICE ALERT 1-800-227-2600 OR DIAL 811 TWO WORKING DAYS BEFORE YOU DIG.

Kimley-Horn and Associates, Inc.
401 B Street · Suite 600 · San Diego, Ca. · 92101
Tel: (619) 234-9411 · Fax: (619) 234-9433

PREPARED BY: TAMMIE C. MORENO R.C.E. 74417
REGISTRATION EXPIRES: 09/30/11 DATE: 4-4-11

STANDARD DRAWINGS

1. THE CITY OF SAN DIEGO STANDARD DRAWINGS, INCLUDING ALL REGIONAL STANDARD DRAWINGS, DOCUMENT NO. AEC1231063, FILED 12/31/2006.
2. STATE OF CALIFORNIA, DEPARTMENT OF TRANSPORTATION, THE 2006 U.S. CUSTOMARY UNIT STANDARD PLANS, CITY DOCUMENT NO. AEC0925061, FILED 09/25/2006.

STANDARD SPECIFICATIONS

1. STANDARD SPECIFICATION FOR PUBLIC WORKS CONSTRUCTION, 2009 EDITION (GREENBOOK), CITY DOCUMENT NO. PITS0504091, FILED 05/04/2009.
2. CITY OF SAN DIEGO SUPPLEMENTS (TO BE USED IN CONJUNCTION WITH GREENBOOK), CITY DOCUMENT NO. PITS050492, FILED 05/04/2009.
3. STATE OF CALIFORNIA, DEPARTMENT OF TRANSPORTATION, MANUAL OF UNIFORM TRAFFIC CONTROL DEVICES (MUTCD 2006) INCLUDING THE CALIFORNIA SUPPLEMENT AND THE CITY OF SAN DIEGO SIGN BOOK, 2006 EDITION, CITY DOCUMENT NO. AEC1231064, FILED 12/31/2006.
4. STATE OF CALIFORNIA, DEPARTMENT OF TRANSPORTATION, THE 2006 U.S. CUSTOMARY SPECIFICATIONS, CITY DOCUMENT NO. AEC0925062, FILED 09/25/2006.

LEGEND

PROPOSED IMPROVEMENTS

IMPROVEMENT	STANDARD DWGS.	SYMBOL
A.C. PAVEMENT (CLASS F)	SDG-113	
PARCEL BOUNDARY		
PROPOSED GRADING LIMITS OF WORK		
ELEVATION		675.50 FS
TYPE 'G' CURB AND GUTTER	G-2, SDG-100	
SAWCUT LINE		
CURB RAMP (SEE PLAN FOR TYPE)	SDG-132	
R/W		
PROPOSED WATER	SDW-100, WP-01, WP-02, WT-01	

EXISTING IMPROVEMENTS

ITEM	SYMBOL
ELECTRICAL LINE AND VAULT	E
FIRE HYDRANT	FH
SEWER LINE AND MANHOLE	S
STORM DRAIN LINE, INLET, CLEANOUT, AND MANHOLE	SD
TRAFFIC SIGNAL	SIG
SPOT ELEVATION	x 612.3
TELEPHONE LINE AND VAULT	T
WATER LINE, BACK FLOW PREVENTER AND IRRIGATION METER	BF
CHAIN LINK FENCE	X X X X
CURB AND GUTTER	
RETAINING WALL	
SIGNS	

SHEET INDEX

TITLE SHEET	SHEET 1
GENERAL NOTES AND TYPICAL SECTIONS	SHEET 2
DEMOLITION PLAN	SHEET 3
SHOAL CREEK PLAN AND PROFILE	SHEET 4
ROUGH GRADING PLAN	SHEET 5
GRADING PLAN	SHEET 6
TRAFFIC SIGNING AND STRIPING PLAN	SHEET 7
TRAFFIC SIGNAL INSTALLATION	SHEET 8
WATER POLLUTION CONTROL PLAN	SHEET 9
BRIDGE PLANS	SHEET 10-38
ELECTRICAL PLANS	SHEET 39-41
LANDSCAPE PLANS	SHEET 42-46
TRAFFIC CONTROL PLAN - LOCATION 1	SHEET T1
TRAFFIC CONTROL PLAN - LOCATION 2	SHEET T2
TRAFFIC CONTROL PLAN - SHOAL CREEK DR	SHEET T3

REGISTERED PROFESSIONAL ENGINEER
TAMMIE C. MORENO
No. 74417
Exp. 09/30/11
CIVIL
STATE OF CALIFORNIA

CONSTRUCTION SITE PRIORITY LOW
CITY CONTRACT
SPECIFICATION NO. 4885 CITY CONTRACT, CIP NO. S-00941

PLANS FOR THE CONSTRUCTION OF:

TED WILLIAMS PARKWAY PEDESTRIAN OVERCROSSING AT SHOAL CREEK DRIVE

TITLE SHEET

CITY OF SAN DIEGO, CALIFORNIA
ENGINEERING AND CAPITAL PROJECTS DEPARTMENT
SHEET 1 OF 46 SHEETS

W.O. NO. S-00941

A. Palaseyed FOR CITY ENGINEER 4/7/2011 DATE

DESCRIPTION	BY	APPROVED	DATE	FILMED
ORIGINAL	SWE			

A. PALASEYED SECTION HEAD
M. KOLL PROJECT MANAGER
NAD 83
292-1743 LAMBERT COORDINATES
CONTRACTOR DATE STARTED
INSPECTOR DATE COMPLETED
35490-1-D

Mar 31, 2011 - 12:18pm K:\SND_TPTO\095279013\Design\sheets\279013-01.dwg tammie.moreno

Development Services, City of San Diego 8/29/2005 11:42 AM BDR-IMP.dwg

GROUND WATER DISCHARGE NOTES

1. ALL GROUND WATER EXTRACTIONS AND SIMILAR WASTE DISCHARGES TO SURFACE WATERS NOT TRIBUTARY TO THE SAN DIEGO BAY ARE PROHIBITED UNTIL IT CAN BE DEMONSTRATED THAT THE OWNER HAS APPLIED AND OBTAINED AUTHORIZATION FROM THE STATE OF CALIFORNIA VIA AN OFFICIAL "ENROLLMENT LETTER" FROM THE REGIONAL WATER QUALITY CONTROL BOARD IN ACCORDANCE WITH THE TERMS, PROVISIONS AND CONDITIONS OF STATE ORDER NO 2001-96 NPDES CAG919002.

2. THE ESTIMATED MAXIMUM DISCHARGE RATES MUST NOT EXCEED THE LIMITS SET IN THE OFFICIAL "ENROLLMENT LETTER" FROM THE REGIONAL BOARD UNLESS PRIOR NOTIFICATION AND SUBSEQUENT AUTHORIZATION HAS BEEN OBTAINED, AND DISCHARGE OPERATIONS MODIFIED TO ACCOMMODATE THE INCREASED RATES.

3. ALL GROUND WATER EXTRACTIONS AND SIMILAR WASTE DISCHARGES TO SURFACE WATERS TRIBUTARY TO THE SAN DIEGO BAY ARE PROHIBITED UNTIL IT CAN BE DEMONSTRATED THAT THE OWNER HAS APPLIED AND OBTAINED AUTHORIZATION FROM THE STATE OF CALIFORNIA VIA AN OFFICIAL "ENROLLMENT LETTER" FROM THE REGIONAL WATER QUALITY CONTROL BOARD IN ACCORDANCE WITH THE TERMS, PROVISIONS AND CONDITIONS OF STATE ORDER NO 2009-2009-DWQ. NPDES NO. CAG919001.

WATER NOTES

1. ALL CONNECTIONS TO EXISTING WATER MAINS ARE TO BE DONE BY THE CITY'S WATER DEPARTMENT FOR WHICH THE FOLLOWING FEES WILL BE CHARGED. IF THE WATER CONNECTIONS ARE NOT READY TO BE MADE AND THE FEES PAID BEFORE NOVEMBER 29, 2010, THE CITY RESERVES THE RIGHT TO ADJUST THE FEES ACCORDING TO THE FEE SCHEDULE IN EFFECT AT THE TIME THE CONNECTIONS ARE MADE. IT IS THE RESPONSIBILITY OF THE CONTRACTOR TO EXPOSE THE EXISTING MAIN AT THE CONNECTION POINT AND TO INSTALL THE NEW MAIN AT THE ALIGNMENT AND GRADE WHICH WILL PERMIT THE CITY TO MAKE A "STRAIGHT-IN" CONNECTION WITHOUT USING MORE THAN 10 LINEAL FEET OF PIPE.

	COST	TYPE OF CONNECTION	SHEET
ITEM NO.1:	$4,612	TEMPORARY 12" CUT AND PLUG AND REMOVE 90 DEGREE BEND	4
ITEM NO.2:	$6,691	RECONNECT WITH 12" STRAIGHT IN CONNECTION	4
ITEM NO.3:	$6,352	TEMPORARY 12" CUT AND PLUG (WITH PREMIUM TIME)	4
ITEM NO.4:	$9,250	RECONNECT WITH 12" STRAIGHT IN CONNECTION (WITH PREMIUM TIME)	4

2. ALL VALVES WILL BE FLANGED TO CROSSES AND TEES. ONLY GATE VALVES SHALL BE USED IN FIRE HYDRANT INSTALLATIONS.

3. ALL BURIED DUCTILE AND GRAY CAST IRON PIPE, FITTINGS, VALVES AND APPURTENANCES SHALL BE COATED WITH A DIELECTRIC COATING: A LIQUID EPOXY COATING SYSTEM PER AWWA C-210 AT 24 MILS MINIMUM DRY FILM THICKNESS (MDFT), OR A COLD APPLIED THREE PART SYSTEM PETROLEUM WAX TAPE PER AWWA C-217, OR A 100% POLYURETHANE COATING OF 24 MILS MDFT SUITABLE FOR BURIED USE.

4. ALL PROPOSED WATER AND SEWER FACILITY INSTALLATIONS SHALL BE CONSTRUCTED WITH MATERIALS CURRENTLY LISTED IN THE MOST CURRENT EDITION OF THE CITY OF SAN DIEGO WATER UTILITIES DEPARTMENT APPROVED MATERIALS LIST AS REFERENCED IN THE STANDARD SPECIFICATIONS FOR PUBLIC WORKS CONSTRUCTION. RECENT REVISIONS INCLUDE BUT IS NOT LIMITED TO THE REQUIREMENT FOR POLYMER CONCRETE WATER METER BOXES INSTEAD OF THE STANDARD PRECAST WATER METER BOXES.

STANDARD SIGNS

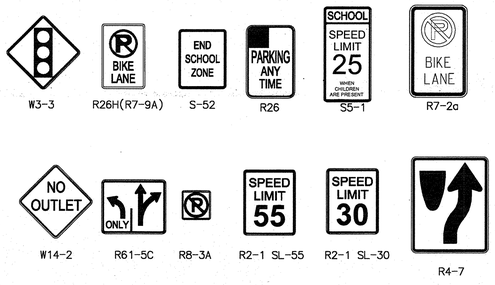

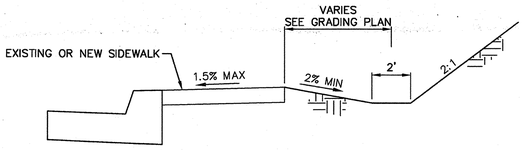

SWALE DETAIL
N.T.S.

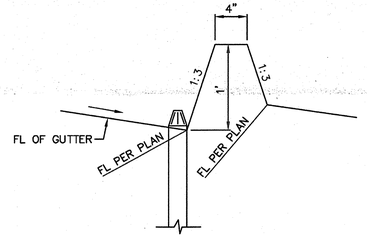

GUTTER RIDGE DETAIL
N.T.S.

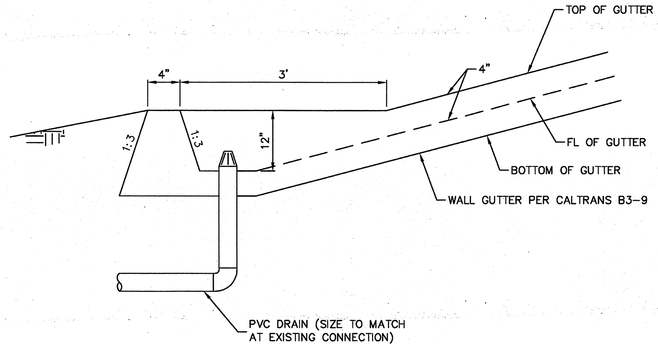

DRAIN OUTLET DETAIL AT ABUTMENT
N.T.S.

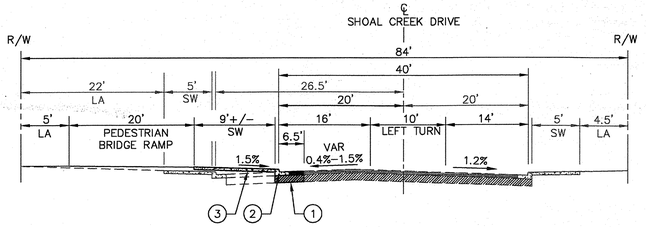

SHOAL CREEK DRIVE STA. 7+53.36 TO STA. 9+19.23
N.T.S.

CONSTRUCTION NOTES

1. SAWCUT AND MATCH EXISTING 7" CONCRETE WITH 4" AC (CLASS F)
2. TYPE "G" CURB AND GUTTER COMBINED PER STD DWG G-2.
3. 9' CONCRETE SIDEWALK PER STD DWG G-7, SDG-100.

STREET DATA TABLE

STREET NAME	CLASSIFICATION	DESIGN SPEED (MPH)	FUTURE ADT (VEHICLES)	R/W (FT)
TED WILLIAMS PARKWAY	PRIMARY ARTERIAL (6 LANES)	55	38,000	126
SHOAL CREEK DRIVE	2 LANE COLLECTOR	35	6,000	84

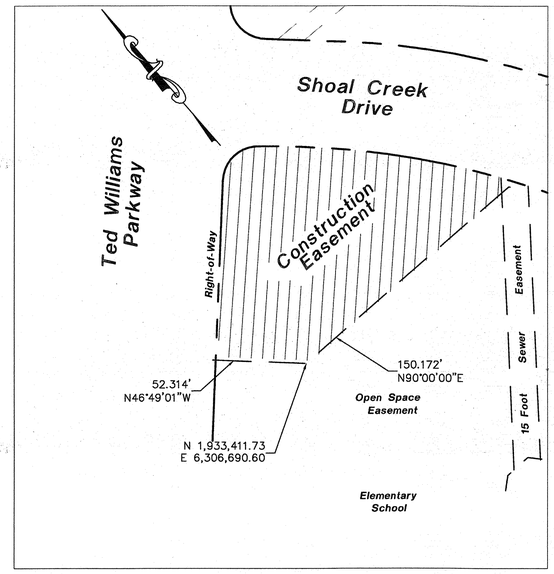

CONSTRUCTION EASEMENT
1"=40'

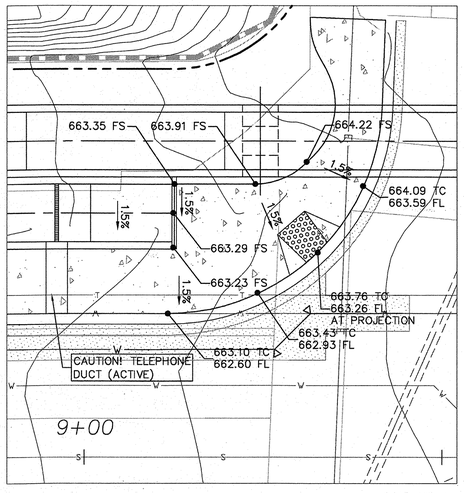

WEST RAMP GRADING
1"=10'

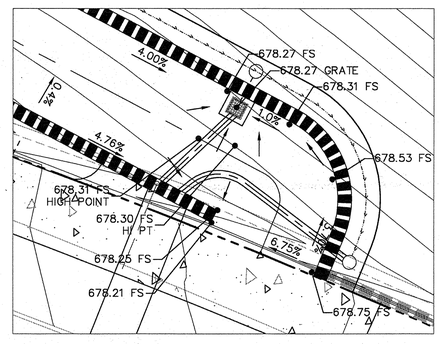

PRECISE GRADING
1"=5'

NOTE: CONTRACTOR SHALL VERIFY ALL CONTROLLING FIELD DIMENSIONS BEFORE ORDERING OR FABRICATING ANY MATERIAL.

IMPORTANT NOTICE
SECTION 4216/4217 OF THE GOVERNMENT CODE REQUIRES A DIG ALERT IDENTIFICATION NUMBER BE ISSUED BEFORE A "PERMIT TO EXCAVATE" WILL BE VALID. FOR YOUR DIG ALERT I.D. NUMBER CALL UNDERGROUND SERVICE ALERT 1-800-227-2600 OR DIAL 811 TWO WORKING DAYS BEFORE YOU DIG.

REGISTERED PROFESSIONAL ENGINEER TAMMIE C. MORENO No. 74417 Exp. 09/30/11 CIVIL STATE OF CALIFORNIA

Kimley-Horn and Associates, Inc.
401 B Street · Suite 600 · San Diego, Ca. · 92101
Tel: (619) 234-9411 · Fax: (619) 234-9433

DATE: 4-4-11
PREPARED BY: TAMMIE C. MORENO R.C.E. 74417
REGISTRATION EXPIRES: 09/30/11

CITY CONTRACT
SPECIFICATION NO. 4885 CITY CONTRACT, CIP NO. S-00941

PLANS FOR THE CONSTRUCTION OF:

TED WILLIAMS PARKWAY PEDESTRIAN OVERCROSSING AT SHOAL CREEK DRIVE

GENERAL NOTES AND TYPICAL SECTIONS

CITY OF SAN DIEGO, CALIFORNIA
ENGINEERING AND CAPITAL PROJECTS DEPARTMENT
SHEET 2 OF 46 SHEETS

W.O. NO. S-00941

A. Palasey 4/7/2011
FOR CITY ENGINEER DATE

A. PALASEYED
SECTION HEAD

M. KOLL
PROJECT MANAGER

DESCRIPTION	BY	APPROVED	DATE	FILMED
ORIGINAL	SWE			

NAD 83
292-1743
LAMBERT COORDINATES

CONTRACTOR _____ DATE STARTED _____
INSPECTOR _____ DATE COMPLETED _____

35490-2-D

Mar 31, 2011 - 12:19pm K:\SND_TPTO\095279013\Design\sheets\279013-02.dwg tammie.moreno

Development Services, City of San Diego 8/29/2005 11:42 AM BDR-IMP.dwg

NOTES:

1. MODIFY/REPAIR EXISTING IRRIGATION SYSTEM AS REQUIRED FOR CONSTRUCTION. FOR COMPLETE IRRIGATION COVERAGE, ALL IRRIGATION FACILITIES SHALL BE REPLACED, MODIFIED, OR EXTENDED IN KIND. (EXISTING IRRIGATION LINES NOT SHOWN)
2. CONTRACTOR SHALL FIELD LOCATE ALL EXISTING UTILITIES. UTILITY LOCATIONS SHOWN ARE APPROXIMATE AND BASED ON RESEARCH OF AVAILABLE INFORMATION.

LEGEND

- SAWCUT LINE
- REMOVE AC PAVEMENT, CURB, AND GUTTER
- REMOVE SIDEWALK
- FUTURE BRIDGE PIER OR ABUTMENT LOCATION
- REMOVE LANDSCAPE
- ABANDON WATERLINE

DEMOLITION NOTES

1. PROTECT EXISTING RETAINING WALL
2. PROTECT EXISTING MONUMENT SIGN
3. REMOVE EXISTING TREE
4. REMOVE AND RE-INSTALL SIGN PER STRIPING AND SIGNING PLAN
5. RELOCATE TRAFFIC SIGNAL POLES PER SIGNAL PLAN
6. RELOCATE TRAFFIC SIGNAL CABINET PER SIGNAL PLAN
7. RELOCATE IRRIGATION BOXES AND VALVES IF REQUIRED FOR BRIDGE PIER CONSTRUCTION
8. RELOCATE EXISTING ELECTRICAL IF REQUIRED FOR BRIDGE PIER CONSTRUCTION. DESIGN BY OTHERS
9. RELOCATE EXISTING PACIFIC BELL UTILITIES IF REQUIRED FOR BRIDGE PIER CONSTRUCTION. DESIGN BY OTHERS
10. REMOVE EXISTING RETAINING WALL AND GUTTER
11. DEMOLISH AND REMOVE EXISTING SIDEWALK
12. DEMOLISH AND REMOVE EXISTING CURB AND GUTTER
13. REMOVE EXISTING LANDSCAPE
14. REMOVE, BOX AND REINSTALL TREE OR REPLACE IN KIND
15. CONTRACTOR TO ABANDON EXISTING WATERLINE PER STD WP-03
16. PROTECT EXISTING TELEPHONE DUCT

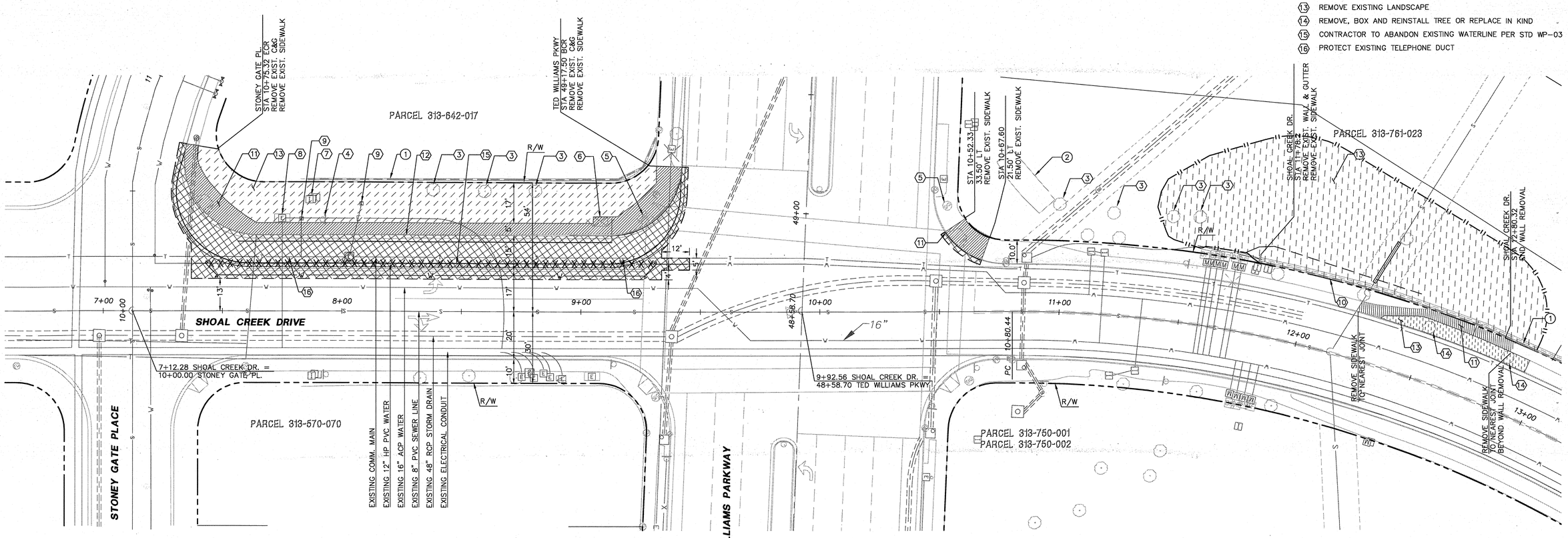

GRAPHIC SCALE
20' 0 10' 20' 40'

NOTE: CONTRACTOR SHALL VERIFY ALL CONTROLLING FIELD DIMENSIONS BEFORE ORDERING OR FABRICATING ANY MATERIAL.

IMPORTANT NOTICE
SECTION 4216/4217 OF THE GOVERNMENT CODE REQUIRES A DIG ALERT IDENTIFICATION NUMBER BE ISSUED BEFORE A "PERMIT TO EXCAVATE" WILL BE VALID. FOR YOUR DIG ALERT I.D. NUMBER CALL UNDERGROUND SERVICE ALERT 1-800-227-2600 OR DIAL 811 TWO WORKING DAYS BEFORE YOU DIG.

REGISTERED PROFESSIONAL ENGINEER
TAMMIE C. MORENO
No. 74417
Exp. 09/30/11
CIVIL
STATE OF CALIFORNIA

Kimley-Horn and Associates, Inc.
401 B Street · Suite 600 · San Diego, Ca. · 92101
Tel: (619) 234-9411 · Fax: (619) 234-9433

DATE: 4-4-11
PREPARED BY: TAMMIE C. MORENO R.C.E. 74417
REGISTRATION EXPIRES: 09/30/11

CITY CONTRACT
SPECIFICATION NO. 4885 CITY CONTRACT, CIP NO. S-00941

PLANS FOR THE CONSTRUCTION OF:

TED WILLIAMS PARKWAY PEDESTRIAN OVERCROSSING AT SHOAL CREEK DRIVE

DEMOLITION PLAN

CITY OF SAN DIEGO, CALIFORNIA
ENGINEERING AND CAPITAL PROJECTS DEPARTMENT
SHEET 3 OF 46 SHEETS

W.O. NO. S-00941

A. Palaseyed 4/7/2011
FOR CITY ENGINEER DATE

A. PALASEYED
SECTION HEAD

M. KOLL
PROJECT MANAGER

DESCRIPTION	BY	APPROVED	DATE	FILMED
ORIGINAL	SWE			

NAD 83
292-1743
LAMBERT COORDINATES

CONTRACTOR _____ DATE STARTED _____
INSPECTOR _____ DATE COMPLETED _____

35490-3-D

Mar 31, 2011 - 12:21pm K:\SND_TPTO\095279013\Design\sheets\279013-03.DWG tammie.moreno

Development Services, City of San Diego 8/29/2005 11:42 AM BDR-IMP.dwg

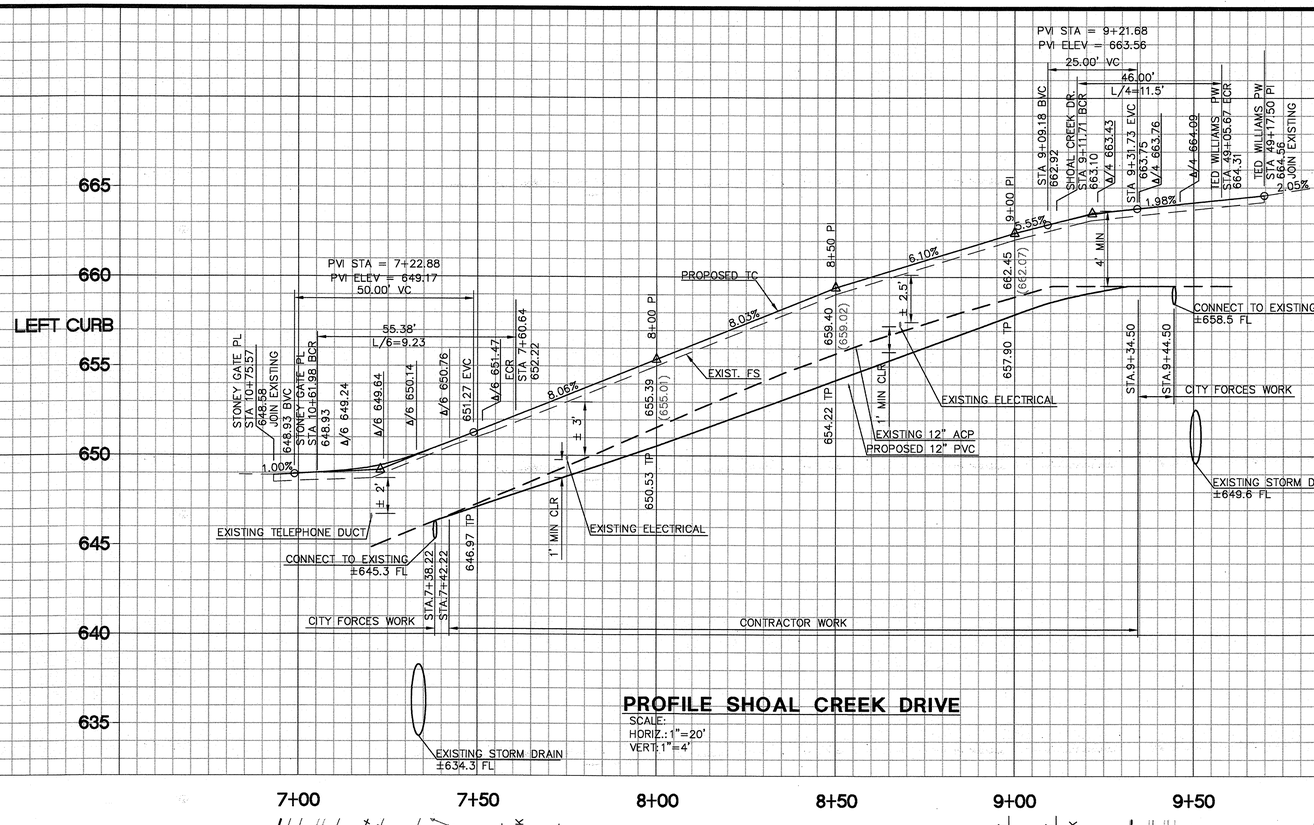

PROFILE SHOAL CREEK DRIVE

SCALE:
HORIZ.:1"=20'
VERT.1"=4'

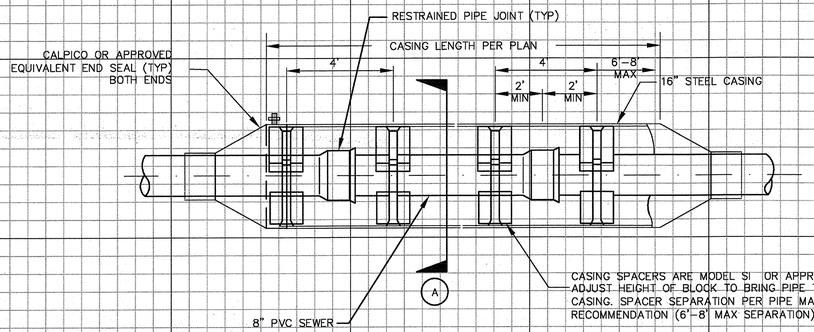

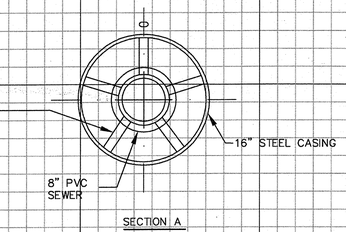

SEWER STEEL SLEEVE ENCASEMENT DETAIL

NOT TO SCALE

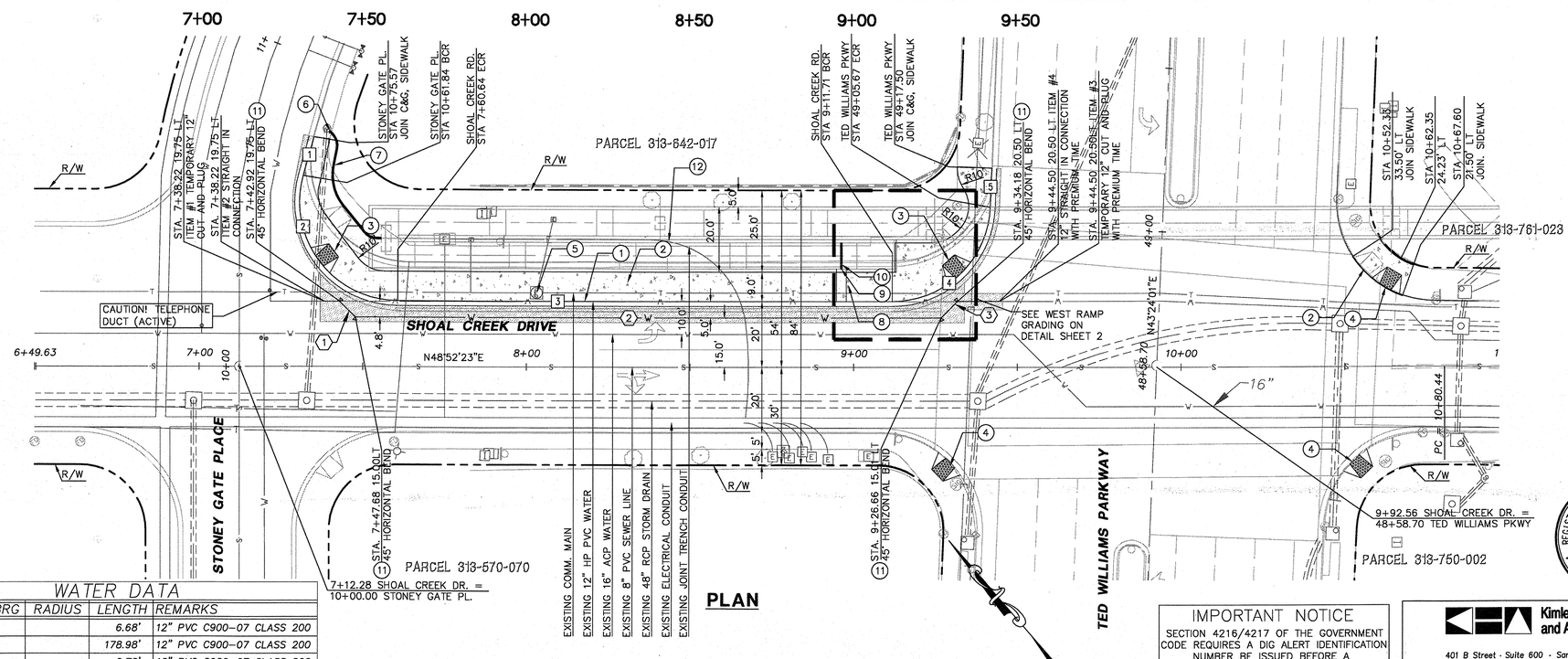

PLAN

GRAPHIC SCALE
20' 0 10' 20' 40'

CONSTRUCTION NOTES

1. TYPE "G" CURB AND GUTTER COMBINED PER STD DWG G-2
2. 9' CONCRETE SIDEWALK PER STD DWG G-7, SDG-100
3. TYPE "A" CURB RAMP PER STD DWG SDG-132*
4. TYPE "C2" CURB RAMP PER STD DWG SDG-135*
5. ADJUST MANHOLE TO FINISHED SURFACE BY OTHERS. CONTRACTOR TO COORDINATE WITH UTILITY COMPANY TO SCHEDULE WORK IN ADVANCE SO AS TO NOT IMPACT CONSTRUCTION.
6. CONNECT TO EXISTING MANHOLE AND GROUT ANNULAR VOID
7. 6" PVC
8. CURB OUTLET PER RSD D-25 WITHOUT MANHOLE
9. TRANSITION FROM PIPE TO CURB OUTLET WITHIN WALL AS SHOWN ON CALTRANS STD. DRW. B3-9
10. ACO TRENCH DRAIN OR APPROVED EQUIVALENT WITH ADA APPROVED GRATE
11. 45° HORIZONTAL BEND WITH THRUST BLOCK PER STD DWG WT-01 BY CONTRACTOR
12. JOINT TRENCH TO BE RELOCATED BY OTHERS

CURB DATA

NO.	DELTA OR BRG	RADIUS	LENGTH	REMARKS
1	N 56°53'23" E		12.22'	TYPE "G" C&G PER RSD G-2
2	Δ=105°45'55"	30.00'	55.38'	TYPE "G" C&G PER RSD G-2
3	N 48°52'32" W		151.07'	TYPE "G" C&G PER RSD G-2
4	Δ=87°52'15"	30.00'	46.01'	TYPE "G" C&G PER RSD G-2
5	N 43°15'13" E		11.97'	TYPE "G" C&G PER RSD G-2

WATER DATA

NO.	DELTA OR BRG	RADIUS	LENGTH	REMARKS
1	N 3°52'23" W		6.68'	12" PVC C900-07 CLASS 200
2	N 48°52'32" W		178.98'	12" PVC C900-07 CLASS 200
3	N 86°2'35" E		6.72'	12" PVC C900-07 CLASS 200

WATERLINE TRENCH PER STD DWG WP-02

NOTE: CONTRACTOR SHALL VERIFY ALL CONTROLLING FIELD DIMENSIONS BEFORE ORDERING OR FABRICATING ANY MATERIAL.

* THE REQUIRED DETECTABLE WARNING (TRUNCATED DOMES) ON CURB RAMPS ARE TO COMPLY WITH THE CITY STANDARDS (SDG-130) AND SPECIFICATIONS AND SHALL BE STAINLESS STEEL (MINIMUM 36"X48").

IMPORTANT NOTICE

SECTION 4216/4217 OF THE GOVERNMENT CODE REQUIRES A DIG ALERT IDENTIFICATION NUMBER BE ISSUED BEFORE A "PERMIT TO EXCAVATE" WILL BE VALID. FOR YOUR DIG ALERT I.D. NUMBER CALL UNDERGROUND SERVICE ALERT 1-800-227-2600 OR DIAL 811 TWO WORKING DAYS BEFORE YOU DIG.

REGISTERED PROFESSIONAL ENGINEER
TAMMIE C. MORENO
No. 74417
Exp. 09/30/11
CIVIL
STATE OF CALIFORNIA

Kimley-Horn and Associates, Inc.
401 B Street · Suite 600 · San Diego, Ca. · 92101
Tel: (619) 234-9411 · Fax: (619) 234-9433
DATE: 4-4-11
PREPARED BY: TAMMIE C. MORENO R.C.E. 74417
REGISTRATION EXPIRES: 09/30/11

CITY CONTRACT

SPECIFICATION NO. 4885 CITY CONTRACT, CIP NO. S-00941

PLANS FOR THE CONSTRUCTION OF:

TED WILLIAMS PARKWAY PEDESTRIAN OVERCROSSING AT SHOAL CREEK DRIVE

SHOAL CREEK PLAN AND PROFILE

CITY OF SAN DIEGO, CALIFORNIA
ENGINEERING AND CAPITAL PROJECTS DEPARTMENT
SHEET 4 OF 46 SHEETS

W.O. NO. S-00941

A. PALASEYED FOR CITY ENGINEER 4/7/2011 DATE

A. PALASEYED, SECTION HEAD
M. KOLL, PROJECT MANAGER

DESCRIPTION	BY	APPROVED	DATE	FILMED
ORIGINAL	SWE			

NAD 83
292-1743
LAMBERT COORDINATES

CONTRACTOR _____ DATE STARTED _____
INSPECTOR _____ DATE COMPLETED _____

35490-4-D

Mar 31, 2011 - 12:21pm K:\SND_TPTO\09527903\Design\sheets\v27903-04.dwg tammie.moreno

velopment Services, City of San Diego 8/29/2005 11:42 AM BDR-IMP.dwg

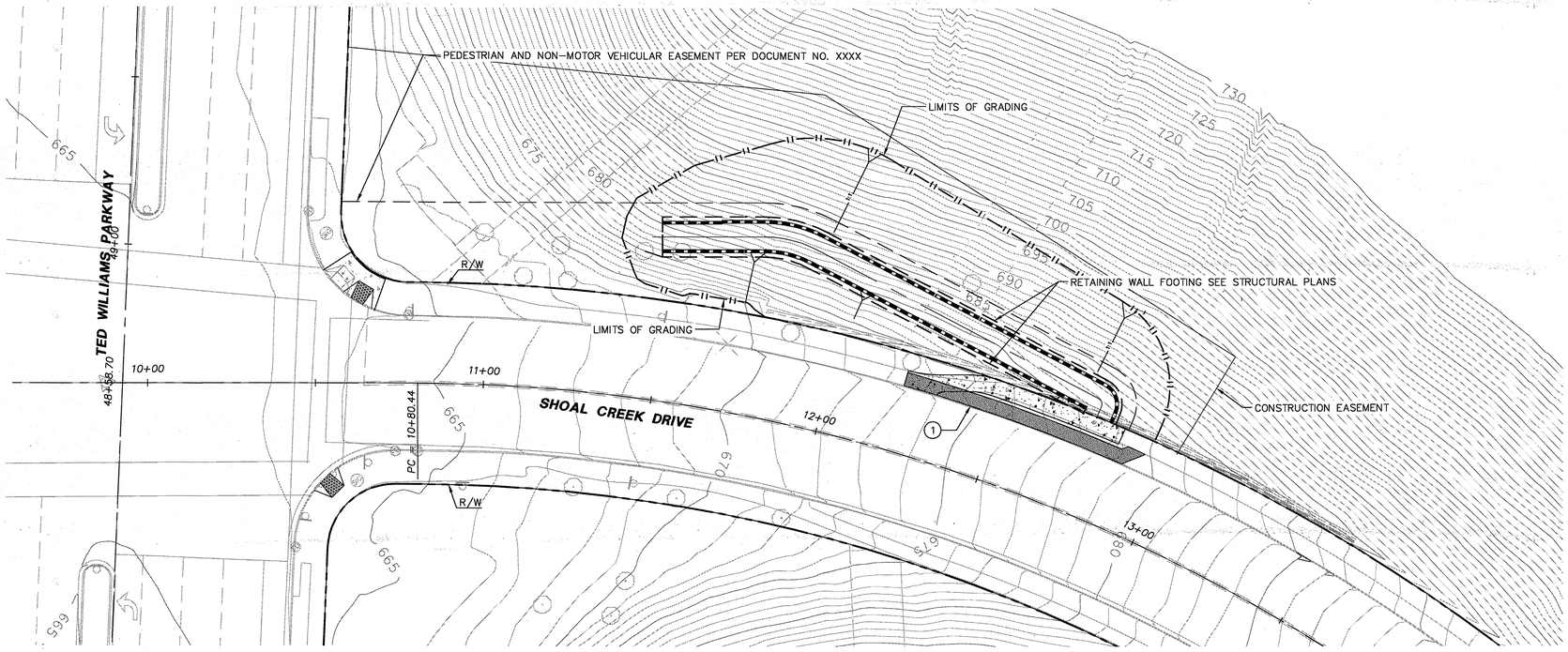

GRADING NOTES

1. GRADING AS SHOWN ON THESE PLANS SHALL BE IN CONFORMANCE WITH CURRENT STANDARD SPECIFICATIONS AND CHAPTER 14, ARTICLE 2, DIVISION 1 OF THE SAN DIEGO MUNICIPAL CODE, 2000 EDITION.
2. THE SOILS REPORT PREPARED BY GEOCON DATED APRIL 7, 2010 AND ALL SUPPLEMENTS THEREOF ARE INCORPORATED AND MADE PART OF THE PLAN.
3. ALL FILLS SHALL BE COMPACTED TO 95% OF MAXIMUM DENSITY. A COMPACTION REPORT, SHALL BE SUBMITTED TO THE FIELD ENGINEER PRIOR TO THE ROUGH GRADING INSPECTION FOR ALL FILLS EXCEEDING ONE FOOT IN DEPTH. THE COMPACTION REPORT SHALL INCLUDE A STATEMENT THAT THE GEOTECHNICAL ENGINEERING AND ENGINEERING GEOLOGIC ASPECTS OF THE GRADING HAVE BEEN INSPECTED AND ARE IN COMPLIANCE WITH THE APPLICABLE CONDITIONS OF THE GRADING PERMIT, THE GEOTECHNICAL ENGINEER'S AND ENGINEERING GEOLOGIST'S RECOMMENDATIONS. THE COMPACTION REPORT SHALL BE REVIEWED AND APPROVED BY THE FIELD ENGINEER PRIOR TO THE ROUGH GRADING APPROVAL.
4. ALL SLOPES SHALL BE CONTOUR-GRADED SO AS TO ROUND CORNERS AND TO BLEND MANUFACTURED SLOPES INTO ADJACENT NATURAL SLOPES.

CONSTRUCTION NOTES

(1) CONSTRUCT TEMPORARY 4' ASPHALT SIDEWALK

LEGEND

LIMITS OF GRADING

TEMPORARY AC PAVEMENT SIDEWALK

GRAPHIC SCALE
20' 0 10' 20' 40'

NOTE: CONTRACTOR SHALL VERIFY ALL CONTROLLING FIELD DIMENSIONS BEFORE ORDERING OR FABRICATING ANY MATERIAL.

IMPORTANT NOTICE
SECTION 4216/4217 OF THE GOVERNMENT CODE REQUIRES A DIG ALERT IDENTIFICATION NUMBER BE ISSUED BEFORE A "PERMIT TO EXCAVATE" WILL BE VALID. FOR YOUR DIG ALERT I.D. NUMBER CALL UNDERGROUND SERVICE ALERT 1-800-227-2600 OR DIAL 811 TWO WORKING DAYS BEFORE YOU DIG.

REGISTERED PROFESSIONAL ENGINEER
TAMMIE C. MORENO
No. 74417
Exp. 09/30/11
CIVIL
STATE OF CALIFORNIA

Kimley-Horn and Associates, Inc.
401 B Street · Suite 600 · San Diego, Ca. · 92101
Tel: (619) 234-9411 · Fax: (619) 234-9433
DATE: 4-4-11
PREPARED BY: TAMMIE C. MORENO R.C.E. 74417
REGISTRATION EXPIRES: 09/30/11

CITY CONTRACT

SPECIFICATION NO. 4885 CITY CONTRACT, CIP NO. S-00941

PLANS FOR THE CONSTRUCTION OF:

TED WILLIAMS PARKWAY PEDESTRIAN OVERCROSSING AT SHOAL CREEK DRIVE

ROUGH GRADING PLAN

CITY OF SAN DIEGO, CALIFORNIA
ENGINEERING AND CAPITAL PROJECTS DEPARTMENT
SHEET 5 OF 46 SHEETS

W.O. NO. S-00941

A. Palaseyed 4/7/2011
FOR CITY ENGINEER DATE

A. PALASEYED
SECTION HEAD

M. KOLL
PROJECT MANAGER

DESCRIPTION	BY	APPROVED	DATE	FILMED
ORIGINAL	SWE			

NAD 83
292-1743
LAMBERT COORDINATES

CONTRACTOR _____ DATE STARTED _____
INSPECTOR _____ DATE COMPLETED _____

35490-5-D

Mar 31, 2011 - 12:21pm K:\SND_TPTO\095279013\Design\sheets\279013-05.dwg tammie.moreno

Development Services, City of San Diego 8/29/2005 11:42 AM BDR-IMP.dwg

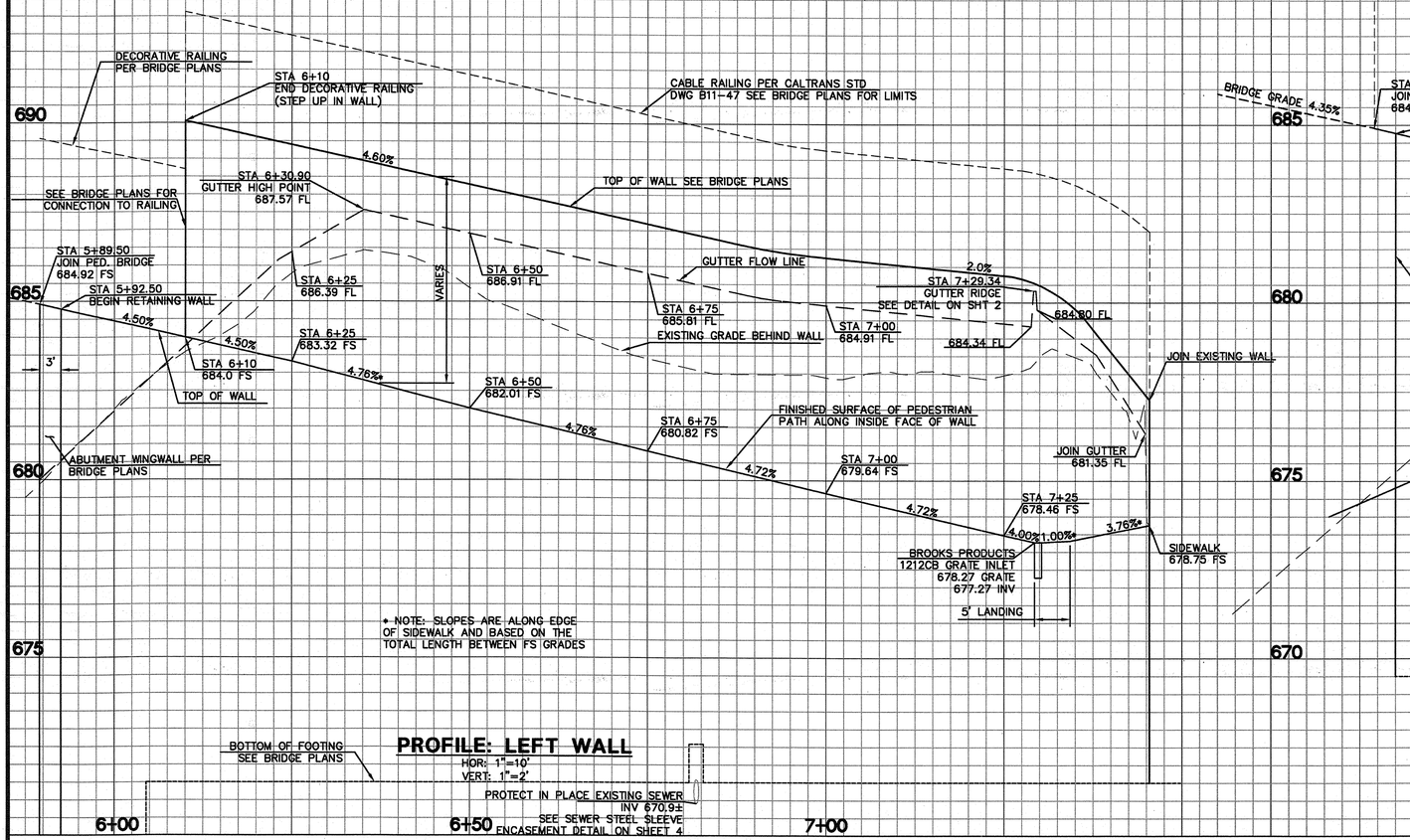

PROFILE: LEFT WALL

HOR: 1"=10'
VERT: 1"=2'

PROFILE: RIGHT WALL

HOR: 1"=10'
VERT: 1"=2'

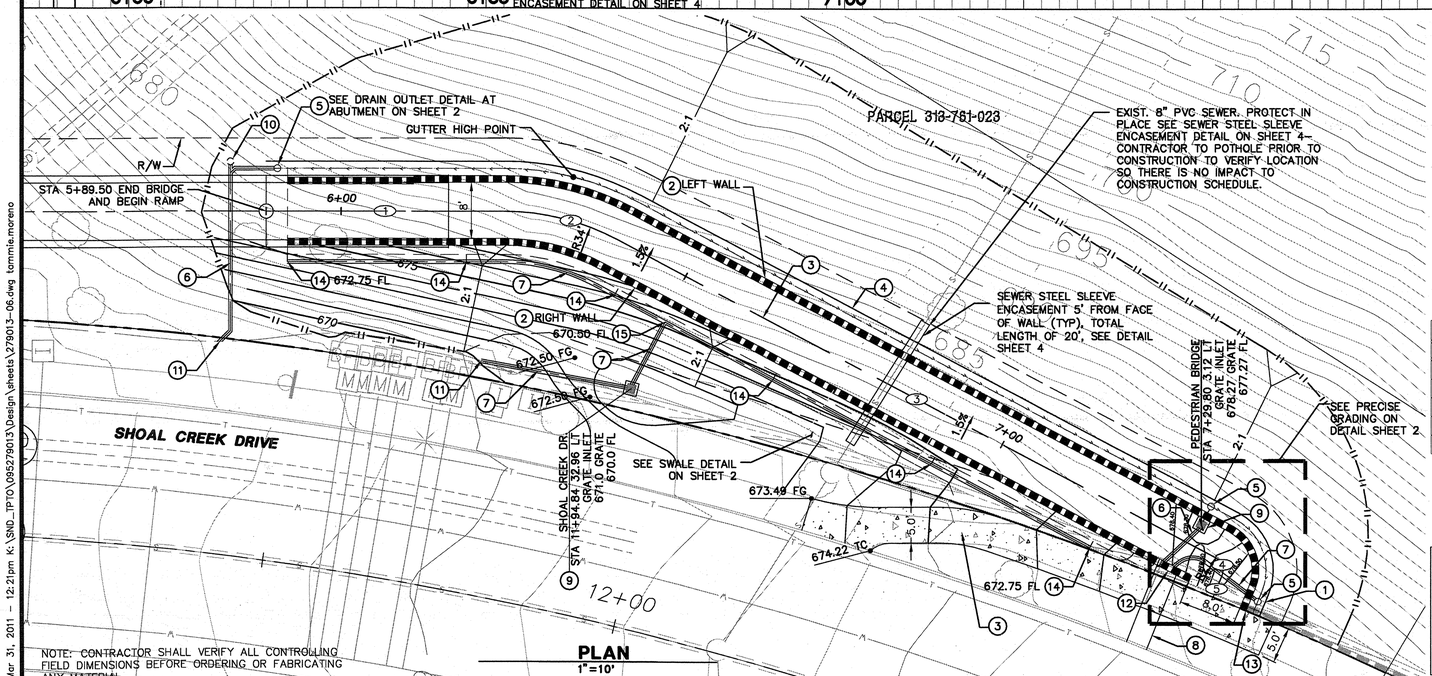

NOTE: CONTRACTOR SHALL VERIFY ALL CONTROLLING FIELD DIMENSIONS BEFORE ORDERING OR FABRICATING ANY MATERIAL.

GRADING NOTES

1. GRADING AS SHOWN ON THESE PLANS SHALL BE IN CONFORMANCE WITH CURRENT STANDARD SPECIFICATIONS AND CHAPTER 14, ARTICLE 2, DIVISION 1 OF THE SAN DIEGO MUNICIPAL CODE, 2000 EDITION.
2. THE SOILS REPORT PREPARED BY GEOCON DATED 04/07/2010 AND ALL SUPPLEMENTS THEREOF ARE INCORPORATED AND MADE PART OF THE PLAN.
3. ALL SLOPES SHALL BE CONTOUR-GRADED SO AS TO ROUND CORNERS AND TO BLEND MANUFACTURED SLOPES INTO ADJACENT NATURAL SLOPES.

CONSTRUCTION NOTES

1. JOIN TO EXISTING GUTTER
2. CONSTRUCT REINFORCED CONCRETE RETAINING WALL PER BRIDGE SHEET "ABUTMENT 6 LAYOUT 2 OF 2". INSTALL SAFETY RAILING ON LEFT WALL

CENTERLINE DATA				
NO.	DELTA OR BRG	RADIUS	LENGTH	REMARKS
1	N 48°52'22" W		33.26'	
2	Δ=27°51'50"	34.00'	16.53'	
3	N 21°0'32" W		94.38'	
4	Δ=84°20'2"	2.00'	2.94'	
5	N 63°19'30" E		3.29'	

GRAPHIC SCALE
10' 0 5' 10' 20'

CONSTRUCTION NOTES

3. CONCRETE SIDEWALK PER BRIDGE PLANS "ABUTMENT DETAILS 1"
4. DRAINAGE GUTTER PER STD. CALTRANS STANDARD DRAWING B3-9
5. 4" PVC LANDSCAPE GRATE
6. 6" PVC
7. PVC, SIZE TO MATCH EXISTING
8. CURB OUTLET PER RSD D-25 WITHOUT MANHOLE
9. BROOKS PRODUCTS GRATE INLET 1212CB
10. CLEANOUT PER RSD SDS-102
11. CONNECT TO EXISTING PVC
12. TRANSITION FROM PIPE TO CURB OUTLET WITHIN WALL AS SHOWN ON CALTRANS STD. DRW. B3-9
13. CONNECT PROPOSED RETAINING WALL TO EXISTING CMU WALL PER CALTRANS STD. DRW. BO-1 DTL. 1-4
14. CONNECT WEEP HOLE DRAINS TO 6"PVC WITH 6"x4" PVC TEE, SEE ABUTMENT DETAILS FOR SPACING OF WEEP HOLE DRAINS
15. 6" PVC TEE

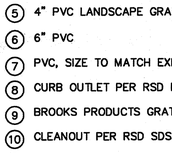

IMPORTANT NOTICE

SECTION 4216/4217 OF THE GOVERNMENT CODE REQUIRES A DIG ALERT IDENTIFICATION NUMBER BE ISSUED BEFORE A "PERMIT TO EXCAVATE" WILL BE VALID. FOR YOUR DIG ALERT I.D. NUMBER CALL UNDERGROUND SERVICE ALERT 1-800-227-2600 OR DIAL 811 TWO WORKING DAYS BEFORE YOU DIG.

REGISTERED PROFESSIONAL ENGINEER TAMMIE C. MORENO No. 74417 Exp. 09/30/11 CIVIL STATE OF CALIFORNIA

Kimley-Horn and Associates, Inc.
401 B Street · Suite 600 · San Diego, Ca. · 92101
Tel: (619) 234-9411 · Fax: (619) 234-9433

DATE: 4-4-11
PREPARED BY: TAMMIE C. MORENO R.C.E. 74417
REGISTRATION EXPIRES: 09/30/11

CITY CONTRACT

SPECIFICATION NO. 4885 CITY CONTRACT, CIP NO. S-00941

PLANS FOR THE CONSTRUCTION OF:

TED WILLIAMS PARKWAY PEDESTRIAN OVERCROSSING AT SHOAL CREEK DRIVE

GRADING PLAN

CITY OF SAN DIEGO, CALIFORNIA
ENGINEERING AND CAPITAL PROJECTS DEPARTMENT
SHEET 6 OF 46 SHEETS

W.O. NO. S-00941

A. Palaseyed 4/7/2011
FOR CITY ENGINEER DATE

A. PALASEYED
SECTION HEAD

M. KOLL
PROJECT MANAGER

DESCRIPTION	BY	APPROVED	DATE	FILED
ORIGINAL	SWE			

NAD 83
292-1743
LAMBERT COORDINATES

CONTRACTOR _____ DATE STARTED _____
INSPECTOR _____ DATE COMPLETED _____

35490-6-D

Mar 31, 2011 - 12:21pm K:\SND_TP\O\95279013\Design\sheets\279013-06.dwg tammie.moreno

Development Services, City of San Diego 8/29/2005 11:42 AM BDR-IMP.dwg

STRIPING AND SIGNING GENERAL NOTES

1) INSTALLATION OF ALL STRIPING, SIGNS AND PAVEMENT MARKERS SHALL BE THE RESPONSIBILITY OF THE CONTRACTOR.

2) ALL STRIPING AND SIGNING SHALL CONFORM TO THE MOST RECENTLY ADOPTED EDITION OF THE FOLLOWING MANUALS:

- THE MUTCD (MANUAL OF UNIFORM TRAFFIC CONTROL DEVICES) 2003 EDITION, INCLUDING THE CALIFORNIA SUPPLEMENT AND THE CITY OF SAN DIEGO DOCUMENT NO. AE 516051.
- CALTRANS STANDARD SPECIFICATIONS.
- STANDARD SPECIFICATIONS FOR PUBLIC WORKS CONSTRUCTION, 2003 EDITION, INCLUDING THE REGIONAL AND CITY OF SAN DIEGO SUPPLEMENTAL AMENDMENTS, DOCUMENT NO. AEC 701041, FILED JULY 1ST, 2004.

3) ALL SIGNING AND STRIPING IS SUBJECT TO THE APPROVAL OF THE CITY ENGINEER PRIOR TO INSTALLATION AND/OR REMOVAL.

4) THE CONTRACTOR SHALL REMOVE ALL CONFLICTING STRIPING, PAVEMENT MARKINGS AND LEGENDS BY SANDBLASTING AND/OR GRINDING WITH THE SEAL. ANY DEBRIS SHALL BE PROMPTLY REMOVED BY THE CONTRACTOR.

5) SIGN POSTS SHALL BE INSTALLED WITH SQUARE PERFORATED STEEL TUBING WITH A BREAKAWAY BASE PER CITY OF SAN DIEGO STANDARD DRAWING, M-45.

6) ALL RAISED MEDIAN NOSES SHALL BE PAINTED YELLOW.

7) ALL SIGNS SHOWN ON THE STRIPING AND SIGNING PLANS SHALL BE NEW SIGNS PROVIDED AND INSTALLED BY THE CONTRACTOR, EXCEPT FOR EXISTING SIGNS SPECIFICALLY INDICATED TO BE RELOCATED OR TO REMAIN.

8) STRIPED CROSSWALKS SHALL HAVE AN INSIDE DIMENSION OF 10 FEET UNLESS INDICATED OTHERWISE.

9) ALL LIMIT LINES/STOP LINES, CROSSWALK LINES, PAVEMENT LEGENDS, AND ARROWS (EXCEPT WITHIN BIKE LANES) SHALL BE THERMOPLASTIC.

10) THE CONTRACTOR SHALL NOTIFY THE CITY TRAFFIC ENGINEER AT (858) 495-4741 A MINIMUM OF FIVE (5) WORKING DAYS PRIOR TO AND UPON COMPLETION OF STRIPING AND SIGNING.

SIGNING AND STRIPING LEGEND

(22) INSTALL 4" WIDE DOUBLE YELLOW LEFT EDGE LINE WITH MARKER PER MUTCD CALIFORNIA SUPPLEMENT DETAIL 22.

(38) INSTALL CHANNELIZING LINE WITH PAVEMENT MARKERS PER CALTRANS DETAIL 38.

[PM] PAVEMENT MARKING

[SB] SANDBLAST

[RS] REMOVE AND SALVAGE

[FA] FOUNDATION TO BE ABANDONED

CALTRANS STD. TYPE IV ARROW.

(##) EXISTING LANE WIDTHS, FT.

PROPOSED LANE WIDTHS, FT.

CONSTRUCTION NOTES:

[1] INSTALL RED CURB

[2] REMOVE EXISTING YELLOW CROSSWALK

[3] INSTALL 10' THERMOPLASTIC WHITE CROSSWALK

[4] INSTALL 12" THERMOPLASTIC LIMIT LINE

[5 PM] INSTALL LEFT TURN ARROW

[6] SANDBLAST EXISTING LIMIT LINE AND EXTEND STRIPING TO NEW CROSSWALK.

[7] INSTALL DOUBLE YELLOW FLAREAT MEDIAN NOSE TO THE CROSSWALK OR LIMIT LINE.

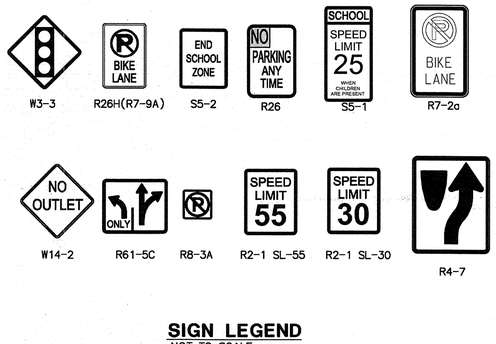

SIGN LEGEND
NOT TO SCALE

NOTE: CONTRACTOR SHALL VERIFY ALL CONTROLLING FIELD DIMENSIONS BEFORE ORDERING OR FABRICATING ANY MATERIAL.

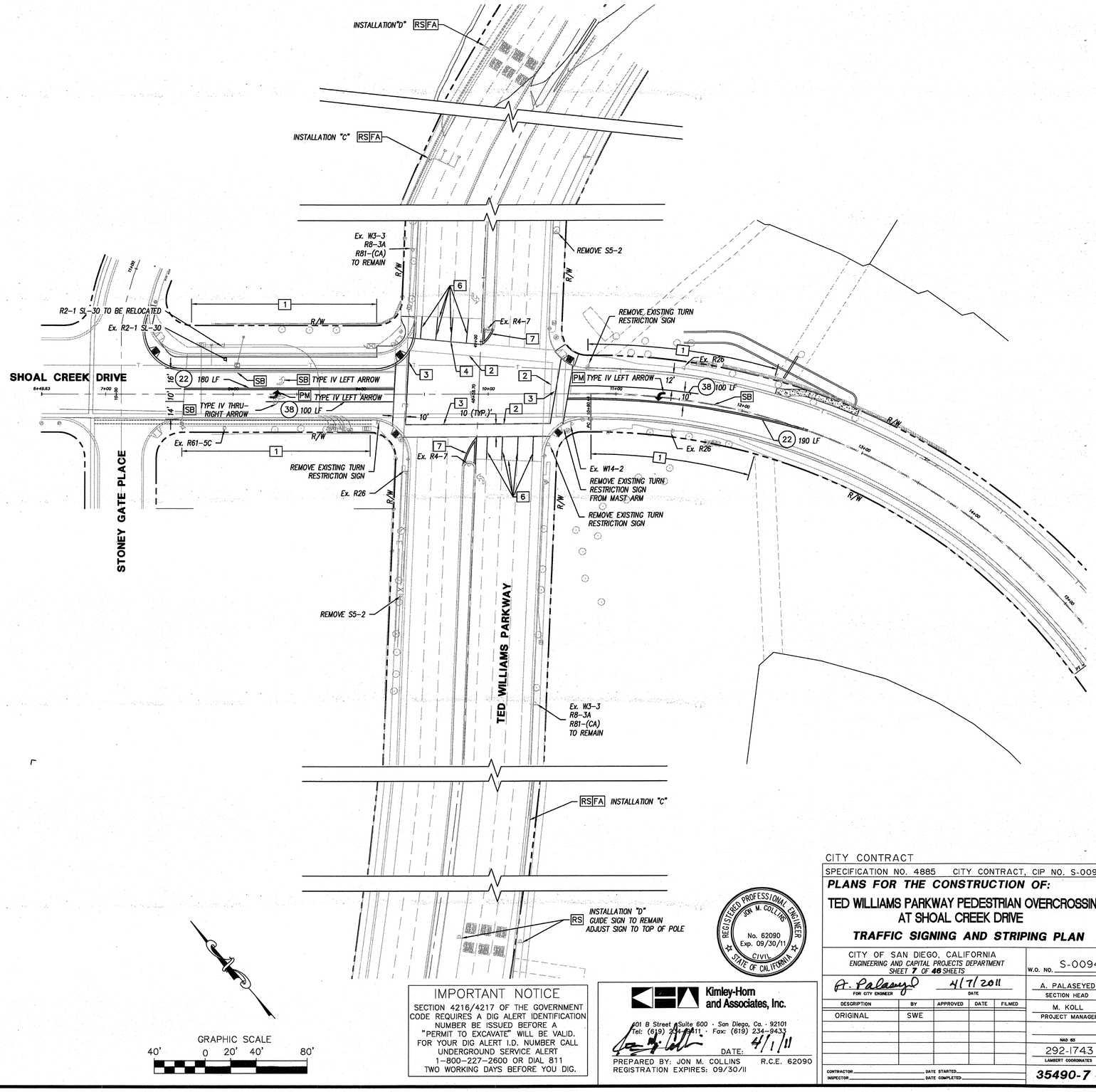

GRAPHIC SCALE
40' 0 20' 40' 80'

IMPORTANT NOTICE
SECTION 4216/4217 OF THE GOVERNMENT CODE REQUIRES A DIG ALERT IDENTIFICATION NUMBER BE ISSUED BEFORE A "PERMIT TO EXCAVATE" WILL BE VALID. FOR YOUR DIG ALERT I.D. NUMBER CALL UNDERGROUND SERVICE ALERT 1-800-227-2600 OR DIAL 811 TWO WORKING DAYS BEFORE YOU DIG.

REGISTERED PROFESSIONAL ENGINEER JON M. COLLINS No. 62090 Exp. 09/30/11 CIVIL STATE OF CALIFORNIA

Kimley-Horn and Associates, Inc.
401 B Street, Suite 600 · San Diego, Ca · 92101
Tel: (619) 234-0411 · Fax: (619) 234-9433

DATE: 4/1/11

PREPARED BY: JON M. COLLINS R.C.E. 62090
REGISTRATION EXPIRES: 09/30/11

CITY CONTRACT
SPECIFICATION NO. 4885 CITY CONTRACT, CIP NO. S-00941

PLANS FOR THE CONSTRUCTION OF:

TED WILLIAMS PARKWAY PEDESTRIAN OVERCROSSING AT SHOAL CREEK DRIVE

TRAFFIC SIGNING AND STRIPING PLAN

CITY OF SAN DIEGO, CALIFORNIA
ENGINEERING AND CAPITAL PROJECTS DEPARTMENT
SHEET 7 OF 46 SHEETS

W.O. NO. S-00941

A. Palaseyed 4/7/2011
FOR CITY ENGINEER DATE

A. PALASEYED
SECTION HEAD

M. KOLL
PROJECT MANAGER

DESCRIPTION	BY	APPROVED	DATE	FILMED
ORIGINAL	SWE			

NAD 83
292-1743
LAMBERT COORDINATES

CONTRACTOR _____ DATE STARTED _____
INSPECTOR _____ DATE COMPLETED _____

35490-7 -D

Mar 31, 2011 - 12:22pm K:\SND_TPTO\09527903\Design\sheets\279013-10.dwg tammie.moreno

Development Services, City of San Diego 8/29/2005 11:42 AM BDR-IMP.dwg

GENERAL NOTES:

1. THE LOCATION OF ALL UNDERGROUND UTILITIES IS APPROXIMATE. THE CONTRACTOR SHALL DETERMINE THE DEPTH OF ALL UTILITIES, INCLUDING THOSE NOT SHOWN ON THESE PLANS, AND VERIFY ALL CONDITIONS ON THE JOB.
2. THE CONTRACTOR SHALL OBTAIN ALL NECESSARY PERMITS AND NOTIFY ALL UTILITIES AND AGENCIES AT LEAST 48-HOURS IN ADVANCE OF CONSTRUCTION.
3. ALL LOOPS SHALL BE 6' DIAMETER TYPE E WITH 10' SPACING IN THE DIRECTION OF TRAVEL AND CENTERED IN THE TRAVEL LANE. LOOP SEALANT SHALL BE HOT MELT OR APPROVED EQUAL. SEE STANDARD PLAN ES-5A AND ES-5B FOR DETAILS. LOOP WIRE SHALL BE TYPE 1 WITH TYPE B LEAD IN CABLE. FRONT LOOPS SHALL HAVE 5 TURNS. ALL OTHER LOOPS SHALL HAVE 3 TURNS.
4. ALL PULL BOXES ARE NUMBER 5, AND CONDUIT IS 2 INCH UNLESS NOTED OTHERWISE.
5. ALL SIGNAL HEADS SHALL BE TWELVE-INCH IN DIAMETER WITH BACK PLATES AND GLASS LENSES.
6. PEDESTRIAN HEADS AND SIGNS SHALL BE INTERNATIONAL SYMBOLS. PEDESTRIAN SIGNALS SHALL BE TYPE G. PEDESTRIAN PUSH BUTTONS SHALL BE 2-INCH DIAMETER WITH A MAXIMUM FORCE OF 5 FOOT-POUNDS OF PRESSURE AND A MAXIMUM HEIGHT OF 42 INCHES PER ADA REQUIREMENTS.
7. GALVANIZED CIRCULAR ANCHOR BOLT NUT COVERS SHALL BE PROVIDED FOR ALL STANDARDS.
8. ALL TRAFFIC SIGNAL POLE FOUNDATIONS SHALL HAVE A 3-INCH CONDUIT INSTALLED TO THE ADJACENT NO. 5 PULL BOX.
9. THE TRAFFIC SIGNAL CONTRACTOR IS RESPONSIBLE FOR THE LAYOUT AND INSTALLATION OF LOOP DETECTORS, TRAFFIC STRIPING, PAVEMENT MARKINGS, PARKING REMOVAL, AND TRAFFIC SIGNING (EXCEPT STREET NAME SIGNS) AS SHOWN ON THESE PLANS.
   - 9.1. THE TRAFFIC SIGNAL CONTRACTOR SHALL OBTAIN THE APPROVAL OF THE TRAFFIC ENGINEERING DIVISION OF THE LOOP LOCATIONS PRIOR TO CUTTING, AND THE STRIPING, PAVEMENT MARKINGS, PARKING REMOVAL, AND SIGN LOCATIONS PRIOR TO PAINTING AND INSTALLATION.
   - 9.2. THE TRAFFIC SIGNAL CONTRACTOR SHALL INSTALL PARKING REMOVAL WITH AGENCY APPROVAL SO THAT ADVANCE NOTICE TO ADJACENT PROPERTY OWNERS CAN BE MADE BY THE TRAFFIC ENGINEERING DIVISION.
   - 9.3. THE TRAFFIC SIGNAL CONTRACTOR IS RESPONSIBLE FOR THE REMOVAL OF ALL CONFLICTING STRIPING AND PAVEMENT MARKINGS BY SANDBLASTING.
10. FLASHING SIGNAL OPERATION SHALL BE RED ON ALL PHASES. PEDESTRIAN SIGNALS SHALL BE BLANK DURING FLASHING OPERATION.
11. ALL TRAFFIC SIGNAL IMPROVEMENTS SHALL BE INSTALLED IN COORDINATION WITH THE SIGNING AND STRIPING CONTRACTOR.
12. ALL SIGNAL AND PEDESTRIAN HEADS SHALL BE LED TYPE.

CONSTRUCTION NOTES:

1. INSTALL 20' MAST-ARM WITH SIGNAL HEAD PER POLE SCHEDULE.
2. RE-NUMBER/ASSIGN LOOP DETECTORS PER THIS PLAN.
3. INSTALL 8(EIGHT) TYPE E' LOOP DETECTORS AS SHOWN.
4. REMOVE AND SALVAGE EXISTING SCHOOL CROSSING SIGN AND POLE. GUIDE SIGN ON CURB TO REMAIN. CONTRACTOR TO ADJUST GUIDE SIGN TO THE TOP OF THE POLE.
5. REMOVE EXISTING TYPE-9B FLASHING BEACON POLE WITH INSTALLATION "C".
6. ABANDON EXISTING LOOPS AND RE-INSTALL NEW LOOPS AS SHOWN.
7. RELOCATE CONTROLLER CABINET AND ALL EQUIPMENT. INSTALL NEW MAINTENANCE PAD AND FOUNDATION. MODIFY EXISTING WIRING FOR #3 OPERATIONS TO #8 OPERATIONS.
8. REMOVE 1 (ONE) 30AMP CIRCUIT BREAKER FOR SIGNAL AHEAD FLASHERS FROM SERVICE CABINET.
9. FURNISH AND INSTALL MODEL 511 EVPE PER MODIFIED S.D.E 102.
10. INSTALL PEDESTRIAN BARRICADE AND R49 SIGN PER CITY SDE-103.
11. REMOVE TURN RESTRICTION SIGN FROM MAST ARM.
12. CONTRACTOR TO PROTECT EXISTING CONDUIT IN PLACE OR ADJUST AS NEEDED FOR NEW FOOTING FOR PEDESTRIAN BRIDGE.
13. RELOCATE STREET NAME SIGN TO NEW POLE.

WORK TO BE DONE

INSTALL TRAFFIC SIGNAL AND INTERSECTION SAFETY LIGHTING SYSTEMS AS SHOWN AND NOTED.

DETECTOR ASSIGNMENT

DETECTOR	PHASE	SLOT	FIELD TERMINAL
1	#2	I2U	T2-5 & 6
2	#2	I2L	T2-7 & 8
3	#2	I3U	T2-9 & 10
4	#2	I3L	T2-11 & 12
5	#5	J1U	T3-1 & 2
6	#4	I6U	T4-9 & 10
7	#4	I6L	T4-11 & 12
8	#6	J2U	T3-5 & 6
9	#6	J2L	T3-7 & 8
10	#6	J3U	T3-9 & 10
11	#6	J3L	T3-11 & 12
12	#1	I1U	T2-1 & 2
13	#8	J6U	T5-9 & 10
14	#8	J6L	T5-11 & 12
PPB	#3 (A)	I13L(A)	T8-8 & COM9 (A)
PPB	#2	I12U	T8-4 & COM6
PPB	#4	I12L	T8-5 & COM9 (A)
PPB	#6	I13U	T8-7 & COM9
EVP	#2&#5	J12U	T9-4 & COM6
EVP	#4	J13U	T9-7 & COM9
EVP	#1&#6	J12L	T9-5 & COM6
EVP	#8	J13L	T9-8 & COM9
Flash	–	I14U	T8-10 & COM12

POLE SCHEDULE

NO.	TYPE	POLE DATA HGT	SIG. M.A.	LUM. M.A.	LPSV LUMINAIRE	SIGNAL MOUNTING M.A.	VEH.	PED.	PPB PHASE	PPB POLE QUAD	POLE PLACEMENT A	B	REMARKS
Ⓐ	17-2-70	30'	20'	15'	135W	MAS	SV-2-TB	SP-2-T	#6 / #3	E/N	EXISTING		RS
Ⓑ	17-2-100	30'	20'	15'	135W	MAS	SV-2-TB	SP-1-T	#6	S	14'	3'	N
Ⓒ	29-5-100	30'	55'	15'	135W	3-MAS	SV-1-T				-5'	8'	N
Ⓓ	23-5-70	30'	55'	15'	135W	3-MAS	SV-2-TB	SP-2-T	#3 / #2	S/E	EXISTING		RS
Ⓔ	61-5-100	30'	60'	15'	135W	3-MAS	SV-2-TB	SP-1-T	#2	S/W	18'	4'	N
Ⓕ	19-2-70	30'	25'	15'	135W	MAS	SV-2-TB	SP-2-T	#4 / #2	S/W	EXISTING		
Ⓖ	23-5-70	30'	55'	15'	135W	3-MAS	SV-2-TB	SP-2-T	#6 / #4	N/W	EXISTING		

ALL EQUIPMENT EXISTING EXCEPT WHERE NOTE (N) = NEW, (RL) = RELOCATED.

● CONDUCTOR SCHEDULE

AWG	CIRCUIT	CONDUIT RUN NUMBER 1	2	3	4	5	6
#14	#1	3	3	3	3	6	3
	#2				3	3	
	#4			3	3	3	
	#5				3	3	
	#6	3	3			3	3
	#8	3				3	
	#2P			2	2	2	
	#4P	2		2	2	2N	
	#6P	2			2	2	
	#8P						
	#2PBB			1	1	2	
	#4PPB	1		1		1	
	#6PPB	1					
	#8PPB						
	SPARES	3	3	3	3	6	3
	PPB COMM	1		1	1	3	1
	TOTAL	19	9	16	21	40	10
#10	SIG. COMM	1	1	1	1	1	1
	LUMINAIRE	2	2	2	2	4	2
	TOTAL	3	3	3	3	5	3
LOOP DET. CABLE 2-#12 TYPE B	#1		1				1
	#2			4	4	4	
	#4	3				3	
	#5			1	1	1	
	#6		4				4
	#8				2	2	
TOTAL EV-DLC		3	5	5	7	10	5
#6 SERVICE		2	2(N)	2(N)	2(N)	4(N)/2	2
EVP DET. CABLE		–	1	1	2	3	1
INTERCONNECT 6PAIR #19		–	–	–	–	–	–
CONDUIT SIZE		2-1½"	2"	2"	2-1½"	2-3"	2"

● ALL WIRING EXISTING EXCEPT NOTED (N) = NEW, (A) = ABANDON. ALL LOOPS ARE NEW

EXISTING PHASE DIAGRAM

1	2	3	4
5	6	7	8
		NOT USED	NOT USED

EMERGENCY OPERATION: ALL PHASES FLASH RED

PROPOSED PHASE DIAGRAM

1	2	3	4
		NOT USED	
5	6	7	8
		NOT USED	

EMERGENCY OPERATION: ALL PHASES FLASH RED

NOTE: CONTRACTOR SHALL VERIFY ALL CONTROLLING FIELD DIMENSIONS BEFORE ORDERING OR FABRICATING ANY MATERIAL.

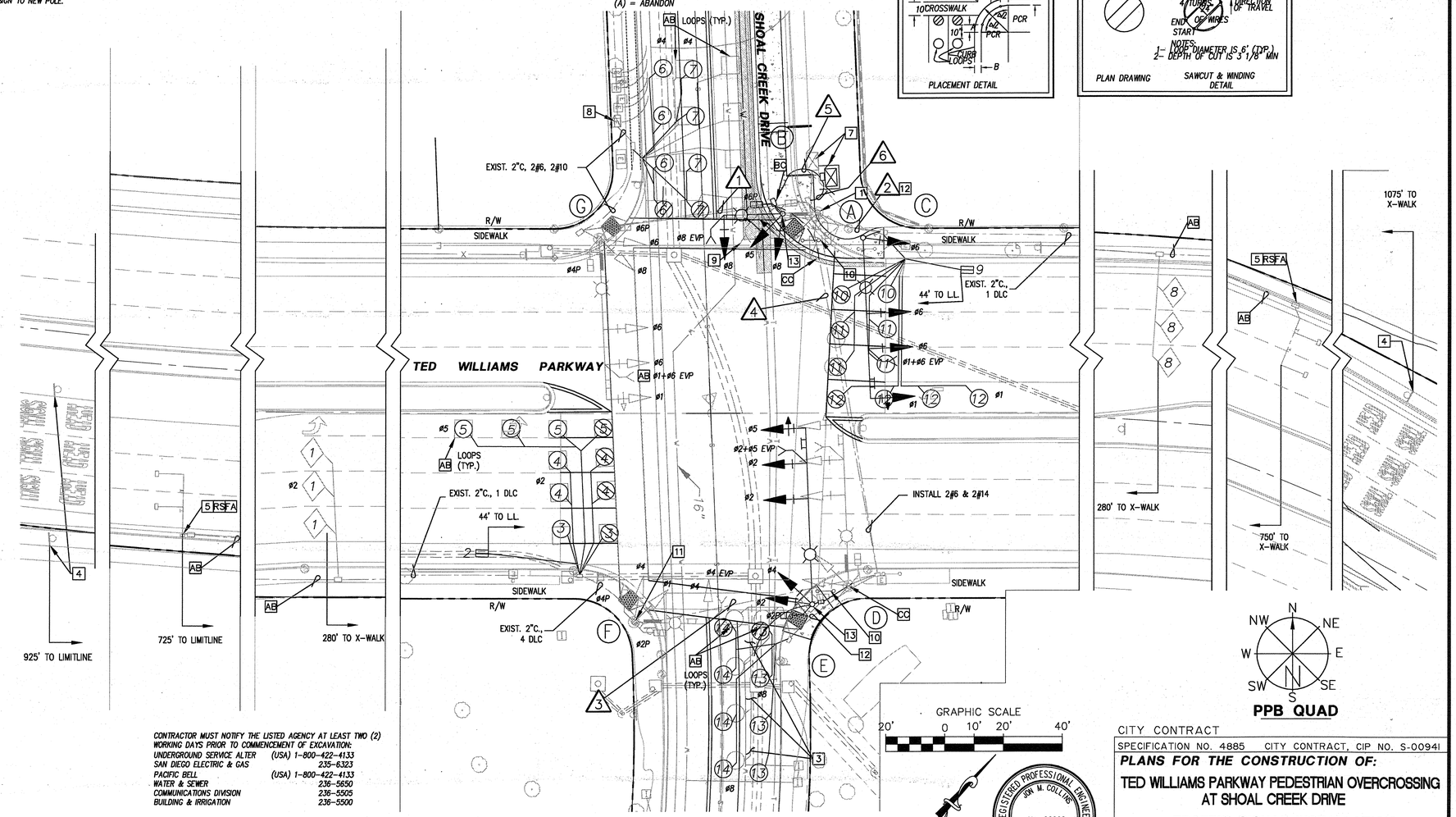

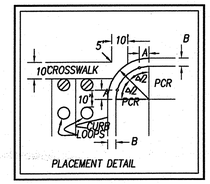

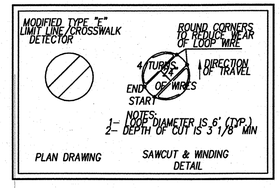

PPB QUAD

CONTRACTOR MUST NOTIFY THE LISTED AGENCY AT LEAST TWO (2) WORKING DAYS PRIOR TO COMMENCEMENT OF EXCAVATION:

UNDERGROUND SERVICE ALTER	(USA) 1-800-422-4133
SAN DIEGO ELECTRIC & GAS	235-6323
PACIFIC BELL	(USA) 1-800-422-4133
WATER & SEWER	236-5650
COMMUNICATIONS DIVISION	236-5505
BUILDING & IRRIGATION	236-5500

DECLARATION OF RESPONSIBLE CHARGE

I HEREBY DECLARE THAT I AM THE ENGINEER OF WORK FOR THIS PROJECT, THAT I HAVE EXERCISED RESPONSIBLE CHARGE OVER THE DESIGN OF THE PROJECT AS DEFINED IN SECTION 6703 OF THE BUSINESS AND PROFESSIONS CODE, AND THAT THE DESIGN IS CONSISTENT WITH CURRENT STANDARDS.

I UNDERSTAND THAT THE CHECK OF PROJECT DRAWINGS AND SPECIFICATIONS BY THE CITY OF SAN DIEGO IS CONFINED TO A REVIEW ONLY AND DOES NOT RELIEVE ME, AS ENGINEER OF WORK, OF MY RESPONSIBILITIES FOR PROJECT DESIGN.

JON M. COLLINS R.C.E. NO. 62090 EXP. 09-30-11 — 4/1/11 DATE

IMPORTANT NOTICE

SECTION 4216/4217 OF THE GOVERNMENT CODE REQUIRES A DIG ALERT IDENTIFICATION NUMBER BE ISSUED BEFORE A "PERMIT TO EXCAVATE" WILL BE VALID. FOR YOUR DIG ALERT I.D. NUMBER CALL UNDERGROUND SERVICE ALERT 1-800-227-2600 OR DIAL 811 TWO WORKING DAYS BEFORE YOU DIG.

REGISTERED PROFESSIONAL ENGINEER — JON M. COLLINS — No. 62090 Exp. 09/30/11 — CIVIL — STATE OF CALIFORNIA

Kimley-Horn and Associates, Inc.
401 B Street - Suite 600 - San Diego, Ca. - 92101
Tel: (619) 234-9411 - Fax: (619) 234-9433
PREPARED BY: JON M. COLLINS R.C.E. 62090 DATE: 4/1/11
REGISTRATION EXPIRES: 09/30/11

CITY CONTRACT

SPECIFICATION NO. 4885 CITY CONTRACT, CIP NO. S-00941

PLANS FOR THE CONSTRUCTION OF:

TED WILLIAMS PARKWAY PEDESTRIAN OVERCROSSING AT SHOAL CREEK DRIVE

TRAFFIC SIGNAL INSTALLATION

CITY OF SAN DIEGO, CALIFORNIA
ENGINEERING AND CAPITAL PROJECTS DEPARTMENT
SHEET 8 OF 46 SHEETS

W.O. NO. S-00941

A. Palaseyed 4/7/2011
FOR CITY ENGINEER DATE

A. PALASEYED, SECTION HEAD
M. KOLL, PROJECT MANAGER

DESCRIPTION	BY	APPROVED	DATE	FILMED
ORIGINAL	SWE			

NAD 83
292-1743
LAMBERT COORDINATES

CONTRACTOR _____ DATE STARTED _____
INSPECTOR _____ DATE COMPLETED _____

35490-8-D

Mar 31, 2011 - 12:22pm K:\SND_TPTO\08527913\Design\sheets\279013-11.dwg tammie.moreno

Development Services, City of San Diego 8/29/2005 11:42 AM BDR-IMP.dwg

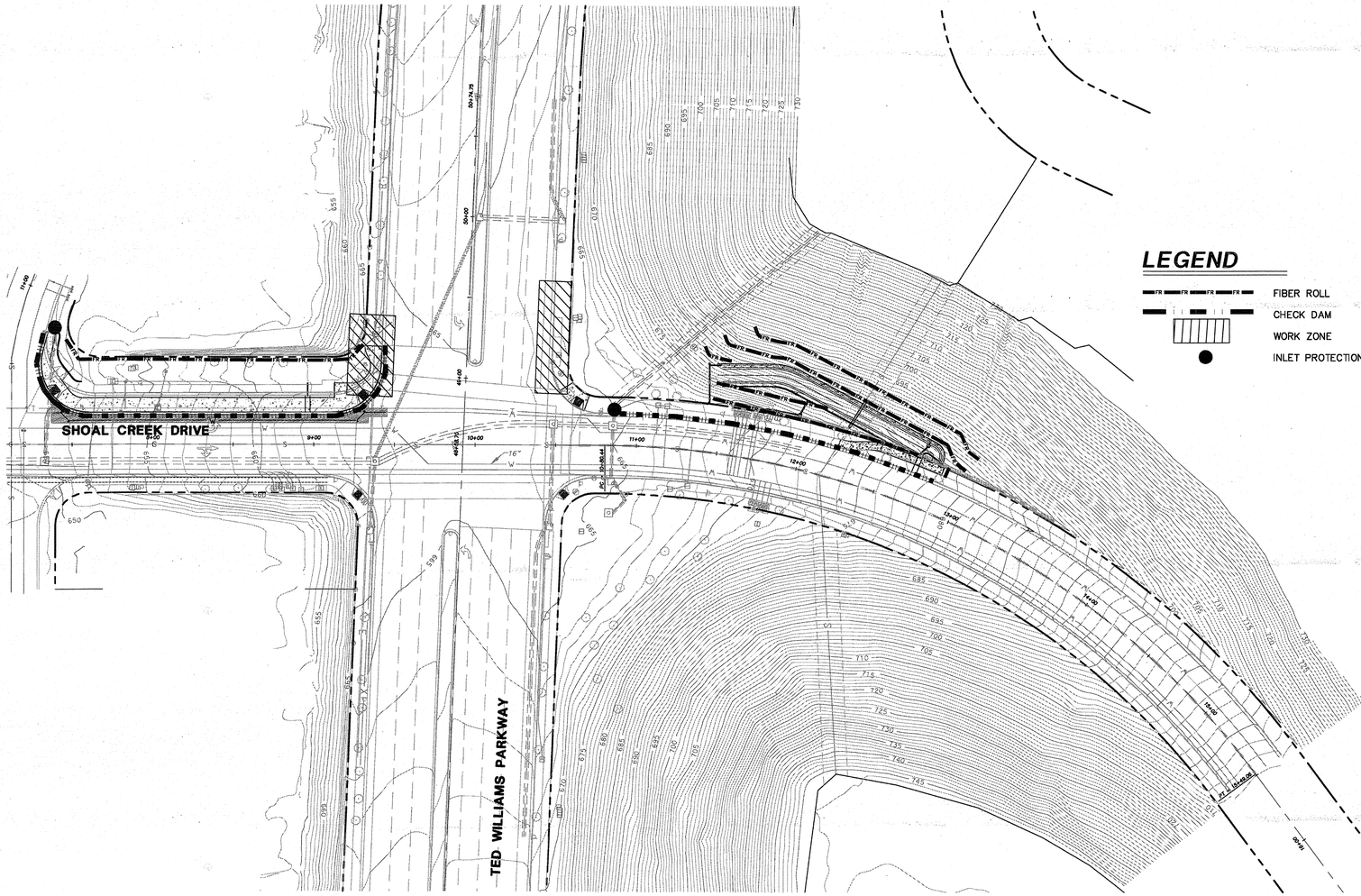

LEGEND

- FIBER ROLL
- CHECK DAM
- WORK ZONE
- INLET PROTECTION

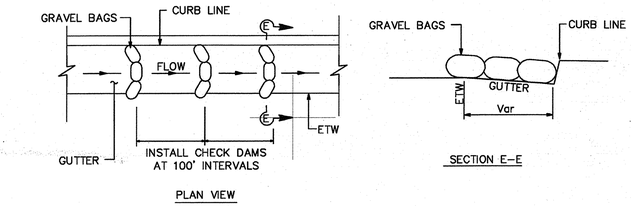

A 12|12 TEMPORARY GRAVEL BAG CHECK DAM

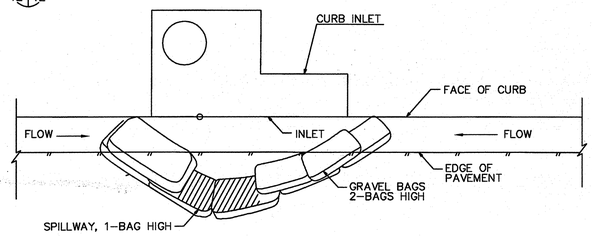

B 12|12 TYPICAL CURB INLET PROTECTION

NOTES:
1. THIS PLAN ACCURATE FOR WATER POLLUTION CONTROL WORK ONLY.

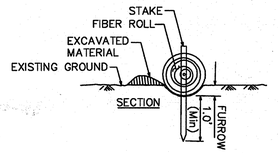

C 12|12 TEMPORARY FIBER ROLL

CONSTRUCTION NOTES

1. STABILIZED CONSTRUCTION ENTRANCE/EXIT. SEE CALTRANS BEST MANAGEMENT PRACTICES MANUAL (2003) TC–1 FOR INSTALLATION INSTRUCTIONS.

2. INSTALL CONCRETE WASTE WATER MANAGEMENT CONTROL. SEE CALTRANS BEST MANAGEMENT PRACTICES MANUAL (2003) WM–8 FOR INSTALLATION INSTRUCTIONS.

3. INSTALL TIRE WASH. SEE CALTRANS BEST MANAGEMENT PRACTICES MANUAL (2003) TL–3 FOR INSTALLATION INSTRUCTIONS

4. INSTALL TEMPORARY FIBER ROLLS. SEE CALTRANS BEST MANAGEMENT PRACTICES MANUAL (2003) SC–5 FOR INSTALLATION INSTRUCTIONS. INSTALL 1' BEYOND LIMITS OF WORK TO ALLOW PROJECT CONSTRUCTION. OVERLAP 3' MIN.

PLAN

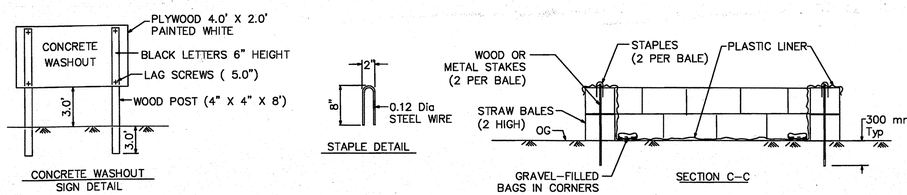

NOTE: CONTRACTOR SHALL VERIFY ALL CONTROLLING FIELD DIMENSIONS BEFORE ORDERING OR FABRICATING ANY MATERIAL.

D 12|12 TEMPORARY CONCRETE WASHOUT FACILITY

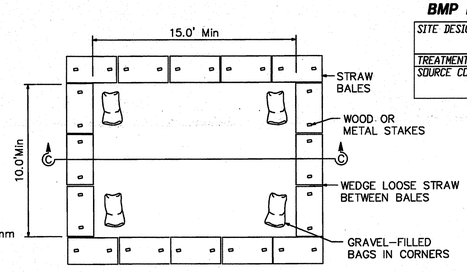

TEMPORARY CONCRETE WASHOUT FACILITY (ON GRADE)

POST-CONSTRUCTION PERMANENT BMP OPERATION & MAINTENANCE PROCEDURE DETAILS

O&M RESPONSIBLE PARTY DESIGNEE/PROPERTY OWNER/HOA/CITY/OTHER

BMP DESCRIPTION	INSPECTION FREQUENCY	MAINTENANCE FREQUENCY	MAINTENANCE METHOD	SHEET NUMBER(S)
SITE DESIGN	VISUALLY INSPECT BMPS PRIOR TO STORM EVENTS	AS NECESSARY FOLLOWING STORM EVENT OR ANNUALLY	VEGETATION MAINTENANCE	40–44
TREATMENT CONTROL	N/A PER THE WATER QUALITY TECHNICAL REPORT			
SOURCE CONTROL	VISUALLY INSPECT BMPS PRIOR TO STORM EVENTS	AS NECESSARY FOLLOWING STORM EVENT OR ANNUALLY	TRASH AND DEBRIS REMOVAL, IRRIGATION SYSTEM UPKEEP	40–44

REGISTERED PROFESSIONAL ENGINEER — JON M. COLLINS — No. 62090 Exp. 09/30/11 — CIVIL — STATE OF CALIFORNIA

IMPORTANT NOTICE

SECTION 4216/4217 OF THE GOVERNMENT CODE REQUIRES A DIG ALERT IDENTIFICATION NUMBER BE ISSUED BEFORE A "PERMIT TO EXCAVATE" WILL BE VALID. FOR YOUR DIG ALERT I.D. NUMBER CALL UNDERGROUND SERVICE ALERT 1–800–227–2600 OR DIAL 811 TWO WORKING DAYS BEFORE YOU DIG.

Kimley-Horn and Associates, Inc.
401 B Street · Suite 600 · San Diego, Ca. · 92101
Tel: (619) 234-9411 · Fax: (619) 234-9433

PREPARED BY: JON M. COLLINS R.C.E. 62090 DATE: 4/1/11
REGISTRATION EXPIRES: 09/30/11

CITY CONTRACT

SPECIFICATION NO. 4885 CITY CONTRACT, CIP NO. S-00941

PLANS FOR THE CONSTRUCTION OF:

TED WILLIAMS PARKWAY PEDESTRIAN OVERCROSSING AT SHOAL CREEK DRIVE

WATER POLLUTION CONTROL PLAN

CITY OF SAN DIEGO, CALIFORNIA
ENGINEERING AND CAPITAL PROJECTS DEPARTMENT
SHEET 9 OF 46 SHEETS

W.O. NO. S-00941

A. Palaseyed 4/7/2011
FOR CITY ENGINEER DATE

A. PALASEYED, SECTION HEAD

M. KOLL, PROJECT MANAGER

DESCRIPTION	BY	APPROVED	DATE	FILMED
ORIGINAL	SWE			

MAD 83
292-1743
LAMBERT COORDINATES

CONTRACTOR _____ DATE STARTED _____
INSPECTOR _____ DATE COMPLETED _____

35490-9-D

Mar 31, 2011 - 12:22pm K:\SND_TPTO\08527901\3\Design\sheets\279013-12.dwg tammie.moreno

Development Services, City of San Diego 8/29/2005 11:42 AM BDR-IMP.dwg

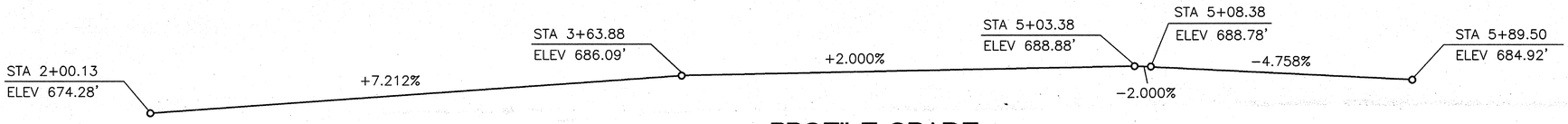

PROFILE GRADE

NO SCALE

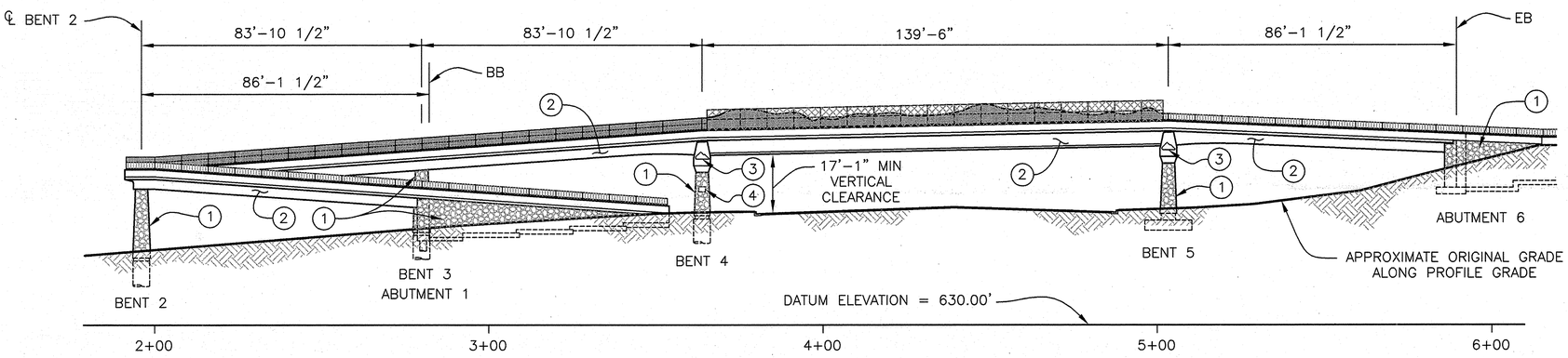

ELEVATION

1" = 20'−0"

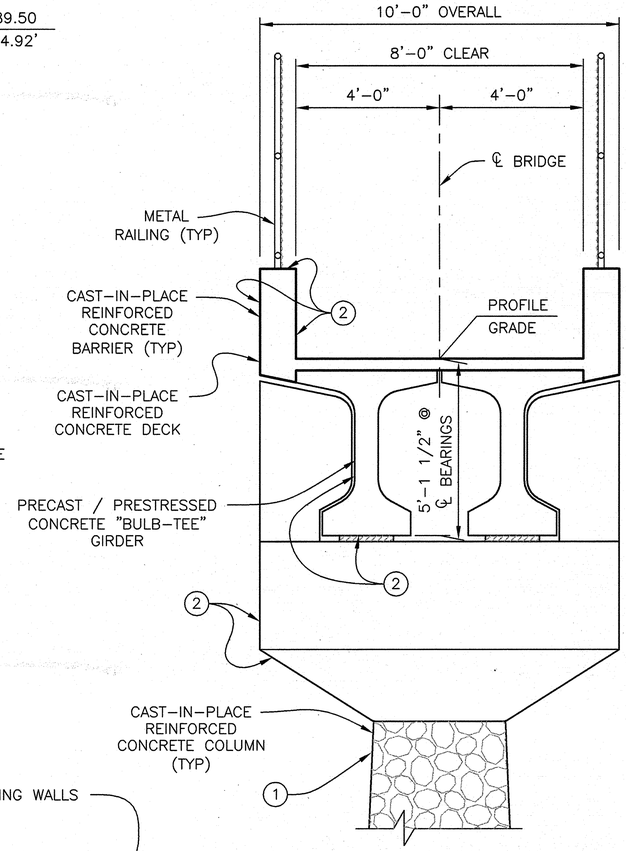

TYPICAL SECTION OVER TED WILLIAMS PARKWAY

1" = 2'−0"

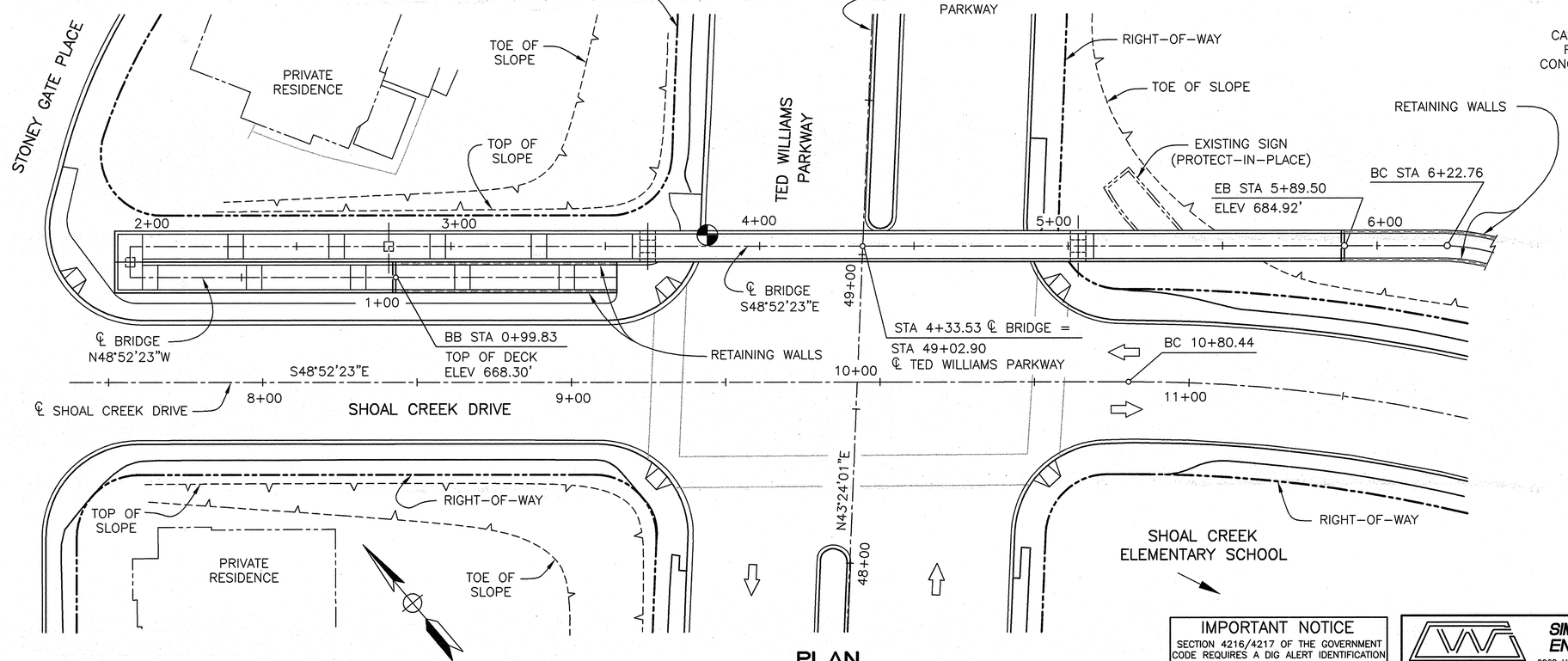

PLAN

1" = 20'−0"

NOTE: CONTRACTOR SHALL VERIFY ALL CONTROLLING FIELD DIMENSIONS BEFORE ORDERING OR FABRICATING ANY MATERIAL.

NOTE: FOR INDEX TO PLANS AND GENERAL NOTES, SEE "DECK CONTOURS" SHEET.

LEGEND:

(1) – ARCHITECTURAL FINISH (STONE FACADE)

(2) – STAINED CONCRETE WITH ANTI−GRAFFITI COATING

(3) – BRONZE PLAQUE WITH CARMEL MOUNTAIN RANCH LOGO (NEAR SIDE AND FAR SIDE)

(4) – BRONZE SIGN

◓ – INDICATES POINT OF MINIMUM VERTICAL CLEARANCE

IMPORTANT NOTICE

SECTION 4216/4217 OF THE GOVERNMENT CODE REQUIRES A DIG ALERT IDENTIFICATION NUMBER BE ISSUED BEFORE A "PERMIT TO EXCAVATE" WILL BE VALID. FOR YOUR DIG ALERT I.D. NUMBER CALL UNDERGROUND SERVICE ALERT 1−800−227−2600 OR DIAL 811 TWO WORKING DAYS BEFORE YOU DIG.

SIMON WONG ENGINEERING
9968 Hibert Street, Second Floor
San Diego, CA 92131
(858) 566−3113
Job No. 500−773
Craig Shannon DATE: 4−1−11
PREPARED BY: CRAIG SHANNON R.C.E. NO. 66998
REGISTRATION EXPIRES: 09/30/12

REGISTERED PROFESSIONAL ENGINEER — Craig Shannon — No. 66998 — Exp. 9−30−12 — CIVIL — STATE OF CALIFORNIA

CITY CONTRACT

SPECIFICATION NO. 4885 CITY CONTRACT, CIP NO. S−00941

PLANS FOR THE CONSTRUCTION OF:

TED WILLIAMS PARKWAY PEDESTRIAN OVERCROSSING AT SHOAL CREEK DRIVE

GENERAL PLAN

CITY OF SAN DIEGO, CALIFORNIA
ENGINEERING AND CAPITAL PROJECTS DEPARTMENT
SHEET 10 OF 46 SHEETS

W.O. NO. S−00941

A. Palaseyed FOR CITY ENGINEER 4/7/2011 DATE

A. PALASEYED SECTION HEAD

M. KOLL PROJECT MANAGER

DESCRIPTION	BY	APPROVED	DATE	FILMED
ORIGINAL	SWE			

NAD 83
292−1743
LAMBERT COORDINATES

CONTRACTOR ____ DATE STARTED ____
INSPECTOR ____ DATE COMPLETED ____

35490−10−D

INDEX TO BRIDGE PLANS

SHEET NUMBER	DESCRIPTION
10	GENERAL PLAN
11	INDEX TO PLANS
12	DECK CONTOURS
13	FOUNDATION PLAN
14	ABUTMENT 1 LAYOUT
15	ABUTMENT 6 LAYOUT 1 OF 2
16	ABUTMENT 6 LAYOUT 2 OF 2
17	ABUTMENT DETAILS NO. 1
18	ABUTMENT DETAILS NO. 2
19	ABUTMENT DETAILS NO. 3
20	BENT DETAILS NO. 1
21	BENT DETAILS NO. 2
22	BENT DETAILS NO. 3
23	BENT DETAILS NO. 4
24	BENT DETAILS NO. 5
25	TYPICAL SECTIONS
26	GIRDER LAYOUT
27	GIRDER DETAILS
28	PRESTRESSED BULB–TEE GIRDER DETAILS
29	PRESTRESSED BULB–TEE GIRDER DIAPHRAGM DETAILS
30	MISCELLANEOUS DETAILS
31	RAILING DETAILS NO. 1
32	RAILING DETAILS NO. 2
33	RAILING DETAILS NO. 3
34	FENCEWALL DETAILS NO. 1
35	FENCEWALL DETAILS NO. 2
36	FENCEWALL DETAILS NO. 3
37	LOG OF TEST BORINGS NO. 1
38	LOG OF TEST BORINGS NO. 2

GENERAL NOTES
LOAD AND RESISTANCE FACTOR DESIGN

DESIGN: AASHTO LRFD BRIDGE DESIGN SPECIFICATIONS, FOURTH EDITION, 2007 WITH INTERIMS THROUGH 2008 AND THE CALTRANS AMENDMENTS, V3.06.01.

SEISMIC DESIGN: CALTRANS SEISMIC DESIGN CRITERIA (SDC), VERSION 1.4, DATED JUNE 2006.

LIVE LOAD: 85 psf PEDESTRIAN LOADING AND H5

SEISMIC LOADING: SEISMIC SDC ARS CURVE FOR SOIL PROFILE C
(M = 7.25 ± 0.25), SEE CURVE
(PEAK ROCK ACCELERATION = 0.3g)

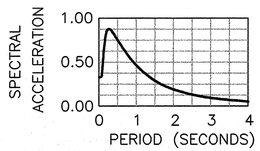

REINFORCED CONCRETE: fy = 60 ksi
f'c = 3.6 ksi (UNLESS NOTED OTHERWISE)
n = 8

PRESTRESSED CONCRETE: SEE PRESTRESSING NOTES AND TABLE ON "GIRDER LAYOUT" AND "PRESTRESSED BULB–TEE GIRDER DETAILS" SHEETS.

SPECIFICATIONS

STANDARD SPECIFICATIONS DATED MAY 2006, STATE OF CALIFORNIA, DEPARTMENT OF TRANSPORTATION.

SPECIAL PROVISIONS FOR THE CONSTRUCTION OF TED WILLIAMS PARKWAY PEDESTRIAN OVERCROSSING AT SHOAL CREEK DRIVE.

NOTE: CONTRACTOR SHALL VERIFY ALL CONTROLLING FIELD DIMENSIONS BEFORE ORDERING OR FABRICATING ANY MATERIAL.

QUANTITIES

STRUCTURE EXCAVATION (BRIDGE)	156 CY
STRUCTURE BACKFILL (BRIDGE)	117 CY
STRUCTURE EXCAVATION (RETAINING WALL)	882 CY
STRUCTURE BACKFILL (RETAINING WALL)	679 CY
24"ø CAST–IN–DRILLED–HOLE CONCRETE PILING	66 LF
66"ø CAST–IN–DRILLED–HOLE CONCRETE PILING	139 LF
STRUCTURAL CONCRETE, BRIDGE FOOTING	33 CY
STRUCTURAL CONCRETE, BRIDGE	330 CY
STRUCTURAL CONCRETE, RETAINING WALL	306 CY
MINOR CONCRETE (RAMP PAVING)	23 CY
BAR REINFORCING STEEL (BRIDGE)	116,500 LB
BAR REINFORCING STEEL (RETAINING WALL)	43,300 LB
PRESTRESSING CAST–IN–PLACE CONCRETE	1 LS
FURNISH PRECAST GIRDERS	2 EA
ERECT PRECAST GIRDERS	2 EA
JOINT SEAL (TYPE B – MR 1 1/4")	18 LF
JOINT SEAL (TYPE B – MR 2")	9 LF
JOINT SEAL (TYPE B – MR 2 1/2")	9 LF
ARCHITECTURAL FINISH (STONE FACADE)	2,900 SF
PREPARE AND STAIN CONCRETE	18,600 SF
ANTI–GRAFFITI PROTECTIVE COATING	16,820 SF
CONCRETE BARRIER	1,283 LF
METAL BRIDGE RAILING (TYPE A)	830 LF
METAL BRIDGE RAILING (TYPE B)	174 LF
METAL BRIDGE RAILING (TYPE C)	137 LF
METAL BRIDGE RAILING (TYPE D)	137 LF
CABLE RAILING	140 LF
BRIDGE DECK DRAINAGE SYSTEM	266 LB
BRONZE PLAQUES	1 LS
ARCHITECTURAL REFEREE SAMPLE	1 LS
CEMENT TREATED PERMEABLE BASE	31 CY
FENCE WALL	102 LF

INDEX TO STANDARD PLANS

THE FOLLOWING STATE OF CALIFORNIA, DEPARTMENT OF TRANSPORTATION STANDARD PLANS, DATED MAY 2006, ARE A PART OF THESE CONTRACT DRAWINGS.

A10A	ACRONYMS AND ABBREVIATIONS (SHEET 1 OF 2)
A10B	ACRONYMS AND ABBREVIATIONS (SHEET 2 OF 2)
A62–C	LIMITS OF PAYMENT FOR EXCAVATION AND BACKFILL BRIDGE
B0–1	BRIDGE DETAILS
B0–3	BRIDGE DETAILS
B0–5	BRIDGE DETAILS
B0–13	BRIDGE DETAILS
B3–9	RETAINING WALL DETAILS NO. 2
B6–21	JOINT SEALS (MAXIMUM MOVEMENT RATING = 2")
B7–1	BOX GIRDER DETAILS
B7–5	DECK DRAINS
B8–5	CAST–IN–PLACE PRESTRESSED GIRDER DETAILS
B11–47	CABLE RAILING
B11–51	TUBULAR HAND RAILING
B11–52	CHAIN LINK RAILING TYPE 7

ABBREVIATIONS

EQ. SP.	EQUALLY SPACED
O.C.	ON CENTER
RWLOL	RETAINING WALL LAYOUT LINE
SF	SQUARE FEET
BRG	BEARING
TB	TOP OF BARRIER

PLAN SYMBOLS

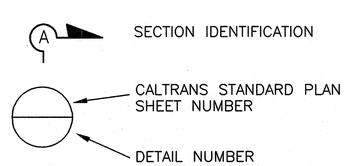

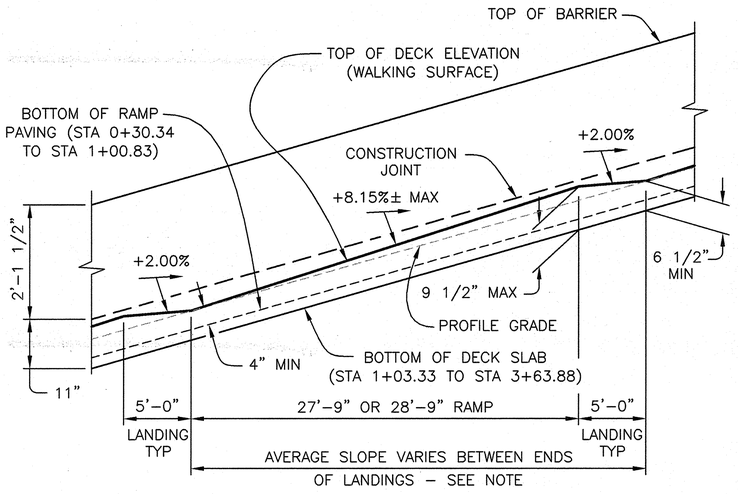

NOTE: TOP OF BARRIER, CONSTRUCTION JOINT, AND BOTTOM OF DECK SLAB TO BE PARALLEL. ACTUAL AVERAGE SLOPE ALONG INDIVIDUAL SEGMENTS IS DEPENDENT ON RAMP LENGTHS AND TOTAL NUMBER OF RAMPS AND LANDINGS.

LANDING DETAIL
(STA 0+28.22 TO STA 3+63.88)

NO SCALE

REGISTERED PROFESSIONAL ENGINEER — Craig Shannon — No. 66998 — Exp. 9-30-12 — CIVIL — STATE OF CALIFORNIA

SIMON WONG ENGINEERING
9968 Hibert Street, Second Floor
San Diego, CA 92131
(858) 566–3113

Job No. 500–773

Craig Shannon DATE: 4-1-11

PREPARED BY: CRAIG SHANNON R.C.E. NO. 66998
REGISTRATION EXPIRES: 09/30/12

CITY CONTRACT
SPECIFICATION NO. 4885 CITY CONTRACT, CIP NO. S–00941

PLANS FOR THE CONSTRUCTION OF:

TED WILLIAMS PARKWAY PEDESTRIAN OVERCROSSING AT SHOAL CREEK DRIVE

INDEX TO PLANS

CITY OF SAN DIEGO, CALIFORNIA
ENGINEERING AND CAPITAL PROJECTS DEPARTMENT
SHEET **11** OF **46** SHEETS

W.O. NO. S–00941

A. Palaseyed FOR CITY ENGINEER — 4/7/2011 DATE

A. PALASEYED SECTION HEAD

M. KOLL PROJECT MANAGER

DESCRIPTION	BY	APPROVED	DATE	FILMED
ORIGINAL	SWE			

NAD 83

292–1743 LAMBERT COORDINATES

CONTRACTOR _____ DATE STARTED _____
INSPECTOR _____ DATE COMPLETED _____

35490-11-D

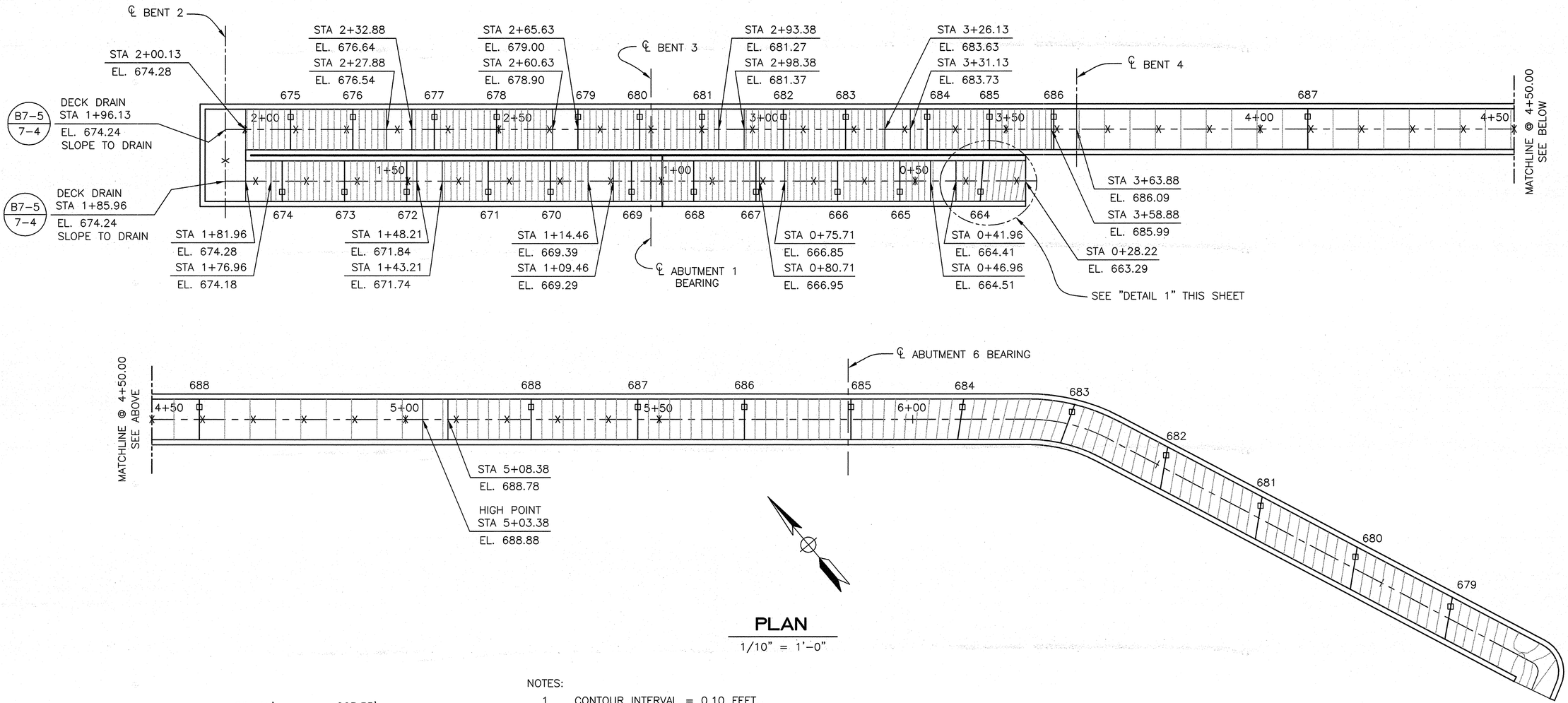

PLAN

1/10" = 1'–0"

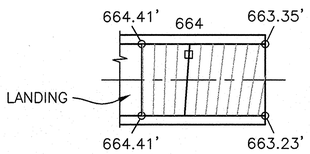

DETAIL 1

1/8" = 1'–0"

NOTES:

1. CONTOUR INTERVAL = 0.10 FEET.
2. CONTOURS DO NOT INCLUDE ALLOWANCES FOR CAMBER OR FALSEWORK SETTLEMENT.
3. ⊡ – INDICATES EVEN FOOT CONTOURS.
4. X – 10 FOOT INTERVALS ALONG STATION LINE.
5. CONTOURS INDICATE TOP OF DECK ELEVATIONS (SEE "LANDING DETAIL" THIS SHEET).

CITY CONTRACT

SPECIFICATION NO. 4885 CITY CONTRACT, CIP NO. S–00941

PLANS FOR THE CONSTRUCTION OF:

TED WILLIAMS PARKWAY PEDESTRIAN OVERCROSSING AT SHOAL CREEK DRIVE

DECK CONTOURS

REGISTERED PROFESSIONAL ENGINEER — Craig Shannon — No. 66998 — Exp. 9–30–12 — CIVIL — STATE OF CALIFORNIA

CITY OF SAN DIEGO, CALIFORNIA
ENGINEERING AND CAPITAL PROJECTS DEPARTMENT
SHEET 12 OF 48 SHEETS

W.O. NO. S–00941

A. Palaseyed 4/7/2011
FOR CITY ENGINEER DATE

A. PALASEYED
SECTION HEAD

M. KOLL
PROJECT MANAGER

DESCRIPTION	BY	APPROVED	DATE	FILMED
ORIGINAL	SWE			

NAD 83
292–1743
LAMBERT COORDINATES

CONTRACTOR _____ DATE STARTED _____
INSPECTOR _____ DATE COMPLETED _____

35490-12-D

SIMON WONG ENGINEERING
9968 Hibert Street, Second Floor
San Diego, CA 92131
(858) 586–3113
Job No. 500–773
Craig Shannon DATE: 4–1–11
PREPARED BY: CRAIG SHANNON R.C.E. NO. 66998
REGISTRATION EXPIRES: 09/30/12

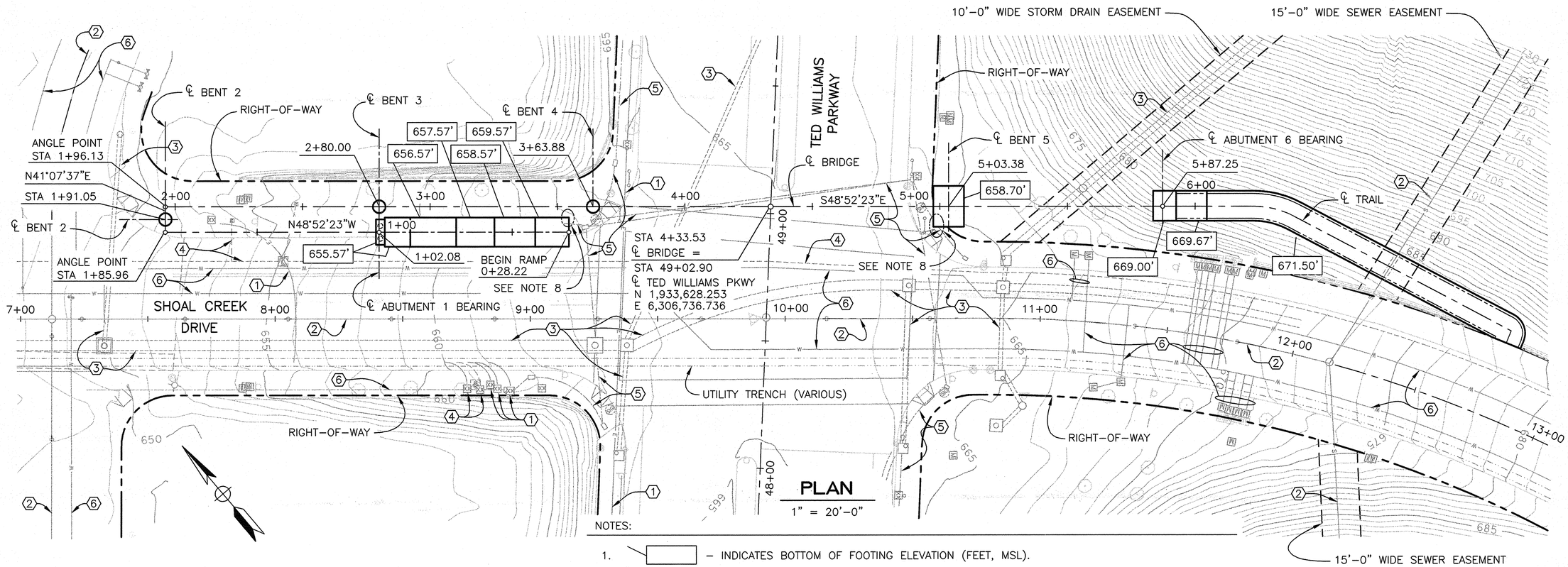

NOTES:

1. ▭ – INDICATES BOTTOM OF FOOTING ELEVATION (FEET, MSL).
2. ○ – INDICATES 66"ø CIDH PILE
3. ☼ – INDICATES 24"ø CIDH PILE
4. FOR LIMITS OF EXCAVATION AND BACKFILL, SEE (A62-C).
5. CALL UNDERGROUND SERVICE ALERT (USA) AT 1-800-227-2600 AT LEAST TWO WORKING DAYS BEFORE PERFORMING ANY EXCAVATION.
6. EXCAVATIONS FOR THE FOUNDATIONS SHALL BE OBSERVED BY THE GEOTECHNICAL ENGINEER PRIOR TO PLACING CONCRETE AND REINFORCING. THE CONTRACTOR SHALL NOTIFY THE GEOTECHNICAL ENGINEER AT LEAST 48 HOURS PRIOR TO EXCAVATING DEEP OR SHALLOW FOUNDATIONS. THE GEOTECHNICAL ENGINEER SHALL PROVIDE A LETTER STATING THAT THE FOUNDATIONS HAVE BEEN EXCAVATED IN SUBSTANTIAL CONFORMANCE WITH THE PROJECT GEOTECHNICAL REPORT.
7. FOR UTILITY SIZES AND TYPES, SEE CIVIL PLAN SHEET "SHOAL CREEK PLAN AND PROFILE".
8. FOOTING CONFLICTS WITH EXISTING TRAFFIC CONTROL CONDUIT HAVE BEEN ADDRESSED ON CIVIL "TRAFFIC SIGNAL INSTALLATION" SHEET.

EXISTING UTILITY LEGEND:

⟨1⟩	ELECTRICAL CONDUIT	⟨4⟩	TELECOMMUNICATIONS CONDUIT
⟨2⟩	SEWER LINE	⟨5⟩	TRAFFIC CONTROL CONDUIT (SEE CIVIL PLANS)
⟨3⟩	STORM DRAIN	⟨6⟩	WATER LINE

PILE DATA TABLE

LOCATION	PILE TYPE	NOMINAL RESISTANCE (kips)		CUT OFF ELEVATION (FEET)	DESIGN TIP ELEVATION (FEET)	SPECIFIED TIP ELEVATION (FEET)
		COMPRESSION	TENSION			
ABUTMENT 1	24"ø CIDH	210	0	655.82'	623.00' (a) 628.00' (b) 625.50' (c)	623.00'
BENT 2	66"ø CIDH	760	0	650.00'	608.00' (a) 617.00' (b) 609.00' (c)	608.00'
BENT 3	66"ø CIDH	850	0	657.00'	618.00' (a) 627.00' (b) 606.50' (c)	606.50'
BENT 4	66"ø CIDH	930	0	662.00'	616.00' (a) 625.00' (b) 618.00' (c)	616.00'

NOTE: DESIGN TIP ELEVATIONS ARE CONTROLLED BY: (a) COMPRESSION (b) SETTLEMENT (c) LATERAL

NOTE: CONTRACTOR SHALL VERIFY ALL CONTROLLING FIELD DIMENSIONS BEFORE ORDERING OR FABRICATING ANY MATERIAL.

SPREAD FOOTING DATA TABLE

SUPPORT LOCATION	WORKING STRESS DESIGN (WSD)		LOAD AND RESISTANCE FACTOR DESIGN (LRFD)		
	PERMISSIBLE GROSS CONTACT STRESS (SETTLEMENT) (ksf)	ALLOWABLE GROSS BEARING CAPACITY (ksf)	SERVICE PERMISSIBLE NET CONTACT STRESS (SETTLEMENT)	STRENGTH FACTORED GROSS NOMINAL BEARING RESISTANCE	EXTREME EVENT FACTORED GROSS NOMINAL BEARING RESISTANCE
ABUTMENT 1 RET. WALLS	N/A	3.5	N/A (ksf)	∅b = N/A 0.45 (ksf)	∅b = N/A 1.00 (ksf)
BENT 5	N/A	N/A	8.0	10.8	24.0
ABUTMENT 6	8.0	6.0	N/A	N/A	N/A
ABUTMENT 6 RET. WALLS	N/A	3.5	N/A	N/A	N/A

BENCHMARK

NEBP RANCHO CARMEL DRIVE AND SHOAL CREEK DRIVE ELEV 589.61 MSL BASED ON NGVD 29 FEET AS SHOWN IN THE CITY OF SAN DIEGO BENCH BOOK.

REGISTERED PROFESSIONAL ENGINEER — Craig Shannon No. 66998 Exp. 9-30-12 CIVIL — STATE OF CALIFORNIA

SIMON WONG ENGINEERING
9968 Hibert Street, Second Floor
San Diego, CA 92131
(858) 566-3113
Job No. 500-773
Craig Shannon DATE: 4-1-11
PREPARED BY: CRAIG SHANNON R.C.E. NO. 66998
REGISTRATION EXPIRES: 09/30/12

CITY CONTRACT
SPECIFICATION NO. 4885 CITY CONTRACT, CIP NO. S-00941
PLANS FOR THE CONSTRUCTION OF:
TED WILLIAMS PARKWAY PEDESTRIAN OVERCROSSING AT SHOAL CREEK DRIVE
FOUNDATION PLAN

CITY OF SAN DIEGO, CALIFORNIA
ENGINEERING AND CAPITAL PROJECTS DEPARTMENT
SHEET 13 OF 45 SHEETS

W.O. NO. S-00941

A. Palaseyed 4/7/2011
FOR CITY ENGINEER — DATE

A. PALASEYED, SECTION HEAD
M. KOLL, PROJECT MANAGER

DESCRIPTION	BY	APPROVED	DATE	FILMED
ORIGINAL	SWE			

NAD 83
292-1743 LAMBERT COORDINATES

CONTRACTOR _____ DATE STARTED _____
INSPECTOR _____ DATE COMPLETED _____

35490-13-D

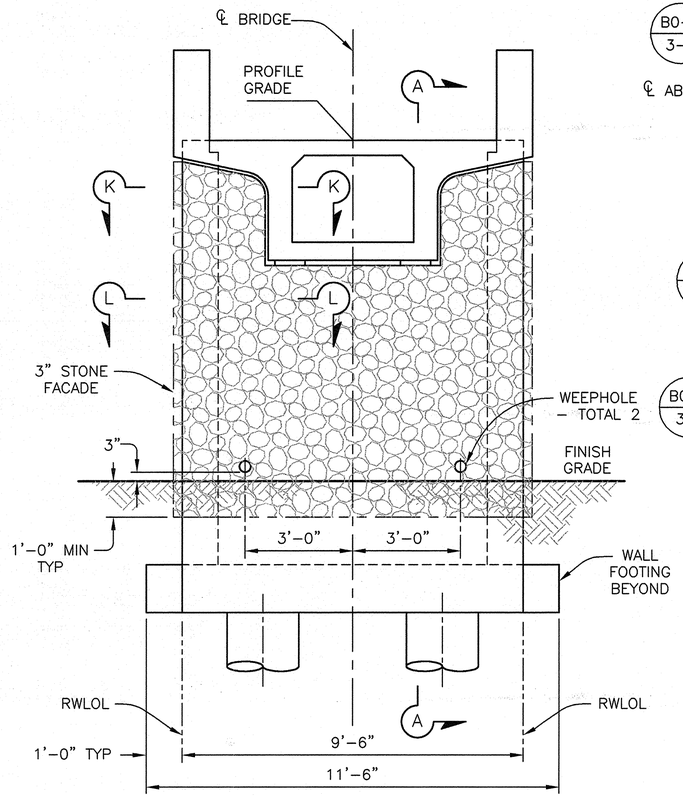

NOTE: RAILINGS NOT SHOWN FOR CLARITY.

FRONT ELEVATION

1/2" = 1'–0"

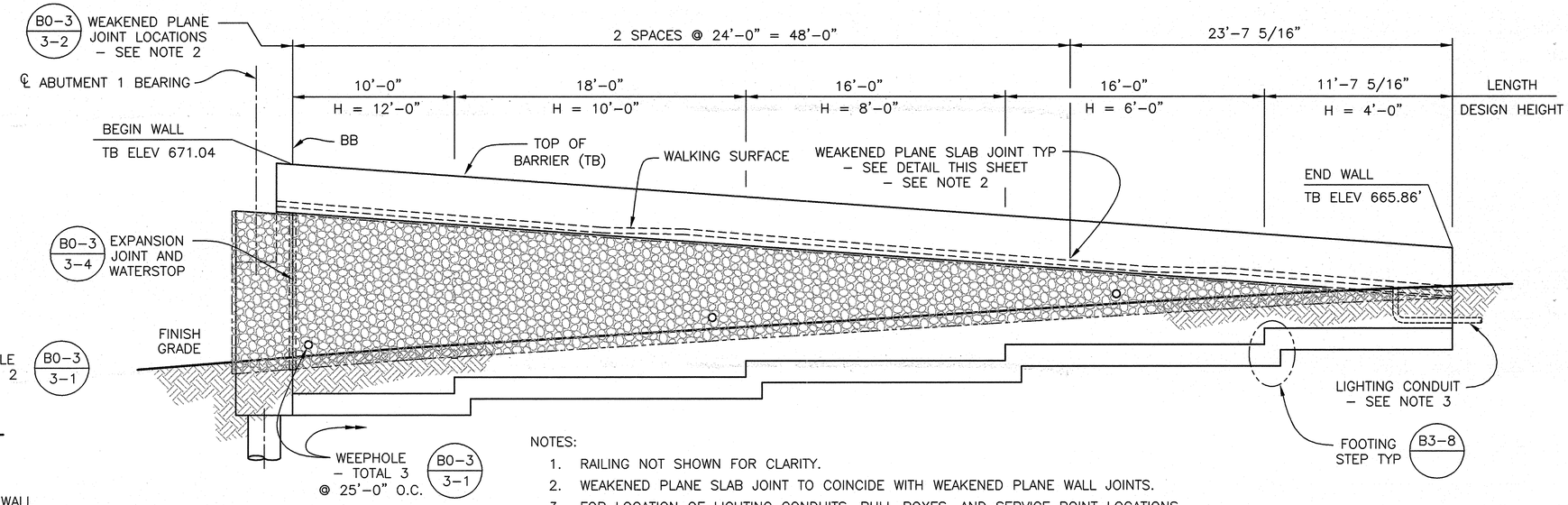

NOTES:

1. RAILING NOT SHOWN FOR CLARITY.
2. WEAKENED PLANE SLAB JOINT TO COINCIDE WITH WEAKENED PLANE WALL JOINTS.
3. FOR LOCATION OF LIGHTING CONDUITS, PULL BOXES, AND SERVICE POINT LOCATIONS, SEE "ELECTRICAL SITE PLAN" SHEET.

SIDE ELEVATION

1/4" = 1'–0"

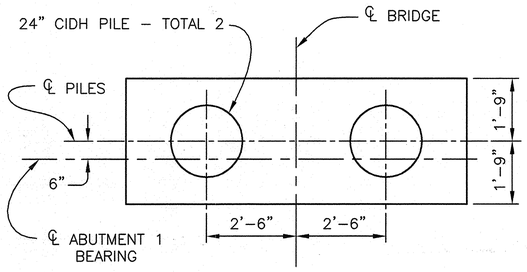

PILE LAYOUT

1/2" = 1'–0"

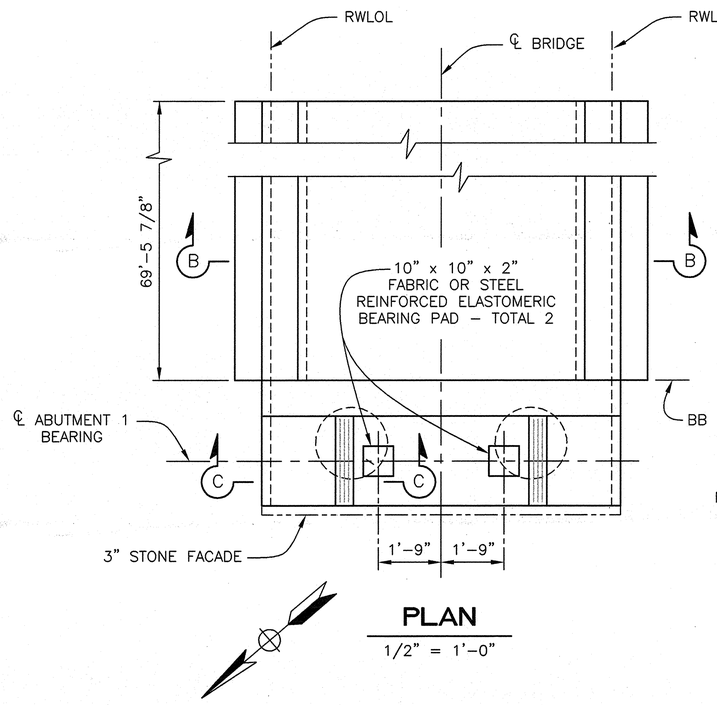

PLAN

1/2" = 1'–0"

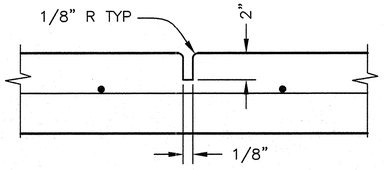

NOTE: CUT OR BREAK EVERY OTHER REINFORCING BAR CROSSING JOINT.

WEAKENED PLANE SLAB JOINT DETAIL

NO SCALE

NOTE: CONTRACTOR SHALL VERIFY ALL CONTROLLING FIELD DIMENSIONS BEFORE ORDERING OR FABRICATING ANY MATERIAL.

NOTE: FOR SECTIONS A–A, B–B, AND C–C, SEE "ABUTMENT DETAILS NO. 1" SHEET. FOR SECTIONS K–K AND L–L, SEE "ABUTMENT DETAILS NO. 3" SHEET.

REGISTERED PROFESSIONAL ENGINEER — Craig Shannon — No. 66998 — Exp. 9-30-12 — CIVIL — STATE OF CALIFORNIA

SIMON WONG ENGINEERING
9968 Hibert Street, Second Floor
San Diego, CA 92131
(858) 566-3113
Job No. 500-773
Craig Shannon DATE: 4-1-11
PREPARED BY: CRAIG SHANNON R.C.E. NO. 66998
REGISTRATION EXPIRES: 09/30/12

CITY CONTRACT
SPECIFICATION NO. 4885 CITY CONTRACT, CIP NO. S-00941
PLANS FOR THE CONSTRUCTION OF:
TED WILLIAMS PARKWAY PEDESTRIAN OVERCROSSING AT SHOAL CREEK DRIVE
ABUTMENT 1 LAYOUT

CITY OF SAN DIEGO, CALIFORNIA
ENGINEERING AND CAPITAL PROJECTS DEPARTMENT
SHEET 14 OF 46 SHEETS

A. Palaseyed 4/7/2011
FOR CITY ENGINEER DATE

DESCRIPTION	BY	APPROVED	DATE	FILMED
ORIGINAL	SWE			

W.O. NO. S-00941
A. PALASEYED SECTION HEAD
M. KOLL PROJECT MANAGER
NAD 83
292-1743 LAMBERT COORDINATES
CONTRACTOR DATE STARTED
INSPECTOR DATE COMPLETED
35490-14-D

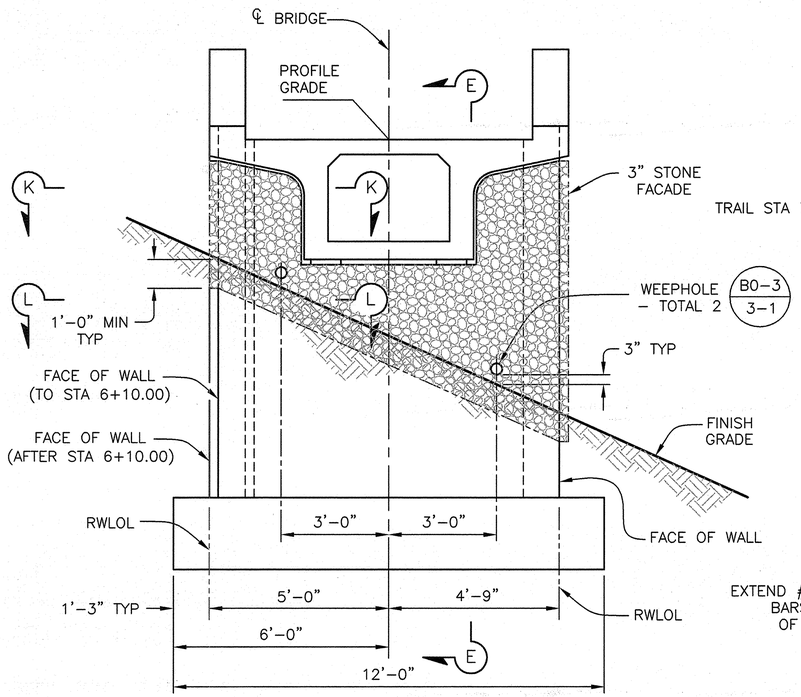

FRONT ELEVATION

1/2" = 1'–0"

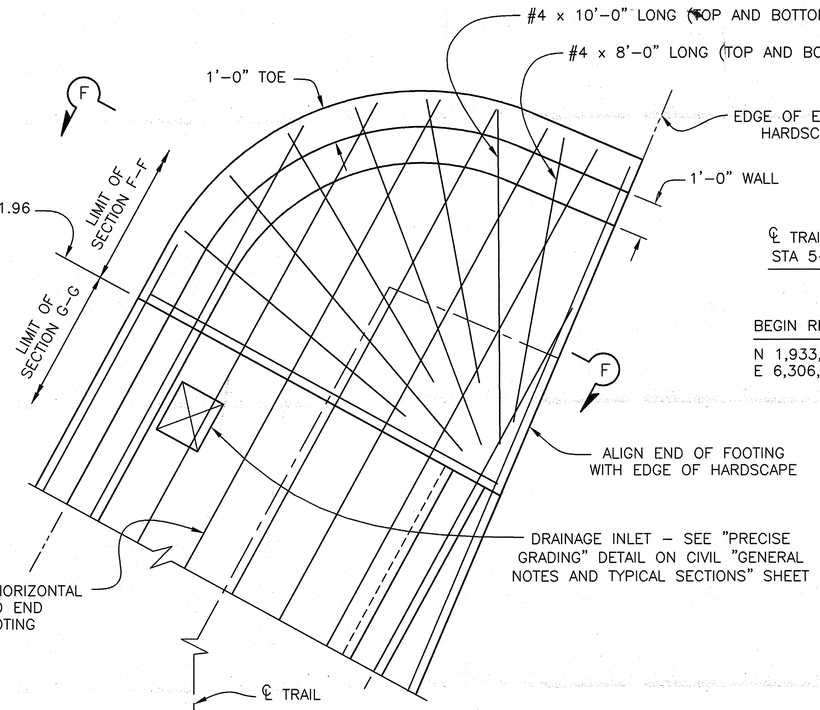

PLAN

1/2" = 1'–0"

NOTE: BARRIER NOT SHOWN FOR CLARITY.

NOTE: CONTRACTOR SHALL VERIFY ALL CONTROLLING FIELD DIMENSIONS BEFORE ORDERING OR FABRICATING ANY MATERIAL.

NOTE: FOR SECTIONS E–E, F–F, AND G–G, SEE "ABUTMENT DETAILS NO. 2" SHEET. FOR SECTION C–C, SEE "ABUTMENT DETAILS NO. 1" SHEET. FOR SECTIONS J–J, K–K, AND L–L, SEE "ABUTMENT DETAILS NO. 3" SHEET.

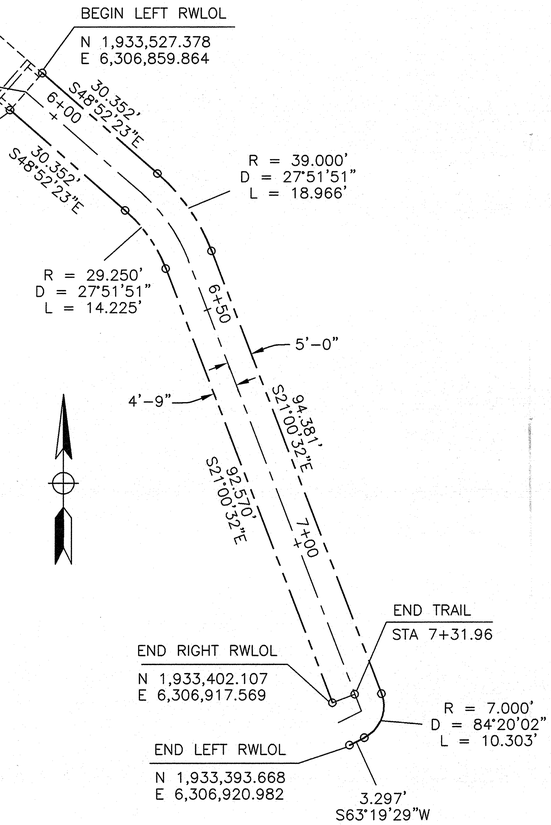

ABUTMENT 6 RETAINING WALL LAYOUT LINE GEOMETRY

NO SCALE

REGISTERED PROFESSIONAL ENGINEER
Craig Shannon
No. 66998
Exp. 9-30-12
CIVIL
STATE OF CALIFORNIA

CITY CONTRACT

SPECIFICATION NO. 4885 CITY CONTRACT, CIP NO. S-00941

PLANS FOR THE CONSTRUCTION OF:

TED WILLIAMS PARKWAY PEDESTRIAN OVERCROSSING AT SHOAL CREEK DRIVE

ABUTMENT 6 LAYOUT 1 OF 2

CITY OF SAN DIEGO, CALIFORNIA
ENGINEERING AND CAPITAL PROJECTS DEPARTMENT
SHEET 15 OF 48 SHEETS

W.O. NO. S-00941

A. Palaseyed 4/7/2011
FOR CITY ENGINEER DATE

DESCRIPTION	BY	APPROVED	DATE	FILMED
ORIGINAL	SWE			

A. PALASEYED
SECTION HEAD

M. KOLL
PROJECT MANAGER

NAD 83
292–1743
LAMBERT COORDINATES

35490-15-D

SIMON WONG ENGINEERING
9968 Hibert Street, Second Floor
San Diego, CA 92131
(858) 566-3113

Job No. 500-773

Craig Shannon DATE: 4-1-11
PREPARED BY: CRAIG SHANNON R.C.E. NO. 66998
REGISTRATION EXPIRES: 09/30/12

CONTRACTOR _____ DATE STARTED _____
INSPECTOR _____ DATE COMPLETED _____

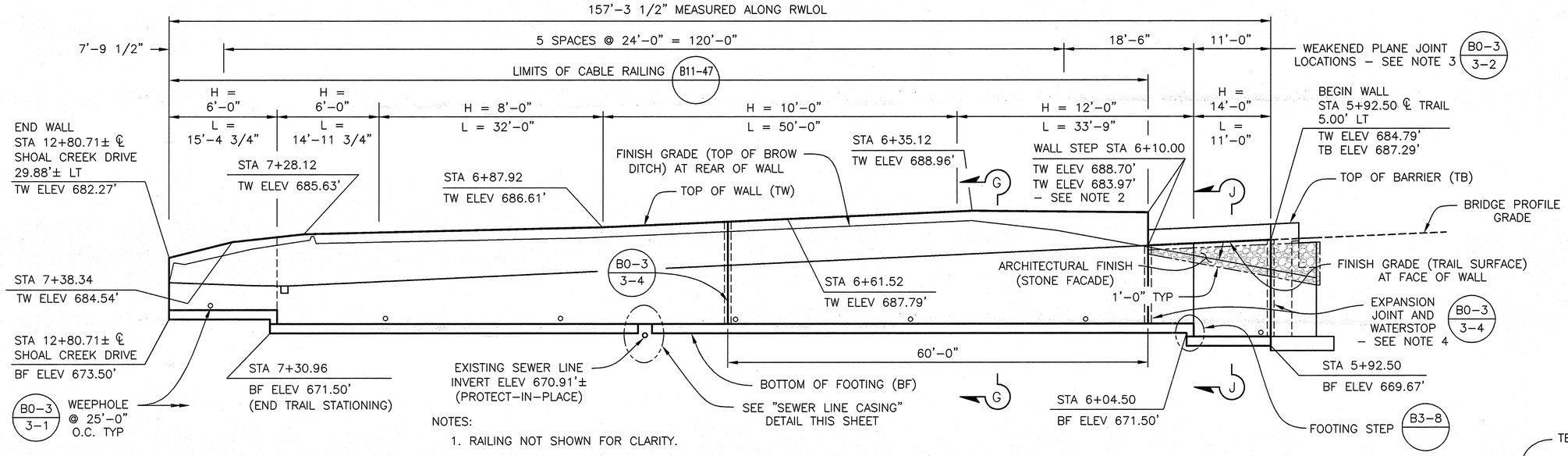

NOTES:

1. RAILING NOT SHOWN FOR CLARITY.
2. FACE OF WALL SHIFTS 3" AT STA 6+10.00 SEE PLAN VIEW ON "ABUTMENT 6 LAYOUT 1 OF 2" SHEET.
3. WEAKENED PLANE SLAB JOINT TO COINCIDE WITH WEAKENED PLANE WALL JOINTS - SEE "WEAKENED PLANE SLAB JOINT DETAIL" ON "ABUTMENT 1 LAYOUT" SHEET.
4. BARRIER JOINT TO MATCH WALL JOINT TYP.

LEFT SIDE DEVELOPED ELEVATION

1/8" = 1'-0"

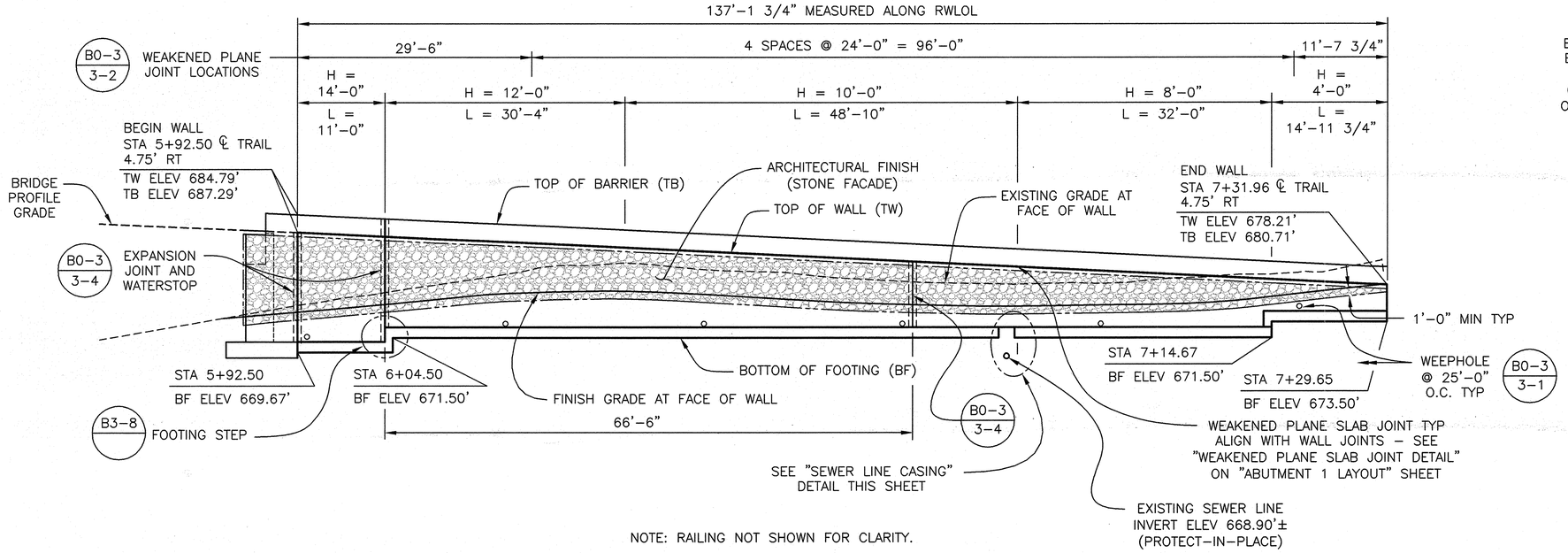

NOTE: RAILING NOT SHOWN FOR CLARITY.

RIGHT SIDE DEVELOPED ELEVATION

1/8" = 1'-0"

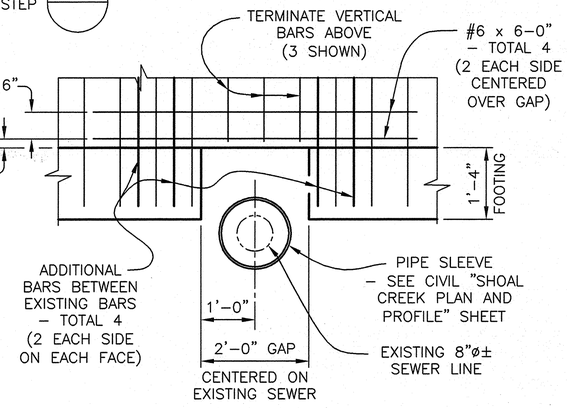

SEWER LINE CASING

3/4" = 1'-0"

NOTE: CONTRACTOR SHALL VERIFY ALL CONTROLLING FIELD DIMENSIONS BEFORE ORDERING OR FABRICATING ANY MATERIAL.

NOTE: FOR SECTION G-G SEE "ABUTMENT DETAILS NO. 2" SHEET.
FOR SECTION J-J, SEE "ABUTMENT DETAILS NO. 3" SHEET.

REGISTERED PROFESSIONAL ENGINEER — Craig Shannon — No. 66998 — Exp. 9-30-12 — CIVIL — STATE OF CALIFORNIA

SIMON WONG ENGINEERING
9968 Hibert Street, Second Floor
San Diego, CA 92131
(858) 566-3113
Job No. 500-773
Craig Shannon DATE: 4-1-11
PREPARED BY: CRAIG SHANNON R.C.E. NO. 66998
REGISTRATION EXPIRES: 09/30/12

CITY CONTRACT
SPECIFICATION NO. 4885 CITY CONTRACT, CIP NO. S-00941
PLANS FOR THE CONSTRUCTION OF:
TED WILLIAMS PARKWAY PEDESTRIAN OVERCROSSING AT SHOAL CREEK DRIVE
ABUTMENT 6 LAYOUT 2 OF 2

CITY OF SAN DIEGO, CALIFORNIA
ENGINEERING AND CAPITAL PROJECTS DEPARTMENT
SHEET 16 OF 46 SHEETS

W.O. NO. S-00941

A. Palaseyed FOR CITY ENGINEER 4/7/2011 DATE

DESCRIPTION	BY	APPROVED	DATE	FILMED
ORIGINAL	SWE			

A. PALASEYED SECTION HEAD
M. KOLL PROJECT MANAGER
NAD 83
292-1743 LAMBERT COORDINATES
CONTRACTOR DATE STARTED
INSPECTOR DATE COMPLETED
35490-16-D

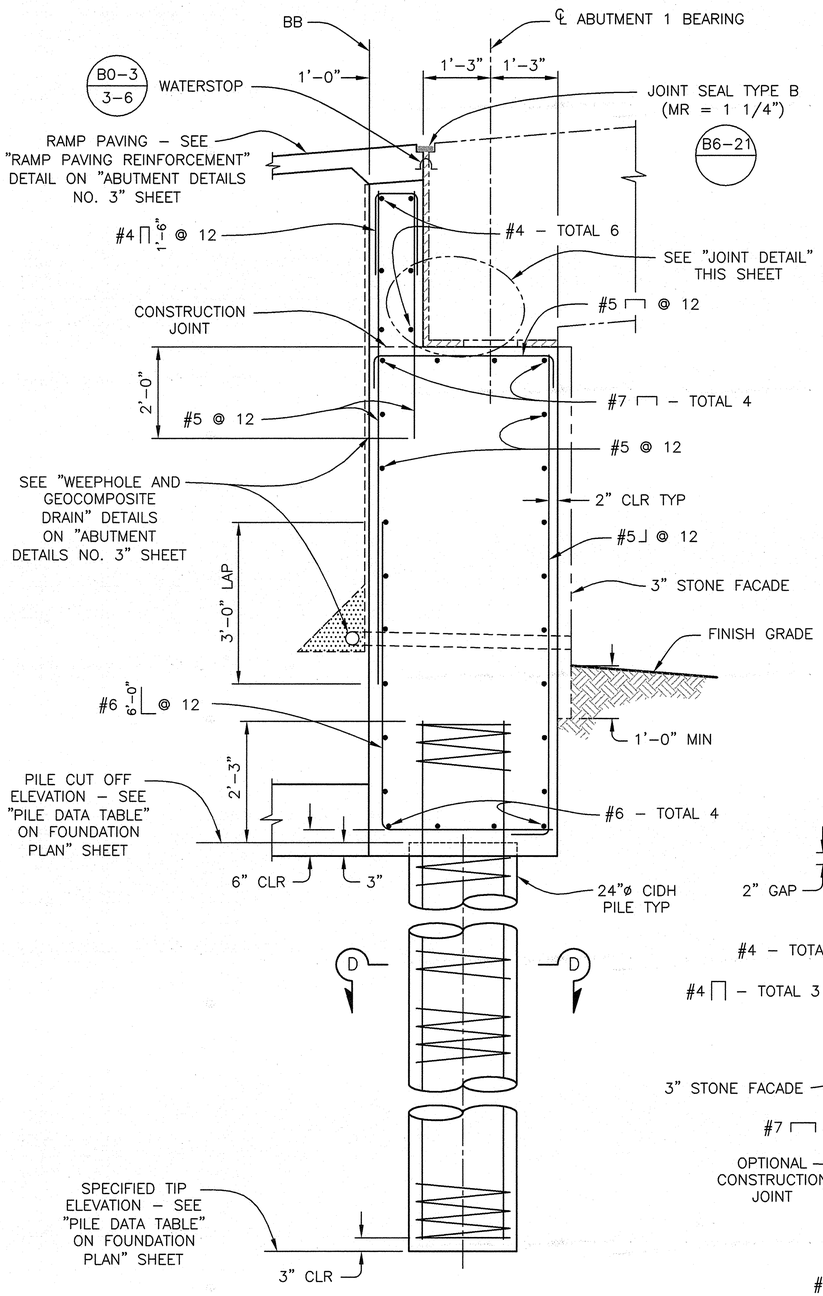

SECTION A-A

3/4" = 1'-0"

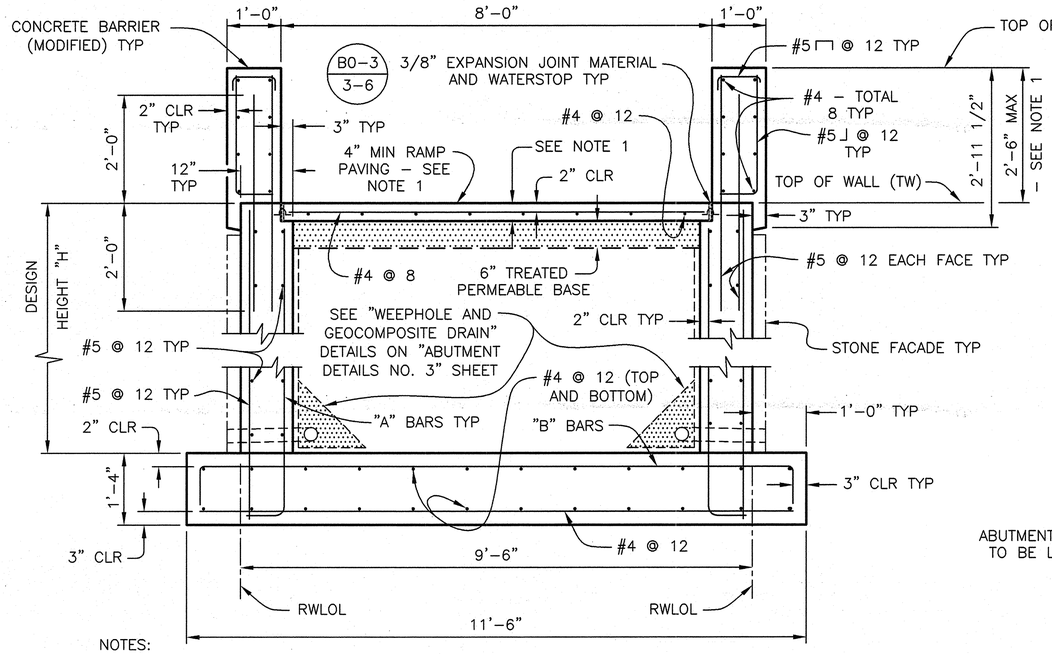

NOTES:

1. DIMENSION MAY VARY TO ACCOMMODATE LANDINGS. SEE "DECK CONTOURS" SHEET FOR RAMP ELEVATIONS.
2. RAILINGS NOT SHOWN FOR CLARITY.
3. WALKING SURFACE SHALL BE BROOM FINISHED AND SLIP RESISTANT.

SECTION B-B

3/4" = 1'-0"

DESIGN HEIGHT "H"	"A" BARS	"B" BARS
4'-0"	#5 @ 12	#5 @ 12
6'-0"	#5 @ 12	#5 @ 12
8'-0"	#5 @ 12	#5 @ 12
10'-0"	#6 @ 16	#6 @ 16
12'-0"	#6 @ 8	#6 @ 8

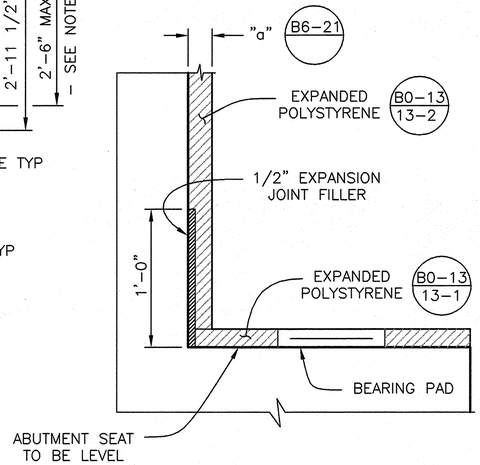

JOINT DETAIL

NO SCALE

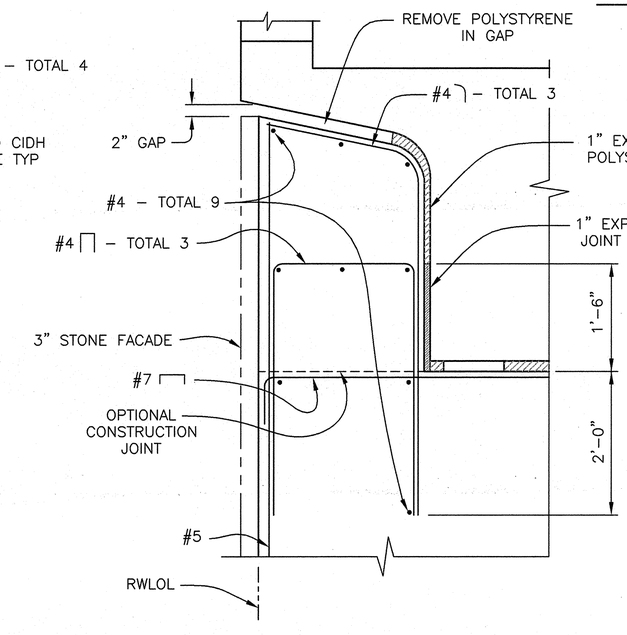

NOTE: NOT ALL ABUTMENT REINFORCEMENT SHOWN.

SECTION C-C

1" = 1'-0"

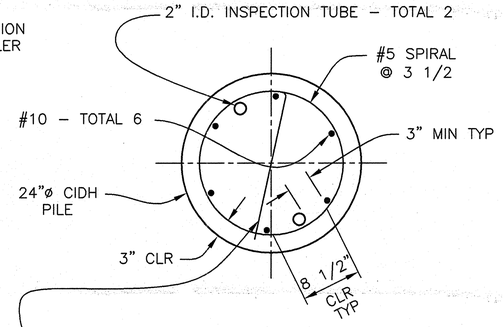

EACH END OF SPIRAL SHALL CONTAIN A FULL EXTRA TURN PLUS A TAIL EQUAL TO THE DIAMETER OF THE CAGE ANCHORED IN THE CONCRETE CORE

SECTION D-D

1" = 1'-0"

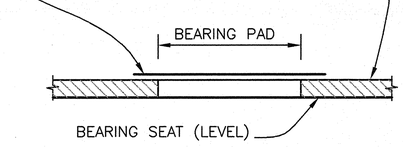

BEARING PAD DETAIL

NO SCALE

NOTE: CONTRACTOR SHALL VERIFY ALL CONTROLLING FIELD DIMENSIONS BEFORE ORDERING OR FABRICATING ANY MATERIAL.

NOTE: FOR LOCATIONS OF SECTIONS A-A, B-B, AND C-C, SEE "ABUTMENT 1 LAYOUT" AND "ABUTMENT 6 LAYOUT" SHEETS.

SIMON WONG ENGINEERING
9968 Hibert Street, Second Floor
San Diego, CA 92131
(858) 566-3113
Job No. 500-773
Craig Shannon DATE: 4-1-11
PREPARED BY: CRAIG SHANNON R.C.E. NO. 66998
REGISTRATION EXPIRES: 09/30/12

Craig Shannon No. 66998 Exp. 9-30-12 CIVIL STATE OF CALIFORNIA REGISTERED PROFESSIONAL ENGINEER

CITY CONTRACT

SPECIFICATION NO. 4885 CITY CONTRACT, CIP NO. S-00941

PLANS FOR THE CONSTRUCTION OF:

TED WILLIAMS PARKWAY PEDESTRIAN OVERCROSSING AT SHOAL CREEK DRIVE

ABUTMENT DETAILS NO. 1

CITY OF SAN DIEGO, CALIFORNIA
ENGINEERING AND CAPITAL PROJECTS DEPARTMENT
SHEET 17 OF 46 SHEETS

W.O. NO. S-00941

A. Palaseyed 4/7/2011
FOR CITY ENGINEER DATE

A. PALASEYED, SECTION HEAD
M. KOLL, PROJECT MANAGER

DESCRIPTION	BY	APPROVED	DATE	FILED
ORIGINAL	SWE			

HRD 83
292-1743
LAMBERT COORDINATES

CONTRACTOR _____ DATE STARTED _____
INSPECTOR _____ DATE COMPLETED _____

35490-17-D

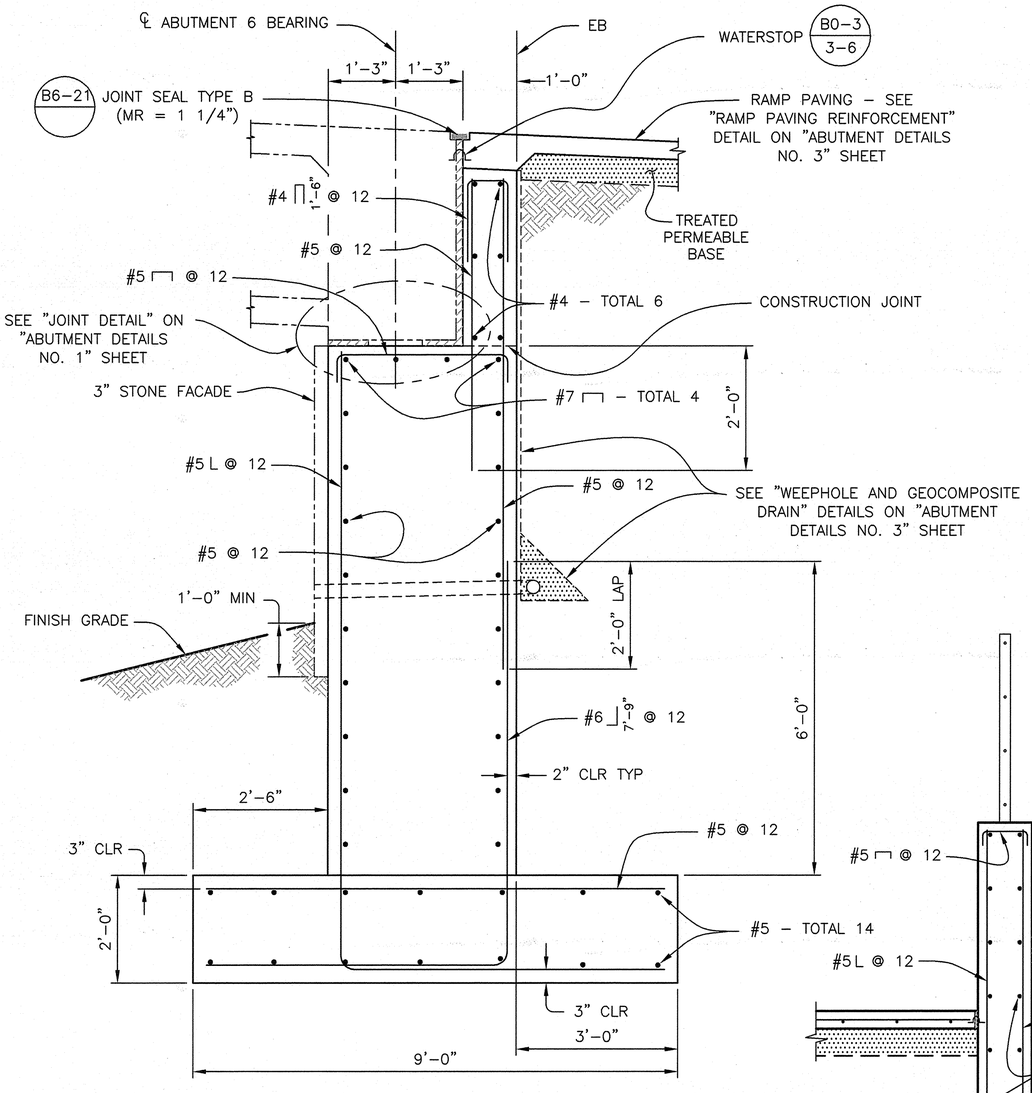

SECTION E-E

3/4" = 1'–0"

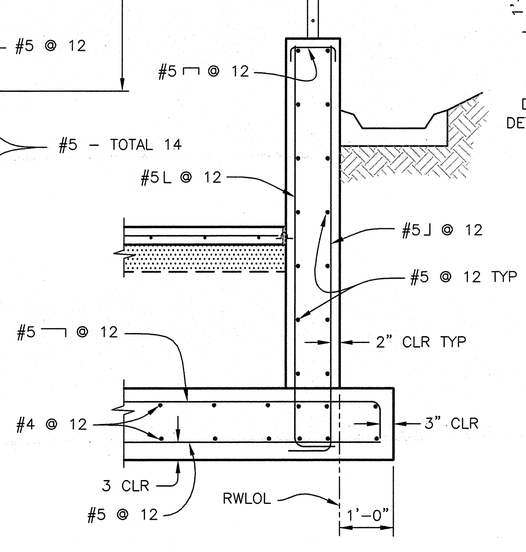

SECTION F-F

3/4" = 1'–0"

NOTE: FOR INFORMATION NOT SHOWN, SEE SECTION G–G.

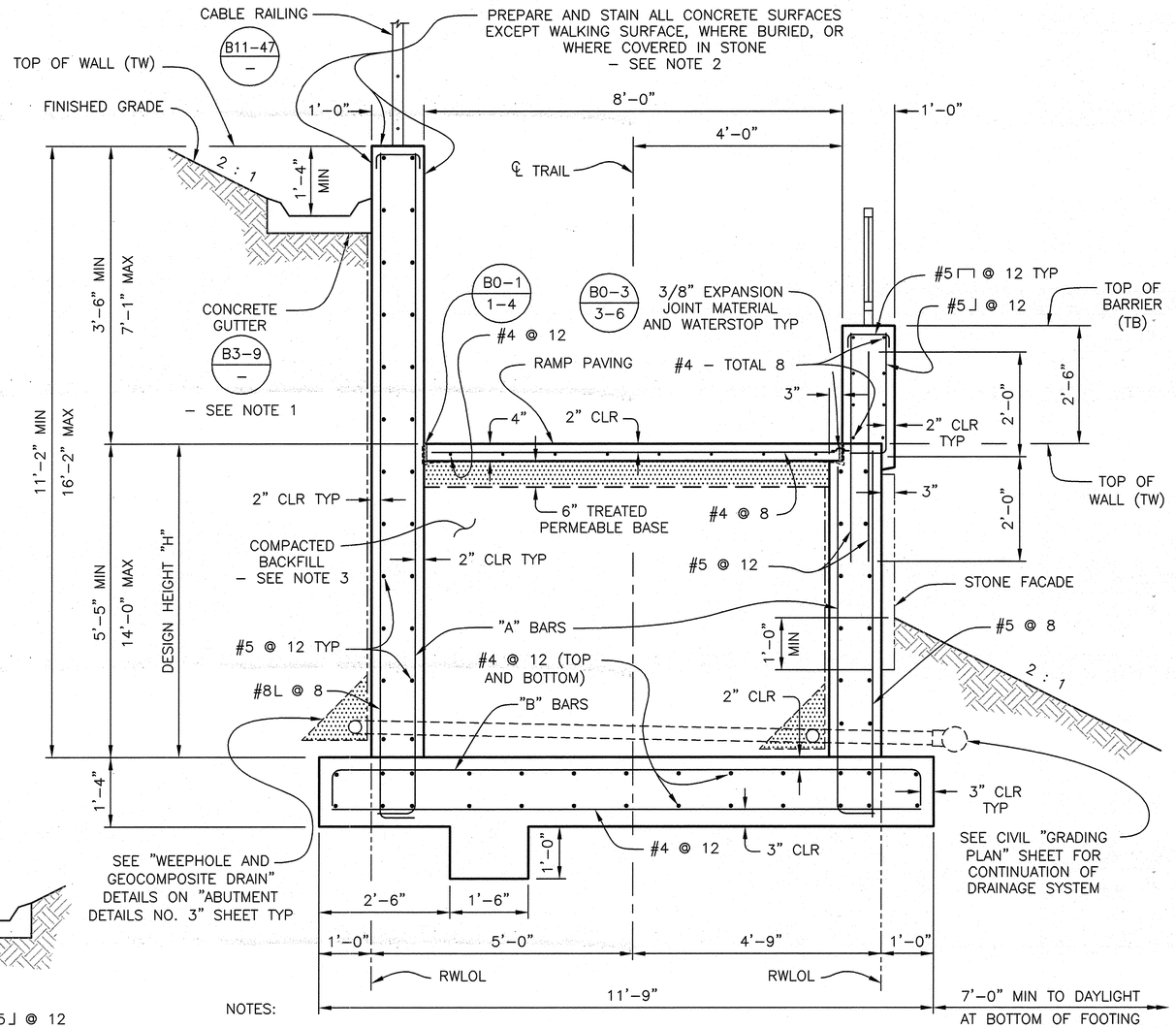

SECTION G-G

3/4" = 1'–0"

NOTES:

1. SEE CIVIL "GRADING PLAN" SHEET FOR DRAINAGE GUTTER LOCATION AND OTHER DETAILS.
2. LIMITS OF CONRETE STAINING SHALL EXTEND ONE FOOT BELOW FINISHED GRADE WHERE BURIED. ALL STAINED SURFACES SHALL BE PROTECTED WITH ANTI–GRAFFITI COATING.
3. BACKFILL TO BE PLACED WITHIN ONE FOOT OF FINISHED GRADE UNDER RAMP SLAB PRIOR TO REMAINING BACKFILL.
4. WALKING SURFACE SHALL BE BROOM FINISHED AND SLIP RESISTANT.

DESIGN HEIGHT "H"	"A" BARS	"B" BARS
6'–0"	#5 ⌋ @ 12	#5 ⌐ @ 12
8'–0"	#5 ⌋ @ 12	#5 ⌐ @ 12
10'–0"	#6 ⌋ @ 16	#6 ⌐ @ 16
12'–0"	#6 ⌋ @ 8	#6 ⌐ @ 8
14'–0"	#8 ⌋ @ 8	#8 ⌐ @ 8

NOTE: CONTRACTOR SHALL VERIFY ALL CONTROLLING FIELD DIMENSIONS BEFORE ORDERING OR FABRICATING ANY MATERIAL.

NOTE: FOR LOCATION OF SECTIONS E–E AND F–F, SEE "ABUTMENT 6 LAYOUT 1 OF 2" SHEET. FOR LOCATION OF SECTION G–G, SEE "ABUTMENT 6 LAYOUT 2 OF 2" SHEET.

REGISTERED PROFESSIONAL ENGINEER — Craig Shannon — No. 66998 — Exp. 9-30-12 — CIVIL — STATE OF CALIFORNIA

SIMON WONG ENGINEERING
9968 Hibert Street, Second Floor
San Diego, CA 92131
(858) 566–3113
Job No. 500–773
Craig Shannon DATE: 4-1-11
PREPARED BY: CRAIG SHANNON R.C.E. NO. 66998
REGISTRATION EXPIRES: 09/30/12

CITY CONTRACT

SPECIFICATION NO. 4885 CITY CONTRACT, CIP NO. S–00941

PLANS FOR THE CONSTRUCTION OF:

TED WILLIAMS PARKWAY PEDESTRIAN OVERCROSSING AT SHOAL CREEK DRIVE

ABUTMENT DETAILS NO. 2

CITY OF SAN DIEGO, CALIFORNIA
ENGINEERING AND CAPITAL PROJECTS DEPARTMENT
SHEET 19 OF 46 SHEETS

W.O. NO. S–00941

A. Palaseyed 4/7/2011
FOR CITY ENGINEER — DATE

A. PALASEYED, SECTION HEAD

M. KOLL, PROJECT MANAGER

DESCRIPTION	BY	APPROVED	DATE	FILMED
ORIGINAL	SWE			

NAD 83
292–1743
LAMBERT COORDINATES

CONTRACTOR _____ DATE STARTED _____
INSPECTOR _____ DATE COMPLETED _____

35490-18-D

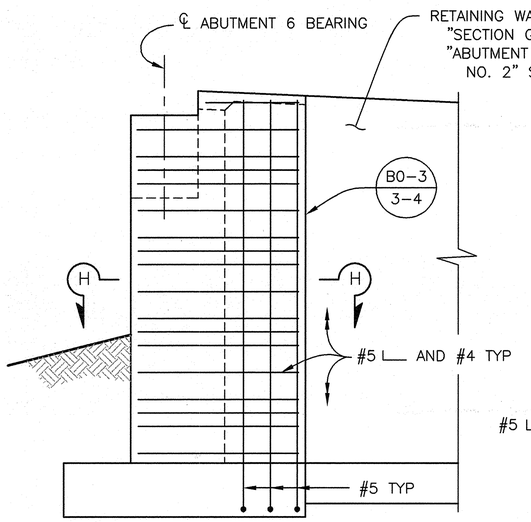

ABUTMENT 6
TYPICAL STEM WALL ELEVATION

3/8" = 1'–0"

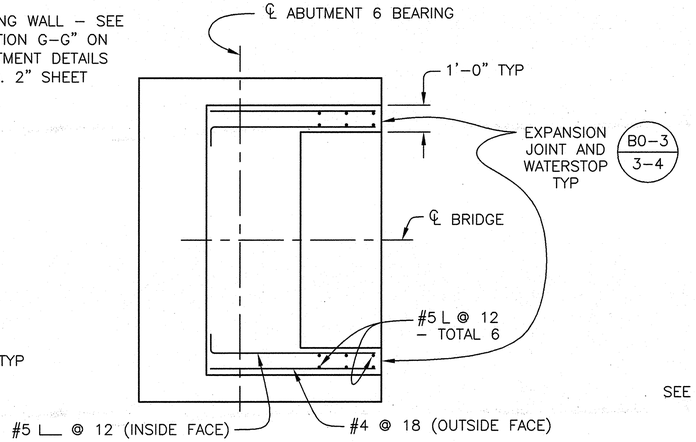

SECTION H-H

3/8" = 1'–0"

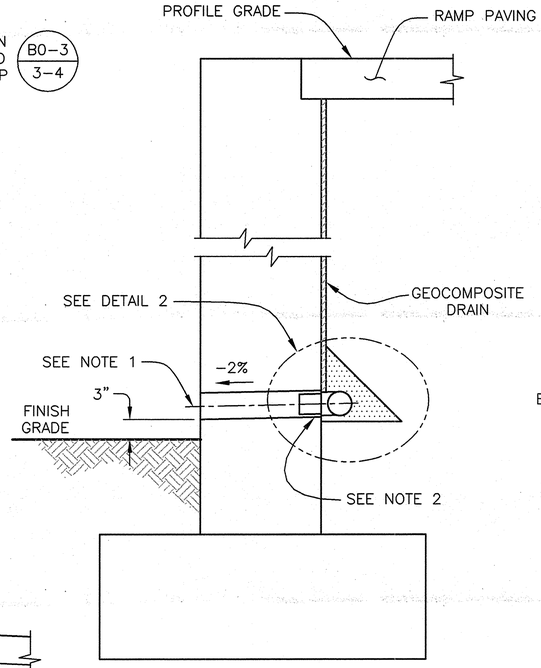

WALL SECTION

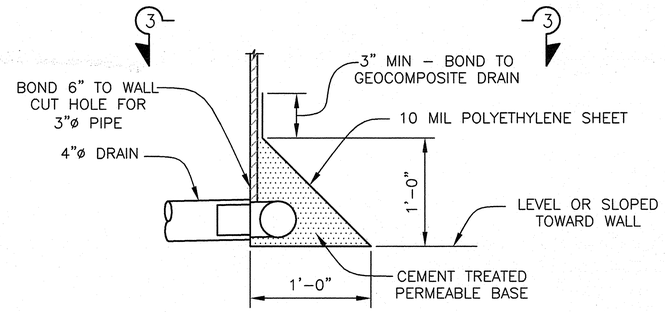

DETAIL A

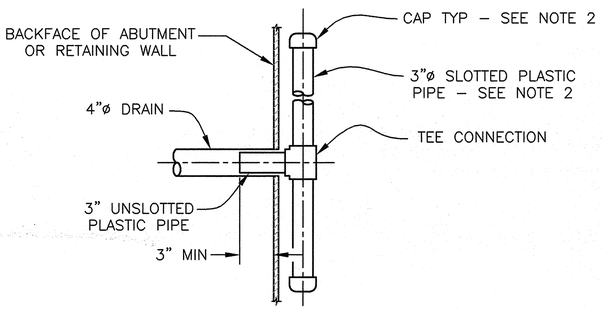

VIEW 3–3

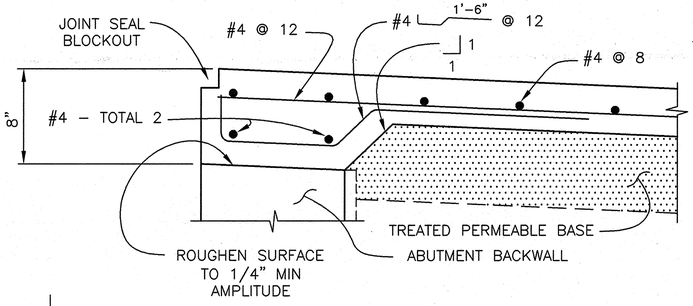

RAMP PAVING REINFORCEMENT

2" = 1'–0"

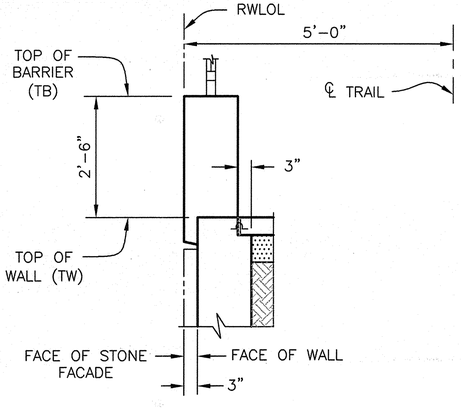

NOTE: REINFORCEMENT NOT SHOWN FOR CLARITY.

SECTION J-J

3/4" = 1'–0"

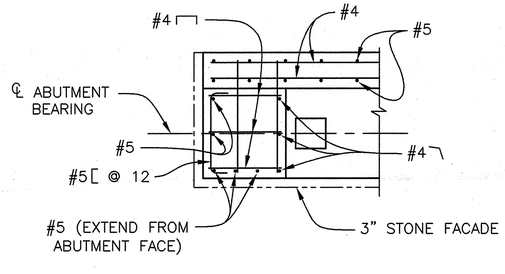

NOTE: ABUTMENT 1 SHOWN, ABUTMENT 6 SIMILAR.

SECTION K-K

1/2" = 1'–0"

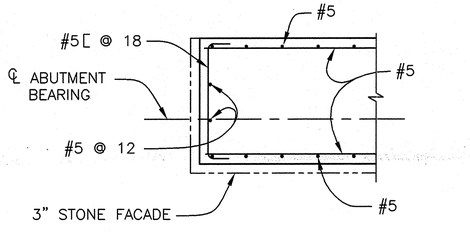

NOTE: ABUTMENT 1 SHOWN, ABUTMENT 6 SIMILAR.

SECTION L-L

1/2" = 1'–0"

NOTES:

1. EXPOSED WALL DRAINS SHALL BE LOCATED 3"± ABOVE FINISHED GRADE.
2. GEOCOMPOSITE DRAIN, CEMENT TREATED PERMEABLE BASE, AND 3"ø SLOTTED PLASTIC PIPE CONTINUOUS BEHIND WALL OR ABUTMENT. CAP ENDS OF PIPE. PROVIDE "TEE" CONNECTION AT EACH 4"ø DRAIN.
3. CONNECT LOW END OF PLASTIC PIPE TO THE MAIN OUTLET PIPE AS APPLICABLE.

WEEPHOLE AND GEOCOMPOSITE DRAIN

NO SCALE

NOTE: CONTRACTOR SHALL VERIFY ALL CONTROLLING FIELD DIMENSIONS BEFORE ORDERING OR FABRICATING ANY MATERIAL.

NOTE: FOR LOCATIONS OF SECTIONS K–K AND L–L, SEE "ABUTMENT 1 LAYOUT" AND "ABUTMENT 6 LAYOUT 1 OF 2" SHEETS. FOR LOCATION OF SECTION J–J, SEE "ABUTMENT 6 LAYOUT 2 OF 2" SHEET.

REGISTERED PROFESSIONAL ENGINEER — Craig Shannon — No. 66998 — Exp. 9-30-12 — CIVIL — STATE OF CALIFORNIA

SIMON WONG ENGINEERING
9968 Hibert Street, Second Floor
San Diego, CA 92131
(858) 566-3113
Job No. 500-773
Craig Shannon DATE: 4-1-11
PREPARED BY: CRAIG SHANNON R.C.E. NO. 66998
REGISTRATION EXPIRES: 09/30/12

CITY CONTRACT

SPECIFICATION NO. 4885 CITY CONTRACT, CIP NO. S-00941

PLANS FOR THE CONSTRUCTION OF:

TED WILLIAMS PARKWAY PEDESTRIAN OVERCROSSING AT SHOAL CREEK DRIVE

ABUTMENT DETAILS NO. 3

CITY OF SAN DIEGO, CALIFORNIA
ENGINEERING AND CAPITAL PROJECTS DEPARTMENT
SHEET 19 OF 46 SHEETS

W.O. NO. S-00941

A. Palaseyed FOR CITY ENGINEER — 4/7/2011 DATE

A. PALASEYED SECTION HEAD

M. KOLL PROJECT MANAGER

DESCRIPTION	BY	APPROVED	DATE	FILMED
ORIGINAL	SWE			

NAD 83
292–1743
LAMBERT COORDINATES

CONTRACTOR _____ DATE STARTED _____
INSPECTOR _____ DATE COMPLETED _____

35490-19-D

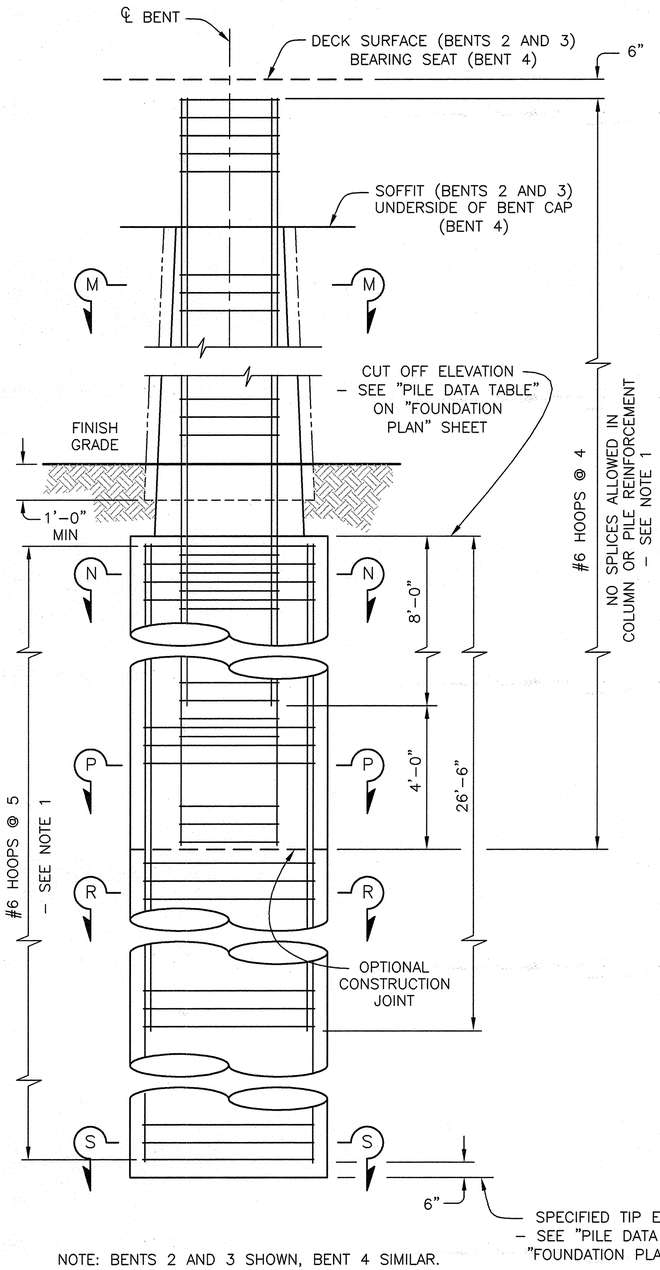

NOTE: BENTS 2 AND 3 SHOWN, BENT 4 SIMILAR.

TYPICAL COLUMN AND PILE REINFORCEMENT BENTS 2, 3, AND 4

1/2" = 1'–0"

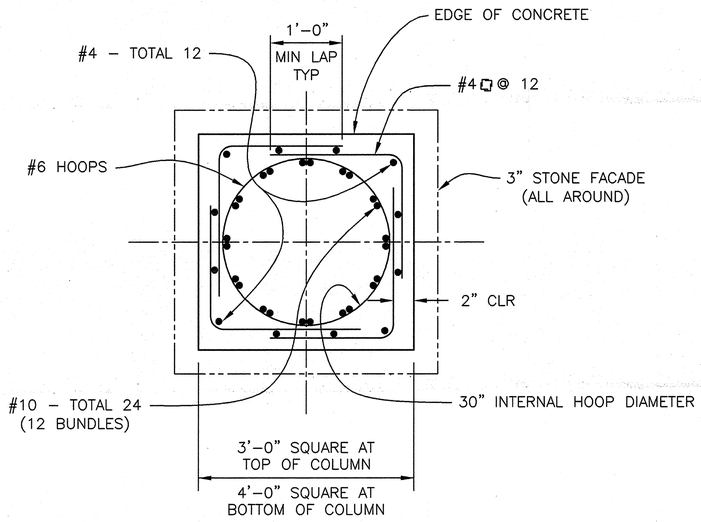

SECTION M-M

1" = 1'–0"

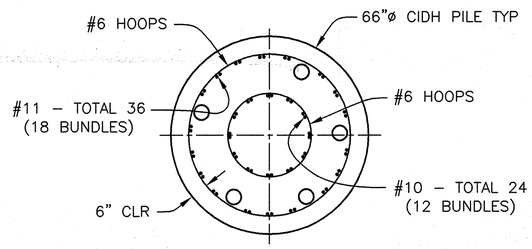

SECTION N-N

1/2" = 1'–0"

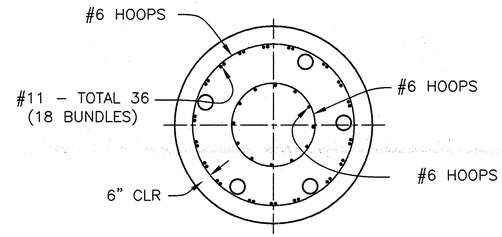

SECTION P-P

1/2" = 1'–0"

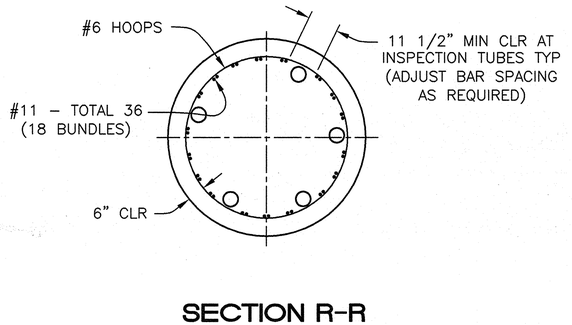

SECTION R-R

1/2" = 1'–0"

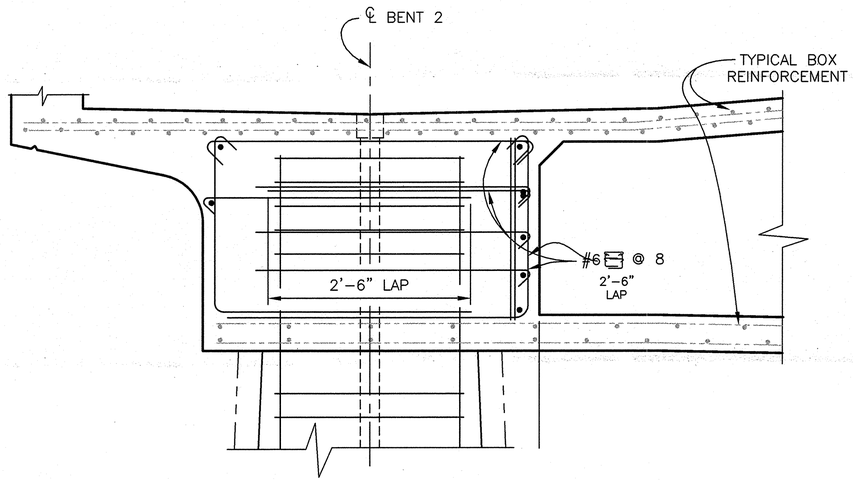

SECTION T-T

1" = 1'–0"

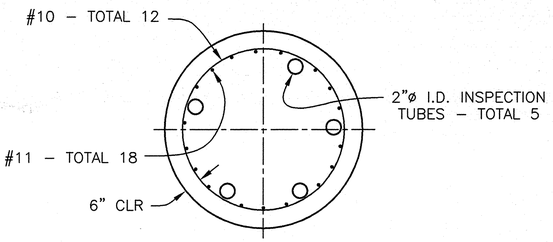

SECTION S-S

1/2" = 1'–0"

NOTE: CONTRACTOR SHALL VERIFY ALL CONTROLLING FIELD DIMENSIONS BEFORE ORDERING OR FABRICATING ANY MATERIAL.

NOTES:

1. HOOPS ARE ULTIMATE BUTT SPLICED CONTINUOUS.
2. FOR LOCATION OF SECTION T–T, SEE "BENT DETAILS NO. 2" SHEET.

REGISTERED PROFESSIONAL ENGINEER — Craig Shannon — No. 66998 — Exp. 9-30-12 — CIVIL — STATE OF CALIFORNIA

SIMON WONG ENGINEERING
9968 Hibert Street, Second Floor
San Diego, CA 92131
(858) 566-3113
Job No. 500-773
Craig Shannon DATE: 4-1-11
PREPARED BY: CRAIG SHANNON R.C.E. NO. 66998
REGISTRATION EXPIRES: 09/30/12

CITY CONTRACT
SPECIFICATION NO. 4885 CITY CONTRACT, CIP NO. S-00941

PLANS FOR THE CONSTRUCTION OF:

TED WILLIAMS PARKWAY PEDESTRIAN OVERCROSSING AT SHOAL CREEK DRIVE

BENT DETAILS NO. 1

CITY OF SAN DIEGO, CALIFORNIA
ENGINEERING AND CAPITAL PROJECTS DEPARTMENT
SHEET 20 OF 46 SHEETS

A. Palaseyed 4/7/2011
FOR CITY ENGINEER DATE

DESCRIPTION	BY	APPROVED	DATE	FILMED
ORIGINAL	SWE			

W.O. NO. S-00941
A. PALASEYED SECTION HEAD
M. KOLL PROJECT MANAGER
NAD 83
292-1743 LAMBERT COORDINATES
CONTRACTOR DATE STARTED
INSPECTOR DATE COMPLETED
35490-20-D

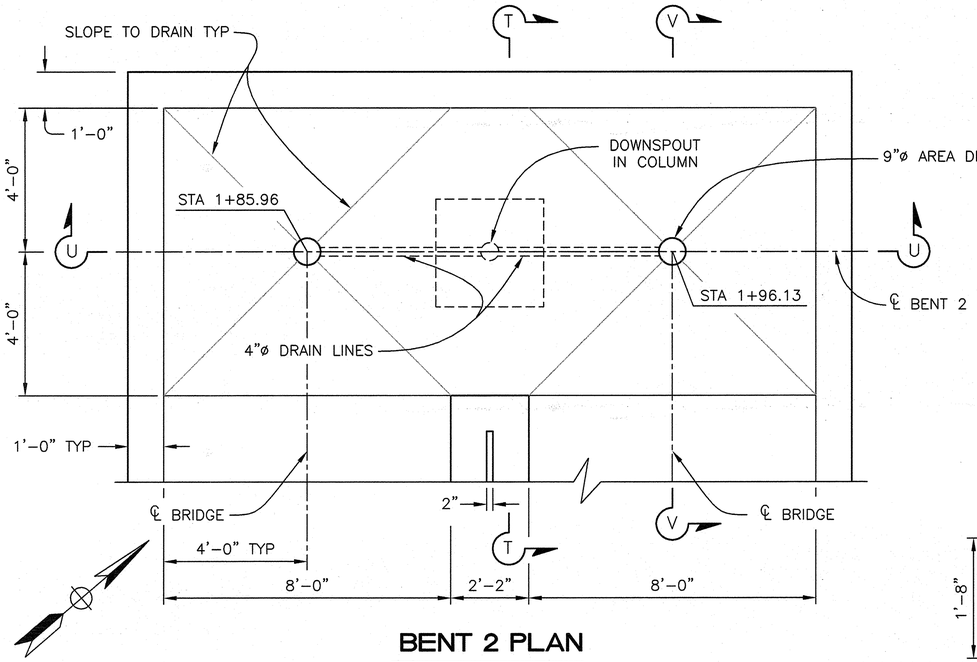

BENT 2 PLAN

1/2" = 1'-0"

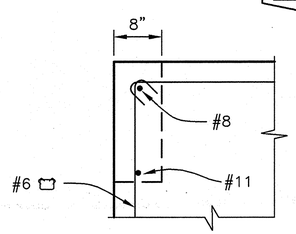

SECTION AT BLOCKOUT

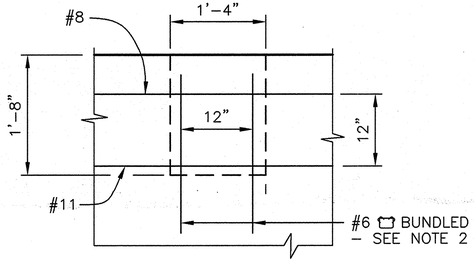

ELEVATION AT BLOCKOUT

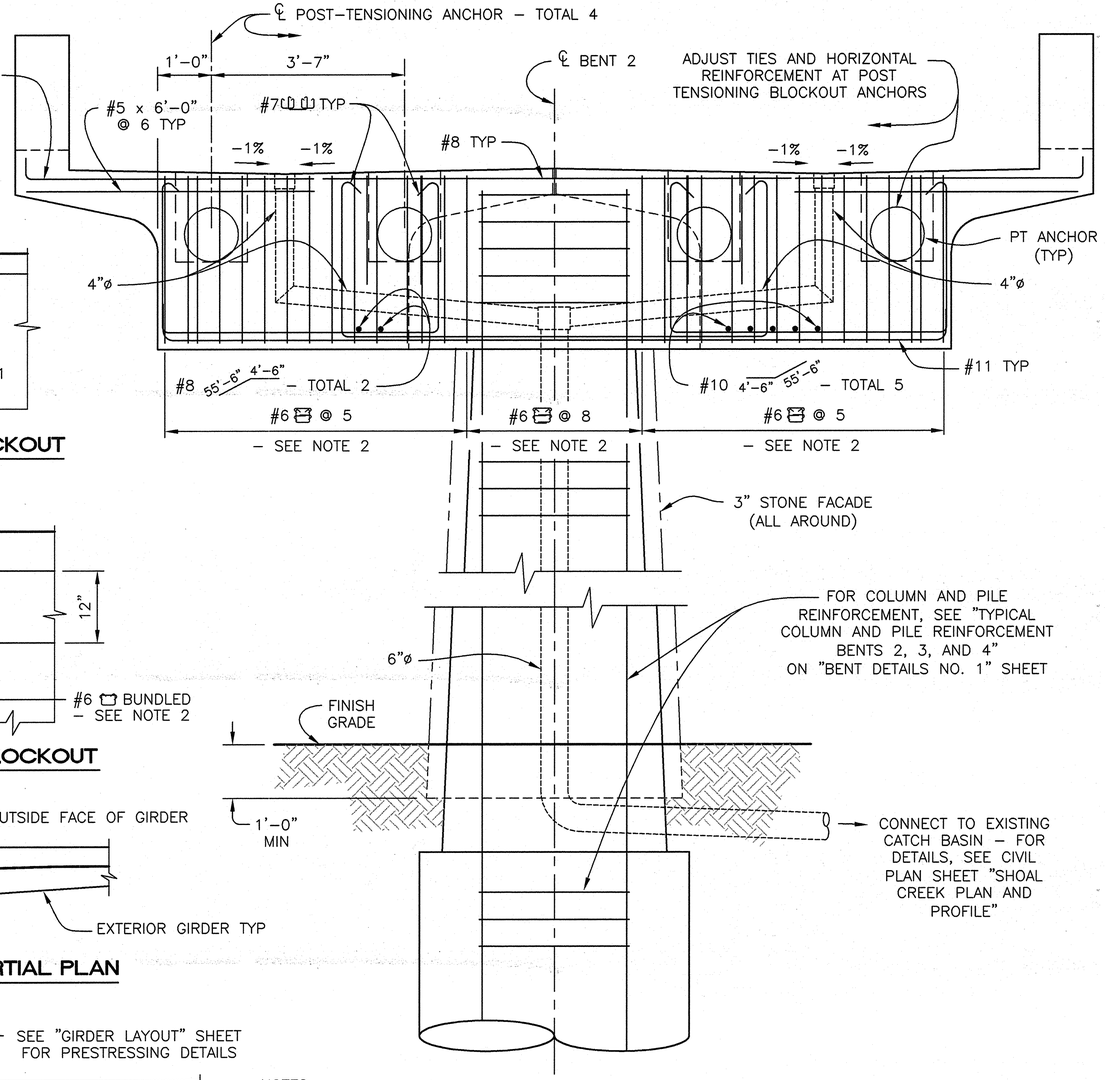

SECTION U–U

3/4" = 1'-0"

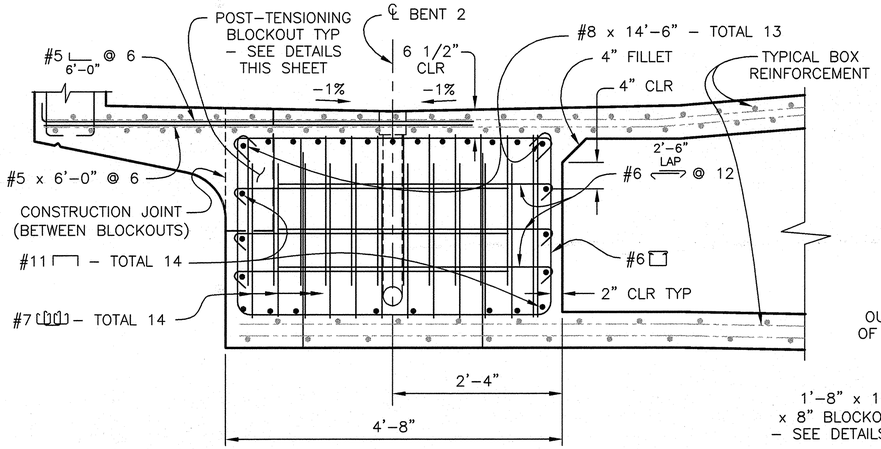

SECTION V–V

1" = 1'-0"

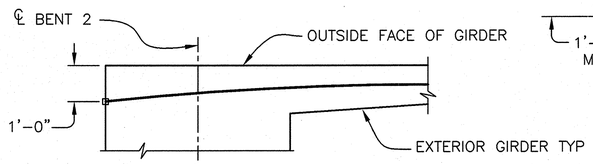

TENDON PATH PARTIAL PLAN

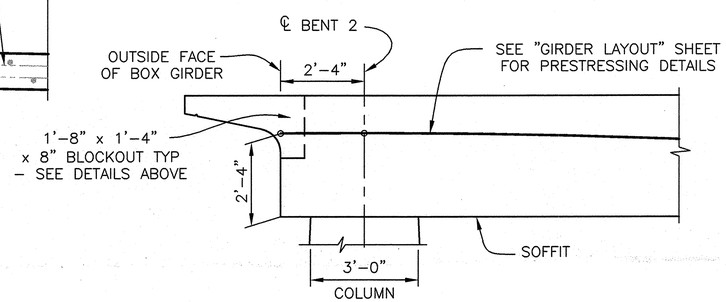

TENDON PATH ELEVATION

NOTES:

1. ALL BLOCKOUTS AND OVERHANGS TO BE CONCRETED WITH STRUCTURAL CONCRETE (BRIDGE) AFTER POST–TENSIONING IS COMPLETE.
2. SEE SECTION U–U FOR #6 TYPICAL SPACING AND OTHER NOTES.

POST TENSIONING BLOCKOUT DETAILS

NO SCALE

NOTES:

1. RAILINGS AND BARRIER REINFORCEMENT NOT SHOWN FOR CLARITY.
2. #6 STIRRUPS MAY BE SEPARATED AND BUNDLED TO MAKE ROOM FOR POST–TENSIONING EQUIPMENT. SEE "POST TENSIONING BLOCKOUT DETAILS" THIS SHEET.

NOTE: FOR SECTION T–T, SEE "BENT DETAILS NO. 1" SHEET.

NOTE: CONTRACTOR SHALL VERIFY ALL CONTROLLING FIELD DIMENSIONS BEFORE ORDERING OR FABRICATING ANY MATERIAL.

PUBLIC CONTRACT

SPECIFICATION NO. ~~XXXX~~ CITY CONTRACT, CIP NO. ~~XXXXX~~ 00941

PLANS FOR THE CONSTRUCTION OF:

TED WILLIAMS PARKWAY PEDESTRIAN OVERCROSSING AT SHOAL CREEK DRIVE

BENT DETAILS NO. 2

CITY OF SAN DIEGO, CALIFORNIA
ENGINEERING AND CAPITAL PROJECTS DEPARTMENT
SHEET 21 OF 48 SHEETS

W.O. NO. S–00941

A. Palaseyed 4/7/2011
FOR CITY ENGINEER DATE

A. PALASEYED, SECTION HEAD

M. KOLL, PROJECT MANAGER

DESCRIPTION	BY	APPROVED	DATE	FILMED
ORIGINAL	SWE			

NAD 83
292–1743
LAMBERT COORDINATES

CONTRACTOR _____ DATE STARTED _____
INSPECTOR _____ DATE COMPLETED _____

35490-21-D

REGISTERED PROFESSIONAL ENGINEER – Craig Shannon – No. 66998 – Exp. 9–30–12 – CIVIL – STATE OF CALIFORNIA

SIMON WONG ENGINEERING
9968 Hibert Street, Second Floor
San Diego, CA 92131
(858) 566–3113

Job No. 500–773

Craig Shannon DATE: 4–1–11
PREPARED BY CRAIG SHANNON R.C.E. NO. 66998
REGISTRATION EXPIRES: 09/30/12

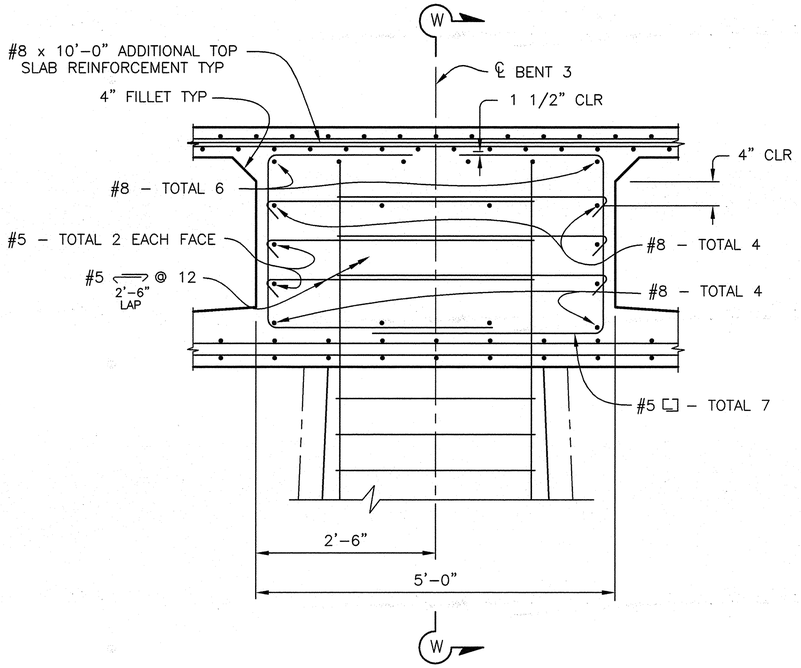

BENT 3 CAP ELEVATION

1" = 1'-0"

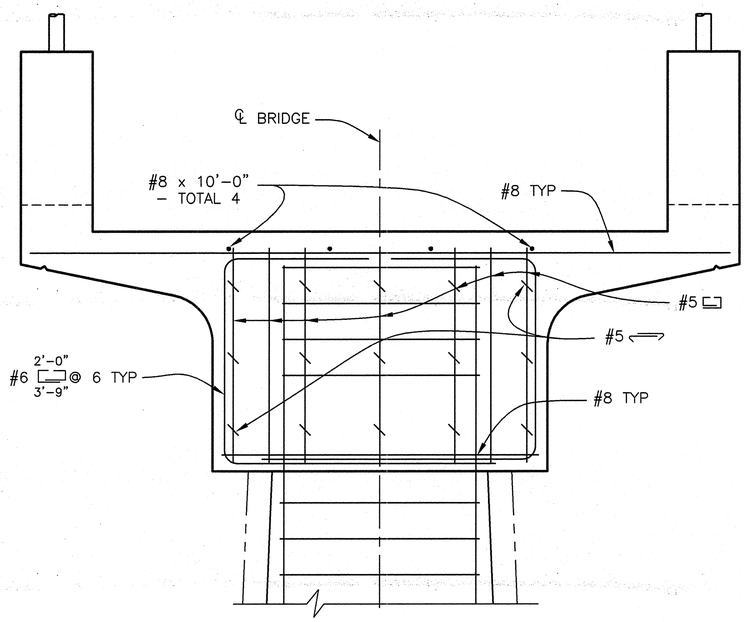

NOTE: FOR COLUMN AND PILE REINFORCEMENT, SEE "TYPICAL COLUMN AND PILE REINFORCEMENT BENTS 2, 3, AND 4" DETAIL ON "BENT DETAILS NO. 1" SHEET.

SECTION W-W

1" = 1'-0"

NOTE: CONTRACTOR SHALL VERIFY ALL CONTROLLING FIELD DIMENSIONS BEFORE ORDERING OR FABRICATING ANY MATERIAL.

REGISTERED PROFESSIONAL ENGINEER
Craig Shannon
No. 66998
Exp. 9-30-12
CIVIL
STATE OF CALIFORNIA

SIMON WONG ENGINEERING
9968 Hibert Street, Second Floor
San Diego, CA 92131
(858) 586-3113
Job No. 500-773
Craig Shannon DATE: 4-1-11
PREPARED BY: CRAIG SHANNON R.C.E. NO. 66998
REGISTRATION EXPIRES: 09/30/12

PUBLIC CONTRACT

SPECIFICATION NO. ~~XXXX~~ 5 CITY CONTRACT, CIP NO. ~~XXXXX~~ 00941

PLANS FOR THE CONSTRUCTION OF:

TED WILLIAMS PARKWAY PEDESTRIAN OVERCROSSING AT SHOAL CREEK DRIVE

BENT DETAILS NO. 3

CITY OF SAN DIEGO, CALIFORNIA
ENGINEERING AND CAPITAL PROJECTS DEPARTMENT
SHEET 22 OF 46 SHEETS

W.O. NO. S-00941

A. Palaseyed 4/7/2011
FOR CITY ENGINEER DATE

A. PALASEYED
SECTION HEAD

DESCRIPTION	BY	APPROVED	DATE	FILMED
ORIGINAL	SWE			

M. KOLL
PROJECT MANAGER

NAD 83
292-1743
LAMBERT COORDINATES

CONTRACTOR _____ DATE STARTED _____
INSPECTOR _____ DATE COMPLETED _____

35490-22-D

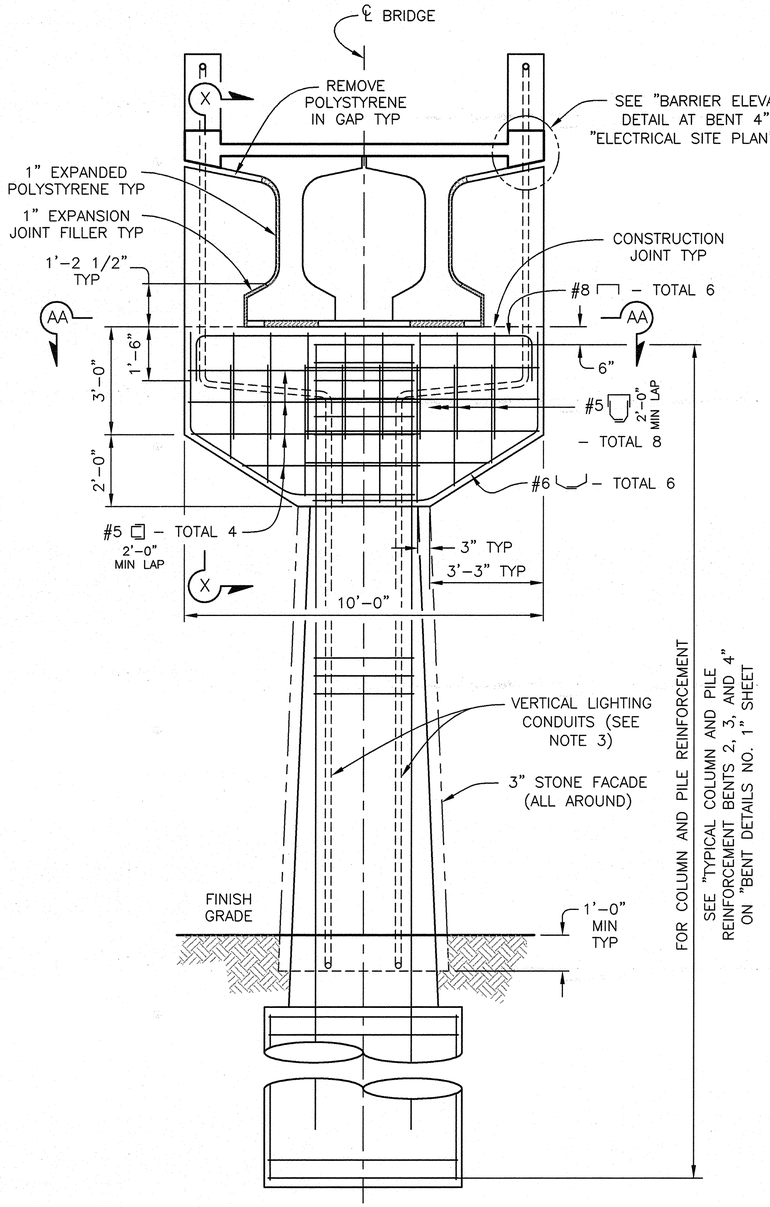

NOTES:

1. BENT 4 SHOWN, BENT 5 SIMILAR.
2. RAILINGS NOT SHOWN FOR CLARITY.
3. FOR LOCATION OF LIGHTING CONDUITS, PULL BOXES, AND SERVICE POINT LOCATION, SEE "ELECTRICAL SITE PLAN" SHEET.

TYPICAL BENT ELEVATION

1/2" = 1'-0"

NOTE: CONTRACTOR SHALL VERIFY ALL CONTROLLING FIELD DIMENSIONS BEFORE ORDERING OR FABRICATING ANY MATERIAL.

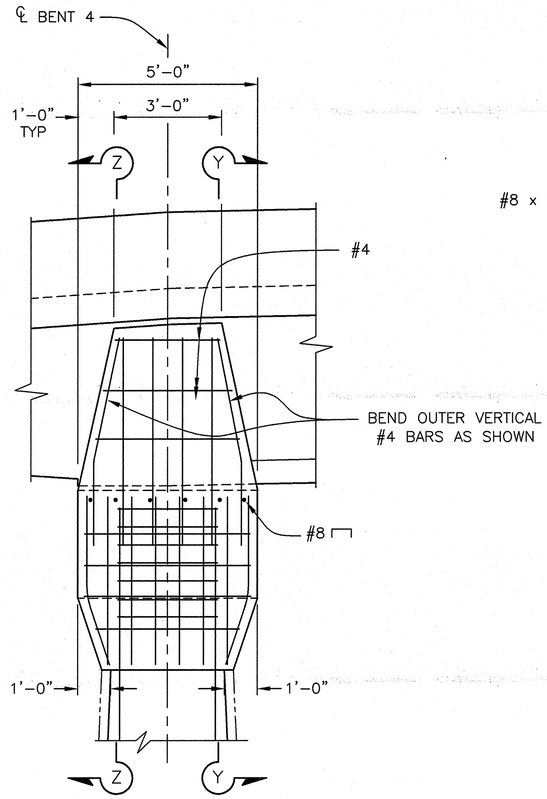

SECTION X-X

1/2" = 1'-0"

NOTE: FOR SECTION AA–AA SEE "BENT DETAILS NO. 5" SHEET.

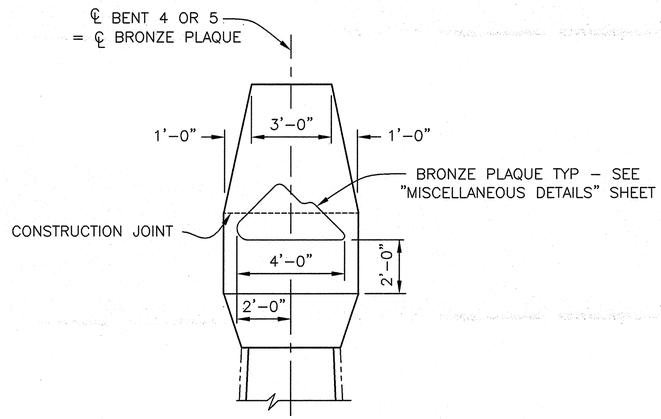

BRONZE PLAQUE PLACEMENT DETAIL

3/8" = 1'-0"

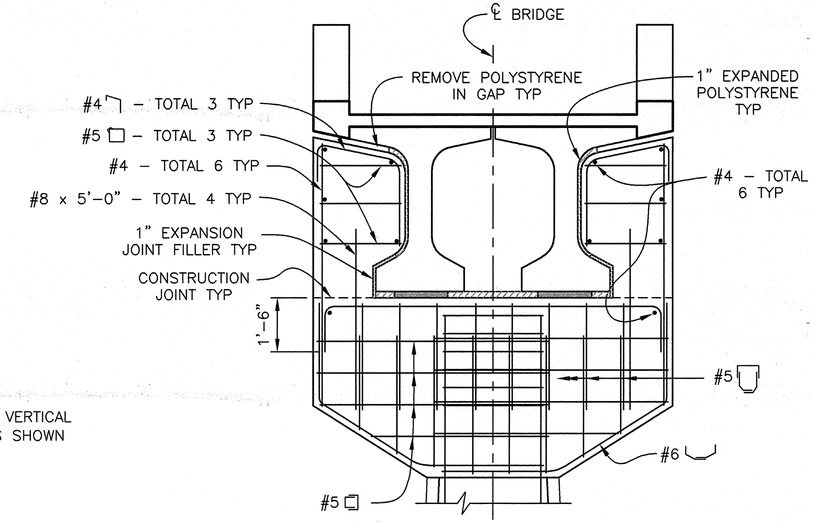

SECTION Y-Y

1/2" = 1'-0"

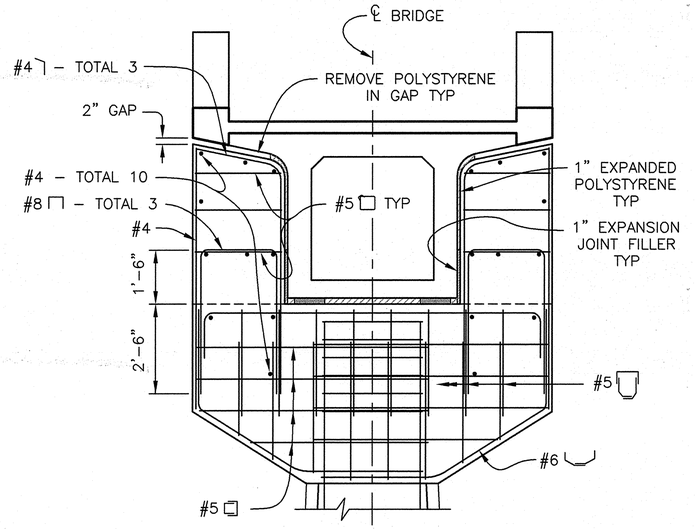

SECTION Z-Z

1/2" = 1'-0"

PUBLIC CONTRACT

SPECIFICATION NO. 4885 CITY CONTRACT, CIP NO. 52-00941

PLANS FOR THE CONSTRUCTION OF:

TED WILLIAMS PARKWAY PEDESTRIAN OVERCROSSING AT SHOAL CREEK DRIVE

BENT DETAILS NO. 4

REGISTERED PROFESSIONAL ENGINEER — Craig Shannon — No. 66998 — Exp. 9-30-12 — CIVIL — STATE OF CALIFORNIA

SIMON WONG ENGINEERING
9968 Hibert Street, Second Floor
San Diego, CA 92131
(858) 586-3113
Job No. 500-773

Craig Shannon DATE: 4-1-11
PREPARED BY: CRAIG SHANNON R.C.E. NO. 66998
REGISTRATION EXPIRES: 09/30/12

CITY OF SAN DIEGO, CALIFORNIA
ENGINEERING AND CAPITAL PROJECTS DEPARTMENT
SHEET 23 OF 46 SHEETS

W.O. NO. S-00941

A. Palaseyed 4/7/2011
FOR CITY ENGINEER DATE

A. PALASEYED — SECTION HEAD
M. KOLL — PROJECT MANAGER

DESCRIPTION	BY	APPROVED	DATE	FILMED
ORIGINAL	SWE			

NAD 83
292-1743
LAMBERT COORDINATES

CONTRACTOR _____ DATE STARTED _____
INSPECTOR _____ DATE COMPLETED _____

35490-23-D

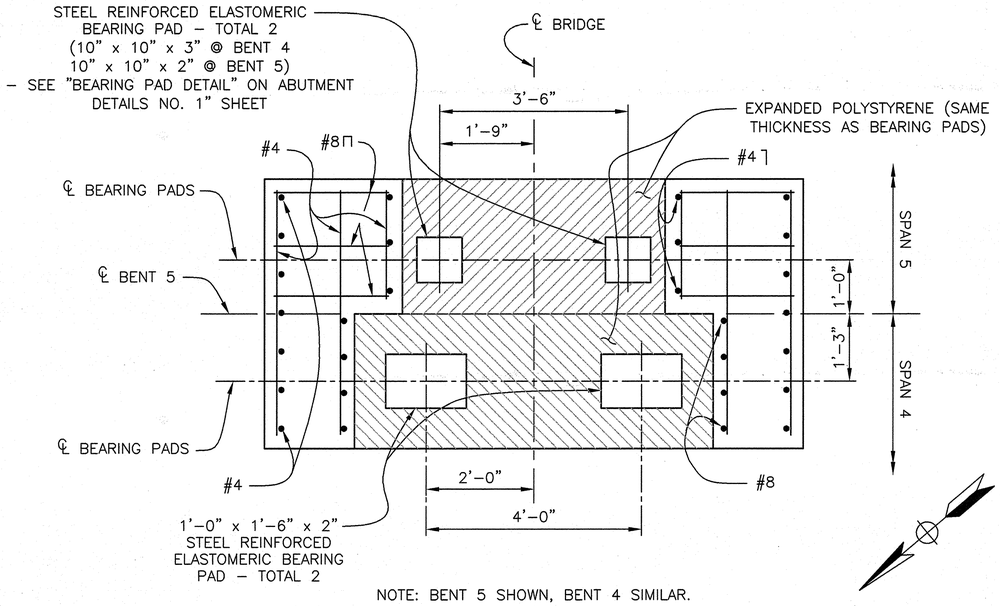

NOTE: BENT 5 SHOWN, BENT 4 SIMILAR.

SECTION AA–AA

3/4" = 1'–0"

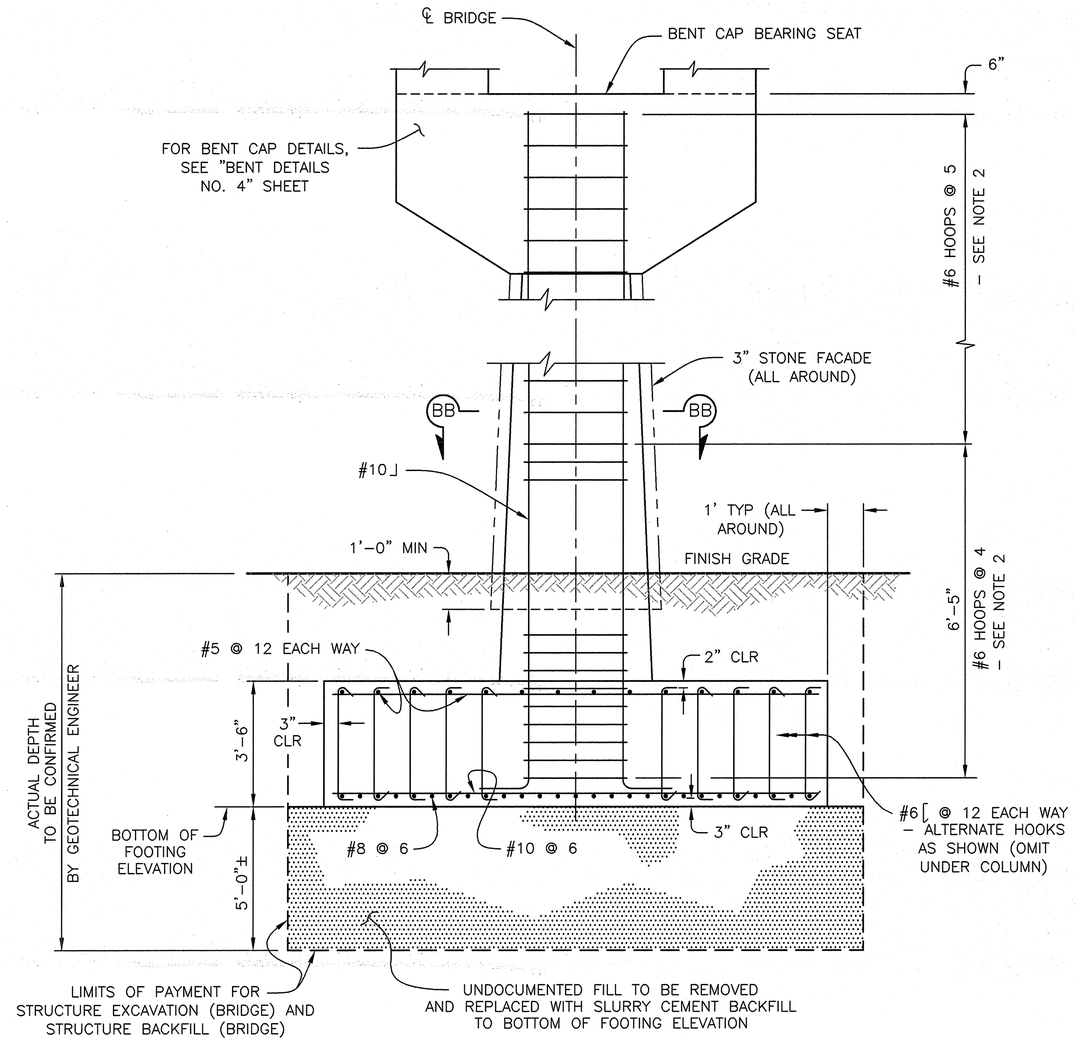

NOTES:

1. NO SPLICES ALLOWED IN COLUMN REINFORCEMENT.
2. HOOPS ARE ULTIMATE BUTT SPLICED CONTINUOUS.

BENT 5 ELEVATION

NO SCALE

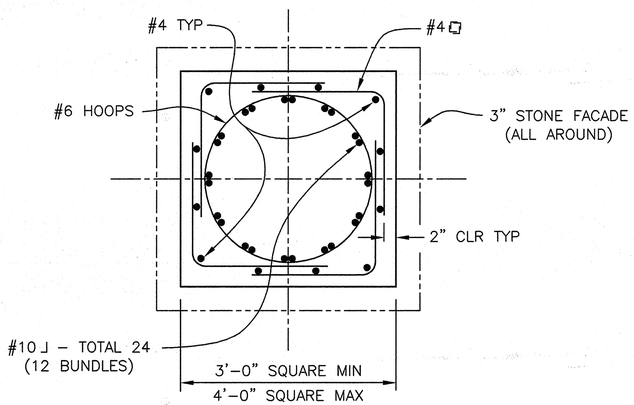

SECTION BB–BB

1/2" = 1'–0"

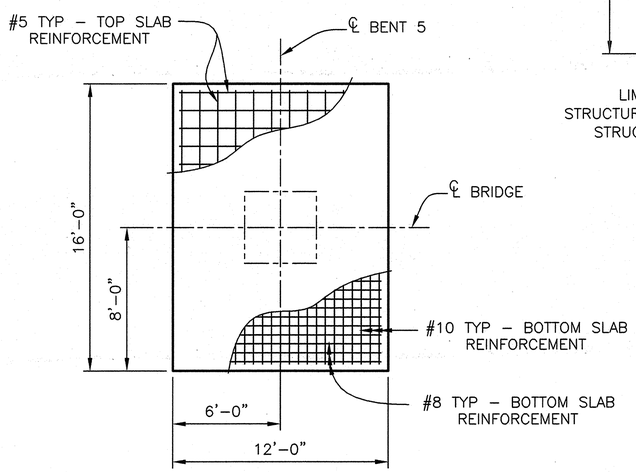

FOOTING PLAN

1/4" = 1'–0"

NOTE: CONTRACTOR SHALL VERIFY ALL CONTROLLING FIELD DIMENSIONS BEFORE ORDERING OR FABRICATING ANY MATERIAL.

NOTE: FOR LOCATION OF SECTION AA–AA, SEE "BENT DETAILS NO. 4" SHEET.

PUBLIC CONTRACT

SPECIFICATION NO. ~~XXXX~~ CITY CONTRACT, CIP NO. ~~XXXXX~~ S-00941

PLANS FOR THE CONSTRUCTION OF:

TED WILLIAMS PARKWAY PEDESTRIAN OVERCROSSING AT SHOAL CREEK DRIVE

BENT DETAILS NO. 5

REGISTERED PROFESSIONAL ENGINEER — Craig Shannon — No. 66998 — Exp. 9-30-12 — CIVIL — STATE OF CALIFORNIA

CITY OF SAN DIEGO, CALIFORNIA
ENGINEERING AND CAPITAL PROJECTS DEPARTMENT
SHEET 24 OF 46 SHEETS

W.O. NO. S-00941

A. Palaseyed FOR CITY ENGINEER — 4/7/2011 DATE

A. PALASEYED SECTION HEAD

M. KOLL PROJECT MANAGER

DESCRIPTION	BY	APPROVED	DATE	FILMED
ORIGINAL	SWE			

NAD 83
292–1743
LAMBERT COORDINATES

CONTRACTOR _____ DATE STARTED _____
INSPECTOR _____ DATE COMPLETED _____

35490-24-D

SIMON WONG ENGINEERING
9968 Hibert Street, Second Floor
San Diego, CA 92131
(858) 566-3113

Job No. 500-773

Craig Shannon DATE: 4-1-11
PREPARED BY: CRAIG SHANNON R.C.E. NO. 66998
REGISTRATION EXPIRES: 09/30/12

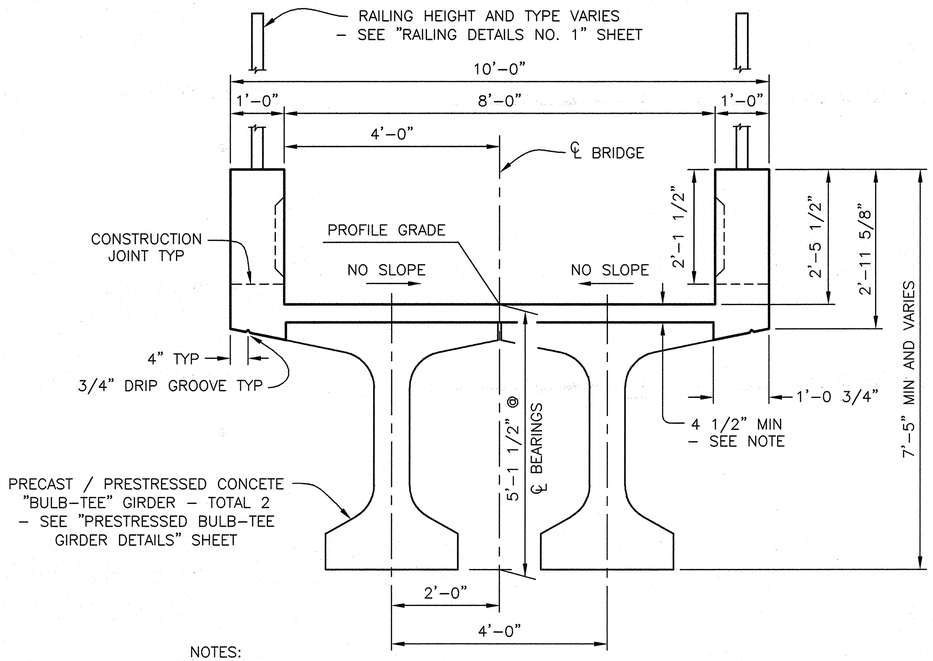

NOTES:

1. CONCRETE TOPPING THICKNESS MAY VARY TO ACCOMODATE GIRDER CAMBER.
2. PREPARE AND STAIN ALL EXPOSED CONCRETE SURFACES EXCEPT WALKING SURFACE. ALL STAINED SURFACES SHALL BE PROTECTED WITH ANTI–GRAFFITI COATING.
3. WALKING SURFACE SHALL BE BROOM FINISHED AND SLIP RESISTANT.

TYPICAL SECTION SPAN 4

3/4" = 1'–0"

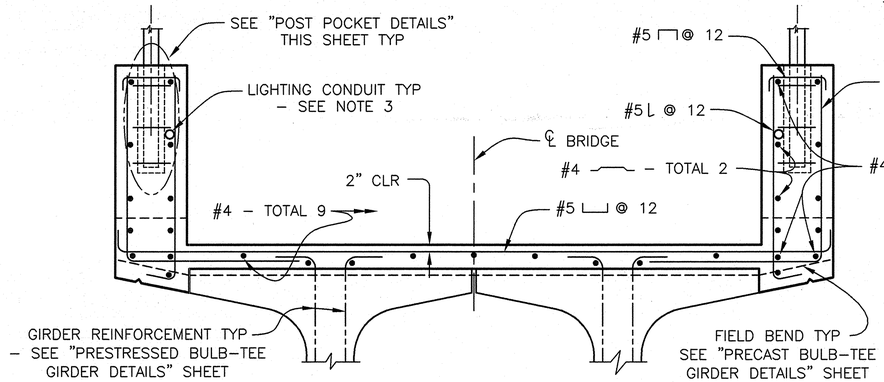

NOTES:

1. REINFORCEMENT IS SYMMETRICAL ABOUT CENTERLINE BRIDGE.
2. FOR LOCATION OF LIGHTING CONDUIT, PULL BOXES, AND SERVICE POINT LOCATION, SEE "ELECTRICAL SITE PLAN" SHEET.

PART TYPICAL SECTION SPAN 4

1" = 1'–0"

B0–5

NOTE: CONTRACTOR SHALL VERIFY ALL CONTROLLING FIELD DIMENSIONS BEFORE ORDERING OR FABRICATING ANY MATERIAL.

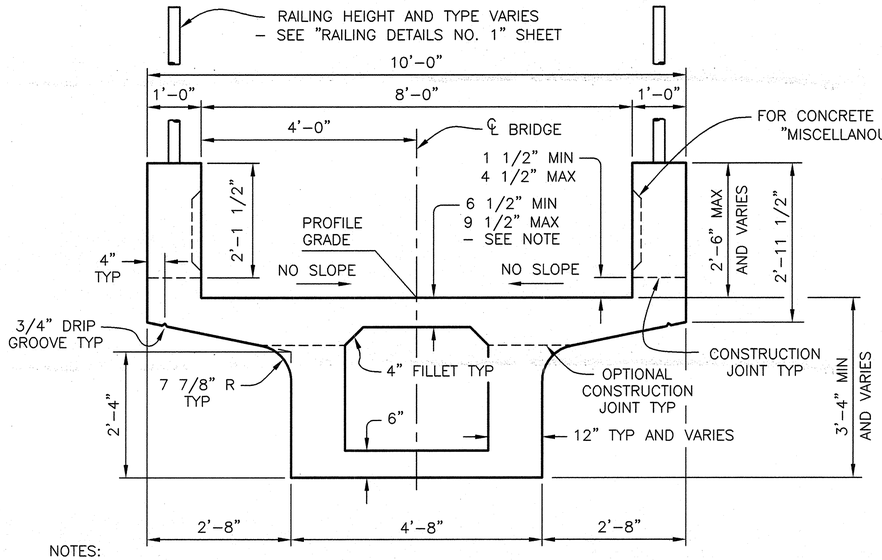

NOTES:

1. TOP SLAB THICKNESS VARIES IN SPANS 1, 2, AND 3 DUE TO RAMP AND LANDING CONFIGURATION. SEE "LANDING DETAIL" ON "DECK CONTOURS" SHEET FOR DETAILS.
2. PREPARE AND STAIN ALL EXPOSED CONCRETE SURFACES EXCEPT WALKING SURFACE. ALL STAINED SURFACES SHALL BE PROTECTED WITH ANTI–GRAFFITI COATING.
3. WALKING SURFACE SHALL BE BROOM FINISHED AND SLIP RESISTANT.

TYPICAL SECTION SPANS 1, 2, 3, AND 5

3/4" = 1'–0"

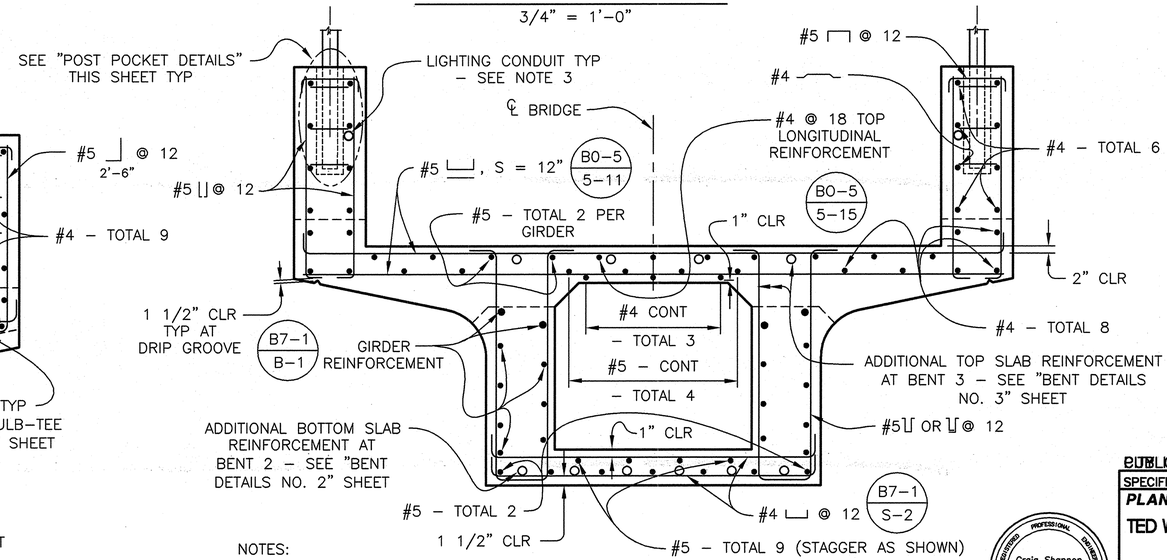

NOTES:

1. REINFORCEMENT IS SYMMETRICAL ABOUT CENTERLINE BRIDGE.
2. FOR LOCATION OF LIGHTING CONDUIT, PULL BOXES, AND SERVICE POINT LOCATION, SEE "ELECTRICAL SITE PLAN" SHEET.

PART TYPICAL SECTION SPANS 1, 2, 3, AND 5

1" = 1'–0"

B0–5 B7–1 B8–5

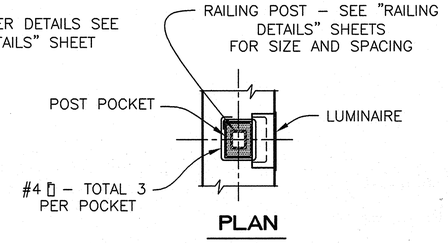

PLAN

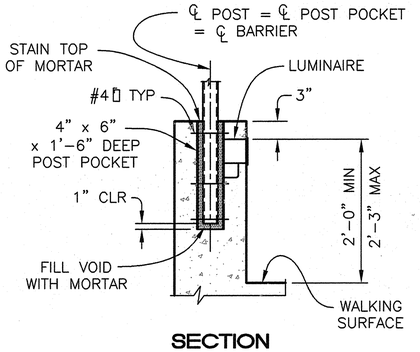

SECTION

POST POCKET DETAILS

1" = 1'–0"

PUBLIC CONTRACT

SPECIFICATION NO. ~~555~~ CITY CONTRACT, CIP NO. ~~52-00941~~

PLANS FOR THE CONSTRUCTION OF:

TED WILLIAMS PARKWAY PEDESTRIAN OVERCROSSING AT SHOAL CREEK DRIVE

TYPICAL SECTIONS

CITY OF SAN DIEGO, CALIFORNIA
ENGINEERING AND CAPITAL PROJECTS DEPARTMENT
SHEET 25 OF 46 SHEETS

W.O. NO. S–00941

A. Palaseyed 4/7/2011
FOR CITY ENGINEER DATE

A. PALASEYED
SECTION HEAD

M. KOLL
PROJECT MANAGER

DESCRIPTION	BY	APPROVED	DATE	FILMED
ORIGINAL	SWE			

NAD 83
292–1743
LAMBERT COORDINATES

CONTRACTOR _____ DATE STARTED _____
INSPECTOR _____ DATE COMPLETED _____

35490-25-D

REGISTERED PROFESSIONAL ENGINEER
Craig Shannon
No. 66998
Exp. 9–30–12
CIVIL
STATE OF CALIFORNIA

SIMON WONG ENGINEERING
9968 Hibert Street, Second Floor
San Diego, CA 92131
(858) 566–3113

Job No. 500–773

Craig Shannon DATE: 4–1–11
PREPARED BY CRAIG SHANNON R.C.E. NO. 66998
REGISTRATION EXPIRES: 09/30/12

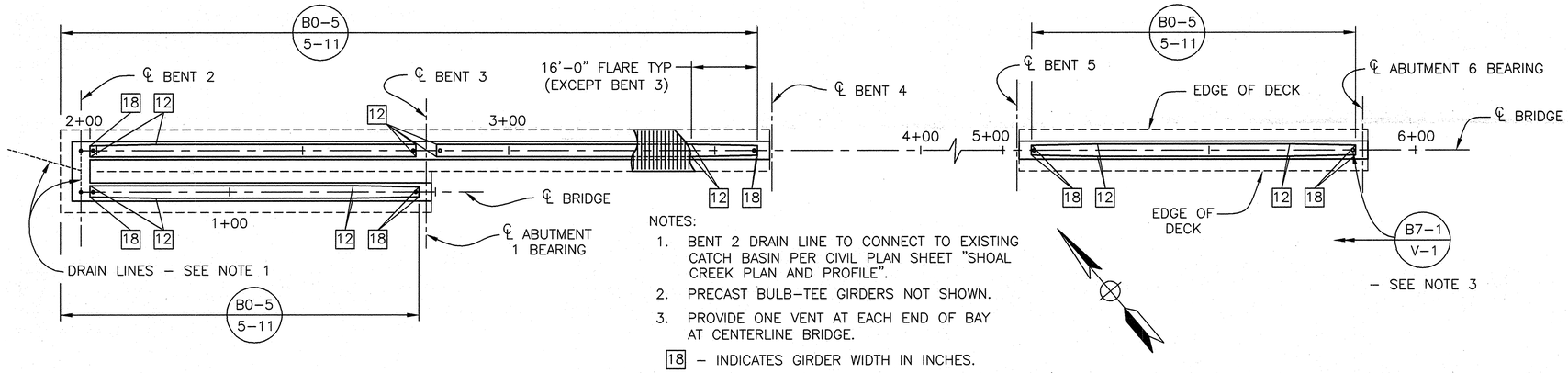

NOTES:

1. BENT 2 DRAIN LINE TO CONNECT TO EXISTING CATCH BASIN PER CIVIL PLAN SHEET "SHOAL CREEK PLAN AND PROFILE".
2. PRECAST BULB–TEE GIRDERS NOT SHOWN.
3. PROVIDE ONE VENT AT EACH END OF BAY AT CENTERLINE BRIDGE.

[18] – INDICATES GIRDER WIDTH IN INCHES.

GIRDER LAYOUT (B7-1)

1/16" = 1'-0"

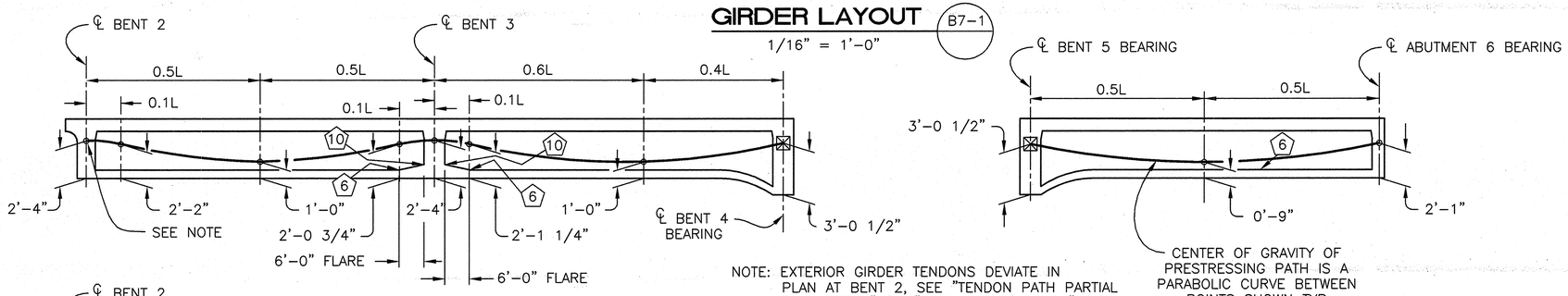

NOTE: EXTERIOR GIRDER TENDONS DEVIATE IN PLAN AT BENT 2, SEE "TENDON PATH PARTIAL PLAN DETAIL" ON "BENT DETAILS NO. 2" SHEET.

⊠ – INDICATES THEORETICAL POINT OF NO MOVEMENT.

⬠ – INDICATES BOTTOM SLAB THICKNESS IN INCHES.

CENTER OF GRAVITY OF PRESTRESSING PATH IS A PARABOLIC CURVE BETWEEN POINTS SHOWN TYP

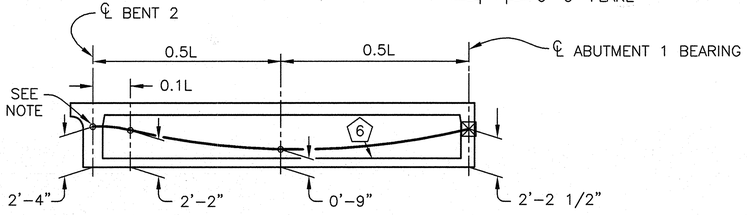

LONGITUDINAL SECTION

NO SCALE

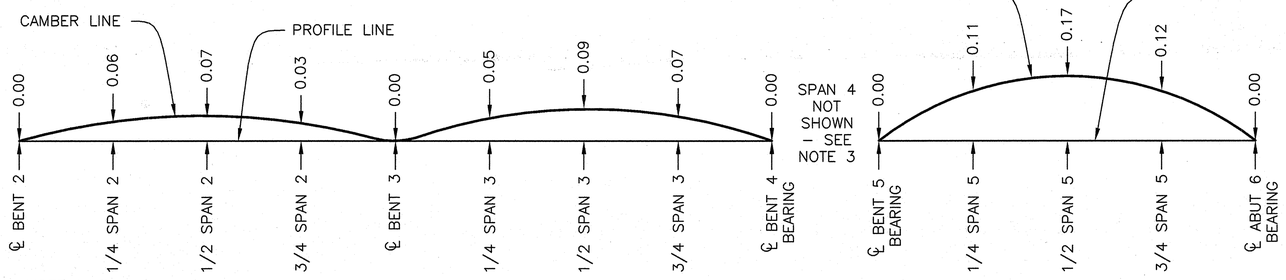

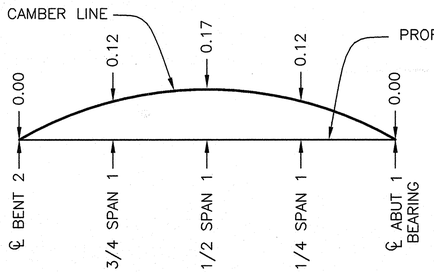

NOTES:

1. CAMBER VALUES ARE IN FEET.
2. CAMBER VALUES DO NOT INCLUDE ALLOWANCE FOR FALSEWORK SETTLEMENT.
3. SPAN 4 CONSISTS OF PRECAST GIRDERS.

CAMBER DIAGRAM

NO SCALE

NOTE: CONTRACTOR SHALL VERIFY ALL CONTROLLING FIELD DIMENSIONS BEFORE ORDERING OR FABRICATING ANY MATERIAL.

PRESTRESSING NOTES

270 ksi LOW RELAXATION STRANDS:

PJACK	= 1,670 kips (SPAN 1) = 1,670 kips (SPANS 2 AND 3) = 1,670 kips (SPAN 5)
ANCHOR SET	= 3/8"
TOTAL NUMBER OF GIRDERS	= 2

DISTRIBUTION OF PRESTRESS FORCE (PJACK) BETWEEN GIRDERS SHALL BE APPROXIMATELY EQUAL IN EACH GIRDER.

CONCRETE:

f'c = 5,000 psi AT 28 DAYS

f'ci = 3,500 psi AT TIME OF STRESSING

CONTRACTOR SHALL SUBMIT ELONGATION CALCULATION BASED ON INITIAL STRESS AT ⊠ OF:

0.939 TIMES JACKING STRESS (SPAN 1)
0.913 TIMES JACKING STRESS (SPANS 2 AND 3)
0.945 TIMES JACKING STRESS (SPAN 5)

ONE END STRESSING SHALL BE PERFORMED FROM:

BENT 2 (SPAN 1)
BENT 2 (SPANS 2 AND 3)
ABUTMENT 6 (SPAN 5)

DISTRIBUTE AND SEQUENCE PRESTRESSING PER ABOUT LONGITUDINAL CENTERLINE OF BENT 2. (B8-5)

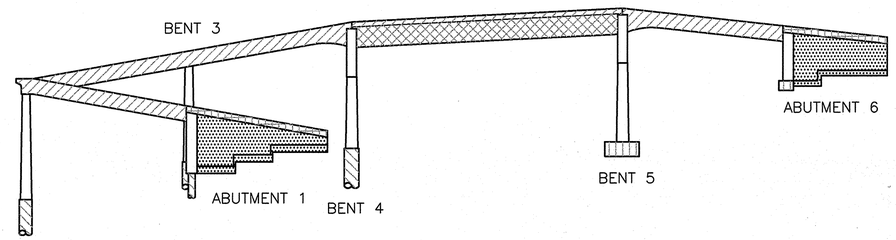

- STRUCTURAL CONCRETE, BRIDGE
- STRUCTURAL CONCRETE, RETAINING WALL
- CAST–IN–DRILLED HOLE (CIDH) PILES (f'c = 3,600 psi @ 28 DAYS)
- STRUCTURAL CONCRETE, BRIDGE FOOTING
- STRUCTURAL CONCRETE, BRIDGE (f'c = 5,000 psi @ 28 DAYS)
- PRECAST GIRDER – SEE "PRESTRESSED BULB–TEE GIRDER DETAILS" SHEET
- MINOR CONCRETE (RAMP PAVING)

CONCRETE STRENGTH AND TYPE LIMITS

NO SCALE

CITY CONTRACT

SPECIFICATION NO. 4885 CITY CONTRACT, CIP NO. S–00941

PLANS FOR THE CONSTRUCTION OF:

TED WILLIAMS PARKWAY PEDESTRIAN OVERCROSSING AT SHOAL CREEK DRIVE

GIRDER LAYOUT

REGISTERED PROFESSIONAL ENGINEER — Craig Shannon — No. 66998 — Exp. 9-30-12 — CIVIL — STATE OF CALIFORNIA

CITY OF SAN DIEGO, CALIFORNIA
ENGINEERING AND CAPITAL PROJECTS DEPARTMENT
SHEET 26 OF 46 SHEETS

W.O. NO. S–00941

A. Palaseyed 4/7/2011
FOR CITY ENGINEER DATE

A. PALASEYED, SECTION HEAD
M. KOLL, PROJECT MANAGER

DESCRIPTION	BY	APPROVED	DATE	FILMED
ORIGINAL	SWE			

NAD 83
292–1743
LAMBERT COORDINATES

CONTRACTOR _____ DATE STARTED _____
INSPECTOR _____ DATE COMPLETED _____

35490-26-D

SIMON WONG ENGINEERING
9968 Hibert Street, Second Floor
San Diego, CA 92131
(858) 586–3113

Job No. 500–773

Craig Shannon DATE: 4-1-11
PREPARED BY: CRAIG SHANNON R.C.E. NO. 66998
REGISTRATION EXPIRES: 09/30/12

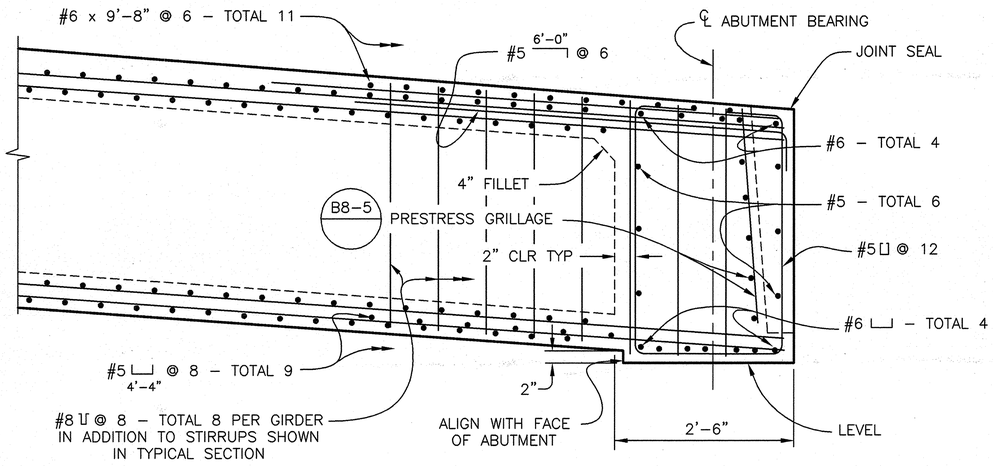

NOTE: ABUTMENT 6 SHOWN, ABUTMENT 1 SIMILAR.

END DIAPHRAGM ABUTMENTS 1 AND 6

1" = 1'-0"

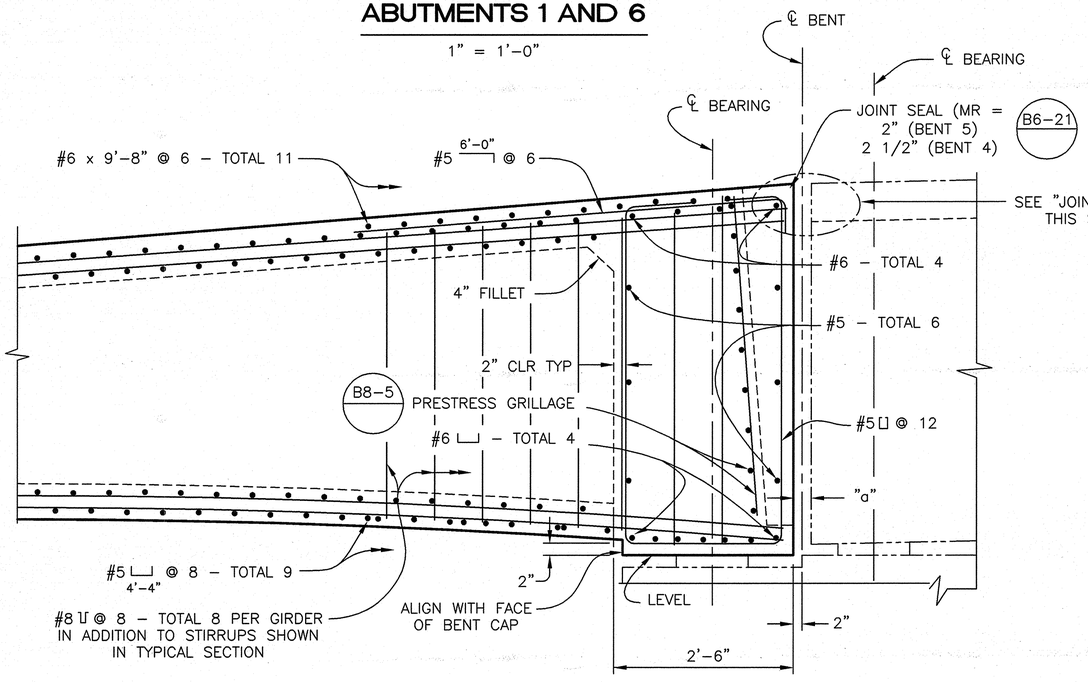

NOTE: BENT 4 SHOWN, BENT 5 SIMILAR.

END DIAPHRAGM BENTS 4 AND 5

1" = 1'-0"

NOTE: CONTRACTOR SHALL VERIFY ALL CONTROLLING FIELD DIMENSIONS BEFORE ORDERING OR FABRICATING ANY MATERIAL.

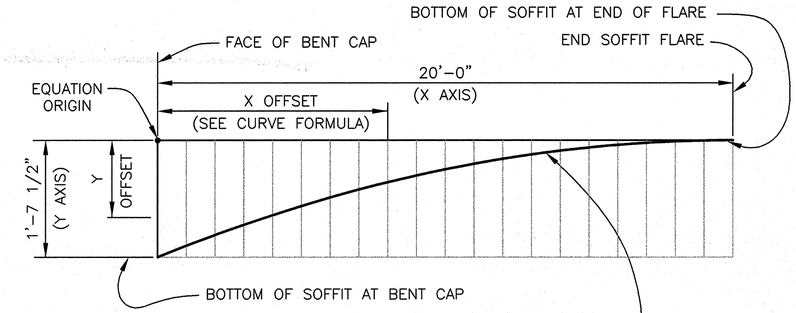

AT BENTS 4 AND 5

CURVE FORMULA: $Y = (20 - X)^2/246$

X OFFSET (FEET)	Y OFFSET (FEET)
0.000	1.626
1.000	1.467
2.000	1.317
3.000	1.175
4.000	1.041
5.000	0.915
6.000	0.797
7.000	0.687
8.000	0.585
9.000	0.492
10.000	0.407
11.000	0.329
12.000	0.260
13.000	0.199
14.000	0.146
15.000	0.102
16.000	0.065
17.000	0.037
18.000	0.016
19.000	0.004
20.000	0.000

SOFFIT FLARE GEOMETRY

NO SCALE

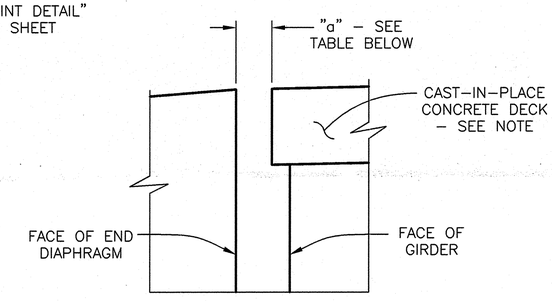

NOTE: CONCRETE DECK SHALL BE EXTENDED BEYOND FACE OF GIRDER TO ACHIEVE SPECIFIED "a" DIMENSION.

JOINT DETAIL

NO SCALE

"a" DIMENSION B6-21

		WINTER	FALL/SPRING	SUMMER
BENT 4	2 1/2" MR	1 3/4"	1 1/2"	1"
BENT 5	2" MR	1 1/2"	1 1/4"	3/4"

REGISTERED PROFESSIONAL ENGINEER — Craig Shannon — No. 66998 — Exp. 9-30-12 — CIVIL — STATE OF CALIFORNIA

SIMON WONG ENGINEERING
9968 Hibert Street, Second Floor
San Diego, CA 92131
(858) 586-3113
Job No. 500-773
Craig Shannon DATE: 4-1-11
PREPARED BY: CRAIG SHANNON R.C.E. NO. 66998
REGISTRATION EXPIRES: 09/30/12

CITY CONTRACT
SPECIFICATION NO. 4885 CITY CONTRACT, CIP NO. S-00941
PLANS FOR THE CONSTRUCTION OF:
TED WILLIAMS PARKWAY PEDESTRIAN OVERCROSSING AT SHOAL CREEK DRIVE
GIRDER DETAILS

CITY OF SAN DIEGO, CALIFORNIA
ENGINEERING AND CAPITAL PROJECTS DEPARTMENT
SHEET 27 OF 48 SHEETS

W.O. NO. S-00941

A. Palaseyed 4/7/2011
FOR CITY ENGINEER DATE

A. PALASEYED
SECTION HEAD

M. KOLL
PROJECT MANAGER

DESCRIPTION	BY	APPROVED	DATE	FILMED
ORIGINAL	SWE			

HAD 83
292-1743
LAMBERT COORDINATES

CONTRACTOR _____ DATE STARTED _____
INSPECTOR _____ DATE COMPLETED _____

35490-27-D

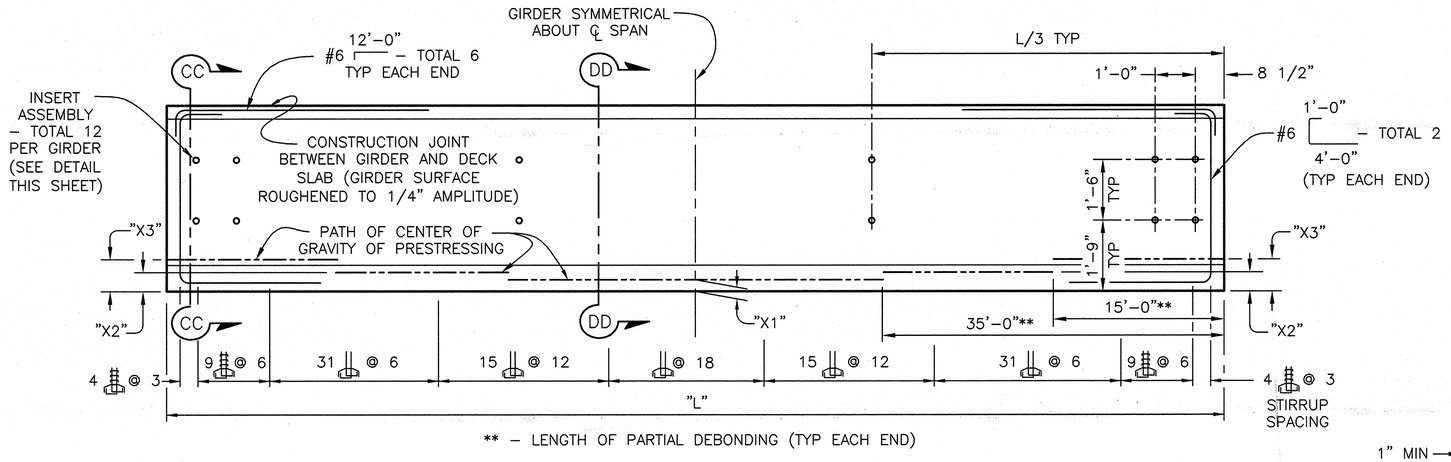

** — LENGTH OF PARTIAL DEBONDING (TYP EACH END)

GIRDER ELEVATION

NO SCALE

GIRDER SCHEDULE

GIRDER LENGTH "L"	NUMBER OF GIRDERS	P = JACKING FORCE (kips)	CONCRETE STRENGTH (psi)		CENTER OF GRAVITY OF PRESTRESSING PATH (in)			PERCENT OF DEBONDED STRANDS		DEFLECTION COMPONENTS (in)	
			f'ci	f'c	"X1"	"X2"	"X3"	AT "X3"	AT "X2"	DECK DL	BARRIER RAIL DL
139'-4"	2	1,670	5,000	6,600	5.34	5.67	5.88	32	11	1 1/2	1

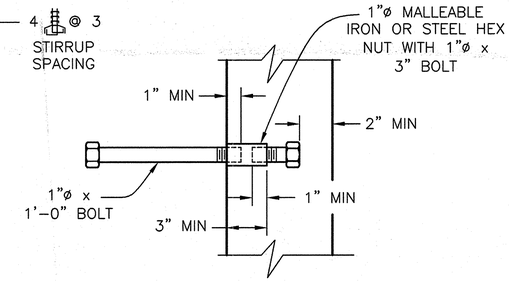

INSERT ASSEMBLY

NO SCALE

PRESTRESSING NOTES

JACKING FORCE (P): THE MANUFACTURE JACKING FORCE REQUIRED AT POINT OF CONTROL ALONG THE SPAN. THE JACKING FORCE DOES NOT INCLUDE ANY FABRICATION SPECIFIC LOSSES.

CONCRETE STRENGTH: f'ci IS AT TIME OF STRESSING, f'c IS AT 28 DAYS.

DEFLECTION COMPONENTS: INFORMATIONAL — TO BE USED IN SETTING SCREED LINE ELEVATIONS.

SCREED LINE ELEVATIONS FOR DECK CONCRETE WILL BE DETERMINED BY THE ENGINEER.

HARPED STRANDS MAY BE SUBSTITUTED FOR DEBONDED STRANDS, DESIGNED BY THE CONTRACTOR AND APPROVED BY THE ENGINEER.

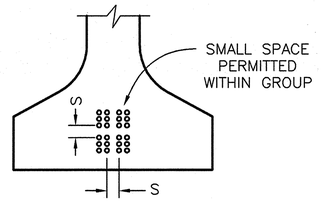

1. STRANDS MAY BE BUNDLED IN GROUPS CONSISTING OF THREE VERTICALLY AND TWO HORIZONTALLY, AND SEPARATED AT THE ENDS.
2. THE MINIMUM DISTANCE "S" BETWEEN GROUPS OR INDIVIDUAL STRANDS IS 1 1/2" FOR 3/8" STRANDS, 1 3/4" FOR 7/16" AND 1/2" STRANDS, AND 2" FOR 5/8" STRANDS.
3. "S" IS MEASURED BETWEEN CENTERS OF ADJACENT STRANDS.
4. APPROVAL OF ENGINEER IS REQUIRED FOR DEVIATION.

CLEARANCES FOR PRETENSIONED STRANDS

NO SCALE

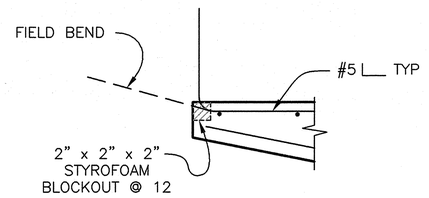

NOTE: EXTERIOR GIRDER EDGE ONLY.

DETAIL 4

NO SCALE

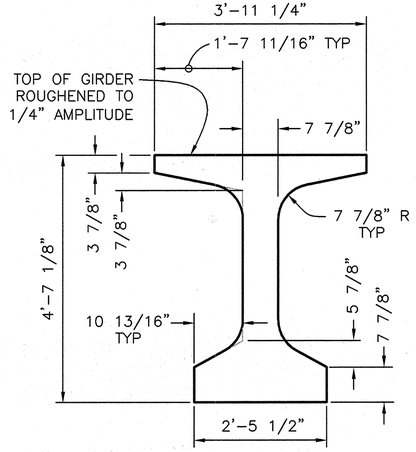

GIRDER SECTION

3/4" = 1'-0"

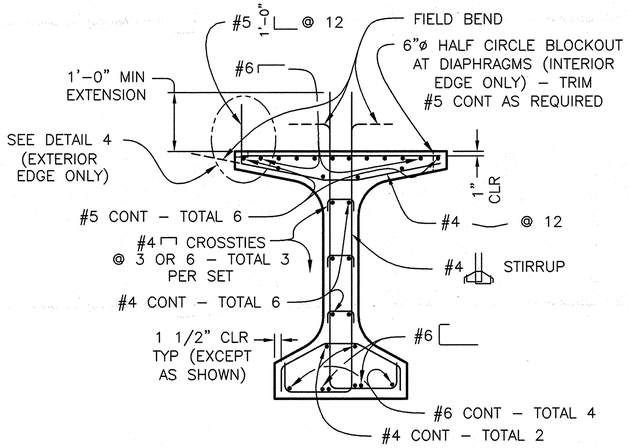

SECTION CC-CC

3/4" = 1'-0"

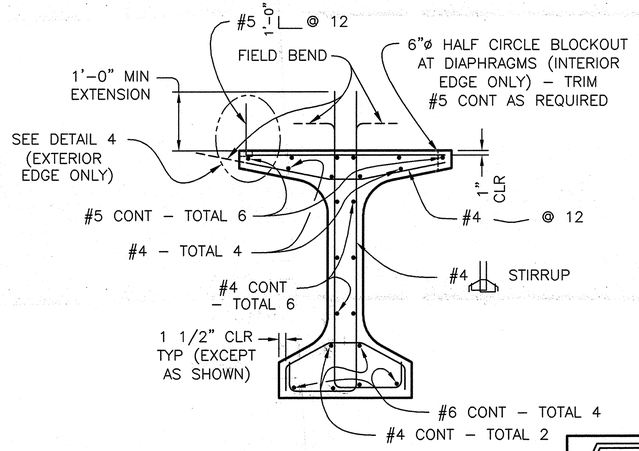

SECTION DD-DD

3/4" = 1'-0"

NOTE: CONTRACTOR SHALL VERIFY ALL CONTROLLING FIELD DIMENSIONS BEFORE ORDERING OR FABRICATING ANY MATERIAL.

CITY CONTRACT

SPECIFICATION NO. 4885 CITY CONTRACT, CIP NO. S-00941

PLANS FOR THE CONSTRUCTION OF:

TED WILLIAMS PARKWAY PEDESTRIAN OVERCROSSING AT SHOAL CREEK DRIVE

PRESTRESSED BULB-TEE GIRDER DETAILS

REGISTERED PROFESSIONAL ENGINEER — Craig Shannon — No. 66998 — Exp. 9-30-12 — CIVIL — STATE OF CALIFORNIA

CITY OF SAN DIEGO, CALIFORNIA
ENGINEERING AND CAPITAL PROJECTS DEPARTMENT
SHEET 28 OF 46 SHEETS

W.O. NO. S-00941

A. Palaseyed 4/7/2011
FOR CITY ENGINEER DATE

A. PALASEYED, SECTION HEAD

M. KOLL, PROJECT MANAGER

DESCRIPTION	BY	APPROVED	DATE	FILMED
ORIGINAL	SWE			

NAD 83
292-1743
LAMBERT COORDINATES

CONTRACTOR _____ DATE STARTED _____
INSPECTOR _____ DATE COMPLETED _____

35490-28-D

SIMON WONG ENGINEERING
9968 Hibert Street, Second Floor
San Diego, CA 92131
(858) 566-3113

Job No. 500-773

Craig Shannon DATE: 4-1-11
PREPARED BY: CRAIG SHANNON R.C.E. NO. 66998
REGISTRATION EXPIRES: 09/30/12

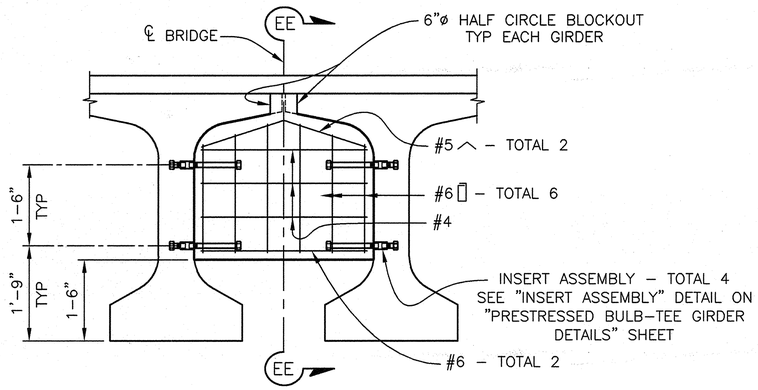

NOTE: REQUIRED AT EQUAL THIRD POINTS ALONG SPAN 4 – TOTAL 2.

INTERMEDIATE DIAPHRAGM SPAN 4

3/4" = 1'–0"

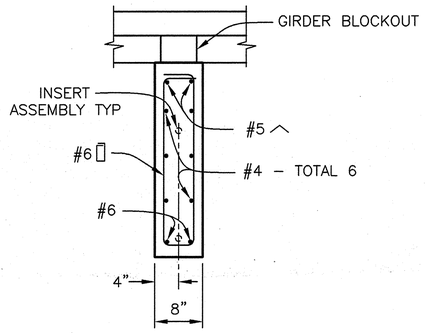

SECTION EE–EE

1" = 1'–0"

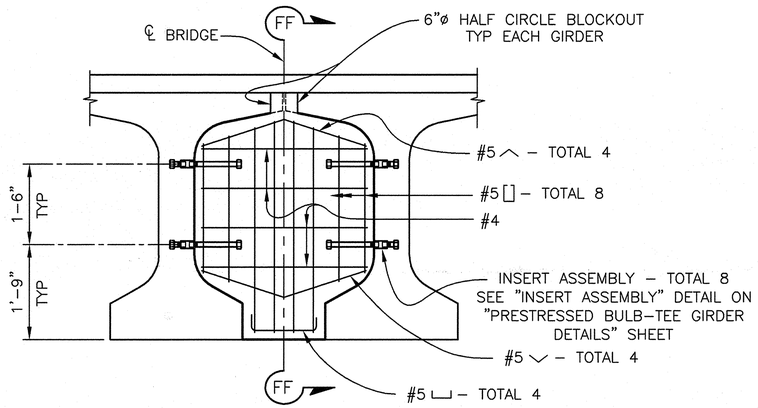

NOTE: REQUIRED AT EACH END OF SPAN 4 – TOTAL 2.

END DIAPHRAGM SPAN 4

3/4" = 1'–0"

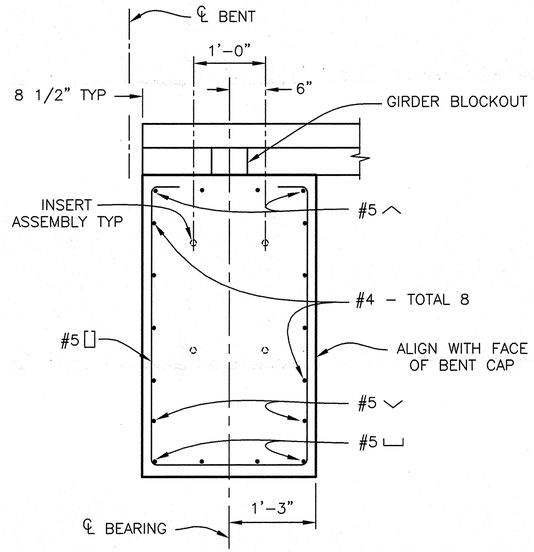

SECTION FF–FF

1" = 1'–0"

NOTE: CONTRACTOR SHALL VERIFY ALL CONTROLLING FIELD DIMENSIONS BEFORE ORDERING OR FABRICATING ANY MATERIAL.

REGISTERED PROFESSIONAL ENGINEER
Craig Shannon
No. 66998
Exp. 9-30-12
CIVIL
STATE OF CALIFORNIA

SIMON WONG ENGINEERING
9968 Hibert Street, Second Floor
San Diego, CA 92131
(858) 566-3113
Job No. 500-773
Craig Shannon DATE: 4-1-11
PREPARED BY CRAIG SHANNON R.C.E. NO. 66998
REGISTRATION EXPIRES: 09/30/12

CITY CONTRACT
SPECIFICATION NO. 4885 CITY CONTRACT, CIP NO. S-00941
PLANS FOR THE CONSTRUCTION OF:
TED WILLIAMS PARKWAY PEDESTRIAN OVERCROSSING AT SHOAL CREEK DRIVE
PRESTRESSED BULB-TEE GIRDER DIAPHRAGM DETAILS

CITY OF SAN DIEGO, CALIFORNIA
ENGINEERING AND CAPITAL PROJECTS DEPARTMENT
SHEET 29 OF 48 SHEETS

W.O. NO. S-00941

A. Palaseyed FOR CITY ENGINEER 4/7/2011 DATE
A. PALASEYED SECTION HEAD

DESCRIPTION	BY	APPROVED	DATE	FILMED
ORIGINAL	SWE			

M. KOLL PROJECT MANAGER

NAD 83
292–1743
LAMBERT COORDINATES

CONTRACTOR DATE STARTED
INSPECTOR DATE COMPLETED

35490-29-D

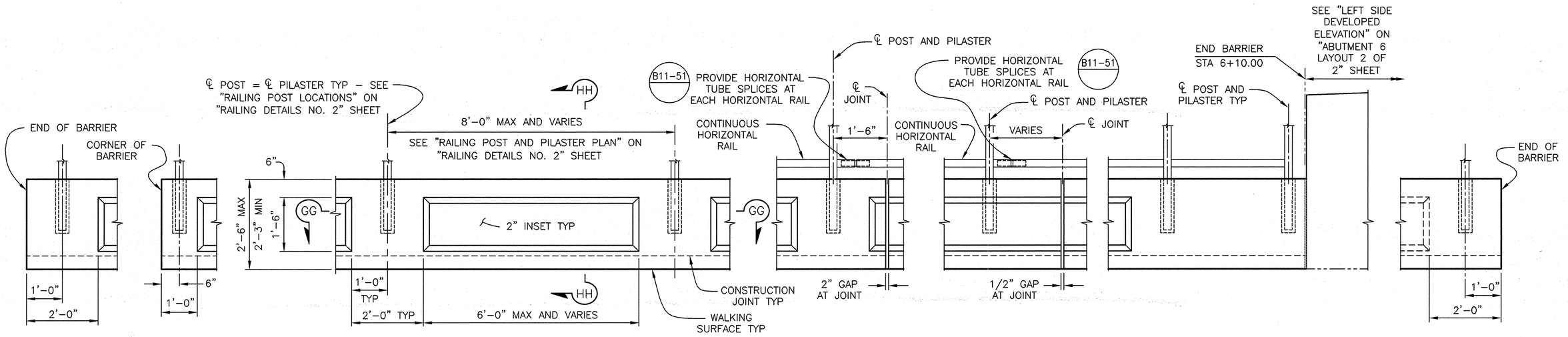

NOTE: ONLY REPRESENTATIVE SECTIONS OF RAILING SHOWN FOR CLARITY.

TYPICAL CONCRETE BARRIER ELEVATION

3/4" = 1'–0"

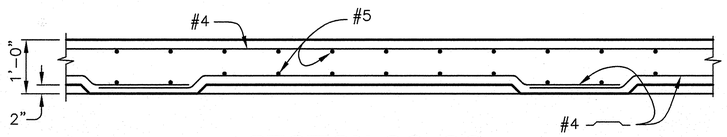

SECTION GG-GG

3/4" = 1'–0"

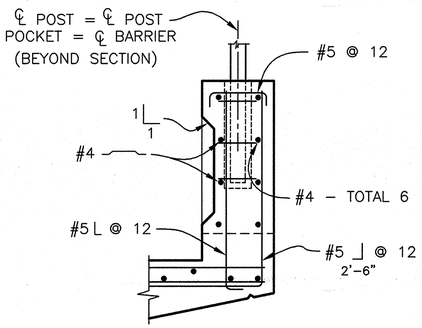

SECTION HH-HH

1" = 1'–0"

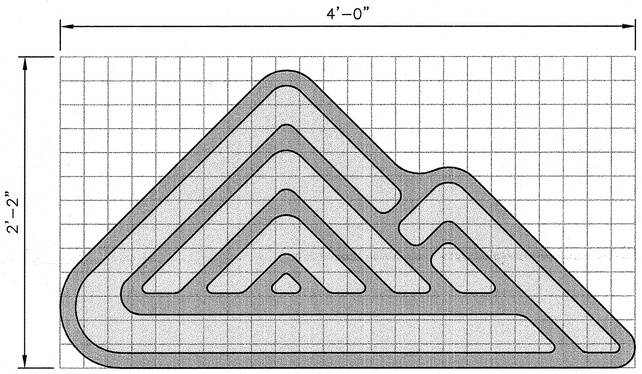

NATURAL BRONZE FINISH (1/8" THICK)

POLISHED BRONZE FINISH (1/4" THICK)

NOTES:

1. CASTING TO MEET ASTM B505, C86300 MANGANESE BRONZE.
2. 2" SQUARE GRID PROVIDED TO DETERMINE SHAPE. DIGITAL FILE AVAILABLE UPON REQUEST.
3. BRONZE PLAQUE TO BE ATTACHED TO BENT CAP CONCRETE WITH MANUFACTURER PROVIDED STUDS. BRONZE PLAQUE TO BE MOUNTED FLUSH WITH FINISHED CONCRETE SURFACE. FOR LOCATION, SEE "BENT DETAILS NO. 4" SHEET.

BRONZE PLAQUE DETAIL

2" = 1'–0"

NOTE: CONTRACTOR SHALL VERIFY ALL CONTROLLING FIELD DIMENSIONS BEFORE ORDERING OR FABRICATING ANY MATERIAL.

REGISTERED PROFESSIONAL ENGINEER — Craig Shannon — No. 66998 — Exp. 9-30-12 — CIVIL — STATE OF CALIFORNIA

SIMON WONG ENGINEERING
9968 Hibert Street, Second Floor
San Diego, CA 92131
(858) 566-3113
Job No. 500-773
Craig Shannon DATE: 4-1-11
PREPARED BY CRAIG SHANNON R.C.E. NO. 66998
REGISTRATION EXPIRES: 09/30/12

CITY CONTRACT

SPECIFICATION NO. 4885 CITY CONTRACT, CIP NO. S-00941

PLANS FOR THE CONSTRUCTION OF:

TED WILLIAMS PARKWAY PEDESTRIAN OVERCROSSING AT SHOAL CREEK DRIVE

MISCELLANEOUS DETAILS

CITY OF SAN DIEGO, CALIFORNIA
ENGINEERING AND CAPITAL PROJECTS DEPARTMENT
SHEET 30 OF 46 SHEETS

W.O. NO. S-00941

A. Palaseyed 4/7/2011
FOR CITY ENGINEER DATE

A. PALASEYED SECTION HEAD

M. KOLL PROJECT MANAGER

DESCRIPTION	BY	APPROVED	DATE	FILMED
ORIGINAL	SWE			

NAD 83
292–1743
LAMBERT COORDINATES

CONTRACTOR _____ DATE STARTED _____
INSPECTOR _____ DATE COMPLETED _____

35490-30-D

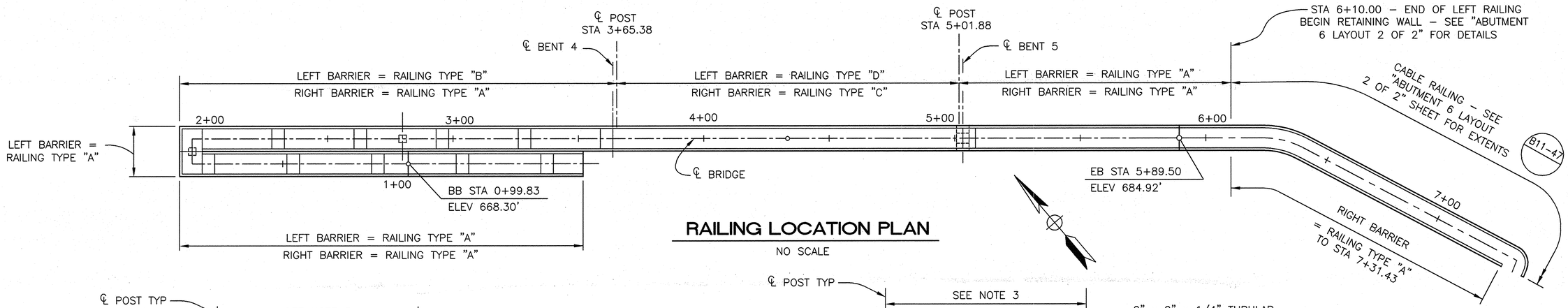

RAILING LOCATION PLAN

NO SCALE

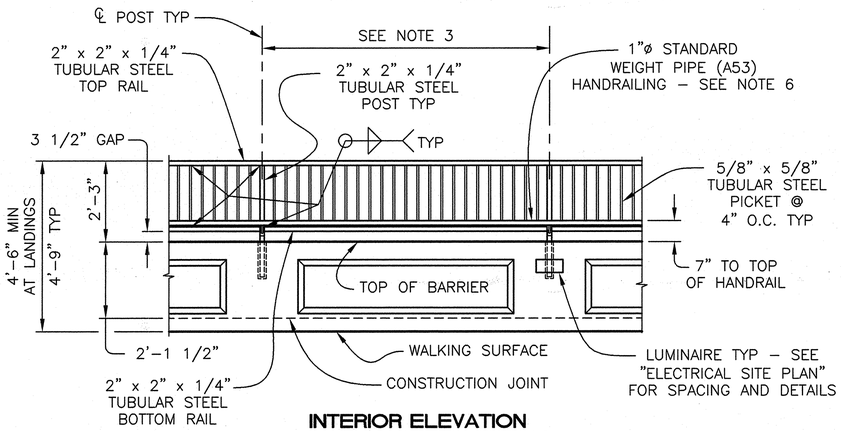

INTERIOR ELEVATION

RAILING TYPE "A"

1/2" = 1'-0"

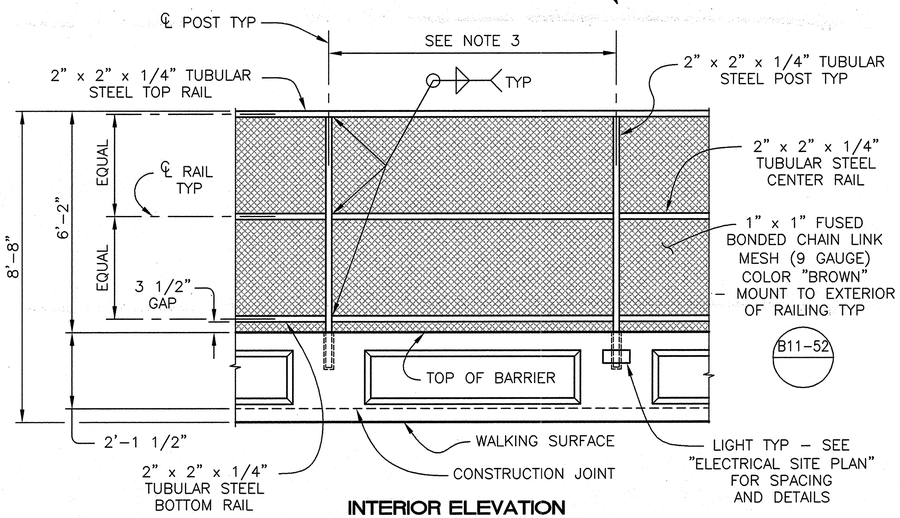

INTERIOR ELEVATION

RAILING TYPE "C"

1/2" = 1'-0"

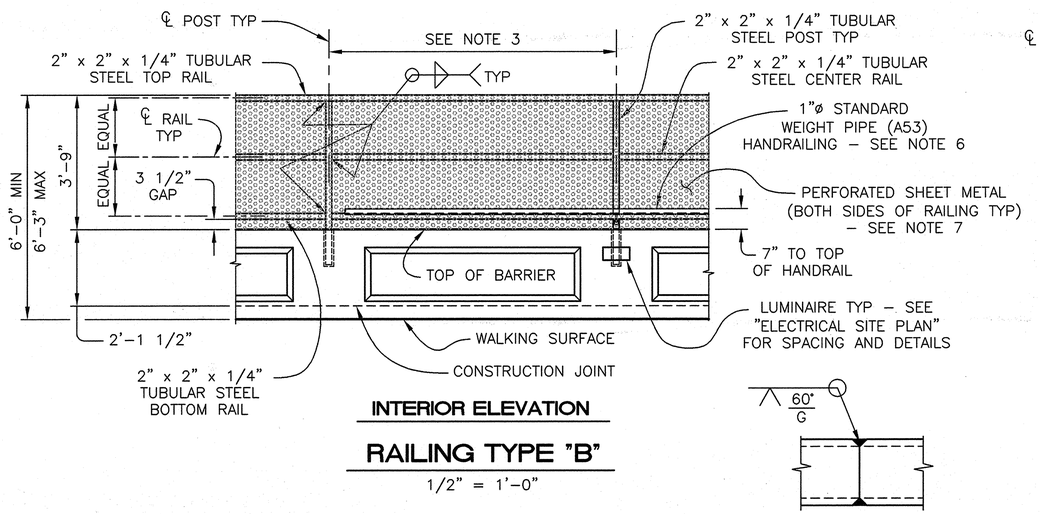

INTERIOR ELEVATION

RAILING TYPE "B"

1/2" = 1'-0"

TUBE-WELDED SPLICE

NO SCALE

NOTE: CONTRACTOR SHALL VERIFY ALL CONTROLLING FIELD DIMENSIONS BEFORE ORDERING OR FABRICATING ANY MATERIAL.

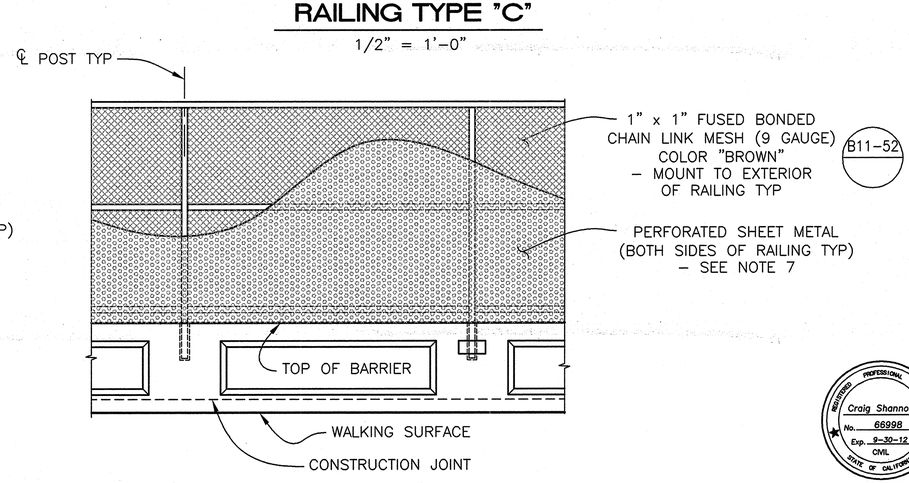

NOTE: FOR INFORMATION NOT SHOWN, SEE RAILING TYPE "C" DETAILS.

INTERIOR ELEVATION

RAILING TYPE "D"

1/2" = 1'-0"

NOTES:

1. ALL RAILING ELEMENTS TO BE SQUARE TUBULAR STEEL EXCEPT FOR ROUND TUBULAR HANDRAILING.
2. ALL POSTS, RAILS, AND PICKETS TO BE FINISHED WITH "FRAZEE" PAINT, COLOR "NAGARA BROWN" OR OWNER APPROVED EQUIVALENT.
3. POST SPACING NOT TO EXCEED 8'–0" AND POSTS SHALL BE VERTICAL.
4. TUBE SPLICE SLEEVES (PER CALTRANS STANDARD DRAWING NUMBER B11–51) SHALL BE LOACTED IN THE TUBES SPANNING DECK OR WALL JOINTS. INCREASE JOINT WIDTH IN TUBES TO MATCH EXPANSION JOINT WIDTH AND INCREASE SLEEVE WIDTH ACCORDINGLY.
5. TOP RAIL TUBE SHALL BE CONTINUOUS OVER NOT LESS THAN TWO POSTS EXCEPT A SHORT POST SPACING IS PERMITTED NEAR DECK OR WALL JOINTS, ELECTROLIERS, OR OTHER RAIL DISCONTINUITIES AS NOTED.
6. ATTACH HANDRAILING BRACKETS TO POSTS AS REQUIRED. HANDRAILING TO BE OFFSET 1 1/2" MINIMUM CLEAR FROM FACE OF POSTS. HANDRAILING REQUIRED ALONG LEFT AND RIGHT BARRIERS FROM STA 0+30.58 TO STA 3+63.88. BEGINNING AND ENDS OF HANDRAILING SHALL EITHER BE ROUNDED OR RETURNED SMOOTHLY TO POSTS.
7. PERFORATED SHEET METAL SHALL BE McNICHOLS 14 GAUGE 3/32" ROUND AND 3/16" STAGGER OR OWNER APPROVED EQUIVALENT. SEE "RAILING DETAILS NO. 3" SHEET FOR LIMITS.

CITY CONTRACT

SPECIFICATION NO. 4885 CITY CONTRACT, CIP NO. S–00941

PLANS FOR THE CONSTRUCTION OF:

TED WILLIAMS PARKWAY PEDESTRIAN OVERCROSSING AT SHOAL CREEK DRIVE

RAILING DETAILS NO. 1

REGISTERED PROFESSIONAL ENGINEER — Craig Shannon — No. 66998 — Exp. 9-30-12 — CIVIL — STATE OF CALIFORNIA

CITY OF SAN DIEGO, CALIFORNIA
ENGINEERING AND CAPITAL PROJECTS DEPARTMENT
SHEET 31 OF 46 SHEETS

W.O. NO. S–00941

A. Palaseyed FOR CITY ENGINEER — 4/7/2011 DATE

A. PALASEYED SECTION HEAD

M. KOLL PROJECT MANAGER

DESCRIPTION	BY	APPROVED	DATE	FILMED
ORIGINAL	SWE			

MAD 83
292–1743
LAMBERT COORDINATES

CONTRACTOR _____ DATE STARTED _____
INSPECTOR _____ DATE COMPLETED _____

35490-31-D

SIMON WONG ENGINEERING
9968 Hibert Street, Second Floor
San Diego, CA 92131
(858) 566–3113
Job No. 500–773

Craig Shannon DATE: 4-1-11
PREPARED BY: CRAIG SHANNON R.C.E. NO. 66998
REGISTRATION EXPIRES: 09/30/12

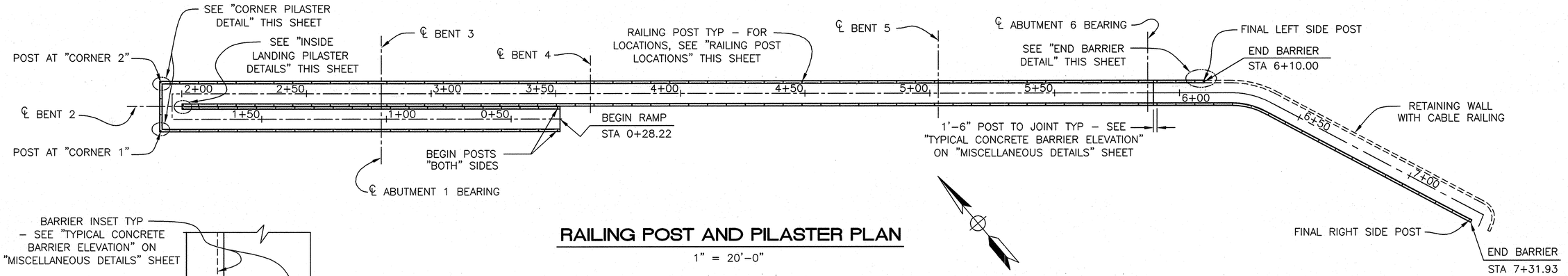

RAILING POST AND PILASTER PLAN

1" = 20'–0"

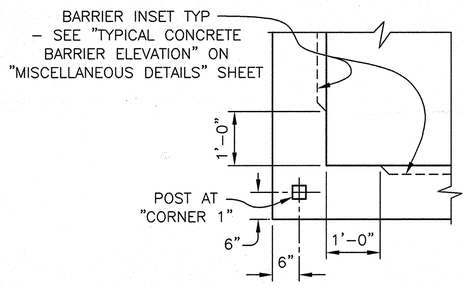

NOTE: "CORNER 1" SHOWN, "CORNER 2" SIMILAR.

CORNER PILASTER DETAIL

3/4" = 1'–0"

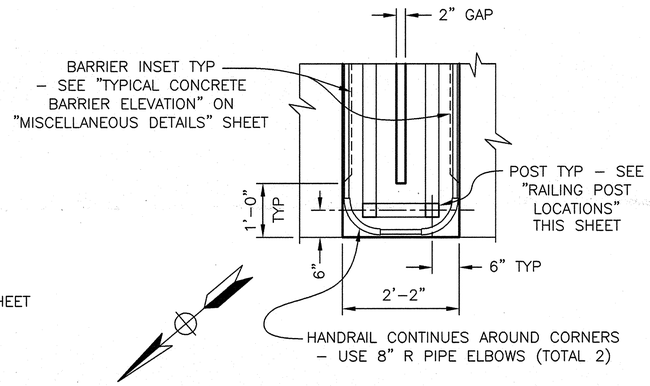

PLAN

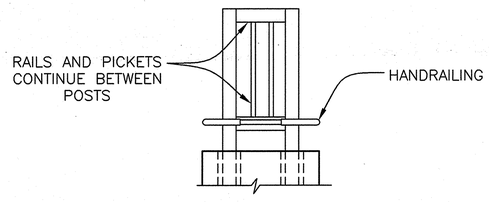

ELEVATION

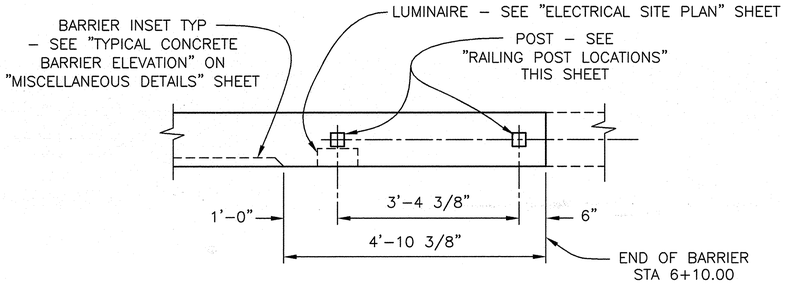

END BARRIER DETAIL

3/4" = 1'–0"

INSIDE LANDING PILASTER DETAILS

3/4" = 1'–0"

RAILING POST LOCATIONS

NOTE: SIDE OF PATH IS DETERMINED WHILE FACING UP STATION ALONG THE PATH CENTERLINE.

STATION	SIDE OF PATH	STATION	SIDE OF PATH	STATION	SIDE OF PATH
0+29.22	BOTH	2+44.51	BOTH	4+94.30	BOTH
0+37.01	BOTH	2+52.07	BOTH	5+01.88	BOTH
0+44.80	BOTH	2+59.62	BOTH	5+09.30	BOTH
0+52.59	BOTH	2+67.17	BOTH	5+16.73	BOTH
0+60.38	BOTH	2+74.73	BOTH	5+24.15	BOTH
0+68.17	BOTH	2+82.28	BOTH	5+31.58	BOTH
0+75.96	BOTH	2+89.84	BOTH	5+39.01	BOTH
0+83.75	BOTH	2+97.39	BOTH	5+46.44	BOTH
0+91.54	BOTH	3+04.95	BOTH	5+53.86	BOTH
0+99.33	BOTH	3+12.50	BOTH	5+61.29	BOTH
1+06.92	BOTH	3+20.05	BOTH	5+68.72	BOTH
1+14.52	BOTH	3+27.61	BOTH	5+76.14	BOTH
1+22.11	BOTH	3+35.16	BOTH	5+83.57	BOTH
1+29.70	BOTH	3+42.72	BOTH	5+91.00	BOTH
1+37.29	BOTH	3+50.27	BOTH	5+98.57	BOTH
1+44.89	BOTH	3+57.83	BOTH	6+06.14	BOTH
1+52.48	BOTH	3+65.38	BOTH	6+09.50	LEFT
1+60.07	BOTH	3+72.96	BOTH	6+13.70	RIGHT
1+67.66	BOTH	3+80.55	BOTH	6+21.41	RIGHT
1+75.26	BOTH	3+88.13	BOTH	6+30.03	RIGHT
1+81.46	RIGHT	3+95.71	BOTH	6+38.84	RIGHT
1+82.85	LEFT	4+03.30	BOTH	6+46.61	RIGHT
CORNER 1	LEFT	4+10.88	BOTH	6+54.28	RIGHT
1+87.75	LEFT	4+18.46	BOTH	6+61.94	RIGHT
1+94.24	LEFT	4+26.05	BOTH	6+69.61	RIGHT
CORNER 2	LEFT	4+33.63	BOTH	6+77.27	RIGHT
1+99.18	LEFT	4+41.21	BOTH	6+84.94	RIGHT
2+00.63	RIGHT	4+48.80	BOTH	6+92.60	RIGHT
2+06.74	BOTH	4+56.38	BOTH	7+00.27	RIGHT
2+14.29	BOTH	4+63.96	BOTH	7+07.93	RIGHT
2+21.85	BOTH	4+71.55	BOTH	7+15.60	RIGHT
2+29.40	BOTH	4+79.13	BOTH	7+23.26	RIGHT
2+36.96	BOTH	4+86.71	BOTH	7+30.93	RIGHT

NOTE: CONTRACTOR SHALL VERIFY ALL CONTROLLING FIELD DIMENSIONS BEFORE ORDERING OR FABRICATING ANY MATERIAL.

REGISTERED PROFESSIONAL ENGINEER — Craig Shannon — No. 66998 — Exp. 9-30-12 — CIVIL — STATE OF CALIFORNIA

SIMON WONG ENGINEERING
9968 Hibert Street, Second Floor
San Diego, CA 92131
(858) 566-3113
Job No. 500-773
Craig Shannon DATE: 4-1-11
PREPARED BY: CRAIG SHANNON R.C.E. NO. 66998
REGISTRATION EXPIRES: 09/30/12

CITY CONTRACT
SPECIFICATION NO. 4885 CITY CONTRACT, CIP NO. S-00941
PLANS FOR THE CONSTRUCTION OF:
TED WILLIAMS PARKWAY PEDESTRIAN OVERCROSSING AT SHOAL CREEK DRIVE
RAILING DETAILS NO. 2

CITY OF SAN DIEGO, CALIFORNIA
ENGINEERING AND CAPITAL PROJECTS DEPARTMENT
SHEET 32 OF 46 SHEETS

W.O. NO. S-00941

A. Palaseyed FOR CITY ENGINEER 4/7/2011 DATE

DESCRIPTION	BY	APPROVED	DATE	FILMED
ORIGINAL	SWE			

A. PALASEYED SECTION HEAD
M. KOLL PROJECT MANAGER
MAP 63
292-1743 LAMBERT COORDINATES
CONTRACTOR DATE STARTED
INSPECTOR DATE COMPLETED
35490-32-D

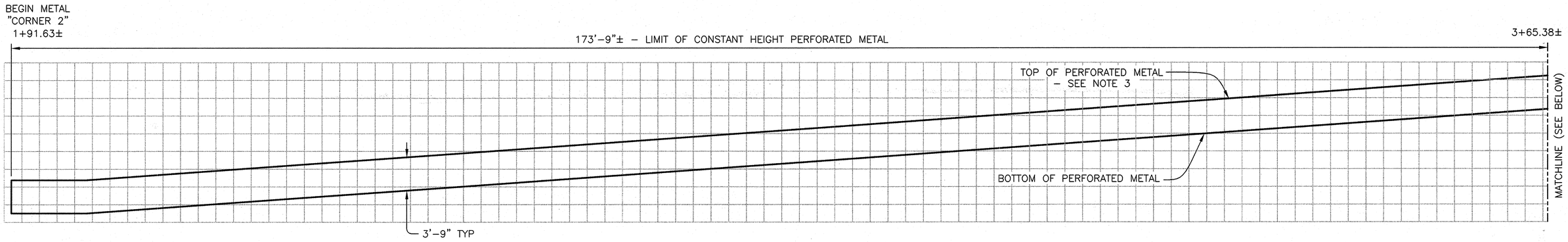

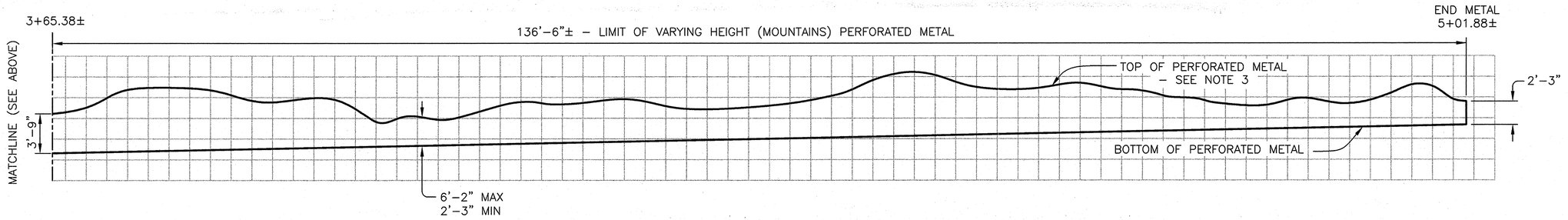

NOTES:

1. ELEVATION SHOWN LOOKING EAST. A 2'-0" GRID IS SHOWN FOR ESTIMATING PURPOSES.
2. APPROXIMATE TOTAL SQUARE FOOTAGE = 2,620 SQUARE FEET (1,310 SQUARE FEET EACH SIDE).
3. PERFORATED METAL TO BE FINISHED WITH "FRAZEE" PAINT, COLOR "WALLABIE" OR OWNER APPROVED EQUIVALENT.
4. TOP SURFACE OF PERFORATED METAL SHALL BE PROTECTED BY ATTACHING A LOW PROFILE STEEL EDGING MEMBER OR BY GRINDING CUT EDGES SUCH THAT THEY ARE SMOOTH TO THE TOUCH. ADDITIONAL MEMBERS OR GROUND SURFACES SHALL BE PAINTED TO MATCH THE COLOR OF THE PERFORATED METAL.

PERFORATED SHEET METAL ELEVATION

3/16" = 1'-0"

NOTE: CONTRACTOR SHALL VERIFY ALL CONTROLLING FIELD DIMENSIONS BEFORE ORDERING OR FABRICATING ANY MATERIAL.

REGISTERED PROFESSIONAL ENGINEER
Craig Shannon
No. 66998
Exp. 9-30-12
CIVIL
STATE OF CALIFORNIA

SIMON WONG ENGINEERING
9968 Hibert Street, Second Floor
San Diego, CA 92131
(858) 566-3113
Job No. 500-773
Craig Shannon DATE: 4-1-11
PREPARED BY CRAIG SHANNON R.C.E. NO. 66998
REGISTRATION EXPIRES: 09/30/12

CITY CONTRACT
SPECIFICATION NO. 4885 CITY CONTRACT, CIP NO. S-00941
PLANS FOR THE CONSTRUCTION OF:
TED WILLIAMS PARKWAY PEDESTRIAN OVERCROSSING AT SHOAL CREEK DRIVE
RAILING DETAILS NO. 3

CITY OF SAN DIEGO, CALIFORNIA
ENGINEERING AND CAPITAL PROJECTS DEPARTMENT
SHEET 33 OF 46 SHEETS

W.O. NO. S-00941

A. Palaseyed 4/7/2011
FOR CITY ENGINEER DATE

A. PALASEYED
SECTION HEAD

M. KOLL
PROJECT MANAGER

DESCRIPTION	BY	APPROVED	DATE	FILMED
ORIGINAL	SWE			

NAD 83
292-1743
LAMBERT COORDINATES

CONTRACTOR _____ DATE STARTED _____
INSPECTOR _____ DATE COMPLETED _____

35490-33-D

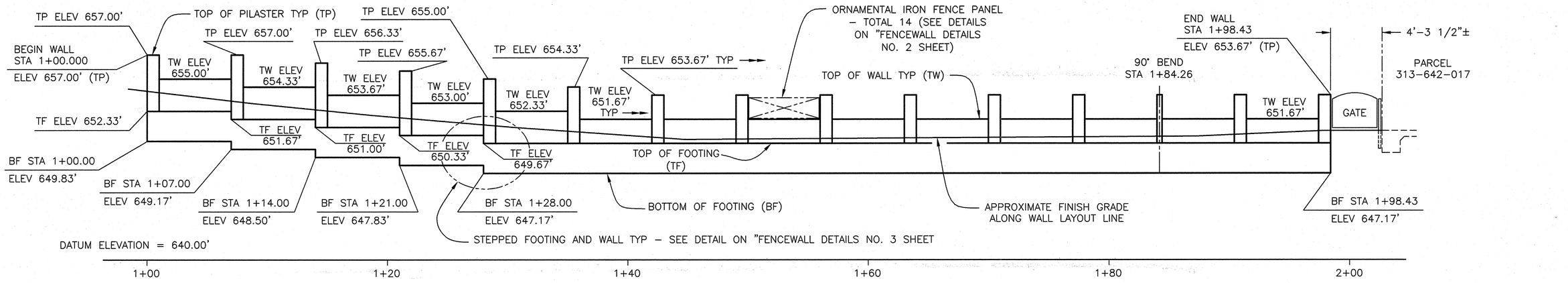

NOTES:

1. ALL ANGLE POINTS OCCUR AT CENTERLINE PILASTER.
2. PILASTER CAPS NOT SHOWN FOR CLARITY.

DEVELOPED ELEVATION

1/4" = 1'-0"

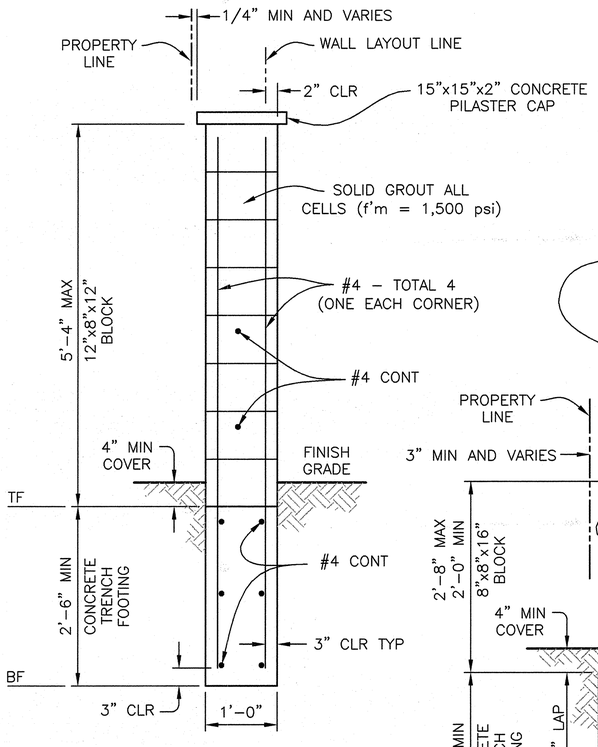

NOTE: FOR MORE INFORMATION, SEE "WALL TYPICAL SECTION."

PILASTER TYPICAL SECTION

1" = 1'-0"

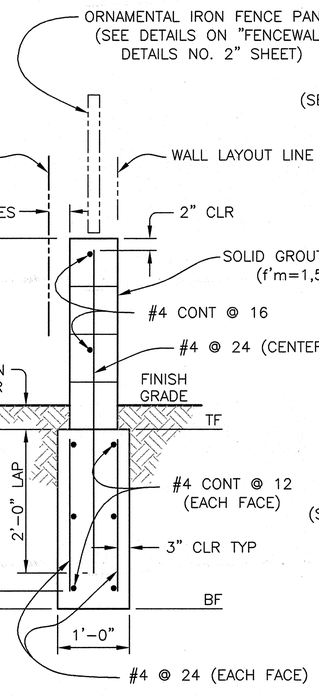

WALL TYPICAL SECTION

1" = 1'-0"

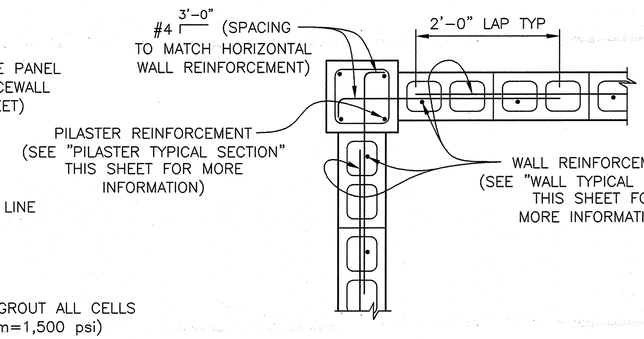

WALL

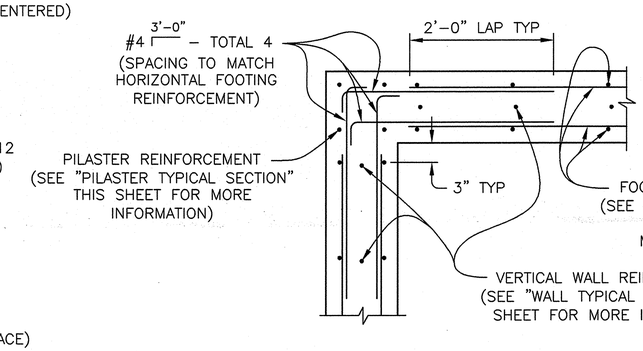

FOOTING

CORNER DETAILS

1" = 1'-0"

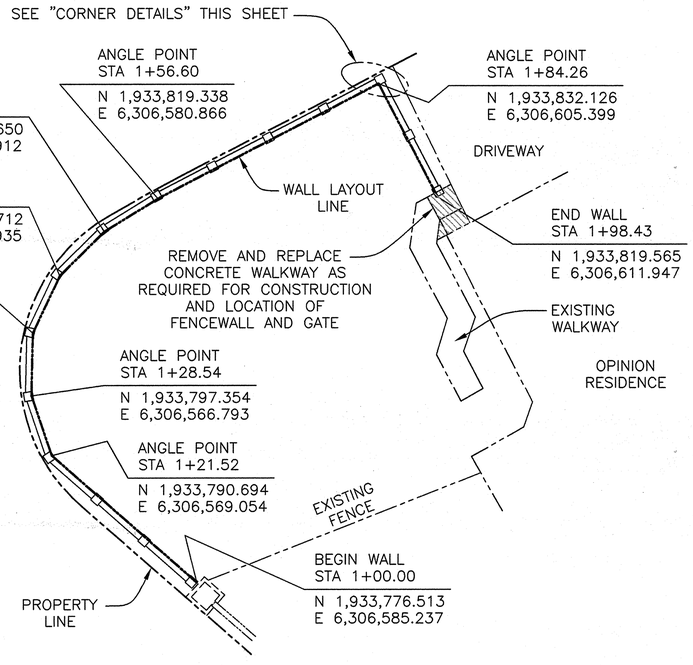

PLAN

1/8" = 1'-0"

NOTE: CONTRACTOR SHALL VERIFY ALL CONTROLLING FIELD DIMENSIONS BEFORE ORDERING OR FABRICATING ANY MATERIAL.

CITY CONTRACT

SPECIFICATION NO. 4885 CITY CONTRACT, CIP NO. S-00941

PLANS FOR THE CONSTRUCTION OF:

TED WILLIAMS PARKWAY PEDESTRIAN OVERCROSSING AT SHOAL CREEK DRIVE

FENCEWALL DETAILS NO. 1

REGISTERED PROFESSIONAL ENGINEER — Craig Shannon, No. 66998, Exp. 9-30-12, CIVIL, STATE OF CALIFORNIA

CITY OF SAN DIEGO, CALIFORNIA
ENGINEERING AND CAPITAL PROJECTS DEPARTMENT
SHEET **34** OF **46** SHEETS

W.O. NO. S-00941

A. Palaseyed — 4/7/2011
FOR CITY ENGINEER — DATE

A. PALASEYED, SECTION HEAD

DESCRIPTION	BY	APPROVED	DATE	FILMED
ORIGINAL	SWE			

M. KOLL, PROJECT MANAGER

NAD 83
292-1743
LAMBERT COORDINATES

CONTRACTOR _____ DATE STARTED _____
INSPECTOR _____ DATE COMPLETED _____

35490-34-D

SIMON WONG ENGINEERING
9968 Hibert Street, Second Floor
San Diego, CA 92131
(858) 586-3113

Job No. 500-773

Craig Shannon DATE: 4-1-11
PREPARED BY: CRAIG SHANNON R.C.E. NO. 66998
REGISTRATION EXPIRES: 09/30/12

DESIGN CRITERIA

MASONRY:	f'm = 1,500 psi Fm = 500 psi n = 25.7
MORTAR:	TYPE S (1,900 psi)
GROUT:	2,000 psi
CONCRETE:	f'c = 2,500 psi Fc = 1,000 psi n = 10
REINFORCING:	fy = 60,000 psi (GRADE 60) Fs = 24,000 psi
SOIL:	ALLOWABLE BEARING PRESSURE = 1,500 psf PASSIVE PRESSURE = 100 pcf
SEISMIC:	SITE CLASS = D S_{DS} = 0.737 g

GENERAL NOTES:

1. THE PROJECT SPECIFICATIONS SHALL CONFORM TO THE SPECIAL PROVISIONS FOR THE CONSTRUCTION OF THE TED WILLIAMS PARKWAY PEDESTRIAN OVERCROSSING AT SHOAL CREEK DRIVE UNLESS OTHERWISE NOTED.
2. THE STRUCTURAL DRAWINGS ARE TO BE USED IN CONJUNCTION WITH THE LANDSCAPE DRAWINGS.
3. ALL MASONRY BLOCK SHALL BE GROUTED SOLID.
4. FOOTING EXCAVATIONS SHALL BE OBSERVED BY THE PROJECT SOILS ENGINEER PRIOR TO PLACEMENT OF REINFORCING STEEL OR CONCRETE.
5. SPREAD FOOTING CONCRETE SHALL BE POURED NEATLY AGAINST UNDISTURBED EXISTING GROUND.
6. WHEN ONE CONTINUOUS HORIZONTAL REINFORCING BAR CANNOT BE USED, A LAP SPLICE OF 48-BAR DIAMETERS IS REQUIRED.
7. 1/2" MINIMUM CLEARANCE SHALL BE MAINTAINED BETWEEN REINFORCING STEEL SURFACE AND INSIDE OF MASONRY BLOCK.
8. THE DESIGN CRITERIA AND GENERAL NOTES PROVIDED ON THIS SHEET APPLY ONLY TO THE FENCE WALL DESIGNED BY SIMON WONG ENGINEERING. FOR OTHER WALLS, REFER TO THE DESIGN CRITERIA, GENERAL NOTES, AND DETAILS PROVIDED FOR THOSE PARTICULAR WALLS.

NOTE: CONTRACTOR SHALL VERIFY ALL CONTROLLING FIELD DIMENSIONS BEFORE ORDERING OR FABRICATING ANY MATERIAL.

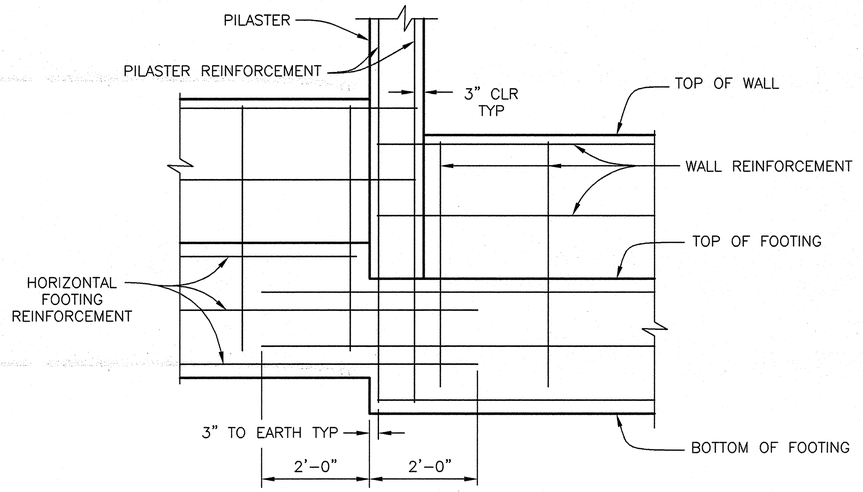

NOTES:

1. VERTICAL FOOTING REINFORCEMENT NOT SHOWN FOR CLARITY.
2. SEE WALL AND PILASTER TYPICAL SECTIONS ON "FENCEWALL DETAILS NO 1" SHEET.

STEPPED FOOTING AND WALL DETAIL

3/4" = 1'-0"

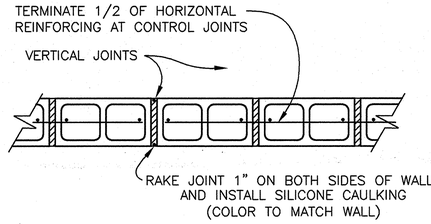

CONTROL JOINTS

AT 32'-0" MAX INTERVAL

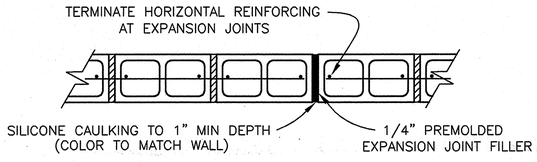

EXPANSION JOINTS

AT 96'-0" MAX INTERVAL

NOTE: PROVIDE EXPANSION JOINTS AT ALL WALL ANGLE POINTS.

MASONRY WALL JOINT DETAILS

1" = 1'-0"

REGISTERED PROFESSIONAL ENGINEER — Craig Shannon — No. 66998 — Exp. 9-30-12 — CIVIL — STATE OF CALIFORNIA

SIMON WONG ENGINEERING
9968 Hibert Street, Second Floor
San Diego, CA 92131
(858) 586-3113

Job No. 500-773

Craig Shannon DATE: 4-1-11

PREPARED BY: CRAIG SHANNON R.C.E. NO. 66998

REGISTRATION EXPIRES: 09/30/12

CITY CONTRACT

SPECIFICATION NO. 4885 CITY CONTRACT, CIP NO. S-00941

PLANS FOR THE CONSTRUCTION OF:

TED WILLIAMS PARKWAY PEDESTRIAN OVERCROSSING AT SHOAL CREEK DRIVE

FENCEWALL DETAILS NO. 3

CITY OF SAN DIEGO, CALIFORNIA
ENGINEERING AND CAPITAL PROJECTS DEPARTMENT
SHEET 35 OF 46 SHEETS

W.O. NO. S-00941

A. Palaseyed FOR CITY ENGINEER 4/7/2011 DATE

A. PALASEYED SECTION HEAD

M. KOLL PROJECT MANAGER

DESCRIPTION	BY	APPROVED	DATE	FILMED
ORIGINAL	SWE			

NAD 83
292-1743
LAMBERT COORDINATES

CONTRACTOR _____ DATE STARTED _____
INSPECTOR _____ DATE COMPLETED _____

35490-35-D

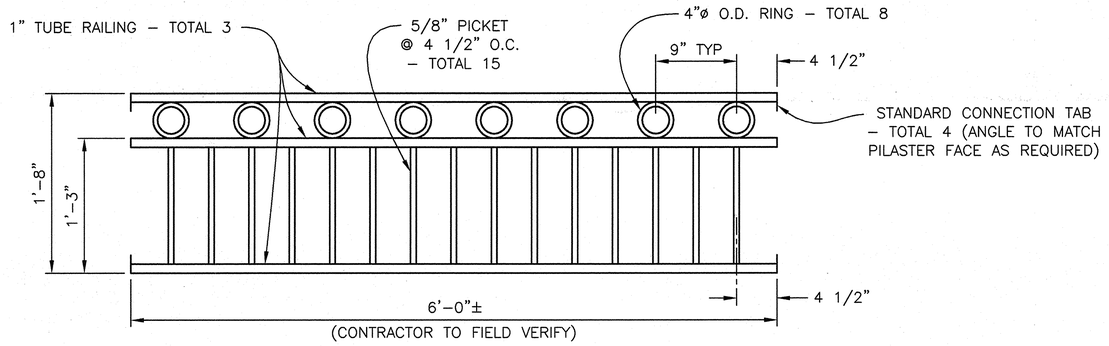

ORNAMENTAL IRON FENCE PANEL

1 1/2" = 1'–0"

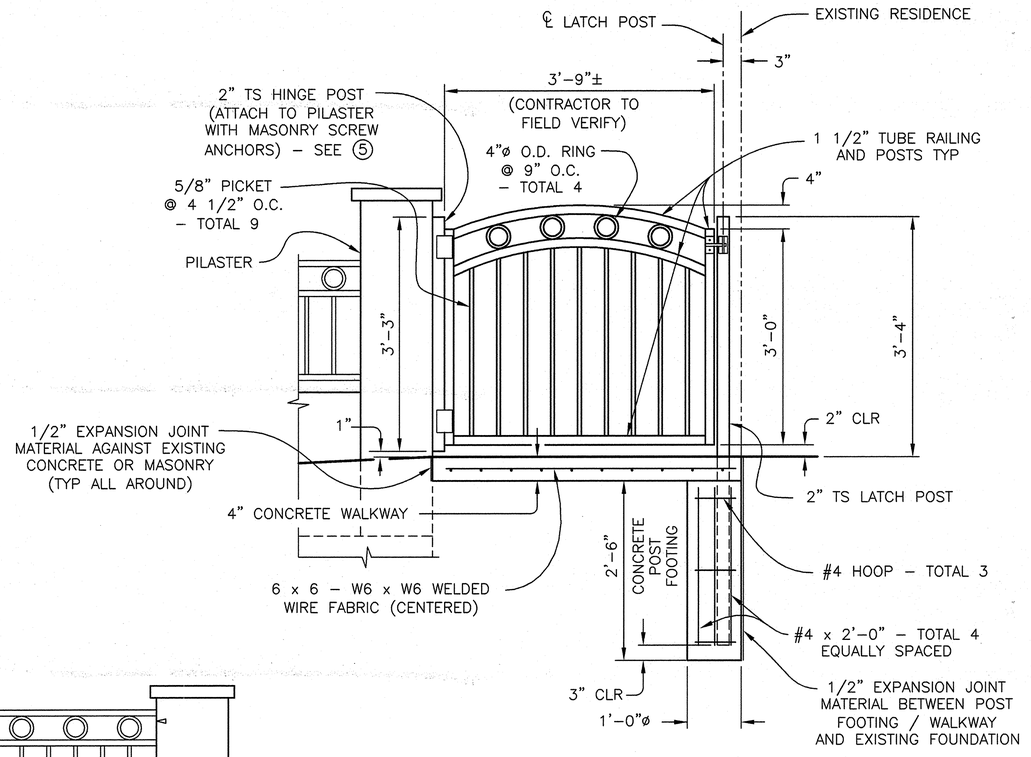

ORNAMENTAL IRON GATE

1" = 1'–0"

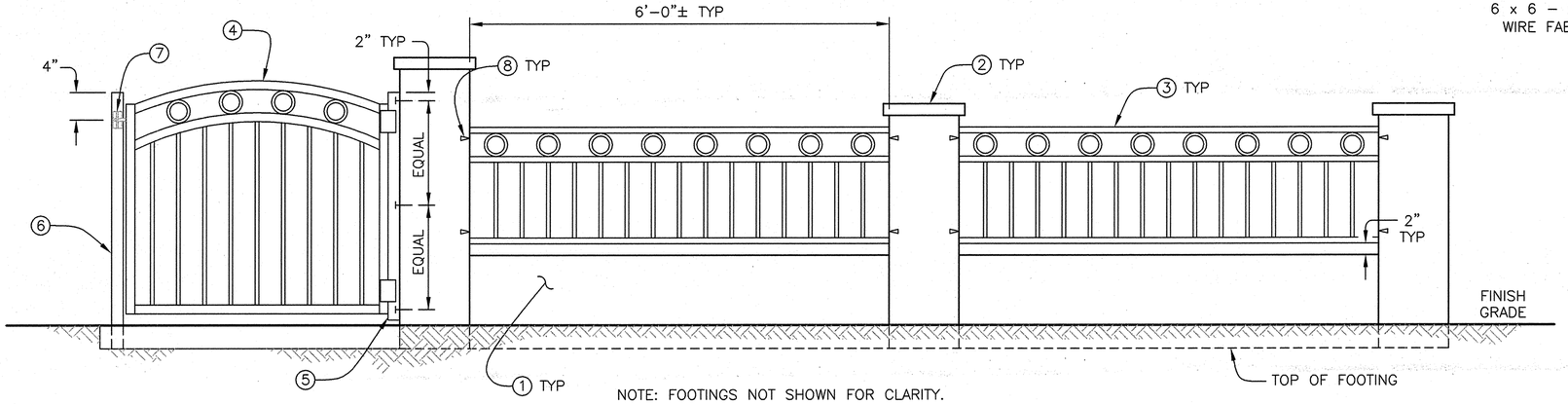

NOTE: FOOTINGS NOT SHOWN FOR CLARITY.

ARCHITECTURAL DETAILS

NO SCALE

① 8" CMU WALL WITH STUCCO FINISH AND PAINT TO MATCH EXISTING SITE WALL. SUBMIT COLOR SAMPLES TO ENGINEER FOR SELECTION AND APPROVAL.

② 12" x 12" CMU PILASTER WITH 15" x 15" x 2" CONCRETE CAP. STUCCO FINISH AND PAINT TO MATCH EXISTING SITE WALL. SUBMIT COLOR SAMPLES TO ENGINEER FOR SELECTION AND APPROVAL.

③ 20" HIGH ORNAMENTAL IRON FENCE. GALVANIZED WITH POLYURETHANE FINISH. PAINT TO MATCH EXISTING SITE WALL. SUBMIT COLOR SAMPLES TO ENGINEER FOR SELECTION AND APPROVAL. SEE "ORNAMENTAL IRON FENCE PANEL" DETAIL THIS SHEET FOR MORE INFORMATION.

④ SINGLE SWING ORNAMENTAL IRON GATE. GALVANIZED WITH POLYURETHANE FINISH. PAINT TO MATCH EXISTING SITE WALL. SUBMIT COLOR SAMPLES TO ENGINEER FOR SELECTION AND APPROVAL. SEE "ORNAMENTAL IRON GATE" DETAIL FOR MORE INFORMATION.

⑤ 2" TUBULAR STEEL (TS) POST WITH (3) 1/2"ø HILTI HUS–H SCREW ANCHOR (GALVANIZED) WITH 3" MINIMUM EMBED OR OWNER APPROVED EQUIVALENT. INSTALL PER MANUFACTURER'S INSTRUCTIONS. SEE ITEM 4 AND "ORNAMENTAL IRON GATE" DETAIL FOR MORE INFORMATION.

⑥ 2" TUBULAR STEEL LATCH POST WITH REINFORCED CONCRETE FOOTING. SEE ITEM 4 AND "ORNAMENTAL IRON GATE" DETAIL FOR MORE INFORMATION.

⑦ GRAVITY LATCH (GALVANIZED). PAINT TO MATCH ORNAMENTAL IRON GATE. ATTACH TO LATCH POST. LOCATE LATCH ON WEST FACE OF POST.

⑧ 3/16"ø x 1 3/4" HILTI KWIK–CON II (GALVANIZED) MASONRY FASTENER OR OWNER APPROVED EQUIVALENT. INSTALL PER MANUFACTURER'S INSTRUCTIONS.

NOTE: CONTRACTOR SHALL VERIFY ALL CONTROLLING FIELD DIMENSIONS BEFORE ORDERING OR FABRICATING ANY MATERIAL.

REGISTERED PROFESSIONAL ENGINEER — Craig Shannon — No. 66998 — Exp. 9–30–12 — CIVIL — STATE OF CALIFORNIA

SIMON WONG ENGINEERING
9968 Hibert Street, Second Floor
San Diego, CA 92131
(858) 566–3113
Job No. 500–773
Craig Shannon DATE: 4–1–11
PREPARED BY: CRAIG SHANNON R.C.E. NO. 66998
REGISTRATION EXPIRES: 09/30/12

CITY CONTRACT

SPECIFICATION NO. 4885 CITY CONTRACT, CIP NO. S–00941

PLANS FOR THE CONSTRUCTION OF:

TED WILLIAMS PARKWAY PEDESTRIAN OVERCROSSING AT SHOAL CREEK DRIVE

FENCEWALL DETAILS NO. 2

CITY OF SAN DIEGO, CALIFORNIA
ENGINEERING AND CAPITAL PROJECTS DEPARTMENT
SHEET 36 OF 46 SHEETS

W.O. NO. S–00941

A. Palaseyed 4/7/2011
FOR CITY ENGINEER DATE

A. PALASEYED
SECTION HEAD

M. KOLL
PROJECT MANAGER

DESCRIPTION	BY	APPROVED	DATE	FILMED
ORIGINAL	SWE			

NAD 83
292–1743
LAMBERT COORDINATES

CONTRACTOR _____ DATE STARTED _____
INSPECTOR _____ DATE COMPLETED _____

35490-36-D

LEGEND OF BORING OPERATIONS

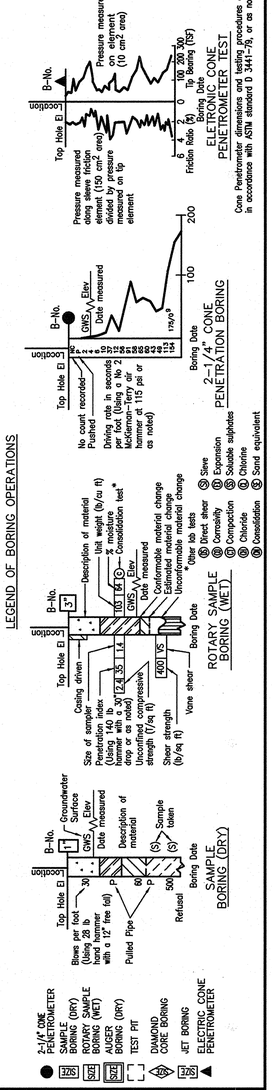

LEGEND OF EARTH MATERIALS

GRAVEL · SAND · SILT · CLAYEY SILT · PEAT and/or ORGANIC MATTER · FILL MATERIAL · IGNEOUS ROCK · SEDIMENTARY ROCK · METAMORPHIC ROCK · CLAY · SANDY CLAY or CLAYEY SAND · SANDY SILT or SILTY SAND · SILTY CLAY

CONSISTENCY CLASSIFICATION FOR SOILS

According to the Standard Penetration Test

Penetration Index (blows/Ft)	Granular	Cohesive
0–4	Very loose	Very soft
5–9	Loose	Soft
10–19	Slightly compact	Stiff
20–34	Compact	Very stiff
35–69	Dense	Hard
>70	Very dense	Very hard

NOTE: Classification of earth material as shown on this sheet is based upon field inspection and is not to be construed to imply mechanical analysis.

PLAN VIEW

SCALE : 1" = 40'

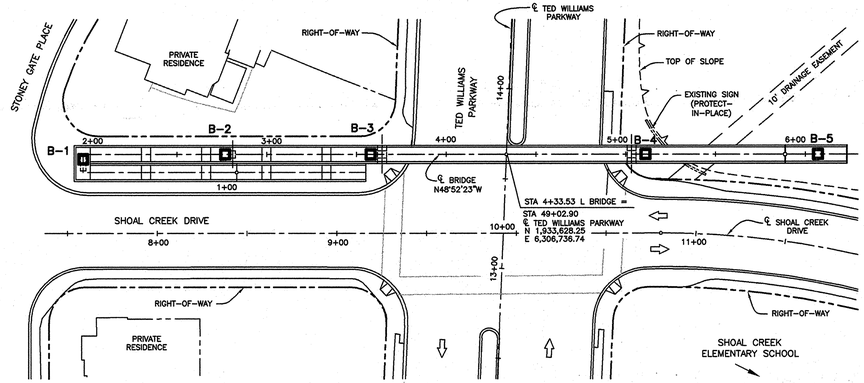

NOTES:

1) TEST BORING B–1 THROUGH B–4 WERE DRILLED USING A CME–85 DRILL RIG WITH HOLLOW–STEM AUGER. TEST BORING B–5 WAS EXCAVATED USING HAND AUGER.

2) THE APPROXIMATE BORING COORDINATES AND ELEVATION ARE BASED ON THE TOPOGRAPHIC MAP PROVIDED BY SIMON WONG ENGINEERING, SCALE 1"=40', UNDATED.

3) 2.4–INCH SAMPLES WERE TAKEN USING A MODIFIED CALIFORNIA SOIL–BARREL SAMPLER WITH AN INSIDE DIAMETER OF 2.4–INCH AND OUTSIDE DIAMETER OF 3–INCH.

4) A 140 LB CME AUTOMATIC HAMMER FALLING 30 INCHES WAS USED TO DRIVE SAMPLER

5) VISUAL CLASSIFICATION OF EARTH MATERIALS WAS BASED ON FIELD INSPECTION AND WAS CONFIRMED OR REVISED WITH LABORATORY TEST RESULTS.

6) THE BORING LOGS AND RELATED INFORMATION REPRESENT THE OPINION OF THE GEOLOGIST/ENGINEER AS TO THE CHARACTER OF THE MATERIAL AT THE LOCATIONS SHOWN. SOIL AND GROUNDWATER CONDITIONS BETWEEN ADJACENT TEST HOLES AND AT OTHER LOCATIONS MAY DIFFER FROM THOSE SHOWN. GROUNDWATER CONDITIONS MAY CHANGE WITH PASSAGE OF TIME.

PROFILE VIEW

VERTICAL SCALE: 1" = 5'–0"

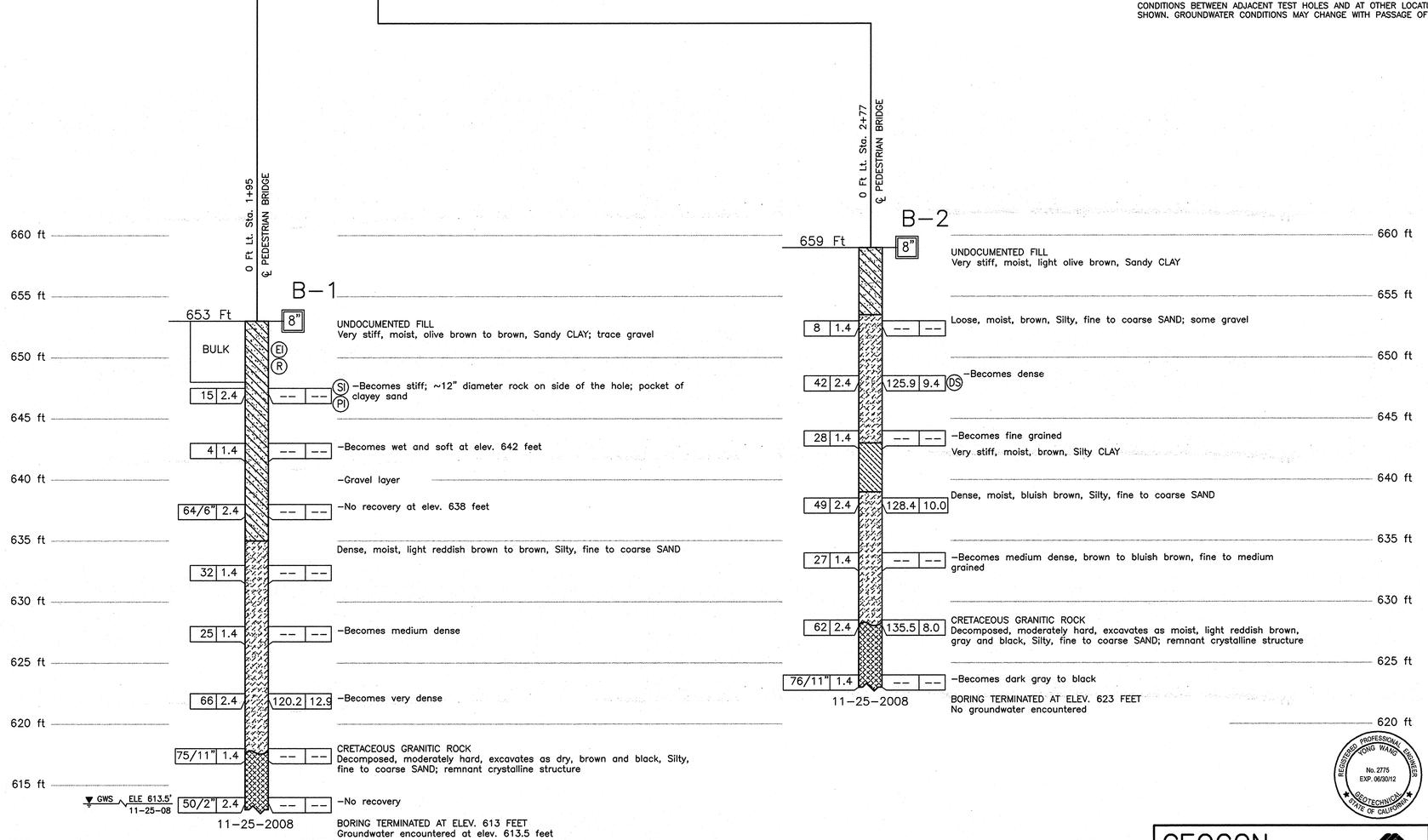

REGISTERED PROFESSIONAL ENGINEER · YONG WANG · No. 2775 EXP. 06/30/12 · GEOTECHNICAL · STATE OF CALIFORNIA

GEOCON INCORPORATED
GEOTECHNICAL CONSULTANTS
6960 FLANDERS DRIVE – SAN DIEGO, CALIFORNIA 92121–2974
PHONE 858 558–6900 – FAX 858 558–6159
DATE: April 5, 2011
PREPARED BY: YONG WANG R.G.E. NO. 2775
REGISTRATION EXPIRES: 06/30/12

CITY CONTRACT

SPECIFICATION NO. 4885 CITY CONTRACT, CIP NO. S–00941

PLANS FOR THE CONSTRUCTION OF:

TED WILLIAMS PARKWAY PEDESTRIAN OVERCROSSING AT SHOAL CREEK DRIVE

LOG OF TEST BORINGS NO. 1

CITY OF SAN DIEGO, CALIFORNIA
ENGINEERING AND CAPITAL PROJECTS DEPARTMENT
SHEET 37 OF 46 SHEETS

W.O. NO. S–00941

A. Palaseyed 4/7/2011
FOR CITY ENGINEER DATE

A. PALASEYED
SECTION HEAD

M. KOLL
PROJECT MANAGER

DESCRIPTION	BY	APPROVED	DATE	FILMED
ORIGINAL	GEOCON			

NAD 83
292–1743
LAMBERT COORDINATES

CONTRACTOR _____ DATE STARTED _____
INSPECTOR _____ DATE COMPLETED _____

35490–37–D

LEGEND OF BORING OPERATIONS

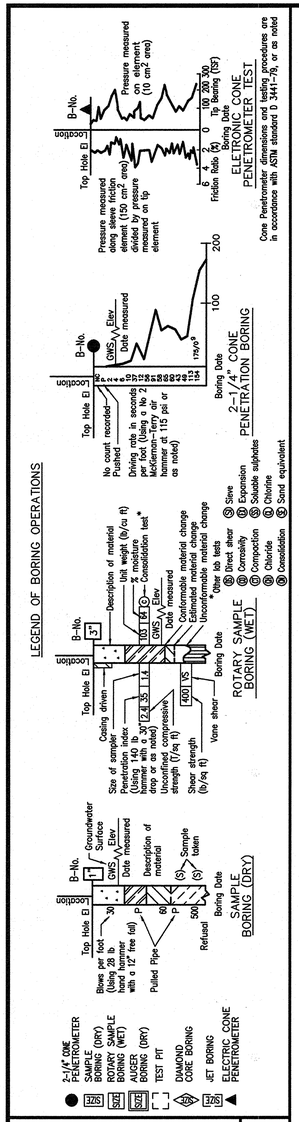

LEGEND OF EARTH MATERIALS

GRAVEL · SAND · SILT · CLAY · SANDY CLAY or CLAYEY SAND · SANDY SILT or SILTY SAND · SILTY CLAY · CLAYEY SILT · PEAT AND/OR ORGANIC MATTER · FILL MATERIAL · IGNEOUS ROCK · SEDIMENTARY ROCK · METAMORPHIC ROCK

CONSISTENCY CLASSIFICATION FOR SOILS

According to the Standard Penetration Test

Penetration resistance (blows/Ft)	Granular	Cohesive
0–4	Very loose	Very soft
5–9	Loose	Soft
10–19	Slightly compact	Stiff
20–34	Compact	Very stiff
35–69	Dense	Hard
>70	Very dense	Very hard

NOTE: Classification of earth material as shown on this sheet is based upon field inspection and is not to be construed to imply mechanical analysis.

PLAN VIEW

SCALE : 1" = 40'

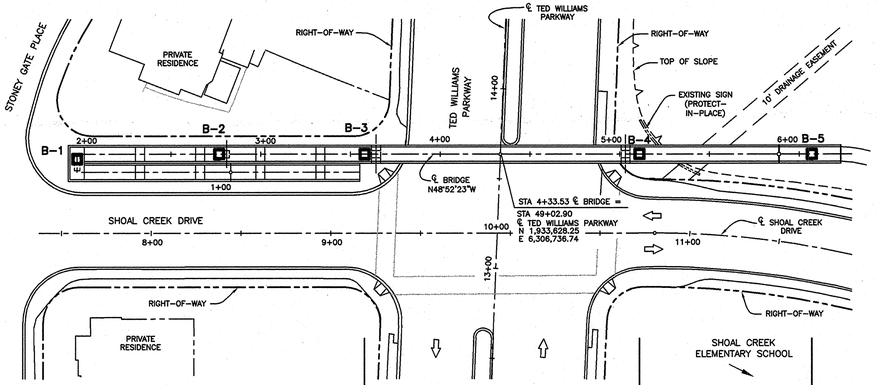

NOTES:

1) TEST BORING B–1 THROUGH B–4 WERE DRILLED USING A CME–85 DRILL RIG WITH HOLLOW–STEM AUGER. TEST BORING B–5 WAS EXCAVATED USING HAND AUGER.

2) THE APPROXIMATE BORING COORDINATES AND ELEVATION ARE BASED ON THE TOPOGRAPHIC MAP PROVIDED BY SIMON WONG ENGINEERING, SCALE 1"=40', UNDATED.

3) 2.4–INCH SAMPLES WERE TAKEN USING A MODIFIED CALIFORNIA SOIL–BARREL SAMPLER WITH AN INSIDE DIAMETER OF 2.4–INCH AND OUTSIDE DIAMETER OF 3–INCH.

4) A 140 LB CME AUTOMATIC HAMMER FALLING 30 INCHES WAS USED TO DRIVE SAMPLER

5) VISUAL CLASSIFICATION OF EARTH MATERIALS WAS BASED ON FIELD INSPECTION AND WAS CONFIRMED OR REVISED WITH LABORATORY TEST RESULTS.

6) THE BORING LOGS AND RELATED INFORMATION REPRESENT THE OPINION OF THE GEOLOGIST/ENGINEER AS TO THE CHARACTER OF THE MATERIAL AT THE LOCATIONS SHOWN. SOIL AND GROUNDWATER CONDITIONS BETWEEN ADJACENT TEST HOLES AND AT OTHER LOCATIONS MAY DIFFER FROM THOSE SHOWN. GROUNDWATER CONDITIONS MAY CHANGE WITH PASSAGE OF TIME.

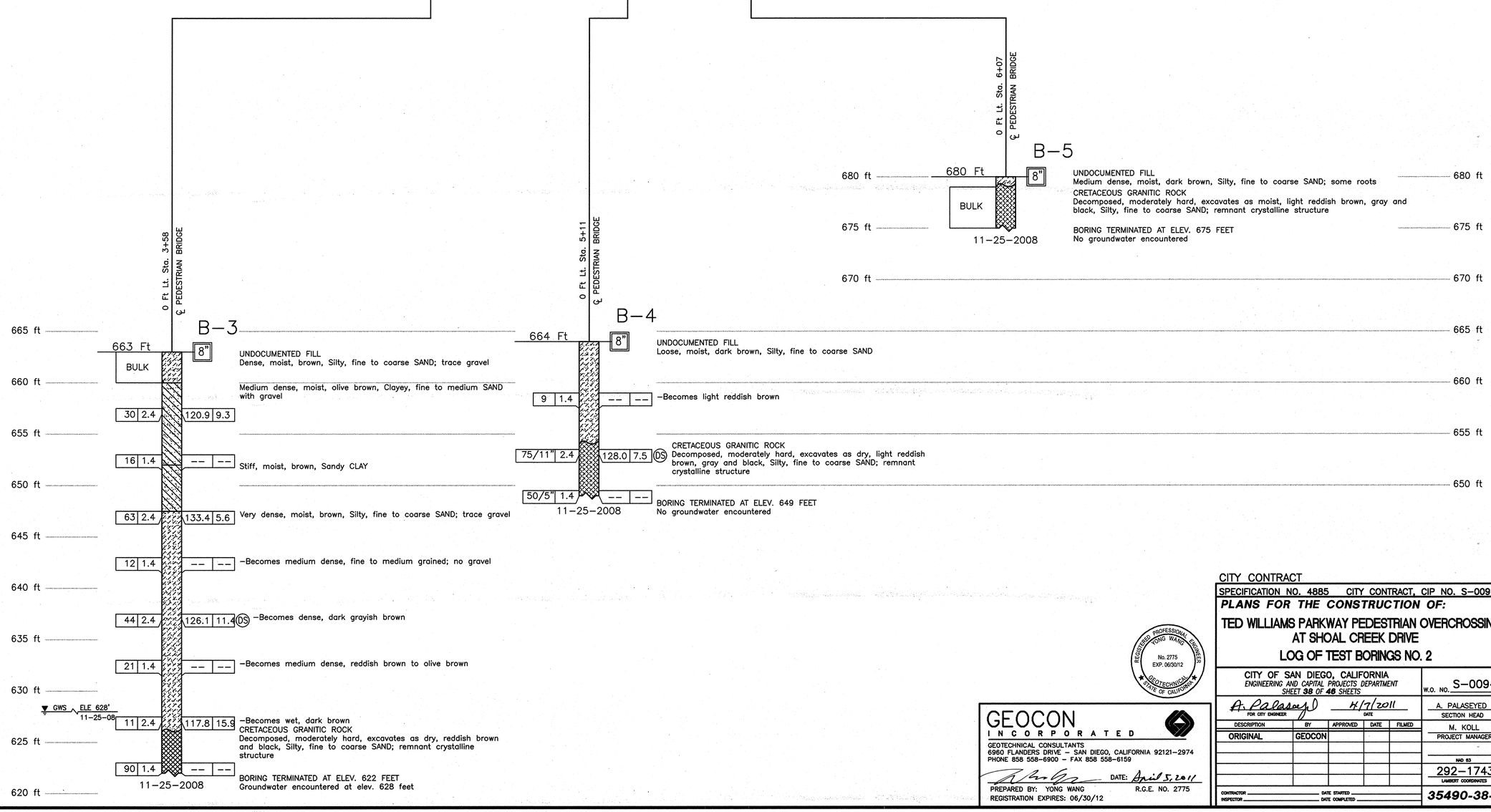

REGISTERED PROFESSIONAL ENGINEER · YONG WANG · No. 2775 EXP. 06/30/12 · GEOTECHNICAL · STATE OF CALIFORNIA

GEOCON INCORPORATED
GEOTECHNICAL CONSULTANTS
6960 FLANDERS DRIVE – SAN DIEGO, CALIFORNIA 92121–2974
PHONE 858 558–6900 – FAX 858 558–6159
PREPARED BY: YONG WANG
REGISTRATION EXPIRES: 06/30/12
DATE: April 5, 2011
R.G.E. NO. 2775

CITY CONTRACT

SPECIFICATION NO. 4885 CITY CONTRACT, CIP NO. S–00941

PLANS FOR THE CONSTRUCTION OF:

TED WILLIAMS PARKWAY PEDESTRIAN OVERCROSSING AT SHOAL CREEK DRIVE

LOG OF TEST BORINGS NO. 2

CITY OF SAN DIEGO, CALIFORNIA
ENGINEERING AND CAPITAL PROJECTS DEPARTMENT
SHEET 38 OF 46 SHEETS

W.O. NO. S–00941

A. Palaseyed FOR CITY ENGINEER 4/7/2011 DATE — A. PALASEYED, SECTION HEAD

DESCRIPTION	BY	APPROVED	DATE	FILMED
ORIGINAL	GEOCON			

M. KOLL, PROJECT MANAGER

NAD 83
292–1743
LAMBERT COORDINATES

CONTRACTOR _____ DATE STARTED _____
INSPECTOR _____ DATE COMPLETED _____

35490–38–D

ELECTRICAL SYMBOLS:

- DETAIL NUMBER DESIGNATION
- SHEET DETAIL APPEARS ON
- SHEET DETAIL REFERENCED FROM
- MECHANICAL SCHEDULE REFERENCE
- NOTE REFERENCE
- 3/E39 — DETAIL OR SECTION REFERENCES IN NOTES
- +48" — INDICATES MOUNTING HEIGHT ABOVE FINISHED FLOOR. CENTERLINE OF OUTLET BOX UON.
- SUBSCRIPT ADJACENT TO LIGHTING FIXTURE INDICATES: 1,2,3 etc. = CIRCUIT NUMBERS; a,b,c etc. = SWITCH IDENTIFICATION
- NEW ELECTRICAL DUCT THROUGH EXISTING A/C PAVING, CONCRETE OR LANDSCAPE. CUT PATCH AND REPAIR TO MATCH EXISTING.
- WIRING OR CONDUIT CONCEALED IN STRUCTURE
- WIRING OR CONDUIT EXPOSED.
- R — EXISTING CONDUIT AND WIRING TO BE REMOVED.
- A — EXISTING WIRING TO BE REMOVED, ABANDON CONDUIT.
- X — EXISTING CONDUIT TO REMAIN.
- XN — PROVIDE WIRE IN EXISTING CONDUIT
- XR — REMOVE EXISTING WIRE, EXISTING CONDUIT TO REMAIN.
- CONDUIT TURNED UP. — CONDUIT TURNED DOWN.
- T — COMMUNICATIONS DUCT BANK (TELEPHONE)
- TV — COMMUNICATIONS DUCT BANK (CABLE TV)
- EMS — EMERGENCY MANAGEMENT SYSTEM CONDUIT
- E — UNDERGROUND CONDUIT/DUCT BANK
- LFA 2 ab — LUMINARES. (ARROW INDICATES AIMING DIRECTION.) (AIM AS DIRECTED.)
- SUBSCRIPT ADJACENT TO LUMINAIRE SYMBOLS INDICATES: LFA,DCB,ELA etc. = LUMINAIRE IDENTIFICATION (REFER TO LUMINAIRE SCHEDULE) 1,2,3 etc. = CIRCUIT IDENTIFICATION; a,b,c etc. = SWITCH CONTROL; N = NIGHT/SECURITY LIGHT
- SYMBOLS ON LIGHTING PLAN INDICATE LUMINARES, UNLESS NOTED OTHERWISE. REFER TO LUMINARE SCHEDULE AND PROJECT SPECIFICATION FOR ADDITIONAL INFORMATION.
- SHADING INDICATES EMERGENCY LUMINAIRES SUPPLIED WITH EMERGENCY BATTERY PACK AND/OR CONNECTED TO LIFE SAFETY POWER SYSTEM. (ARROW INDICATES AIMING DIRECTION.) (AIM AS DIRECTED.)
- HATCHING INDICATES LUMINAIRES CONNECTED TO (CRITICAL) (STANDBY) POWER SYSTEM.
- TANDEM WIRED LUMINAIRES. EQUIPMENT SHALL BE CONNECTED WITH PRE-WIRED FLEXIBLE HARNESS.
- LIGHTED EXIT SIGN. TOP MOUNTED ON CEILING OR STEM MOUNTED AT HEIGHT NOTED. SHADED SIDE INDICATES FACE. PROVIDE CHEVRONS TO INDICATE DIRECTION OF TRAVEL AS SHOWN BY ARROWS.
- DOUBLE SIDED EXIT SIGN. PROVIDE WITH CHEVRONS TO INDICATE DIRECTION OF TRAVEL AS SHOWN BY ARROWS.
- BACK OR END MOUNTED EXIT SIGN, AT HEIGHT NOTED. "L" INDICATES LOW LEVEL. PROVIDE WITH CHEVRONS TO INDICATE DIRECTION OF TRAVEL AS SHOWN BY ARROWS.

- ROH — RELOCATED EXISTING OVERHEAD LINE
- XOH — EXISTING OVERHEAD LINE TO REMAIN
- OH — REMOVE EXISTING OVERHEAD LINE
- HOMERUN TO PANELBOARD. CROSS MARKS, IF SHOWN, INDICATE NUMBER OF #12 WIRES, UON. FEEDER OR CIRCUIT NUMBERS AS NOTED. GROUND WIRE REQUIRED BUT NOT INCLUDED IN COUNT. (HA-1,3)
- #10 — NUMBER ADJACENT TO CROSS MARKS INDICATES WIRE SIZE OTHER THAN #12. GROUND WIRE REQUIRED BUT NOT INCLUDED IN COUNT.
- DISTRIBUTION PANEL OR SWITCHBOARD
- SURFACE FLUSH — PANELBOARD.
- 1/4HP — MOTOR CONNECTION WITH HP NOTED.
- J — JUNCTION OR OUTLET BOX. CEILING OR WALL MOUNTED AS INDICATED. LOCATE ABOVE ACCESSIBLE CEILINGS, UON.
- GROUNDING ELECTRODE.
- CIRCUIT BREAKER, "M" DENOTES MOTOR PROTECTOR TYPE.
- TERMINAL.
- MOTOR STARTER WITH THERMAL OVERLOADS (NUMBER INDICATES STARTER SIZE.)
- "O" — CABLE TERMINATOR.
- TRANSFORMER – SINGLE LINE DIAGRAM.
- CT; CURRENT TRANSFORMER
- FUSED CUTOUT.
- NORMALLY CLOSED / NORMALLY OPEN CONTACTS.
- M — KILOWATT HOUR METER.
- C — CONTACTOR
- E — ELECTRICAL UNDERGROUND PULLBOX OR MANHOLE
- T — COMMERCIAL TELEPHONE UNDERGROUND PULL BOX OR MANHOLE
- M — SF6 SWITCH
- T — PAD-MOUNTED TRANSFORMER
- C — CABLE TV UNDERGROUND PULL BOX
- TC — TIMECLOCK

ABBREVIATIONS

A/C	AIR CONDITIONER
A.F.F.	ABOVE FINISHED FLOOR
A.F.G.	ABOVE FINISHED GRADE
A OR AMP	AMPERE
CB	CIRCUIT BREAKER
C	CONDUIT
CLG.	CEILING
C.O.	CONDUIT ONLY
CONN	CONNECT, CONNECTION
CR	COLD ROLLED (STEEL)
DDC.	DIRECT DIGITAL CONTROL
DISC.	DISCONNECT
DIST.	DISTRIBUTION
EMS	EMERGENCY MANAGEMENT SYSTEM
EX.	EXISTING
FA	FIRE ALARM
FACP	FIRE ALARM CONTROL PANEL
FATC	FIRE ALARM TERMINAL CABINET
FLEX.	FLEXIBLE
GFI	GROUND FAULT INTERRUPTER
GRD	GROUND
HP	HORSEPOWER
HZ	HERTZ
J-BOX OR JB	JUNCTION BOX
KVA	KILOVOLT AMP
KW	KILOWATT
LT.	LIGHT
LT. FIX.	LIGHT FIXTURE
LTG	LIGHTING
MCB.	MAIN CIRCUIT BREAKER
MTG.	MOUNTING
MLO	MAIN LUGS ONLY
NL	NIGHT LIGHT
NTS	NOT TO SCALE
NO.	NUMBER
NF	NONFUSIBLE
PB	PULLBOX
PH OR ø	PHASE
PNL.	PANEL
PVC	POLYVINYL CHLORIDE
REC	RECESSED
RECPT	RECEPTACLE
R/O	RECEPTACLE OUTLET
SW.	SWITCH
SWBD.	SWITCHBOARD
SQ.	SQUARE
TELE	TELEPHONE
TRANSF.	TRANSFORMER
TYP.	TYPICAL
UON	UNLESS OTHERWISE NOTED
V	VOLT
VA	VOLTAMPERE
W	WATT OR WIRE
WP	WEATHERPROOF

NOTE: CONTRACTOR SHALL VERIFY ALL CONTROLLING FIELD DIMENSIONS BEFORE ORDERING OR FABRICATING ANY MATERIAL.

B16435 REGISTERED PROFESSIONAL ENGINEER DALE M. FRANCHAK No. 11533 Exp. 6/30/12 ELECTRICAL STATE OF CALIFORNIA

IMPORTANT NOTICE

SECTION 4216/4217 OF THE GOVERNMENT CODE REQUIRES A DIG ALERT IDENTIFICATION NUMBER BE ISSUED BEFORE A "PERMIT TO EXCAVATE" WILL BE VALID. FOR YOUR DIG ALERT I.D. NUMBER CALL UNDERGROUND SERVICE ALERT 1-800-227-2600 OR DIAL 811 TWO WORKING DAYS BEFORE YOU DIG.

SPARLING | ILA ZAMMIT
9191 Towne Centre Drive, Suite 220
San Diego, California 92122
858.622.2700 800.667.0610
www.sparling.com

Dale M. Franchak DATE: 4-5-11

PREPARED BY: DALE FRANCHAK P.E. No. 11533
REGISTRATION EXPIRES: 06/30/12

CITY CONTRACT

E0.1

SPECIFICATION NO. 4885 CITY CONTRACT, CIP NO. S-00941

PLANS FOR THE CONSTRUCTION OF:

TED WILLIAMS PARKWAY PEDESTRIAN OVERCROSSING AT SHOAL CREEK DRIVE

ELECTRICAL SYMBOLS + ABBREVIATIONS

CITY OF SAN DIEGO, CALIFORNIA
ENGINEERING AND CAPITAL PROJECTS DEPARTMENT
SHEET 39 OF 48 SHEETS

W.O. NO. S-00941

A. Palaseyed 4/7/2011
FOR CITY ENGINEER DATE

A. PALASEYED
SECTION HEAD

M. KOLL
PROJECT MANAGER

DESCRIPTION	BY	APPROVED	DATE	FILMED
ORIGINAL	ILAZ			

NAD 83
292-1743
LAMBERT COORDINATES

CONTRACTOR _____ DATE STARTED _____
INSPECTOR _____ DATE COMPLETED _____

35490-39-D

TYPE III–B SERVICE (120/240V) EQUIPMENT LEGEND		
ITEM NO.	COMPONENT	NAME PLATE DESCRIPTION
(1)	NEUTRAL LUG	
(2)	LANDING LUG (NOTE 2)	
(3)	TEST BYPASS FACILITY	
(4)	METER SOCKET AND SUPPORT	
(5)	TERMINAL BLOCKS	
(6)	NEUTRAL BUS	
(7)	GROUND BUS	
(8)	GROUNDING ELECTRODE (EXISTING)	
(9)	NOT USED	
(10)	NOT USED	
(11)	NOT USED	
(12)	NOT USED	
(13)	NOT USED	
(14)	NOT USED	
(15)	100A, 240V, 2P, CB	MAIN BREAKER
(16)	15A, 120V, 1P, CB, GFCI	LIGHTING
(17)	NOT USED	
(18)	NOT USED	
(19)	20A, 120V, 1P, CB	IRRIGATION
(20)	15A, 120V, 1P, CB	LIGHTING CONTROL
(21)	PHOTOELECTRIC UNIT (NOTE 3)	
(22)	15A, 1P, TEST SWITCH	LIGHTING TEST SWITCH
(23)	60A, 4P NO MECHANICALLY HELD CONTACTOR	LIGHTING
(24)	NOT USED	
(25)	NOT USED	
(26)	20A, 120V, 1P, CB	SPARE

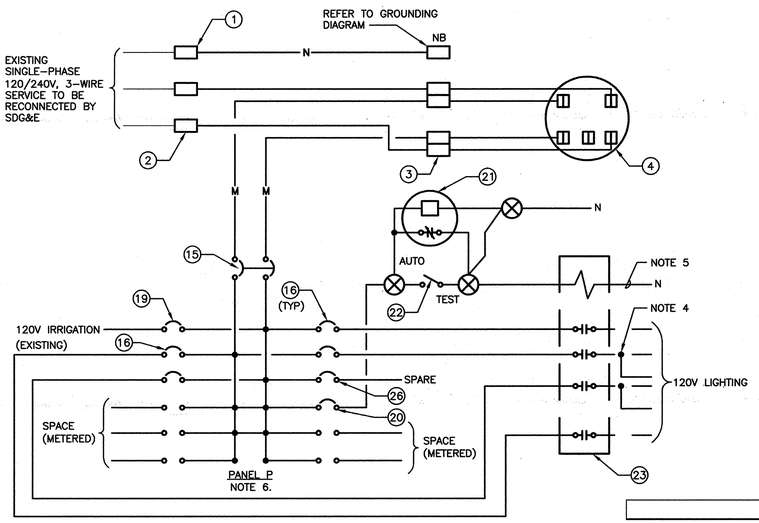

METER PEDESTAL WIRING DIAGRAM

NOTES:

1. METER SOCKETS SHALL BE 5 CLIP TYPE.
2. THE LANDING LUG SHALL BE SUITABLE FOR MULTIPLE CONDUCTORS.
3. TYPE 5 PHOTOELECTRIC CONTROL SHALL BE USED.
4. SPLICE MULTIPLE HOMERUNS AS INDICATED ON PLAN.
5. PROVIDE INDIVIDUAL NEUTRAL CONDUCTOR FOR EACH G.F.C.I. LIGHTING BRANCH CIRCUIT.
6. PANEL SHORT CIRCUIT INTERRUPTING RATING (AIC) SHALL BE 42,000A MINIMUM. FOR ADDITIONAL REQUIREMENTS REFER TO PANEL SCHEDULE.

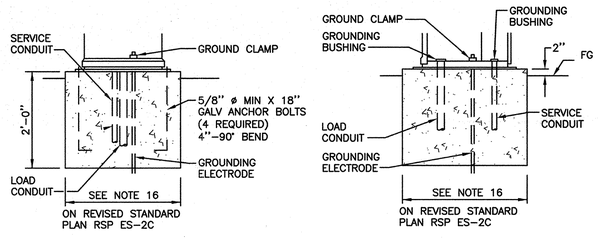

METER PEDESTAL EQUIPMENT ENCLOSURE FOUNDATION DETAILS

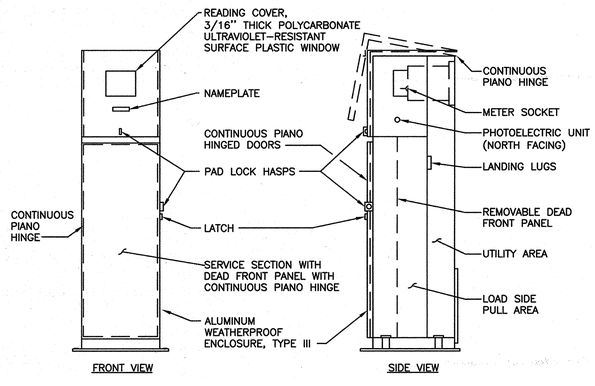

METER PEDESTAL ENCLOSURE WITH PROVISIONS FOR ONE 100A METER

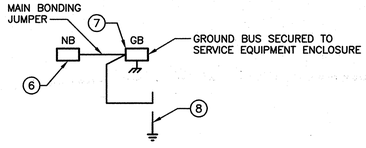

GROUNDING DIAGRAM

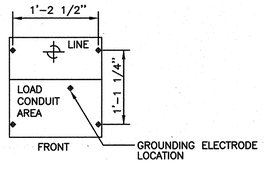

BASE FOR EQUIPMENT ENCLOSURE

(1) E0.2 **METER PEDESTAL DETAILS**

NOTE: CONTRACTOR SHALL VERIFY ALL CONTROLLING FIELD DIMENSIONS BEFORE ORDERING OR FABRICATING ANY MATERIAL.

VOLTAGE DROP CALCULATION

V5.07

PROJECT: TED WILLIAMS PARKWAY PEDESTRIAN OVERCROSSING AT SHOAL CREEK DRIVE — SYSTEM VOLTAGE: 120
NUMBER: 1286-002 — SYSTEM PHASE: 1
VOLT DROP CALCULATION BASED ON IEEE Std. 241-1983, CHAPTER 3.6 75 DEGREE WIRE; LENGTHS SHOWN ARE FOR CALCULATION PURPOSES ONLY, NOT FOR BIDDING.
PREPARED BY: ILA | Zammit Engineering, San Diego, CA — METRIC (Y/N): N — Date: MAR 17 2010

LOAD DESCRIPTION	NOMINAL VOLTAGE	SYSTEM PHASE	STARTING VOLTAGE	POWER FACTOR	LENGTH OF CIRCUIT IN FEET	CURRENT IN AMPS	INITIAL WIRE SIZE	INITIAL WIRE RUNS	FINAL WIRE SIZE	FINAL WIRE RUNS	INITIAL EQ GND WIRE SIZE	REQ'D GND WIRE SIZE	LINE TO NEUTRAL Y/N	MAGNETIC CONDUIT Y/N	WIRE TYPE Copper Aluminum	VOLTS DROPPED	SINGLE RUN PERCENT	ADD % TO OTHER LOAD Y/N	ADD TO WHAT LOAD	ENDING VOLTAGE	TOTAL PERCENT DROPPED
Ped to YS12	120	1	120.0	100%	90.0	6.0	12	1	10	1	12	10	Y	N	C	0.6	0.54%	N		119.4	0.54%
YS12-YS13	120	1	119.4	100%	16.0	5.8	12	1	10	1	12	10	Y	N	C	0.1	0.09%	Y	Ped to YS12	119.2	0.63%
YS13-YS14	120	1	119.2	100%	16.0	5.5	12	1	10	1	12	10	Y	N	C	0.1	0.09%	Y	YS12-YS13	119.1	0.72%
YS14-YS15	120	1	119.1	100%	16.0	5.3	12	1	10	1	12	10	Y	N	C	0.1	0.08%	Y	YS13-YS14	119.0	0.80%
YS15-YS16	120	1	119.0	100%	16.0	5.0	12	1	10	1	12	10	Y	N	C	0.1	0.08%	Y	YS14-YS15	118.9	0.88%
YS16-YS17	120	1	118.9	100%	16.0	4.8	12	1	10	1	12	10	Y	N	C	0.1	0.08%	Y	YS15-YS16	118.8	0.96%
YS17-YS18	120	1	118.8	100%	16.0	4.5	12	1	10	1	12	10	Y	N	C	0.1	0.07%	Y	YS16-YS17	118.8	1.03%
YS18-YS19	120	1	118.8	100%	16.0	4.3	12	1	10	1	12	10	Y	N	C	0.1	0.07%	Y	YS17-YS18	118.7	1.10%
YS19-YS20	120	1	118.7	100%	16.0	4.0	12	1	10	1	12	10	Y	N	C	0.1	0.06%	Y	YS18-YS19	118.6	1.16%
YS20-YS21	120	1	118.6	100%	16.0	3.8	12	1	10	1	12	10	Y	N	C	0.1	0.06%	Y	YS19-YS20	118.5	1.22%
YS21-YS22	120	1	118.5	100%	16.0	3.5	12	1	10	1	12	10	Y	N	C	0.1	0.06%	Y	YS20-YS21	118.5	1.28%
YS22-YS23	120	1	118.5	100%	16.0	3.3	12	1	10	1	12	10	Y	N	C	0.1	0.05%	Y	YS21-YS22	118.4	1.33%
YS23-YS24	120	1	118.4	100%	16.0	3.0	12	1	10	1	12	10	Y	N	C	0.1	0.05%	Y	YS22-YS23	118.3	1.38%
YS24-YS25	120	1	118.3	100%	16.0	2.8	12	1	10	1	12	10	Y	N	C	0.1	0.04%	Y	YS23-YS24	118.3	1.42%
YS25-YS26	120	1	118.3	100%	16.0	2.5	12	1	10	1	12	10	Y	N	C	0.0	0.04%	Y	YS24-YS25	118.2	1.46%
YS26-YS27	120	1	118.2	100%	16.0	2.3	12	1	10	1	12	10	Y	N	C	0.0	0.04%	Y	YS25-YS26	118.2	1.50%
YS27-YS28	120	1	118.2	100%	16.0	2.0	12	1	10	1	12	10	Y	N	C	0.0	0.03%	Y	YS26-YS27	118.2	1.53%
YS28-YS29	120	1	118.2	100%	16.0	1.8	12	1	10	1	12	10	Y	N	C	0.0	0.03%	Y	YS27-YS28	118.1	1.56%
YS29-YS30	120	1	118.1	100%	16.0	1.5	12	1	10	1	12	10	Y	N	C	0.0	0.02%	Y	YS28-YS29	118.1	1.58%
YS30-YS31	120	1	118.1	100%	16.0	1.3	12	1	10	1	12	10	Y	N	C	0.0	0.02%	Y	YS29-YS30	118.1	1.60%
YS31-YS32	120	1	118.1	100%	16.0	1.0	12	1	10	1	12	10	Y	N	C	0.0	0.02%	Y	YS30-YS31	118.1	1.62%
YS32-YS33	120	1	118.1	100%	16.0	0.8	12	1	10	1	12	10	Y	N	C	0.0	0.01%	Y	YS31-YS32	118.0	1.63%
YS33-YS34	120	1	118.0	100%	16.0	0.5	12	1	10	1	12	10	Y	N	C	0.0	0.02%	Y	YS32-YS33	118.0	1.65%
YS34-YS35	120	1	118.0	100%	16.0	0.3	12	1	10	1	12	10	Y	N	C	0.0	0.01%	Y	YS33-YS34	118.0	1.66%

LUMINAIRE LOCATION REFERENCE

LUMINAIRE REFERENCE	STATION NUMBER	SIDE OF PATH	LUMINAIRE TYPE
YN01	1+99.18	LEFT	YCA
YS01	2+06.74	RIGHT	YCA
YN02	2+14.29	LEFT	YCA
YS02	2+21.85	RIGHT	YCA
YN03	2+29.40	LEFT	YCA
YS03	2+36.96	RIGHT	YCA
YN04	2+44.51	LEFT	YCA
YS04	2+52.07	RIGHT	YCA
YN05	2+59.62	LEFT	YCA
YS05	2+67.17	RIGHT	YCA
YN06	2+74.73	LEFT	YCA
YS06	2+82.28	RIGHT	YCA
YN07	2+89.84	LEFT	YCA
YS07	2+97.39	RIGHT	YCA
YN08	3+04.95	LEFT	YCA
YS08	3+12.50	RIGHT	YCA
YN09	3+20.05	LEFT	YCA
YS09	3+27.61	RIGHT	YCA
YN10	3+35.16	LEFT	YCA
YS10	3+42.72	RIGHT	YCA
YN11	3+50.27	LEFT	YCA
YS11	3+57.83	RIGHT	YCA
YN12	3+65.38	LEFT	YCA
YS12	3+72.96	RIGHT	YCA
YN13	3+80.55	LEFT	YCA
YS13	3+88.13	RIGHT	YCA
YN14	3+95.71	LEFT	YCA
YS14	4+03.30	RIGHT	YCA
YN15	4+10.88	LEFT	YCA
YS15	4+18.46	RIGHT	YCA
YN16	4+26.05	LEFT	YCA
YS16	4+33.63	RIGHT	YCA
YN17	4+41.21	LEFT	YCA
YS17	4+48.80	RIGHT	YCA
YN18	4+56.38	LEFT	YCA
YS18	4+63.96	RIGHT	YCA
YN19	4+71.55	LEFT	YCA
YS19	4+79.13	RIGHT	YCA
YN20	4+86.71	LEFT	YCA
YS20	4+94.30	RIGHT	YCA
YN21	5+01.88	LEFT	YCA
YS21	5+09.30	RIGHT	YCA
YN22	5+16.73	LEFT	YCA
YS22	5+24.15	RIGHT	YCA
YN23	5+31.58	LEFT	YCA
YS23	5+39.01	RIGHT	YCA
YN24	5+46.44	LEFT	YCA
YS24	5+53.86	RIGHT	YCA
YN25	5+61.29	LEFT	YCA
YS25	5+68.72	RIGHT	YCA
YN26	5+76.14	LEFT	YCA
YS26	5+83.57	RIGHT	YCA
YN27	5+91.00	LEFT	YCA
YS27	5+98.57	RIGHT	YCA
YN28	6+06.14	LEFT	YCA
YS28	6+13.70	RIGHT	YCA
YS29	6+30.03	RIGHT	YCA
YS30	6+46.61	RIGHT	YCA
YS31	6+61.94	RIGHT	YCA
YS32	6+77.27	RIGHT	YCA
YS33	6+92.60	RIGHT	YCA
YS34	7+07.93	RIGHT	YCA
YS35	7+23.26	RIGHT	YCA
YS51	1+82.85	LEFT	YCA
YN51	1+75.26	RIGHT	YCA
YS52	1+67.66	LEFT	YCA
YN52	1+60.07	RIGHT	YCA
YS53	1+52.48	LEFT	YCA
YN53	1+44.89	RIGHT	YCA
YS54	1+37.29	LEFT	YCA
YN54	1+29.70	RIGHT	YCA
YS55	1+22.11	LEFT	YCA
YN55	1+14.52	RIGHT	YCA
YS56	1+06.92	LEFT	YCA
YN56	0+99.33	RIGHT	YCA
YS57	0+91.54	LEFT	YCA
YN57	0+83.75	RIGHT	YCA
YS58	0+75.96	LEFT	YCA
YN58	0+68.17	RIGHT	YCA
YS59	0+60.38	LEFT	YCA
YN59	0+52.59	RIGHT	YCA
YS60	0+44.80	LEFT	YCA
YN60	0+37.01	RIGHT	YCA

LUMINAIRE SCHEDULE

1-Apr-11

TYPE	MOUNT	MANUFACTURER & CATALOG NUMBER	LUMINAIRE DESCRIPTION	ALTERNATE MANUF.	LAMP INFO #	LAMP INFO CODE	INPUT WATTS VOLTS	REF. NOTES
YCA	RECESSED BARRIER WALL	OW COLE #F2159-26-J(BOTTOM)-W-TP-EB-RAL8017	RECESSED IN-WALL COMPACT FLUORESCENT STEP-LIGHT. PROVIDE WITH LOUVERED FACEPLATE, BOTTOM MOUNTED THRU-WIRE JUNCTION BOX, TAMPER-RESISTANT FASTENERS AND UL WET LOCATION LISTING. PROVIDE WITH RAL# 8017 COLOR FINISH. PROVIDE FOUR EXTRA LAMPS AND FOUR EXTRA FACEPLATES WITH CUSTOM COLOR FINISH TO OWNER.	NONE. PROVIDE PRODUCT AS SPECIFIED.	1	28CFQ/830/ G24D3	30W 120V	

KEY NOTES:
1) NOT USED.
GENERAL NOTES:
A) ALL COMPACT FLUORESCENT LAMPS SHALL BE 3000K COLOR TEMPERATURE UNLESS OTHERWISE NOTED.
B) ALL COMPACT FLUORESCENT BALLASTS SHALL BE ELECTRONIC TYPE.
C) NOT USED.

PANEL: P — VOLTAGE: 240 /120V, 1–PH, 3W — BUS SIZE: 125A — MAIN: 100A/2P M.C.B.
LOCATION-PEDESTAL — MOUNTING: RECESSED — FEED: TOP X BOTTOM X
CIRCUIT CODE: blank or N: NON–CONTINUOUS L: LONG–CONTINUOUS R: DEMANDABLE RECEPT'S K: KITCHEN P: PANEL U:UNIT M: MOTOR

	ITEM	CODE	BKR	CKT	A	B	CKT	BKR	CODE	ITEM	
	(E) IRRIGATION CONTROLLER	N	20/1	1	300			15/1	L	BRIDGE LIGHTING	(1)
					510		2				
(1)	BRIDGE LIGHTING	L	15/1	3		720		15/1	L	BRIDGE LIGHTING	(1)
						630	4				
(1)	BRIDGE LIGHTING	L	15/1	5	630			20/1		SPARE	
							6				
	BUSSED SPACE			7				15/1	N	LIGHTING CONTROLS	
						100	8				
	BUSSED SPACE			9			10			BUSSED SPACE	
	BUSSED SPACE			11						BUSSED SPACE	
							12				

CONNECTED VA PER PHASE	1,440	1,450	DEMAND KVA:	3.5	
CONN. VA (CODE K):	400	TOTAL CONN. VA	2,890	DEMAND AMPS:	14.5
CONN. VA (CODE L):	2,490	CONN. VA (CODE K):	0	CONN. AMPS:	12.0
CONN. VA (CODE R):	0	CONN. VA (CODE K):	0	HIGH PH. AMPS/LCL:	14.9

PANEL NOTES:
(1) PROVIDE G.F.C.I. CIRCUIT BREAKER.

IMPORTANT NOTICE
SECTION 4216/4217 OF THE GOVERNMENT CODE REQUIRES A DIG ALERT IDENTIFICATION NUMBER BE ISSUED BEFORE A "PERMIT TO EXCAVATE" WILL BE VALID. FOR YOUR DIG ALERT I.D. NUMBER CALL UNDERGROUND SERVICE ALERT 1–800–227–2600 OR DIAL 811 TWO WORKING DAYS BEFORE YOU DIG.

SPARLING | ILA ZAMMIT
9191 Towne Centre Drive, Suite 220
San Diego, California 92122
858.622.2700 800.667.0610
www.sparling.com
Dale W. Franchak DATE: 4-5-11
PREPARED BY: DALE FRANCHAK P.E. No. 11533
REGISTRATION EXPIRES: 06/30/12

B16435 REGISTERED PROFESSIONAL ENGINEER DALE W. FRANCHAK No. 11533 Exp. 6/30/12 ELECTRICAL STATE OF CALIFORNIA

CITY CONTRACT

E0.2

SPECIFICATION NO. 4885 CITY CONTRACT, CIP NO. S-00941

PLANS FOR THE CONSTRUCTION OF:

TED WILLIAMS PARKWAY PEDESTRIAN OVERCROSSING AT SHOAL CREEK DRIVE

METER PEDESTAL DETAILS AND SCHEDULES

CITY OF SAN DIEGO, CALIFORNIA
ENGINEERING AND CAPITAL PROJECTS DEPARTMENT
SHEET 40 OF 48 SHEETS

W.O. NO. S-00941

A. Palaseyed FOR CITY ENGINEER 4/7/2011 DATE — A. PALASEYED SECTION HEAD

M. KOLL PROJECT MANAGER

DESCRIPTION	BY	APPROVED	DATE	FILMED
ORIGINAL	ILAZ			

RAD 83
292-1743
LAMBERT COORDINATES

CONTRACTOR _____ DATE STARTED _____
INSPECTOR _____ DATE COMPLETED _____

35490-40-D

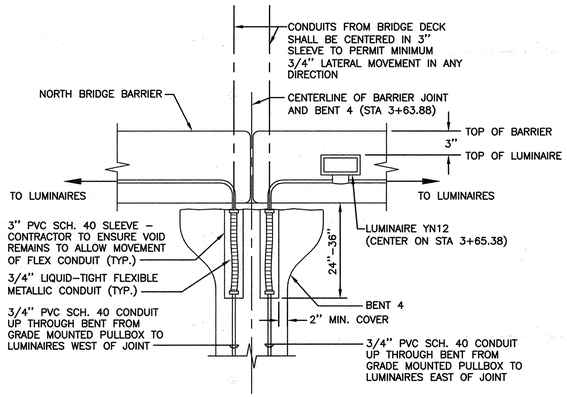

1 / E1.0 BARRIER ELEVATION DETAIL AT BENT 4

N.T.S.

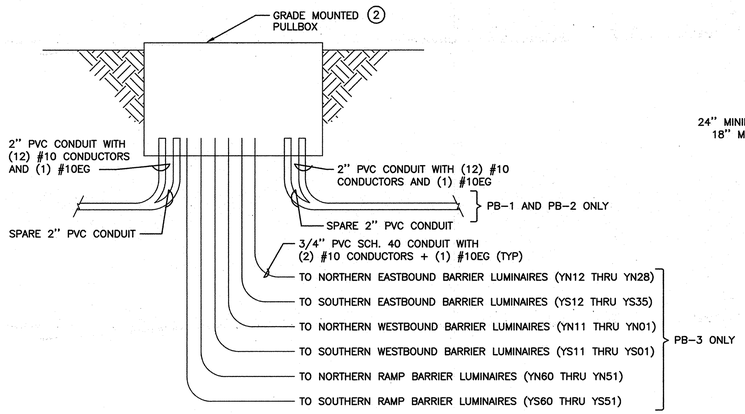

2 / E1.0 PULL BOX DETAIL

N.T.S.

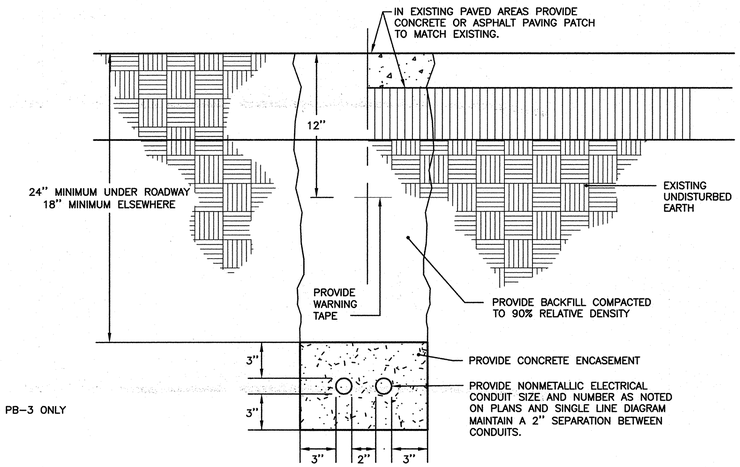

3 / E1.0 TYPICAL TRENCH DETAIL

N.T.S.

SHEET NOTES:

1. PROVIDE CONDUIT EXPANSION FITTING AT EXPANSION JOINT PER 2006 CALTRANS STANDARD PLAN DETAIL Y/ES–9B.
2. PROVIDE NO. 6 PULLBOX AND GROUNDING PER 2006 CALTRANS STANDARD PLAN ES–8. MINIMUM SIZE SHALL BE AS INDICATED.

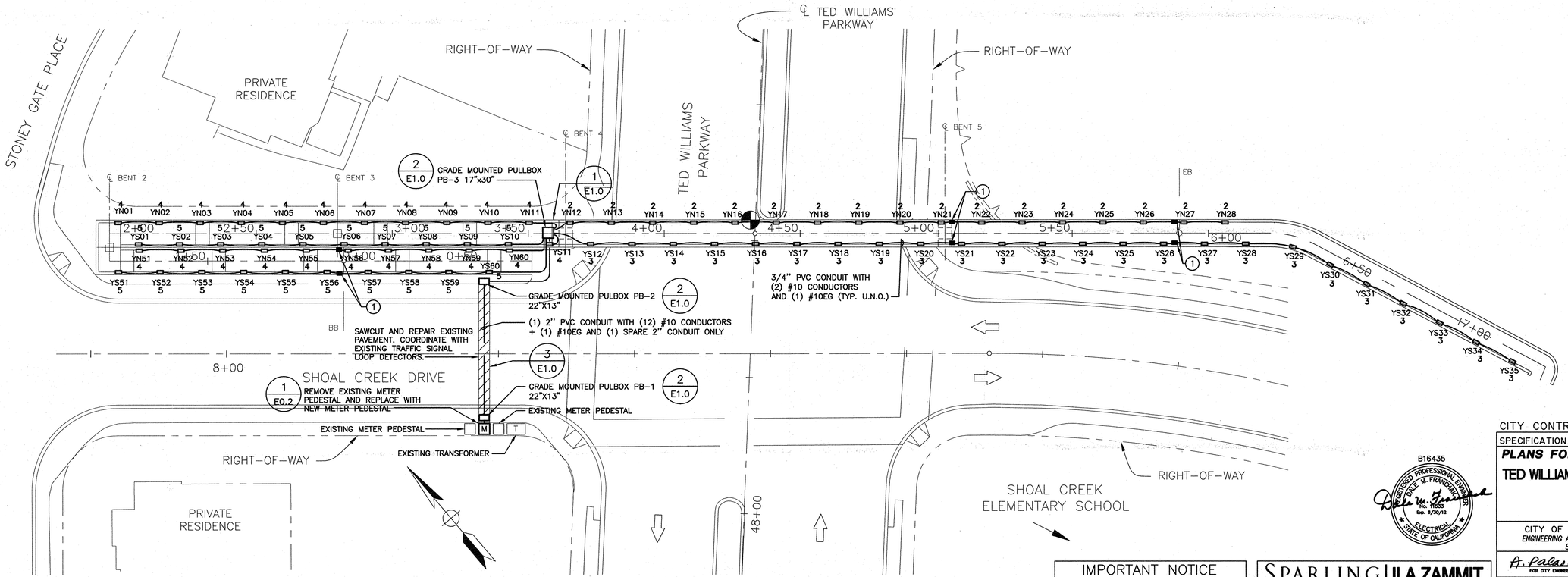

ELECTRICAL SITE PLAN

1" = 20'–0"

NORTH

NOTE: CONTRACTOR SHALL VERIFY ALL CONTROLLING FIELD DIMENSIONS BEFORE ORDERING OR FABRICATING ANY MATERIAL.

IMPORTANT NOTICE

SECTION 4216/4217 OF THE GOVERNMENT CODE REQUIRES A DIG ALERT IDENTIFICATION NUMBER BE ISSUED BEFORE A "PERMIT TO EXCAVATE" WILL BE VALID. FOR YOUR DIG ALERT I.D. NUMBER CALL UNDERGROUND SERVICE ALERT 1–800–227–2600 OR DIAL 811 TWO WORKING DAYS BEFORE YOU DIG.

SPARLING | ILA ZAMMIT
9191 Towne Centre Drive, Suite 220
San Diego, California 92122
858.622.2700 800.667.0610
www.sparling.com

Dale M. Franchak DATE: 4-5-11

PREPARED BY: DALE FRANCHAK P.E. No. 11533
REGISTRATION EXPIRES: 06/30/12

B16435 REGISTERED PROFESSIONAL ENGINEER DALE M. FRANCHAK No. 11533 Exp. 6/30/12 ELECTRICAL STATE OF CALIFORNIA

E1.0

CITY CONTRACT

SPECIFICATION NO. 4885 CITY CONTRACT, CIP NO. S-00941

PLANS FOR THE CONSTRUCTION OF:

TED WILLIAMS PARKWAY PEDESTRIAN OVERCROSSING AT SHOAL CREEK DRIVE

ELECTRICAL SITE PLAN

CITY OF SAN DIEGO, CALIFORNIA
ENGINEERING AND CAPITAL PROJECTS DEPARTMENT
SHEET 41 OF 48 SHEETS

W.O. NO. S-00941

A. Palaseyed FOR CITY ENGINEER 4/7/2011 DATE

A. PALASEYED SECTION HEAD

M. KOLL PROJECT MANAGER

DESCRIPTION	BY	APPROVED	DATE	FILMED
ORIGINAL	ILAZ			

HAD 83
292-1743
LAMBERT COORDINATES

CONTRACTOR ____ DATE STARTED ____
INSPECTOR ____ DATE COMPLETED ____

35490- 41 -D

All designs, ideas, and arrangements as indicated on these drawings are the legal property of Helix Environmental Planning, Inc. and shall be restricted to the original site and specific project for which they were prepared. Reproduction, publication, or re-use by any method, in whole or part. Without the express written consent of Helix Environmental Planning, Inc. and shall constitute prima facia evidence of the acceptance of all these restrictions. There shall be no changes or deviations from these drawings and attached specifications accompanying drawings or specifications of Helix Environmental Planning Inc. and shall be without the written consent of Helix Environmental Planning, Inc. is prohibited.

LEGEND

- Existing Street Tree (to remain)
- Existing Palm Tree (to remain)
- Existing Landscape to be removed
- Existing Landscape (turf) in potential impact area. Protect utilities and replace turf
- Existing Landscape within Construction Easement (area of potential impact): Protect utilities and landscape features and maintain existing plants.
- (5) Existing Tree To Remove (see table)
- (24) Existing Tree To Remain within construction easement (see table)
- Existing Building
- Existing Fence or Wall at Property Line
- Existing Centerline
- Existing Right of Way
- Existing Lane Stripes
- Existing Irrigation head to Remove
- Existing Irrigation head to Remain
- Existing Irrigation Lateral line to Remove
- Existing Irrigation Mainline to remove
- Existing Irrigation Lateral line to Remain
- Existing Irrigation Mainline to Remain
- Existing Irrigation Valve to Remove
- Existing Irrigation Valve to Remain
- Existing Utilities to Remain: Protect in Place

TREES TO BE REMOVED

West of Ted Williams Parkway, North of Shoal Creek Drive

Reference Number	Scientific Name	Common Name	Caliper	
1	*Cinnamomum camphora*	Camphor Tree	recently planted 36" box	
2	*Pinus halepensis*	Allepo Pine	18.5"	
3	*Pinus halepensis*	Allepo Pine	16"	
4	*Pinus halepensis*	Allepo Pine	33"	2 trunks

East of Ted Williams Parkway, North of Shoal Creek Drive

Reference Number	Scientific Name	Common Name	Caliper	
5	*Schinus molle*	Peruvian Pepper	8"	
6	*Schinus molle*	Peruvian Pepper	22"	2 trunks
7	*Schinus molle*	Peruvian Pepper	26"	3 trunks
8	*Jacaranda mimosifolia*	Jacaranda	7"	
9	*Jacaranda mimosifolia*	Jacaranda	6"	
10	*Jacaranda mimosifolia*	Jacaranda	4"	
11	*Schinus molle*	Peruvian Pepper	8"	Leaning toward downhill, with exposed roots
12	*Jacaranda mimosifolia*	Jacaranda	8.5"	
13	*Jacaranda mimosifolia*	Jacaranda	8"	
14	*Jacaranda mimosifolia*	Jacaranda	5"	
15	*Jacaranda mimosifolia*	Jacaranda	8"	
16	*Jacaranda mimosifolia*	Jacaranda	8"	
17	*Lagerstroemia indica*	Crepe Myrtle	6"	multiple trunks, none >3"

TREES WITHIN CONSTRUCTION EASEMENT *

East of Ted Williams Parkway, North of Shoal Creek Drive

Reference Number	Scientific Name	Common Name	Caliper	
18	*Schinus molle*	Peruvian Pepper	12"	
19	*Schinus molle*	Peruvian Pepper	20"	2 trunks
20	*Schinus molle*	Peruvian Pepper	19"	2 trunks
21	*Pinus canariensis*	Canary Island Pine	9"	
22	*Pinus canariensis*	Canary Island Pine	8"	
23	*Lagerstroemia indica*	Crepe Myrtle	6"	multiple trunks, none >3"
24	*Schinus molle*	Peruvian Pepper	26"	5 trunks
25	*Schinus molle*	Peruvian Pepper	23"	5 trunks
26	*Jacaranda mimosifolia*	Jacaranda	5"	

East of Ted Williams Parkway, South of Shoal Creek Drive

27	*Jacaranda mimosifolia*	Jacaranda	9"	
28	*Jacaranda mimosifolia*	Jacaranda	8"	
29	*Jacaranda mimosifolia*	Jacaranda	9"	
30	*Pinus halepensis*	Allepo Pine	12"	
31	*Jacaranda mimosifolia*	Jacaranda	5"	
32	*Schinus molle*	Peruvian Pepper	8"	
33	*Schinus molle*	Peruvian Pepper	29"	3 trunks
34	*Schinus molle*	Peruvian Pepper	14"	
35	*Schinus molle*	Peruvian Pepper	18"	3 trunks
36	*Schinus molle*	Peruvian Pepper	39"	4 trunks
37	*Schinus molle*	Peruvian Pepper	22"	2 trunks
38	*Liquidambar styraciflua*	Sweet Gum	4"	
39	*Liquidambar styraciflua*	Sweet Gum	4"	
40	*Podocarpus macrophyllus*	Podocarpus	10"	

NOTE: CONTRACTOR SHALL VERIFY ALL CONTROLLING FIELD DIMENSIONS BEFORE ORDERING OR FABRICATING ANY MATERIAL.

* Note: Protect trees within the construction easement in place. If *Pinus*, *Lagerstroemia*, *Liquidambar*, *Podocarpus*, or *Jacaranda* is disturbed or removed by construction activities, replace in kind. If *Schinus* is disturbed or removed by construction activities, replace with *Jacaranda mimosifolia*.

Protect Utilities in Place

Limits of Landscape Work

Right of Way

Area of grading impact. Remove trees. Protect in place all existing utilities except irrigation (see note at left)

Existing mainline (approximate): Protect in place and use for new irrigation system. Remove valves and irrigation equipment downstream from valves.

Cap temporarily

Existing controller

Centerline

16"

Area of potential impact within construction easement. Maintain existng plants. Preserve turf, plants, trees, and utilities where possible; replace if impacted

Existing mainline (approximate location)

Construction Easement

Area of potential impact within construction easement. Maintain existing plants. Preserve plants, trees, and utilities where possible; replace if impacted

Existing monument sign: Protect in place

Protect in Place irrigation and utilities

Limits of Landscape Work

Limits of Potential Impact

Cap lateral line (permenant)

Cap lateral line (temporary)

Existing 3" main to system on slopes between Fontanelle Place and Castile Way

Downstream mainline, cap temporarily

Remove lateral line and heads

Remove mainline

Existing meters, BFPs, and valves to remain undisturbed

Remove mainline connection, retain valves for reuse

Area of grading impact. Remove trees and irrigation system.

Area of grading impact. Remove trees and irrigation system. Cap remaining lateral and mainlines as noted.

Upstream mainline, Cap temporarily

Cap lateral line (temporary)

Right of Way

TED WILLIAMS PARKWAY

SHOAL CREEK DRIVE

ASPH

CONC

POOL

Scale: 1"=20'

20 10 0 20

NORTH

IMPORTANT NOTICE

SECTION 4216/4217 OF THE GOVERNMENT CODE REQUIRES A DIG ALERT IDENTIFICATION NUMBER BE ISSUED BEFORE A "PERMIT TO EXCAVATE" WILL BE VALID. FOR YOUR DIG ALERT I.D. NUMBER CALL UNDERGROUND SERVICE ALERT 1-800-227-2600 OR DIAL 811 TWO WORKING DAYS BEFORE YOU DIG.

LICENSED LANDSCAPE ARCHITECT R. BRADLEY LEWIS No. 2857 SIGNATURE 2-28-11 RENEWAL DATE 4/4/11 DATE STATE OF CALIFORNIA

HELIX Environmental Planning

7578 EL CAJON BLVD. SUITE 200 LA MESA, CA 91942
619-462-1515 www.helixepi.com

DRAWN BY: AH | CHECKED BY: RBL | JOB NO: SWE-02

CITY CONTRACT

SPECIFICATION NO. 4885 CITY CONTRACT, CIP NO. S-00941

PLANS FOR THE CONSTRUCTION OF:

TED WILLIAMS PARKWAY PEDESTRIAN OVERCROSSING AT SHOAL CREEK DRIVE

TREE AND IRRIGATION DEMOLITION PLAN

CITY OF SAN DIEGO, CALIFORNIA
ENGINEERING AND CAPITAL PROJECTS DEPARTMENT
SHEET 42 OF 46 SHEETS

W.O. NO. S-00941

A. Palaseyed 4/7/2011
FOR CITY ENGINEER DATE

A. PALASEYED
SECTION HEAD

M. KOLL
PROJECT MANAGER

NAD 83
292-1743
LAMBERT COORDINATES

35490-42-D

DESCRIPTION	BY	APPROVED	DATE	FILMED
ORIGINAL	HELIX			

CONTRACTOR _____ DATE STARTED _____
INSPECTOR _____ DATE COMPLETED _____

All designs, ideas, and arrangements as indicated on these drawings are the legal property of Helix Environmental Planning Inc. and shall be restricted to the origional site and specific project for which they were prepared. Reproduction, publication, or re-use by any method, in whole or part. Without the express written consent of Helix Environmental Planning, Inc. is prohibited. There shall be no changes or deviations from these drawings or of the accompanying specifications without the written consent of Helix Environmental Planning, Inc. Visual contact with these drawings and attached specifications shall constitute prima facia evidence of the acceptance of all these restrictions.

irrigation system pressure requirements

worst case operation/friction loss calculation

PROJECT NAME:	Ted Williams Parkway Pedestrian Overcrossing at Shoal Creek Drive					
PROJECT NUMBER:	SWE-02					
VALVE NO	B-8					
LATERAL PIPE						
SECTION (Sch. 40)	PIPE SIZE	SECTION LENGTH	SECTION GPM FLOW	SECTION MULT. FACTOR	PRESSURE FRICTION LOSS	
1.	3/4"	45	2.70	0.0083	0.37	
2.	1"	25	5.00	0.0066	0.17	
TOTAL LATERAL LINE LOSS						0.54
MAINLINE PIPE						
SECTION (CL.315)	PIPE SIZE	SECTION LENGTH	SECTION GPM FLOW	SECTION MULT. FACTOR	PRESSURE FRICTION LOSS	
1.	3"	725	60	0.0041	2.97	
TOTAL MAINLINE LOSS			(assumed)			2.97
	3.51					
TOTAL IRRIGATION LINE LOSS						
SYSTEM PRESSURE LOSS CALCULATION						
METER SIZE	2"					
STATIC PRESSURE AT POC	111.00	(Assumed 111 p.s.i. @ Poppy Hills Drive)				
Elevation @ METER	750.0					
Elevation @ Valve	685.0					
ELEVATION GAIN / LOSS	-65.0					
Pressure Difference POC to Valve	29.2					
STATIC PRESSURE AT VALVE	**140.2**					
Elevation @ LAST HEAD	700.0					
ELEVATION GAIN / LOSS	15.0					
WATER METER LOSS	3.00	(assumed)				
BACKFLOW PREVENTER LOSS	12.00	(assumed)				
MASTER VALVE LOSS	2.70	(assumed)				
MAIN LINE LOSS	2.97	(assumed)				
REMOTE CONTROL VALVE LOSS	2.70					
LATERAL LINE LOSS	0.54					
FRICTION LOSS SUBTOTAL =	**23.91**					
FITTING LOSSES 10%	0.35					
ELEVATION PSI GAIN / LOSS	-5.50	(Valve to head)				
MINIMUM OPERATIONAL PSI	50.00					
FRICTION LOSS SUBTOTAL	23.91					
SYSTEM OPERATIONAL TOTAL=	**79.76**					
STATIC PSI	140.17					
SYSTEM OPERATIONAL REQ.	79.76					
RESIDUAL PSI =	**60.40**					

NOTE: CONTRACTOR SHALL VERIFY ALL CONTROLLING FIELD DIMENSIONS BEFORE ORDERING OR FABRICATING ANY MATERIAL.

IRRIGATION LEGEND / SPRINKLER SCHEDULE

*ALL EQUIPMENT SHALL BE "OR APPROVED EQUAL"

SYMBOL	MANUFACTURER*	MODEL #	DESCRIPTION	GPM	RAD.	ARC	DETAIL/SHEET
Ⓐ	HUNTER	PGJ-06-V-0.75	ADJUSTABLE-ARC ROTOR HEAD WITH 16-FOOT NOZZLE WITH 6-INCH POP-UP AND FACTORY-INSTALLED DRAIN CHECK VALVE	0.75	16'	VAR.	D/44
Ⓓ	HUNTER	PGJ-06-V-2.0	ADJUSTABLE-ARC ROTOR HEAD WITH 25-FOOT NOZZLE WITH 6-INCH POP-UP AND FACTORY-INSTALLED DRAIN CHECK VALVE	2.0	25'	VAR.	D/44
②	HUNTER	PGH-ADJ-02	ADJUSTABLE-ARC ROTOR HEAD WITH 30-FOOT NOZZLE WITH 12-INCH POP-UP	0.9	30'	VAR.	D/44
◒	RAINBIRD TORO	1806 0-T-12-H	TORO PRECISION SPRAY HEAD, MALE THREAD WITH 12-FOOT RADIUS, ON RAINBIRD 6-INCH POP-UP RISER	0.79	12'	180°	E/44
⊘ ⊘	RAINBIRD TORO	1806 0-T-8-H or TQ	TORO PRECISION SPRAY HEAD, MALE THREAD WITH 8-FOOT RADIUS, ON RAINBIRD 6-INCH POP-UP RISER	0.34 0.54	8'	180° 270°	E/44
⊘ ⊘	RAINBIRD TORO	1806 0-T-5-H or Q	TORO PRECISION SPRAY HEAD, MALE THREAD WITH 5-FOOT RADIUS, ON RAINBIRD 6-INCH POP-UP RISER	0.06 0.13	5'	90° 180°	E/44
▪	RAINBIRD TORO	1806 0-T-4X30-SST	TORO PRECISION SIDE-STRIP SPRAY HEAD, MALE THREAD ON RAINBIRD 6-INCH POP-UP RISER	0.67	4'x30'	NA	E/44
▪	RAINBIRD TORO	1806 0-T-4X15-RST	TORO PRECISION RIGHT CORNER SPRAY HEAD, MALE THREAD ON RAINBIRD 6-INCH POP-UP RISER	0.33	4'x15'	NA	E/44
▪	RAINBIRD TORO	1806 0-T-4X15-LST	TORO PRECISION LEFT CORNER SPRAY HEAD, MALE THREAD ON RAINBIRD 6-INCH POP-UP RISER	0.33	4'x15'	NA	E/44
◎	TORO RAINBIRD	53692 BUBBLER RWS-G	FULLY ADJUSTABLE BUBBLER NOZZLE WITH REMOVABLE FILTER SCREEN ON 4 INCH RISER IN RAINBIRD ROOT WATERING SYSTEM WITH TOP GRATE	0.5	NA	NA	F/44
P.O.C.			SYSTEM TO BE CONSTRUCTED AS EXTENSION OF EXISTING SYSTEM. CONTRACTOR SHALL COORDINATE WITH PACIFIC PROPERTIES SERVICE: 858-549-7611 FOR EXACT LOCATIONS OF EXISTING SYSTEM COMPONENTS				NA
⊗	RAINBIRD	100-PEB 150-PEB	1-INCH OR 1½-INCH PEB SERIES VALVE, SIZE PER PLAN.				A/44
⧓	KING BROS.	BTU SERIES	LINE SIZE TRUE UNION BALL VALVE WITH SLIP ENDS				B/44
Ⓒ	RAINBIRD VIT STRONGBOX	ESP-SMT4 ESP-SM3 (x2) SB-1852SS QP-18	18-INCH WIDE, 52-INCH HIGH ENCLOSURE. INSTALL ON MOUNTING PAD SOUTH SIDE: NEW CONTROLLER OUTDOOR SMART MODULAR CONTROL SYSTEM WITH WEATHER SENSOR AND TWO (2) THREE-STATION EXPANSION MODUALS (10 STATIONS, TOTAL). INSTALL IN 18-INCH WIDE, 52-INCH HIGH ENCLOSURE ON MOUNTING PAD. COORDINATE MASTER VALVE WINDOWS, TIMING, AND STATIONS WITH PACIFIC PROPERTIES. NORTH SIDE: USE EXISTING CONTROLLER AND CONTRACTOR TO COORDINATE STATIONS AND WATERING TIMES WITH PACIFIC PROPERTIES SERVICE: 858-549-3137				I-J/44 K/44
Ⓠ	RAINBIRD	44 LRC	1-INCH QUICK-COUPLING VALVE WITH LOCKING RUBBER COVER				C/44
- - - -	LASCO	CLASS 315 PVC	3-INCH PVC PRESSURE MAINLINE. RE-ROUTE EXISTING SYSTEM. INSTALL MINIMUM 18 INCHES BELOW GRADE.				A/44
———	LASCO	SCHEDULE 40 PVC	3/4" OR LARGER PVC LATERAL LINE. INSTALL ON 12-INCHES BELOW GRADE, SEE DETAIL. ALL PVC LATERAL LINES ARE 3/4" UNLESS NOTED OTHERWISE.				D/44
//	LASCO	PVC	PVC SLEEVE, SIZED 2x SIZE OF PIPE. SEE NOTE 13.				G/44

STATIC PRESSURE AT METER ON POPPY HILLS DRIVE ASSUMED TO BE REGULATED AT 111 P.S.I.,
HUNTER ROTOR HEAD DESIGN WORKING PRESSURE 50 P.S.I.
TORO SPRAY DESIGN WORKING PRESSURE 20-50 P.S.I.

1 — Valve Number
1" 12 — Gallons Per Minute (G.P.M.) / Valve Size

NORTH

20 10 0 20
SCALE: 1"=20'

IRRIGATION LEGEND: EXISITING EQUIPMENT

○	EXISTING IRRIGATION HEAD
⧖ ⊗	EXISTING VALVE TO PRESERVE IN PLACE OR REUSE PER PLAN
—— ——	EXISTING LATERAL LINE TO PRESERVE
—— ——	EXISTING MAINLINE TO PRESERVE
[M]	EXISITING METER. PRESERVE IN PLACE.
[BF]	EXISTING BACKFLOW PREVENTOR. PRESERVE IN PLACE
[C]	EXISTING CONTROLLER. PRESERVE IN PLACE. COORDINATE USE OF STATIONS WITH PACIFIC PROPERTIES SERIVCE 858-549-7611 (PER LEGEND)

IRRIGATION NOTES

1. PLANS ARE DIAGRAMMATIC AND APPROXIMATE. ALL VALVES AND OTHER IRRIGATION EQUIPMENT SHALL BE LOCATED IN PLANTING AREAS.
2. CONTRACTOR SHALL REVIEW IRRIGATION SPECIFICATIONS PRIOR TO BEGINNING WORK. REFER TO STANDARD SPECIFICATIONS AND SPECIAL PROVISIONS AND CONSTRUCTION DETAILS FOR INSTALLATION PROCEDURES.
3. CONTRACTOR SHALL BE RESPONSIBLE FOR COORDINATING HIS/HER WORK WITH OTHER TRADES AND WITH MAINTENANCE COMPANY: PACIFIC PROPERTIES SERVICE AT 858-549-7611
4. CONTRACTOR SHALL CHECK AND VERIFY ALL EXISTING SITE CONDITIONS, UTILITIES, AND SERVICES PRIOR TO TRENCHING, AND SHALL NOTIFY THE ENGINEER/LANDSCAPE ARCHITECT OF ANY DISCREPANCIES IMMEDIATELY.
5. CONTRACTOR SHALL VERIFY STATIC WATER PRESSURE, MAINLINE, VALVE, CONTROLLER, EXISTING EQUIPMENT, ETC. PRIOR TO BEGINNING WORK, AND SHALL NOTIFY ENGINEER/LANDSCAPE ARCHITECT OF ANY DISCREPANCIES.
6. CONTRACTOR SHALL BE RESPONSIBLE FOR OBTAINING PLUMBING PERMIT AND ALL NECESSARY PERMITS PRIOR TO COMMENCING INSTALLATION.
7. CONTRACTOR SHALL INSTALL SYSTEMS THAT ARE COMPLETE AND FUNCTIONING PROPERLY IN EVERY WAY.
8. ALL WORK SHALL BE INSTALLED IN ACCORDANCE WITH THE REQUIREMENTS OF THE GOVERNING AGENCIES.
9. CONTRACTOR SHALL BE FAMILIAR WITH EXISTING CONDITIONS PRIOR TO BIDDING PROJECT.
10. POINTS OF CONNECTION AS SHOWN ON PLANS ARE APPROXIMATE-CONTRACTOR SHALL VERIFY EXISTING CONDITIONS AND CONNECTIONS.
11. INSTALL ONLY ONE REMOTE CONTROL VALVE PER VALVE BOX. GROUP TOGETHER, PARALLEL TO EACH OTHER, AND OUTSIDE OF HEAD SPRAY WHERE EVER POSSIBLE. BOXES SHALL BE SET 1 INCH ABOVE FINISH GRADE.
12. CONTRACTOR SHALL BE RESPONSIBLE FOR SLEEVES AND CHASES UNDER PAVING, THROUGH WALLS, ETC., UNLESS OTHERWISE NOTED.
13. ALL PIPING UNDER EXISTING OR FUTURE SIDEWALKS SHALL BE INSTALLED IN SCHEDULE 40 PVC SLEEVES 2x PIPE DIAMETER. SLEEVE SHALL EXTEND MINIMUM 12-INCHES OUTSIDE EDGE OF PAVING. NO TEES, ELLS, OR OTHER TURNS IN PIPING SHALL BE LOCATED UNDER PAVING UNLESS PLANS NOTE OTHERWISE.
14. CONTRACTOR SHALL ADJUST ALL IRRIGATION HEADS TO FULLY COVER ALL PLANTING AREAS WITH THE LEAST AMOUNT OF OVERSPRAY ONTO PAVEMENT AS POSSIBLE.
15. FLUSH ALL PIPE CLEAN PRIOR TO INSTALLING IRRIGATION HEADS.
16. ALL SPRAY IRRIGATION MUST BE FULLY INSTALLED AND OPERATIONAL PRIOR TO INSTALLATION OF PLANT MATERIAL.

IMPORTANT NOTICE

SECTION 4216/4217 OF THE GOVERNMENT CODE REQUIRES A DIG ALERT IDENTIFICATION NUMBER BE ISSUED BEFORE A "PERMIT TO EXCAVATE" WILL BE VALID. FOR YOUR DIG ALERT I.D. NUMBER CALL UNDERGROUND SERVICE ALERT 1-800-227-2600 OR DIAL 811 TWO WORKING DAYS BEFORE YOU DIG.

LICENSED LANDSCAPE ARCHITECT — R. BRADLEY LEWIS No. 2657 — SIGNATURE 2-28-13 RENEWAL DATE — 4/4/11 DATE — STATE OF CALIFORNIA

HELIX
Environmental Planning
7578 EL CAJON BLVD. SUITE 200 LA MESA, CA 91942
619-462-1515 www.helixepi.com

DRAWN BY: AH | CHECKED BY: RBL | JOB NO: SWE-02

CITY CONTRACT

SPECIFICATION NO. 4885 CITY CONTRACT, CIP NO. S-00941

PLANS FOR THE CONSTRUCTION OF:

TED WILLIAMS PARKWAY PEDESTRIAN OVERCROSSING AT SHOAL CREEK DRIVE
IRRIGATION PLAN, LEGEND, AND NOTES

CITY OF SAN DIEGO, CALIFORNIA
ENGINEERING AND CAPITAL PROJECTS DEPARTMENT
SHEET 43 OF 46 SHEETS

W.O. NO. S-00941

A. Palaseyed (FOR CITY ENGINEER) 4/7/2011 (DATE)

A. PALASEYED — SECTION HEAD
M. KOLL — PROJECT MANAGER

DESCRIPTION	BY	APPROVED	DATE	FILMED
ORIGINAL	HELIX			

NAD 83
292-1743
LAMBERT COORDINATES

CONTRACTOR ______ DATE STARTED ______
INSPECTOR ______ DATE COMPLETED ______

35490-43-D

All designs, ideas, and arrangements as indicated on these drawings are the legal property of Helix Environmental Planning, Inc. and shall be restricted to the original site and specific project for which they were prepared and attached. Visual contact with these drawings shall constitute evidence of the acceptance of these restrictions. Reproduction, publication, or re-use by any method, in whole or part, without the express written consent of Helix Environmental Planning, Inc. is prohibited. There shall be no changes or deviations from these drawings and specifications without the written consent of Helix Environmental Planning, Inc. and shall be restricted to the original site.

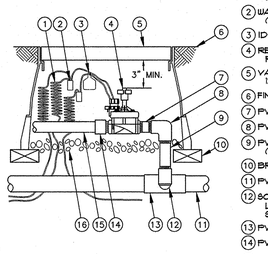

LEGEND:

1. 30-INCH LINEAR LENGTH OF WIRE, COILED
2. WATER PROOF CONNECTION (1 OF 2)
3. ID TAG
4. REMOTE CONTROL VALVE: RAIN BIRD PEB
5. VALVE BOX WITH COVER: 12-INCH SIZE
6. FINISH GRADE/TOP OF MULCH
7. PVC SCH 80 NIPPLE (CLOSE)
8. PVC SCH 40 ELL
9. PVC SCH 80 NIPPLE (LENGTH AS REQUIRED)
10. BRICK (1 OF 4)
11. PVC MAINLINE PIPE
12. SCH 80 NIPPLE (2-INCH LENGTH, HIDDEN) AND SCH 40 ELL
13. PVC SCH 40 TEE OR ELL
14. PVC SCH 40 MALE ADAPTER
15. PVC LATERAL PIPE
16. 30-INCH MINIMUM DEPTH OF 3/4-INCH WASHED GRAVEL

NOTE:

A. ALL THREADED PIPE CONNECTIONS WILL BE SEALED WITH OVERLAPPING WRAPS OF TEFLON TAPE AS REQUIRED TO PREVENT LEAKAGE.

A REMOTE CONTROL VALVE

NO SCALE

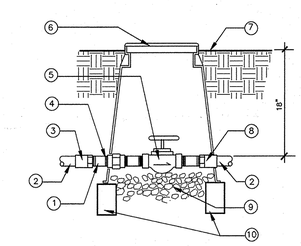

LEGEND

1. THREADED PVC SCH 80 NIPPLES (NO CLOSE NIPPLES, TYP.)
2. PRESSURIZED PVC MAINLINE
3. PVC FEMALE SXT ADAPTER
4. PVC SCH 80 UNION
5. VALVE AS SPECIFIED ON PLANS POSITION VALVE IN BOX SO THAT HANDLE IS FREE TO OPERATE.
6. 10 INCH ROUND PLASTIC VALVE BOX (PER SPECIFICATIONS) INSTALL 1 INCH ABOVE FINISHED GRADE
7. FINISHED GRADE
8. PVC FEMALE ADAPTER
9. PEA GRAVEL 1/2" DIAMETER (APPROX. 1 CU. FT.)
10. BRICK SUPPORT FOR VALVE BOX

B BALL VALVE

NO SCALE

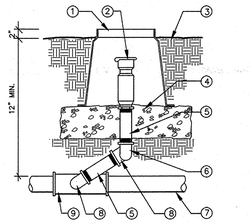

LEGEND:

1. 10 INCH ROUND PLASTIC VALVE BOX WITH LOCKING COVER AND "QC." HEAT BRANDED INTO TOP. INSTALL 1 INCH ABOVE FINISHED GRADE
2. QUICK COUPLER VALVE WITH ACME THREADS PER PLANS
3. FINISH GRADE. ALLOW 2 INCH DEPTH FOR TOP MULCH
4. ONE CUBIC FOOT PEA GRAVEL
5. SCH.80 P.V.C. NIPPLE
6. P.V.C. ELL (TXT)
7. MAINLINE PER LEGEND
8. MARLEX STREET ELLS (2) REQUIRED PER QUICK COUPLER
9. SCH.40 P.V.C. TEE (SXSXT)

NOTES:

A. ALL P.V.C. FITTINGS SHALL BE SCH. 40 EXCEPT WHERE NOTED.

B. ALL SCH.80 P.V.C. THREADS SHALL BE WRAPPED WITH TEFLON TAPE.

C QUICK COUPLER

NO SCALE

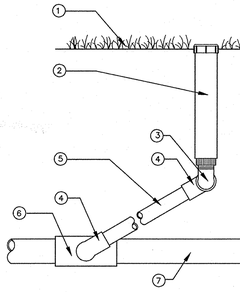

LEGEND:

1. FINISH GRADE
2. HUNTER ROTOR HEAD WITH 6- OR 12 INCH POP-UP PER PLANS
3. 1/2 INCH STREET ELL
4. POLY ELL
5. POLY PIPE (LENGTH AS REQUIRED)
6. PVC TEE
7. PVC LATERAL LINE

D ROTOR OR SPRAY IRRIGATION HEAD

NO SCALE

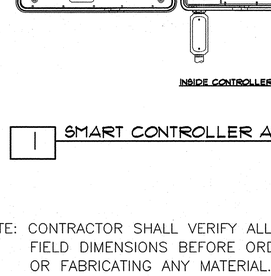

LEGEND:

1. FINISHED GRADE
2. TORO PRECISION SPRAY NOZZLE PER PLAN
3. APPROVED BACKFILL
4. RAINBIRD 1806 SPRINKLER BODY PER PLAN
5. MANUFACTURED SWING JOINT
6. SCHEDULE 40 LATERAL PIPE
7. PVC SCH 40 TEE OR ELL

NOTES:

A. INSTALL SPRINKLER AT FINISHED GRADE

B. INSTALLATION TO BE COMPLETED IN ACCORDANCE WITH MANUFACTURERS SPECIFICATIONS.

E 6 INCH POP-UP SPRAY SPRINKLER

NO SCALE

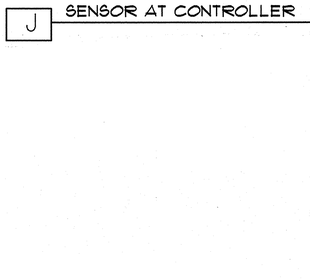

LEGEND:

1. 4-INCH-DIAMETER GRATE
2. HUNTER PRESSURE COMPENSATING BUBBLER, PER LEGEND
3. RAIN BIRD RWS-BG07 ROOT WATERING SYSTEM (INCLUDES GRATE, SWING ASSEMBLY, 1/2" MALE NPT INLET, AND BASKET CANISTER WITH GRATE)
4. FINISH GRADE WITH MULCH LAYER
5. PEA GRAVEL
6. 1/2-INCH PVC SCH 80 NIPPLE
7. 1/2-INCH 90-DEGREE ELBOW
8. 12-INCH SWING ASSEMBLY
9. 1/2-INCH MALE NPT INLET
10. PVC SCH 40 TEE OR EL
11. LATERAL PIPE
12. 4-INCH BASKET WEAVE CANISTER

F ROOT WATERING SYSTEM WITH BUBBLER IRRIGATION HEAD

NO SCALE

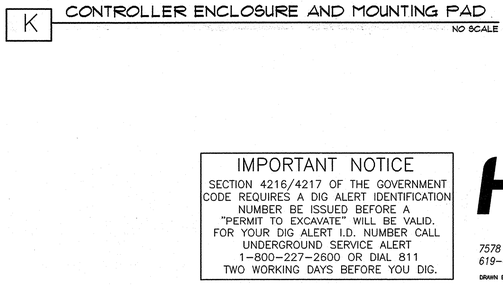

LEGEND:

1. FINISHED GRADE
2. NATIVE SOIL FREE OF ROCK AND DEBRIS
3. RED PLASTIC TRENCH MARKER TAPE FOR CONTROL WIRE
4. 3" WIDE BLUE METALLIC TRENCH MARKER OVER MAINLINE
5. PVC PIPE PER IRRIGATION LEGEND
6. SLEEVE FOR MAINLINE IN STREET, 2x SIZE OF PIPE
7. CONTROL WIRES
8. SAND, AS APPROVED BY AGENCY

NOTES:

A. BACKFILL MATERIAL SHALL BE COMPACTED.

B. ALL PVC PIPE SHALL LAY FREE IN THE TRENCH WITH NO INDUCED STRAIN AND WITH SUFFICIENT ALLOWANCE FOR EXPANSION AND CONTRACTION AS RECOMMENDED BY THE MANUFACTURER.

C. ALL PVC PIPE UNDER PAVEMENT SHALL BE INSTALLED IN A SCHEDULE 40 SLEEVE TWICE THE DIAMETER OF THE PIPE.

D. TEFLON TAPE ¾" WIDE SHALL BE USED ON ALL THREADED CONNECTIONS WITH 50% OVERLAP.

G PIPE TRENCH AND SLEEVING

NO SCALE

LEGEND:

1. PVC PRESSURIZED MAINLINE
2. CONCRETE THRUST BLOCK (1 CUBIC FOOT MINIMUM)

H CONCRETE THRUST BLOCKS

NO SCALE

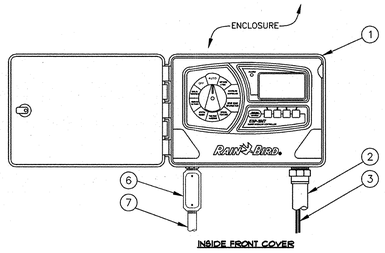

LEGEND:

1. RAIN BIRD ESP-SMT4 OUTSIDE WALL MOUNT
2. 1-INCH PVC SCH 40 CONDUIT AND FITTINGS
3. WIRES TO REMOTE CONTROL VALVES AND SENSOR
4. OPTIONAL MODULES FOR 12-STATION CONTROLLER
5. CONNECTION FOR WIRES FROM SENSOR
6. JUNCTION BOX
7. 1/2-INCH PVC SCH 40 CONDUIT TO POWER SUPPLY

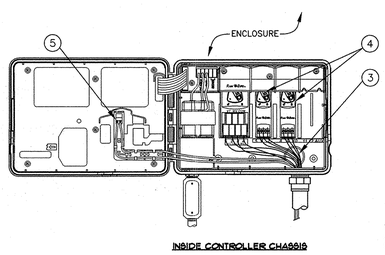

NOTE:
WIRE LENGTH FROM CONTROLLER TO SENSOR NOT TO EXCEED 2000 FEET.

I SMART CONTROLLER AND SENSOR

NO SCALE

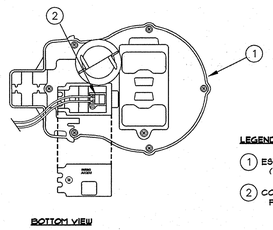

LEGEND:

1. ESP-SMT SENSOR (BOTTOM VIEW)
2. CONNECTION FOR WIRES FROM CONTROLLER

BOTTOM VIEW

J SENSOR AT CONTROLLER

NO SCALE

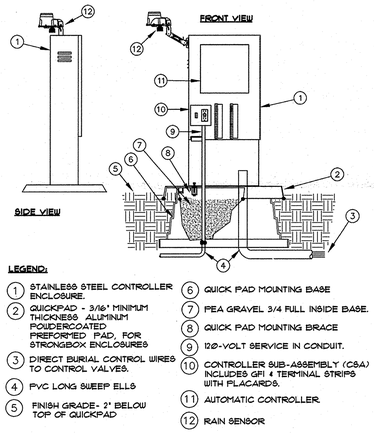

LEGEND:

1. STAINLESS STEEL CONTROLLER ENCLOSURE.
2. QUICKPAD - 3/16" MINIMUM THICKNESS ALUMINUM POLYDERCOATED PREFORMED PAD, FOR STRONGBOX ENCLOSURES
3. DIRECT BURIAL CONTROL WIRES TO CONTROL VALVES.
4. PVC LONG SWEEP ELLS
5. FINISH GRADE- 2" BELOW TOP OF QUICKPAD
6. QUICK PAD MOUNTING BASE
7. PEA GRAVEL 3/4 FULL INSIDE BASE.
8. QUICK PAD MOUNTING BRACE
9. 120-VOLT SERVICE IN CONDUIT.
10. CONTROLLER SUB-ASSEMBLY (CSA) INCLUDES GFI 4 TERMINAL STRIPS WITH PLACARDS.
11. AUTOMATIC CONTROLLER.
12. RAIN SENSOR

K CONTROLLER ENCLOSURE AND MOUNTING PAD

NO SCALE

NOTE: CONTRACTOR SHALL VERIFY ALL CONTROLLING FIELD DIMENSIONS BEFORE ORDERING OR FABRICATING ANY MATERIAL.

LICENSED LANDSCAPE ARCHITECT — R. BARTLEY LEWIS No. 2867 — SIGNATURE 2-28-12 — RENEWAL DATE 4/4/11 — DATE — STATE OF CALIFORNIA

IMPORTANT NOTICE

SECTION 4216/4217 OF THE GOVERNMENT CODE REQUIRES A DIG ALERT IDENTIFICATION NUMBER BE ISSUED BEFORE A "PERMIT TO EXCAVATE" WILL BE VALID. FOR YOUR DIG ALERT I.D. NUMBER CALL UNDERGROUND SERVICE ALERT 1-800-227-2600 OR DIAL 811 TWO WORKING DAYS BEFORE YOU DIG.

HELIX
Environmental Planning
7578 EL CAJON BLVD. SUITE 200 LA MESA, CA 91942
619-462-1515
www.helixepi.com
DRAWN BY: AH | CHECKED BY: RBL | JOB NO: SWE-02

CITY CONTRACT

SPECIFICATION NO. 4885 CITY CONTRACT, CIP NO. S-00941

PLANS FOR THE CONSTRUCTION OF:

TED WILLIAMS PARKWAY PEDESTRIAN OVERCROSSING AT SHOAL CREEK DRIVE
IRRIGATION DETAILS

CITY OF SAN DIEGO, CALIFORNIA
ENGINEERING AND CAPITAL PROJECTS DEPARTMENT
SHEET 44 OF 46 SHEETS

W.O. NO. S-00941

A. Palaseyed 4/7/2011
FOR CITY ENGINEER — DATE

A. PALASEYED, SECTION HEAD

M. KOLL, PROJECT MANAGER

DESCRIPTION	BY	APPROVED	DATE	FILMED
ORIGINAL	HELIX			

NAD 83
292-1743
LAMBERT COORDINATES

CONTRACTOR _____ DATE STARTED _____
INSPECTOR _____ DATE COMPLETED _____

35490-44-D

All designs, ideas, and arrangements as indicated on these drawings are the legal property of Helix Environmental Planning, Inc. and shall be restricted to the specific project for which they were prepared. Reproduction, publication, or re-use by any method, in whole or part. Without the express written consent of Helix Environmental Planning, Inc. is prohibited. There shall be no changes or deviations from these drawings and attached specifications shall constitute prima facia evidence of the acceptance of all these restrictions.

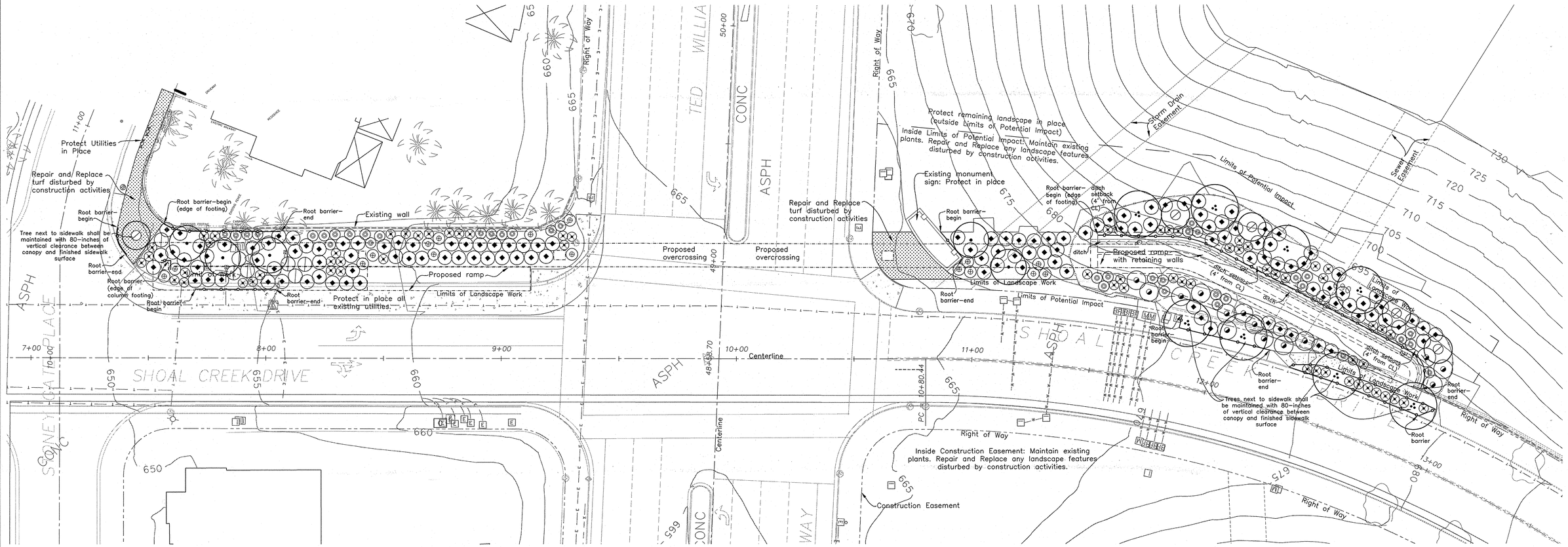

TED WILLIAMS PARKWAY PEDESTRIAN OVERCROSSING AT SHOAL CREEK DRIVE PLANT PALETTE

Symbol	Scientific Name	Common Name	Form/ Function	Height	Width/ Spacing	Container Size	Count
Trees							
•	*Arbutus unedo*	Strawberry Tree	Standard Form/ Small Accent Tree	15-30'	15-30'	15 gallon	5
⁘	*Jacaranda mimosifolia*	Jacaranda	Standard Form/ Street and Slope Tree	25-40'	15-30'	24" Box	11
⊘	*Lagerstroemia indica*	Crape Myrtle	Standard Form/ Small Accent Tree	25'	25'	15 gallon	5

TED WILLIAMS PARKWAY PEDESTRIAN OVERCROSSING AT SHOAL CREEK DRIVE PLANT PALETTE

Symbol	Scientific Name	Common Name	Form/ Function	Height	Width/ Spacing	Container Size	Count
Shrubs							
⊗	*Cistus ladanifer 'Blanca'*	White Rockrose	Shrub/ White Flowers	3-5'	3-5'	1 gallon	65
⊕	*Leptospermum scoparium 'Ruby Glow'*	New Zealand Tea Tree	Accent Shrub/ Pink Flowers	6-8'	4-5'	1 gallon	16
◐	*Phormium tenax 'Bronze'*	Bronze New Zealand Flax	Accent Leafy Shrub/ Bronze Foliage	6-8'	6-8'	1 gallon	10
◎	*Salvia leucantha*	Mexican Bush Sage	Shrub/ Purple Flowers	3-4'	3-6'	1 gallon	7
Ground Covers							
◆	*Ceanothus gloriosus 'Anchor Bay'*	Anchor Bay California Lilac	Ground Cover/ Purple Flowers	2'	6'	1 gallon	129
◒	*Rosmarinus officinalis 'Prostratus'*	Prostrate Rosemary	Ground Cover/ Small Purple Flowers	2'	4-8'	1 gallon	14
Turf							
	Fescue Turf Blend - Marathon	Turf	Lawn to Replace Existing	--	--	Sod	up to 10175 square feet

TED WILLIAMS PARKWAY PEDESTRIAN OVERCROSSING AT SHOAL CREEK DRIVE MATERIALS LEGEND (ALL PER GREENBOOK AND WHITEBOOK STANDARDS)

Symbol	Description	Quantity or Rate	Detail / Sheet Number
N/A	Fertilizer pellets/tablets	1 Tablet per 1-gal, 5 Tablets per 15-gal.	A, B / 46
	Root Barrier	451 lin. ft.	C / 46
All planting areas	Amended soil	10868.14 sq. ft.: 6 inches deep	--

PLANTING NOTES

MULCH

MULCH ALL PLANTING AREAS (EXCEPT TURF AREAS) TO A MINIMUM DEPTH OF 2 INCHES.

MULCH SHALL BE KEPT OFF BASE OF PLANTS. SEE PLANTING DETAILS, SHEET 46.

MULCH SHALL BE TYPE 1 GROUND WOOD PRODUCT.

SPACING

PLANT SPACING IS PER PLAN, UNLESS OTHERWISE NOTED IN LEGEND. PLANTS SHALL NOT CONFLICT WITH DRAIN INLETS.

MAINTENANCE PERIOD

PLANTS SHALL BE MAINTAINED FOR THE 90 DAY MAINTENANCE PERIOD AS SPECIFIED IN THE CONTRACT DOCUMENTS.

NOTE: CONTRACTOR SHALL VERIFY ALL CONTROLLING FIELD DIMENSIONS BEFORE ORDERING OR FABRICATING ANY MATERIAL.

NORTH

20 10 0 20
SCALE: 1"=20'

LICENSED LANDSCAPE ARCHITECT
R. BRADLEY LEWIS No. 2637
SIGNATURE
2-28-11
REGISTRATION DATE
4/7/11
DATE
STATE OF CALIFORNIA

IMPORTANT NOTICE

SECTION 4216/4217 OF THE GOVERNMENT CODE REQUIRES A DIG ALERT IDENTIFICATION NUMBER BE ISSUED BEFORE A "PERMIT TO EXCAVATE" WILL BE VALID. FOR YOUR DIG ALERT I.D. NUMBER CALL UNDERGROUND SERVICE ALERT 1-800-227-2600 OR DIAL 811 TWO WORKING DAYS BEFORE YOU DIG.

HELIX Environmental Planning
7578 EL CAJON BLVD. SUITE 200 LA MESA, CA 91942
619-462-1515 www.helixepi.com

DRAWN BY: AH | CHECKED BY: RBL | JOB NO: SWE-02

CITY CONTRACT

SPECIFICATION NO. 4885 CITY CONTRACT, CIP NO. S-00941

PLANS FOR THE CONSTRUCTION OF:

TED WILLIAMS PARKWAY PEDESTRIAN OVERCROSSING AT SHOAL CREEK DRIVE
PLANTING PLAN, LEGEND, AND NOTES

CITY OF SAN DIEGO, CALIFORNIA
ENGINEERING AND CAPITAL PROJECTS DEPARTMENT
SHEET 45 OF 46 SHEETS

W.O. NO. S-00941

A. Palaseyed FOR CITY ENGINEER — 4/7/2011 DATE

A. PALASEYED SECTION HEAD

M. KOLL PROJECT MANAGER

DESCRIPTION	BY	APPROVED	DATE	FILMED
ORIGINAL	HELIX			

NAD 83
292-1743
LAMBERT COORDINATES

CONTRACTOR _____ DATE STARTED _____
INSPECTOR _____ DATE COMPLETED _____

35490-45-D

All designs, ideas, and arrangements as indicated on these drawings are the legal property of Helix Environmental Planning, Inc. and shall be restricted to the original site of Helix Environmental Planning, Inc. is prohibited. There shall be no changes or deviations from these drawings and specifications without the written consent of Helix Environmental Planning, Inc. and shall constitute prima facia evidence of the acceptance of all these restrictions. Reproduction, publication, or re-use by any method, in whole or part. Without the express written consent of Helix Environmental Planning, Inc. Visual contact with these drawings and attached specifications for which they were prepared.

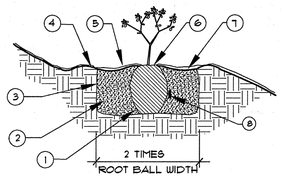

DETAIL LEGEND

1. SOIL BALL RESTING ON FIRM SOIL TO AVOID SETTLING.
2. BACKFILL WITH NATIVE SOIL.
3. ROUGHEN SIDES AND BOTTOM OF PIT.
4. FINISHED GRADE.
5. (2) INCH MULCH LAYER DO NOT PLACE AGAINST CROWN OF PLANT
6. ROOTBALL SLIGHTLY HIGHER THAN FINISHED GRADE.
7. WATER BASIN.
8. FERTILIZER TABLET. INSTALL ONE WITH EACH 1 GALLON CONTAINER PLANT, INSTALL FIVE WITH EACH 15 GALLON CONTAINER PLANT.

A SHRUB PLANTING

NOT TO SCALE

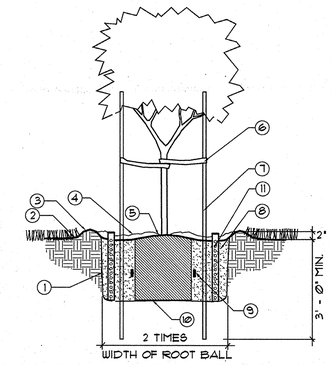

DETAIL LEGEND

1. ROUGHEN SIDES AND BOTTOM OF PIT
2. FINISHED GRADE
3. (2) INCH MULCH LAYER DO NOT PLACE AGAINST CROWN OF PLANT
4. WATER BASIN
5. ROOTBALL SLIGHTLY HIGHER THAN FINISHED GRADE (DO NOT TRIM ROOTS)
6. 'CINCH-TIE' MANUFACTURED BY V.I.T. COMPANY, INC. ATTACH PER MANUFACTURER'S SPECIFICATIONS AND SECURE WITH FURRING NAIL AT STAKE
7. (2) 2-INCH DIAMETER X 10 FOOT LONG LODGEPOLE STAKES. USE TWO STAKES FOR TREES 15-GALLONS AND LARGER
8. PLANTING BACKFILL SHALL BE NATIVE SOIL.
9. FERTILIZER TABLET. INSTALL ONE WITH EACH 1 GALLON CONTAINER PLANT, INSTALL FIVE WITH EACH 15 GALLON CONTAINER PLANT.
10. ROOTBALL RESTING ON FIRM SOIL TO AVOID SETTLING
11. 4-INCH DIA., MIN. 36-INCH LONG PERFORATED RIGID PVC PIPE WITH FILTER SOCK AND GRATE (TYP.), IN TWO PLACES. DO NOT FILL PIPE WITH GRAVEL.

NOTE:

A. TREE STAKES SHALL BE INSPECTED AND ADJUSTED DURING PLANT ESTABLISHMENT PERIOD TO INSURE THAT THEY ARE ADEQUATELY SURROUNDING THE TREE WITHOUT GIRDLING TRUNKS OR BRANCHES

B TREE PLANTING

NOT TO SCALE

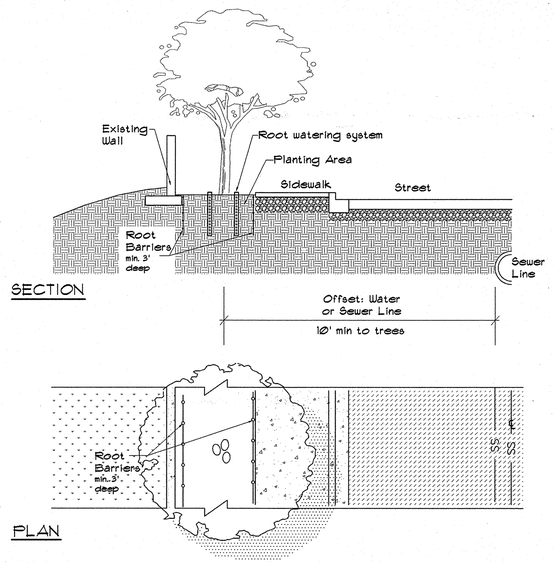

C ROOT BARRIERS AND UTILITY OFFSETS

NOT TO SCALE

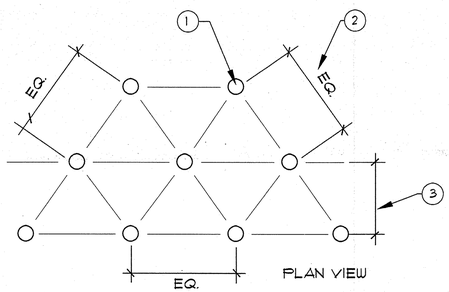

DETAIL LEGEND

1. PLANT MATERIAL
2. TRIANGULAR SPACING PER PLANTING PLANS AND LEGENDS
3. PLANT ROW

D GROUND COVER PLANTING: TRIANGULAR SPACING

NOT TO SCALE

NOTE: CONTRACTOR SHALL VERIFY ALL CONTROLLING FIELD DIMENSIONS BEFORE ORDERING OR FABRICATING ANY MATERIAL.

IMPORTANT NOTICE

SECTION 4216/4217 OF THE GOVERNMENT CODE REQUIRES A DIG ALERT IDENTIFICATION NUMBER BE ISSUED BEFORE A "PERMIT TO EXCAVATE" WILL BE VALID. FOR YOUR DIG ALERT I.D. NUMBER CALL UNDERGROUND SERVICE ALERT 1-800-227-2600 OR DIAL 811 TWO WORKING DAYS BEFORE YOU DIG.

LICENSED LANDSCAPE ARCHITECT
R. BRADLEY LEWIS No. 2857
SIGNATURE
2-28-13
RENEWAL DATE
4/4/11
DATE
STATE OF CALIFORNIA

HELIX
Environmental Planning
7578 EL CAJON BLVD. SUITE 200 LA MESA, CA 91942
619-462-1515 www.helixepi.com
DRAWN BY: AH | CHECKED BY: RBL | JOB NO: SWE-02

CITY CONTRACT

SPECIFICATION NO. 4885 CITY CONTRACT, CIP NO. S-00941

PLANS FOR THE CONSTRUCTION OF:

TED WILLIAMS PARKWAY PEDESTRIAN OVERCROSSING AT SHOAL CREEK DRIVE PLANTING DETAILS

CITY OF SAN DIEGO, CALIFORNIA
ENGINEERING AND CAPITAL PROJECTS DEPARTMENT
SHEET 46 OF 46 SHEETS

W.O. NO. S-00941

A. PALASEYED 4/7/2011
FOR CITY ENGINEER DATE

A. PALASEYED
SECTION HEAD

DESCRIPTION	BY	APPROVED	DATE	FILMED
ORIGINAL	HELIX			

M. KOLL
PROJECT MANAGER

NAD 83
292-1743
LAMBERT COORDINATES

CONTRACTOR _____ DATE STARTED _____
INSPECTOR _____ DATE COMPLETED _____

35490-46-D

LOCATION 1:
CONSTRUCT FOOTING FOR PEDESTRIAN BRIDGE ON NORTH SIDE

LEGEND:

- PORTABLE SIGN
- CONE
- FLASHING ARROW BOARD
- WORK ZONE
- END CONSTRUCTION — G20-2
- TS — TRAFFIC SIGNAL
- SIDEWALK CLOSED — R9-9
- LANE CLOSED — C30 (CA) / C30 (BIKE)
- W4-2 (RT)
- ROAD WORK AHEAD — W20-1
- BIKE LANE CLOSED — C30 (BIKE)
- RIGHT LANE CLOSED AHEAD — W20-5 (RT)
- BIKE LANE CLOSED AHEAD — W20-5 (BIKE)
- SIDEWALK CLOSED CROSS HERE — R9-11A (RT)
- SIDEWALK CLOSED AHEAD CROSS HERE — R9-11 (RT)
- SIDEWALK CLOSED AHEAD CROSS HERE — R9-11 (LT)
- SIDEWALK CLOSED CROSS HERE — R9-11A (LT)

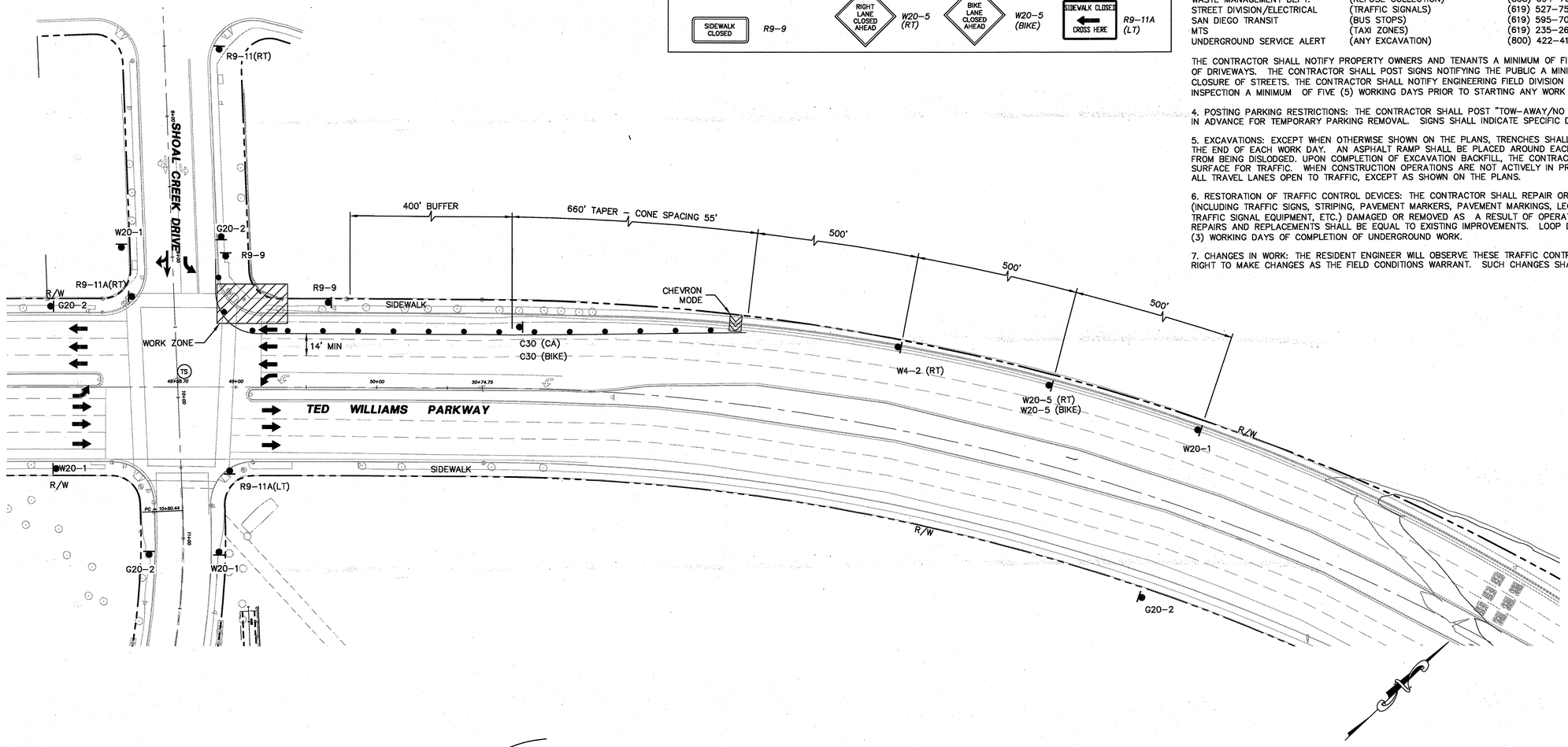

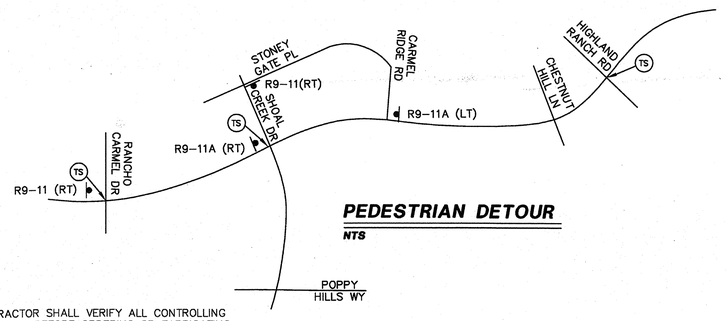

PEDESTRIAN DETOUR
NTS

NOTE: CONTRACTOR SHALL VERIFY ALL CONTROLLING FIELD DIMENSIONS BEFORE ORDERING OR FABRICATING ANY MATERIAL.

CONTRACTOR SHALL BE RESPONSIBLE FOR PROTECTING WORK ZONE WITH WITH 6' HIGH CHAIN LINK FENCE AROUND ALL CONSTRUCTION AND STAGING AREAS.

GRAPHIC SCALE
40' 0 20' 40' 80'

CITY OF SAN DIEGO
TRAFFIC ENGINEER — DATE
FOR CITY ENGINEER

IMPORTANT NOTICE
SECTION 4216/4217 OF THE GOVERNMENT CODE REQUIRES A DIG ALERT IDENTIFICATION NUMBER BE ISSUED BEFORE A "PERMIT TO EXCAVATE" WILL BE VALID. FOR YOUR DIG ALERT I.D. NUMBER CALL UNDERGROUND SERVICE ALERT 1-800-227-2600 OR DIAL 811 TWO WORKING DAYS BEFORE YOU DIG.

REGISTERED PROFESSIONAL ENGINEER — JON M. COLLINS — No. 62090 Exp. 09/30/11 — CIVIL — STATE OF CALIFORNIA

Kimley-Horn and Associates, Inc.
401 B Street · Suite 600 · San Diego, Ca. · 92101
Tel: (619) 234-9411 · Fax: (619) 234-9433
PREPARED BY: JON M. COLLINS R.C.E. 62090 DATE: 4/1/11
REGISTRATION EXPIRES: 09/30/11

TRAFFIC CONTROL NOTES

STREETS WITH ADT OF 5,000 AND OVER

1. VALIDATION: THE TRAFFIC CONTROL PLAN IS NOT VALID UNTIL WORK DATES AND WORK HOURS ARE APPROVED. THE CONTRACTOR SHALL, PER SECTION 7-10.1.3 OF THE CONTRACT SPECIAL PROVISIONS, CALL THE ENGINEERING TRAFFIC CONTROL SECTION AT (858) 495-4741 TO OBTAIN A PERMIT. THE CONTRACTOR MUST CALL A MINIMUM OF TWO (2) WORKING DAYS PRIOR TO STARTING WORK, OR FIVE (5) WORKING DAYS WHEN THE WORK WILL AFFECT A TRAFFIC SIGNAL.

2. STANDARDS: THIS TRAFFIC CONTROL PLAN SHALL CONFORM TO THE MOST RECENT ADOPTED EDITION OF EACH OF THE FOLLOWING MANUALS:
a. CITY OF SAN DIEGO STANDARD DRAWINGS, APPENDIX "A";
b. CALIFORNIA MANUAL OF UNIFORM TRAFFIC CONTROL DEVICES FOR STREETS AND HIGHWAYS; AND
c. STANDARD SPECIFICATIONS FOR PUBLIC WORKS CONSTRUCTION ("GREENBOOK"), INCLUDING REGIONAL AND CITY OF SAN DIEGO SUPPLEMENT AMENDMENTS.

3. NOTIFICATIONS: THE CONTRACTOR SHALL NOTIFY THE FOLLOWING AFFECTED AGENCIES A MINIMUM OF FIVE (5) WORKING DAYS PRIOR TO ANY EXCAVATION, CONSTRUCTION, OR TRAFFIC CONTROL:

FIRE DEPARTMENT DISPATCH	(STREET OR ALLEY CLOSURE)	(858) 573-1300
POLICE DEPARTMENT TRAFFIC	(STREET OR ALLEY CLOSURE)	(858) 495-7800
WASTE MANAGEMENT DEPT.	(REFUSE COLLECTION)	(858) 694-7000
STREET DIVISION/ELECTRICAL	(TRAFFIC SIGNALS)	(619) 527-7500
SAN DIEGO TRANSIT	(BUS STOPS)	(619) 595-7038
MTS	(TAXI ZONES)	(619) 235-2643
UNDERGROUND SERVICE ALERT	(ANY EXCAVATION)	(800) 422-4133

THE CONTRACTOR SHALL NOTIFY PROPERTY OWNERS AND TENANTS A MINIMUM OF FIVE (5) WORKING DAYS PRIOR TO CLOSURE OF DRIVEWAYS. THE CONTRACTOR SHALL POST SIGNS NOTIFYING THE PUBLIC A MINIMUM OF FIVE (5) WORKING DAYS PRIOR TO CLOSURE OF STREETS. THE CONTRACTOR SHALL NOTIFY ENGINEERING FIELD DIVISION AT (858) 627-3200 AND ARRANGE FOR INSPECTION A MINIMUM OF FIVE (5) WORKING DAYS PRIOR TO STARTING ANY WORK INVOLVING NIGHTTIME OR WEEKEND HOURS.

4. POSTING PARKING RESTRICTIONS: THE CONTRACTOR SHALL POST "TOW-AWAY/NO PARKING SIGNS" TWENTY-FOUR (24) HOURS IN ADVANCE FOR TEMPORARY PARKING REMOVAL. SIGNS SHALL INDICATE SPECIFIC DAYS, DATES AND TIMES OF RESTRICTIONS.

5. EXCAVATIONS: EXCEPT WHEN OTHERWISE SHOWN ON THE PLANS, TRENCHES SHALL BE BACKFILLED OR TRENCH-PLATED AT THE END OF EACH WORK DAY. AN ASPHALT RAMP SHALL BE PLACED AROUND EACH TRENCH PLATE TO PREVENT THE PLATE FROM BEING DISLODGED. UPON COMPLETION OF EXCAVATION BACKFILL, THE CONTRACTOR SHALL PROVIDE A SATISFACTORY SURFACE FOR TRAFFIC. WHEN CONSTRUCTION OPERATIONS ARE NOT ACTIVELY IN PROGRESS, THE CONTRACTOR SHALL MAINTAIN ALL TRAVEL LANES OPEN TO TRAFFIC, EXCEPT AS SHOWN ON THE PLANS.

6. RESTORATION OF TRAFFIC CONTROL DEVICES: THE CONTRACTOR SHALL REPAIR OR REPLACE TRAFFIC CONTROL DEVICES (INCLUDING TRAFFIC SIGNS, STRIPING, PAVEMENT MARKERS, PAVEMENT MARKINGS, LEGENDS, CURB MARKINGS, LOOP DETECTORS, TRAFFIC SIGNAL EQUIPMENT, ETC.) DAMAGED OR REMOVED AS A RESULT OF OPERATIONS AND NOT DESIGNATED FOR REMOVAL. REPAIRS AND REPLACEMENTS SHALL BE EQUAL TO EXISTING IMPROVEMENTS. LOOP DETECTORS SHALL BE REPLACED WITHIN THREE (3) WORKING DAYS OF COMPLETION OF UNDERGROUND WORK.

7. CHANGES IN WORK: THE RESIDENT ENGINEER WILL OBSERVE THESE TRAFFIC CONTROL PLANS IN OPERATION AND RESERVES THE RIGHT TO MAKE CHANGES AS THE FIELD CONDITIONS WARRANT. SUCH CHANGES SHALL SUPERSEDE THESE PLANS.

CITY CONTRACT
SPECIFICATION NO. 4885 CITY CONTRACT, CIP NO. S-00941

PLANS FOR THE CONSTRUCTION OF:

TED WILLIAMS PARKWAY PEDESTRIAN OVERCROSSING AT SHOAL CREEK DRIVE

TRAFFIC CONTROL PLAN - LOCATION 1

CITY OF SAN DIEGO, CALIFORNIA
ENGINEERING AND CAPITAL PROJECTS DEPARTMENT
SHEET T1 OF 3 SHEETS

W.O. NO. S-00941

A. PALASEYED 4/7/2011
FOR CITY ENGINEER — DATE

A. PALASEYED — SECTION HEAD

M. KOLL — PROJECT MANAGER

DESCRIPTION	BY	APPROVED	DATE	FILMED
ORIGINAL	SWE			

NAD 83
292-1743
LAMBERT COORDINATES

CONTRACTOR _____ DATE STARTED _____
INSPECTOR _____ DATE COMPLETED _____

35490-T1-D

Mar 31, 2011 - 12:21pm K:\SND_TP\TO\09527901\3\Design\sheets\279013-07.dwg tammie.moreno

Development Services, City of San Diego 8/29/2005 11:42 AM BDR-IMP.dwg

LEGEND:

PORTABLE SIGN ● CONE

FLASHING ARROW BOARD

WORK ZONE

END CONSTRUCTION — G20-2

TS TRAFFIC SIGNAL

SIDEWALK CLOSED — R9-9

LANE CLOSED — C30 (CA)

W4-2 (RT)

ROAD WORK AHEAD — W20-1

BIKE LANE CLOSED — C30 (BIKE)

RIGHT LANE CLOSED AHEAD — W20-5 (RT)

BIKE LANE CLOSED AHEAD — W20-5 (BIKE)

SIDEWALK CLOSED CROSS HERE — R9-11A (RT)

SIDEWALK CLOSED AHEAD CROSS HERE — R9-11A (RT)

SIDEWALK CLOSED AHEAD CROSS HERE — R9-11 (LT)

SIDEWALK CLOSED CROSS HERE — R9-11A (LT)

LOCATION 2:

CONSTRUCT FOOTING FOR PEDESTRIAN BRIDGE ON SOUTH SIDE

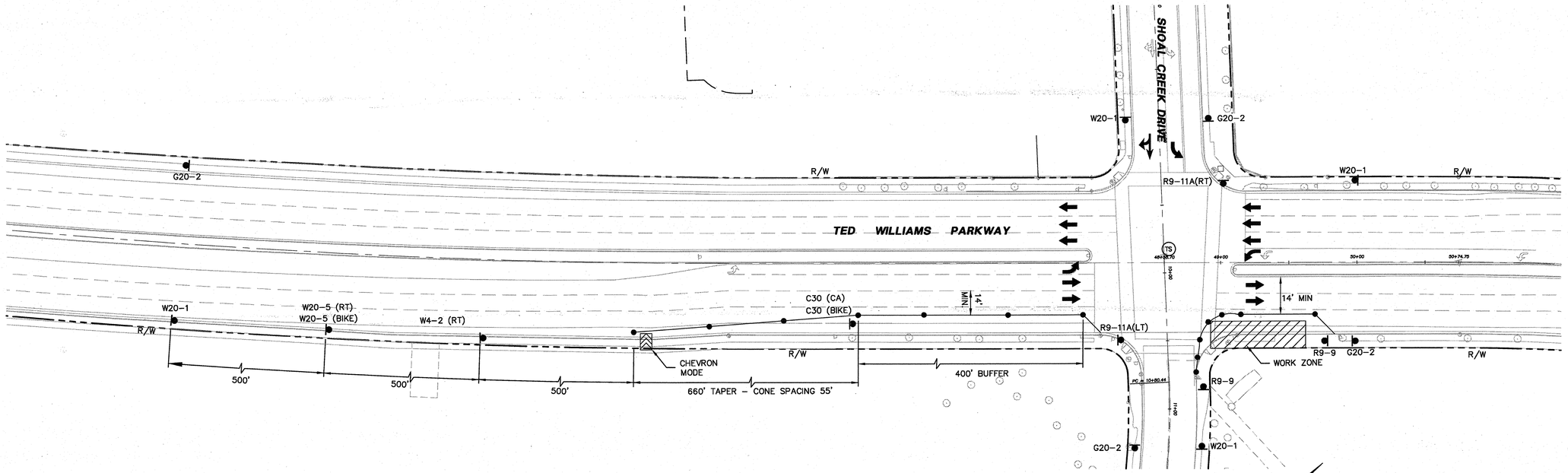

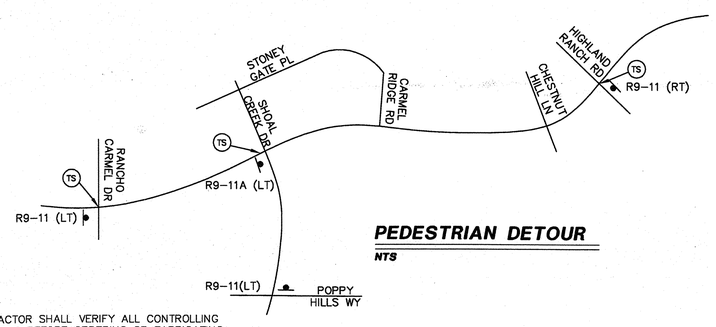

PEDESTRIAN DETOUR

NTS

NOTE: CONTRACTOR SHALL VERIFY ALL CONTROLLING FIELD DIMENSIONS BEFORE ORDERING OR FABRICATING ANY MATERIAL.

CONTRACTOR SHALL BE RESPONSIBLE FOR PROTECTING WORK ZONE WITH WITH 6' HIGH CHAIN LINK FENCE AROUND ALL CONSTRUCTION AND STAGING AREAS.

GRAPHIC SCALE

40' 0 20' 40' 80'

CITY OF SAN DIEGO

TRAFFIC ENGINEER FOR CITY ENGINEER — DATE

IMPORTANT NOTICE

SECTION 4216/4217 OF THE GOVERNMENT CODE REQUIRES A DIG ALERT IDENTIFICATION NUMBER BE ISSUED BEFORE A "PERMIT TO EXCAVATE" WILL BE VALID. FOR YOUR DIG ALERT I.D. NUMBER CALL UNDERGROUND SERVICE ALERT 1-800-227-2600 OR DIAL 811 TWO WORKING DAYS BEFORE YOU DIG.

Kimley-Horn and Associates, Inc.

401 B Street · Suite 600 · San Diego, Ca. · 92101
Tel: (619) 234-9411 Fax: (619) 234-9433

PREPARED BY: JON M. COLLINS DATE: 4/1/11
REGISTRATION EXPIRES: 09/30/11 R.C.E. 62090

REGISTERED PROFESSIONAL ENGINEER — JON M. COLLINS — No. 62090 Exp. 09/30/11 — CIVIL — STATE OF CALIFORNIA

CITY CONTRACT

SPECIFICATION NO. 4885 CITY CONTRACT, CIP NO. S-00941

PLANS FOR THE CONSTRUCTION OF:

TED WILLIAMS PARKWAY PEDESTRIAN OVERCROSSING AT SHOAL CREEK DRIVE

TRAFFIC CONTROL PLAN - LOCATION 2

CITY OF SAN DIEGO, CALIFORNIA
ENGINEERING AND CAPITAL PROJECTS DEPARTMENT
SHEET T2 OF 3 SHEETS

W.O. NO. S-00941

A. Palaseyed FOR CITY ENGINEER — 4/7/2011 DATE

A. PALASEYED — SECTION HEAD

DESCRIPTION	BY	APPROVED	DATE	FILMED
ORIGINAL	SWE			

M. KOLL — PROJECT MANAGER

NAD 83

292-1743 — LAMBERT COORDINATES

CONTRACTOR _____ DATE STARTED _____
INSPECTOR _____ DATE COMPLETED _____

35490-T2-D

Mar 31, 2011 - 12:21pm K:\SND_TPTO\095279013\Design\sheets\279013-08.dwg tammie.moreno

Development Services, City of San Diego 8/29/2005 11:42 AM BDR-IMP.dwg

LOCATION 3:

RESTRIPE SHOAL CREEK DRIVE PRIOR TO INSTALLING NEW CURB. INSTALL NEW CURB.

CONTRACTOR SHALL BE RESPONSIBLE FOR PROTECTING WORK ZONE WITH WITH 6' HIGH CHAIN LINK FENCE AROUND ALL CONSTRUCTION AND STAGING AREAS.

LEGEND:

- PORTABLE SIGN
- CONE
- WORK ZONE
- END CONSTRUCTION — G20-2
- FLASHING ARROW BOARD
- ROAD NARROWS — W5-1
- NARROW LANE — C12 (CA)
- LANE CLOSED — C30 (CA)
- W4-2 (LT)
- ROAD WORK AHEAD — W20-1
- SHOULDER WORK AHEAD — C24(CA)
- LEFT LANE CLOSED AHEAD — W20-5 (LT)
- SHOULDER CLOSED — C30A(CA)
- SIDEWALK CLOSED — R9-9

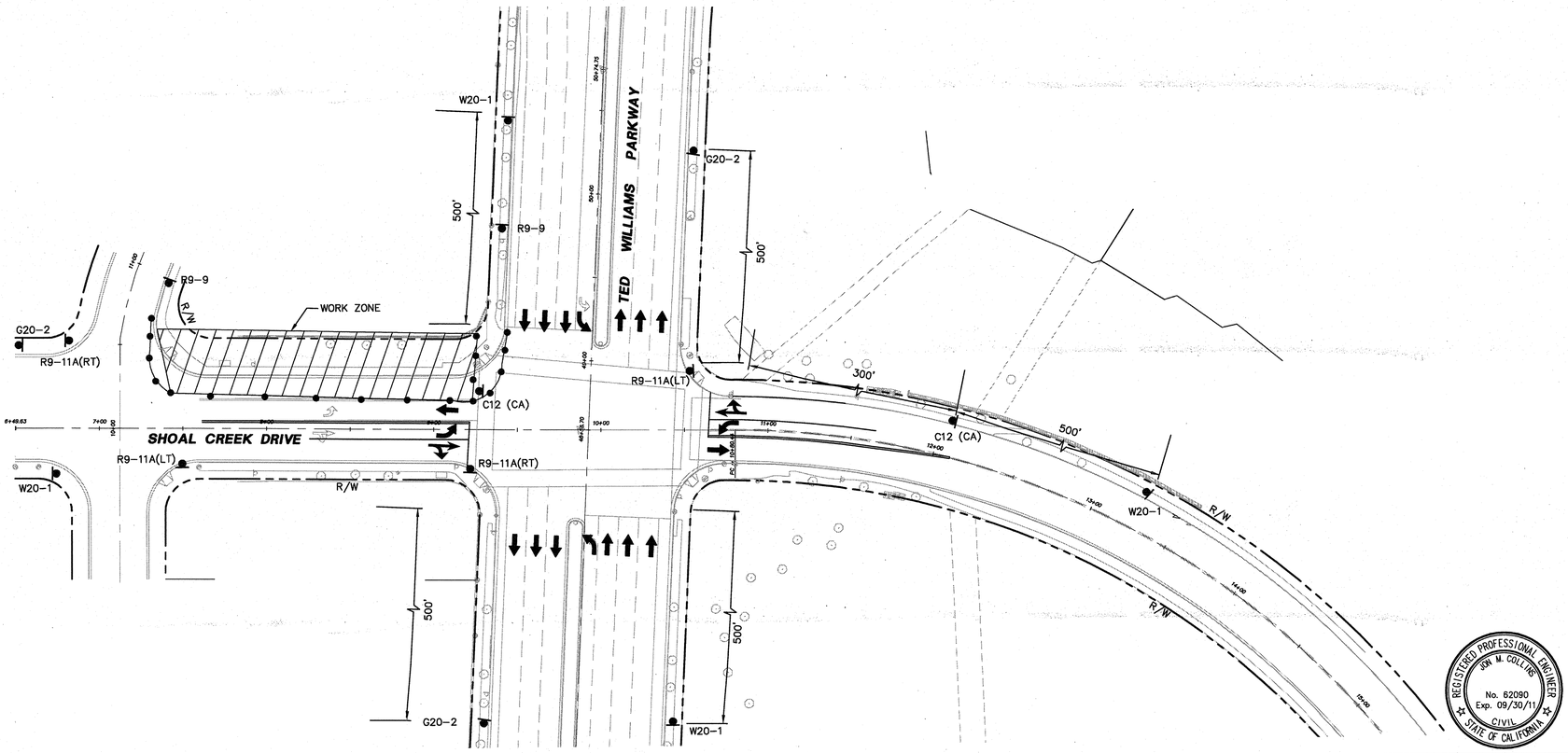

GRAPHIC SCALE

40' 0 20' 40' 80'

NOTE: CONTRACTOR SHALL VERIFY ALL CONTROLLING FIELD DIMENSIONS BEFORE ORDERING OR FABRICATING ANY MATERIAL.

CITY OF SAN DIEGO

TRAFFIC ENGINEER FOR CITY ENGINEER — DATE

IMPORTANT NOTICE

SECTION 4216/4217 OF THE GOVERNMENT CODE REQUIRES A DIG ALERT IDENTIFICATION NUMBER BE ISSUED BEFORE A "PERMIT TO EXCAVATE" WILL BE VALID. FOR YOUR DIG ALERT I.D. NUMBER CALL UNDERGROUND SERVICE ALERT 1-800-227-2600 OR DIAL 811 TWO WORKING DAYS BEFORE YOU DIG.

Kimley-Horn and Associates, Inc.

401 B Street · Suite 600 · San Diego, Ca. · 92101
Tel: (619) 234-9411 · Fax: (619) 234-9433

DATE: 4/11/11

PREPARED BY: JON M. COLLINS R.C.E. 62090
REGISTRATION EXPIRES: 09/30/11

REGISTERED PROFESSIONAL ENGINEER — JON M. COLLINS — No. 62090 Exp. 09/30/11 — CIVIL — STATE OF CALIFORNIA

CITY CONTRACT

SPECIFICATION NO. 4885 CITY CONTRACT, CIP NO. S-00941

PLANS FOR THE CONSTRUCTION OF:

TED WILLIAMS PARKWAY PEDESTRIAN OVERCROSSING AT SHOAL CREEK DRIVE

TRAFFIC CONTROL PLAN - SHOAL CREEK DR

CITY OF SAN DIEGO, CALIFORNIA
ENGINEERING AND CAPITAL PROJECTS DEPARTMENT
SHEET T3 OF 3 SHEETS

W.O. NO. S-00941

A. Palaseyed 4/7/2011
FOR CITY ENGINEER DATE

A. PALASEYED — SECTION HEAD

M. KOLL — PROJECT MANAGER

DESCRIPTION	BY	APPROVED	DATE	FILMED
ORIGINAL	SWE			

NAD 83
292-1743
LAMBERT COORDINATES

CONTRACTOR _____ DATE STARTED _____
INSPECTOR _____ DATE COMPLETED _____

35490-T3-D

Mar 31, 2011 - 12:21pm K:\SND_PTO\09527901\3\Design\sheets\279013-09.dwg tammie.moreno

evelopment Services, City of San Diego 8/29/2005 11:42 AM BDR-IMP.dwg