THE CITY OF SAN DIEGO

HOW TO OBTAIN A PERMIT FOR

Residential Decks

CITY OF SAN DIEGO DEVELOPMENT SERVICES
1222 FIRST AVENUE, MS 301 SAN DIEGO, CA 92101-4101

INFORMATION BULLETIN

211

MARCH 2013

This information bulletin describes the minimum requirements for obtaining an attached or detached single family or duplex conventional light-frame wood construction. For futher clarification of the permit process, visit the Development Services Department website at http://www.sandiego.gov/development-services/.

I. WHEN IS A PERMIT REQUIRED?

A building permit is required for any residential deck more than 30 inches above grade.

II. YOUR OPTIONS FOR SERVICE

Deck plans may be reviewed "over-the-counter" when prepared in accordance with this information bulletin, Nationally Approved Agency or designed using conventional wood framing. Appointments for plan review are recommended. Call (619) 446-5300 to schedule an appointment. Plans not meeting the criteria for over-the-counter plan check must be submitted for plan review.

III. DRAWINGS TO PROVIDE/FORMS TO COMPLETE

Plans must be drawn to scale and must be of sufficient clarity to indicate the location, nature, and extent of the work proposed.

Three sets of plans are required.

A. Site Plan

Provide a site plan following Information Bulletin 122 for drawing requirements and drawing formats.

B. Foundation and Framing Plans

Provide one of the following:

1. Data from this information bulletin with the proposed footing sizes, rafter sizes and beam sizes or
2. A Report prepared nationally recognized approval agency or
3. Plans including a framing plan, foundation plan, elevations, cross-sections, and connection framing and connection details.

C. Floor Plan

For decks attached to the residence building, include a floor plan and show the following information:

1. Use and dimensions of all rooms opening onto the deck.
2. Location and size of all windows and doors from those rooms.

D. General Application

All projects must be submitted with a complete General Application.

Documents referenced in this Information Bulletin

- **2010 California Residential Code, (CRC)**
- **San Diego Municipal Code, (SDMC)**
- **Project Submittal Manual**
- **Information Bulletin 122, How to Prepare A Single Family Residential Site Plan and Vicinity Map**
- **Information Bulletin 501, Fee Schedule Construction Permit - Structures**
- **General Application, DS-3032**
- **Building Newsletter 23-4**

IV. ADDITIONAL REGULATIONS

A. An attached or detached deck cannot be closer than 2 feet from a property line. Decks that are located 2 to 5 feet from the property line, the deck underside including the vertical supports shall be protected with one hour fire resistive construction or be constructed of heavy timber.

B. If the single family or duplex is fire sprinkled, an attached or detached deck cannot be closer than 2 feet to the property line. Decks that are located 2 to 3 feet from the property line, the deck underside including the vertical supports shall be protected with one hour fire resistive construction or be constructed of heavy timber.

C. All electrical wiring and equipment must comply with regulations for exterior installation.

D. Decks located in the environmental sensitive lands, brush management zones, and very high fire hazard severity zones must comply with sections 143.0101, 142.0412, and section 145.0701 of the SDMC, respectively.

E. Decks located not more than 3 feet above proposed grade, with a railing not exceeding 42 inches in height, are permitted within a required side or rear yard. (SDMC 131.0461 (b)(10)])

F. For decks attached to the building or that modify the exterior of the building, smoke alarms and carbon monoxide alarms within the house maybe required per sections R314 and R315 of the 2010 California Residential Code (CRC).

V. ADDITIONAL REQUIREMENTS

The following are minimum construction specifications for decks.

A. The concrete mix for footings must meet a compressive strength of f'c= 2,500 psi minimum.

B. Lumber must be Douglas fir-larch No. 2 or better. All lumber must be grade-marked. Joists, girders, and posts may be required to be protected against decay and termites.

C. Girders in exterior wood decks, where the wood is not protected from direct rainfall, shall be of naturally durable wood (example redwood) or preservative treated wood. When wood is used as a ledger for supporting the wood deck, the ledger shall be of naturally durable wood or preservative treated wood. Framing hardware and fasteners shall be hot-dipped galvanized or stainless steel.

D. Post size is based on the height of the deck floor above finished grade (at the highest point):
0 to 8 feet high: 4x4 minimum,
8 to 10 feet high: 6x6 minimum

E. Handrails.
1. Type I. Handrails with a circular cross section shall have an outside diameter of at least 1.25 inches and not greater than 2 inches.
2. Type II. If the handrail is not circular it shall have a perimeter dimension of at least 4 inches and not greater than 6.25 inches with a maximum cross section dimension of 2. These edges shall have a minimum radius of 0.01 inch.
3. The clear space between a handrail and a wall or other surface shall be a minimum of 1.5 inches. A handrail and a wall or other surface adjacent to the handrail shall be free of any sharp or abrasive elements.

F. Guards shall provide for a complete protective barrier not less than 42" high completely around the deck if the deck is higher than 30" above grade. Guards shall not have openings which allow passage of a sphere of more than 4" in diameter.

G. Deck joists shall not overhang beams by more than two feet, and beams shall not overhang posts by more than a foot at the end of a deck unless an engineered beam or joist design is provided.

H. The post base anchorage and bracing details are shown on Figure 3 and 4.
1. Posts shall be anchored at the lower end and must be braced at the upper end using either of the details shown in Figure 3. The design and deck bracing is based on a maximum post spacing of 10 feet and maximum joist spacing of 16 inches.
2. Post anchorage to footings may be accomplished with a standard approved post base installed per manufacturer's instructions. See Section VII below and Table D.

I. When it is desired to connect and support one side of the deck structure by attaching it directly to a dwelling unit. The joist size and spacing and supporting girder sizes may be determined as shown in Tables A and C. However, the main girder may be replaced on the side attached to the dwelling unit with a ledger having the same size as the joists, but not less than 2 × 8 pressure-preservative-treated No.2 grade lumber, and fastened to the studs with 1/2" screws spaced per the table and staggered as shown in Figure 7.
1. Deck shall also be connected to single family dwellings with a lateral load connection as shown in Figure 10 and the hold-down tension devices shall be installed in not less than two locations per deck, and each device shall have an allowable stress design capacity of not less than 1500 pounds.
2. As an alternate connection, the deck may be connected to the house and perpendicular to the house at the deck post per Figure 3. The connection to the house must be centered on an interior wall stud or post.

J. Solid decks shall have a slope of a minimum of one-fourth unit vertical in 12 units horizontal.

K. The soil bearing pressure is 1,500 psf. If the above information differs, values in the tables must be adjusted.

L. If the placement of the deck is on or adjacent to slopes steeper than one unit vertical to 3 units horizontal (33.3% slope), the deck shall conform to Figure 1 per section R403.1.7 of the CRC.

VI. INSPECTIONS

Inspections are required at the following phases of construction:

A. When footings have been excavated but before concrete is placed.

B. When ledgers are attached to an existing structure.

C. Before framing is covered with lath and or plaster, and

D. When final work is complete.

The approved plans, the Inspection Record Card, and the permit are important records and should be retained at the project site.

TABLE A / Allowable residential deck joist span [1, 2, 3, 4, 5]

Size (inches)	Spacing (inches)	Allowable Spans (Feet and Inches)	
		DF/L # 2	Redwood
2x6	12	10' - 8"	9' - 8"
	16	9' - 6"	8' - 10"
	24	8' - 0"	7' - 8"
2x8	12	14' - 0"	12' - 9"
	16	12' - 6"	11' - 7"
	24	10' - 3"	10' - 1"

[1] If joists are within 6 inches of grade, use pressure-treated Douglas fir-larch or Foundation-Grade redwood.
[2] Values based on repetitive member use.
[3] "N/A" designation is for spans over 20 feet. Single pieces of sawn lumber of this length are generally special stock order items and have not been shown.
[4] Deflection base on L/360 (LL only)
[5] Load Duration Factor = 1.

TABLE B / Nailing schedule for decks [1, 2, 3]

Connection	Nails (Box or Common)
Joist to girder, toenail	3-8d
1" x 6" subfloor or less to joist , face nail (only for joist 16 inches on center)	2-8d
2 inches subfloor to joist blind and face nail	2-16d
3/4" exterior plywood to joist[2]	8d common 6 inches o.c. edge 12 inches o.c. field
1/8" exterior tongue-and grove plywood to girders at 4 feet maximum on center	10d common 6 inches o.c. edge 12 inches o.c. field[3]

[1] Decking within 8 inches of grade should be Foundation-Grade redwood or pressure-treated material.
[2] Second number in panel span rating must be equal to or greater than the deck joist spacing called out in Table 1.
[3] Nailing must be at 6 inches at all intermediate supports where spans are 48 inches or more

TABLE C / Minimum Girder Sizes (inches) [1, 2, 3]

Post Spacing (Feet)	Joist Span (feet)					
	4	6	8	10	12	14
4	4x4	4x6	4x6	4x8	4x10	4x10
6	4x6	4x8	4x8	4x10 6x8	4x10 6x8	4x14 6x10
8	4x10 6x8	4x10 6x8	4x12 6x10	4x12 6x10	4x14 6x12	4x14 6x12
10	4x10 6x10	4x14 6x12	4x14 6x12	4x16 6x14	4x16 6x14	4x16 6x14

[1] If joists are within 18 inches of grade, use pressure-treated. Douglas fir-larch or Foundation-Grade redwood.
[2] Deflection is base on L/360 (LL only)
[3] Load Duration Factor = 1.

TABLE D / Minimum Square Footing Sizes (inches) [1]

Post Spacing (Feet)	Joist Span (feet)					
	4	6	8	10	12	14
4	12	14	16	18	20	20
6	14	16	20	22	24	24
8	16	20	22	24	26	28
10	18	22	24	28	30	32

[1] Assume reinforcing bar size #4 top and bottom, rebar yield Fy=60 ksi

TABLE E / Fastener Spacing for a Southern Pine or Hem-Fir on Redwood or Douglas Fir #2 Deck Ledger and a 2-Inch Nominal Solid-Sawn Spruce-Pine-Fir-Redwood Band Joist [c, f, g]
(Deck live load = 40 psf, deck dead load = 10 psf)

Post Spacing (feet)	6' and less	6'1" to 8'	8'1" to 10'	10'1" to 12'	12'1" to 14'
Connection details	**On-center spacing of fasteners [d, e]**				
1/2 inch diameter lag screw with 15/32 inch maximum sheathing [a]	**30**	**23**	**18**	**15**	**13**
1/2 inch diameter bolt with 15/32 inch maximum sheathing	36	36	34	29	24
1/2 inch diameter bolt with 15/32 inch maximum sheathing and 1/2 inch stacked washers [b, h]	**36**	**36**	**29**	**24**	**21**

For SI: 1 inch = 25.4 mm, 1 foot = 304.8 mm. 1 pound per square foot = 0.0479 kPa.

[a] The tip of the lag screw shall fully extend beyond the inside face of the band joist.
[b] The maximum gap between the face of the ledger board and face of the wall sheathing shall be 1/2".
[c] Ledgers shall be flashed to prevent water from contacting the house band joist.
[d] Lag screws and bolts shall be staggered in accordance with Section R502.2.2.1.1.
[e] Deck ledger shall be minimum 2 × 8 pressure-preservative-treated No.2 grade lumber, or other approved materials as established by standard engineering practice.
[f] When solid-sawn pressure-preservative-treated deck ledgers are attached to a minimum 1 inch thick engineered wood product (structural composite lumber, laminated veneer lumber or wood structural panel band joist), the ledger attachment shall be designed in accordance with accepted engineering practice.
[g] A minimum 1 × 91/2 Douglas Fir laminated veneer lumber rimboard shall be permitted in lieu of the 2-inch nominal band joist.
[h] Wood structural panel sheathing, gypsum board sheathing or foam sheathing not exceeding 1 inch in thickness shall be permitted. The maximum distance between the face of the ledger board and the face of the band joist shall be 1 inch.

Figure 1 / Structures On or Adjacent to Slops
Foundation clearances from slopes

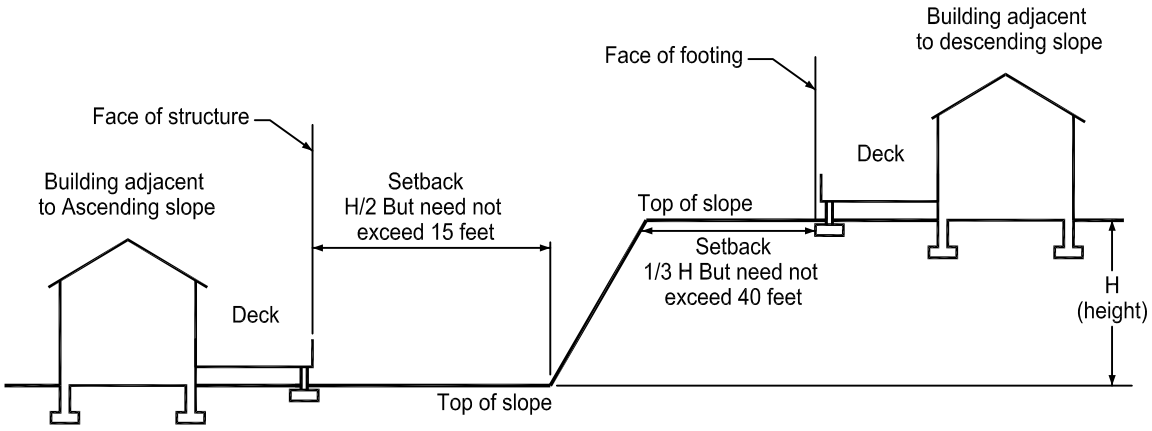

Figure 2 / Typical Deck

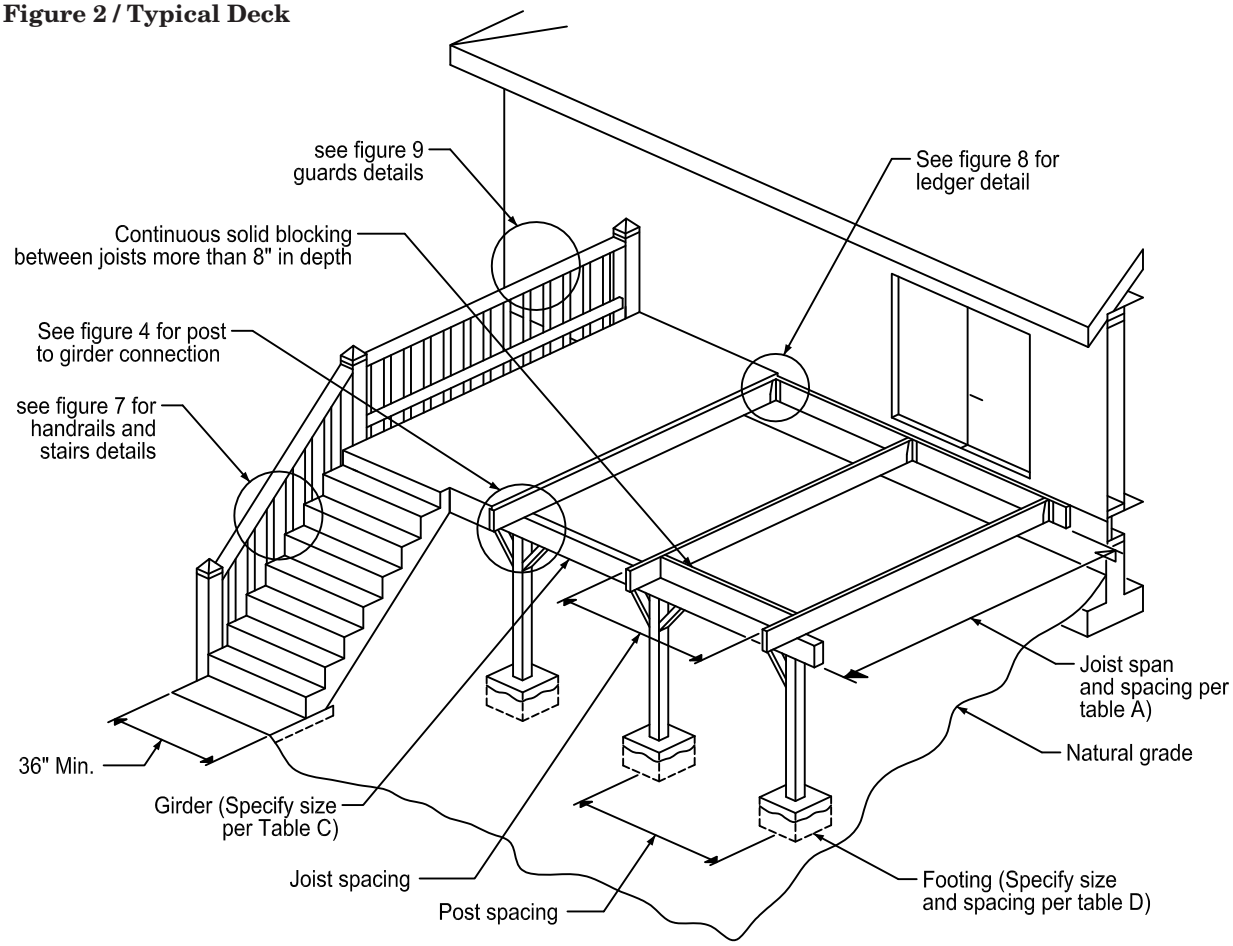

WOOD DECKS IN AREAS WITHIN VERY HIGH FIRE HAZARD SEVERITY ZONES OR CITY of SAN DIEGO BRUSH MANAGEMENT ZONES MAY BE SUBJECT TO ADDITIONAL REQUIREMENTS

Figure 3 / Post-to-Girder Connection

Case 1 / Connection, Interior Condition **Case 2 / Interior Condition**

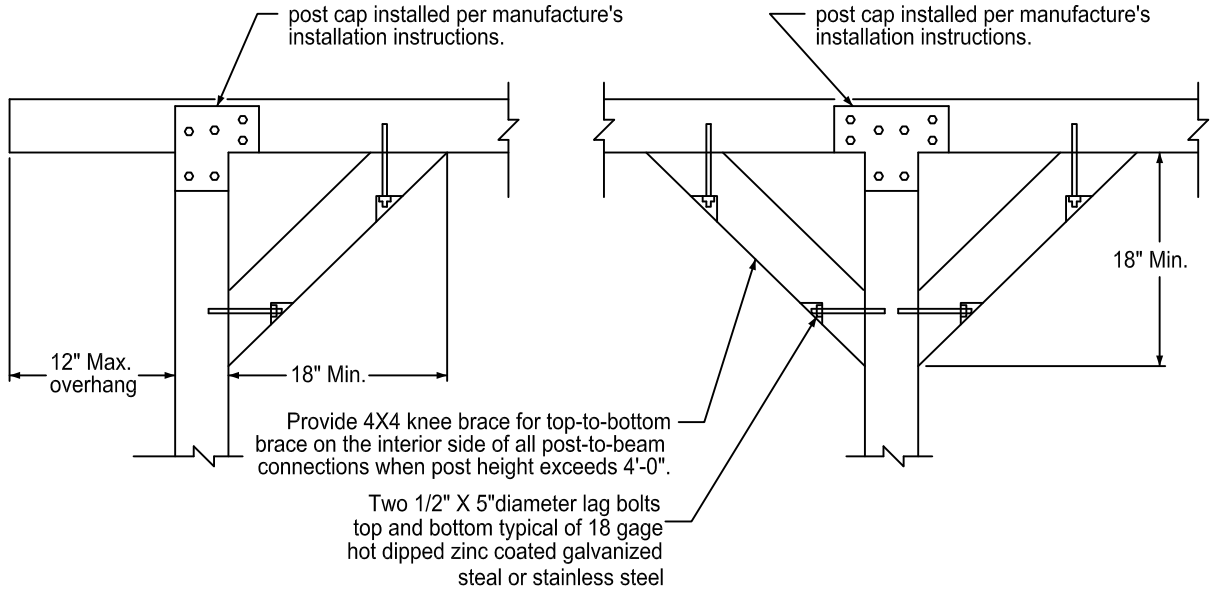

Figure 4 / Typical Deck Elevation Looking Parallel to Rear of Dwelling

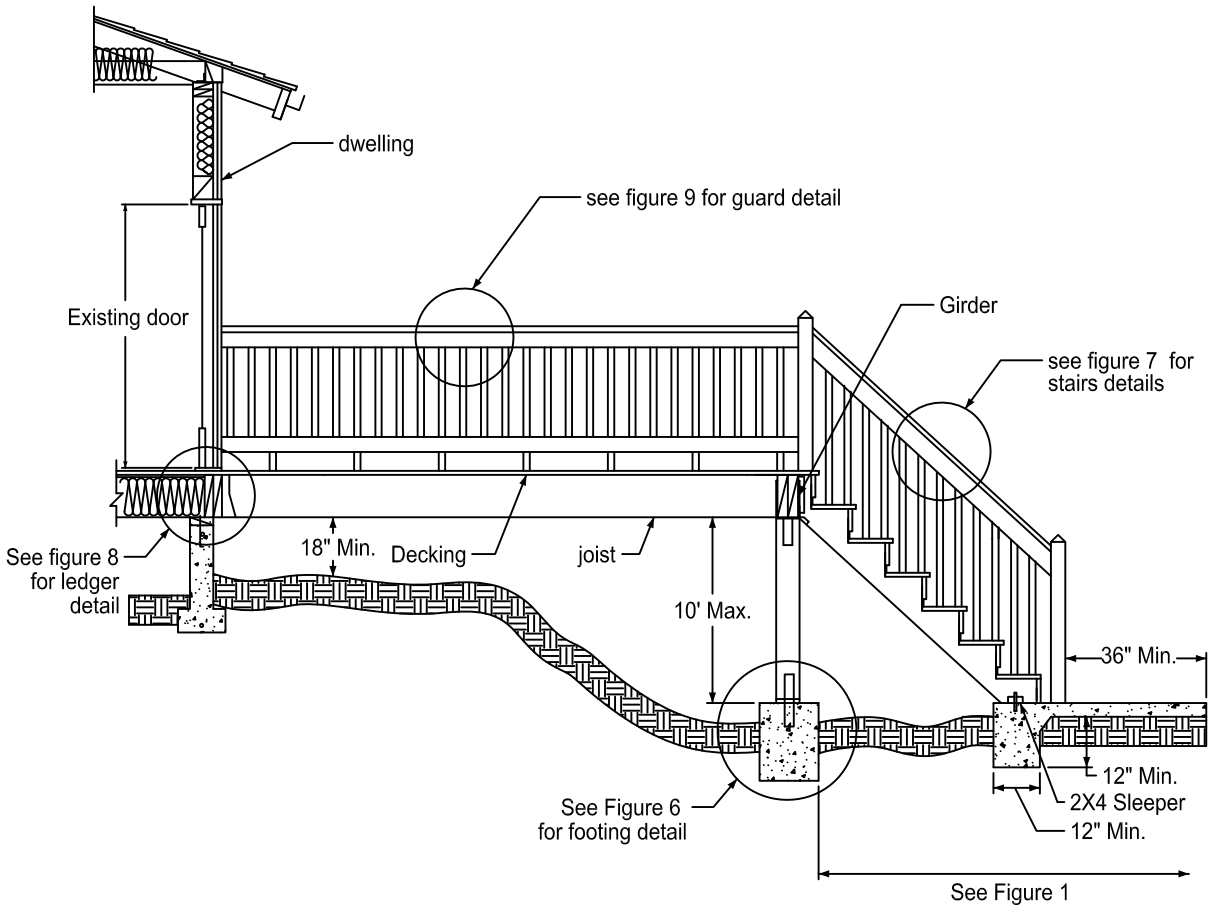

WOOD DECKS IN AREAS WITHIN VERY HIGH FIRE HAZARD SEVERITY ZONES OR CITY of SAN DIEGO BRUSH MANAGEMENT ZONES MAY BE SUBJECT TO ADDITIONAL REQUIREMENTS

Figure 5 / Typical Footing Detail

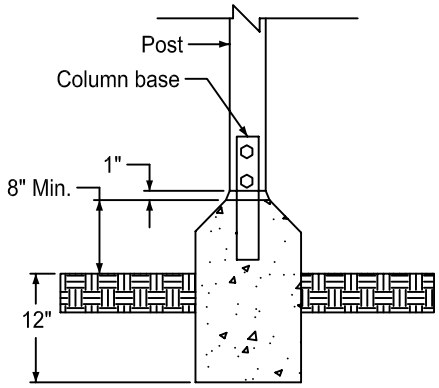

Figure 6 / Typical Stairs Detail

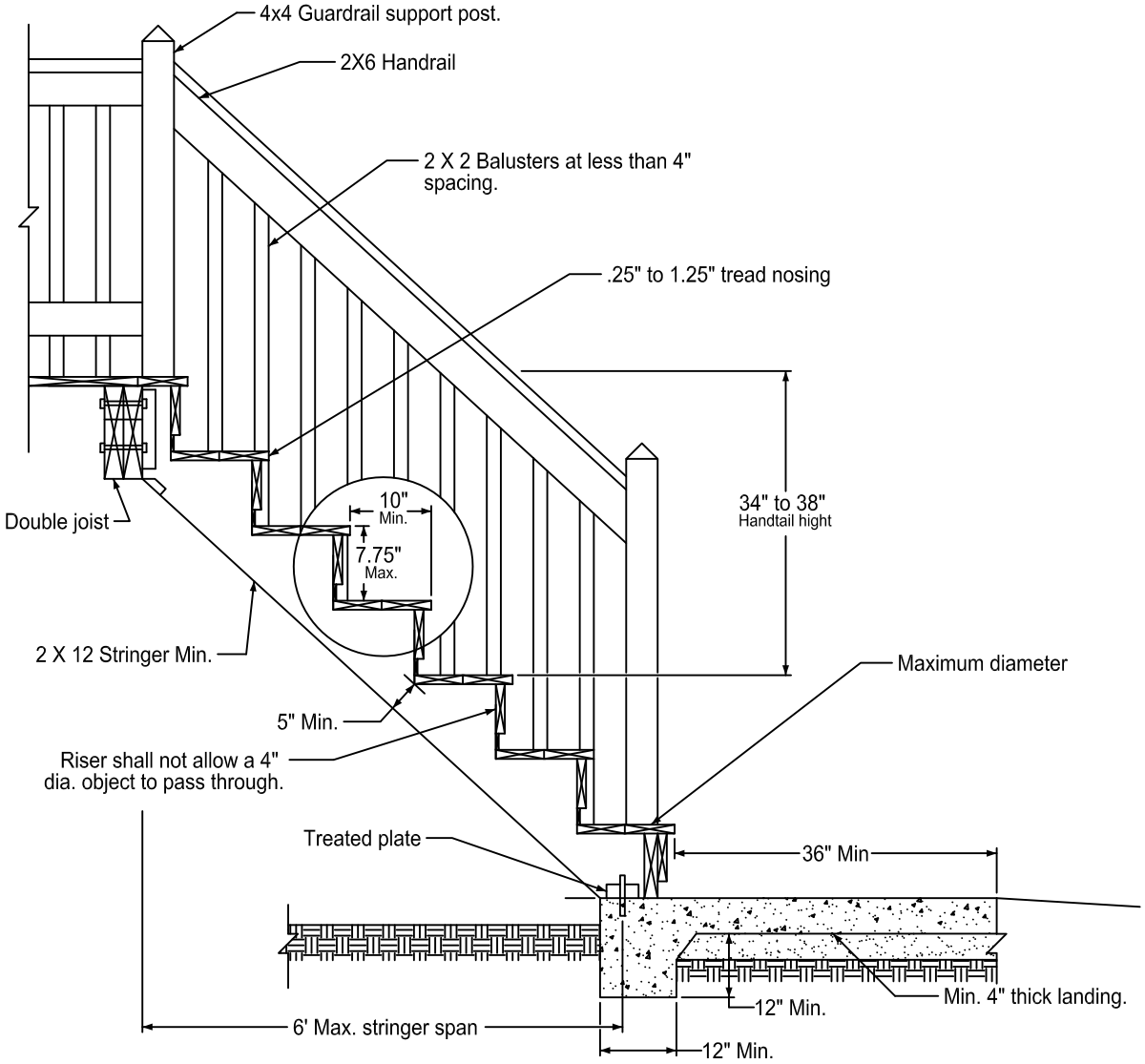

WOOD DECKS IN AREAS WITHIN VERY HIGH FIRE HAZARD SEVERITY ZONES OR CITY of SAN DIEGO BRUSH MANAGEMENT ZONES MAY BE SUBJECT TO ADDITIONAL REQUIREMENTS

Figure 7 / Typical Ledger Detail

Case 1 / Ledger to Rim Joist Connection

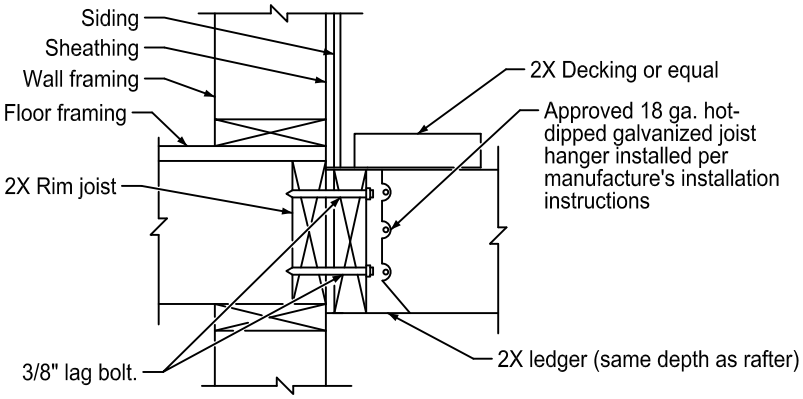

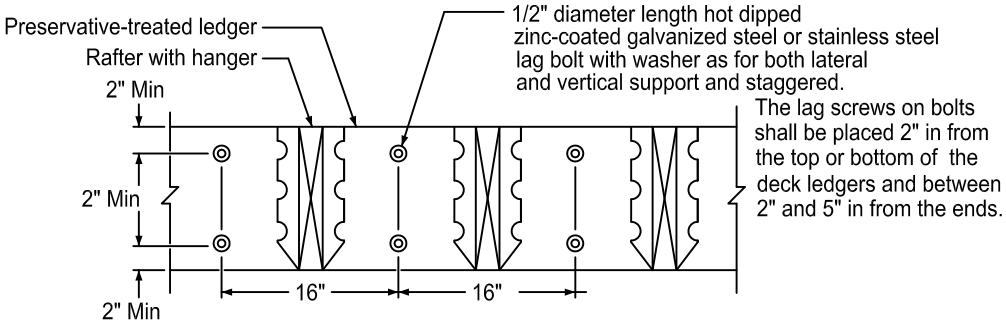

Case 2 / Ledger to Stem Wall Connection (detached deck)

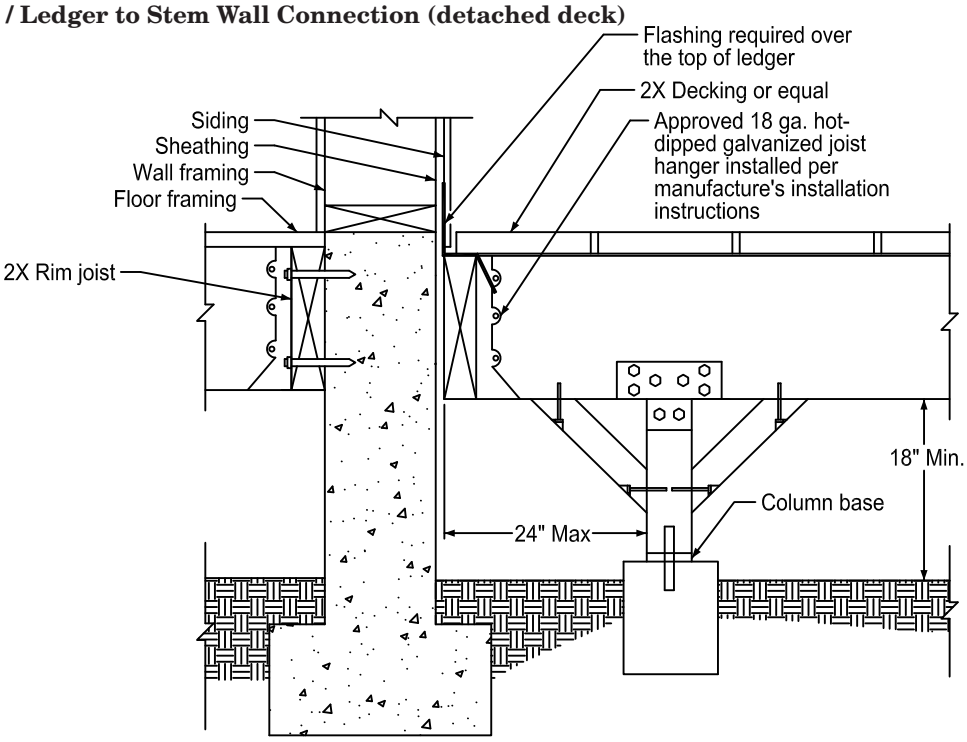

WOOD DECKS IN AREAS WITHIN VERY HIGH FIRE HAZARD SEVERITY ZONES OR CITY of SAN DIEGO BRUSH MANAGEMENT ZONES MAY BE SUBJECT TO ADDITIONAL REQUIREMENTS

Figure 8 / Typical Guards Details

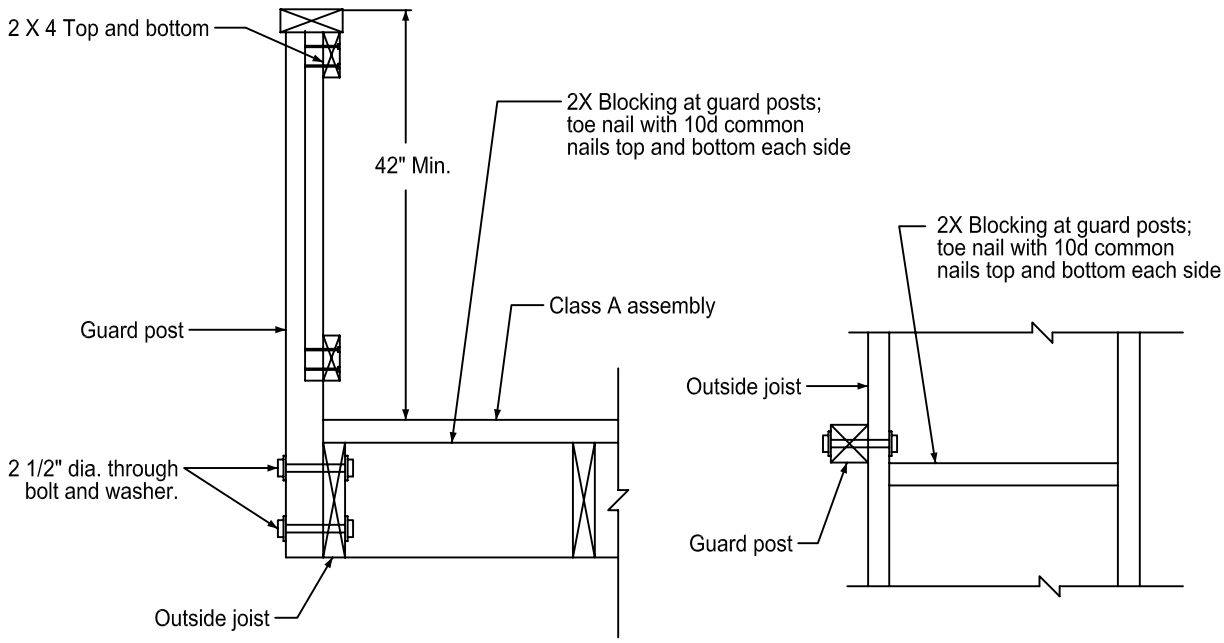

Figure 9 / Typical Deck Elevation Facing Rear of Dwelling

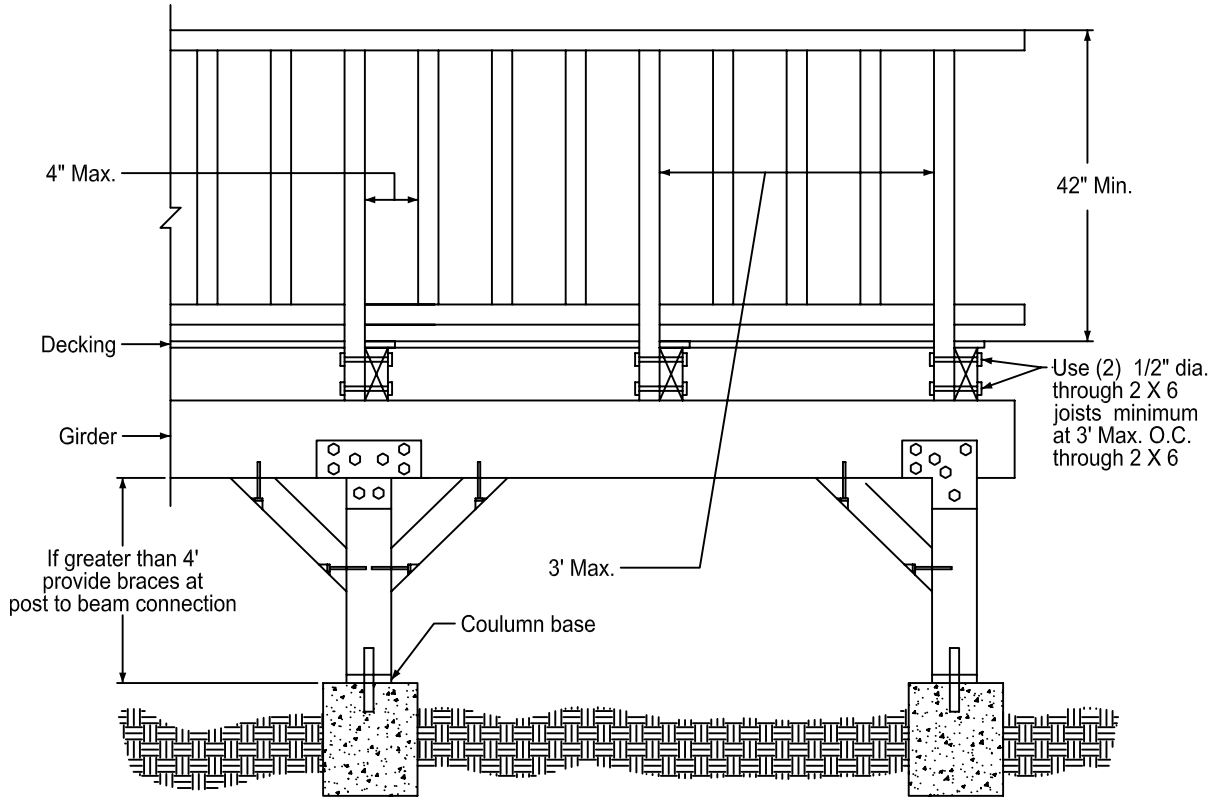

WOOD DECKS IN AREAS WITHIN VERY HIGH FIRE HAZARD SEVERITY ZONES OR CITY of SAN DIEGO BRUSH MANAGEMENT ZONES MAY BE SUBJECT TO ADDITIONAL REQUIREMENTS
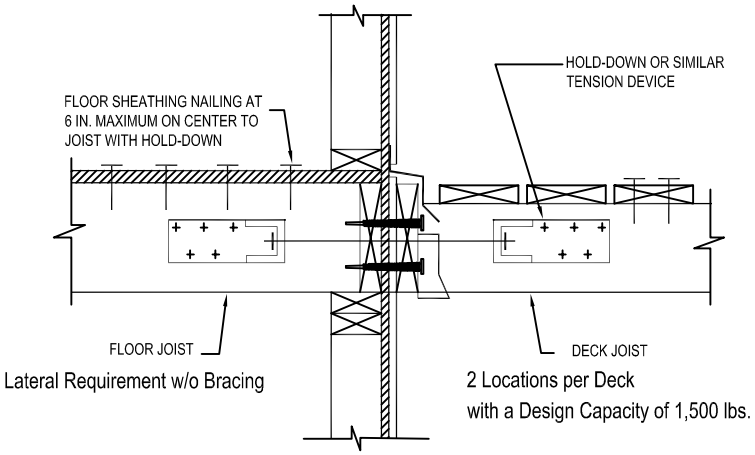
Figure 10 / Deck Attachment for Lateral Loads. Two Locations required, spread apart as far as possible with the best condition as the outbard face to the outboard face.