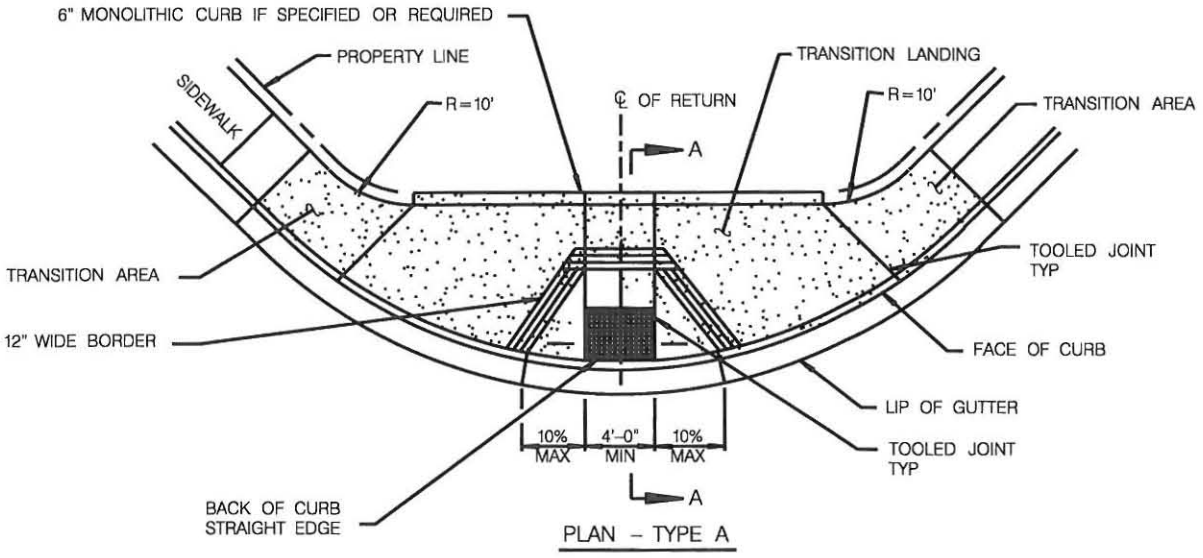

PLAN – TYPE A

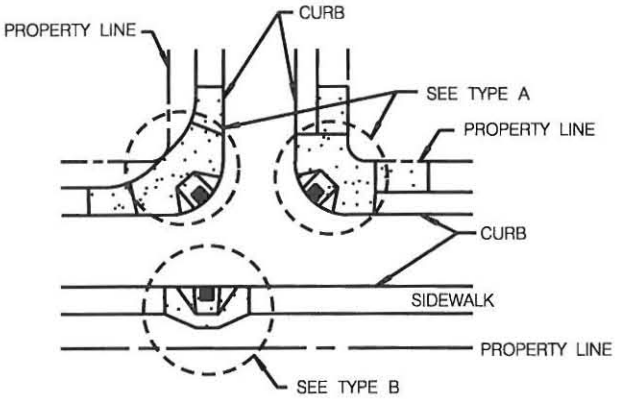

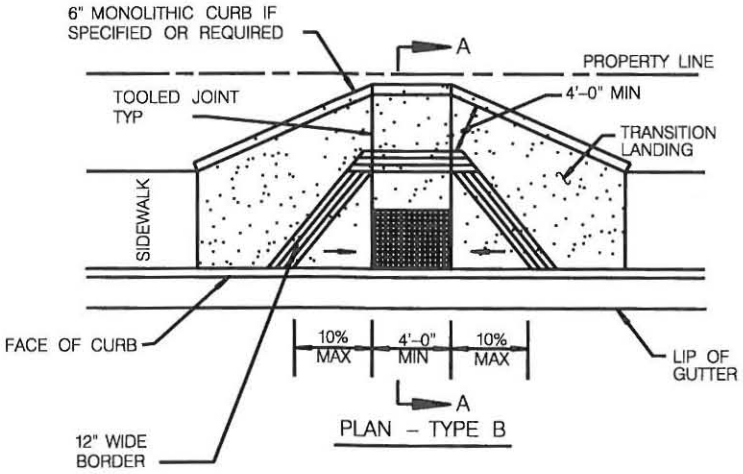

PLAN – TYPE B

NOTE:

1. SEE SDG-130 FOR ADDITIONAL CURB RAMP DETAILS AND INFORMATION.

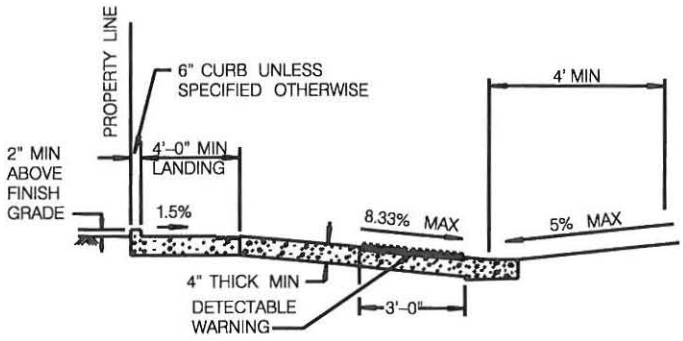

SECTION A–A

REVISION	BY	APPROVED	DATE
ORIGINAL	FC	A. OSKOUI	12/03
UPDATE	FC	A. OSKOUI	12/06
UPDATE	FC	A. OSKOUI	12/08
UPDATE	KA	A. OSKOUI	09/10

CITY OF SAN DIEGO – STANDARD DRAWING

CURB RAMP - TYPES A AND B

RECOMMENDED BY THE CITY OF SAN DIEGO STANDARDS COMMITTEE

COORDINATOR R.C.E. 65271 DATE

DRAWING NUMBER **SDG-132**