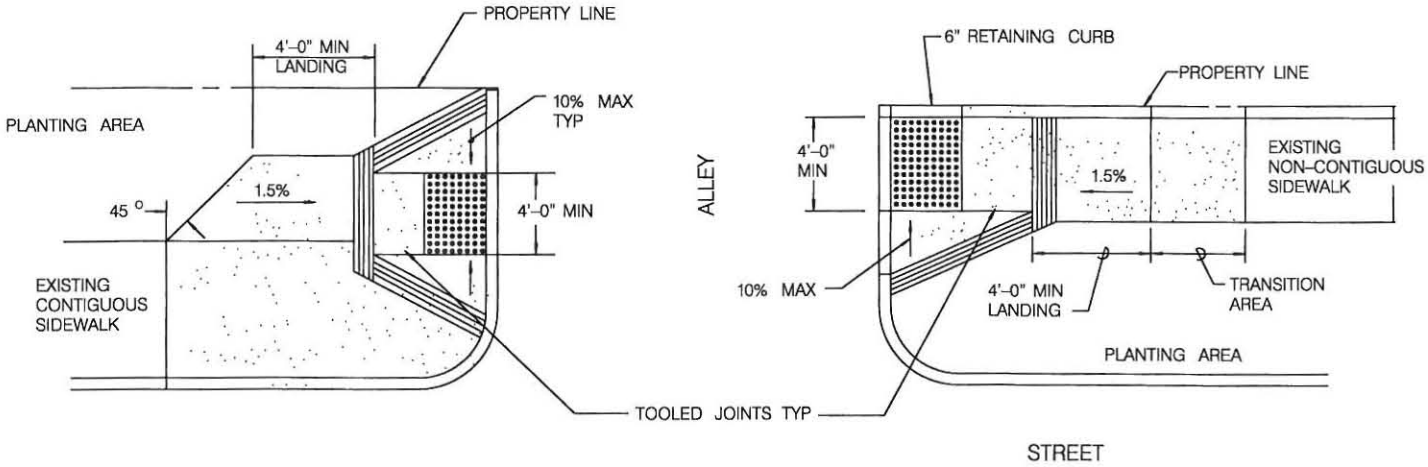

TYPICAL PLAN

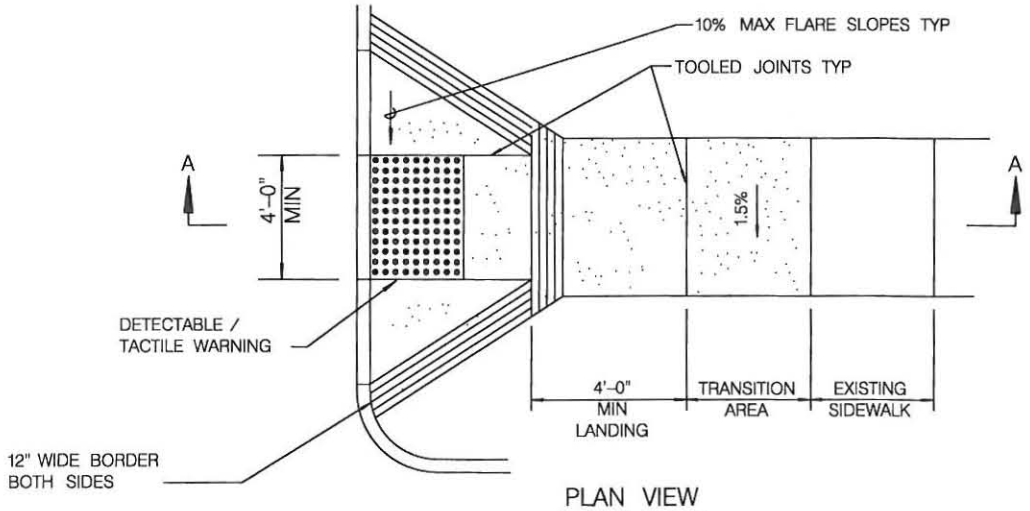

PLAN VIEW

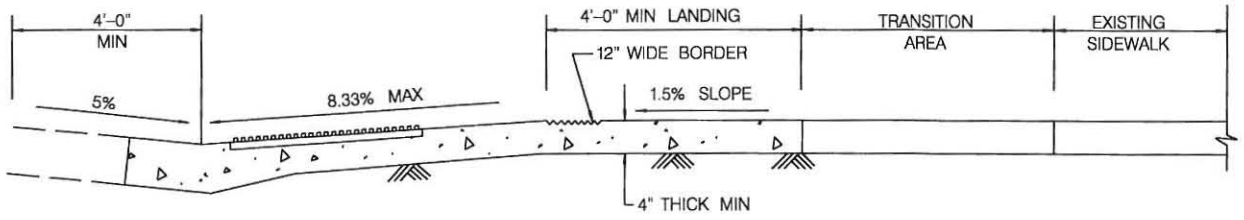

SECTION A–A

NOTES:

1. SEE SDG-130 FOR ADDITIONAL CURB RAMP DETAILS AND INFORMATION

REVISION	BY	APPROVED	DATE
ORIGINAL	SM	A. OSKOUI	12/03
UPDATE	FC	A. OSKOUI	12/06
UPDATE	FC	A. OSKOUI	12/08
UPDATE	KA	A. OSKOUI	09/10

CITY OF SAN DIEGO – STANDARD DRAWING

CURB RAMP - TYPE D

RECOMMENDED BY THE CITY OF SAN DIEGO STANDARDS COMMITTEE

COORDINATOR R.C.E. 65271 DATE

DRAWING NUMBER **SDG-136**