FINAL BIOLOGICAL AERATED FILTER (BAF) PILOT STUDY

CITY OF SAN DIEGO

June 2005

Prepared by:

BROWN AND CALDWELL

9665 Chesapeake Drive, Suite 201
San Diego, California 92123

Final Biological Aerated Filter Pilot Study

San Diego City Council

Dick Murphy	**Mayor**
Scott Peters	**Council District 1**
Michael Zucchet	**Council District 2 & Deputy Mayor**
Toni Atkins	**Council District 3**
Tony Young	**Council District 4**
Brian Maienschein	**Council District 5**
Donna Frye	**Council District 6**
Jim Madaffer	**Council District 7**
Ralph Inzunza	**Council District 8**

Metropolitan Wastewater Department

Scott Tulloch	**Director**
Bob Ferrier	**Assistant Director**

Engineering and Program Management Division

Ann Sasaki	**Deputy Director**
Allen Holden	**Assistant Deputy Director**
Pete Wong	**Senior Civil Engineer & Senior Project Manager**
Amer Barhoumi	**Associate Civil Engineer & Project Manager**
Monika Smoczinski	**Assistant Civil Engineer**
Steve Suhendra	**Assistant Civil Engineer**

Technical Services Division

Alan Langworthy	**Deputy Director & Project Director**
Walter Konopka	**Senior Chemist**
Brent Bowman	**Associate Chemist**

Operations and Maintenance Division

Lori Veriker	**Deputy Director**
Jesse Pagliaro	**Assistant Deputy Director**
Jerry Williams	**Senior Civil Engineer**
Joe Cordova	**Plant Superintendent**
Jim Lindsay	**Senior Wastewater Operations Supervisor**
KC Shankles	**Wastewater Operations Supervisor**
Claude Janowicz	**Wastewater Operations Supervisor**
Mitch Dornfeld	**Plant Operator**

Brown and Caldwell

George Khoury	**Principal-in-Charge**
Victor Occiano	**Project Manager**
Josh Newman	**Assistant Project Manager**
Seval Sen	**Project Engineer**
Anil Pai	**Project Engineer**
Nick Boswell	**Project Engineer**
Denny Parker	**Technical Advisor, QA/QC**
Henryk Melcer	**Technical Advisor, QA/QC**
Ron Appleton	**Technical Advisor, QA/QC**

CONTENTS

APPENDICES iii
TABLES iv
FIGURES vi

EXECUTIVE SUMMARY E-1
SECTION 1 INTRODUCTION 1-1
Metropolitan Sewerage System and Existing Facilities 1-1
Secondary Treatment Requirement Modification 1-3
Project Driver 1-4
Pilot Test Elements and Objectives 1-5
Phase I – BAF with Existing PLWTP Facilities 1-6
Phase II – BAF with Densadeg 1-7
Stress Testing 1-7
Off-Gas Testing 1-8
Media Sampling 1-8
Other Tests 1-8
DAFT Feasibility 1-8
NOD Impact 1-9
SECTION 2 WASTEWATER TREATMENT ALTERNATIVES 2-1
Primary Treatment Alternatives 2-1
Existing Primary Sedimentation Basins (PSBs) 2-1
High Rate Clarification 2-1
Actiflo 2-2
Densadeg 2-2
Secondary Treatment Alternatives 2-3
Biological Aerated Filters 2-4
BAF Options 2-5
Biofor 2-6
Biostyr 2-7
SECTION 3 PILOT TEST PLAN AND IMPLEMENTATION 3-1
Pilot Test Criteria 3-1
Pilot Test Schedule and Events 3-3
Phase I 3-5
Phase II 3-6
Off-Gas Testing 3-9
Stress Testing – Densadeg 3-9
Stress Testing – BAF 3-9
Other Tests 3-11
Sampling Protocol 3-11
Daily Composite Sampling 3-11
Daily Monitoring 3-11

Meter Readings 3-11
Pilot Instrument Readings 3-11
Headloss Measurements. 3-12
Backwash Grab Sampling and Monitoring 3-12
Settleability of Backwash Solids 3-12
Sampling and Monitoring Diurnal TBOD 3-12
Coliform and MS2 Bacteriophage Testing 3-12
Bioassay 3-13
Collimated Beam Analysis 3-13

SECTION 4 BAF PILOT TESTING – RESULTS AND DISCUSSIONS 4-1

The Need for Biofor-N 4-1
Compliance with Anticipated Regulatory Standards 4-3
Biostyr Compliance with Projected Effluent Requirements 4-16
Biofor-C Compliance with Projected Effluent Requirements 4-16
Constraints on Effluent Requirements 4-16
Nitrogenous Oxygen Demand 4-17
Particulate and Soluble $CBOD_5$ 4-21
Effect of Hydraulic Loading Rate on BAF Performance 4-23
Biostyr Performance 4-24
Biofor–C Performance 4-26
Effect of Organic Loading Rate on BAF Performance 4-28
Biostyr Performance 4-28
Biofor-C Performance 4-30
Diurnal Organic Concentration Profiles 4-32
Diurnal BAF Influent and Effluent $CBOD_5$ and $SCBOD_5$ Organic Concentration Profiles 4-32
Diurnal BAF Influent and Effluent $TBOD_5$ and $SBOD_5$ Organic Concentration Profiles 4-32
Backwash – Requirements and Solids Generation Rate 4-35
Backwash Frequency, Duration, and Volume Generated 4-36
Air Requirements 4-36
Solids Generation 4-37
Settleability of BAF Solids 4-41
Thickening BAF Backwash Water 4-44
Dedicated Thickening of BAF Backwash Solids 4-45
Co-thickening of the Blended Primary Sludge and BAF Backwash Water 4-46
Thickening Process Recycle Stream Management 4-48
BAF Oxygen Transfer Efficiency (OTE), Aeration and Power Requirements 4-49
OTE 4-50
Estimation of Full-Scale Aeration and Power Requirements 4-53
BAF Stress Testing 4-54
Affect of Hydraulic Stress on Treatment Capacity 4-56
Backwash Volume as a Percentage of the Treated Wastewater 4-61
Headloss Development Along the BAF Column 4-68

Fate of Phosphorus Compounds in BAF Column 4-69
Pathogen Removal 4-70
Results of Bacteria and Virus Testing 4-71
Effluent Toxicity 4-72
Evaluation of the Biomass 4-73
SECTION 5 DENSADEG PILOT TESTING – RESULTS AND DISCUSSIONS 5-1
Densadeg Data Evaluation 5-1
Comparison of Densadeg Performance with the Existing CEPT Performance 5-2
Effect of Installation of Grit Removal System on Densadeg Performance 5-6
Effect of Hydraulic Loading Rate on Densadeg Performance 5-6
Densadeg Performance at HLR of 10.25 gpm/ft^2 5-7
Densadeg Performance at HLR of 12.4 gpm/ft^2 5-8
Effect of Solids Loading Rate on Densadeg Performance 5-9
Effect of Co-settling on Densadeg Performance 5-11
Operational Requirements 5-12
Ferric Chloride 5-12
Polymer 5-12
Sludge Blanket Level 5-12
Solids Wasting Rate 5-12
Densadeg Process Control Issues 5-12
SECTION 6 COST IMPLICATIONS OF STUDY RESULTS 6-1
Facility Components and Sizing 6-1
BAF Process 6-1
Solids Handling 6-1
Densadeg 6-2
Operations and Maintenance Costs 6-2
BAF Process 6-2
Densadeg Process 6-2
SECTION 7 CONCLUSIONS AND RECOMMENDATIONS 7-1
Conclusions 7-1
Recommendations 7-13

APPENDICES

APPENDIX A. SECONDARY TREATMENT ALTERNATIVE EVALUATION

APPENDIX B. VENDOR PROPOSALS – INFILCO DEGREMONT, INC./KRÜGER

APPENDIX C. MECHANICAL PROBLEMS WITH BIOSTYR, BIOFOR-C AND BIOFOR-N UNITS IN PHASE I

APPENDIX D. BIOLOGICAL AERATED FILTER FOR THE POINT LOMA WASTEWATER TREATMENT PLANT PROTOCOL FOR PHASE I AND PHASE II PILOT TESTING

APPENDIX E. PHASE I AND II LAB ANALYSIS RESULTS
PHASE I AND II PRESSURE PLOTS

APPENDIX F. OFF-GAS TESTING REPORT

APPENDIX G. DATA FOR DAFT EXPERIMENTS

APPENDIX H. ESTIMATE OF AERATION REQUIREMENTS

APPENDIX I. BAF STRESS TESTING PROTOCOL

APPENDIX J. BACTERIA AND VIRUS DATA

APPENDIX K. MEDIA SOLIDS MEASUREMENT PROTOCOL

APPENDIX L. DATA FOR CO-SETTLING EXPERIMENTS

TABLES

No. **Page**

1.1 Typical Secondary Treatment Plant Effluent Requirements 1-3
1.2 Current PLWTP Effluent Standards 1-4
1.3 Proposed Facilities under the 2003 Metropolitan Wastewater Plan 1-4
2.1 Top Four Biological Treatment Options for the PLWTP 2-4
3.1 Design Flow and Load Conditions for PLWTP BAF Facilities 3-1
3.2 Proposed Full-Scale BAF Facility Parameters 3-2
3.3 Design Criteria Proposed by BAF Vendors 3-2
3.4 Full-Scale Densadeg Design Criteria Proposed by IDI 3-2
3.5 Pilot Test Schedule 3-4
3.6 BAF Stress Testing Operating Conditions 3-10

4.1 Initial Influent and Target Effluent PLWTP Wastewater Quality Provided to BAF Manufacturers 4-1
4.2 Comparison of Secondary Treatment Standards versus Maximum 30-Day Running Average Concentration Measured during Phase I 4-3
4.3 Effluent Particulate $CBOD_5$ to TSS Ratio 4-22
4.4 Effluent TSS Versus Estimated Allowable Effluent $SCBOD_5$ 4-22
4.5 Average Value and Ranges of the $SCBOD_5$ as a Percent of the $CBOD_5$ 4-23
4.6 Summary of Wet Weather Hydraulic Loading Conditions Tested 4-23
4.7 Summary of Dry Weather Hydraulic Loading Conditions Tested 4-24
4.8 Peak Hydraulic and $TBOD_5$ Loading Conditions Tested 4-28
4.9 Spent Backwash Water Quality Based on Pilot Findings in Phase I 4-35
4.10 Spent Backwash Water Quality Based on Pilot Findings in Phase II 4-35
4.11 Daily Average Backwash Volume Generated by BAF Pilot Units 4-36
4.12 Backwash Air Requirement per Backwash Event 4-36
4.13 Average Solids Yield (in lb TSS/lb $TBOD_5$ Removed) 4-37
4.14 Estimated ISS Production for the Biostyr and Biofor-C Columns 4-39
4.15 Estimated Full-Scale Daily Solids Production Rates for Further Sludge Processing Needs 4-41
4.16 BAF Backwash Solids SVI Values in Phase I 4-42
4.17 BAF Backwash Solids SVI Values in Phase II 4-42
4.18 Backwash Supernatant and Solid Quality Data for Phase I 4-43
4.19 Backwash Supernatant and Solid Quality Data for Phase II 4-43
4.20 Summary of DAFT Trails for Dedicated BAF Backwash Thickening 4-45
4.21 Summary of DAFT Trails for Co-Thickening of BAF Backwash and CEPT Sludge 4-47
4.22 Assessment of Thickening Process Recycle Stream Management Assuming Dedicated BAF Backwash Thickening 4-48
4.23 Assessment of Thickening Process Recycle Stream Management Assuming Co-Thickening of BAF Backwash and PLWTP CEPT Sludge 4-49
4.24 Comparison of Pilot-Study-Based Aeration Requirements with those Proposed by the Manufacturers 4-54
4.25 Stress Test Target Hydraulic Loading Rates 4-55
4.26 Stress Test Actual Hydraulic Loading Rates 4-55
4.27 Stress Test Treated Wastewater and Spent Backwash Volumes 4-62
4.28 Summary of Organic Loading Rates During Stress Testing 4-62
4.29 Phase I Bacteria and Virus Removals in BAF Units 4-71
4.30 Phase II Bacteria and Virus Removals in BAF Units 4-71
4.31 Chronic Bioassay Results 4-72
4.32 Acute Bioassay (LC_{50}) Results 4-73
5.1 Densadeg Average HLR, TSS Loading Rate, Influent and Effluent Wastewater Quality 5-7
5.2 Densadeg Influent and Effluent TSS, $TBOD_5$, $CBOD_5$ Values 5-8

FIGURES

No. **Page**

1.1 The Point Loma Wastewater Treatment Plant 1-2
2.1 Diagram of the Actiflo Process 2-2
2.2 Densadeg High Rate Clarification Process 2-2
2.3 Biofor BAF 2-6
2.4 Diagram of the Biostyr System 2-7
3.1 BAF Pilot Units 3-5
3.2 Phase I BAF Pilot Test Process Flow Diagram 3-7
3.3 Phase II BAF Pilot Test Process Flow Diagram 3-8
3.4 Photo of Media in Biostyr Column 3-9
3.5 Photo of Pressure Transducer Mounted on BAF Column 3-12
3.6 Photo of Backwash Sample Settling in Imhoff Cone 3-12
4.1 30-Day Average $TBOD_5$ Concentration During Phase I of BAF Pilot 4-4
4.2 7-Day Average $TBOD_5$ Concentration During Phase I of BAF Pilot 4-5
4.3 30-Day Average $CBOD_5$ Concentration During Phase I of BAF Pilot 4-6
4.4 7-Day Average $CBOD_5$ Concentration During Phase I of BAF Pilot 4-7
4.5 30-Day Average TSS Concentration During Phase I of BAF Pilot 4-8
4.6 7-Day Average TSS Concentration During Phase I of BAF Pilot 4-9
4.7 30-Day Average $TBOD_5$ Concentration During Phase II of BAF Pilot 4-10
4.8 7-Day Average $TBOD_5$ Concentration During Phase II of BAF Pilot 4-11
4.9 30-Day Average $CBOD_5$ Concentration During Phase II of BAF Pilot 4-12
4.10 7-Day Average $CBOD_5$ Concentration During Phase II of BAF Pilot 4-13
4.11 30-Day Average TSS Concentration During Phase II of BAF Pilot 4-14
4.12 7-Day Average TSS Concentration During Phase II of BAF Pilot 4-15
4.13 NOD_5 and $TBOD_5$ versus TSS for Biostyr Effluent 4-19
4.14 NOD_5 and $TBOD_5$ versus TSS for Biofor-C Effluent 4-20
4.15 Relationship Between Nitrogenous Oxygen Demand and Effluent SS 4-21
4.16 Effect of HLR on Effluent $TBOD_5$, $CBOD_5$ and TSS Concentration for Biostyr 4-25
4.17 Effect of HLR on Effluent $TBOD_5$, $CBOD_5$ and TSS Concentration for Biofor-C 4-27
4.18 Effect of Organic Loading Rate on Effluent $TBOD_5$, $CBOD_5$ and TSS Concentration for Biostyr 4-29
4.19 Effect of Organic Loading Rate on Effluent $TBOD_5$, $CBOD_5$ and TSS Concentration for Biofor-C 4-31
4.20 Diurnal $CBOD_5$, and $SCBOD_5$, Profile for April 15-16, 2004 4-33
4.21 Diurnal $CBOD_5$ and $SCBOD_5$ Profile for April 17-18, 2004 4-34
4.22 Phase I -Log Normal Probability Plots for Biostyr and Biofor-C Sludge Production Data .. 4-38
4.23 Photo of Sample Settling in Imhoff Cone 4-41
4.24 DAFT Bench-scale Unit With BAF Backwash 4-45
4.25 DAFT Bench-scale Unit BAF Backwash/Primary Sludge Mixture 4-47
4.26 Normalized Off-Gas Testing Data 4-51
4.27 Design Oxygen Transfer Efficiency 4-52
4.28 BAF Stress Testing TSS Results 4-57
4.29 BAF Stress Testing $TBOD_5$ Results 4-58

4.30 BAF Stress Testing $CBOD_5$ Results 4-59
4.31 Time Plot of Biofor-C Effluent TSS During Trial 3 Showing TSS Breakthrough Due to Process Control Error 4-60
4.32 Biofor-C Effluent TSS versus NOD_5 Concentrations During Stress Testing 4-61
4.33 Average Percent of Cells That Must Be in Backwash Mode as a Function of Organic Loading Rate 4-64
4.34 Average Percent of Cells That Must Be in Backwash Mode as a Function of Solids Loading Rate 4-66
4.35 Pressure Sensor Locations along the Biofor-C and Biostyr Columns 4-68
4.36 Normal Pressure Readings along the Biofor-C and Biostyr Columns 4-68
4.37 Pressure Readings along the Biofor-C and Biostyr Columns Experiencing High Solids Loading 4-69
4.38 Biostyr Microscopic Photos Showing Live Higher Forms in Backwash Sample 4-74
4.39 Biofor-C Microscopic Photos Showing Live Higher Forms in Backwash Sample 4-75
4.40 Photo of Media Sampler Used to Collect Biostyr Media at Discrete Depths 4-77
4.41 Photo of Media Sample Taken with Sampler Shown in Figure 4.40. 4-78
5.1 Densadeg Unit Influent and Effluent TSS Concentrations 5-2
5.2 CEPT Full-Scale and Densadeg Pilot Unit Influent and Effluent TSS Concentrations and TSS Removal Efficiencies 5-4
5.3 CEPT Full-Scale and Densadeg Pilot Unit Influent and Effluent $TBOD_5$ Concentrations and $TBOD_5$ Removal Efficiencies 5-4
5.4 CEPT Full-Scale and Densadeg Pilot Unit Influent and Effluent $SBOD_5$ Concentrations and $SBOD_5$ Removal Efficiencies 5-5
5.5 CEPT Full-Scale and Densadeg Pilot Unit Influent and Effluent COD Concentrations and COD Removal Efficiencies 5-5
5.6 CEPT Full-Scale and Densadeg Pilot Unit Sludge Percent Total Solids Content 5-6
5.7 Effect of Solids Loading Rate on Effluent TSS Concentration (a), and TSS Removal Efficiency (b) 5-10

ABBREVIATIONS

%	percent
A/S	air/solids
AADF	average annual daily flow
AAS	air activated sludge
AS	activated sludge
BAF	biological aerated filter
$CBOD_5$	5-day carbonaceous biochemical oxygen demand
CCBA	coordinated chemical bonding and absorption
CEPT	chemically enhanced primary treated
COD	chemical oxygen demand
COP	California Ocean Plan
DAFT	dissolved air flotation thickener
DIT	Densadeg Influent Tank
DO	dissolved oxygen
DOC	dissolved organic carbon
ft^2	square feet
ft^3	cubic feet
gpd	gallons per day
gpm	gallons per minute
HLR	hydraulic loading rate
HRCT	high-rate clarifier/thickener
IBWC	International Boundary Water Commission
IDI	Infilco Degremont, Inc.
lb	pound
lb/ft^2-day	pound per square-foot per day
lb/ft^3-day	pound per cubic-foot per day
ISS	inert suspended solids
MBC	Metropolitan Biosolids Center
Metro System	Metropolitan Sewerage System
mg/L	milligrams per liter
mgd	million gallons per day
mm	millimeters
MM	maximum month
MMF	maximum monthly flow
MWP	Metropolitan Wastewater Plan
NCWRP	North City Water Reclamation Plant
ND	not determined
NOD_5	5-day nitrogenous oxygen demand
NPDES	National Pollutant Discharge Elimination System
NS	not sampled
NTU	nephelometric turbidity unit
O&M	operations and maintenance
OAS	oxygen activated sludge
OLR	organic loading rate
OOS	out of service

OSP	operational set points
OTE	oxygen transfer efficiency
P/C	physical/chemical
$pCBOD_5$	5-day particulate carbonaceous biochemical oxygen demand
PLOO	Point Loma OceanOutfall
PLWTP	Point Loma Wastewater Treatment Plant
PSB	primary sedimentation basin
PWWF	peak wet weather flow
RBC	rotating biological contactors
SANDAG	San Diego Association of Governments
$SBOD_5$	5-day soluble biochemical oxygen demand
SBOO	South Bay Ocean Outfall
SBWRP	South Bay Water Reclamation Plant
scfm	standard cubic feet per minute
SDRWQCB	San Diego Regional Water Quality Control Board
SLR	solids loading rate
SOR	surface overflow rate
SOTE	standard oxygen transfer efficiency
SVI	sludge volume index
$TBOD_5$	5-day total biochemical oxygen demand
TF	trickling filter
TF/SC	trickling filter/solids contact
TKN	Total Kjeldahl Nitrogen
TP	total phosphorus
TS	total solids
TSS	total suspended solids
USEPA	United States Environmental Protection Agency
UV	ultraviolet
UVT	ultraviolet transmittance
VS	volatile solids
VSS	volatile suspended solids

EXECUTIVE SUMMARY

The City of San Diego retained Brown and Caldwell to conduct a pilot test to evaluate the biological aerated filter (BAF) process as a potential means of providing space-effective secondary treatment at the Point Loma Wastewater Treatment Plant (PLWTP). Additionally, the merits of using high-rate clarifier/thickeners (HRCT) were evaluated as a potential replacement of the existing primary sedimentation basins at the plant. This report marks the culmination of the two-phase pilot study and provides the City with the results and findings of the 43-week pilot test. The report's conclusions and recommendations will assist in refining the budgetary cost estimate for increasing the level of treatment at the PLWTP and defining design criteria for the BAF facilities and the HRCT.

Metropolitan Sewerage System and Existing Facilities

The City of San Diego owns and operates the Metropolitan Sewerage System (Metro System). The Metro System serves a 450-square-mile area that includes incorporated areas of the City of San Diego and 15 participating agencies consisting of water/sanitation districts and cities.

Miles of pipelines and many pump stations collect and convey raw wastewater from the service area to one of three treatment facilities:

- North City Water Reclamation Plant (NCWRP)
- South Bay Water Reclamation Plant (SBWRP)
- Point Loma Wastewater Treatment Plant

After receiving coarse screening at Pump Station No. 2, the wastewater arriving at the PLWTP is fine-screened and degritted before coagulants and flocculants are added to more than 58 percent of the incoming 5-day total biochemical oxygen demand ($TBOD_5$) and more than 85 percent of the incoming total suspended solids (TSS) in 12 primary sedimentation basins on an annual average basis. The chemically enhanced primary treated (CEPT) wastewater is discharged to the Pacific Ocean by gravity through the 4.5-mile Point Loma Ocean Outfall (PLOO).

Solids removed at the PLWTP are digested onsite in eight anaerobic digesters before being pumped 17 miles to the Metropolitan Biosolids Center (MBC). Solids from the SBWRP are returned to the Metro System, commingling with the raw wastewater and eventually removed at the PLWTP. Raw and biological solids from the NCWRP are conveyed to the MBC for thickening and anaerobic digestion. The NCWRP digested sludge is mixed with the PLWTP sludge for dewatering. Processed sludge from MBC is currently trucked to an approved landfill and a land application site for final disposal.

Treatment Standards at the PLWTP

The City of San Diego was granted a waiver from secondary treatment standards on November 9, 1995, when the SDRWQCB and the USEPA jointly adopted Order No. 95-106, NPDES Permit No. CA0107409. Order No. 95-106 allowed the City to discharge effluent from Chemically Enhanced Primary Treatment (CEPT) to the Pacific Ocean and established the requirements and limitations for the discharge. The Order was subject to a 5-year review and renewal process. On September 13, 2002, the SDRWQCB and USEPA renewed the waiver, establishing the current effluent standards shown in Table ES.1.

Table ES.1. Current PLWTP Effluent Standards

Parameter	Mean Annual Percent Removal	Mean Monthly Percent Removal	Monthly Average	Annual Mass Emission[(a)]
TSS	N/A	≥ 80%	75 mg/L	15,000 mt/yr
$TBOD_5$	≥ 58%	N/A	N/A	N/A

mt/yr = metric tons per year

(a) Discharge shall not exceed an annual TSS mass emission of 15,000 mt/yr through December 31, 2005. Effective January 1, 2006, the discharge shall not exceed an annual TSS mass emission of 13,599 mt/yr.

Secondary treatment removes most of the organic matter present in the wastewater, which has typically received preliminary and primary treatment (processes that remove floating or settleable solids from the raw wastewater). Current regulations for secondary treated effluent require the concentrations of $TBOD_5$ or 5-day carbonaceous biochemical oxygen demand ($CBOD_5$), and TSS not exceed the values presented in Table ES.2.

Table ES.2. Typical Secondary Treatment Plant Effluent Requirements

Parameter	30-Day Average (mg/L)	7-Day Average (mg/L)
$TBOD_5$	30	45
$CBOD_5$	25	40
TSS	30	45

In addition, at least 85 percent of the TSS in the raw wastewater must also be removed, and the pH cannot fall below 6 nor exceed 9 at any time.

The City was granted a waiver from secondary treatment standards because it demonstrated that discharge of CEPT effluent does not degrade the quality and impact the beneficial uses of the receiving waters. Despite fully complying with its NPDES permit, the City elected to proactively

prepare itself for the potential need to increase treatment at Point Loma by evaluating secondary alternatives that is best suited for the land constrained PLWTP site. Secondary treatment alternatives were initially ranked based on land requirements, capability of meeting secondary treatment standards, proven performance of existing facilities greater than 30 mgd in capacity and more than 5 years in operation, and cost. Biological aerated filtration (BAF) appear to be the best suited for the PLWTP. Although the BAF technology has proven effective throughout the world, larger facilities (>30 mgd) designed for carbonaceous removal only are generally found in colder climates. Sunny San Diego averages about 22° C ambient temperature throughout the year, with wastewater temperatures that range from 20° to 28° C. Lack of performance data on warm climates and the need to evaluate the BAF technology under local conditions and wastewater quality were primary reasons the City invested in a pilot test. The City decided to also test a HCRT system that can provide the CEPT (and possibly thickening) desired, but at a much reduced footprint.

BAF and HCRT

Through extensive evaluation of various secondary treatment alternatives (to be described in a subsequent section), the two most widely used BAF systems (Infilco Degremont's Biofor-C and Krüger's Biostyr) and a HRCT suitable for the PLWTP application (Infilco Degremont's Densadeg) were selected for pilot testing. The systems can provide the necessary treatment at a reduced footprint.

Three alternative configurations, shown in Figure ES.1, are envisioned for incorporating the BAF into the process at the PLWTP:

- Alternative 1 – Use BAF to treat CEPT effluent to secondary level. Recycle backwash to the primary sedimentation basin (PSB) influent channel to co-settle with primary sludge. Pump co-settled sludge to sludge holding tank for subsequent thickening and anaerobic digestion.

- Alternative 2 – Use BAF to treat CEPT effluent to secondary level. Thicken backwash in a HRCT. Recycle the HRCT effluent to the PSB influent channel. Pump thickened solids to the sludge holding tank for subsequent anaerobic digestion.

- Alternative 3 – Replace existing PSBs with HRCTs. Use BAF to treat HRCT effluent. Recycle backwash to the HRCT influent and co-settle BAF backwash solids with primary sludge. Pump thickened solids to the sludge holding tank for subsequent anaerobic digestion.

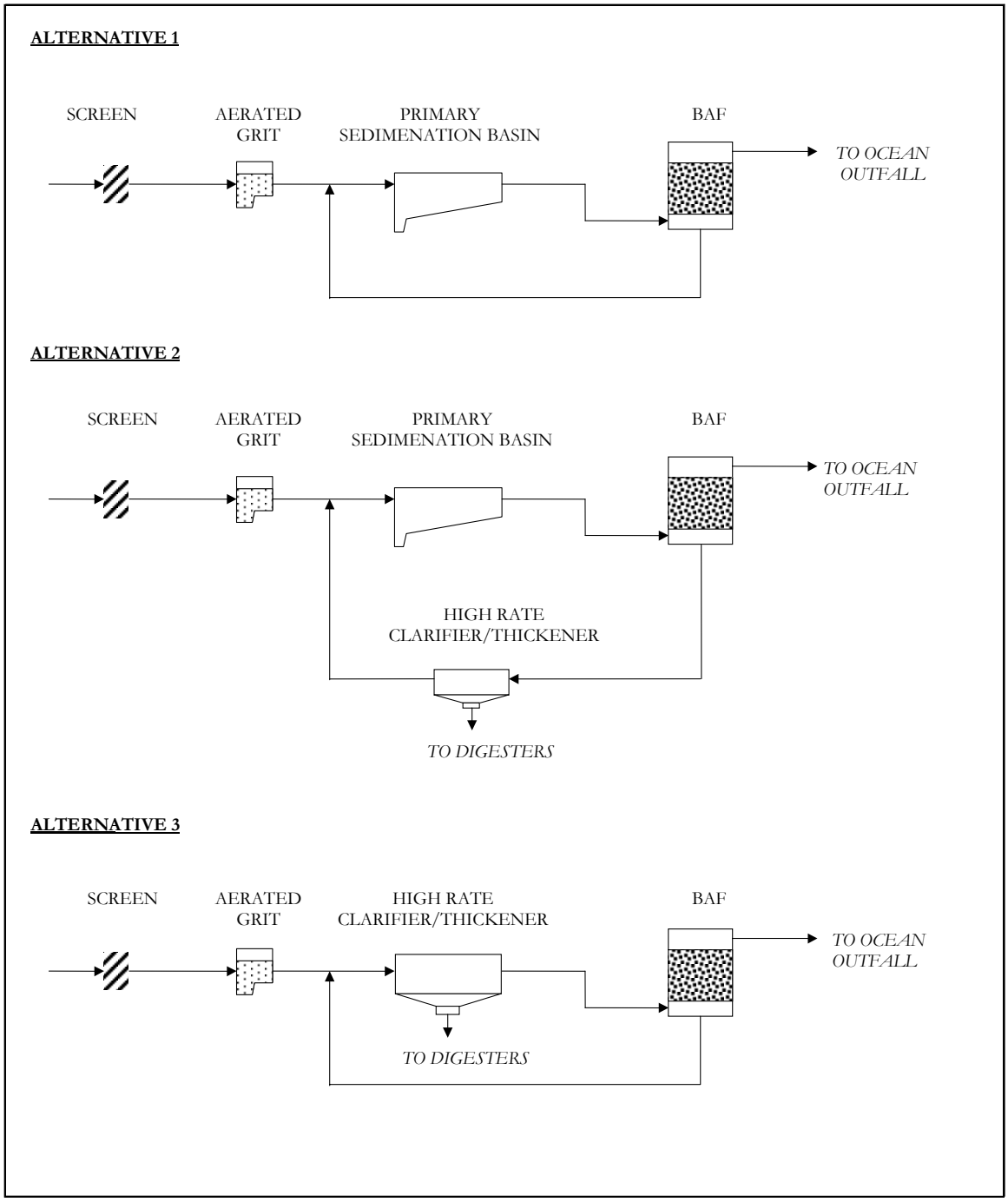

Figure ES.1. Schematic of Alternative PLWTP Configurations that Utilize BAF and High Rate Clarifier/Thickeners

The pilot test was developed to evaluate Alternatives 1 and 3. Because insufficient backwash solids are generated by the BAF pilot units, evaluating the use of the HRCT to thicken the backwash solids was considered infeasible. Under Phase II, however, a lab-scale dissolved air flotation thickener (DAFT) was evaluated for this purpose.

Pilot Test Elements and Objectives

Several elements collectively defined the pilot test, including the following:

- Phase I – Test performance of BAF using CEPT effluent produced at the PLWTP
- Phase II – Test performance of Densadeg (the selected HRCT) and continue testing BAF using Densadeg effluent
- Stress Testing – Test BAF and Densadeg under peak hydraulic loading
- Off-Gas Testing – Determine oxygen transfer efficiency in BAF
- Media Sampling – Sample BAF media to get an idea of biofilm characteristics
- Others Tests
  - ✓ DAFT Feasibility – Determine if DAFT can be used to thicken BAF backwash and co-thicken BAF backwash and primary sludge
  - ✓ NOD Impact – Determine the impact of nitrogen oxygen demand (NOD) on $TBOD_5$ values

Conclusions

The following conclusions were drawn from Phases I and II of the BAF Pilot Test:

- **Need for Biofor-N**

  1. The Biofor-N was operated in Phase I only. After discovering that the Biofor-C effectively produce effluent that meet secondary effluent limits, the operation of the Biofor-N was discontinued. A comparison of the effluent concentrations and the pertinent standards are shown in the table below.

Table ES.3. Comparison of the Effluent Concentrations and the Pertinent Standards

Parameter	Secondary Treatment Standards 30-d Running Average Concentration (mg/L)	Maximum 30-d Running Average Concentration (mg/L)	
		Biofor-C Effluent	Biofor-N Effluent
$TBOD_5$	30	21.0[a]	16.7[a]
$CBOD_5$	25	12.1	8.8
TSS	30	15.9	9.5

(a) Excludes data collected between March 3 and March 19, 2003, a period when Biofor-N was not fully acclimated and produced effluent with very high $TBOD_5$.

- **Compliance with Anticipated Regulatory Standards**

  1. The pilot testing confirmed that the BAF technology is capable of producing secondary treated effluent that meets anticipated discharge requirements. Both units were able to meet the discharge requirements during simulated wet weather and dry weather conditions. There was one exception to this during Phase I, where the Biostyr unit was unable to meet the $TBOD_5$ requirement for the last 30 days of operation because Krüger lowered the aeration rate during this period, causing anaerobic conditions to prevail in certain portions of the column.

  2. The performance of Biostyr and Biofor-C processes did not diminish substantially with the increase in hydraulic, organic, and TSS loading rates over the range tested.

  3. The effluent quality produced by the Biofor-C process was better on average than the Biostyr process.

- **TSS, $TBOD_5$, $CBOD_5$ and NOD**

  1. Although the TSS concentration in the effluent from Biostyr and Biofor-C did not exceed secondary effluent limits, it was found to correlate closely with the ability to meet limits associated with $TBOD_5$.

  2. The warm wastewater temperature in San Diego causes the BAF processes to partially nitrify. The presence of nitrifiers and the corresponding 5-day nitrogen oxygen demand (NOD_5) imparted during the $TBOD_5$ analysis was found to correlate with the amount of TSS in the effluent.

3. The results indicate that meeting the 30-day secondary treatment standard for TSS of 30 mg/L may not equate to meeting the $TBOD_5$ 30-day average limit of 30 mg/L. For both pilot units, the effluent $TBOD_5$ exceeded this limit when TSS reached 30 mg/L. Meanwhile, the $CBOD_5$ concentration is shown to be 10 to 15 mg/L less than the 30-day average limit for $CBOD_5$ of 25 mg/L.

4. Effluent particulate carbonaceous BOD_5 ($pCBOD_5$) is the difference between effluent $CBOD_5$ and effluent soluble $CBOD_5$ ($SCBOD_5$). Dividing $pCBOD_5$ by effluent TSS concentration gives the particulate $pCBOD_5$ to TSS ratio. This number is important in understanding the contribution made by the effluent solids to the effluent $TBOD_5$.

   On average, the effluent TSS contribution to effluent $CBOD_5$ was higher for Biofor-C process (0.29) than for Biostyr (0.23) process. From these average values, the allowable effluent $SCBOD_5$ concentration was estimated for a series of TSS concentrations using the following relationship:

   Allowable $SCBOD_5$ in mg/L = 25 mg/L $CBOD_5$ – ($pCBOD_5$:TSS Ratio) * (TSS)

   The data showed that as the TSS concentration increases in the BAF effluent, the BAF must be capable of treating soluble $CBOD_5$ such that the effluent $SCBOD_5$ cannot exceed 16-18 mg/L under maximum loading conditions. Reducing the effluent TSS concentration, regardless of the TSS effluent limitation, will provide some relief to the needed treatment of $SCBOD_5$.

- **Solids Generation Rate**

1. Solids yields in terms of pound TSS produced per pound $TBOD_5$ removed were higher than expected for both BAF pilot units. Typical values expected for secondary treatment biological systems are 1 pound TSS per pound of $TBOD_5$ removed. The solids were particularly high in Phase II of the testing when the solids yields for the Biostyr and Biofor-C were calculated to be 1.21 and 1.15, respectively.

2. The results also indicated that a statistically valid difference exists between the two pilot units with regard to solids yield.

3. The difference in yields between the two BAFs are believed to be related to the differences in backwashing procedures. The mini-backwashes used in the Biostyr unit have no analog in the Biofor unit. Krüger uses the mini-backwash to clear influent SS that have clogged the first few inches of the media. As a result, some of the influent SS never penetrate the column and are backwashed directly to the backwash tank. Thus, they never have an opportunity to be biodegraded. This raises the measured yield value for the Biostyr unit relative to the Biofor unit.

4. The study results indicate that the full-scale sludge daily production for the Biostyr and Biofor-C processes could be as much as 166,000 and 169,000 lb TSS/day for Biostyr and Biofor-C units, respectively.

- **Backwash**

1. The average backwash to influent flow ratios for the BAFs tested are as follows:

   Biostyr = 0.10 – 0.14
   Biofor-C = 0.07 – 0.08

   While there is a difference in the backwash steps (i.e., water wash, air scour, water drain, etc.) and the duration of each step, the main difference in backwash volumes may be related to the level of automation of the backwash. The Biostyr pilot unit included features that caused a mini-backwash whenever a setpoint pressure drop was detected across the media; it would still undergo a full backwash at a predetermined frequency (e.g., every 24-hour interval for this study). On the other hand, the Biofor-C backwashed only at the pre-set time interval. The additional backwashes that occurred with the Biostyr unit when the column was highly loaded with solids added to the overall backwash volume measured.

2. The inability for the Biofor-C column to backwash automatically when highly loaded with solids led to blower failures. Automatic backwash feature controlled by headloss is highly desirable in order to protect the equipment.

3. The calculated Biostyr backwash air scour rate is 44 percent higher than the value proposed by Krüger based on the average of Phase I and Phase II results. The Biofor-C backwash air scour rate based on the pilot test is 5 percent less than the value proposed by IDI. The scour air requirements are not expected to be a major cost driver, but they influence the proper sizing of blowers.

4. Solids generated by the Biostyr and Biofor-C form an easily separated dense sludge in the Imhoff cone (allowed to settle for 30 minutes).

5. A marked increase in the Sludge Volume Index (SVI) of the backwash water solids occurred between Phase I and II. The difference is most striking for the Biostyr process which went from an average SVI of 30 in Phase I to an SVI of 93 in Phase II. The SVI for the Biofor-C also increased from 36 in Phase I to 67 in Phase II; however, the increase was not as severe as for the Biostyr. The use of the effluent from the Densadeg unit instead of the PLWTP CEPT was the only difference between Phase I and Phase II pilot operation. This may be the cause in changes observed in the backwash solids characteristics. The increase in SVI could be linked to the different polymer type and the higher chemical doses applied when using Densadeg.

6. The sludge and supernatant from the Imhoff cone experiments were tested for several parameters. The following observations were noted:

   - The supernatant average $TBOD_5$ values were roughly 2.5 times greater than the $CBOD_5$ values. In general, the difference between $TBOD_5$ and $CBOD_5$ is caused by nitrogenous oxygen demand.

- The sludge density, measured as total solids (TS) content, varied on average between 0.5 to 2.3 percent in the case of the Biostyr pilot unit and 0.5 to 1.5 percent for the Biofor-C pilot unit.

- The backwash sludge densities decreased from Phase I to Phase II for both BAF pilot units, confirming the changes in SVI. This indicates that a thinner and, perhaps less easily separable sludge particles were produced by the BAFs during Phase II when it was processing effluent from the Densadeg pilot unit.

- The volatile solids (VS) content of the backwash solids decreased substantially between Phase I and Phase II. This would suggest greater loading of inert solids to the BAF units during Phase II than in Phase I. The lower VS content of the backwash solids produced during Phase II is perhaps connected to the higher ferric chloride dose used for the Densadeg unit during Phase II.

- **Stressing the BAF System**

1. Both the Biofor-C and Biostyr processes are robust and able to tolerate shock loading in excess of the design peak-hour Hydraulic Loading Rate (HLR).

2. Although the target HLRs were selected to simulate various scenarios of units out of service, the actual HLR varied from those selected. The result was that the HLR to the Biostyr unit was about 15 percent higher on average than that for the Biofor-C unit. The Biostyr process did not appear to perform poorly despite the higher loading. In fact, it produced effluent with lower TSS and $TBOD_5$ concentrations than for the Biofor-C process when loaded at greater than 5.0 gpm/ft^2. The $CBOD_5$ effluent concentrations at the higher HLRs were all close to 20 mg/L.

3. During the trial, a missed backwash for the Biofor-C led to breakthrough of TSS in the effluent. This did not occur with the Biostyr because the Biostyr SCADA system is programmed to backwash the unit automatically when the column headloss reaches a preset target value. This highlights the importance of automated backwashing controls regardless of which BAF process is ultimately selected.

4. The Biostyr process required considerably more backwash water as a percent of the influent flow than the Biofor-C process. The higher backwash water required implies that higher velocities are required to backwash the Styrofoam media. This could be necessary to free trapped material with specific gravities close to that of the Styrofoam, which presumably could be carried over from the primary clarifiers into the BAF columns. In addition, Krüger staff indicated that the Biostyr process driver for the intermediate mini-backwashes is to clear accumulation of primary solids that tend to form relatively quickly on the bottom of the media column. This material would otherwise cause excessive headloss over the first few inches of the column. This indicates that in general, primary solids do not penetrate substantially into the Biostyr media bed. Analogous conditions for the Biofor-C have not been identified.

5. The amount of filter area that must be in backwash mode (as a percentage of the total filter area) at any time on average was shown to be greater for the Biofor-C process than for the Biostyr process. Therefore, more backup Biofor-C cells are

needed to ensure that there are adequate number of cells in service while cells are backwashing. This is because the Biofor-C (clay media) normally requires more time to backwash than the Biostyr.

- **Feasibility of Using Dissolved Air Flotation Thickening (DAFT)**

  1. Two thickening experiments were performed to determine if DAFT is the appropriate technology for thickening BAF backwash solids. The experiments were as follows:

     - Thickening of the BAF backwash solids alone (i.e., dedicated thickening of BAF backwash solids); and

     - Thickening of the BAF backwash mixed with primary solids (i.e., co-thickening of BAF and primary solids).

  2. Results indicated the following:

     - **Dedicated Thickening of BAF Backwash Water**

       ✓ The sludge removal efficiency was typical for DAFT systems (90 – 95 percent).

       ✓ Sludge TS content obtained in the three trials was substantially lower than the 5.6 percent required to avoid construction of new digesters at PLWTP.

       ✓ To achieve a combined primary and BAF sludge TS content of 5.6 percent, the primary sludge would need to be thickened to 7.1 percent prior to mixing with the DAFT-thickened solids.

       ✓ More analysis is required to either confirm or rule out the feasibility of dedicated DAFT thickening of BAF backwash for PLWTP.

     - **Co-thickening of Blended Primary Sludge and BAF Backwash Water**

       ✓ The sludge removal efficiency was typical for DAFT systems (90 – 95 percent).

       ✓ Sludge TS content obtained in the three trials was marginally in the range needed (i.e., 5.6 percent on average) to avoid construction of new digesters at PLWTP. Based on prior experience with similar sludges, it is likely that with optimization of the float drainage portion of DAFT operation, the desired concentration can be achieved.

- **Thickening Process Recycle Stream Management**

In a full scale BAF system, it may be possible to manage the recycle stream from the solids thickening operation by commingling it with effluent for ocean disposal. The regulatory status of this scheme is uncertain and would require a favorable interpretation of EPA's proposed blending policy. On the other hand, EPA could reject this scheme. In this case, the recycle stream would be managed by recycling it to the CEPT influent tunnel downstream of the existing headworks and grit removal facilities. Assuming a favorable interpretation, this would be an option if the combined effluent stream meets the permit limits. The characteristics of the underflow from the DAFT experiments were used to approximate the results of commingling the recycle stream with the BAF effluent. Some findings are provided below.

1. Under dedicated thickening of the BAF backwash, the effluent TSS and $CBOD_5$ of the underflow and BAF effluent mixture were below the 30-day average permit limits for these parameters. However, the mixture with Biostyr effluent was very close to the TSS limit.

BAF Unit	Effluent Quality Before Thickening Process Recycle Stream Addition (mg/L)	Effluent Quality After Thickening Process Recycle Stream Addition (mg/L)	Effluent 30-d Discharge Limits (mg/L)
Biostyr	$CBOD_5$= 10 TSS= 23	$CBOD_5$= 12 TSS= 29	$CBOD_5$= 25 TSS= 30
Biofor-C	$CBOD_5$= 7.5 TSS= 13	$CBOD_5$= 9 TSS= 17	

2. Under the co-thickening scenario, the underflow is of lower quality such that the mixture of the Biostyr effluent and the underflow exceeds the permit limit for TSS. Combining with a Biofor-C effluent, however, meets the criteria.

BAF Unit	Effluent Quality Before Thickening Process Recycle Stream Addition (mg/L)	Effluent Quality After Thickening Process Recycle Stream Addition (mg/L)	Effluent 30-d Discharge Limits (mg/L)
Biostyr	$CBOD_5$= 10 TSS= 23	$CBOD_5$= 15 TSS= 39	$CBOD_5$= 25 TSS= 30
Biofor-C	$CBOD_5$= 7.5 TSS= 13	$CBOD_5$= 11 TSS= 24	

3. Biostyr effluent quality is not adequate to absorb the recycle stream solids and reliably meet anticipated TSS effluent limit.

4. Biofor-C effluent offers more flexibility in the thickening process selected, i.e., dedicated or co-thickening.

5. High rate filters can be used to remove solids from the recycle stream to improve the feasibility of adding the recycle stream to the BAF effluent for direct discharge to the ocean. This would eliminate the additional hydraulic load imposed by the recycle stream.

- **Oxygen Transfer Efficiency (OTE)**

1. The off-gas test indicated that the oxygen transfer efficiencies in the two units were comparable to typical fine-bubble aeration systems treating similar flows at similar depths.

2. The calculated OTE values for the full-scale Biofor-C and Biostyr units agree with the OTE curve calculated from the off-gas tests. The full-scale aeration airflow reported in each proposal appears reasonable.

- **Air Requirements**

1. Based on the pilot test, full-scale system process air requirement at peak month condition was estimated as 52,457 and 74,560 scfm for Biofor-C and Biostyr, respectively.

2. Maximum day and maximum hour air requirements have not been previously evaluated; this must be performed during preliminary design.

- **Fate of Phosphorus in the BAF**

1. Analysis of BAF influent showed that the average $TBOD_5$ concentration was typically <100 mg/L. Stabilization of this level of $TBOD_5$ requires approximately 1 mg/L phosphorus. The average primary effluent (BAF influent) total phosphorus (TP) concentration during Phase I was 2-3 mg/L, indicating that there should have been sufficient phosphorus nutrient present in the BAF influent flow.

2. Phosphorus occurs typically in soluble and particulate forms in raw sewage. The soluble form—orthophosphate—is readily assimilated by microorganisms. The particulate form requires that the microorganisms hydrolyze it so as to render it biologically available. The average influent soluble orthophosphate concentration was <0.4 mg/L during Phase I (and <0.2 mg/L during the earlier rainy period). The concern was whether this low level of soluble orthophosphate concentration was inhibiting biomass growth. Relatively low dissolved oxygen concentrations measured in the lower reaches of the BAFs suggested that the biofilm may have had pockets of anaerobic activity. Observations of black deposits in the biofilm also indicate anaerobic activity. Biological phosphorus release can be expected to occur in anaerobic environments. It is possible that this mechanism may have contributed sufficient orthophosphate to prevent phosphorus nutrient deficiency from occurring.

- **Bacteria and Virus Removal**

  1. The results indicate that the BAF pilot units provided between a 0.48 and 2.55 Log_{10}-removal of bacteria and between a 0.21 and 0.82 Log_{10}-removal of the coliphage virus.

  2. During Phase I the Biostyr system outperformed Biofor C by providing on average a 2.55 Log_{10}-removal of total coliform as compared to the 0.96 Log_{10}-removal achieved by Biofor C.

  3. During Phase II, however, the Biofor C system performed best. Results of Phase II data show that on average the Biofor C system provided a 1.70 Log_{10}-removal of total coliform as compared to the 1.15 Log_{10}-removal achieved by Biostyr. The data and operational records were carefully reviewed in an effort to ascertain the cause for the reversal. No clear reasons were found.

  4. Bacteria samples taken of the receiving waters indicate that the City has been 100 percent compliant with the requirements of the NPDES permit ever since 1993 with the exception of periods after heavy rainfall when storm water runoff caused the shoreline areas to be out of compliance (this is not in any way related to the discharge from the PLWTP). The BAF pilot test results indicate that the addition of BAF treatment at the PLWTP would further reduce effluent bacteria levels by 0.48 to 2.55 Log_{10}.

- **Toxicity of BAF Effluent from the PLWTP**

  Toxicity of both Biostyr and Biofor-C effluents were below PLWTP NPDES permit limits.

- **Biomass Evaluation**

  1. The microscopic assessment of samples of the spent backwash solids revealed the presence living higher life-forms (e.g., stalked and swimming ciliates, rotifers and worms) in both Biofor-C and Biostyr samples. In general, this is seen as evidence that aerobic conditions prevailed in at least portions of the media beds of these units, although it was likely anaerobic conditions also existed in portions of the units.

  2. The task of obtaining relatively undisturbed samples at discrete depths from each of the pilot columns proved to be difficult. BAF suppliers were not able to supply equipment or methods for this activity and new methods had to be developed during the project. Various sampler designs were considered and all but one failed to produce results. Media samples were only obtainable from the Biostyr pilot unit and not from the Biofor-C unit. Apparently, the lighter, spherical, and relatively smooth Styrofoam media beads were easier to draw up into the sampler than the clay media; which was angular, non-uniform, heavy, and abrasive by comparison. Because of improper seals, the sampling tool also did not allow the differentiation between the loose bound, or interstitial biomas, versus the firmly bound variety.

3. Analyzing the bound fraction of the biomass proved to be challenging as well. Throughout the pilot test, BC attempted several times to obtain a protocol for testing the biomass. Neither vendor had a proven protocol. Based on past experience with other fixed film technologies, a protocol was developed, but was never previously tried or optimized. As a result, the estimates based on the analysis indicated that columns had greater biofilm solids inventories after the units were backwashed than they did before the backwash. Since this is not likely to be the case, these results were regarded as erroneous. Since media sampling and analysis was given a lower priority than all other tests performed during the study, time had expired before another media sampling attempt could be made. It would be desirable to resume this effort if the City decides to resume additional BAF pilot testing in the future.

The following conclusions regarding the Densadeg system are based on Phase II of the study:

- **Densadeg Performance**

1. In general, the existing CEPT system was superior to the Densadeg system for TSS removal but not for $SBOD_5$ and COD removals. CEPT and the Densadeg pilot unit demonstrated similar $TBOD_5$ removals.

Parameter	Average Removal Efficiencies (%)	
	CEPT	Densadeg
TSS	86	81
$TBOD_5$	59	64
$SBOD_5$	7	6
COD	60	68

2. The Densadeg unit produced much thicker sludge than CEPT. Densadeg sludge solids content ranged from 2 to 11 percent; and the solids content of the CEPT sludge varied in the range from 3.3 to 6 percent. Average CEPT and Densadeg sludge solid content was 4 and 7.4 percent, respectively.

- **Impact of De-gritted Raw Wastewater on Performance**

1. Due to concerns that the full-scale Densadeg will receive de-gritted raw wastewater, a small Eutek Teacup Degritting system was installed after a few weeks of Densadeg operation. The data before and after the installation of the grit was statistically compared to determine if the installation made a difference. However, due to several changes made to the operation, such as chemical feed rates, statistical comparison was inconclusive. The data did show, however, that with the grit removal system, the average TSS loading to the Densadeg unit decreased by 20 percent from 41 lb/ft^2-d to 33 lb/ft^2-d on average.

- **Impact of HLR on Performance**

  1. The Densadeg pilot unit was operated at an average HLR of 10.10 gpm/ft^2, which is 98.5 percent of the targeted maximum monthly flow (MMF) condition of 10.25 gpm/ft^2. At this HLR, the average TSS, $TBOD_5$ and $CBOD_5$ removal efficiency achieved by the unit Densadeg was 82, 64, and 54 percent, respectively. Ortho-phosphorus removal in the Densadeg unit was about 95 percent, all by virtue of ferric chloride addition at 40 mg/L.

  2. The results indicated that Densadeg unit at the rate of 10.10 gpm/ft^2 can be used for primary treatment, phosphorus removal, and thickening. However, it required 10 times more polymer and 30% more ferric chloride to achieve nearly the same effluent quality as the existing PLWTP CEPT.

  3. At a HLR of 12.23 gpm/ft^2 (a rate corresponding to 98.6 percent of the full-scale PWWF, or 426 mgd), the average TSS, $TBOD_5$ and $CBOD_5$ removal efficiencies were 84, 61 and 54 percent, respectively. This corresponds to average Densadeg effluent TSS, $TBOD_5$ and $CBOD_5$ concentrations of 47, 90 and 77 mg/L. This performance was achieved at the same ferric chloride, but slightly higher polymer dosage than used during the trials at 10.10 gpm/ft^2 HLR described above.

- **Impact of TSS Loading Rate on Performance**

  The average TSS loading rate applied to Densadeg unit was 33 lb/ft^2-d; the resulting average effluent TSS concentration was 49 mg/L. Increased solids loading does not appear to cause an increase in effluent TSS concentration. The Densadeg unit was able to process a solids loading rate as high as 44 lb/ft^2-d.

- **Effect of Co-Settling on Densadeg Performance**

  According to the two co-settling tests performed, it appears that co-settling of backwash water did not cause an upset in Densadeg unit operation in terms of TSS, $TBOD_5$ and $CBOD_5$. The effluent quality was in the range of normal operation values. Note that this result cannot be interpreted as confirming the practice of co-settling the BAF backwash as a viable option for PLWTP. The only conclusion that can be drawn is that limited recycling of backwash to the Densadeg did not appear to produce upsets. The experiment did not reflect full-scale recycling because there was not enough backwash water produced by the BAF units for a representative experiment. Had the limited backwash experiment shown an upset, then it could have been inferred that upsets would be likely occur in a full-scale system.

- **Operational Requirements**

  1. Densadeg unit required addition of ferric chloride and polymer to enhance the settling characteristics of the raw wastewater.

  2. Ferric Chloride. Target ferric addition at the Densadeg unit was 40 mg per liter of wastewater both at HLR of 10.25 and 12.4 gpm/ft^2. Actual ferric consumption was

monitored daily. According to readings, actual ferric consumption at the Densadeg unit was about 42 mg/L.

3. Polymer. At a HLR of 10.25 gpm/ft^2, the actual active polymer consumption was about 1.3 mg/L.

4. Sludge Blanket Level. A constant sludge blanket level needs to be maintained for steady state Densadeg performance. The target sludge blanket level was 3 to 4 feet for the Densadeg pilot unit. Sludge wasting rate needs to be adjusted depending on the incoming wastewater quality to achieve the target sludge blanket level.

5. Solids Wasting Rate. Sludge wasting rate was adjusted manually to achieve the target sludge blanket level at the Densadeg pilot unit. Sometimes sludge blanket level dropped to as low as 1 foot due to operational problems. In these instances, sludge wastage was minimized to build up enough sludge level in Densadeg unit. Time between sludge blowdown events ranged in between 0.2 to 10 hours. It was 0.6 hours on average. Sludge wastage lasted 34 seconds on average, although it varied in between 5 to 60 seconds.

6. The Densadeg system appeared to be more sensitive to diurnal and seasonal (wet weather) changes in wastewater characteristics than the existing CEPT process, leading to frequent process upsets. Some of these would, perhaps, have been mitigated if the pilot unit were equipped with automated process controls.

7. In a full-scale application of the Densadeg at PLWTP, the pilot test experience suggests it is critical to include an automated chemical feed system. Such an automated system should be flow-paced and perhaps solids mass-flow paced using online measurement of suspended solids content.

8. Automated controls to vary wasting rate based on sludge blanket depth is important to consistent performance. IDI indicated that full-scale systems include sonic sludge blanket level sensors used to control sludge blanket level. It is not clear how the entire balance of process components described above would be automated to reduce the need for constant operator attention. Under the best circumstances, a highly skilled instrumentation and controls team would be needed to maintain the control components.

- **Cost Implications of Study Results**

In June 2003, BC submitted a draft report assessing the feasibility and requirements of upgrading the PLWTP with BAF secondary treatment. This report included the preliminary design proposals that were generated by the manufacturers. The design was based on the vendor's standard performance assumptions. Site-specific pilot trials on the PLWTP wastewater had not been performed at the time of the vendor's proposals. Budget level cost estimates were prepared and presented in that report pending verification of process performance through pilot testing. Listed below are impacts of the pilot study findings on the earlier costs estimates.

Regardless of the pilot study results, recent escalation of material costs—primarily the costs of steel, fuel, and concrete—will likely increase the capital cost required for the proposed BAF and solids handling facilities above what was estimated previously in 2003. BC therefore recommends new cost estimates to be calculated as part of a preliminary design effort should the City go forward with plans to provide full secondary treatment at PLWTP.

1. **Impacts on Capital Cost Estimates**

- In general, each of the BAF pilot unit met performance requirements under simulated hydraulic and organic loading conditions mentioned above. Therefore, design loading assumptions that formed the basis of facility sizing in the original full-scale proposals were verified. Moreover, the results indicate that the proposed media column height for Biostyr could even be reduced without compromising the ability to meet regulatory limits, even at peak hydraulic loading conditions.

- The estimates for the Biofor system must be adjusted to reflect the need for a single stage system only, i.e., the Biofor-N stage is not need to meet the anticipated secondary treatment standards.

- Although the pilot test validated the assumptions leading to the earlier cost estimates, recent escalation of material costs will likely increase the capital cost required for the proposed BAF facilities above that which was previously estimated

- The reasons for the higher solids yield for the BAF processes tested are believed to be related to the post precipitation of iron compounds. It is prudent to plan and develop budget level cost estimates based on the pilot study results to avoid the potential shortfall in land and funding should the actual yield be accurately depicted by the level derived from the pilot study. During predesign, agencies operating full-scale facilities could be contacted for data to determine if similar yield rates are observed. The cost estimates could then be refined at that stage.

- The results of the Densadeg pilot testing confirmed that the design hydraulic loadings used in the earlier design proposal by IDI were valid for the Densadeg design. However, it was learned that the complexity and potential sensitivity of the Densadeg to fluctuations in wastewater quality may not be suitable for full-scale application at PLWT given the relatively simplicity and effectiveness of the existing CEPT process. Should the City be inclined to replace CEPT with Densadeg in the future as a space saving measure, the capital costs estimated in the earlier proposal and feasibility report for the Densadeg appear to be valid based on the pilot test results.

2. **Impact on O&M Cost Estimates**

- Estimates related to the Biofor system must be adjusted to reflect the need for a single stage system only, i.e., the O&M costs related to the Biofor-N must be eliminated.

- In general, the results confirmed the oxygen transfer efficiencies and aeration rates on which the earlier preliminary proposals and feasibility study costs were based. However, peak day and peak hour requirements were neither proposed by the vendors nor estimated during this report. Likewise, the quantities of spent backwash produced by the two units during the pilot testing were similar to the amount predicted by the Krüger in their preliminary design proposal. IDI did not estimate backwash flows in their earlier proposal, however, the pilot test results suggest the Biofor-C and Biostyr are roughly equal in this regard. Therefore, the BAF budget level O&M costs presented earlier are still valid.

- Earlier cost estimates for the Densadeg process were based on CEPT experience. The pilot testing revealed that this assumption was not valid and that the Densadeg required higher doses of ferric chloride and polymer to provide similar solids removal efficiency as the existing CEPT. The polymer and ferric chloride dosages were as much as 10 and 1.3 times, respectively, higher than the dose of the existing CEPT during the same period. Therefore, the Densadeg O&M costs must be revised upward accordingly if this alternative is to be given further consideration.

Recommendations

The following investigations should be implemented to further evaluate the potential of BAF to provide full secondary treatment at PLWTP:

- **BAF**

1. **Automation of the BAF** - The BAF pilot study experience suggested that proper automation of the BAF process is essential to the systems consistent compliance with anticipated regulatory limits. This was exemplified during stress testing when the lack of automation on the Biofor-C unit led to a missed backwash, blower failure and subsequent TSS breakthrough. BC recommends surveying municipalities that operate full scale BAF facilities to investigate the types of automated control strategies in use at these installations as well as the historical success and failure rates associated with these strategies.

2. **Addition of Media Pressure Sensors** - During the pilot testing, the use of pressure sensors at intermediate depths in the media bed proved to be a good diagnostic tool for understanding the buildup of pressure within the columns. This type of intermediate pressure monitoring would be of value in a full-scale system as well. A cost/benefit analysis of such a system is advisable should the City pursue construction of a full-scale BAF system.

3. **Media Sampling and Testing** – Media sampling was intended to provide the insight into the BAF biomass characteristics that would be useful, both from the perspective of process control and to explain the differences in performance of different types of media and process configurations. The suppliers were not able to provide techniques for sampling, so they had to be developed during the pilot

project and only limited success was achieved only late in the program. The limited results obtained were indeed valuable. It is recommended that media sampling experiments be conducted at existing BAF facilities so that permanent facilities can be incorporated into the full-scale design.

- **Solids Processing**

1. **Re-evaluation of Solids Processing Strategies** - The solids generation that was measured during the pilot test was higher than previously assumed. Therefore, solids process alternatives for the full-scale design should be re-evaluated including evaluation of the sufficiency of available digester capacity related to the solids generation rates measured during the pilot testing. New cost estimates should also reflect the increased solids generation.

2. **Evaluation of Thickening Alternatives** - Limited thickening experiments were conducted during the pilot study (e.g., bench scale DAFT and limited co-settling experiments). However, these were not the comprehensive solids processing studies that should be conducted prior to full-scale design. Therefore, additional solids process pilot testing is recommended considering the importance of the solids component in the full-scale design and associated costs. Such pilot testing might include arranging for trailer mounted units (e.g., centrifuge, gravity belt thickeners, DAFTs, etc.) to be tested at an existing BAF installation employing CEPT. Failing this, the testing completed to date are believed to be sufficient to prove the viability of DAFT technology for use as a co-thickening device, as the results obtained are similar to those obtained at other sites with co-thickening of raw and biological sludges.

3. **Management of Thickening Process Recycle Stream** – Evaluate the use of high rate filters to remove solids from the thickening process recycle stream. The pilot test data indicate that removal of such solids will enable commingling of the filtered recycle stream with the BAF effluent for ocean outfall discharge while complying with anticipated secondary treatment standards.

- **High Rate Clarification/Thickening (HRCT)**

1. **Densadeg Re-test –** It was observed during visits to full-scale HRCT systems in Minnesota and Europe that such systems provided compact primary clarification and consistent performance. HRCT provides the necessary primary treatment at a reduced footprint – a key advantage if space is limited. The pilot testing of the Densadeg was inconclusive with regard to feasibility of a full-scale system. This was due to the many process upsets that were encountered during the pilot testing. IDI has indicated that these problems would have been avoided if the process automation used on full-scale Densadeg installations were available for the pilot scale unit. If IDI can reconfigure a Densadeg pilot unit with the same automated controls and solids inventory control features that are standard on full-scale systems, it would be worth pilot testing that unit again to better evaluate the process for PLWTP.

2. **Densadeg as a Thickener** - The Densadeg exhibited the ability to produce sludges with up to 11 percent total solids content. Therefore, it would be worth pilot testing Densadeg as a thickening device at a full-scale BAF facility employing CEPT. For this test to be useful, the climatic conditions would have to similar to those prevailing in San Diego.

- **Other Technologies**

1. **Evaluation of Other Emerging Secondary Treatment Technologies for Constrained Sites** - In addition, the City should continue to track emerging compact treatment technology including some of those listed in Appendix A (e.g., membrane bioreactors, moving bed biofilm reactors, integrated fixed film activated sludge, and submerged biological contactors). Emerging companies supplying alternative BAF systems at large plants should also be sought and tracked. Tours to existing full-scale installations of these technologies are also worth pursuing. Continuing to develop a solid base of understanding of new technologies is the best way to keep a variety of options open to the City as it moves forward with planning for a full-secondary treatment system at the PLWTP. Pilot testing of new technology (such as those listed in Appendix A) should be considered when practical.

2. **Pilot Testing of Evaluation of Disinfection Technologies** - Since pathogen removal could become an important consideration in the future both in terms of public perceptions and as a regulatory requirement, additional evaluations of the efficacy of disinfection technologies such as UV on BAF effluent should be conducted.

- **Cost Estimates**

Re-evaluation of Cost Estimates – The cost estimates should be re-evaluated in light of the pilot test results and the increased material costs that have manifested since the last cost estimate. Prior to the cost estimates, solids processing alternatives should be re-evaluated given the results of the pilot testing. Further, the land acquisition issue should be resolved, and a preliminary geotechnical investigation should be performed.

- **Permitting**

$CBOD_5$ Permit Limit - To protect the City from analytical or operational problems that cause NOD_5 to be exerted within the five day BOD test upon committing to secondary treatment for all or part of the flow to the PLWTP, permit applications should be for $CBOD_5$ rather than $TBOD_5$.