APPENDIX B

PROCESS FLOW DIAGRAMS

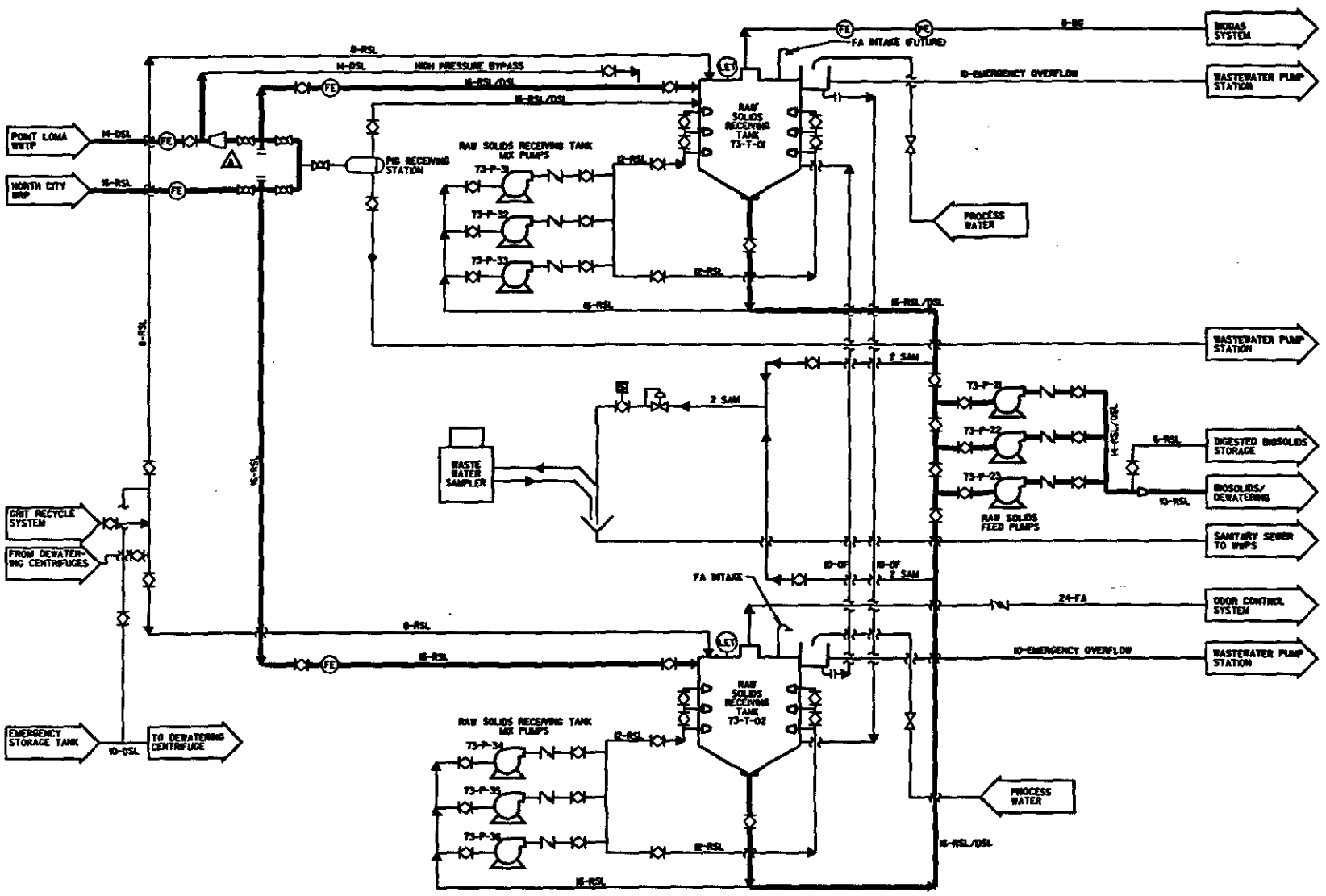

FIGURE 1
PROCESS FLOW DIAGRAM
RAW SOLIDS RECEIVING/STORAGE

R:\mbc-camp\figure1.dgn
06-OCT-2006 08:36
dbraves

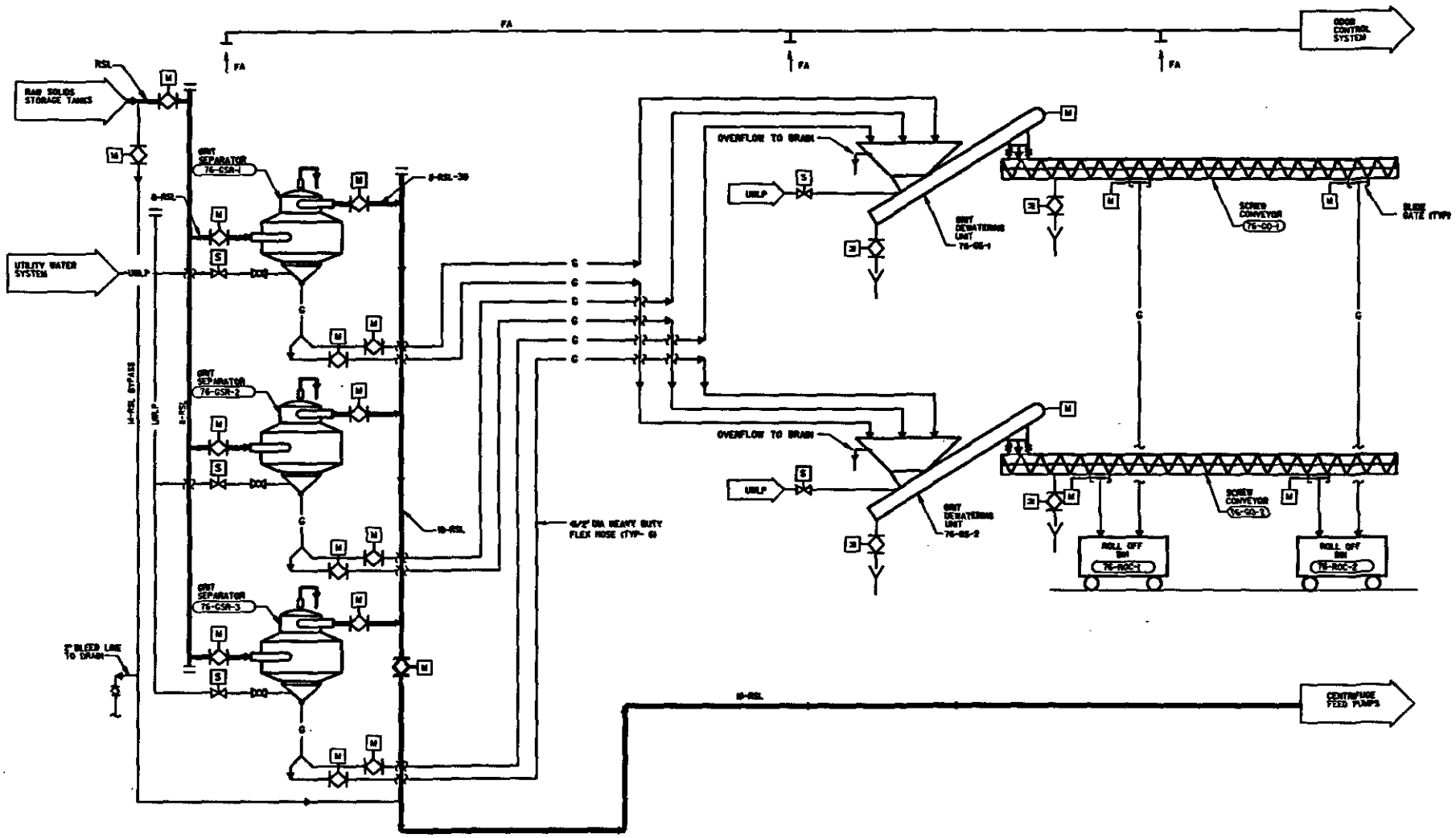

FIGURE 2

PROCESS FLOW DIAGRAM
GRIT REMOVAL

R:\mbc-camp\figure2.dgn
05-OCT-2005 08:36 cbravo

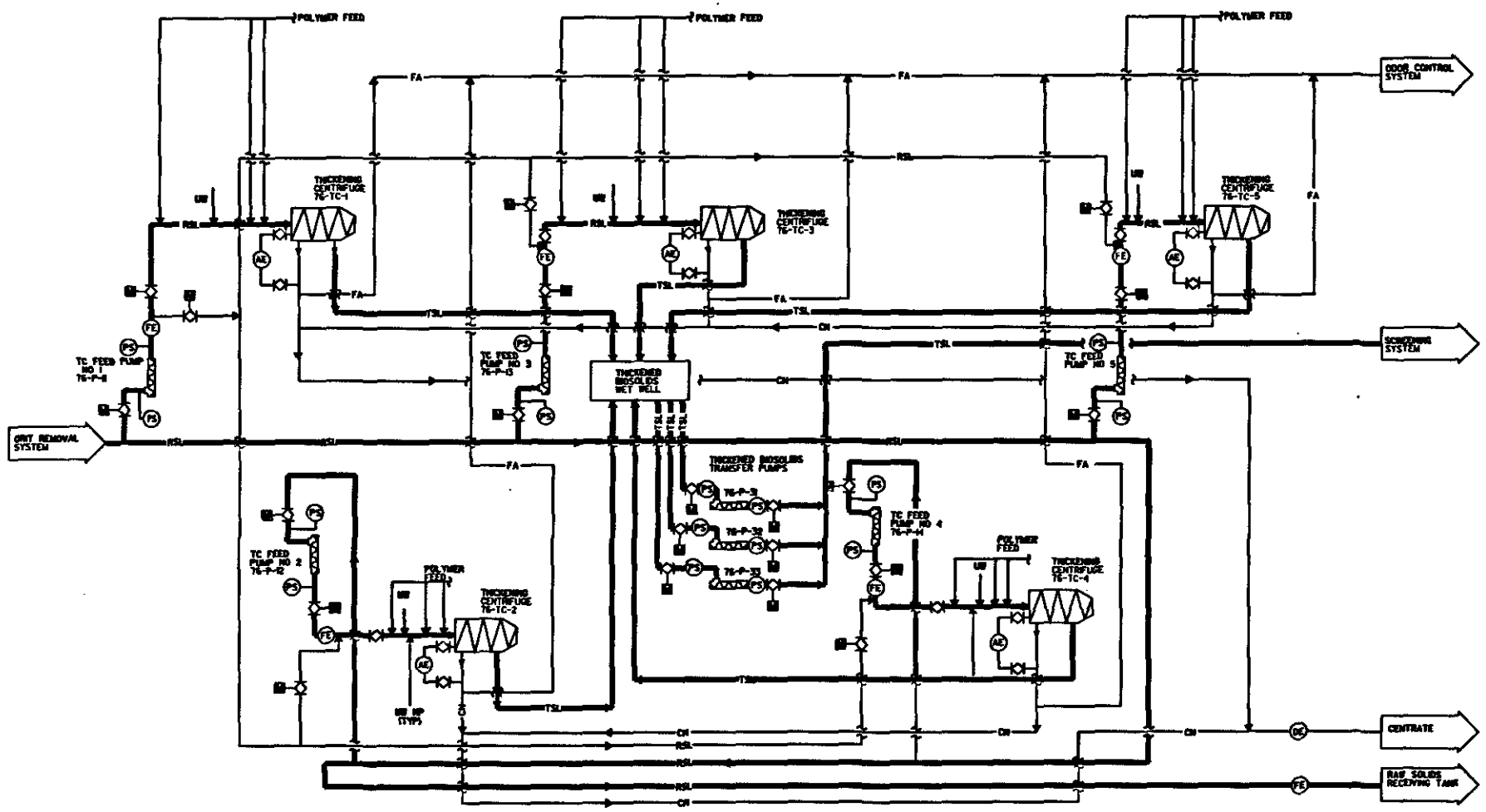

FIGURE 3

PROCESS FLOW DIAGRAM
BIOSOILDS THICKENING

R:\mbe-camp\figure3.dgn
05-OCT-2005 08:38 cbravo

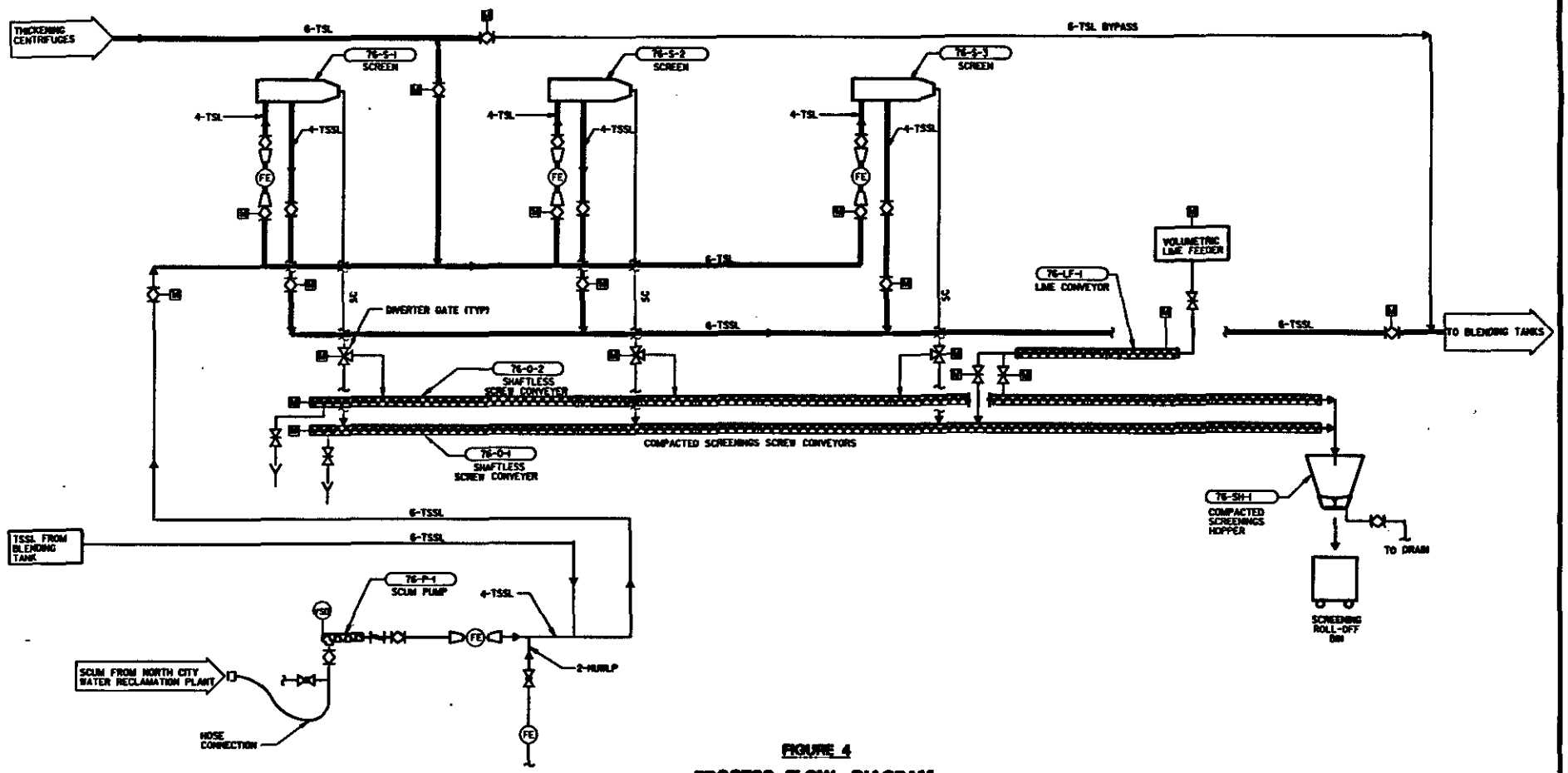

FIGURE 4

PROCESS FLOW DIAGRAM
BIOSOLIDS SCREENING

R:\mbo-camp\figure4.dgn
05-OCT-2006 08:39
cbravo

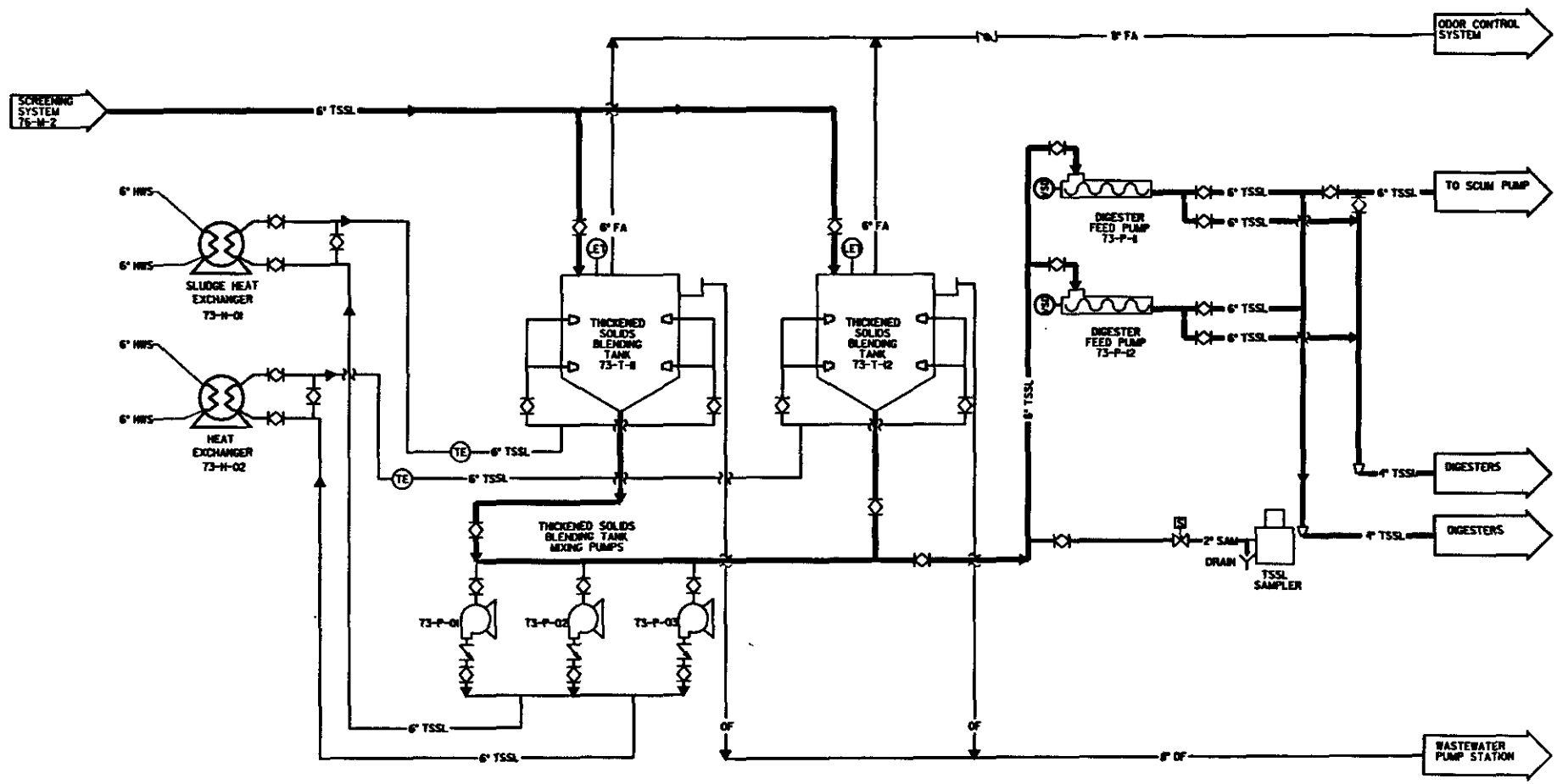

FIGURE 5

PROCESS FLOW DIAGRAM
THICKENED SOLIDS BLENDING STORAGE

R:\mbo-camp\figure5.dgn
05-OCT-2006 08:38 cbravo

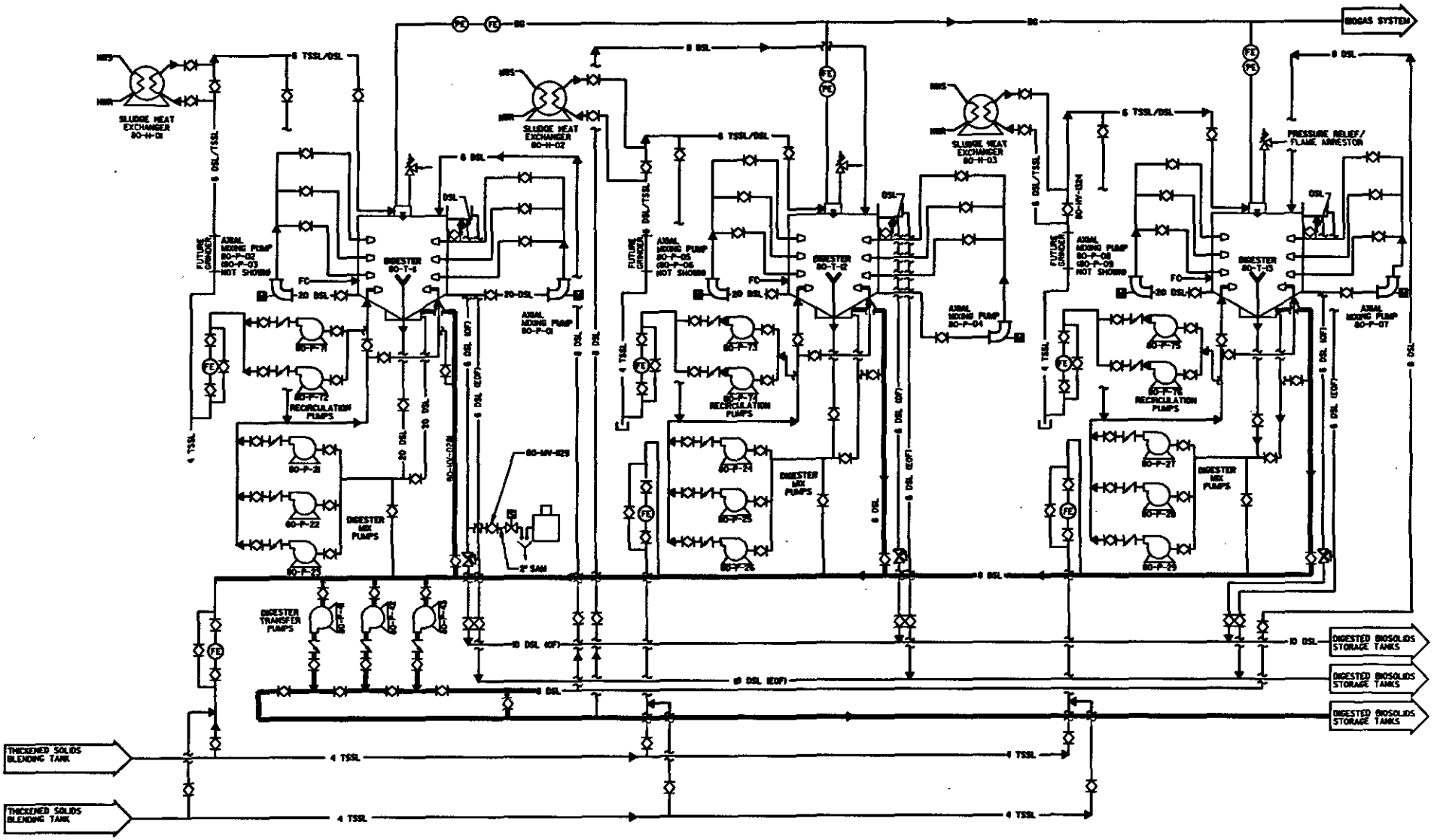

FIGURE 6

PROCESS FLOW DIAGRAM
ANAEROBIC DIGESTION

R:\mbo-camp\figure6.dgn
05-OCT-2006 08:40 obravo

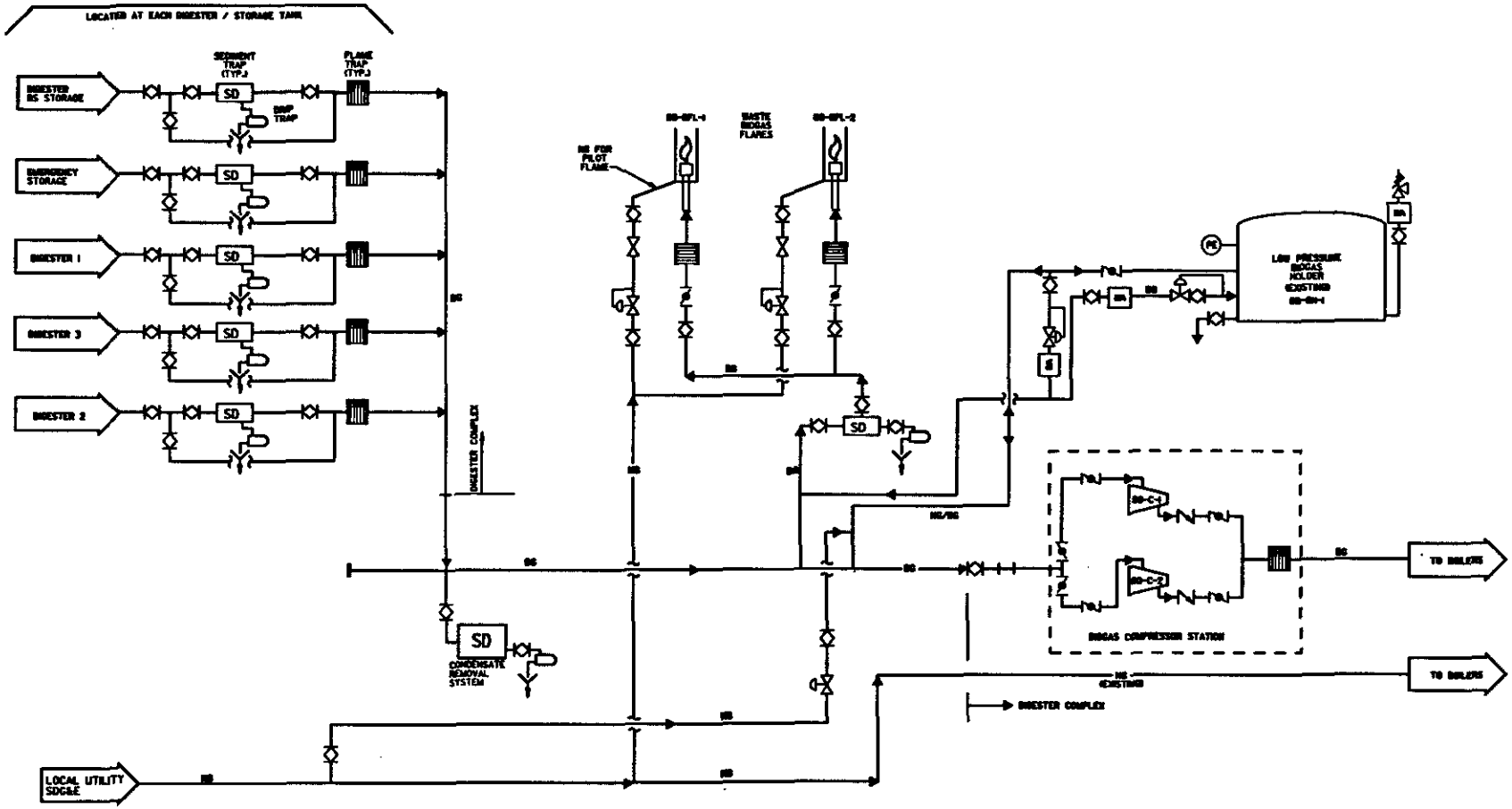

FIGURE 7
PROCESS FLOW DIAGRAM
BIOGAS COMPRESSORS & FLARES

R:\mbc-camp\figure7.dgn
05-OCT-2006 08:40
abravo

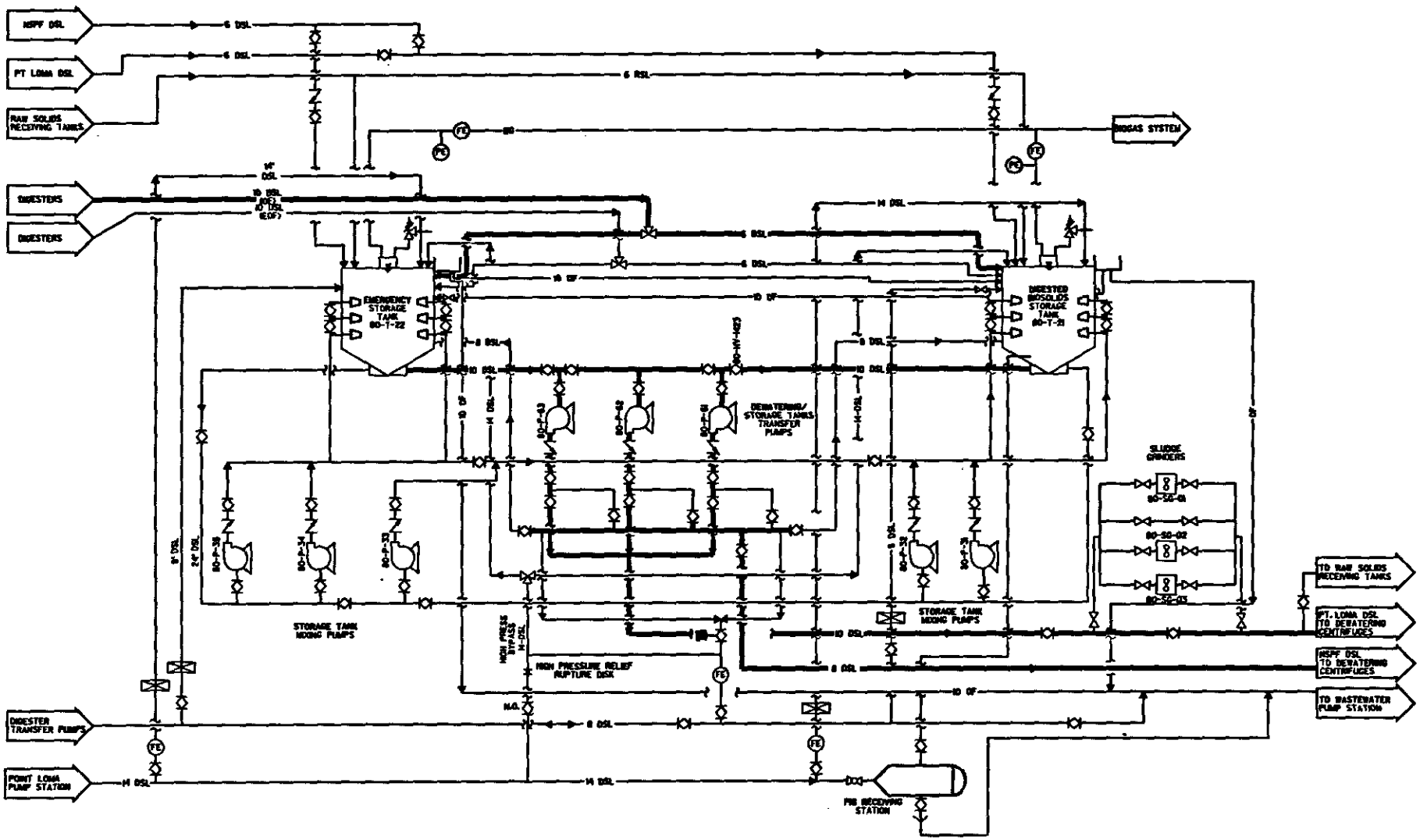

FIGURE 8
PROCESS FLOW DIAGRAM
DIGESTED BIOSOLIDS STORAGE

R:\mbe-camp\figure8.dgn
05-OCT-2008 08:41
cbreve

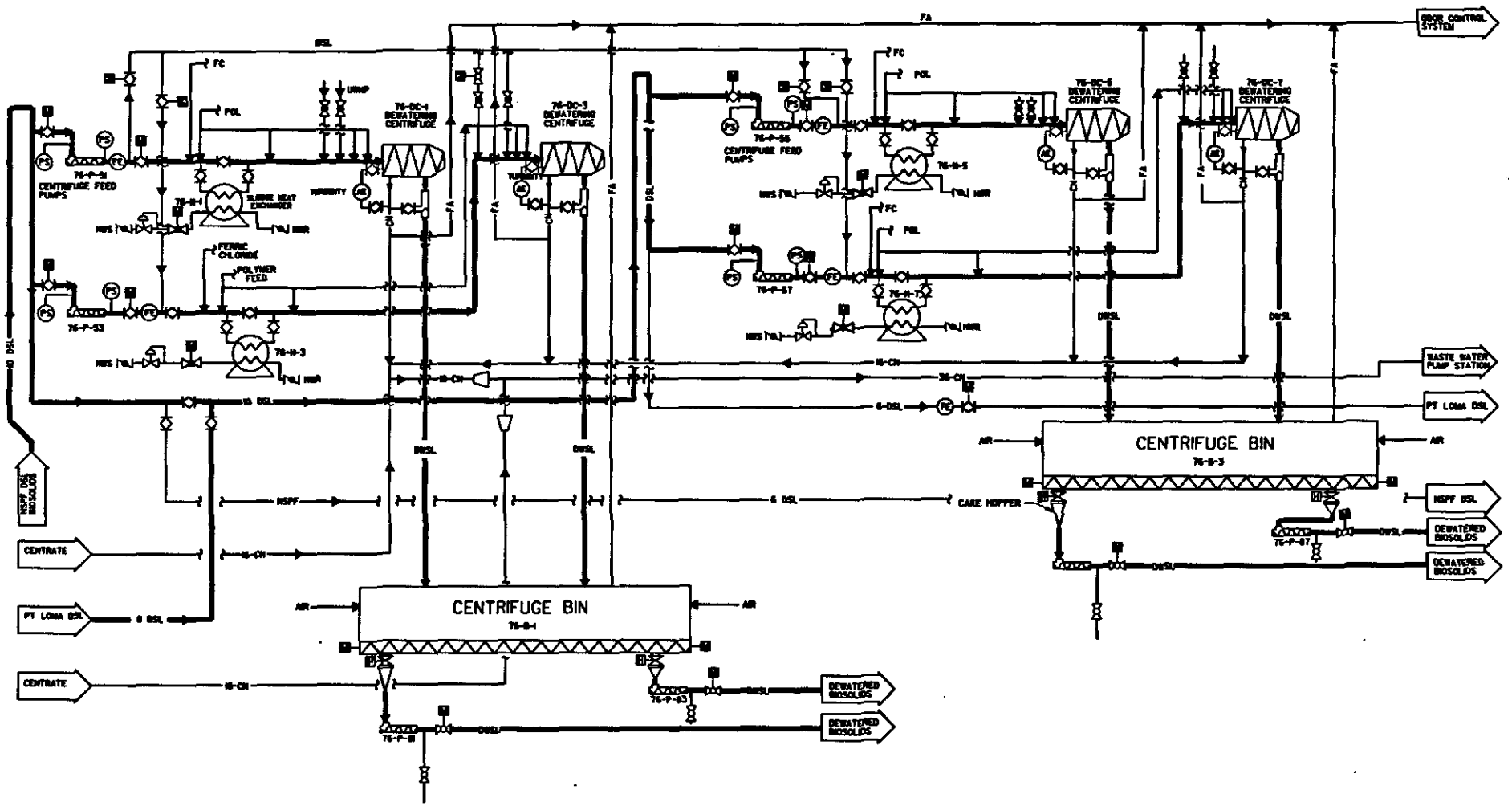

FIGURE 9

PROCESS FLOW DIAGRAM
DEWATERING

R:\mbc-camp\figure9.dgn
05-OCT-2006 08:41
cbravo

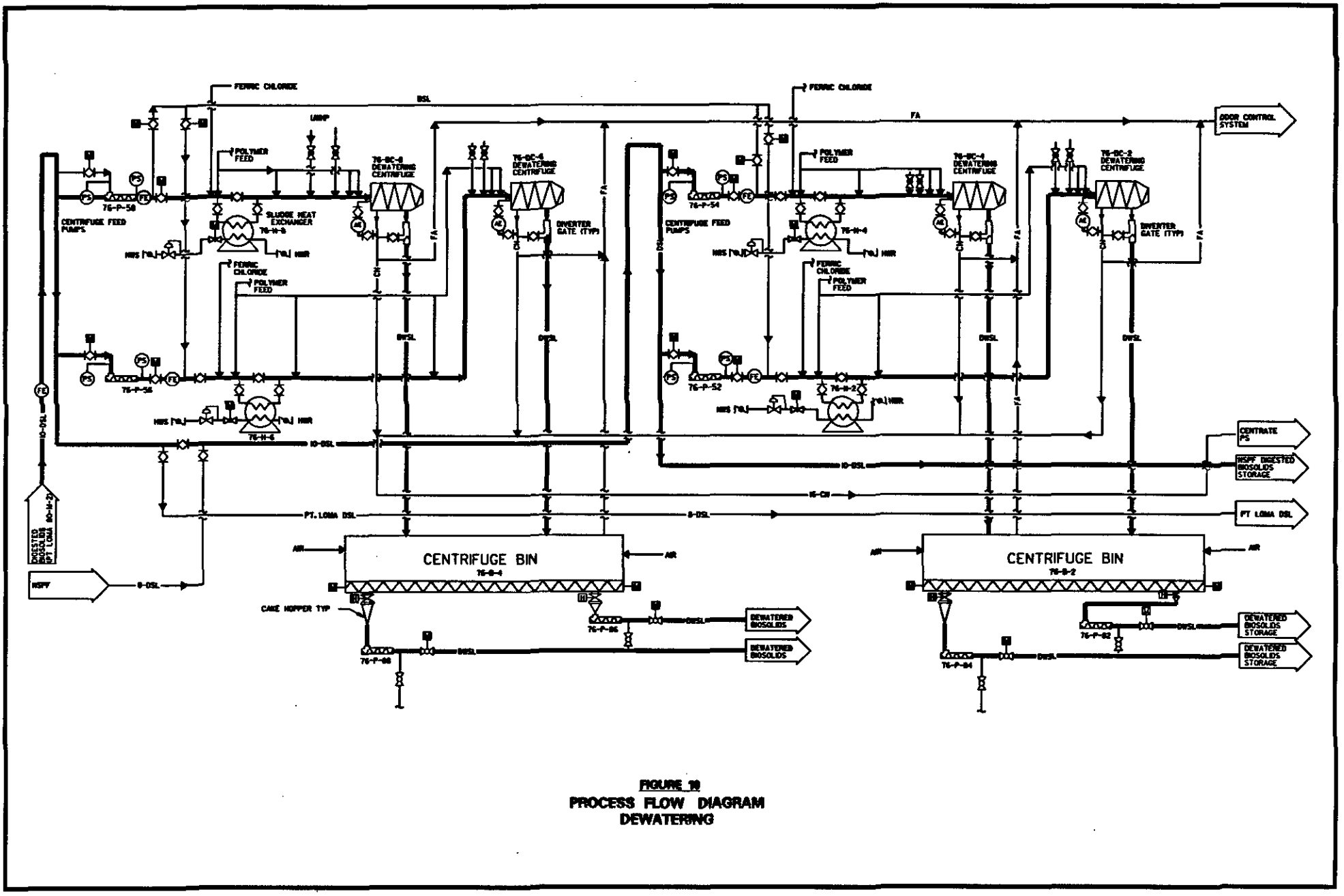

FIGURE 10
PROCESS FLOW DIAGRAM
DEWATERING

R:\mbs-samp\figure10.dgn
05-OCT-2006 08:42
cbrown

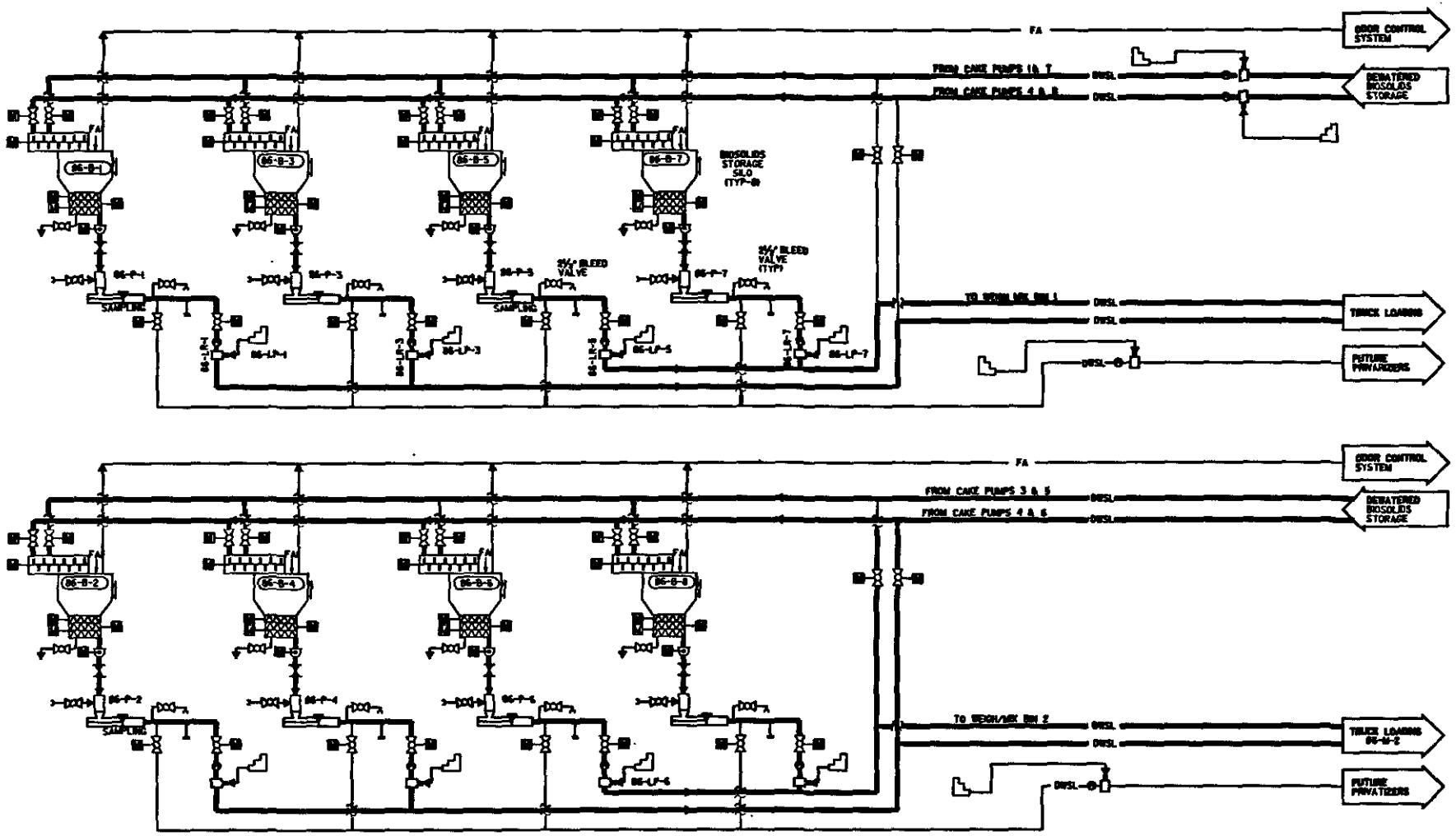

FIGURE 11

PROCESS FLOW DIAGRAM
DEWATERING BIOSOLIDS STORAGE

R:\mbo-camp\figure11.dgn
05-OCT-2006 08:42
cbravo

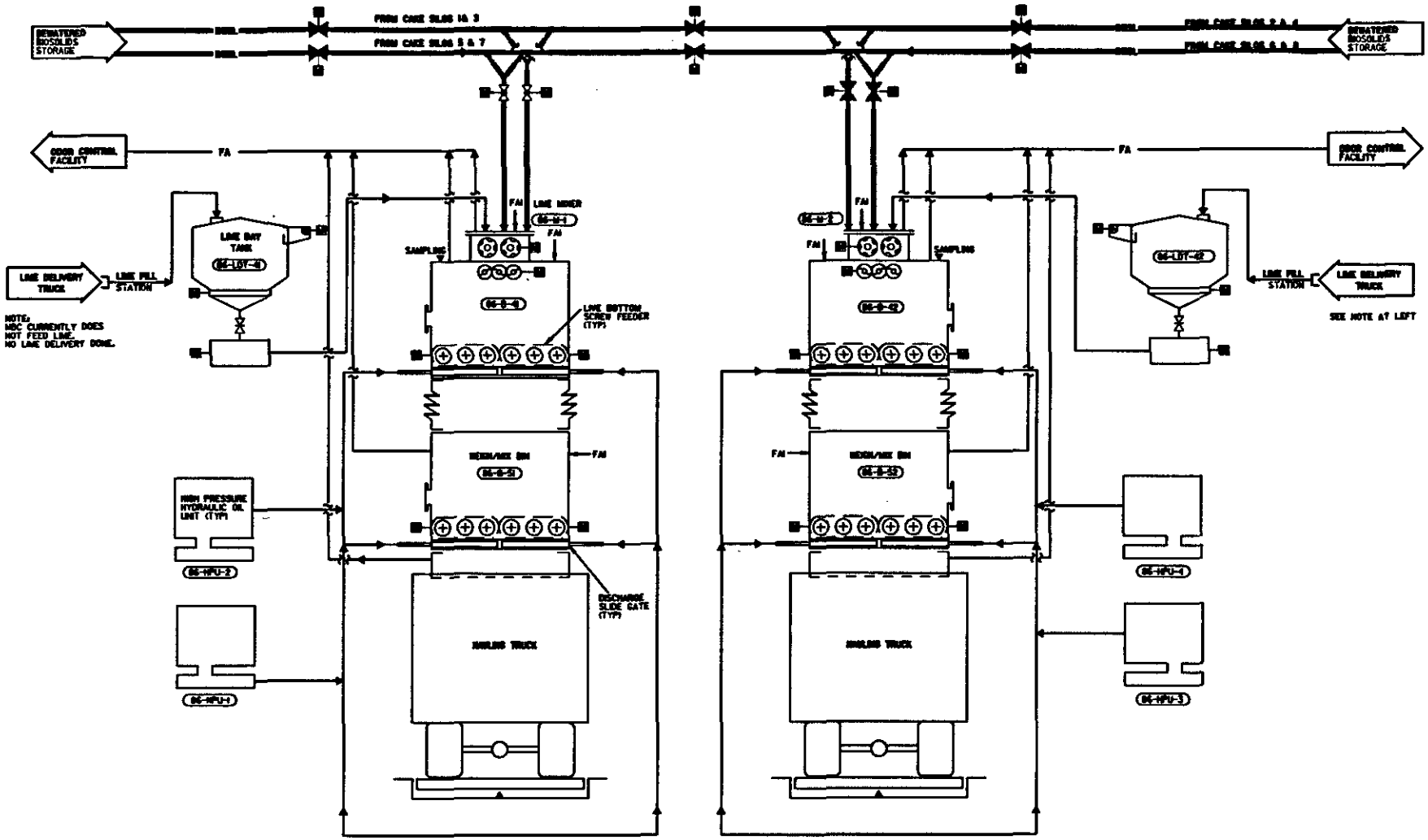

FIGURE 12

PROCESS FLOW DIAGRAM
DEWATERED BIOSOLIDS LOADOUT

R:\mbc-camp\figure12.dgn
05-OCT-2005 08:43
abreve

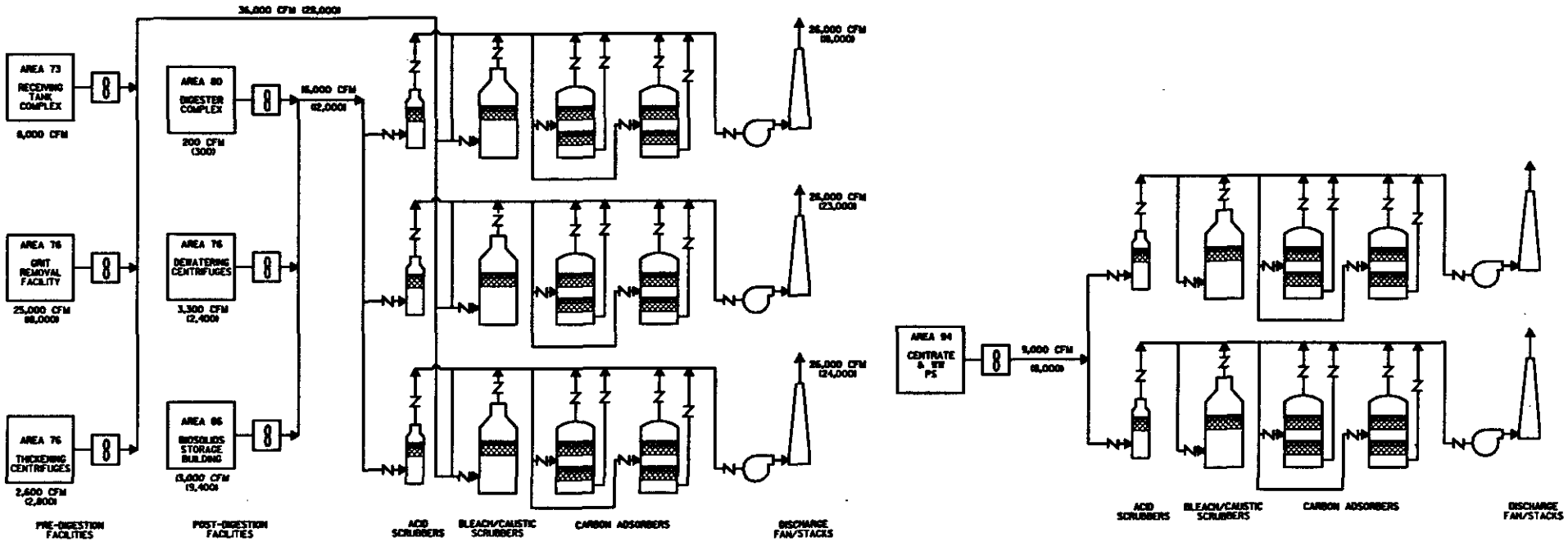

AREAS 80, 73, 76, 80, & 86

(2 DUTY + 1STANDBY ODOR CONTROL SYSTEMS)

AREA 94

(DUTY + 1STANDBY ODOR CONTROL SYSTEMS)

NOTES:

1. REFERENCE: 'MBC AIR BALANCE SUMMARY FINAL TM' BY B&C, FIGURES 1& 2, NOVEMBER 2003.
2. AIR CFMS SHOWN ARE DESIGN & (ACTUAL)

FIGURE 19

MBC ODOR CONTROL FOUL AIR FLOW DIAGRAMS

R:\mbc-camp\figure19.dgn
05-OCT-2005 08:43
cbravo

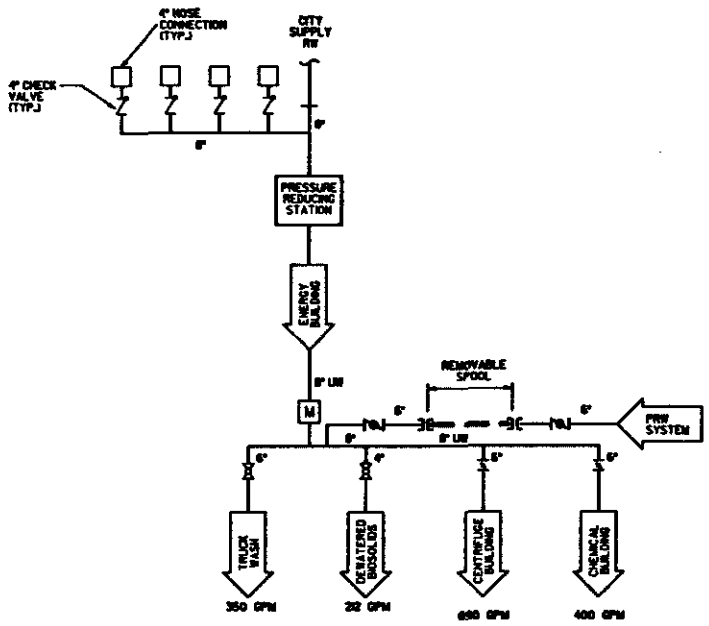

FIGURE 14

UTILITY WATER LOW PRESSURE (UWLP) SYSTEM
FLOW DIAGRAM

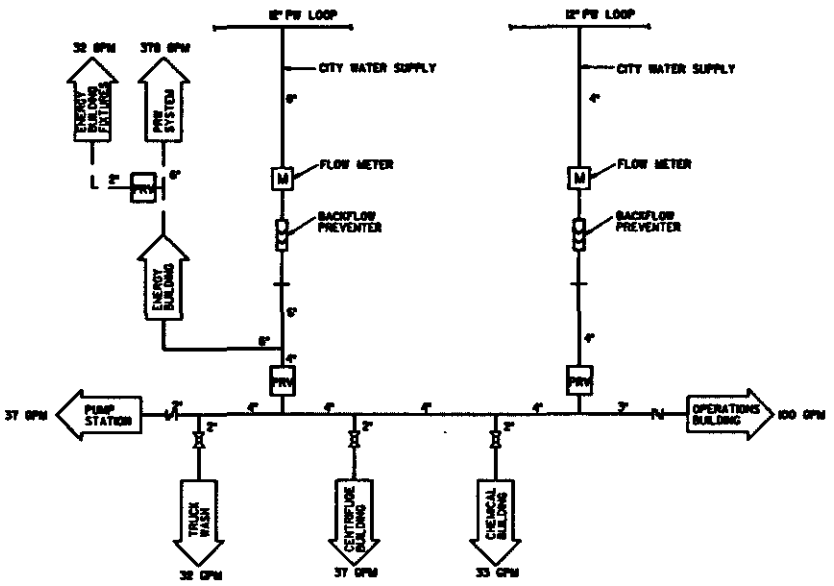

FIGURE 15

POTABLE WATER (PW) SYSTEM
FLOW DIAGRAM

R:\mbo-camp\figure14-15.dgn
05-OCT-2005 08:44
sbravo

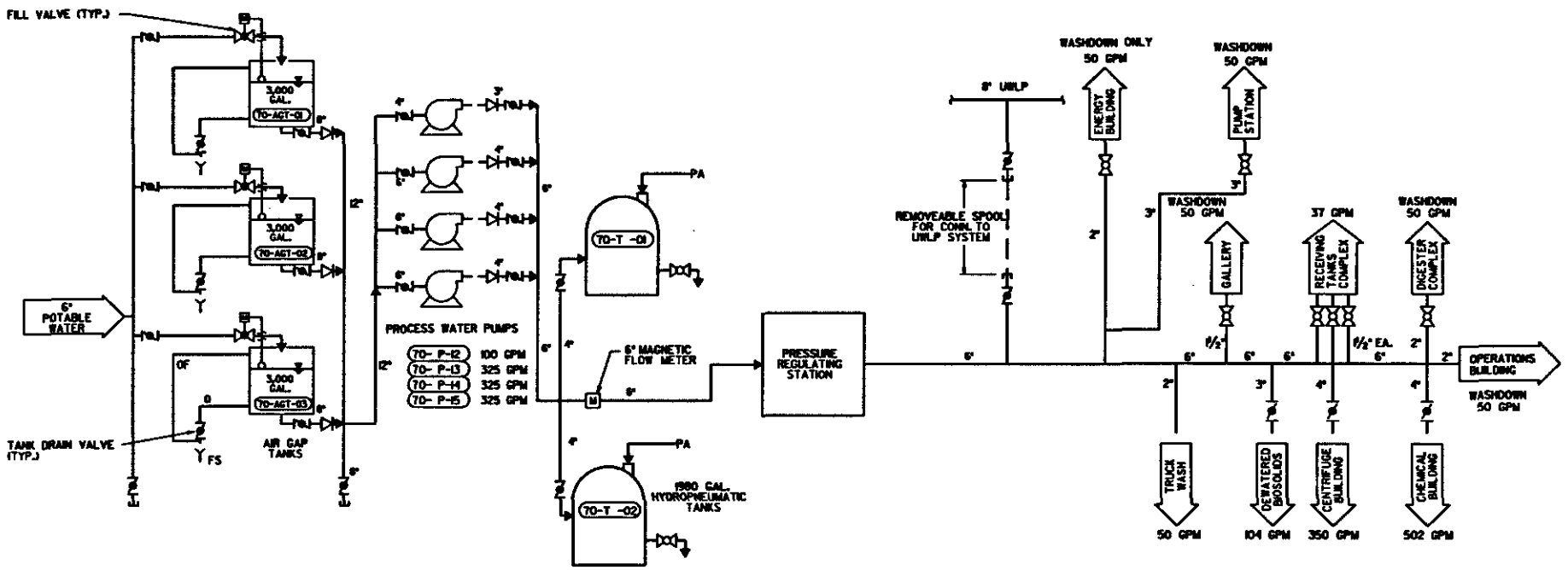

FIGURE 16

PROCESS WATER (PRW) SYSTEM
FLOW DIAGRAM

R:\mbe-camp\figure16.dgn
05-OCT-2008 08:44
abreve

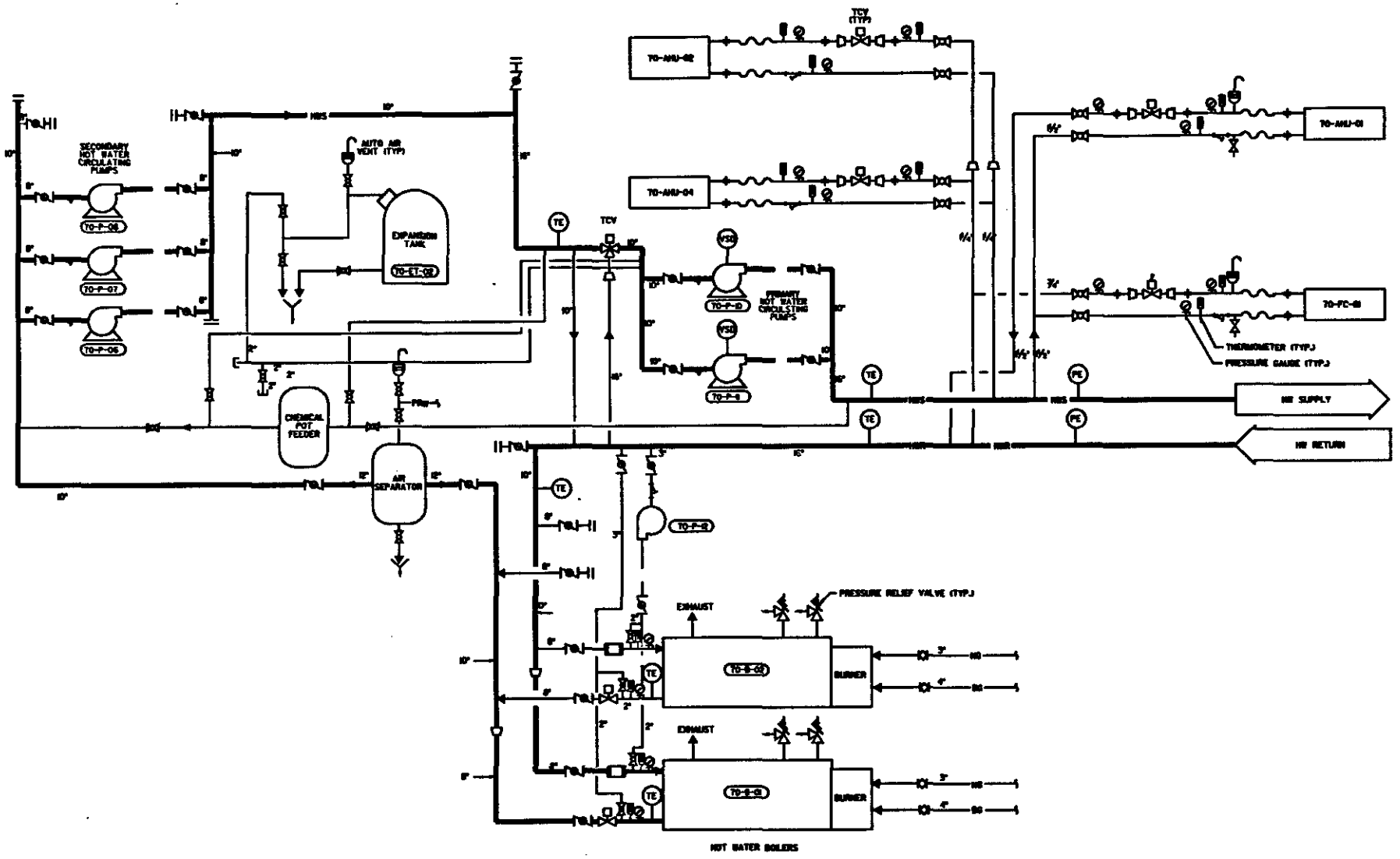

FIGURE 17

HEATING HOT WATER SYSTEM
FLOW DIAGRAM

R:\mbo-camp\figure17.dgn
08-OCT-2006 08:48 cbrave

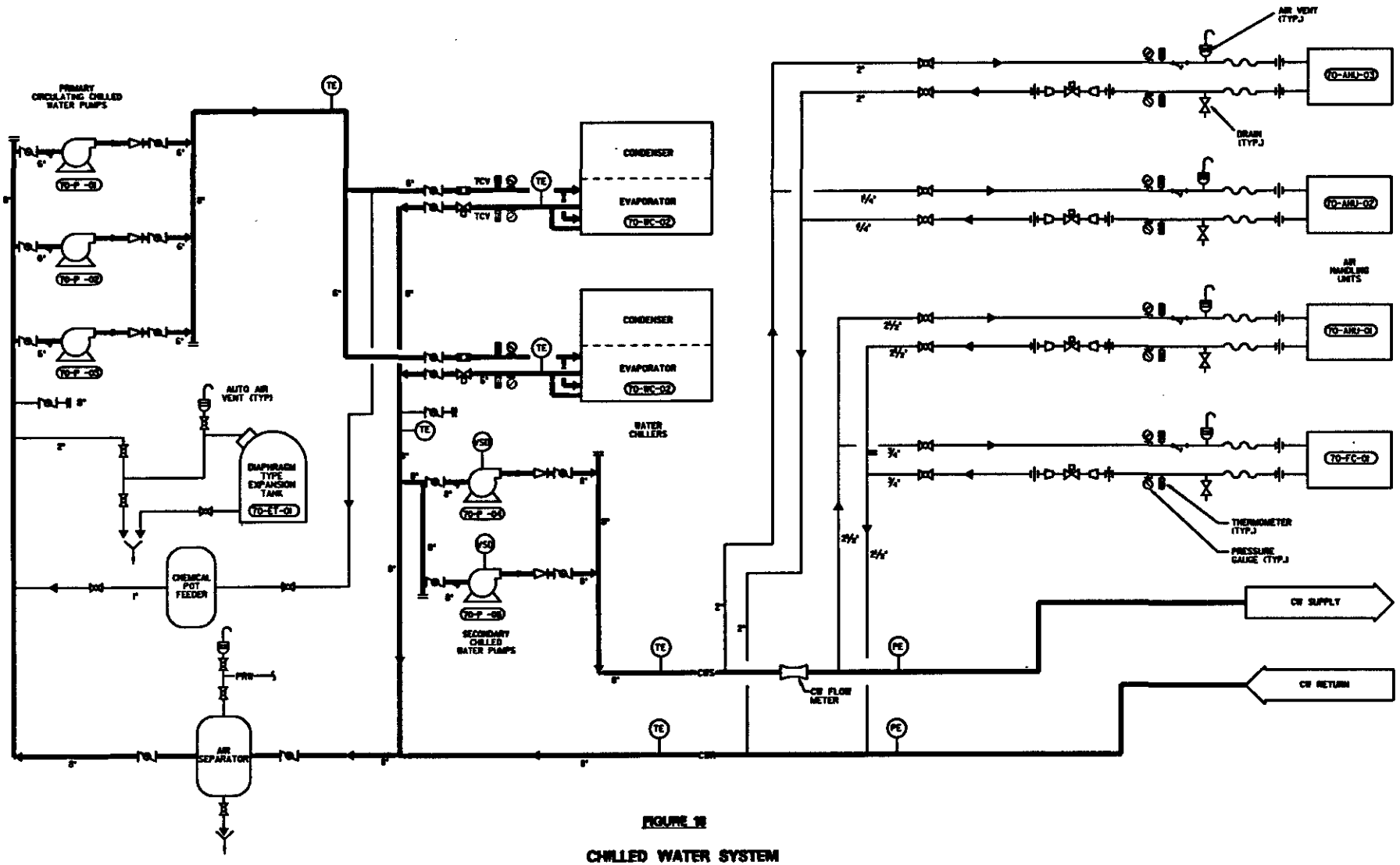

FIGURE 18

CHILLED WATER SYSTEM
FLOW DIAGRAM

R:\mbo-camp\figure18.dgn
05-OCT-2006 08:46
sbravo