IX. Appendices

A. Terms and Abbreviations used in this Report
B. Methods of Analysis
C. Frequency of Analysis and Type of Sample – 2009
D. Laboratories Contributing Results used in this report
E. Staff Contributing to this Report

A. Terms and Abbreviations used in this Report

Along with standard abbreviations the following is a list of local/uncommon abbreviations and terms for the readers' reference.

PLANT TERMS

U.S.EPA	- United States Environmental Protection Agency.
NPDES	- National Pollutant Discharge Elimination System.
WWTP	- Wastewater Treatment Plant.
WRP	- Water Reclamation Plant.
PLWTP or PLWWTP	- Pt. Loma Wastewater Treatment Plant
PLR	- Point Loma Raw (influent to the plant).
PLE	- Point Loma Effluent (effluent from the plant).
N-1-P	- North Digester Number 1, Primary, Pt. Loma
N-2-P	- North Digester Number 2, Primary, Pt. Loma
C-1-P	- Central Digester Number 1, Primary, Pt. Loma
C-2-P	- Central Digester Number 2, Primary, Pt. Loma
S-1-P	- South Digester Number 1, Primary, Pt. Loma
S-2-P	- South Digester Number 2, Primary, Pt. Loma
Dig 7	- Digester Number 7, Primary, Pt. Loma
Dig 8	- Digester Number 8, Primary, Pt. Loma
DIG COMP	- Digested Biosolids Composite; a composite of grabs taken from each of the in-service digesters.
RAW COMP	- A Composite of Raw Sludge taken over the preceding 24 hrs.
NCWRP	- North City Water Reclamation Plant
N01-PS_INF	- The plant primary Influent from Pump Station 64
N01-PEN	- The plant primary Influent from the Penasquitos pump station.
N30-DFE	- Disinfected Final Effluent
N34-REC WATER	Reclaimed Water.
N10-PSP COMB	- raw sludge
N15-WAS LCP	- Waste Activated Sludge – low capacity pumps
SBOO	- South Bay Ocean Outfall or South Bay Outfall
SB_INF_02	- The plant Influent
SB_OUTFALL_00 -	The plant discharge to ocean effluent
SB_ITP_COMB_EFF – effluents	The plant discharge to ocean and International Waste Treatment Plant combined
SB_PRI_EFF_01 -	The plant primary Influent
SB_SEC_EFF_00 -	The plant secondary Influent
SB_REC_WATER_34 -	Reclaimed Water
SB_RSL_10 -	The plant primary sedimentation tank to raw sludge line
MBC	- Metro Biosolids Center
MBCDEWCN	- Metro Biosolids Center Dewatering Centrifuges; typically the dewatered biosolids from these.
MBC_COMBCN	- MBC Combined Centrate; the centrate from all the dewatering centrifuges. (The return stream from MBC to the sewer system.)
MBC_NC_DSL	- North City to Metropolitan Biosolids Center (MBC) Digested Sludge Line.
Dig 1	- MBC Digester number 1.
Dig 2	- MBC Digester number 2.
Dig 3	- MBC Digester number 3.
Biosolids	- In most cases Biosolids and digested (a processed) Sludge is synonymous.

UNITS

mg/L .....*milligrams per liter*
ug/L .....micrograms per liter = 0.001 mg/L
ng/L ..... nanograms per liter = 0.001 ug/L
mg/Kg ..... milligrams per kilogram
ug/Kg..... micrograms per kilogram
ng/Kg..... nanograms per kilogram
pg/L ..... picograms per liter
pg/Kg.....picograms per kilogram (a.k.a.
pc/L or pCi/L.... pico curies per liter
TU ..... toxicity units
ntu ..... nephelometric turbidity units
^{o}C.....degrees Celsius = degrees centigrade
MGD/mgd ..... million gallons per day
umhos/cm. . .....micromhos per centimeter
uS .....microsiemens = umhos
mils/100 mL .....millions per 100 milliliters
nd.....not detected
NA.....not analyzed (when in a data column)
NR.....not required
NS .....not sampled

CHEMICAL TERMS & ABBREVIATIONS:

AA..... Atomic Absorption Spectroscopy
BOD ..... Biochemical Oxygen Demand
CN^- ..... Cyanide
COD ..... Chemical Oxygen Demand
Cr^{6+} ..... Hexavalent Chromium
D.O. ..... Dissolved Oxygen
DDD ..... Dichlorodiphenyldichloroethane (a.k.a. TDE-tetrachlorodiphenylethane)
DDE ..... Dichlorodiphenyldichloroethylene
DDT ..... Dichlorodiphenyltrichloroethane
$FeCl_3$..... Ferric Chloride
G&O..... Grease and Oil
GC ..... Gas chromatography.
GC-ECD..... -Electron Capture Detector.
GC-FID ..... -Flame Ionization Detector.
GC-FPD ..... -Flame Photometric Detector.
GC-MS ..... -Mass Spectroscopy.
H_2S ..... Hydrogen Sulfide
Hg..... Mercury
IC..... Ion Chromatography
Induct ..... ICP-AES Inductively Coupled Plasma-Atomic Emission Spectroscopy
ICP-AES
MDL..... Method Detection Limit
MSD..... Mass Spectroscopy Detector
NH_3..... Ammonia
NH_3-N ..... Ammonia Nitrogen
NH_4^+ ..... Ammonium ion
NO_3^-..... Nitrate
PAD..... Pulsed Amperometric Detector
PCB ..... Polychlorinated Biphenyls
PO_4^{3-} ..... Phosphate
SO_4^{2-} ..... Sulfate
SS ..... Suspended Solids
TBT ..... Tributyl tin
TCH..... Total Chlorinated Hydrocarbons (i.e. chlorinated pesticides & PCB's)
TCLP Toxic TCLP Toxicity Characteristic Leaching Procedure
TDS ..... Total Dissolved Solids
TS ..... Total Solids
TVS ..... Total Volatile Solids
VSS ..... Volatile Suspended Solids

B. Methods of Analysis

WASTEWATER INFLUENT and EFFLUENT (General)

Analyte	Description	Instrumentation	Reference[1]
Alkalinity	Selected Endpoint Titration	Mettler DL-21 & 25 Titrator Orion 950	(i) 2320 B
Ammonia Nitrogen	Distillation and Titration	Buchi Distillation Unit K-314, B-324, K-350 Orion 950 pH Meter	(i) 4500-NH3 B & C
Biochemical Oxygen Demand (BOD-5 Day)	Dissolved Oxygen Meter with Dissolved Oxygen Probe	YSI-5000 DO Meter YSI-5100 DO Meter YSI 59 DO Meter (5905 Probe)	(i) 5210 B
Biochemical Oxygen Demand (BOD-Soluble)	Dissolved Oxygen Probe	YSI-5000 DO Meter YSI-5100 DO Meter YSI 59 DO Meter (5905 Probe)	(i) 5210 B
Chemical Oxygen Demand (COD)	Closed Reflux / Colorimetric DR 2000 / DR 2700	Hach DR-2010 UV/Vis spectrophotometer	HACH 8000
Conductivity	Conductivity Meter with Wheatstone Bridge probe	YSI-3100, YSI-3200, Orion 115A,Orion 250, Accumet Model 150	(g) 2510 B
Cyanide	Acid Digest/Distil./Colorimetric	Hach DR-4000/Vis	(i) 4500-CN E
Floating Particulates	Flotation Funnel	Mettler AX-105 Mettler AG 204 Balance	(g) 2530 B
Flow	Continuous Meter	Gould (pressure sensor), ADS (sonic sensor), or Venturi (velocity sensor)	
Hardness; Ca, Mg, Total	ICP-AES / Calculation	TJA IRIS	(a) 200.7 (h) 2340 B
Kjeldahl Nitrogen (TKN)	Macro-Digestion / Titration	Labconco digestion block Buchi B-324 distiller & Mettler DL25 titrator	(i)Digestion= 4500-Norg B
Oil and Grease	Hexane Extraction / Gravimetric	Mettler AX-105 Balance	(a) 1664A
Organic Carbon (TOC)	Catalytic Oxidation / IR Water Production Laboratory)	Shimadzu ASI-5000	(f) 5310 B
pH	Hydrogen+Reference Electrode	Various models of pH meters.	(i) 4500-H+ B
Radiation (alpha & beta)	Alpha Spectroscopy Gamma Spectroscopy	Canberra 7401 (alpha) Canberra GC25185 (beta)	(h) 7110 B
Solids, Dissolved-Total	Gravimetric @ 180°C using analytical balance	Mettler AG204,AX105,AB204	(i) 2540 C
Solids, Settleable	Volumetric	Imhoff Cone	(i) 2540 F
Solids, Suspended-Total	Gravimetric @ 103-105°C	Mettler AG204,AX105,AB204	(i) 2540 D
Solids, Suspended-Volatile	Gravimetric @ 500°C	Mettler AG204,AX105,AB204	(i) 2540 E
Solids, Total	Gravimetric @ 103-105°C	Mettler AG204,AX105,AB204	(a) 160.3
Solids, Total-Volatile	Gravimetric @ 500°C	Mettler AG204,AX105,AB204	(a) 160.4
Temperature	Direct Reading	Fisher Digital Thermometer	(g) 2550 B
Turbidity	Nephelometer Turbidimeter	Hach 2100-N Meter Hach 2100-AN Meter	(g) 2130 B
Bromide, Chloride, Fluoride, Nitrate, Phosphate, Sulfate	Ion Chromatography	Dionex ICS 3000	(d) 300.0

[1] Reference listing is found following this listing of analytical methods.

WASTEWATER INFLUENT and EFFLUENT (Metals)

Analyte	Description	Instrumentation	Reference[1]
Aluminum	Acid Digestion / ICP-AES	TJA IRIS	(e) 200.7
Antimony	Acid Digestion / ICP-AES	TJA IRIS	(e) 200.7
Arsenic	Hydride Generation / AA	TJA Solaar M6	(h) 3114 C
Barium	Acid Digestion / ICP-AES	TJA IRIS	(e) 200.7
Beryllium	Acid Digestion / ICP-AES	TJA IRIS	(e) 200.7
Boron	Acid Digestion / ICP-AES	TJA IRIS	(e) 200.7
Cadmium	Acid Digestion / ICP-AES	TJA IRIS	(e) 200.7
Calcium	Acid Digestion / ICP-AES	TJA IRIS	(e) 200.7
Chromium	Acid Digestion / ICP-AES	TJA IRIS	(e) 200.7
Cobalt	Acid Digestion / ICP-AES	TJA IRIS	(e) 200.7
Copper	Acid Digestion / ICP-AES	TJA IRIS	(e) 200.7
Iron	Acid Digestion / ICP-AES	TJA IRIS	(e) 200.7
Lead	Acid Digestion / ICP-AES	TJA IRIS	(e) 200.7
Lithium	Acid Digestion / ICP-AES	TJA IRIS	(e) 200.7
Magnesium	Acid Digestion / ICP-AES	TJA IRIS	(e) 200.7
Manganese	Acid Digestion / ICP-AES	TJA IRIS	(e) 200.7
Mercury	Cold Vapor Generation / AF	Leeman HYDRA GOLD	(g) 245.7
Molybdenum	Acid Digestion / ICP-AES	TJA IRIS	(e) 200.7
Nickel	Acid Digestion / ICP-AES	TJA IRIS	(e) 200.7
Potassium	Acid Digestion / ICP-AES	TJA IRIS	(e) 200.7
Selenium	Hydride Generation / AA	TJA Solaar M6	(h) 3114 C
Silver	Acid Digestion / ICP-AES	TJA IRIS	(e) 200.7
Sodium	Acid Digestion / ICP-AES	TJA IRIS	(e) 200.7
Thallium	Acid Digestion / ICP-AES	TJA IRIS	(e) 200.7
Vanadium	Acid Digestion / ICP-AES	TJA IRIS	(e) 200.7
Zinc	Acid Digestion / ICP-AES	TJA IRIS	(e) 200.7

1 Reference listing is found following this listing of analytical methods.

WASTEWATER INFLUENT and EFFLUENT (Organics)

Analyte	Description	Instrumentation	Reference[1]
Acrolein and Acrylonitrile	Purge & Trap, GC-MSD	O-I Analytical Eclipse 4660/4552 HP-6890N GC / 5975 MSD Capillary J&W DB-624	(c) 8260 B
Base/Neutral Extractables	Basic / CH2Cl2 continuous extraction, GC-MSD	HP-6890GC / 5973MSD Agilent-7890GC / 5975MSD Capillary DB-5.625	(a) 625 (b)
Benzidines	Basic / CH2Cl2 continuous extraction, GC-MSD	HP-6890GC / 5973MSD Agilent-7890GC / 5975MSD Capillary DB-5.625	(a) 625
Chlorinated Compounds	CH2Cl2 extraction, GC-ECD	Varian 3800 GC-ECD Varian 3800 GC-ECD RTX-5/60m : RTX-1701/60m	(a) 608
Dioxin	CH2Cl2 extraction, GC/MS/MS	Varian Saturn -MS-MS Varian 3800 GC	(a) 8280A
Organophosphorus Pesticides	CH2Cl2 extraction, hexane exchange, GC-PFPD	Varian 3800 GC-PFPD RTX-1 :RTX-50	(a) 612
Phenolic Compounds	Acidic / CH2Cl2 continuous extraction, GC-MSD	HP-6890GC / 5973MSD Agilent-7890GC / 5975MSD Capillary DB-5.625	(a) 625 (b)
Purgeables (VOCs)	Purge & Trap, GC-MSD	O-I Analytical Eclipse 4660/4552 HP-6890N GC / 5973N MSD Capillary J&W DB-624	(a) 8260B (b)
Tri, Di, and Monobutyl Tin	CH2Cl2 extraction, derivatization, hexane exchange, GC-FPD	Varian 3400 GC-FPD DB-1/30m : RTX-50	(l)

1 Reference listing is found following this listing of analytical methods.

LIQUID SLUDGE: Raw, Digested, and Filtrate (General)

Analyte	Description	Instrumentation	Reference[1]
Alkalinity	Selected Endpoint Titration	Mettler DL-25 Titrator Orion 950	(g) 2320 B
Cyanide	Acid Digest-Distil / Colorimetric	Hach DR/4000V	(h) 4500-CN E
pH	Hydrogen+Reference Electrode	Various models of pH meters.	(c) 9010 B
Radiation (alpha & beta)	Alpha Spectroscopy Gamma Spectroscopy	Canberra 7401 (alpha) Canberra GC25185 (beta)	(h) 7110 B
Sulfides	Acid Digest-Distil / Titration	Class A Manual Buret	(c) 9030 B
Sulfides, reactive	Distillation / Titration	Class A Manual Buret	(c) 7.3.4.2
Solids, Total	Gravimetric @ 103-105°C	Mettler PB 4002-S Mettler PG 5002-S Mettler AB204	(i) 2540 B
Solids, Total-Volatile	Gravimetric @ 500°C	Mettler PB 4002-S Mettler PG 5002-S Mettler AB204	(i) 2540 E

LIQUID SLUDGE: Raw, Digested, and Filtrate (Metals)

Analyte	Description	Instrumentation	Reference[1]
Aluminum	Acid Digestion / ICP-AES	TJA IRIS	(c) 6010 B
Antimony	Acid Digestion / ICP-AES	TJA IRIS	(c) 6010 B
Arsenic	Hydride Generation / AA	TJA Solaar M6	(c) 7062
Beryllium	Acid Digestion / ICP-AES	TJA IRIS	(c) 6010 B
Barium	Acid Digestion / ICP-AES	TJA IRIS	(c) 6010 B
Boron	Acid Digestion / ICP-AES	TJA IRIS	(c) 6010 B
Cadmium	Acid Digestion / ICP-AES	TJA IRIS	(c) 6010 B
Chromium	Acid Digestion / ICP-AES	TJA IRIS	(c) 6010 B
Cobalt	Acid Digestion / ICP-AES	TJA IRIS	(c) 6010 B
Copper	Acid Digestion / ICP-AES	TJA IRIS	(c) 6010 B
Iron	Acid Digestion / ICP-AES	TJA IRIS	(c) 6010 B
Lead	Acid Digestion / ICP-AES	TJA IRIS	(c) 6010 B
Manganese	Acid Digestion / ICP-AES	TJA IRIS	(c) 6010 B
Mercury	Cold Vapor Generation / AF	Leeman HYDRA GOLD	(c) 7471 A
Molybdenum	Acid Digestion / ICP-AES	TJA IRIS	(c) 6010 B
Nickel	Acid Digestion / ICP-AES	TJA IRIS	(c) 6010 B
Selenium	Hydride Generation / AA	TJA Solaar M6	(c) 7742
Silver	Acid Digestion / ICP-AES	TJA IRIS	(c) 6010 B
Thallium	Acid Digestion / ICP-AES	TJA IRIS	(c) 6010 B
Vanadium	Acid Digestion / ICP-AES	TJA IRIS	(c) 6010 B
Zinc	Acid Digestion / ICP-AES	TJA IRIS	(c) 6010 B

1 Reference listing is found following this listing of analytical methods.

LIQUID SLUDGE: Raw, Digested, and Decant (Organics)

Analyte	Description	Instrumentation	Reference[1]
Acrolein and Acrylonitrile	Purge & Trap, GC-MSD	O-I Analytical Eclipse 4660/4552 HP-6890N GC / 5973N MSD Capillary J&W DB-624	(c) 8260 B (b)
Base/Neutral Extractables	Basic / CH2Cl2 continuous extraction, GC-MSD	HP-6890GC / 5973MSD Agilent-78906GC / 5975MSD Capillary DB-5.625	(a) 625 (b)
Benzidines	Basic / CH2Cl2 continuous extraction, GC-MSD	HP-6890GC / 5973MSD Agilent-78906GC / 5975MSD Capillary DB-5.625	(a) 625
Chlorinated Compounds	CH2Cl2 extraction, GC-ECD	Varian 3800 GC-ECD RTX-5/60m : RTX-1701/60m	(c) 8081 A
PCBs	CH2Cl2 extraction, GC-ECD	Varian 3800 GC-ECD RTX-5/60m : RTX-1701/60m	(c) 8082
Dioxin	CH2Cl2 extraction	Varian GC-MS/MS	(c) 8280A
Herbicides	HPLC-UV/Vis Diode Array	Dionex DX-500 / PDA-100 C-18 Hypersil 5um	(c) 8321
Organophosphorus Pesticides	CH2Cl2 extraction, hexane exchange, GC-PFPD	Varian 3800 GC-PFPD RTX-1 : RTX-50	(a) 612
Phenolic Compounds	Acidic / CH2Cl2 continuous extraction, GC-MSD	HP-6890GC / 5973MSD Agilent-78906GC / 5975MSD Capillary DB-5.625	(a) 625 (b)
Purgeables (VOCs)	Purge & Trap, GC-MSD	O-I Analytical Eclipse 4660/4552 HP-6890N GC / 5973N MSD Capillary J&W DB-624	(c) 8260 B (b)
Tri, Di, and Monobutyl Tin	CH2Cl2 extraction, derivatization, hexane exchange, GC-FPD	Varian 3400 GC-FPD DB-1/30m : RTX-50	(l)

LIQUID SLUDGE: Raw, Digested, and Decant (Digester Gases)

Analyte	Description	Instrumentation	Reference[1]
Methane	Gas Chromatography	SRI 8610C GC EG&G 100AGC	(i) 2720 C
Carbon Dioxide	Gas Chromatography	SRI 8610C GC EG&G 100AGC	(i) 2720 C
Hydrogen Sulfide	Colorimetric	Draeger H2S 2/a	

1 Reference listing is found following this listing of analytical methods.

DRIED SLUDGE: Metro Biosolids Center (General)

Analyte	Description	Instrumentation	Reference[1]
Cyanide	Acid Digest-Distillation Colorimetric	Hach DR/4000V UV/Vis	(c) 9010 A
Cyanide Reactive	Distillation / Colorimetric	Hach DR/4000V UV/Vis	(c) 7.3.3.2
pH	Hydrogen+Reference Electrode	Various models of pH meters.	(c) 9045 C
Radiation (alpha & beta)	Alpha Spectroscopy Gamma Spectroscopy	Canberra 7401 (alpha) Canberra GC25185 (beta)	(h) 7110 B
Sulfides	Acid Digest-Distil / Titration	Class A Manual Buret	(c) 9030 B
Sulfides, reactive	Distillation / Titration	Class A Manual Buret	(c) 7.3.4.2
Solids, Total	Gravimetric @ 103-105 Cº	Denver PI-314, Mettler AB204	(i) 2540 B
Solids, Total-Volatile	Gravimetric @ 500 Cº	Denver PI-314, Mettler AB204	(i) 2540 E

DRIED SLUDGE: Metro Biosolids Center (Metals)

Analyte	Description	Instrumentation	Reference[1]
Aluminum	Acid Digestion / ICP-AES	TJA IRIS	(c) 6010 B
Antimony	Acid Digestion / ICP-AES	TJA IRIS	(c) 6010 B
Arsenic	Hydride Generation / AA	TJA Solaar M6	(c) 7062
Barium	Acid Digestion / ICP-AES	TJA IRIS	(c) 6010 B
Beryllium	Acid Digestion / ICP-AES	TJA IRIS	(c) 6010 B
Boron	Acid Digestion / ICP-AES	TJA IRIS	(c) 6010 B
Cadmium	Acid Digestion / ICP-AES	TJA IRIS	(c) 6010 B
Chromium	Acid Digestion / ICP-AES	TJA IRIS	(c) 6010 B
Cobalt	Acid Digestion / ICP-AES	TJA IRIS	(c) 6010 B
Copper	Acid Digestion / ICP-AES	TJA IRIS	(c) 6010 B
Iron	Acid Digestion / ICP-AES	TJA IRIS	(c) 6010 B
Lead	Acid Digestion / ICP-AES	TJA IRIS	(c) 6010 B
Manganese	Acid Digestion / ICP-AES	TJA IRIS	(c) 6010 B
Mercury	Cold Vapor Generation / AF	Leeman HYDRA GOLD	(c) 7471 A
Molybdenum	Acid Digestion / ICP-AES	TJA IRIS	(c) 6010 B
Nickel	Acid Digestion / ICP-AES	TJA IRIS	(c) 6010 B
Selenium	Hydride Generation / AA	TJA Solaar M6	(c) 7742
Silver	Acid Digestion / ICP-AES	TJA IRIS	(c) 6010 B
Thallium	Acid Digestion / ICP-AES	TJA IRIS	(c) 6010 B
Vanadium	Acid Digestion / ICP-AES	TJA IRIS	(c) 6010 B
Zinc	Acid Digestion / ICP-AES	TJA IRIS	(c) 6010 B

Waste Extraction Test (WET)	Extraction with Sodium Citrate ICP-AES	Burrel wrist action shaker TJA IRIS	(j) Section 66261.100

1 Reference listing is found following this listing of analytical methods.

DRIED SLUDGE: Metro Biosolids Center (Organics)

Analyte	Description	Instrumentation	Reference[1]
Acrolein and Acrylonitrile	Purge & Trap, GC-MSD	O-I Analytical Eclipse 4660/4552 HP-6890N GC / 5973N MSD Capillary J&W DB-624	(c) 8260 B (b)
Base/Neutral Extractables	CH2Cl2 /Acetone sonication extraction, GC-MSD	Agilent-7890GC / 5975MSD HP-5890GC / 5972MSD Capillary DB-5.625	(c) 8270 C (c) 3550 A (b)
Chlorinated Compounds	CH2Cl2 extraction, GC-ECD	Varian 3400 GC-ECD RTX-5/60m : RTX-1701/60m	(c) 8081 A
PCBs	CH2Cl2 extraction,	Varian 3400 GC-ECD	(c) 8082

	GC-ECD	RTX-5/60m : RTX-1701/60m	
Dioxin	Outside Contact (Test America)	GC-MS	(a) 8290
Herbicides	HPLC-UV/Vis Diode Array	Dionex DX-500 / PDA-40 C-18 Hypersil 5um	(c) 8321/3545
Organophosphorus Pesticides	CH2Cl2 extraction, hexane exchange, GC-PFPD	Varian 3800 GC-PFPD DB-1/30m DB-608/30m	(c) 8141 A
Phenolic Compounds	CH2Cl2 / Acetone sonication extraction, GC-MSD	Agilent-7890GC / 5975MSD HP-5890GC / 5972MSD Capillary DB-5.625	(c) 8270 C (c) 3550 A (b)
Purgeables (VOCs)	Purge & Trap, GC-MSD	O-I Analytical Eclipse 4660/4552 HP-6890N GC / 5973N MSD Capillary J&W DB-624	(c) 8260 B
Tri, Di, and Monobutyl Tin	CH2Cl2 extraction, derivatization, hexane exchange, GC-FPD	Varian 3400 GC-FPD DB-1/30m DB-608/30m	(l)
Total Nitrogen (TN)	Combustion / GC-TCD	Carlo-Erba NC-2500 Porapak QS	(m) 9060

1 Reference listing is found following this listing of analytical methods.

OCEAN SEDIMENT (General)

Analyte	**Description**	**Instrumentation**	**Reference[1]**
Biochemical Oxygen Demand (BOD-5 Day)	Dissolved Oxygen Probe	YSI-5000 DO Meter	(g) 5210 B
Particle Size	Coarse fraction by sieve; fine fraction by laser scatter	Horiba LA-920	(q) 3-380
Sulfides	Acid Digest-Distil / IC-PAD	Dionex ICS 3000-PAD(Ag)	(k)
Solids, Total	Gravimetric @ 103-105 Cº	AND HM-120	(g) 2540 B
Solids, Total-Volatile	Gravimetric @ 500 Cº	AND HM-120	(g) 2540 E
Total Organic Carbon (TOC) and Total Nitrogen (TN)	Combustion / GC-TCD	Carlo-Erba NC-2500 Porapak QS	(c) 9060 (m)

OCEAN SEDIMENT (Metals)

Analyte	Description	Instrumentation	Reference[1]
Aluminum	Acid Digestion / ICP-AES	TJA IRIS	(c) 6010 B
Antimony	Acid Digestion / ICP-AES	TJA IRIS	(c) 6010 B
Arsenic	Hydride Generation / AA	TJA Solaar M6	(c) 7062
Beryllium	Acid Digestion / ICP-AES	TJA IRIS	(c) 6010 B
Cadmium	Acid Digestion / ICP-AES	TJA IRIS	(c) 6010 B
Chromium	Acid Digestion / ICP-AES	TJA IRIS	(c) 6010 B
Copper	Acid Digestion / ICP-AES	TJA IRIS	(c) 6010 B
Iron	Acid Digestion / ICP-AES	TJA IRIS	(c) 6010 B
Lead	Acid Digestion / ICP-AES	TJA IRIS	(c) 6010 B
Manganese	Acid Digestion / ICP-AES	TJA IRIS	(c) 6010 B
Mercury	Cold Vapor Generation / AA	Leeman PS 200II	(c) 7471 A
Nickel	Acid Digestion / ICP-AES	TJA IRIS	(c) 6010 B
Selenium	Hydride Generation / AA	TJA Solaar M6	(c) 7742
Silver	Acid Digestion / ICP-AES	TJA IRIS	(c) 6010 B
Thallium	Acid Digestion / ICP-AES	TJA IRIS	(c) 6010 B
Tin	Acid Digestion / ICP-AES	TJA IRIS	(c) 6010 B
Zinc	Acid Digestion / ICP-AES	TJA IRIS	(c) 6010 B

OCEAN SEDIMENT (Organics)

Analyte	Description	Instrumentation	Reference[1]
Base/Neutral Extractables	CH2Cl2 / Acetone ASE GC-MSD	Agilent-78906GC / 5975MSD HP-5890GC / 5972MSD Capillary DB-5.625	(c) 8270 C (b) 3545A
Chlorinated Compounds	CH2Cl2 extraction, GC-ECD/MS/MS	Varian Saturn GC-ECD/MS/MS DBXLB/60m	(c) 8081 A 3545A
PCBs as Congeners	CH2Cl2 extraction, GC-ECD/MS/MS	Varian Saturn GC-ECD/MS/MS DBXLB/60m	(c) 8082 3545A
Organophosphorus Pesticides	CH2Cl2 extraction, hexane exchange, GC-PFPD	Varian 3800 GC-PFPD RTX-1 : RTX-50	(c) 8141 A
Tri, Di, and Monobutyl Tin	CH2Cl2 extraction, derivatization, hexane exchange, GC-FPD	Varian 3400 GC-FPD DB-1/30m : RTX_50	(l)

1 Reference listing is found following this listing of analytical methods.

FISH TISSUE: Liver, Muscle, and Whole (General)

Analyte	Description	Instrumentation	Reference[1]
Solids, Total	Freeze Drying Gravimetric	Labconco Freezone 6 Mettler AG-104 Balance	(n)
Lipids	Hexane/Acetone Extraction Gravimetric	Dionex ASE-200 Mettler AG-104 Balance	(o)

FISH TISSUE: Liver, Muscle, and Whole (Metals)

Analyte	Description	Instrumentation	Reference[1]
Aluminum	Acid Digestion / ICP-AES	TJA IRIS	(e) 200.3 / 200.7
Antimony	Acid Digestion / ICP-AES	TJA IRIS	(e) 200.3 / 200.7
Arsenic	Acid Digestion / ICP-AES	TJA IRIS	(e) 200.3 / 200.7
Beryllium	Acid Digestion / ICP-AES	TJA IRIS	(e) 200.3 / 200.7
Cadmium	Acid Digestion / ICP-AES	TJA IRIS	(e) 200.3 / 200.7
Chromium	Acid Digestion / ICP-AES	TJA IRIS	(e) 200.3 / 200.7
Copper	Acid Digestion / ICP-AES	TJA IRIS	(e) 200.3 / 200.7
Iron	Acid Digestion / ICP-AES	TJA IRIS	(e) 200.3 / 200.7
Lead	Acid Digestion / ICP-AES	TJA IRIS	(e) 200.3 / 200.7
Manganese	Acid Digestion / ICP-AES	TJA IRIS	(e) 200.3 / 200.7
Mercury	Cold Vapor Generation / AA	Leeman PS 200II	(e) 245.6
Nickel	Acid Digestion / ICP-AES	TJA IRIS	(e) 200.3 / 200.7
Selenium	Hydride Generation / AA	TJA Solaar M6	(c) 7742
Silver	Acid Digestion / ICP-AES	TJA IRIS	(e) 200.3 / 200.7
Thallium	Acid Digestion / ICP-AES	TJA IRIS	(e) 200.3 / 200.7
Tin	Acid Digestion / ICP-AES	TJA IRIS	(e) 200.3 / 200.7
Zinc	Acid Digestion / ICP-AES	TJA IRIS	(e) 200.3 / 200.7

FISH TISSUE: Liver, Muscle, and Whole (Organics)

Analyte	Description	Instrumentation	Reference[1]
Base/Neutral Extractables	Basic / CH2Cl2 ASE extraction, GC-MSD	Dionex ASE-200 HP-5890GC / 5971MSD Capillary DB-XLB/30m	(c) 3545 / 8270 C
Chlorinated Compounds	CH2Cl2 extraction, GC-ECD/MS/MS	Varian 3800 GC Saturn 2000 MS-Ion Trap DB-XLB/60m	(c) 3545 / 8081 A
PCBs	CH2Cl2 extraction, hexane exchange, GC-ECD/MS/MS	Varian 3800 GC Saturn 2000 MS-Ion Trap DB-XLB/60m	(c) 3545 / 8082

1 Reference listing is found following this listing of analytical methods.

Method References: Methods of Analysis Used to Produce the Data Presented in this Report.

a) Methods for Chemical Analysis of Water and Wastes,
EPA, Environmental Monitoring and Support Laboratory, Cincinnati, Ohio,
March 1979 (EPA-600/4-79-020), 1983 Revision, and March 1984 (EPA-600/4-84-017).

b) U.S. EPA Contract Laboratory Program, Statement of Work for Organic Analysis,
Multi-Media, Multi-Concentration, 7/85 revision and 1/91 revision.

c) Test Methods for Evaluating Solid Waste, Physical/Chemical Methods,
U.S. EPA Office of Solid Waste and emergency Response,
Washington, D.C. 20460, November 1986, SW-846, Third Edition.
Revision 0 September 1994, December 1996, Revision 2

d) The Determination of Inorganic Anions in Water by Ion Chromatography,
Revision 2.1, August 1993

e) The Determination of Metals and Trace Elements in Water and Waste
Revision 4.4, EMMC Version, EMMC Methods Work Group, 1994

f) Standard Methods for the Examination of Water and Wastewater,
APHA, AWWA, WPCF, 17th Edition, 1989.

g) Standard Methods for the Examination of Water and Wastewater,
APHA, AWWA, WPCF, 18th Edition, 1992.

h) Standard Methods for the Examination of Water and Wastewater,
APHA, AWWA, WPCF, 19th Edition, 1995.

i) Standard Methods for the Examination of Water and Wastewater,
APHA, AWWA, WPCF, 20th Edition, 1998.

j) Criteria for Identification of Hazardous and Extremely Hazardous Wastes,
California Code of Regulations (CCR), Title 22.

k) DIONEX AU 107, R.D.Rocklin and E.L.Johnson, ANAL. CHEM., 1986, 55, 4

l) Adaptation of method by the Naval Ocean Systems Center, San Diego, Marine Environment Branch, San Diego, CA 92152-5000

m) ”TOC/TN in Marine Sediments...”, SCCWRP Annual Report, 1990-1991, and 1991-1992.

n) ”A Guide to Freeze Drying for the Laboratory...”, LABCONCO, 3-53-5/94-Rosse-5M-R3, 1994.

o) ”Lipids Content in Fish Tissues via Accelerated Solvent Extraction...”,WWChem, EMTS/MWWD, 1998

v) Procedures for Handling and Chemical Analysis of Sediment and Water Samples,
Russel H. Plumb, Jr., May 1981, EPA/Corp of Engineers Technical Committee on
Criteria for Dredged and Fill Material, EPA Contract 4805572010.

C. Frequency of Analysis and Type of Sample - 2010

1. Definitions.

D= Daily W= Weekly M= Monthly Q= Quarterly S= Semi-Annual

		FREQUENCY OF ANALYSIS			
Constituent	***Type of Sample***	***Influent***	***Effluent***	***Comb_Effluent***	***Reclaim***
Permit Required Testing					
Flow	Recorder/Totalizer	*Continuous*	*Continuous*		*Continuous*
Biochemical Oxygen Demand -Total (5-day)	24hr Composite	*D*	*D*	*Q*	*D*
Oil and Grease	Grab		*W*	*Q*	
pH	Grab		*D*	*Q*	*D*
Settleable Solids	Grab		*W*	*Q*	
Temperature			*W*	*Q*	
Total Suspended Solids	24hr Composite	*D*	*D*	*Q*	*D*
Volatile Suspended Solids	24hr Composite				*D*
Total Dissolved Solids	24hr Composite				*M*
Turbidity	24hr Composite		*W*	*Q*	*W*
Dissolved Oxygen	Grab		*W*	*Q*	
Total Residual Chlorine	Grab		*W*	*Q*	
As,Cd,Cr,Cu,Pb,Hg,Ni,Ag,Zn	24hr Composite	*M*	*M*	*Q*	
Sb, Be, Tl	24hr Composite		*M*	*Q*	
Se	24hr Composite		*M*	*Q*	
Fe, Mn, B					*M*
Anions (Chloride, Sulfate, Nitrate as N, Fluoride)	24hr Composite				*M*
Ammonia-Nitrogen	24hr Composite		*M*	*Q*	
MBAS	24hr Composite				*M*
Cyanide	24hr Composite	*M*	*M*	*Q*	
Acrolein and Acrylonitrile	Grab		*Q*	*Q*	
Base/Neutral Compounds	24hr Composite		*Q*	*Q*	
Benzidines	24hr Composite		*Q*	*Q*	
Dioxin	24hr Composite		*M*	*Q*	
Percent Sodium	24hr Composite				*M*
Pesticides, chlorinated	24hr Composite		*M*	*Q*	
Phenols, non-chlorinated	24hr Composite		*M*	*Q*	
Phenols, chlorinated	24hr Composite		*M*	*Q*	
Polychlorinated Biphenyls	24hr Composite		*Q*	*Q*	
Purgeable (Volatile) Compounds	Grab		*Q*	*Q*	
Tri, Di, & monobutyl tins	24hr Composite		*Q*	*Q*	
Radiation	24hr Composite		*M*	*Q*	
Toxicity (Acute & Chronic)*	24hr Composite		*W*	*Q*	
*Reported monthly in the *Toxicity Testing Report* by the Biology Section.					

D= DailyW= Weekly M= Monthly Q= Quarterly S= Semi-Annual

		FREQUENCY OF ANALYSIS			
Constituent	***Type of Sample***	***Influent***	***Effluent***	***Comb_Effluent***	***Reclaim***
Additional Testing					
Total Dissolved Solids	24hr Composite	*D*			
Volatile Suspended Solids	24hr Composite	*D*			
Pesticides, organophosphorus	24hr Composite	*S*	*S*	*S*	*S*
Cations (Ca^{2+}, Mg^{2+}, Li^{+},Na^{+},K^{+})	24hr Composite	*M*	*M*	*Q*	*M*
Anions	24hr Composite	*M*	*M*	*Q*	
Fe	24hr Composite	*M*	*M*	*Q*	
Oil and Grease	Grab	*Q*			*Q*
pH	Grab	*D*			
Settleable Solids	Grab	*Q*			
MBAS	24hr Composite	*Q*	*Q*	*Q*	
Turbidity	24hr Composite	*Q*			*Continuos*
Sb, Be, Tl	24hr Composite	*M*			*M*
Se	24hr Composite	*M*			*M*
Ammonia-Nitrogen	24hr Composite	*Q*			*Q*
Cyanide	24hr Composite				*Q*
Acrolein and Acrylonitrile	Grab	*Q*			*Q*
Base/Neutral Compounds	24hr Composite	*Q*			*Q*
Benzidines	24hr Composite	*Q*			*Q*
Dioxin	24hr Composite	*M*			*Q*
Pesticides, chlorinated	24hr Composite	*M*			*Q*
Phenols, non-chlorinated	24hr Composite	*M*			*Q*
Phenols, chlorinated	24hr Composite	*M*			*Q*
Polychlorinated Biphenyls	24hr Composite	*Q*			*Q*
Tri, Di, & monobutyl tins	24hr Composite	*Q*			*Q*
Percent Sodium	24hr Composite		*M*	*Q*	
Purgeable (Volatile) Compounds	Grab	*Q*			*Q*
Radiation	24hr Composite	*M*			*Q*

D. Laboratories Contributing Results used in this report.

i) Metropolitan Wastewater Chemistry Laboratory
(EPA Lab Code: CA00380, ELAP Certificate: 1609)
5530 Kiowa Drive
La Mesa, CA 91942
(619)668-3212
All results except those listed below.

ii) Point Loma Wastewater Chemistry Laboratory
(EPA Lab Code: CA01435, ELAP Certificate: 2474)
1902 Gatchell Road
San Diego, CA 92106
(619)221-8765
Process control analyses and wet methods for the plant.

iii) North City Wastewater Chemistry Laboratory
(EPA Lab Code: CA01436,
ELAP Certificate: 2477)
4949 Eastgate Mall
San Diego, CA 92121
(858)824-6009
Process control analyses and wet methods for the plant.

iv) Metro Biosolids Center Chemistry Laboratory
(EPA Lab Code: CA01437, ELAP Certificate: 2478)
5240 Convoy Street
San Diego, CA 92111
(858)614-5834
Process control analyses and wet methods for the plant.

v) South Bay Water Reclamation Plant
(EPA Lab Code: CA01460, ELAP Certificate: 2539)
2411 Dairy Mart Road
San Diego, CA 92173
619.428.7349
Process control analyses and wet methods for the plant.

vi) City of San Diego - Water Quality Laboratory
(EPA Lab Code: CA00080, ELAP Certificate: 1058)
5530 Kiowa Drive
La Mesa, CA 91942
(619)668-3237
Total Organic Carbon in Wastewater

vii) City of San Diego - Marine Microbiology and Vector Management
(EPA LabCode: CA01393, ELAP Certificate: 2185)
4918 Harbor Drive, Suite 101
San Diego, CA 92106
(619) 758-2311
Microbiology

viii) City of San Diego – Toxicity Bioassay Laboratory
(EPA Lab Code: CA01302, ELAP Certificate: 1989)
4918 Harbor Drive, Suite 101
San Diego, CA 92106
(619) 758-2347
Bioassays

ix) Test America
880 Riverside Parkway
Sacramento, CA 95605
NELAP Certification: 01119CA
Telephone# (916) 373-5600
Dioxins/Furans in solids only.

x) Test America
2800 George Washington Way
Richland, WA 99354-1613
CA ELAP Certification: 2425
Telephone# (509) 375-3131
Gross Alpha/Beta Radioactivity

xi) CRG Laboratories
2020 Del Amo BLVD.
Suite # 200
Torrance, CA 90501
ELAP Certification: 2261
Telephone# (714) 755-3263
Herbicides in solids only.

Summary and Overview:

The Wastewater Chemistry Services Section, Metropolitan Wastewater Department, City of San Diego performs most of the NPDES and other permit and process control chemical and physical testing for the City of San Diego E.W. Blom, Pt. Loma Wastewater Treatment Plant (PLWWTP), North City Water Reclamation Plant (NCWRP), South Bay Water Reclamation Plant (SBWRP), and the Metro Biosolids Center (MBC). We also performs the chemical/physical testing of ocean sediment and fish tissue samples for the Ocean monitoring program for the City of San Diego (PLWWTP Ocean Outfall and SBWRP Ocean Outfall) and the International Boundary and Water Commission, International Treatment Plant outfall. We also perform environmental testing for various customers, both internal to the City of San Diego and for other agencies.

The QA/QC activities of the Laboratory are comprehensive and extensive. Of the 37,868 samples received in the Laboratory in 2010, approximately 33% were Quality Control (QC) samples, such as blanks, check samples, standard reference materials, etc. 120 different analyses were performed throughout the year resulting in 259,791 analytical determinations. Of the determinations, 113,292(~44%) were QC determinations (e.g. blanks, lab. replicates, matrix spikes, surrogates, etc.) used to determine the accuracy, precision, and performance of each analysis and batch.

We have 5 separate laboratory facility locations, each with its own California ELAP (Environmental Laboratory Accreditation Program) certification for the fields of testing required under California regulations. This is a rigorous program involving continuing independent blind performance testing, biannual comprehensive audits, and extensive documentation requirements. Each of the 5 laboratory facilities in the Metropolitan Wastewater (Metro) Department are independently certified. California ELAP certifies fields of testing (methods/analytes) only for Water, Wastewater, and Hazardous materials for which methods are published in the Federal Register or specifically approved in regulation by U.S.EPA. Additionally, the Laboratory performs analyses using methods for which certification does not exist, such as ocean sediment and sea water determinations. Those methods have been developed in-house, derived from or in collaboration with other scientific laboratories (e.g. Scripps Institute of Oceanography, Southern California Coastal Water Research Project, et. al.) and have been used extensively in multi-agency EPA and State sponsored studies over the past several years. Many methods of analysis developed for matrices and applications not within ELAP jurisdiction have been adapted from ELAP listed methods. In all cases, we apply generally accepted standards of performance and quality control to methods.

Additionally, the operating division and all Metro Department Laboratories maintained International Standards Organization (ISO) 14001 Environmental Management Systems certification.

Contract laboratories are also required to use only approved methods for which they hold certification for, and/or are approved by the appropriate regulatory agency (e.g. SDRWQCB).

The following report summarizes the QA/QC activities during 2010 and documents the laboratory information and certifications for those laboratories which provided data used in NPDES and other permit monitoring or environmental testing during the year.

Laboratories Contributing Results used in this report.

Laboratory Name	EPA Lab Code	ELAP Cert. #	Address	Phone #	Contribution
Alvarado Wastewater Chemistry Laboratory	CA00380	1609	5530 Kiowa Drive La Mesa, Ca 91942	(619)668-3212	All results except those listed below.
Pt. Loma Wastewater Chemistry Laboratory	CA01435	2474	1902 Gatchell Road San Diego, CA 92106	(619)221-8765	Process Control analyses and wet methods for the treatment plant.
North City Wastewater Chemistry Laboratory	CA01436	2477	4949 Eastgate Mall San Diego, CA 92121	(858)824-6009	Process Control analyses and wet methods for the treatment plant.
Metro Biosolids Center Chemistry Laboratory	CA01437	2478	5240 Convoy Street San Diego, CA 92111	(858)614-5834	Process Control analyses and wet methods for the treatment plant.
South Bay Wastewater Chemistry Laboratory	CA01460	2539	2411 Dairy Mart Road San Diego, CA 92173	(619)428-7349	Process Control analyses and wet methods for the treatment plant.
City of San Diego Water Quality Laboratory	CA00080	1058	5530 Kiowa Drive, La Mesa, Ca 91942	(619)668-3237	Total Organic Carbon in Wastewater
City of San Diego-Marine Microbiology Laboratory	CA01393	2185	2392 Kincaid Road San Diego, CA 92101	(619)758-2312	Microbiology
City of San Diego Toxicology Laboratory	CA01302	1989	2392 Kincaid Road San Diego, CA 92101	(619)758-2341	Bioassays
Test America Laboratories, Inc.		2425	2800 George Washington Way, Richland WA 99354	(509)375-3131	Gross Alpha/Beta Radioactivity
TestAmerica West Sacramento		01119CA	880 Riverside Parkway West Sacramento, Ca 95605		Dioxins/Furans in Solids.
CRG Marine Laboratories, Inc.		2261	2020 Del Amo Blvd., Suite 200, Torrance, CA 90501		Dissolved Metals for Convention Center Monitoring

Facilities & Scope:

The Wastewater Chemistry Services Section(WCS) comprises five geographically separated laboratories. The Section's main laboratory facilities and headquarters located at the Alvarado Joint Laboratory building in La Mesa and the four satellite wastewater chemistry laboratories located at MWWD treatment plants maintain individual California Department of Health Service, Environmental Laboratory Accreditation Program (ELAP) certification in their respective Fields of Testing (FoT). Each laboratory has its own U.S.EPA Lab Code as shown in the following table.

Laboratory Facility	Laboratory	Address	Phone	EPA Lab. Code	ELAP Cert. No.
Alvarado Laboratory	Wastewater Chemistry Laboratory	5530 Kiowa Drive, La Mesa CA 91942	619.668.3215	CA00380	1609
Point Loma Satellite Lab	Pt. Loma Wastewater Chemistry Laboratory	1902 Gatchell Rd., San Diego, CA 92106	619.221.8765	CA01435	2474
North City Water Reclamation Plant Satellite Lab	North City Wastewater Chemistry Laboratory	4949 Eastgate Mall, San Diego, CA 92121	858.824.6009	CA01436	2477
Metro Biosolids Center Satellite Lab	Metro Biosolids Center Wastewater Chemistry Lab	5240 Convoy Street, San Diego, CA 92111	858.614.5834	CA01437	2478
South Bay Water Reclamation Plant Satellite Lab	South Bay Wastewater Chemistry Laboratory	2411Dairy Mart Rd., San Diego CA 92154	619.428.7349	CA01460	2539

The information presented in this report applies to the Wastewater Chemistry Services Section, including all of the laboratories listed above, unless specified otherwise. The main laboratory at Alvarado is the main office for the WCS and contains the most extensive laboratory facilities of the several laboratories. Along with a variety of process control and wet chemistry analyses, this facility also handles all of the trace metals, pesticides/organics determinations, and other analyses. The satellite laboratories are primarily dedicated to process control, wet chemistry, and other analyses directly related to the support of the operations of the co-located wastewater treatment plant.

The Wastewater Chemistry Services Section performs most of the NPDES and other permit and process control chemical and physical testing for the:

- E.W. Blom, Pt. Loma Wastewater Treatment Plant (PLWWTP), NPDES Permit No. CA0107409/ Order No. R9-2009-00001, including the ocean monitoring program.
- North City Water Reclamation Plant (NCWRP), Order No. 97-03.
- Metro Biosolids Center (MBC), no permit, but monitoring requirements contained in Permit No. R9-2002-0025.
- South Bay Water Reclamation Plant (SBWRP), NPDES Permit No.CA0109045/ Order No. 2006-067.
- Ocean monitoring program for the International Boundary and Water Commission, International Treatment Plant.
- Other environmental testing for various customers, both internal to the City of San Diego and other public agencies.

A small portion of the required monitoring testing is sub-contracted out to laboratories certified by ELAP for those analyses, specifically;

- Gross alpha- and Beta radiations are analyzed by Test America Laboratories, Inc.
- Total organic carbon (TOC) in water are analyzed by the Water Quality Laboratory, City of San Diego, Water Department.
- Dioxin and Furans in solids are analyzed by TestAmerica West Sacramento.

The City of San Diego pays for additional QC samples (replicates, blanks, spikes) as a routine quality check on sub-contracted laboratory work. This is beyond the usual and customary practices with contract laboratory work.

Ocean monitoring:

While there are no recognized State certifications for laboratory analyses of marine environmental samples (e.g. seawater, sediments, various tissues, etc.), the City of San Diego has been a leader in the development and standardization of analytical methods for determinations in these areas.

Many of the methods are novel approaches developed after extensive research and development from other published work (e.g. organo-tin analyses, sediment grain size, etc.) or adaptations of exiting EPA methods (e.g. SW 846 Method 8082 for PCB congeners in sediments, etc.). In all of these cases we participate in extensive inter-laboratory calibration studies. Some of the most extensive studies have involved the participation of several public, academic/research, and private laboratories under the umbrella of the Southern California Coastal Water Research Project (SCCWRP). These programs are repeated periodically as part of the Southern California Bight Regional Monitoring/Survey Project. This is a massive sampling and monitoring program participated in by all of the major Publicly Owned Treatment Works (POTWs), California Water Resource Control Boards, and research organizations.

Our laboratory is a reference (referee) laboratory for the NRCC (National Research Council of Canada) CARP-2 Certified Reference Material (CRM) for fish tissue. This was adopted as the standard reference material for QC QA for the Southern California Bight Regional Project. This sample is also used world-wide as a standard reference material. We have worked with NIST to develop a West Coast marine sediment and fish tissue standard reference material (SRM).

QA/QC Activities Summary:

Report for January 1, 2010 - December 31, 2010.[8]

The sample distribution for 2010 is not significantly changed from 2009. 259,791 analytical determinations were made on 37,868 samples received by the Laboratory in 2010(see table A.). Of these 12,518 or 33% were Quality Control (QC) samples. 11.6% were blanks and 21.1% check or reference samples.

	2010	
	Number of Samples	Percent of total samples
Table A. Samples		
Customer/Environmental samples	**25,350**	**66.94%**
Quality Control (QC) samples	**12,518**	**33.06%**
Total Samples	**37,868**	**100.00%**
QC Samples:		
Blanks:		
FIELD_BLANK	**134**	**0.35%**
REAGENT_BLANK	**15**	**0.04%**
TRIP BLANK	**3**	**0.01%**
METHOD_BLANK	**4,401**	**11.62%**
Total Blanks:	**4,553**	**12.02%**
Check samples:		
External Check samples	**4,796**	**12.67%**
Internal Check samples	**3,188**	**8.42%**
SRMs (Standard Reference Material)	**13**	**0.03%**
Total Check Samples:	**7,997**	**21.12%**
Total QC Samples:	**12,550**	**33.14%**

High levels of QC are used for laboratory determinations. 44% of the 259,791 determinations were QC (e.g. blanks, lab replicates, matrix spikes, surrogates, etc.). If calculated for the 252,527 customer samples only the percentage increases to 45%.

2.83% of total analytical determinations or 0.1% of analytical batches did not meet internal QA review due to a variety of criteria, e.g. unsuccessful calibration, unacceptable QC performance, etc. Samples having analytical determinations that were rejected are reanalyzed, or, if that is not possible, the data is either not reported or reported but flagged as having not met data quality objectives and may not be suitable for compliance determination.

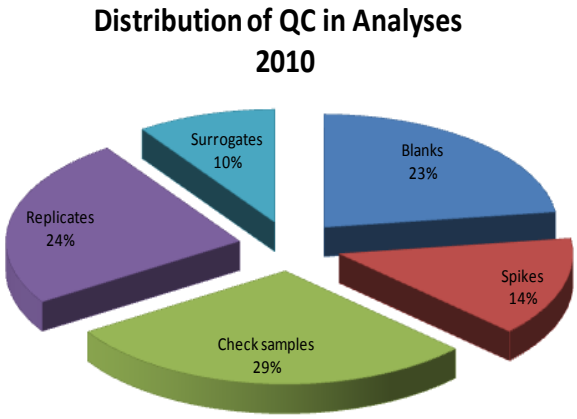

[8] Data counts (metrics) were obtained on February 2, 2010 and do not include analyses that were underway, but incomplete as of that time. All table data is based on samples collected between January 1, 2010 and December 31, 2010. This data summary is comprehensive; includes all laboratory analyses work for all customers, projects, and programs unless otherwise indicated.

Table A.2. Analyses (results) - 2010		
	Number	**Percent of total**
Total number of analytes/results determined:	**259,791**	NA
Total results not complete [2]:	1,400	0.5%
No. of results for Customer/ Environmental Samples [1,3]:	**252,527**	**97.2%**
Total number of rejected results:	7,264	2.83%
No. of results for blanks [3]:	25,850	10.0%
No. of results for matrix spikes [3]:	16,116	6.2%
No. of results for Check samples [3]:	32,792	12.6%
No. of results for Replicates [3]:	27,647	10.6%
No. of results for surrogates [3]:	10,887	4.2%
Total QC analyses run [3] :	**113,292**	**43.6%**
Total in-house analyses completed [2]:	**256,558**	

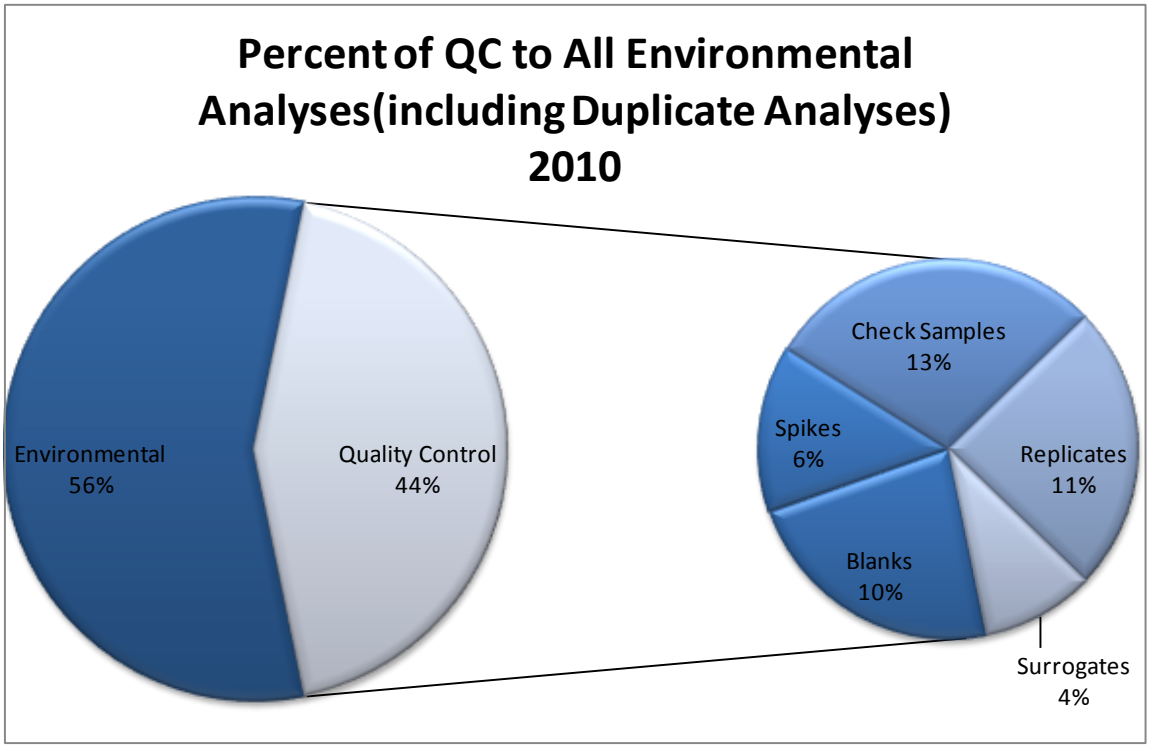

[1]- matrix spikes, replicates, surrogates are also part of the total for Customer/ Environmental samples.

[2] - as of March 19, 2009.

[3] percent of QC samples calculated from grand total (264,297 analyses).

NOTE: Analysis, for the purposes of the metrics used in this report generally refer to each analyte determined in each sample in a batch. For example, an analysis(determination) of several metals in a sample (e.g. iron, nickel, lead) would total as 3 analyses in the expression of totals such as those in the Analyses table on the preceding page. This method of calculation has been used for many years and, with batch and method, is useful comparative measure of laboratory performance and is one of the fundamental constants in applying quality control measures.

	No. of Batches	Percent of total
Total number of analytical batches:	**13,833**	
Total number of rejected analytical batches:	**20**	**0.14%**
Incomplete batches (as of Feb 2, 2010):	**17**	**0.12%**

Outside laboratories

A small number of permit required analyses are sub-contracted out, including gross alpha- & Beta- radiation, and Total Organic Carbon in wastewater as summarized below. Herbicides analysis previously performed in-house were subcontracted to Cal Science Environmental Laboratories via CRG Marine.

Outside Laboratory		Number of analyses
Frontier Analytical	Dioxin Furan Wastewater and Solids	1223
CRG Marine Laboratories	Herbicides	34
Test America	Gross alpha- and Beta-radiations, Dioxins	440
Water Quality, City of San Diego	Total Organic Carbon and Nutrients	96
	total:	**1793**

QA Plan:
The Quality Assurance Plan was updated in April 2010.

Performance Testing (PT) Studies for 2010:
The Wastewater Chemistry Laboratories participates in required ELAP and U.S.EPA PT studies throughout the year. We participated in 8 PT studies in 2010. Each of our geographically separated laboratory facilities participated individually (as required by ELAP). All PT studies were purchased from ERA and were successfully completed. When results submitted were determined to be outside of study acceptance limits the laboratory reviewed internal protocols, modified procedures were necessary and participated in a subsequent study for the analytes in question. A PT study was completed with satisfactory results for all analytes by in-house chemistry laboratories.
The results of the Laboratory PT studies for 2010 are summarized in the following tables.

DMRQA (Discharge Monitoring Report – Quality Assurance)
We also participate as dischargers in the EPA DMRQA[9] Studies required by the NPDES permit monitoring for the following two WWTP:

- Pt. Loma Wastewater Treatment Plant (PLWWTP), NPDES Permit No. R9-2009-0001
- South Bay Water Reclamation Plant (SBWRP), NPDES Permit No.CA0109045/ Order No. 2006-067.

In both cases, we participated in DMRQA Study 30 as issued by Environmental Resource Associates. All methods and analytes were within acceptance limits with the exception of Test Code 42 (Mysid 48-h acute non-renewal FSW) Toxicity Bioassay. A thorough review of all laboratory practices and records showed that all pertinent procedures were followed by the City's Toxicology Laboratory, and the concurrently tested AQC sample (i.e. remedial sample), which was also supplied by ERA, performed well within the acceptable range. Consequently, a member of the City's supervisory staff contacted ERA's DMRQA WET coordinator and discovered that, unlike the AQC sample which had an *a priori* fixed 'assigned value,' the assigned value and 'acceptable range' for the DMRQA were determined *post hoc* using data from each year's cohort of participating laboratories. Moreover, the historical coefficient of variation (CV) for Test Code 42 among all laboratories averaged around 50%. However, among this year's 27 participating laboratories, the CV was only 10.8%, which significantly reduced the acceptable range for the median lethal concentration (LC_{50}) and thereby rendered the City's finding of an LC_{50} of 41.4% slightly above the upper acceptance limit of 40.2%. Based on the exceptionally low inter-laboratory variability observed in Test Code 42, the City respectfully submits that the original

[9] DMRQA = Discharge Monitoring Reporting Quality Assurance; an EPA program of performance testing for discharge monitoring laboratories for NPDES permit analytes.

ERA Study	Number of Analytes	Number of Acceptable results	Success Rate (%)
DMRQA-30, PLWWTP	29	28	96.3%
DMRQA-30, SBWRP	28	27	96.7%
Total analytes:	57	**Overall:**	96.5%

Alvarado Wastewater Chemistry Laboratory:

ERA Study	Number of Analytes	Number of Acceptable results	Success Rate (%)
SOIL-70	110	110	100%
SOIL-71	42	42	100%
WP-182	1	1	100%
WP-183	40	40	100%
WP-184	58	58	100%
WP-185	58	58	100%
WP-186	11	11	100%
WP-187	2	2	100%
Total analytes:	382	**Overall:**	100%

North City Chemistry Laboratory

ERA Study	Number of Analytes	Number of Acceptable results	Success Rate (%)
WP-183	14	13	92.9%
WP-186	1	1	100%
Total analytes:	15	**Overall:**	93.3%

Metro Biosolids Center (MBC) Chemistry Laboratory

ERA Study	Number of Analytes	Number of Acceptable results	Success Rate (%)
WP-184	5	5	100%
Total analytes:	5	**Overall:**	100%

Pt. Loma Wastewater Chemistry Laboratory

ERA Study	Number of Analytes	Number of Acceptable results	Success Rate (%)
WP-182	18	18	100%
Total analytes:	18	**Overall:**	100%

South Bay Wastewater Chemistry Laboratory

ERA Study	Number of Analytes	Number of Acceptable results	Success Rate (%)
WP-183	15	15	100%
Total analytes:	15	**Overall**	100%

E. Staff Contributing to this Report (2010)

Initials	ID	First Name	Last Name	Signature
BOA	BOA	Ben	Andoh	
TB	TSB	Tan	Bao	
VB	VEB	Virginia	Basilan	
EB	BTX	Enrique	Blanco	
BGB	N8B	Brent	Bowman	
TB	TMB	Tom	Burger	
DC	DVC	Doug	Campbell	
JC	G3C	Jose	Castro	
JCM	U8C	Jacqueline	Cazares-Medina	
EC	CYU	Eric	Clark	
NC	NLC	Nancy	Coglan	
MC	M5C	Maricela	Coronel	
JCM	G8C	Jerry	Czajkowski	
KD	KOD	Ken	Dang	
HHD	HZD	Heather	Duckett	
ACD	AD4	Angelica	Duran	
JTF	JRF	Jeff	Findley	
KG	KG3	Kenneth	Genz	
RJ	RCJ	Ron	Jardine	
LK	LNK	Lee	King	
VK	VK4	Vesselka	Kozarev	
EL	EVL	Estela	Lanez	
WL	WL7	Wendy	Lucero	
FAM	FMN	Farid	Malof	
AM	M5U	Armando	Martinez	
FM	YBM	Fernando	Martinez	
CGM	M4M	Connie	Mata	
FML	IZM	Francisco	Meza	
JM	G7M	Jeff	McAnally	
AM	AM9	Alejandra	Molloy	
JN	IEN	Jesus	Nieto	
MN	MGZ	Maria	Noller	
LP	LJP	Lorena	Pantoja	
LP	LXP	Leonard	Przybylo	
CAQ	CQ5	Corinna	Quinata	
KR	KRV	Keith	Ruehrwein	
VS	VS7	Victoria	Santibanez	
RS	NDS	Robert	Sandoval	
DWS	DXS	David	Schlickman	
GS	GTS	Greg	Schlimme	
GLS	HIR	Gloria	Siqueiros	
MRS	MWS	Michael	Stewart	
MIS	S49	Margot	Szeterlak	
SV	SCV	Sandra	Valenzuela	
JW	AIW	Julie	Webb	
KLW	KLW	Kristof	Witczak	

Figure 1. Chemistry Laboratory Organization Chart. (2010)

Metropolitan Wastewater Department

Environmental Monitoring and Technical Services Division

Wastewater Chemistry Laboratory

Deputy Director
Steve Meyer

Senior Chemist *1.00*
Vacant

Pesticides/ Wet Chemistry Group *Associate Chemist 1.00* JEFF MCANALLY	***QA/DM Group*** *Associate Chemist 1.00* BRENT BOWMAN	***Metals Group*** *Associate Chemist 1.00* DAVID SCHLICKMAN	***Pt. Loma WWTP Group*** *Associate Chemist 1.00* ROBERT SANDOVAL	***South Bay WRP Group*** *Associate Chemist 1.00* Vacant	***North Services Group*** *Associate Chemist 1.00* NANCY COGLAN	***GC/MS Group*** *Associate Chemist 1.00* DOUG CAMPBELL
Assistant Chemists: 7.00 TAN BAO KEN DANG MARIA NOLLER SANDRA VALENZUELA JACQUELINE CAZARES- MEDINA HEATHER DUCKETT MICHAEL STEWART	*Assistant Chemists: 3.00* LEE KING TOM BURGER ARMANDO MARTINEZ	*Assistant Chemists: 6.00* BEN ANDOH JERRY CZAJKOWSKI JEFF FINDLEY JESUS NIETO LEONARD PRZYBYLO VESSELKA KOZAREV	*Assistant Chemists: 2.00* JULIE WEBB ENRIQUE BLANCO	*Assistant Chemists:2.00* GREG SCHLIMME FERNANDO MARTINEZ	*Assistant Chemists: 4.00* VIRGINIA BASILAN KRIS WITCZAK LORENA PANTOJA WENDY LUCERO	*Assistant Chemists: 4.00* FRANCISCO MEZA RONALD JARDINE GLORIA SIQUEIROS ESTELA LANEZ
Laboratory Technician: 1.00 ALEJANDRA MOLLOY	*Laboratory Technician: 2.00* KEITH RUEHRWEIN ERIC CLARK	*Laboratory Technician: 1.00* MARGOT SZETERLAK	*Laboratory Technician: 3.00* MARICELA CORONEL CONNIE MATA FARID MALOF	*Laboratory Technician: 2.00* JOSE CASTRO Vacant	*Laboratory Technician: 2.00* ANGELICA DURAN KENNETH GENZ	*Laboratory Technician: 1.00* VICTORIA SANTIBANEZ
Intern:	*Word Processing Operator: 1.00* CORINNA QUINATA *Intern:*	Intern:				

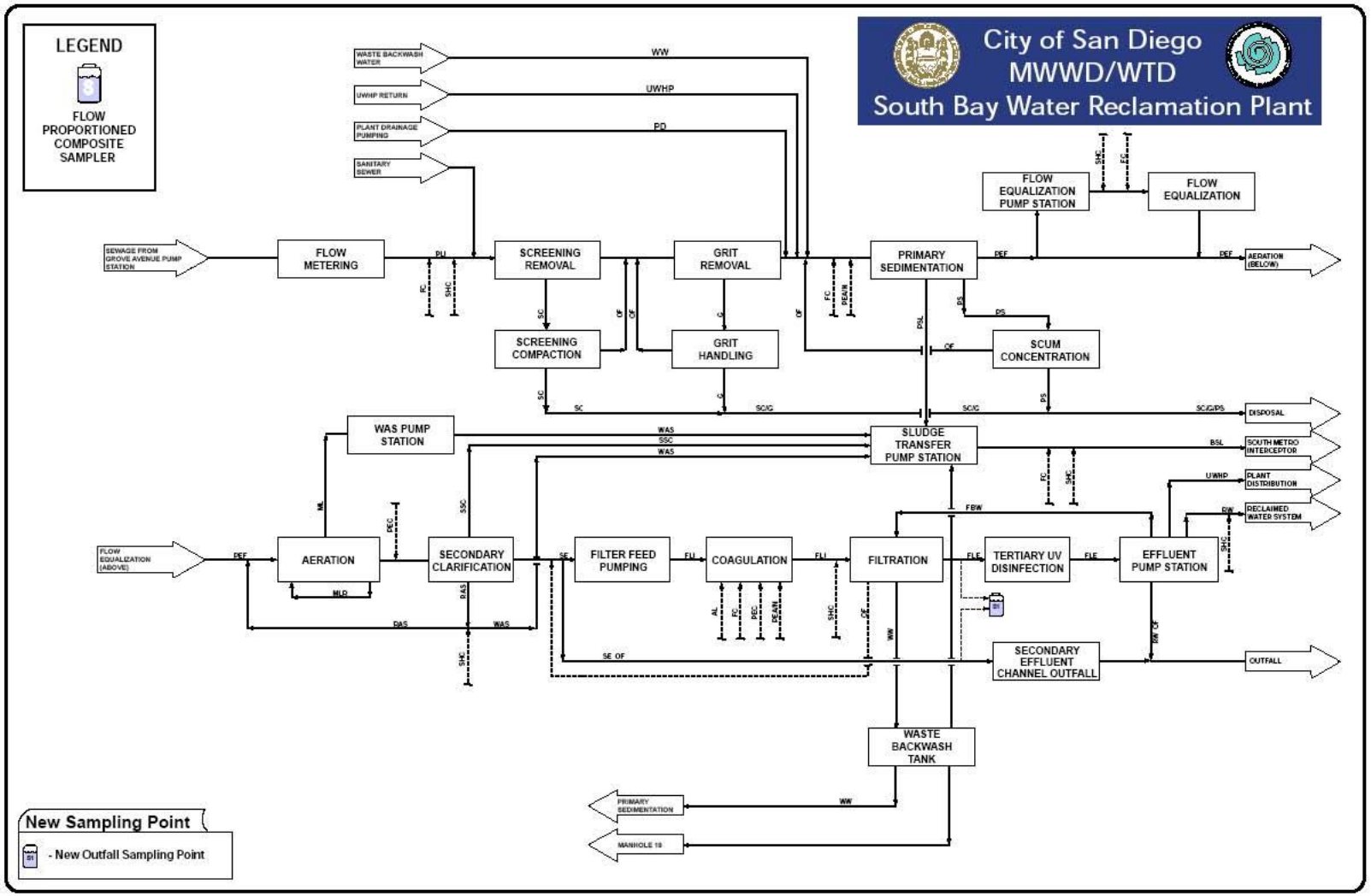

Figure 1 - New Effluent to Ocean Outfall Sample Point

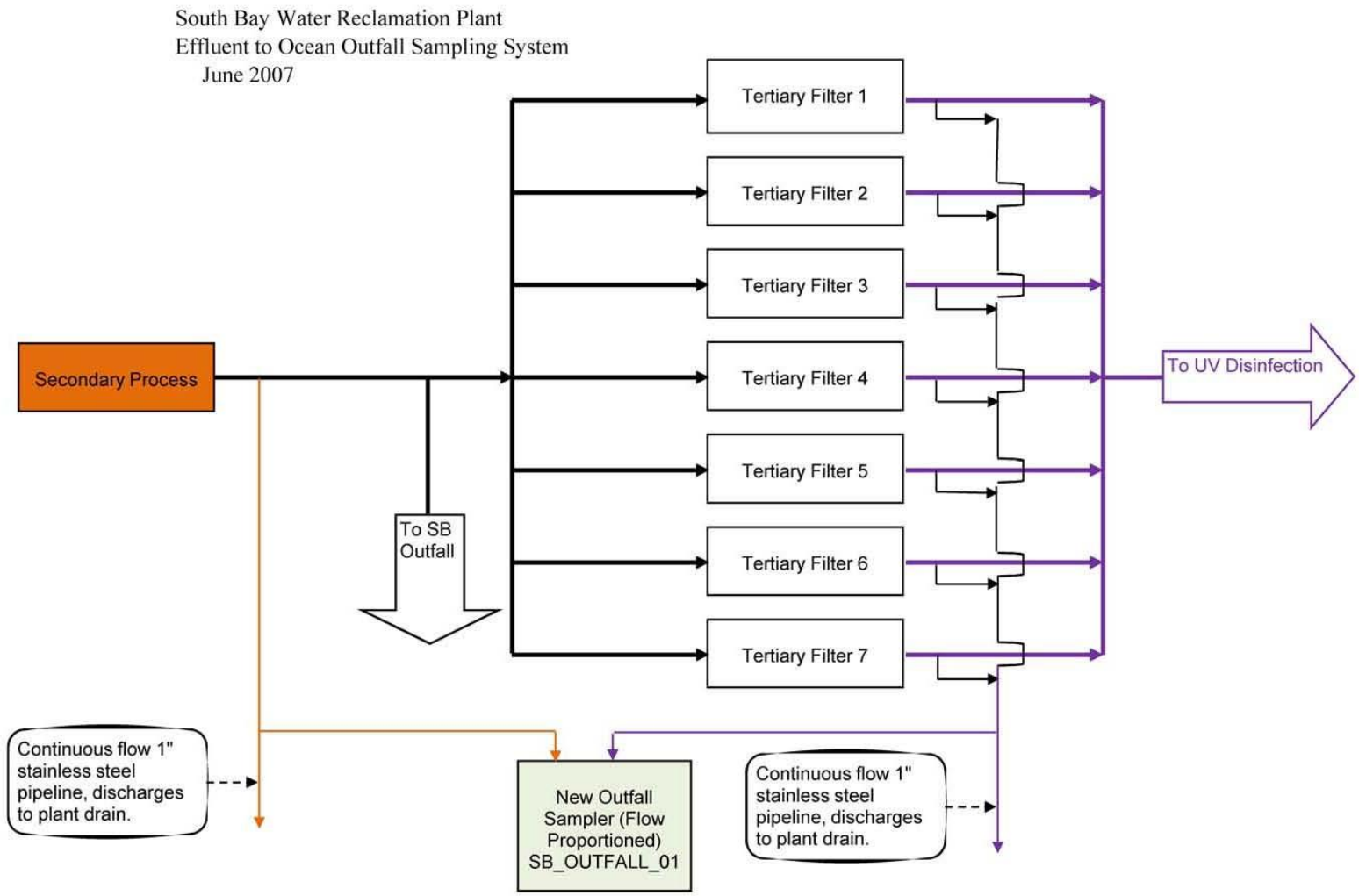

Figure 2 - Detail of Effluent Sampling System

This page left blank intentionally