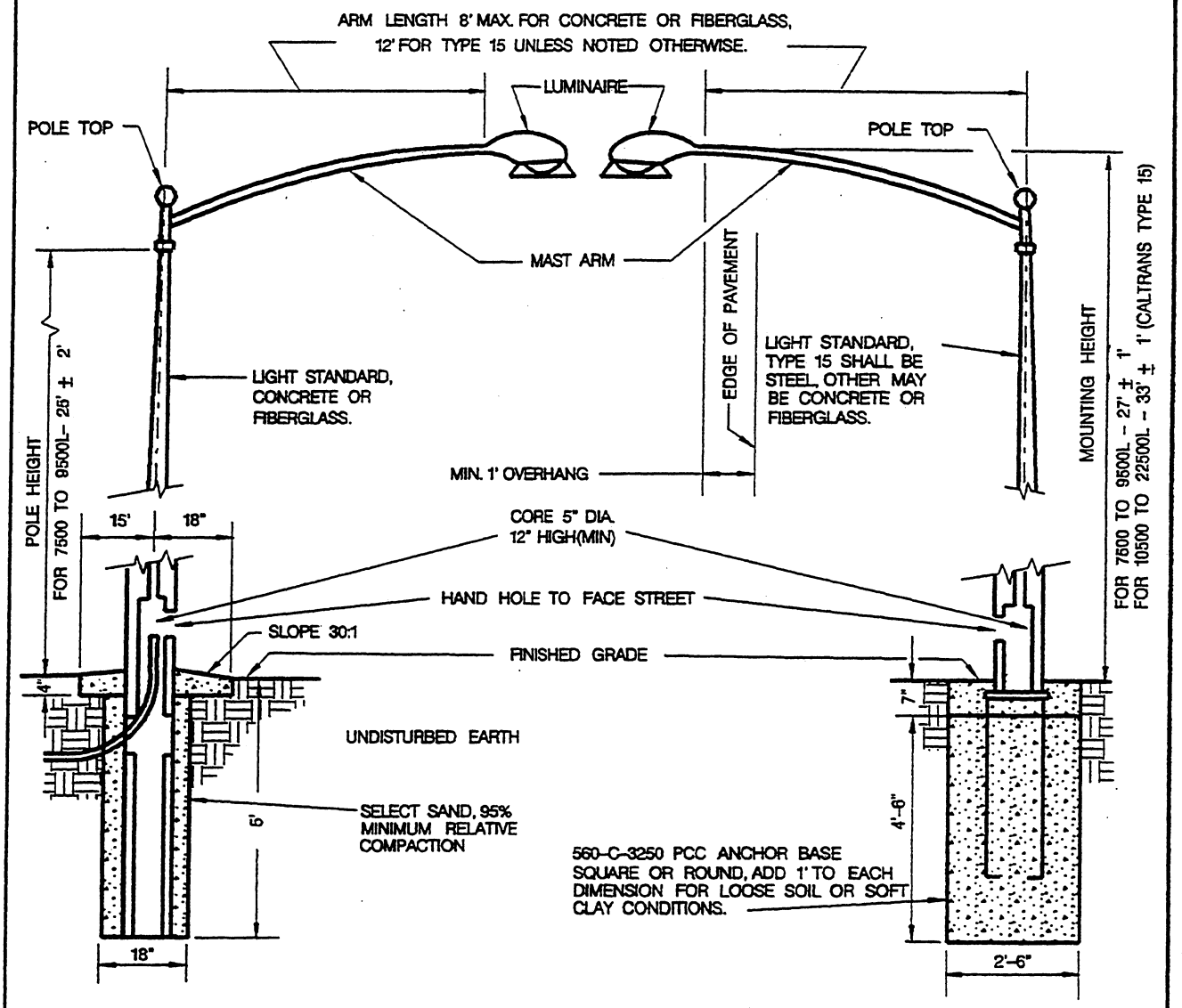

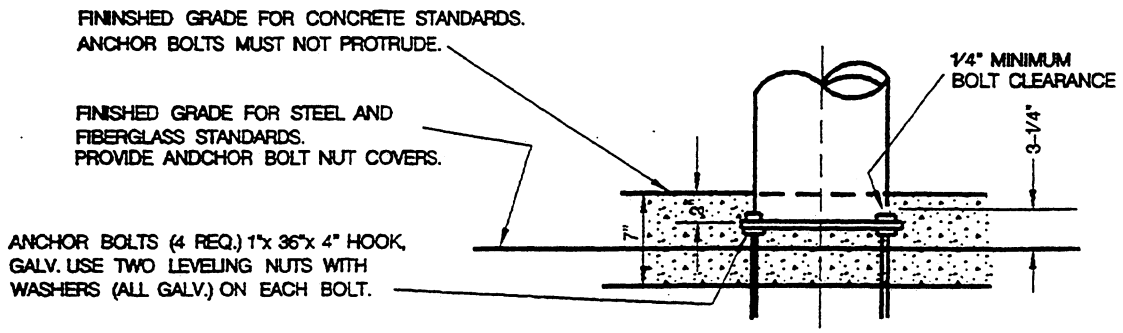

Revision	By	Approved	Date
ORIGINAL		J.P.Casey	6-3-83

CITY OF SAN DIEGO - STANDARD DRAWING

CITY OF SAN DIEGO STANDARDS COMMITTEE

COORDINATOR R.C.E. 25902 — 2-7-95 DATE

STREET LIGHTING STANDARD

DRAWING NUMBER **SDE-101**

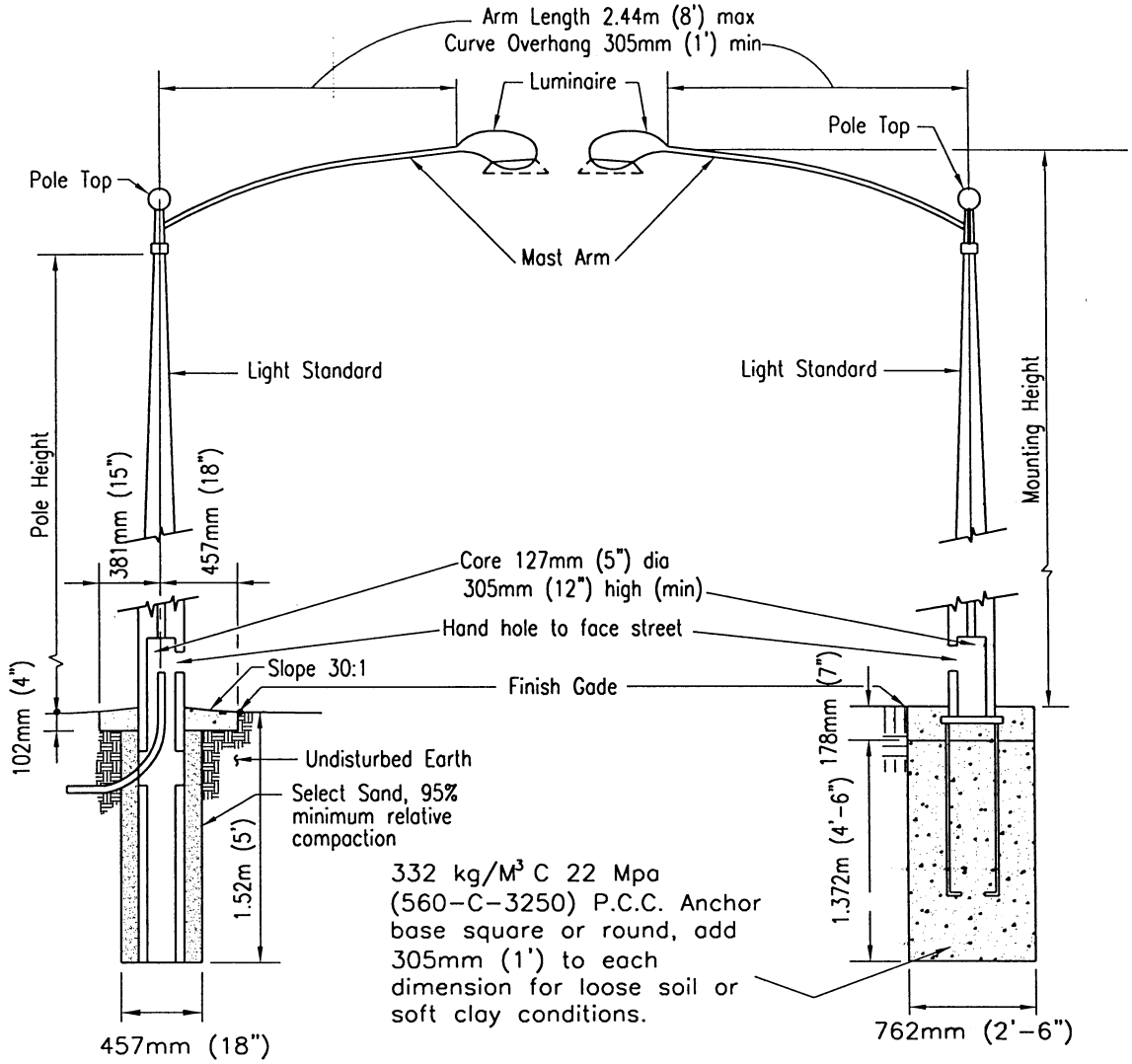

332 kg/M³ C 22 Mpa (560-C-3250) P.C.C. Anchor base square or round, add 305mm (1') to each dimension for loose soil or soft clay conditions.

DIRECT BURIAL FOUNDATION

ANCHOR BASE FOUNDATION

POLE HEIGHT	MOUNTING HEIGHT	LAMP SIZE (WATTS)
7.62m ±610mm 25' ±2'	8.23m ±305mm 27' ±1'	170 M.V. 100 H.P.S. 90 L.P.S.
8.53m ±610mm 28' ±2'	9.14m ±305mm 30' ±1'	400 M.V. 250 H.P.S. 180 L.P.S.
7m 23' -0"	8.15m 26' -9"	70 H.P.S.
8.1m 26' -6"	9.14m 30' -0"	150 H.P.S.

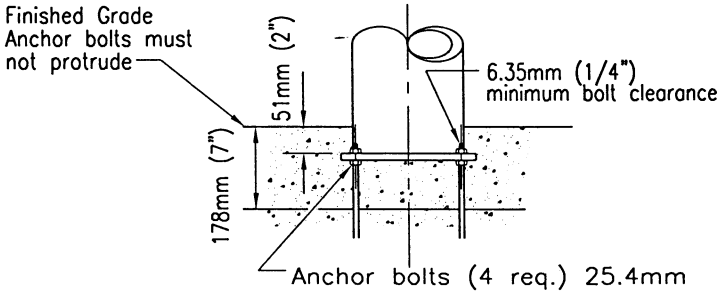

Anchor bolts (4 req.) 25.4mm x 914mm x 102mm (1"x36"x4") hook, galvanized. Use two leveling nuts with washers (all galv.) on each bolt.

Revision	By	Approved	Date
ORIGINAL		Kercheval	12/75
Add Table		M. Bahmanian	05/86
Add Metric		T. Stanton	03/03
Reviewed		T. Stanton	04/06

SAN DIEGO REGIONAL STANDARD DRAWING

STREET LIGHTING STANDARD

RECOMMENDED BY THE SAN DIEGO REGIONAL STANDARDS COMMITTEE

3/10/2003

Chairperson R.C.E. 19246 Date

DRAWING NUMBER **E-1**

SEE SDE-101

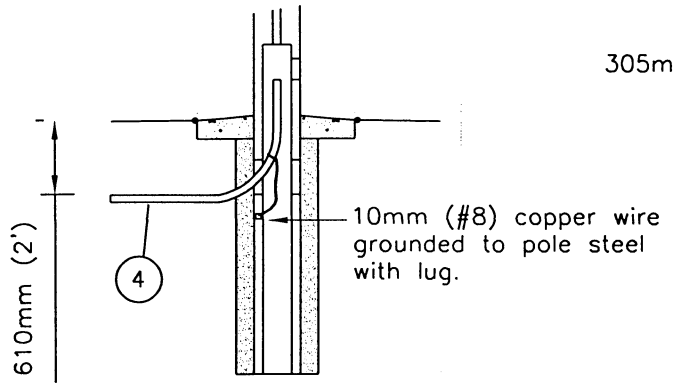

STEEL CONDUIT

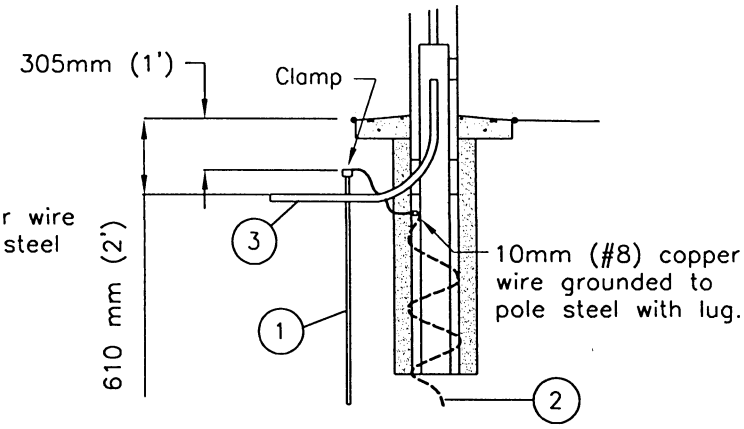

NON–METALLIC CONDUIT

DIRECT BURIAL FOUNDATION

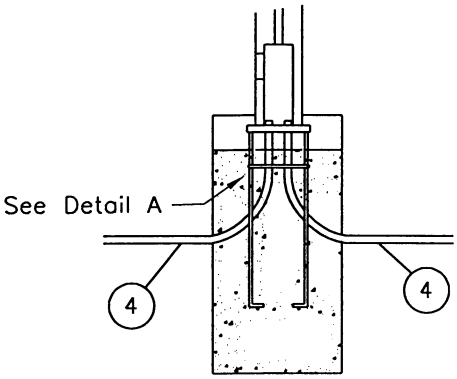

STEEL CONDUIT

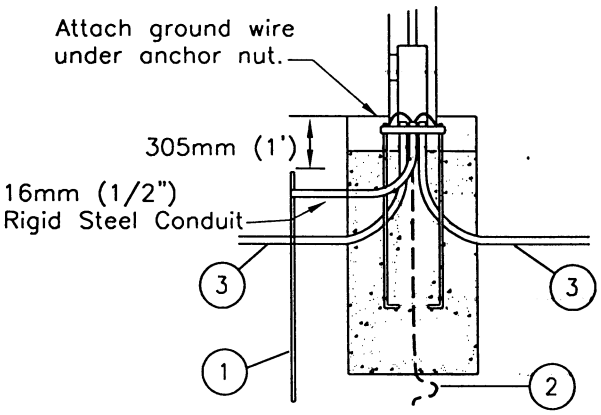

NON–METALLIC CONDUIT

ANCHOR BASE FOUNDATION

(1) 19mm x 2.4m (3/4" x 8') copper covered steel ground rod.

(2) Alternate Ground: 4.57m (15') 35mm (no. 4) stranded copper wire, coiled.

(3) Approved non–metallic conduit.

(4) Steel conduit.

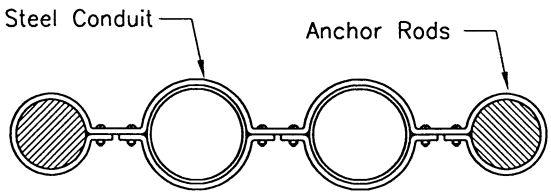

DETAIL A

Revision	By	Approved	Date
ORIGINAL		Kercheval	12/75
Add Metric		T. Stanton	03/03
Reformatted		T. Stanton	04/06

SAN DIEGO REGIONAL STANDARD DRAWING

GROUNDING OF CONCRETE LIGHTING STANDARDS

RECOMMENDED BY THE SAN DIEGO REGIONAL STANDARDS COMMITTEE

T. Stanton 3/10/2003

Chairperson R.C.E. 19246 Date

DRAWING NUMBER E-2

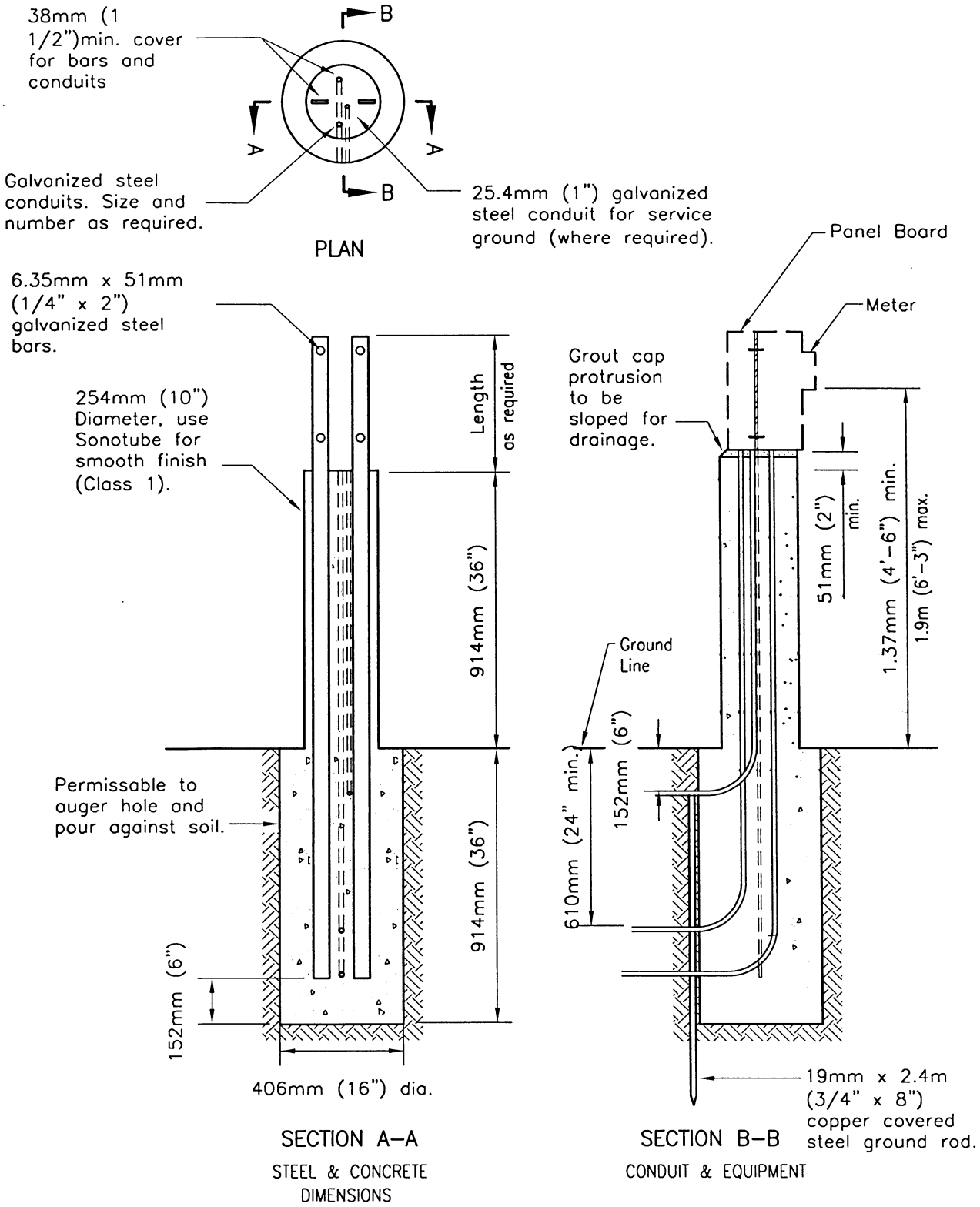

NOTE: Concrete shall be class 332 kg/M^{3}C 22 Mpa (560–C–3250)

Revision	By	Approved	Date
ORIGINAL		Kercheval	12/75
Add Metric		T. Stanton	03/03
Reviewed		T. Stanton	04/06

SAN DIEGO REGIONAL STANDARD DRAWING

PEDESTAL FOR ELECTRICAL EQUIPMENT

RECOMMENDED BY THE SAN DIEGO REGIONAL STANDARDS COMMITTEE

T. Stanton 3/01/2003

Chairperson R.C.E. 19246 Date

DRAWING NUMBER **E-33**