Book 2

Guidelines and Standards

Facility Design Guidelines

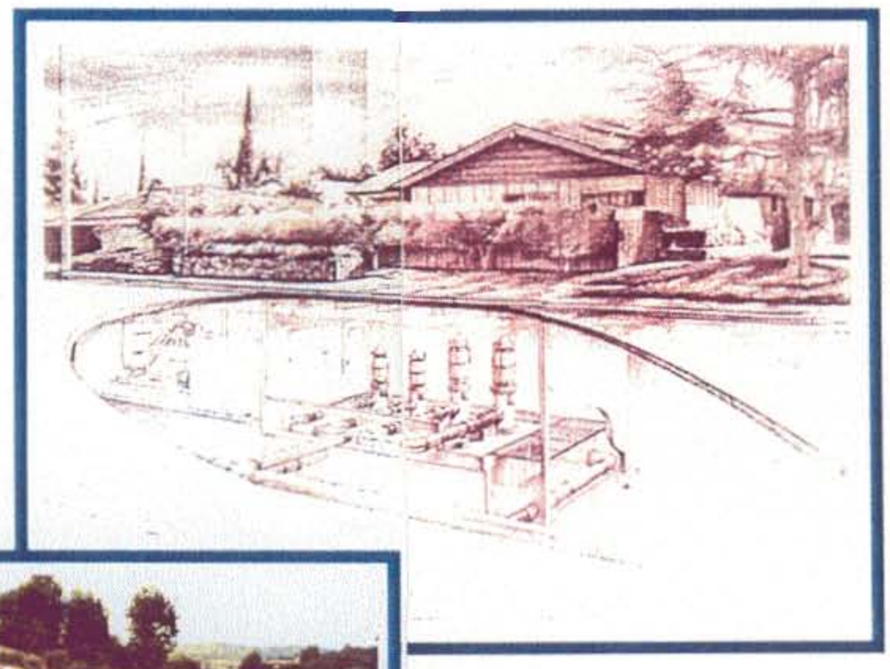

City of San Diego Water Department
Capital Improvements Program

BOOK LISTING

Book 1	General Design Guidelines
Book 2	Facility Design Guidelines
Book 3	Standard and Guide Details
Book 4	Standard and Guide Specifications
Book 5	CADD Standards
Book 6	Construction Management Guidelines
Book 7	Recycled Water System Guidelines

PREFACE

This Guidelines and Standards Book contains information to assist planners and engineers with the design and construction of water facilities. The City's intent is to ensure uniformity of design concepts, formats, methodologies, procedures, construction materials, types of equipment and quality of work products. These standards have been produced and adopted to encourage exceptional quality while using current technology for all Water Department facilities.

These Guidelines and Standards are not a substitute for good engineering. Sound judgement must be exercised in all applications to create quality and cost efficient facilities.

Water Department management encourages the creation of relationships between project stakeholders that promotes engineering excellence and timely completion of projects. City staff and consultants are encouraged to take the time at the beginning of all projects to identify common goals, common interests, lines of communication, and a commitment to cooperative problem solving.

LARRY GARDNER
Water Department Director

Issue No.

Water CIP Guidelines and Standards

BOOK 2

FACILITY DESIGN GUIDELINES

Revision Table

Chapter	Initial Issue	Revised Dates				
1	July 1999	November 2002				
2	July 1999	November 2002	July 2004			
3	July 1999	November 2002				
4	July 1999					
5	July 1999	November 2002				
6	July 1999	November 2002				
7	July 1999	January 2004				
8	November 2002					

Table of Contents

Chapter 1 -— Introduction to Facility Design Guidelines

1.1 Purpose and Use of Facility Design Guidelines 1-1

1.2 Units of Measurement 1-2

Chapter 2 -— Water Demands and Service Criteria

2.1 General 2-1

2.2 Service Area 2-1

2.3 Land Use and Residential Population 2-1

2.4 Average Annual Water Demands 2-2

2.5 Peak Water Demands 2-2

2.6 Fire Demands 2-6

2.7 Pressure Criteria 2-6
- 2.7.1 Design Pressures 2-6
- 2.7.2 Operating Pressures 2-7
- 2.7.3 Pressure Requirements During Fires 2-7

2.8 System Reliability 2-7

2.9 Storage Criteria 2-9
- 2.9.1 Regulating Reservoirs 2-9
- 2.9.2 Forebays 2-12
- 2.9.3 Clearwells 2-12

Chapter 3 -— Transmission and Distribution Pipelines

3.1 General 3-1

3.2 Project Presentation 3-1
- 3.2.1 Preliminary Alignment 3-1
- 3.2.2 Contract Specification 3-2
- 3.2.3 Contract Drawings 3-2

3.3 Sizing, Alignment and Easements 3-2
3.3.1 Sizing and Alignment Criteria 3-2
3.3.2 Pipeline Profile Criteria 3-3
3.3.3 Easements....3-4

3.4 Pipeline Materials, Linings, and Coatings 3-5
3.4.1 Materials....3-5
3.4.2 Linings and Coatings 3-6
3.4.3 Cathodic Protection 3-7

3.5 Valves, Appurtenances and Structures....3-7
3.5.1 Valves....3-7
3.5.2 Appurtenances 3-10
3.5.3 Appurtenance Structures....3-21

3.6 Fittings 3-24
3.6.1 Iron Fittings....3-24
3.6.2 Steel Fittings....3-24
3.6.3 PVC Fittings....3-25

3.7 Joints for Steel Transmissions Lines....3-25
3.7.1 Joint Welds....3-25

3.8 Bedding, Backfill, Cover and Surface Restoration 3-26
3.8.1 Bedding 3-26
3.8.2 Trench Backfill....3-26
3.8.3 Cover....3-27
3.8.4 Surface Restoration....3-27

3.9 Pipe Design 3-27
3.9.1 External Loads....3-27
3.9.2 Internal Pressure 3-28
3.9.3 Design Procedures 3-28

3.10 Hydraulic and Surge Analysis 3-30
3.10.1 Hydraulic Analysis 3-30
3.10.2 Surge Analysis....3-30

3.11 Thrust Restraint 3-31
3.11.1 Thrust Restraint Systems 3-31

3.12 Maintenance 3-32

3.13 Special Crossings 3-33
3.13.1 Coordination with Agencies 3-33
3.13.2 Bridge Crossings 3-34
3.13.3 Trenchless Construction....3-45

3.14 Pipe Trench Width and Handling 3-53
3.14.1 Field Control of Trench Width 3-54
3.14.2 Effect of Trench Width on Pipe Loading 3-54
3.14.3 Trenching....3-54

3.15 Communications 3-55

Chapter 4 -– Pressure Control Stations

4.1 Definition....4-1

4.2 Locations of Pressure Control Stations....4-1

4.3 Configuration and Sizing Criteria 4-2

4.4 Appurtenances....4-3

4.5 Materials 4-3

4.6 Instrumentation and Control....4-3

Chapter 5 -– Storage Facilities

5.1 General....5-1

5.2 Project Presentation....5-1
5.2.1 Basis of Design Report....5-1
5.2.2 Contract Specifications....5-1
5.2.3 Contract Drawings 5-2
5.2.4 Permits 5-2

5.3 Codes and Standards 5-2

5.4 Steel Tanks and Standpipes 5-3
5.4.1 Site Design Guidelines 5-3
5.4.2 Structural Guidelines 5-6
5.4.3 Mechanical Design Guidelines 5-12
5.4.4 Instrumentation and Control Guidelines....5-17
5.4.5 Cathodic Protection Guidelines 5-20
5.4.6 Electrical Guidelines 5-20
5.4.7 Architectural and Landscaping Guidelines....5-24
5.4.8 Storage Facility Construction, Filling, Disinfection and Testing 5-24

5.5 Reinforced Concrete Storage Facilities....5-25
5.5.1 Site Design Guidelines 5-25

5.5.2 Structural Guidelines 5-26
5.5.3 Mechanical Design Guidelines 5-32
5.5.4 Instrumentation and Control Guidelines....5-34
5.5.5 Cathodic Protection Guidelines 5-34
5.5.6 Electrical Guidelines 5-34
5.5.7 Architectural and Landscaping Guidelines....5-35
5.5.8 Storage Facility Construction, Filling, Disinfection, and Testing 5-35

5.6 Demolition of Existing Storage Facilities 5-35

5.7 Rehabilitation of Existing Storage Facilities 5-35

Chapter 6 -– Pumping Stations

6.1 General 6-1

6.2 Project Document Presentation 6-1
6.2.1 Basis of Design Report Drawings 6-1
6.2.2 Contract Specifications 6-2
6.2.3 Contract Drawings 6-2

6.3 Codes and Standards 6-2

6.4 Pumping Station Hydraulics and Piping 6-3
6.4.1 Station Hydraulics....6-3
6.4.2 Piping Materials 6-4
6.4.3 Flow Velocities....6-4
6.4.4 Bolts and Fasteners for Piping....6-4
6.4.5 Dissimilar Metal/Isolation Connections 6-4
6.4.6 Fittings for Differential Settlement....6-4
6.4.7 Schedule of Pumping Station Piping Materials 6-5

6.5 Selection of Main Pumping Units 6-5
6.5.1 General....6-5
6.5.2 Selecting the Type of Units....6-5
6.5.3 Horizontal Split Case Pumps 6-5
6.5.4 Vertical Turbine Pumps 6-6
6.5.5 Pump Operating and System Head Curves....6-7
6.5.6 Vibration and Cavitation....6-10
6.5.7 Net Positive Suction Head (NPSH)....6-10
6.5.8 Pump Motors 6-10
6.5.9 Variable Frequency Drives 6-11
6.5.10 Hydropneumatic Tank/Surge Tank (Special Station Requirements)....6-11
6.5.11 Pump Base Plate Installation....6-12
6.5.12 Spare Parts and Manuals to be Supplied 6-12

6.6 Pumping Equipment Layout....6-12

6.7 Pump Inlet Configuration and Piping Layout 6-13
6.7.1 Pump Inlet Configuration for Vertical Turbine Pumps 6-13
6.7.2 Pump Inlet Configuration Horizontal Pumps 6-13
6.7.3 Pump Discharge Header Configuration Vertical Turbine Pumps 6-13
6.7.4 Pump Discharge Header Configuration Horizontal Pumps 6-13
6.7.5 Relief/Bypass Line to Suction (Special Station Requirement) 6-14
6.7.6 Bypass Line to Discharge (Special Station Requirement) 6-14
6.7.7 Discharge Piping Assembly 6-14
6.7.8 Pipe Restraints 6-14
6.7.9 Couplings 6-14
6.7.10 Pressure Gauges 6-15

6.8 Expandability 6-15

6.9 Standby Pumps and Equipment 6-16

6.10 Transient Surge Analysis and Surge Control 6-16
6.10.1 Transient Surge Analysis 6-16
6.10.2 Surge Control 6-16

6.11 Valves 6-17
6.11.1 General 6-17
6.11.2 Isolation Valves 6-18
6.11.3 Pump Control Valves 6-18
6.11.4 Air/Vacuum Relief Valves 6-18
6.11.5 Drain Valves 6-19
6.11.6 Check Valves 6-19
6.11.7 Corporation Stops for Flow Meters 6-19
6.11.8 Valve Actuators 6-19

6.12 Structural Guidelines 6-20
6.12.1 Reference Standards and Codes 6-20
6.12.2 Design Loads 6-21
6.12.3 Loading Combinations 6-25
6.12.4 Allowable Stresses 6-25
6.12.5 Structural Design Requirements 6-26
6.12.6 Detailing 6-30
6.12.7 Major Element Design Requirements 6-30

6.13 Sitework 6-32
6.13.1 Site Constraints 6-32
6.13.2 Construction Sequencing 6-33
6.13.3 Site Utilities 6-33
6.13.4 Access and Parking 6-33
6.13.5 Security 6-33
6.13.6 Site Lighting 6-34
6.13.7 Landscaping 6-34

6.14 Station Support Systems 6-35

6.14.1 Ventilation 6-35
6.14.2 Overhead Hoist 6-36
6.14.3 Water Supply and Toilet Facilities 6-36
6.14.4 Instrument Air 6-37
6.14.5 Pump Room Drainage System 6-37
6.14.6 Fire Extinguisher 6-37

6.15 Instrumentation and Controls 6-37
6.15.1 Pump Control Description 6-37
6.15.2 Pressure Control of Pumps 6-38
6.15.3 VFD Pump Control 6-38
6.15.4 Pumping Station Surge Control 6-38
6.15.5 Level Control of Pumps 6-39
6.15.6 Level Control Pump Sequence 6-39
6.15.7 Typical Level Control Sequence 6-39
6.15.8 Flow Measurement and Pressure Instrumentation 6-40
6.15.9 Control Panel Pump Selector Switches 6-40
6.15.10 Control Panel Operator Interface 6-41
6.15.11 Pump Station Telemetry 6-41

6.16 Electrical Design and Emergency Power 6-41
6.16.1 Electrical Design Work 6-41
6.16.2 Codes and Standards 6-41
6.16.3 Electrical Service and Distribution 6-42
6.16.4 Electrical Equipment 6-43
6.16.5 Grounding 6-44
6.16.6 Instrument Power 6-44
6.16.7 Emergency Power 6-44
6.16.8 Lighting 6-45
6.16.9 Receptacles 6-45
6.16.10 Electrical Equipment Room 6-45

6.17 Architectural Treatment 6-46
6.17.1 Design Performance Guidelines 6-46
6.17.2 Design Appearance Guidelines 6-47
6.17.3 Site Constraints 6-49
6.17.4 Space and Function Requirement Program 6-49
6.17.5 Program Review and Approval 6-49
6.17.6 Building Design 6-49
6.17.7 Construction Documents 6-50

6.18 Corrosion Control 6-50
6.18.1 Protective Coatings and Linings 6-50
6.18.2 Materials Considerations 6-50
6.18.3 Cathodic Protection 6-51

6.19 Noise Control 6-51
6.19.1 General 6-51
6.19.2 Design Phase 6-51

6.19.3 Preconstruction Phase....6-52
6.19.4 Maintenance Considerations....6-52

6.20 Pumping Station Operational Testing Facility Acceptance....6-52
6.20.1 Operational Test Procedures....6-52
6.20.2 Contractor Testing and Equipment Certifications....6-52

Chapter 7 -— Corrosion Control Design Criteria

7.1 Introduction....7-1

7.2 Protective Coatings and Linings....7-1
7.2.1 Linings....7-1
7.2.2 Coatings....7-4
7.2.3 Welded Steel Tanks and Reservoirs....7-5

7.3 Materials Selection....7-6
7.3.1 General Exposures....7-6
7.3.2 Material Considerations....7-6

Chapter 8 -— Seismic Criteria

8.1 General....8.1
8.1.1 Purpose....8-1
8.1.2 Intent....8-1
8.1.3 Applicability....8-1
8.1.4 Facility Importance and Performance Goals....8-2
8.1.5 Reference Codes and Standards....8-3
8.1.6 Symbols and Notation....8-4

8.2 Site Criteria....8-6
8.2.1 Regional Faults and Seismicity....8-7
8.2.2 Ground Fault Rupture....8-9
8.2.3 Ground Shaking....8-11
8.2.4 Liquefaction-Related Phenomena....8-22
8.2.5 Landsliding....8-24
8.2.6 Seiches and Tsunamis....8-25

8.3 Buildings and Building-Like Structures....8-25
8.3.1 Applicability....8.25
8.3.2 Design Basis....8-26
8.3.3 Design Force Levels....8-26
8.3.4 Special Detailing Requirements....8-26
8.3.5 Inspection Criteria....8-30

8.4 Underground Piping 8-30
8.4.1 Failure Mechanisms 8-30
8.4.2 General Design Guidelines 8-30
8.4.3 Fault Crossing Design Guidelines 8-33

8.5 Underground Structures 8-34
8.5.1 Loading Criteria 8-34
8.5.2 Detailing 8-36

8.6 Water Retention Structures 8-36
8.6.1 Flat Bottom Steel Tanks and Standpipes 8-36
8.6.2 Prestressed Concrete Tanks 8-40
8.6.3 Water Retention Basins 8-42
8.6.4 Internal Structures 8-42

8.7 Reservoir Outlet Towers 8-45

8.8 Pumping Plants 8-46

8.9 Equipment 8-46
8.9.1 General 8-46
8.9.2 Vulnerabilities 8-46
8.9.3 Equipment Anchorage 8-48
8.9.4 Anchorage 8-49
8.9.5 Functional Qualification 8-50
8.9.6 Above Ground Piping, Raceways, Conduits and HVAC Ducts 8-50

8.10 Existing Facilities 8-51
8.10.1 Additions, Alterations, and Change of Function 8-51
8.10.2 Assessment Criteria 8-51
8.10.3 Retrofit Design Criteria 8-52

8.11 References 8-56

Plate 1 Fault Rupture and Liquefaction Hazards 8-58

Plate 2 1997 UBC Representation of Active Fault Near-Source Zones 8-59

Plate 3 Landslide Hazards 8-60

Book

2

Facility Design Guidelines

Chapter 1
Introduction to Facility Design Guidelines

City of San Diego Water Department
Capital Improvements Program

Chapter 1
INTRODUCTION TO FACILITY DESIGN GUIDELINES

This book provides guidelines for estimating water demands, establishing service criteria, and designing pipelines, pressure control facilities, storage facilities, and pumping stations to be built as part of the Water CIP.

These Guidelines are presented in seven chapters in this Book 2:

- **Chapter 2** - Water Demands and Service Criteria
- **Chapter 3** - Transmission and Distribution Pipelines
- **Chapter 4** - Pressure Control Stations
- **Chapter 5** - Storage Facilities
- **Chapter 6** - Pumping Stations
- **Chapter 7** - Corrosion Control Design Criteria
- **Chapter 8** - Seismic Criteria

Chapters 3, 4, 5, and 6 include related guidelines for the following disciplines when appropriate:

- Civil
- Structural
- Architectural
- Electrical
- Instrumentation – PLC (programmable logic controllers)
- Heating, Ventilating, and Air Conditioning
- Mechanical – Equipment
- Mechanical – Piping
- Hydraulics

1.1 Purpose and Use of Facility Design Guidelines

The purpose of these Guidelines is to identify general planning, predesign and design details and approaches to be used for the Water CIP. These Guidelines are intended to provide uniformity in key concepts, equipment types, and construction materials on facilities built under the Water CIP. These design Guidelines do not limit the responsibility of the DESIGN CONSULTANT, but assist in providing professionally sound, efficient, uniform, and workable facilities; whether pipelines, pressure control facilities, pumping stations, or storage facilities. Not all aspects of design are addressed in these Guidelines. In areas which are not addressed, the DESIGN CONSULTANT must use good engineering judgment and practices.

The DESIGN CONSULTANT incorporates the planning and design criteria presented in these Guidelines into the overall facilities design. Sometimes the criteria are given in ranges, in which case the final criteria is selected within the indicated range. In other cases, specific criteria have been given and are to be followed by the DESIGN CONSULTANT.

If the DESIGN CONSULTANT desires to deviate from the criteria presented in these Guidelines, the DESIGN CONSULTANT proposes such modifications, with justification, to the CIP Program Manager as described in Book 1, Chapter 1, Introduction.

If documents referenced in these Guidelines have been updated since the writing of the Guidelines, the DESIGN CONSULTANT should use the documents current at the time the design is initiated. Such document use should be referenced in writing to the CIP Project Manager.

All figures in the design Guidelines use Water CIP standard symbols and abbreviations as defined in Book 5, CADD Standards.

1.2 Units of Measurement

Units of measurement to be used in design calculations should conform to the United States system of measurement. Commonly used units and their abbreviations are listed in Table 1-1.

Table 1-1
Units of Measure

Parameter	Abbreviation
Flow/Discharges	
(United States) million gallons per day	mgd
(United States) gallons per minute	gpm
(United States) gallons per hour	gph (for chemicals only)
(United States) gallons per day	gpd
cubic feet per second	cfs
cubic feet per minute	cfm
pounds per day	lb/day
pounds per hour	lb/hr
standard cubic feet per minute	scfm (for gases only)
liters per second	lps
Volume	
(United States) gallons	gal
cubic inches	cu in
cubic feet	cu ft
cubic yards	cu yd
acre-feet	ac-ft
liter	l
milliliter	ml
cubic meters	m^3
Weight or Force	
ounce(s)	oz
pounds	lb
ton	ton
kilogram	kg
gram	g
milligram	mg
thousand pounds	kip
Length	
inches	in
feet/foot	ft
yards	yd
millimeter	mm
meter	m
micron	μ

Table 1-1
Units of Measure
continued

Parameter	Abbreviation
Area	
acres	ac
square yard	sq yd
square feet	sq ft
square inches	sq in
Velocity	
feet per second	fps
feet per minute	fpm
miles per hour	mph
revolutions per minute	rpm
Pressure	
feet of water	ft water
pounds per square inches	psi
pounds per square inches absolute	psia
pounds per square inches gage	psig
Power	
Kilowatts	kW
Horsepower	hp
Volts ac	Vac
Volts dc	Vdc
amperes	A
milliampere	mA
power factor	pf
frequency	Hz
Temperature/heat	
degrees Centigrade (Celsius)	°C
degrees Fahrenheit	°F
British Thermal Unit	Btu
Density	
pounds per cubic feet	pcf
pounds per gallon	lb/gal
kilograms per cubic meter	kg/m^3

Table 1-1
Units of Measure
continued

Parameter	Abbreviation
Concentration	
milligrams per liter	mg/l
parts per billion	ppb
parts per million	ppm
pounds per million gallons	$lb/10^6$ gal
pounds per gallon	lb/gal
pounds per cubic feet	pcf
Loadings	
pounds per square inch	psi
pounds per square feet	psf
gallons per day per square foot	gpd/sf
gallons per day per linear foot	gpd/ft
gallons per minutes per square foot	gpm/sf

Book 2

Facility Design Guidelines

Chapter 2
Water Demands and Service Criteria

City of San Diego Water Department
Capital Improvements Program

Chapter 2
WATER DEMANDS AND SERVICE CRITERIA

2.1 General

This chapter outlines planning procedures to estimate water demands and fire flows. Water system service requirements are also defined in terms of water pressure and reservoir storage.

2.2 Service Area

The DESIGN CONSULTANT defines the project's service area and identifies the pressure zones in which it is located. The Senior Civil Engineer in charge of either Water Planning and Project Development, or Planning and Development Review Water Review Section, approves the service area boundaries.

2.3 Land Use and Residential Population

The DESIGN CONSULTANT develops present and future land use maps for the service area to define the following land use categories: residential (by zone in accordance with Table 2-1), central business district, commercial and institutional, parks, hospitals, hotels, industrial, office, and schools.

The DESIGN CONSULTANT estimates the residential population in the service area based on present and future allowable land use. Unless more accurate population density estimates are available, the residential population in the service area is estimated based on the figures presented in Table 2-1.

Table 2-1
Residential Population Density

Zone	Dwelling Unit Density (dwelling unit/net acre)	Unit Density (persons/dwelling unit)	Population Density (persons/net acre)
A-1-10	0.1	3.5	0.4
A-1-5	0.2	3.5	0.7
A-1-1	1	3.5	3.5
R-1-40	1	3.5	3.5
R-1-20	2	3.5	7.0
R-1-10	4	3.5	14
R-1-5	9	3.5	32
R-2	14	3.2	45
R-2A	29	3.0	87
R-3	43	2.6	112
R-3A	73	2.2	161
R-4	109	1.8	196
R-4C	218	1.5	327

Dwelling unit density in Table 2-1 is based on net area. The net area is measured in acres, and is 80% of the gross area for each residential zone.

2.4 Average Annual Water Demands

For most projects, average annual water demands are determined based on the unit water demand criteria presented in Table 2-2.

Table 2-2
Unit Water Demands

Land Use Category	Unit Water Demand
Residential	150 gallons/person-day
Central Business District	6000 gallons/net acre-day
Commercial and Institutional	5000 gallons/net acre-day
Fully Landscaped Park	4000 gallons/net acre-day
Hospitals	22500 gallons/net acre-day
Hotels	6555 gallons/net acre-day
Industrial	6250 gallons/net acre-day
Office	5730 gallons/net acre-day
Schools	4680 gallons/net acre-day

Average annual water demands are calculated as the sum of: (1) the residential water demand, and (2) other water demands for each land use category as follows:

Residential Water Demand (gallons/day) = Residential Population x 150 gallons/person-day

Other Water Demand (gallons/day) = Land Use Area by Category (net acres) x Unit Water Demand for Each Land Use Category (gallons/net acre-day)

Average Annual Water Demand (gallons/day) = Residential Water Demand + Other Water Demands

On some projects, particularly large residential developments, using the unit water demands in Table 2-2 may generate unrealistically high estimates of water requirements. For these large projects, the DESIGN CONSULTANT or developer may request that the CIP Project Manager consider an alternative approach, making use of the City's water demand distribution data developed for macroscale planning purposes. Similarly, the CIP Project Manager may also consider alternative unit water demand estimates for specific land use types where such estimates are based on detailed demand evaluations.

2.5 Peak Water Demands

Unless the project involves a large development that calls for an alternative approach, peak hour and maximum day water demands are estimated using the peaking factors presented in Figures 2-1 and 2-2. These peaking factors correspond to the zones identified in Figure 2-3.

FIGURE 2-1
PEAK HOUR DEMAND FACTOR

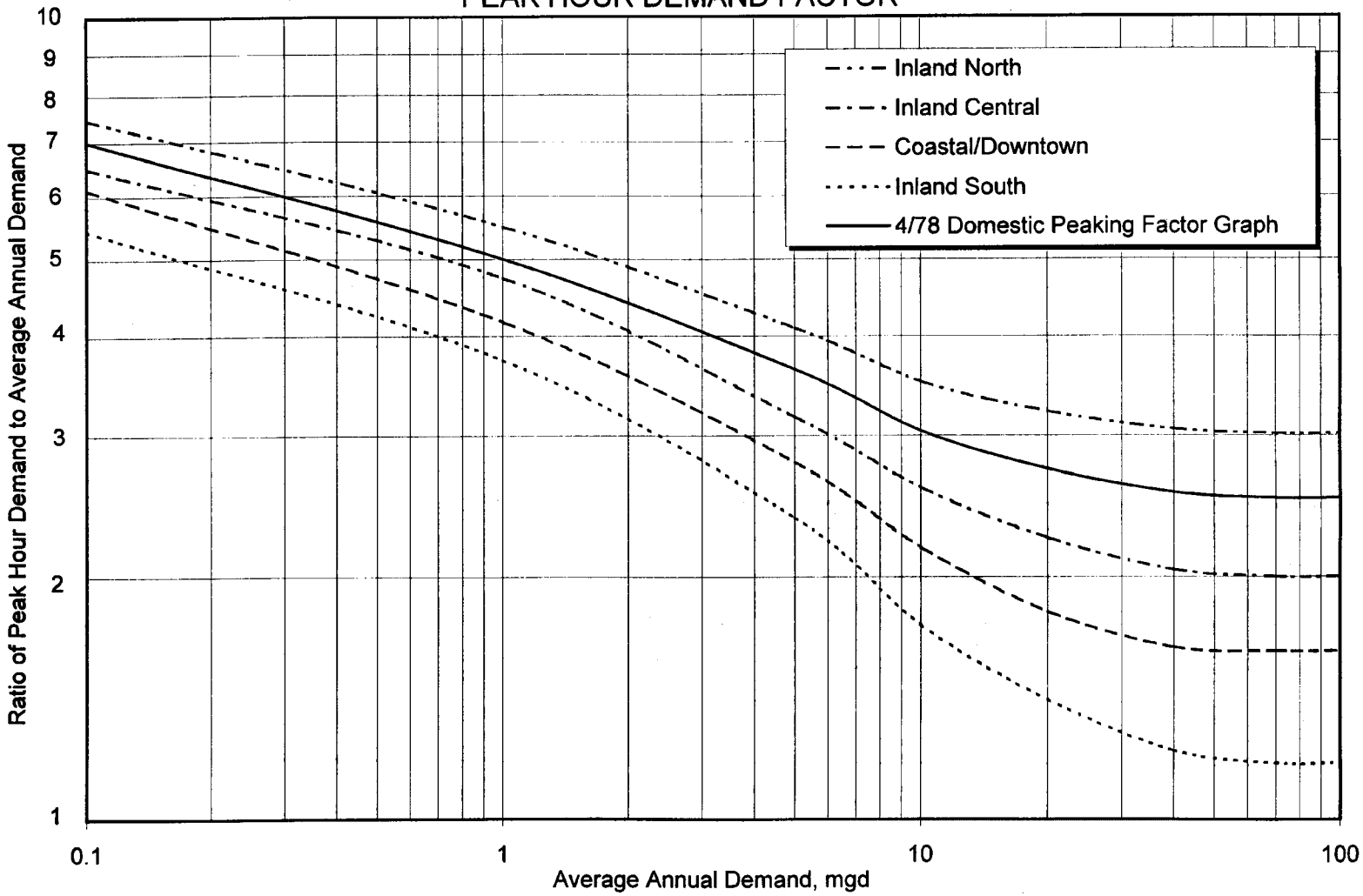

FIGURE 2-2
MAXIMUM DAY DEMAND FACTOR

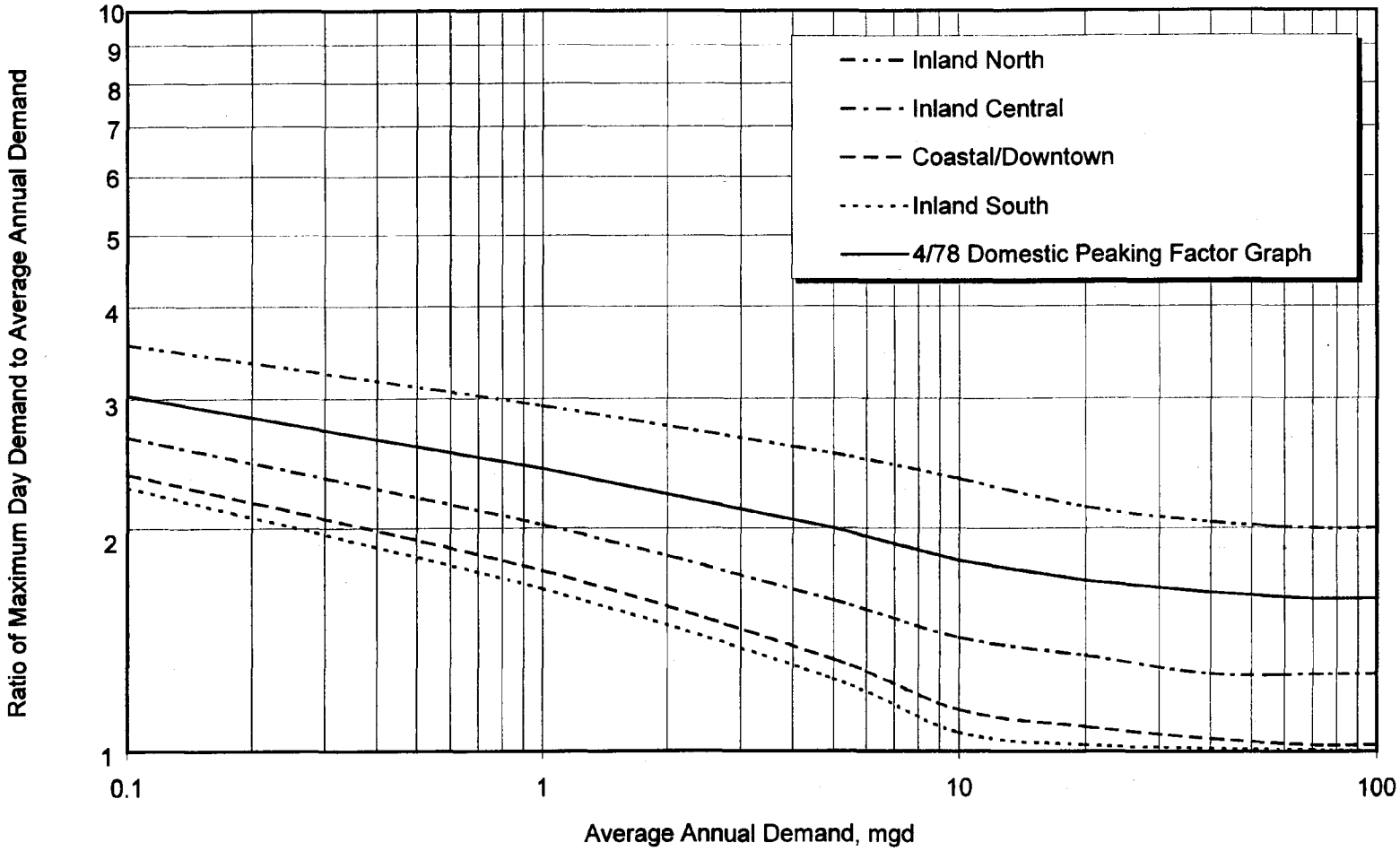

PEAKING FACTOR ZONES
(BOUNDARIES BASED ON LAND USE GROUPINGS)

FIGURE 2-3

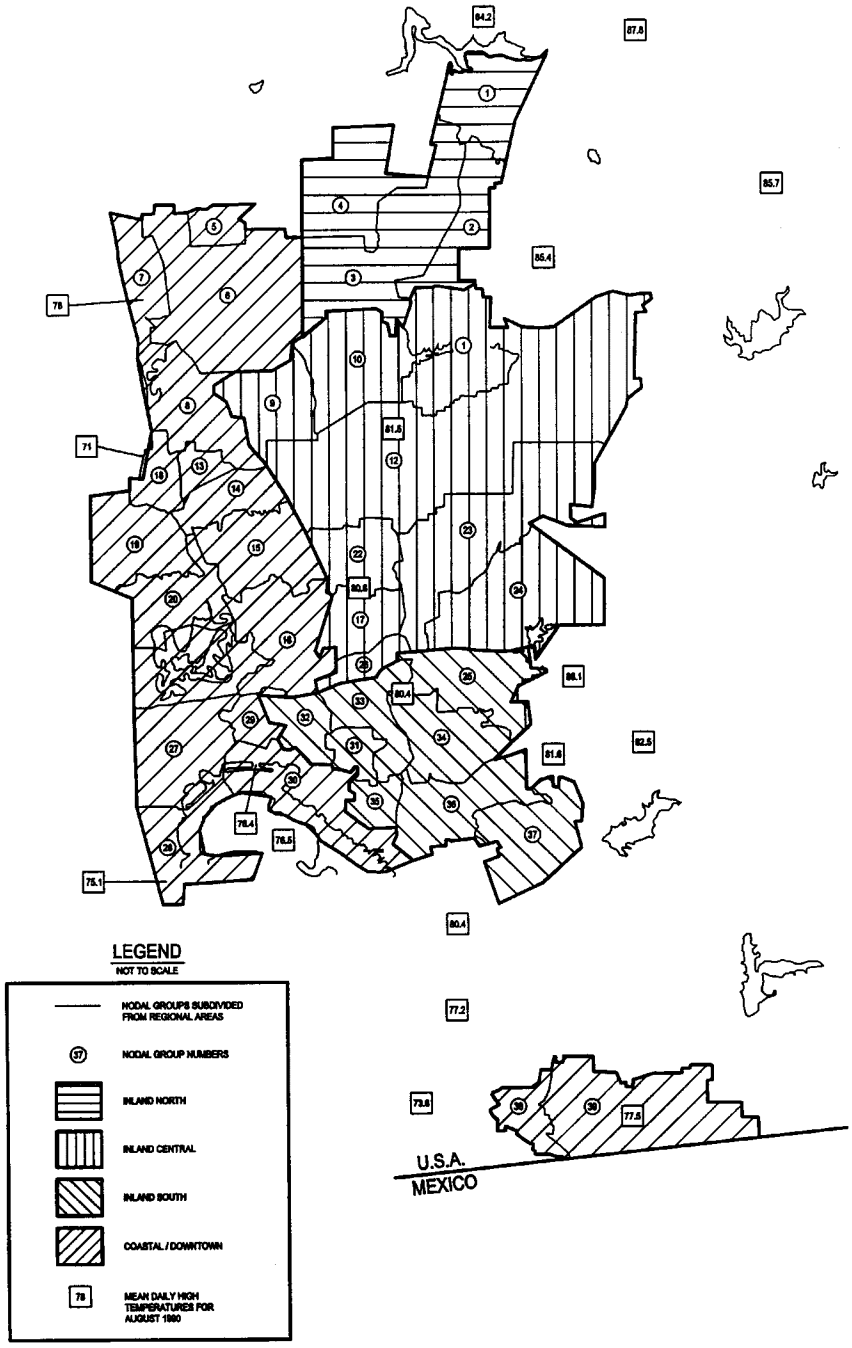

July 1999

Peak water demands are estimated as follows:

Peak Hour Demand = Average Annual Water Demand * Peak Hour Demand Ratio

Maximum Day Demand = Average Annual Water Demand * Maximum Day Demand Ratio

2.6 Fire Demands

The DESIGN CONSULTANT estimates fire demands flows by using the *Fire Suppression Rating Schedule*, Edition 6-80, Section 1 (Public Fire Suppression), published by the Insurance Services Office.

The fire flow duration for planning purposes is at least five hours. In general, minimum required fire demands for design are shown in Table 2-3.

Table 2-3
Fire Demands for Design Purposes

Development Type	Fire Demand (gpm)
Single family residential	2,000
Duplexes	2,500
Condominiums and apartments	3,000
Commercial	4,000
Industrial	6,000

Should application of the ISO methodology result in figures lower than those shown in Table 2-3, the CIP Project Manager may approve the ISO figures on a case-by-case basis following submittal of supporting calculations.

The required fire demand must be supplied from at least two fire hydrants within a maximum radius of 750 feet from the fire.

2.7 Pressure Criteria

2.7.1 Design Pressures

Water systems must be designed to provide the minimum residual pressures given:

(1) maximum day demands plus fire demand conditions, or
(2) peak hour demand conditions.

In analyzing the supply to a pressure zone, the minimum hydraulic grade line elevation available from the water source is used, a level that typically occurs during dry weather conditions. The maximum static pressure in gravity systems is determined from reservoir overflow elevations and/or the discharge control setting on pressure reducing valves, whichever is greater. The

maximum static pressure in pumped systems is determined from reservoir overflow elevations or pump shutoff levels, whichever is greater.

2.7.2 Operating Pressures

The basic pressure criteria for water system design are shown in Figure 2-4. Every water main in each pressure zone must be capable of supplying a minimum static pressure of 65 psi with no demand on the system. Operating pressures under the maximum day demand condition in the system (remote from a fire) or under peak hour demand conditions must fall no more than 25 psi below the static pressure with no demand on the system, and residual water main pressure must be at least 40 psi. Operating pressures are determined in the distribution system pipelines, excluding losses through service connections and building plumbing, and are measured relative to adjacent building pad elevations.

When analyzing a system with one source of supply (either a reservoir or a pipeline) out of service, pressures may fall more than 25 psi below static pressure with no demand on the system, but in no event may the pressure fall more than 40 psi.

2.7.3 Pressure Requirements During Fires

For the simulation of fire conditions, a minimum operating pressure of 20 psi is required in the mains (measured relative to the building pad elevation) in the vicinity of the fire, and a drop in pressure of no more than 25 psi below static is desirable for the remainder of the system. The residual pressure is determined given the fire demand concentrated at a hydrant within a radius of 750 feet of the fire, and with simultaneous water consumption occurring at the maximum day rate.

For water systems with available storage, the residual pressures in the distribution system during a fire are maintained given the following conditions:

- The water level in the storage facility at the time of the fire is at or near the minimum level that typically occurs with normal diurnal demands, and
- The prescribed 5-hour fire duration is coincident with the 5-hour period of highest water demands.

2.8 System Reliability

Water systems must be designed to meet the pressure criteria with one critical source out of service. Water mains must be designed so that no more than one, average-sized city block (approximately 30 homes) is out of service at any time, and no more than two fire hydrants (excluding fire services) are on a dead end or are out of service at any time. These provisions do not apply under earthquake conditions.

Water mains serving more than two hydrants or more than 30 homes must be looped, fed from two sources, or provided with a reservoir of sufficient capacity to supply the emergency needs (contingency and fire storage) as described below in subsection 2.9.

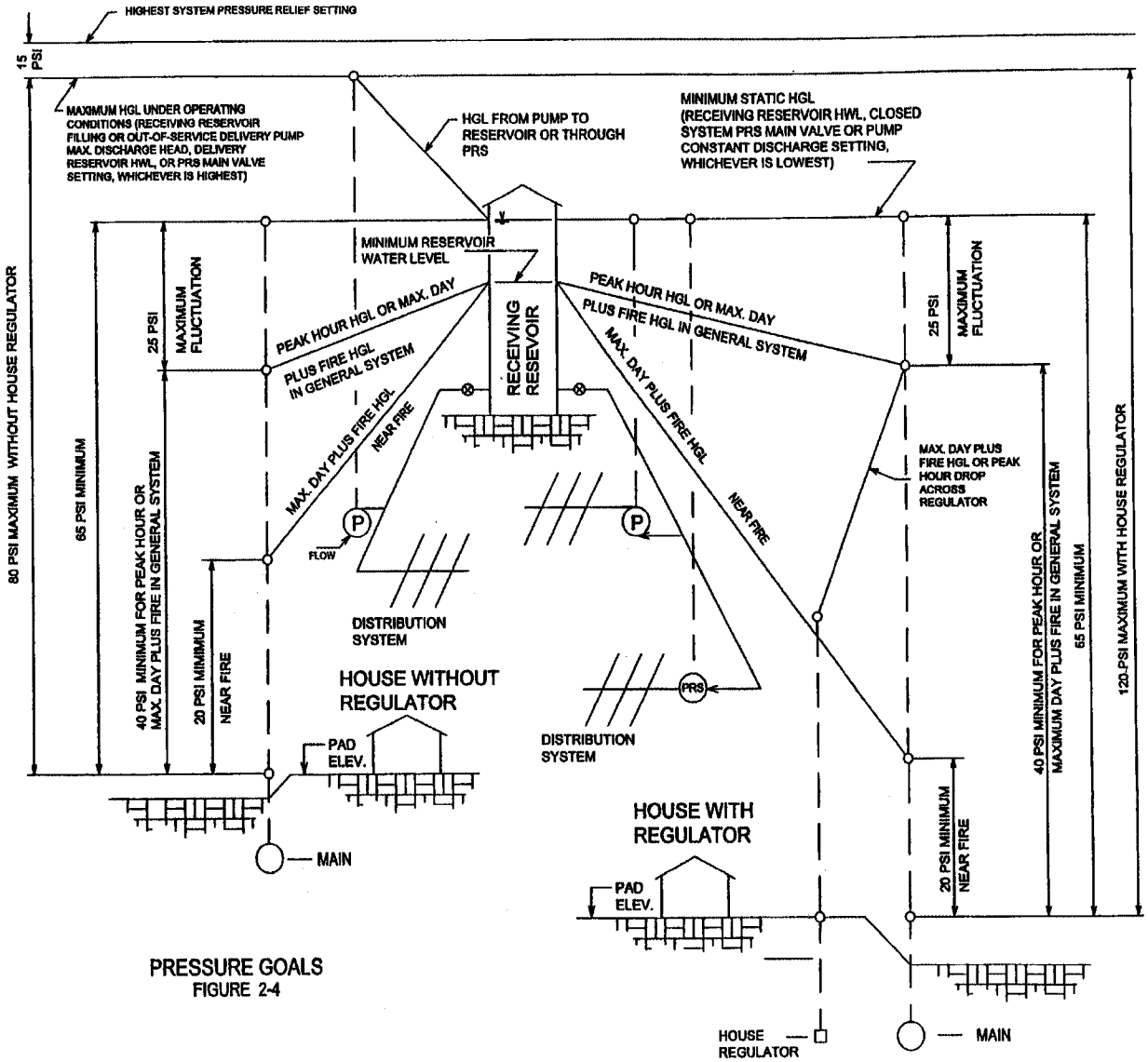

PRESSURE GOALS
FIGURE 2-4

2.9 Storage Criteria for Water Systems

There are three basic types of water storage in the City's system: regulating reservoirs, forebays and clearwells. Regulating reservoirs balance supply and demand for a pressure zone and/or service area. Pressure zones are normally designated by the overflow elevation of the regulating reservoirs. Forebays are used to balance supply and pumping demand to provide a stable suction head for a booster pump station. Typically, a clearwell is a regulating reservoir to store filtered water in a water treatment plant. The shape and material of the storage vessel (elevated tank, standpipe, circular, rectangular or trapezoidal ground level steel, prestressed or reinforced concrete reservoirs) is generally determined by the amount of water storage required, topography of the available site and the economy of construction.

Definitions

- Ultimate Maximum Day Demand or Maximum Day Demand (UMDD): It is the forecasted maximum day demand (ultimate average day demand multiplied by a peaking factor) for a projected future planning date. This date is selected during the planning phase of the project. The Maximum Day Demand Flow Rate is the uniform flow rate delivering water in a 24-hour period to meet Maximum Day Demand.

- Peak Hour Demand is the forecasted UMDD multiplied by a peaking factor for determining the projected highest hourly consumption during one year.

- Service area includes all pressure zones supplied by a water facility including:

  a) Zone(s) served directly without the need for pumping or pressure reduction,
  b) Pumped zone(s) supplied through pumping station(s), and
  c) Pressure reduced zone(s) downstream of a pressure reducing station(s).

- WTP – Water Treatment Plant

2.9.1 Regulating Reservoirs

The required storage volume within a pressure zone or service area is the sum of three elements: operating storage, fire storage and emergency storage, as indicated in the sketch below.

A. Operating Storage

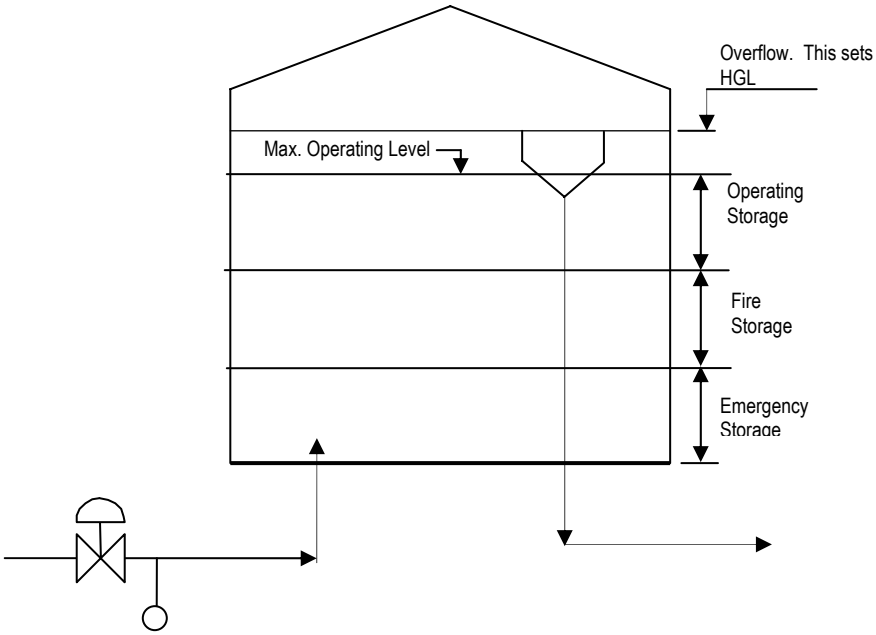

1) Definition. Operating storage is defined as the volume of storage necessary to allow a reservoir's sources of supply to operate at a uniform rate throughout the day while meeting variable water demand. In some cases, operating storage is used to permit reducing or stopping of supply during peak hour water demand conditions or stopping of pumping operations during hours of peak energy demand. Operating storage may also be defined as the amount of storage necessary to supply Peak Hour Demand with a water supply having a uniform Maximum Day Demand Flow Rate. Operating storage must fluctuate daily in all water storage facilities, like standpipes and elevated tanks supplied by pumps and in ground level reservoirs supplied by gravity pipelines.

In order to optimize the use of transmission facilities and to improve water pressure during peak water demand conditions, pump or gravity inflow must be controlled to achieve top operating levels at 5:00 AM each morning.

2) Calculation Procedure. Operating storage is calculated as 30 % of the ultimate maximum day demand in the service area (one or more pressure zones). The source(s) of supply must provide for maximum day demand.

To allow the reduction or stopping of supply during peak hour water demand conditions or stopping of pumping operations during hours of peak power demand, requires additional operating storage volume. Assuming that the amount of operating storage was already determined to balance a uniform daily supply with continuously variable demand, the additional operating storage for reducing or stopping of supply due to peak hour water demand or peak power demand management equals the rate of supply reduction times the duration of supply reduction.

If more than one reservoir is planned for the service area, operational storage can be divided between reservoirs, but only when water system modeling shows that minimum pressure requirements are met during peak hour demand.

For existing and substantially developed service areas, the amount of operational storage may be determined by flow measurement. This flow measurement, based on supply and demand curves, must be adjusted for future growth and reasonably anticipated climatic extremes.

The amount of operating storage may be reduced by water supply capacity available in excess of maximum day demand flow rate.

3) Example. Assume the expected ultimate maximum day demand in a pressure zone is 6,000 gal/min, then the required operating storage is:

Operating storage = ((6,000 gal/min x 1440)/1,000,000) x 0.3 = 2.6 mg

Continuing with the example above, let us assume now that the pumps are shut off for two hours for peak power demand management, the supply is thus reduced by 6,000 gal/min for 2 hours. The additional operating storage required is then:

Power management storage = ((6,000 gal/min x 60) x 2)/1,000,000 = .72 mg
Use 0.8 mg for power management storage.

Total operating storage: 2.6 mg + 0.8 mg = 3.4 mg

B. Fire Storage

1) Definition. Fire storage is the minimum amount of water required to be stored for firefighting purposes. Minimum fire flow flows and their duration are established by the City Fire Marshall based on Insurance Services Offices (ISO) guidelines.

2) Calculation Procedure. Fire storage is calculated by multiplying the maximum fire demand expected in the service area by its duration, as stated in Section 2.6. If more than one tank is planned for a service area, fire storage can be divided between tanks, but only when water system modeling shows that minimum fire flow and pressure requirements are met.

The amount of fire storage may be reduced by water supply capacity available in excess of maximum day demand flow rate with operating storage, or in excess of peak demand flow rate without operating storage.

3) Example. Continuing with the example above, let us assume now that the pressure zone is classified as commercial with minimum fire flow of 4,000 gal/min for 5 hours. (For service areas with UMDD of 100 MGD and more, consider that 2 fires are burning concurrently.) The minimum fire storage is:

Fire storage = ((4,000 gal/min x 60) x 5)/1,000,000 = 1.20 mg

C. Emergency Storage

1) Definition. Emergency storage is the amount of water that needs to be stored to satisfy demand when any single component of the system (power, pump, supply pipe, etc.) is out of service.

2) Calculation Procedure. Maximum emergency storage is calculated as 12 hours times the ultimate maximum day demand, in gallons per minute. If anticipated total service outage exceeds 12 hours, then a cost/benefit analysis is required to determine the most cost effective solution to meet reliability and water quality objectives.

The amount of emergency storage may be reduced by water supply capacity available after a single system component is out of service, or by the reduced time it takes to return to full service based on reasonable estimate of time for restoration of system capacity, as determined by Water Operations Division.

If more than one reservoir is planned, emergency storage can be divided between the reservoirs, but only when water system modeling shows that minimum flow and pressure requirements are met during peak hour and fire demand conditions.

3) Example. The minimum amount of emergency storage based on the examples above is:

Emergency storage = ((6,000 gal/min x 60) x 12)/1,000,000 = 4.4 mg

If, for instance, there are two pump stations with a 3,000 gal/min capacity each supplying the same pressure zone and one pump station is out of service, the emergency storage is reduced to:

((3,000 x60) x 12)/1,000,000 = 2.2 mg

D. Total Storage. For the examples listed above, the total storage would be the sum of operating, fire and emergency storages, or 3.4+1.20+4.4 = **9.0 million gallons**.

> **Note:** Water storage volume located in pumped zones of a service area may not be used to reduce the calculated "Total Storage" for the gravity fed portions of a service area.

2.9.2Forebays

Forebays are usually small tanks located on the suction side of a booster pump station. They balance available supply with pumping demand and provide a stable suction head to the pump station. If a pump station is adjacent to a regulating reservoir; the reservoir acts as a forebay also. Due to the nature of its function, forebays have only one element – operating storage.

The required volume can be calculated as shown in section 2.9.1A.2 above.

2.9.3Clearwells

A clearwell is a regulating reservoir to store filtered water near a water treatment plant.

A. Operating Storage

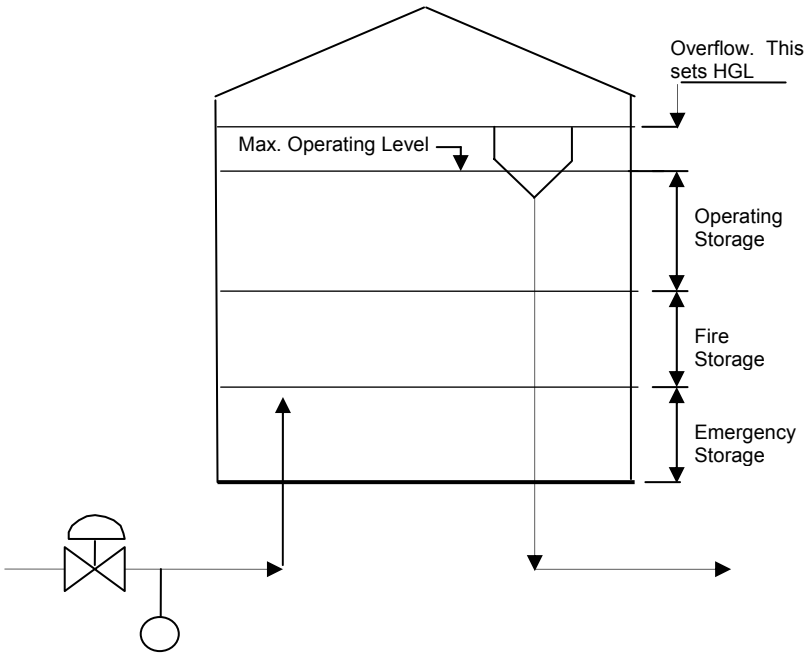

1) Definition. Operating storage is defined as the volume of storage necessary to allow a WTP to operate at a uniform rate throughout the day while meeting variable water demand. Operating storage must fluctuate daily in all water storage facilities. In general, the operating storage volume is divided between the potable water reservoirs within the treatment plant service area. The clearwell's share of the operating storage (30% UMDD) will depend on the location and capacity of the other reservoirs within the WTP service area.

2) Calculation Procedure. The required volume can be calculated as shown in section 2.9.1.A.2 above.

B. Fire Storage

1) Definition. Fire storage is the minimum amount of water required to be stored for firefighting purposes. Minimum fire flow flows and their duration are established by the City Fire Marshall based on Insurance Services Office (ISO) guidelines. Fire storage requirements for clearwells are the same as for any reservoir within the distribution system.

2) Calculation Procedure. The required volume can be calculated as shown in section 2.9.1.A.2 above.

C. Emergency Storage/Shutdown Storage

1) Definition. Emergency storage is the amount of water that needs to be stored to satisfy demand when any single component of the WTP (sedimentation basin, power, pump, supply pipe, etc.) is out of service.

It is generally advisable that the raw water supply and treatment facilities are designed with the same reliability and redundancy as the water distribution system for delivery of uninterrupted water supply. That is, with any single component out of service, one at a time. This will allow routine facility maintenance to proceed anytime or at the minimum during the winter months without impacting the capacity of the system to meet treated water demand.

Shutdowns are not unique to water treatment plants, they are just more routine and have more significant impact due to the complexity and size of facilities. Shutdowns and emergencies

have similar impacts with the difference that shutdowns are prescheduled and can be anticipated. Therefore, a thorough analysis of the raw water supply and treatment facilities is required to determine the critical facility components resulting in the longest or most significant reduction of treatment capacity when they are out of service, due to either routine maintenance or emergency failure.

2) Calculation Procedure. After determination of the critical maintenance shutdown and emergency repair vulnerability of the water treatment plant, the required volume can be calculated as shown in Section 2.9.1.C.2. above.

It is to be noted that operating and emergency storage can be used during WTP shutdowns. As such, additional shutdown storage capacity is only required if shutdown demand is greater than the sum of operating and emergency storage.

D. Total Storage. For examples listed in section 2.9.1 above, the total clearwell storage would be the sum of operating, fire and emergency storages, or 2.6+1.20+4.4 = **8.2 million gallons** for a WTP with 8.7 MGD capacity and without any service area distribution system storage. (Assumption WTP capacity = UMDD).

> **Note:** Water storage volume located in pumped zones of a service area may not be used to reduce the calculated "Total Storage" for the gravity fed portions of a service area.

E. Minimum and Maximum Storage

As a minimum, the clearwell storage should not be less than 25% of the WTP capacity, and not more than the UMDD of its service area for plants 10 MGD and larger.

It is generally more economical to build a reliable WTP to meet UMDD than to provide additional water storage for emergencies and to meet UMDD. Therefore, vulnerability risk analysis and cost/benefit analysis are recommended before deviating from the guidelines outlined above.

Book 2

Facility Design Guidelines

Chapter 3
Transmission and Distribution Pipelines

City of San Diego Water Department
Capital Improvements Program

Chapter 3
TRANSMISSION AND DISTRIBUTION PIPELINES

3.1 General

The Capital Improvements Program requires the design and construction of new transmission and distribution pipelines. Since the number of projects and design effort spans several years, this chapter provides uniform standards on the following for both transmission and distribution pipelines:

- Pipe materials
- Fittings
- Valves and associated structures
- Fire hydrants and services
- Water services
- Water meters
- Flow meters
- Backflow preventers
- Pipe design criteria
- Hydraulic and surge analysis
- Thrust restraint
- Special crossings
- Trenchless construction
- Pipe trench width, bedding and backfill
- Communications

In addition, Chapter 7 of this Book 2 describes the corrosion control design criteria for pipelines and appurtenances.

3.2 Project Presentation

This section on project presentation describes the standards, relevant guidelines and information required to maintain consistency and quality in the drawings and specifications for future Public Utilities Department CIP projects.

3.2.1 Preliminary Alignment

Preliminary alignments are generally developed by the Public Utilities Department during the project conceptual or predesign phase and are presented in the Planning Study or Predesign Report. The format used for the preliminary drawings may not necessarily represent that required for the design drawings.

In most cases, topographic mapping are provided by the City of San Diego, Survey Department. The DESIGN CONSULTANT updates the topographic base to include any development or physical changes that have occurred after the date of survey. If a preliminary horizontal alignment is provided, the DESIGN CONSULTANT reviews and

recommends changes in the design to accommodate utility conflicts, the design's constructability, permitting requirements, or easement/right-of-way needs. As agreed with the CIP Project Manager, the proposed horizontal alignment changes must be submitted in writing prior to any work being performed, or presented in the Basis of Design Report (BODR) but before the 30% submittal.

The vertical alignment is established by the DESIGN CONSULTANT in the design to accommodate utility and permitting requirements, pipe installation criteria, geotechnical requirements, and local, state, and federal standards.

3.2.2 Contract Specifications

The standard specifications used for CIP Projects are the latest adopted revision of the GREENBOOK Standard Specifications for Public Works Construction, Regional Supplement Amendments, and City of San Diego Supplement Amendments.

Beyond these, the DESIGN CONSULTANT adapts Book 4, Standard and Guide Specifications, and uses those sections which are project-specific. The DESIGN CONSULTANT also prepares special provisions as necessary to meet the additional requirements of the project, and adds new sections in CSI format which are not in the standard specifications, as needed.

3.2.3 Contract Drawings

The DESIGN CONSULTANT develops contract drawings to meet the specific needs of a project. Preliminary drawings, when provided to the DESIGN CONSULTANT, are used initially as the basis of design and are amended as necessary. The contract drawings must conform to the requirements of the Book 5, CADD Standards.

3.3 Sizing, Alignment and Easements

3.3.1 Sizing and Alignment Criteria

Generally, water mains are located 10 feet southerly or easterly of the centerline of streets. For alleys, narrow streets, and private driveways (less than 36 feet curb to curb), water mains may be located less than 10 feet, but not less than 6 feet, from the centerline. When there is a raised center median with curb, water mains are located a minimum of 5 feet from the face of the median curb but within the center 6 feet of a traffic lane (see SDRSD, SDM-111, M-22 and 23).

A. Horizontal and Vertical Curves

Curves for smaller diameter jointed pipe are accomplished using straight lengths of pipe with selected bends and fittings. Curves for larger diameter welded steel pipe are accomplished using beveled joints. Curves are based on industry standards of minimum radius of curvature.

B. Utility Separations

A minimum of 5-foot horizontal separation is recommended between water mains and other utilities except for sewer mains. Water main and sewer main separation

must adhere to state of California Department of Public Health criteria. Review and written approval shall be required from the California Department of Public Health, Drinking Water Field Operations Branch, for separation deviations between water, sewer or reclaimed water.

C. Water Main Abandonment

The abandonment of existing water mains and appurtenant structures should be in accordance with the construction drawings and the most current approved edition of the Standard Specifications for Public Works Construction (SSPWC or GREENBOOK) and Supplements as adopted by the City.

D. Transmission Mains

Transmission water mains (16-inch in diameter and larger) are sized to provide all current water needs of the area they supply, with sufficient reserve capacity to allow future expansion and development. When possible, transmission mains should be planned so that each area is supplied by a minimum of two transmission lines, each capable of providing the water needs of the area being served, under the 25% emergency water conservation mandate.

Acceptable sizes for transmission mains are 16-inch, 20-inch, 24-inch, 30-inch, 36-inch (increasing in 6-inch increments).

Transmission water mains may not be tapped directly for water services (domestic or irrigation) or fire services (including hydrants), except for 16-inch or by special exemption by Water Operations Branch. To receive water from a transmission main, a connection to a distribution main must be tapped or built into the transmission main.

E. Distribution Pipelines

Distribution water mains (16 inch in diameter and smaller) should be sized to meet the pressure criteria and the required fire flow plus maximum day demand at a maximum velocity of 15 fps. In lieu of specific calculations for minor losses, calculated head losses are increased by 10% for fittings and other minor losses.

Acceptable sizes for distribution mains are 8-inch, 12-inch, and 16-inch; 14-inch pipe is not used.

Water mains in commercial and industrial areas are a minimum of 12 inches in diameter.

3.3.2 Pipeline Profile Criteria

The DESIGN CONSULTANT develops the pipeline profile to minimize costs while still meeting the needs of the project. Factors to be considered include:

- Pipe material, fabrication, and installation costs
- Potential conflicts with existing and future utilities or other improvements
- The safety and security of the pipeline
- Geotechnical conditions
- The requirements of governing agencies

- Maintenance requirements

The profile of water mains should include stations and elevations at grade breaks. Abrupt vertical grade breaks resulting in upward thrust should be avoided. Profile requirements for special crossings are discussed in subsection 3.13.

For a pipe diameter of less than 12 inches, only the pipe invert need be shown in the profile. For pipes 12 inches in diameter and larger, the pipe invert and the top of the pipe should be shown, and the pipeline stationing should be the centerline of the pipe.

Minimum cover for pipelines is described in paragraph 3.8.3, or as shown in the City of San Diego standard drawings.

3.3.3 Easements

Permanent easements and where the pipe is located outside the right-of-way, are located entirely within one lot or parcel and adjacent to the property line.

Sixteen-inch diameter and smaller water mains require a minimum 15-foot wide easement. The main should be positioned 5 feet from the property line. A minimum 20-foot wide easement is required for 20-inch to 36-inch diameter mains and a minimum 25-foot wide easement is required for 36-inch diameter and larger mains. Wider easements may be required when the pipe is placed at depths greater than normal (3 to 5 feet to the top of the pipe for water mains). All existing substandard easements must be brought up to current standards prior to the approval of any new improvement permit by the Public Utilities Department.

A minimum of 5 feet of additional easement width (beyond that described above) is required for water mains located in canyons, “open space” areas, and other hard-to-get-to areas such as between buildings.

Water service taps are not allowed on easement water mains except where the easement is a paved traveled way and is at least 24 feet wide.

Easements encompassing more than one utility require a minimum of 5 feet of additional width for each utility.

A. Private Street Easements

Easements located in private streets, private driveways, industrial complexes, apartment complexes, and condominiums that are required for access of water vehicles, water meter readers and fire protection equipment, must be a minimum of 24 feet wide and paved the full width of the easement. Easements for fire service mains may be unpaved with a minimum 15-foot width, provided there are no metered water services connected to the fire service main. A separate 24-foot minimum width paved access easement to any connected hydrant must be provided.

B. Access Easements

Vehicular access easements for water meter readers and fire protection equipment must be a minimum of 24 feet wide.

Access roads must be provided to all water main appurtenances (blowoffs, air valves, gate and butterfly valves, manholes, etc.). Access roads must be a minimum of 20 feet wide with a maximum 8% slope, and have a minimum 4-inch decomposed granite surfacing. Access roads with slopes of 8% to 15% may be approved by the CIP Project Manager in special circumstances and, if approved, must have a minimum 3-inch, asphaltic-concrete surfacing.

Easements secured by fencing must have a locked vehicular access gate. Keys to the lock must be provided to the various utility agencies with facilities inside the fenced area.

C. Fire Hydrant Easements

Fire hydrants are provided with a minimum 24-foot paved access easement. Access to onsite and easement fire hydrants is approved by the Fire Department.

3.4 Pipeline Materials, Linings, and Coatings

This section references pipe materials, linings, and protective coatings for water pipelines. For specific corrosion control design criteria, refer to Chapter 7. For general seismic criteria, see Chapter 8.

3.4.1 Materials

The material for water mains is selected in accordance with the current issue of the City of San Diego Water Department Approved Materials List. PVC pipe is generally unacceptable when buried with less than 22 feet or more than 8 feet of cover. Steel pipe (STL) and steel cylinder rod-wrapped pipe (SCRW) is acceptable for water mains 24 inches in diameter or larger. PVC C-905 pipe is also acceptable for use from a 16-inch diameter up to a 36-inch diameter with approval from a Water CIP Project Manager. For general design guidelines for material selection to account for seismic conditions, see Chapter 8.4.2.

A. Asbestos Cement (AC) Pipe

AC pipe is no longer an acceptable material for water pipes.

B. Ductile Iron (DI) Pipe

Thickness design must conform to AWWA C-150 and C-151. Rubber-gasket joints must conform to AWWA C-111. The installation of DI pipe and its appurtenances must conform to AWWA C-600.

C. Polyvinyl Chloride (PVC) Pipe

PVC pipe 4 inches through 12 inches in diameter must conform to AWWA C-900. The dimension ratio (DR=O.D./t) for PVC pressure pipe must not exceed 18.

Solvent cement or mechanical joints are not acceptable for pipe-to-pipe connections. Use bell and spigot pipe or gasketed couplings. Pipe-to-fitting connections are mechanical joint only.

PVC pipe 16 inches through 36 inches in diameter used for transmission purposes must conform to AWWA C-905. However, pipes used for distribution purposes must have a safety factor of 2.5 per AWWA C-900.

Concrete encasement with PVC pipe must be avoided whenever possible. Higher strength pipe supported by design calculations is used in lieu of encasement. However, in cases where concrete encasement is required (i.e., water main(s) crossing or being crossed by other piping), the concrete encasement extends in both directions for a sufficient length to reduce the possibility of creating shear points at the end of the encasement due to traffic loading, etc.

D. Steel (STL) Pipe

STL pipe must conform to AWWA C-200. Field welding must conform to AWWA C-206.

E. Steel Cylinder (SC) Pipe

Steel Cylinder (SC) pipe is no longer used for new installations (AWWA C-300). Portions of the existing system are composed of this type of pipe. When connections are made to existing SC pipe, special consideration must be made to construction details and system downtime.

F. Steel Cylinder Rod Wrapped (SCRW) Pipe

The design of SCRW pipe must conform to AWWA 303. This pipe material is for buried services and is not acceptable for aboveground installations. Connections of SCRW pipe 24 inches in diameter and larger are “buttered with mortar” by hand from inside the pipe. Hand-holes with split butt straps are not allowed.

3.4.2 Linings and Coatings

In selecting materials for use in a water and soil environment, two main factors must be considered. The materials must be capable of performing the desired function in a safe and economical manner, and the materials must operate satisfactorily over the design life of the facility. As corrosion-caused deterioration of materials is a likely mode of failure, select materials capable of withstanding the aggressive environment to which they are exposed. The following discussion focuses on the implications of corrosion on materials selection for water pipelines to be constructed under the Water CIP.

The term ‘coatings’ refers to materials applied to the exterior of the pipe including tape coatings for corrosion protection; ‘linings’ describes materials applied to the pipe interior for corrosion protection. Linings and coatings requirements are described in Book 2, Chapter 7, Corrosion Control Design Criteria.

All coatings must meet local, state and federal air quality regulations. This is important as there have recently been significant changes in these regulations. The DESIGN CONSULTANT must be aware of the effect of these regulations on coating selection, and must also be aware of manufacturer=s recommendations regarding surface preparation prior to coating or lining application. Refer to CIP Book 4, Specifications.

For ductile iron pipe, shop-applied cement mortar lining as specified in AWWA C-104 must be double thickness per sections 4.7 and 4.8 of AWWA C-104. All DI pipe installed underground must be coated with liquid epoxy coating system per AWWA C-210 or any approved polyurethane coating system. Bonding of joints is required.

Cement mortar protective lining and coating for steel pipe must conform to AWWA C-205. Coating is a minimum of 1-1/4-inch thick for buried pipe and lining is a minimum of 3/4-inch thick. If a cathodic protection system is recommended (for buried pipe), cold-applied tape wrap is applied to the pipe exterior with a 3/4-inch cement mortar coating on top of the tape wrap. Exposed steel pipe requires a painted protective coating.

SCRW pipe must have 1-1/4-inch cement mortar coating over the rod and a 3/4-inch cement mortar lining.

Linings and coatings are more specifically described in Chapter 7 of this Book 2.

3.4.3 Cathodic Protection

Cathodic protection is discussed in Book 1, Chapter 9, Corrosion Control.

3.5 Valves, Appurtenances and Structures

Pipeline appurtenances/structures include mainline valves, outlets, air release/vacuum relief structures, blowoff stations, access structures, communications, and pipeline markers. Each item is discussed in the following sections. Table 3-1 at the end of this section provides a summary of the design criteria. The DESIGN CONSULTANT should refer to the City of San Diego's latest current Approved Materials List when selecting materials.

3.5.1 Valves

Mainline valves are used only if required for safety, maintenance or operation. The location, size and type are as recommended by the DESIGN CONSULTANT and approved by the Public Utilities Department. Unless otherwise approved, mainline valves are the same diameter as the pipeline.

On distribution mains, valves are placed at street intersections and on each smaller main as it leaves the larger main. In general, crosses are valved in 3 directions; tees in 2 directions. In all business districts, all tees and crosses are valved on all sides. Valves for fire hydrants are perpendicular to the water main and in line with the fire hydrant; no offsets are allowed. Note that butterfly valves are not allowed on fire services.

Distribution water mains are valved so that the maximum distance between valves is about one average city block (approximately 30 homes) for 8-inch diameter mains; about 1,200 feet for 12-inch diameter mains; about 1,600 feet for 16-inch diameter mains. The maximum spacing of valves along transmission mains is one-half mile. However, all of the above notwithstanding, valves in the distribution system are placed so that no more than 2 fire hydrants or one average city block is out-of-service at any one time in the event of a main break (in accordance with Fire Department policy). All fire services including hydrants are valved at the main (see SDRSD W-10).

Where future water main extensions are anticipated, or are deemed possible, valves are placed, where possible, so that no customers are out of service for the connection work. In most cases, this calls for a flanged valve 20 feet from the end of the main. The drawings must specify, either by general note or direct callouts, that valves are flanged to crosses and tees. Valves used with PVC pipe must have mechanical joint ends. Large valves (greater than 26 inches in diameter) are always flanged.

Valves must be of the size, type and class indicated on the drawings and/or specifications. Unless otherwise specified, all valves must be minimum Class 150. Only gate, resilient-seated gate, and butterfly valves are allowed.

All valves for buried service must be factory-coated with a polyamide cured epoxy coating. Buried valves also get a cold-applied petrolatum/wax tape coating or cement mortar coating per Chapter 7, Book 2. A polyamide cured epoxy coating is applied inside the valves per manufacturer instructions.

A. Gate and Resilient-Seated Gate Valves

Gate valves must conform to AWWA C-500 and SSPWC Regional Supplement 207-26.3. Resilient-seated gate valves must conform to AWWA C-509. Valve key extensions (SDRSD SDW-109) for buried valves are used whenever the top of the valve is 25 inches or more below the ground or pavement surface.

Sixteen-inch gate valves must have a 3-inch bypass when the maximum operating pressure is 80 psi or greater; larger gate valves must have bypasses per AWWA C-500.

AWWA C-509 does not require 12-inch resilient-seated gate valves to have a bypass when the operating pressure is less than 165 psi.

B. Butterfly Valves

Butterfly valves and operators must conform to AWWA C-504. Class 150B butterfly valves may be specified for 6-inch through 48-inch sizes (see SSPWC Regional Supplement 207-26.4). Class 250 butterfly valves may be specified for 6-inch through 54-inch sizes (see SSPWC Regional Supplement section 207-26.4.1). The use of Class 250 butterfly valves over 12 inches must be approved by the CIP Project Manager.

16-inch and larger butterfly valves shall have a by-pass installed by the contractor. The bypass shall be 4-inch for valves up to 36-inch, and 6-inch for valves greater than 36-inch. The bypass shall include a gate valve, and it shall be the same size as the bypass.

The 16-inch by-passes (3-inch gate valves) shall be installed only on transmission mains and subject to review and approval by Water Operations Branch.

Valve key extensions (SDRSD SDW-109) must be installed for all buried butterfly valves. Butterfly valves are not allowed on fire services.

C. Plug Valves

Class 250 plug valves are required unless otherwise approved by the CIP Project Manager, for all sizes 16 inches and larger. This grouping includes cone valves, ball

valves, and eccentric plug valves. Plug valves are specified with supplemental specifications. Ball valves must conform to AWWA C-507. All plug valves should be installed in a vault due to maintenance issues.

D. Combination Air and Vacuum Valves

Air valve assemblies are used to provide adequate ventilation during filling and draining of a pipeline, to permit the release of small quantities of air that would otherwise accumulate at high points in the pipeline, and to protect the pipeline from vacuum pressures caused by surge conditions or a pipe break. The locations of air valve structures are generally determined by the topography of the pipeline system and, accordingly, should be installed at high points and at long downsloping gradients. Air valves are also installed on the low side of the line. These valves allow for air intake and release from that portion of the line. Combination air and vacuum valves should also be placed down slope of a permanently closed valve separating two different pressure zones.

Air valve assemblies should consist of the following valve types: combination type (AV/AR); air release valve (AR), air vacuum valve (AV); or a multiple valve (AV and AR). All these valves (or combinations of valves) are installed aboveground and housed in an approved structure out of traveled ways within a right-of-way or an easement. A typical AV/AR type assembly consists of parallel combination air vacuum/air release valves, isolation valves, slow closing check valves, and a parallel stem piping from a single outlet at the crown of the pipe. Typical air/vacuum assemblies are not redundant.

Where air release, air vacuum, or combination valves are needed at a location not in conjunction with a manhole, multiple outlets for the valves could be considered. Outlets should be spaced far enough apart not to require special reinforcement of the pipe or conflict with other valves and appurtenances. This latter design would be incorporated into the line only when expanded air quantities are very large.

Critical valves are those which, if removed or not functional, could create adverse air buildup or negative pressures under certain operational, filling, draining or catastrophic failure conditions, any of which could damage the pipeline or connected facilities.

Combination air and vacuum valves should be placed at high points on water mains 12 inches in diameter and larger. For water mains on very steep slopes and for pipe sizes 12 inches and larger in diameter, calculations to determine the size of combination air and vacuum valves are required.

The system standard is 1-inch to 16-inch diameter pipe, 2-inch to 48-inch diameter pipe, and 4-inch to greater than 48-inch diameter pipe.

Air valves for water mains 12 inches in diameter and smaller may be excluded if a manual air release (W-3), water service or fire hydrant is located near the high point. In general, a 1-inch combination air and vacuum valve, automatic type (SDRSD SDW-100, SDW-117, and W-4), is adequate for water main sizes up to 12 inches in diameter.

E. Sizing of Air Valves

Air valves are sized as needed to release air during filling of the pipeline, to release small quantities of air during operation, to admit air as the pipeline is being drained, and to admit air if a pipeline break or surge condition occurs.

Air and vacuum valves are sized for the air evacuation rate associated with maximum water discharge rates at affecting blowoffs in accordance with the air valve manufacturer's recommendations. However, in no case may the design differential pressure for air entering the pipeline be greater than 5 psi or the differential pressure which could collapse the pipeline using the factor of safety recommended in AWWA M11.

The drawings or specifications must state the design pressure range for each air and vacuum valve.

F. Motorized Seismic Valves

Motorized seismic valves are used to provide closure of valves in response to an earthquake event that ruptures a pipeline. This mechanism isolates undamaged facilities from damaged facilities to limit further disruption from draining water, contamination, etc. Typical applications include reservoir inlet/outlets and pipelines that cross active faults. A detailed description of the seismic isolation valve system for reservoirs is provided in Chapter 5, paragraph 5.4.4-D.

Isolation valves (butterfly, gate, ball or plug valves) are installed with motorized actuators suitable for connection with seismic detectors. Seismic detectors with interlocks to flow and pressure devices are installed at or near the isolation valve. A combination of events causes a signal to be sent to the valve, which closes automatically. A seismic event that triggers the seismic detector combined with a high flow indication sends a signal to close the valve. A seismic event that triggers the seismic detector combined with an indication of a low pressure sends a signal to close the valve.

A second type of seismic valve consists of a swing check valve with an acceleration-sensitive triggering device. During an earthquake, an acceleration-sensitive ball moves and strikes a reacting cylinder that closes the valve. This is a mechanical mechanism and is similar to that used in the California Gas Shutoff Valve.

The location, size, and type of the seismically actuated valve system is as recommended by the DESIGN CONSULTANT and approved by the Public Utilities Department. Chapter 8, paragraphs 8.4.2 and 8.4.3 provide guidance of when automatic (electric or hydraulically actuated) or manual valves should be placed in pipelines near liquefaction, landslide or active fault zones.

3.5.2 Appurtenances

A. Blowoffs

Blowoffs should be sized and located to drain their influential reach of a pipeline in approximately 8 hours. The locations for blowoffs should be at low points along pipelines or at critical points for flushing, i.e., if it takes longer than 8 hours to drain,

additional blowoffs should be added to the line. See Table 3-1 for a more detailed listing of the design criteria.

The downstream receiving system (including erosion potential) should be evaluated as to its suitability to accept the maximum flow from all affecting blowoffs. However, the DESIGN CONSULTANT should be aware that certain mitigating conditions mandated by the state of California Department of Health and Safety apply to the discharge of treated potable water into storm drains and natural drainage courses, and should consider those conditions when evaluating the downstream receiving system.

The blowoff discharge point should be located out of the traveled way, and if protruding aboveground, should be housed in an approved structure/enclosure. Where deemed appropriate by the CIP Project Manager, blowoff stations should include a pumping chamber to permit further withdrawal of water below the normal blowoff surface elevation, and energy dissipaters at the discharge point.

A 2-inch blowoff assembly as shown on SDRSD W-6 W-7, SDW-100 and W7C is placed on water mains up to 12 inches in diameter. Larger pipe sizes require either a 4-inch or 6-inch blowoff assembly (SDRSD SDW-100, W-8 and W-9), the size depending on the size of the main and the distance between blowoffs. For mains 12 inches in diameter and smaller, blowoffs may be excluded if a fire hydrant is located near the low point. Blowoffs are installed at dead-ends (SDRSD SDW-106).

B. Side Outlets

A side outlet (future or current) is simply a specified diameter tee or outlet branching off the main transmission line to allow future branch connections without taking the main pipeline out of service. See Table 3-1 for a more detailed listing of the criteria used for outlets.

Outlets for future connections have a buried isolation valve followed by a short spool pipe and a blind flange or dished head.

C. Cutoff Walls

In unpaved areas with steep terrain, water main and backfill are protected from erosion by cutoff walls (SDRSD S-10, Type A and B) as follows:

20% - 35% slope	Cutoff walls each 50 feet
35% - 45% slope	Cutoff walls each 40 feet
45% - 55% slope	Cutoff walls each 30 feet
55% - 65% slope	Cutoff walls each 20 feet
65% - 100% slope	Cutoff walls each 20 feet with cement-treated sand encasement around the pipe

D. Fire Hydrants

Fire hydrants must conform to AWWA C-503 and to the requirements of the Fire Department and the Public Utilities Department.

In general, fire hydrants are located at street intersections, but not more than 450 feet apart in single-family residential areas nor more than 350 feet apart in multifamily residential, commercial, and no more than 250 feet in industrial areas. Fire hydrants in the middle of blocks are located on lot lines. Fire hydrants are installed using the following criteria:

- When new water mains are extended in areas where fire hydrants are not needed for protection of structures, fire hydrants shall be installed at a spacing not to exceed 1,000 feet.
- For 8-inch or larger diameter dead-end mains, a maximum of two fire connections with either fire hydrants and/or fire services is allowed.
- For 8-inch or larger diameter mains when looped, two or more fire hydrants can be installed.
- No more than two fire hydrants (fire services) are allowed on dead-end mains or out-of-service at any time.
- Fire hydrant flow on a private fire hydrant located off a fire service may be reduced per the Uniform Fire Code analysis, assuming a static pressure of 65 psi at the main line.

In previously developed areas, affected property owners must approve the location of fire hydrants. In general, when a water main is replaced by a parallel main, the fire hydrant is moved 3 feet in either direction from its original location; when the main is replaced in place, the fire hydrant is replaced in its original location.

Fire hydrants in residential areas must have one 4-inch port and one 2½-inch port. Fire hydrants in commercial and anticipated high fire demands areas (e.g., the downtown area, schools, hospitals, and heavy industrial areas) must have two 4-inch ports and one 2½-inch port. Alignment of fire hydrant ports must be in accordance with SDRSD W-10. Fire services connected to fire hydrants are typically 6-inch in diameter. The DESIGN CONSULTANT should check (on a case-by-case basis) if an 8-inch diameter fire service is necessary to supply such fire hydrants.

Fire hydrants placed in unprotected (unimproved) areas must have protective posts (SDRSD SDW-102 and W-16) installed around them. Services to fire hydrants must be installed perpendicular to the water main, and may not be installed in cul-de-sacs.

In SDRSD W-11 (fire hydrant locations), Type “C” is preferred; Type “B” is acceptable; Type “A” requires approval from the CIP Project Manager; Type “D” is acceptable only for unimproved areas (no curb or sidewalk).

E. Fire Services

Fire service requirements are determined by the Fire Marshal. All fire services or private water mains must be valved at the main per SDRSD SDW-118 and have an approved backflow prevention device after it enters the property (see SDRSD W-26). Reduced pressure detector assembly devices are installed and include a factory installed detector meter assembly.

Fire service plans must show all existing onsite fire hydrants. The complete onsite water network must be approved by the Fire Department before a Fire Service Permit is issued.

When a water main is being replaced or relocated, existing unused fire services to fully developed lots may not be replaced or reconnected. Conversely, existing active fire services to vacant lots may be replaced or reconnected, unless a permitted building plan for the lot shows otherwise. Fire services must be replaced and reconnected in accordance with Section 306-15 of the City of San Diego Contract Documents (specifications).

F. Water Services

Water services must be 1-inch minimum size; 1½-inch and 3-inch services are not allowed. All water service connections to PVC pipe are made with a saddle for the following diameter services:

- 1-inch water services (SDRSD W-1 and SDW-100) must be copper pipe. If the improvement plans do not state the type of material to be used, copper pipe is specified.

- 2-inch water services (SDRSD W-2 and SDW-100) must be copper or PVC pipe. If the improvement plans do not specify the type of material to be used, PVC pipe is specified.

- 4-inch or larger services must be DI or PVC pipe and require an aboveground meter installation with bypass per SDRSD SDW-119 to be included on the improvement plans. Irrigation services are similar but do not require a bypass.

The City adheres to the requirements of the Uniform Plumbing Code, which states that a pressure regulating valve must be furnished on any individual water service having a maximum pressure greater than 80 psi. This maximum pressure is commonly the static pressure. However, for pressure zones supplied by pumps, the pump shutoff pressure is the basis for determining the maximum static pressure at the water services.

Water services must be installed perpendicular to the water main and tapped not closer than 30 inches apart. Taps to the end of a capped pipe must be a minimum of 15 inches away from the cap. In high-density areas (apartments and condos) water services may also be taken from a main extension (i.e., fire services as shown in Figure 3-1), subject to approval by the Public Utilities Department, to reduce the number of taps being made into the water main.

Size-on-size wet taps (6-inch to 6-inch, 8-inch to 8-inch, etc.) are not allowed. Size-on-size taps must be made with in-line “Tee” fittings.

When a water main is being replaced or relocated, the existing unused water services to fully developed lots may not be replaced or reconnected. Existing water services to vacant lots may not be replaced or reconnected unless a permitted building plan for the lot shows otherwise. In areas of anticipated urban redevelopment, existing water services serving vacant lots should be deleted from the drawings of replacement plans. To ensure proper credit for capacity for the property at the time of redevelopment, an adequate record of all services must be kept. Credit is not given for service renewal. The cost for reinstallation or

new service is paid by the owner/developer. The DESIGN CONSULTANT should check that the latest drawings for the water service in the area are used. An existing plan showing the services to be deleted and their addresses should be sent to the Information and Application Services Division of the Development Services Department, Geographic Information Systems (GIS) Section.

Common water services serving two or more lots are not allowed unless the lots are under a maintenance association and a copy of the Covenants, Conditions, and Restrictions (CC&R) covering maintenance of the services and payment of the water bills is provided.

Water services should not cross lot lines unless CC&R (covering maintenance) is provided. When this is impractical, a private easement sufficient to maintain and repair the service must be dedicated to the lot benefiting from the service.

Encroachment water services may be allowed for single family residential units when all the following conditions are met:

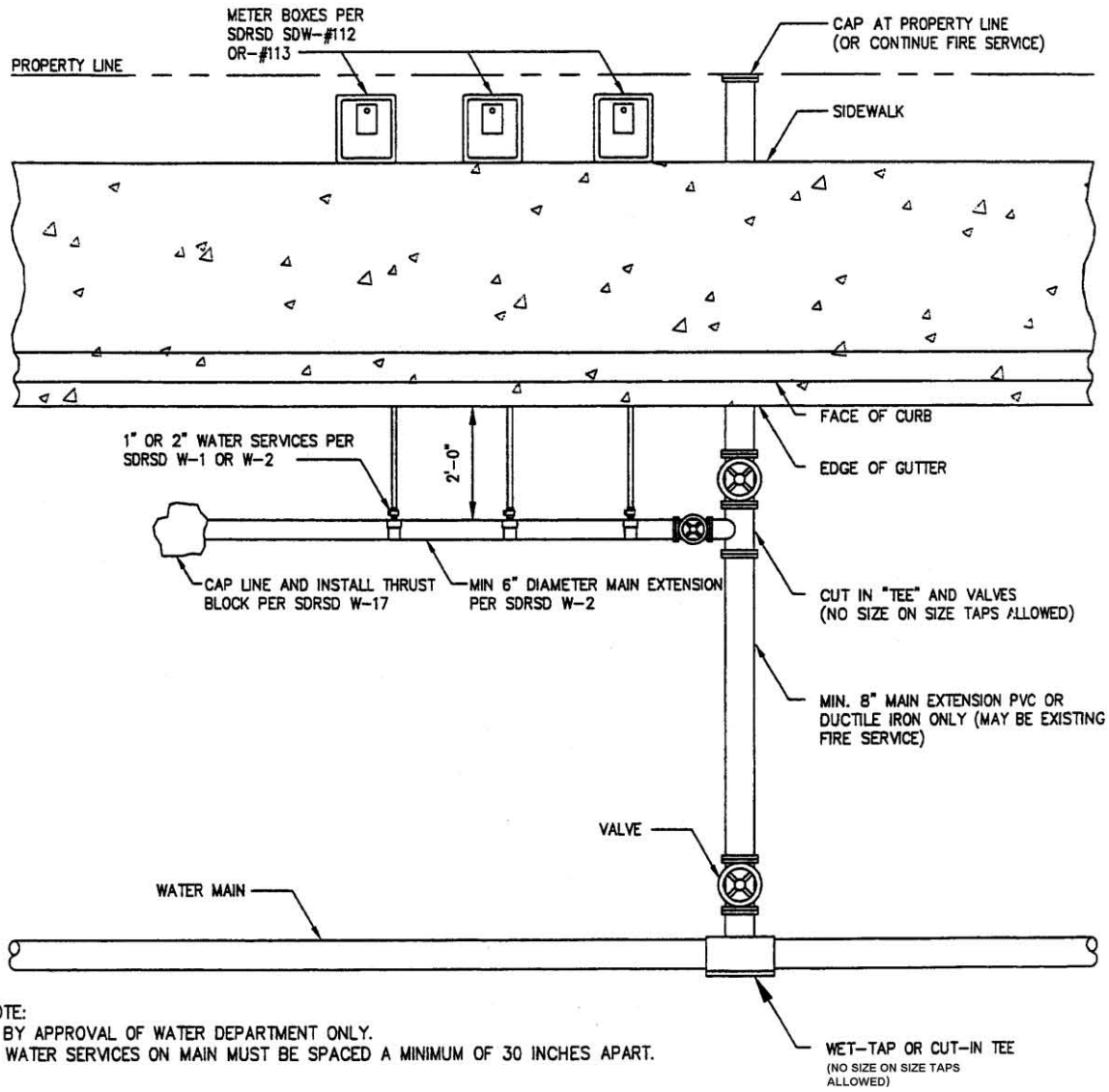

NOTE:
1. BY APPROVAL OF WATER DEPARTMENT ONLY.
2. WATER SERVICES ON MAIN MUST BE SPACED A MINIMUM OF 30 INCHES APART.

03/22/99

WATER SERVICES
TAKEN FROM MAIN EXTENSION
(NO SCALE)
(SPECIAL APPROVAL REQUIRED)

FIGURE 3-1

1. Installation of a fire hydrant is not warranted (per Fire Department)
2. The lot does not front on a public main
3. Ownership of the adjacent lot(s) does not belong to the subject lot owner
4. A temporary service agreement is recorded against the subject lot

Duplexes and higher density developments without frontage on an existing water main are required to extend the main to their own frontage if (a) there is a possibility of further main extensions, or (b) there are other lots that could connect to the new main at a later date.

Water services may not be tapped into easement mains except where the easement is 24 feet wide and is a paved, traveled way.

G. Water Meters

Water meters must be located in the public right-of-way (SDRSD W-15) or in an adequate easement. All new water services are located outside parking areas, driveways, or other traveled ways, with the following exception: if the service already exists, or sufficient area is not available outside of driveways to locate the service (cul-de-sacs, etc.), the installation of the water meter must be according to Figure 3-2 with a heavy traffic meter box.

Water meters 2 inches in size and smaller, must be installed in accordance with current regional and City of San Diego directives and standard drawings (SDRSD SDW-100, 112, 113, W-1, W-2, W-15). See Figure 3-3. Note that polymer concrete meter boxes are used in lieu of the standard concrete meter boxes.

Manifolded 2-inch meters must be located in the same vault (see Figure 3-4). Manifolded meters must have read holes with caps and chains situated over each meter (SDRSD SDW-115). When services and meters are to be manifolded, a detail must be included in the drawings. Meters may not be manifolded on the side of the meters facing the water main. Manifolded meters must meet all flow requirements.

A detail similar to SDRSD SDW-119 is required on improvement plans for meters 3 inches and larger. All meters 3 inches in size and larger require backflow devices. These meters must be built in an aboveground installation with reinforced concrete slab and protective fence. In areas where aboveground meter installations for larger meters are not feasible (i.e., downtown), meters in vaults may be installed (see Figures 3-5) with prior approval of the Water Operations Division.

Construction meters are assembled as shown in Figure 3-6 for meters 3 inches in size and larger. Smaller meters may be used with prior Public Utilities Department approval of meter installation details.

All details for meter installation in vault or on slab construction for meters larger than 2 inches must be approved by the Public Utilities Department prior to plan approval by the Development Services Department. Written approval, either on the drawings or by memorandum (referring to W.O.#, drawing number and development title) is required.

Requirements for backflow prevention must be in accordance with Public Utilities Department standards, and all details must be approved by the Public Utilities Department prior to construction.

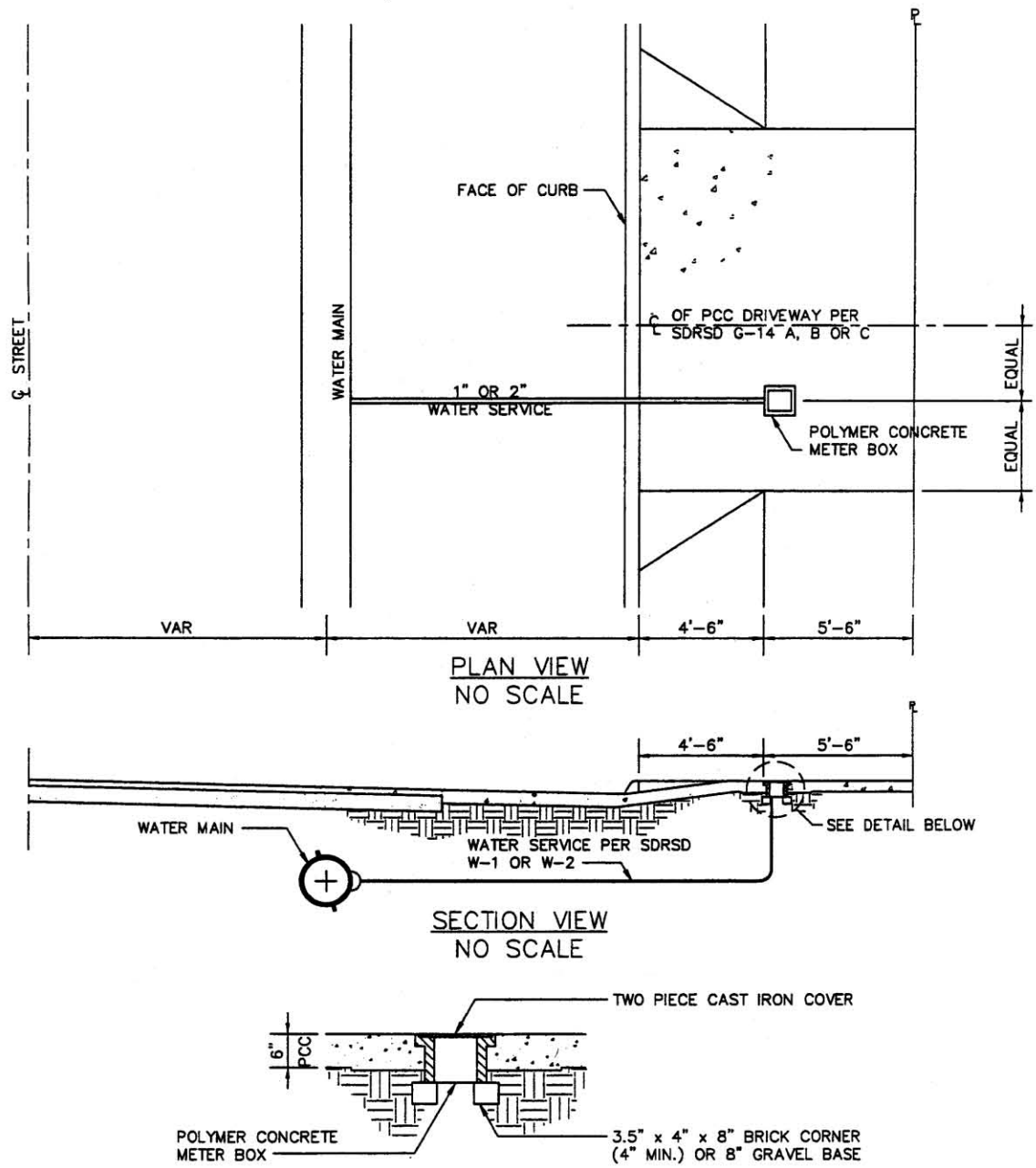

03/22/99

WATER METER IN DRIVEWAY
(SPECIAL APPROVAL REQUIRED)

FIGURE 3–2

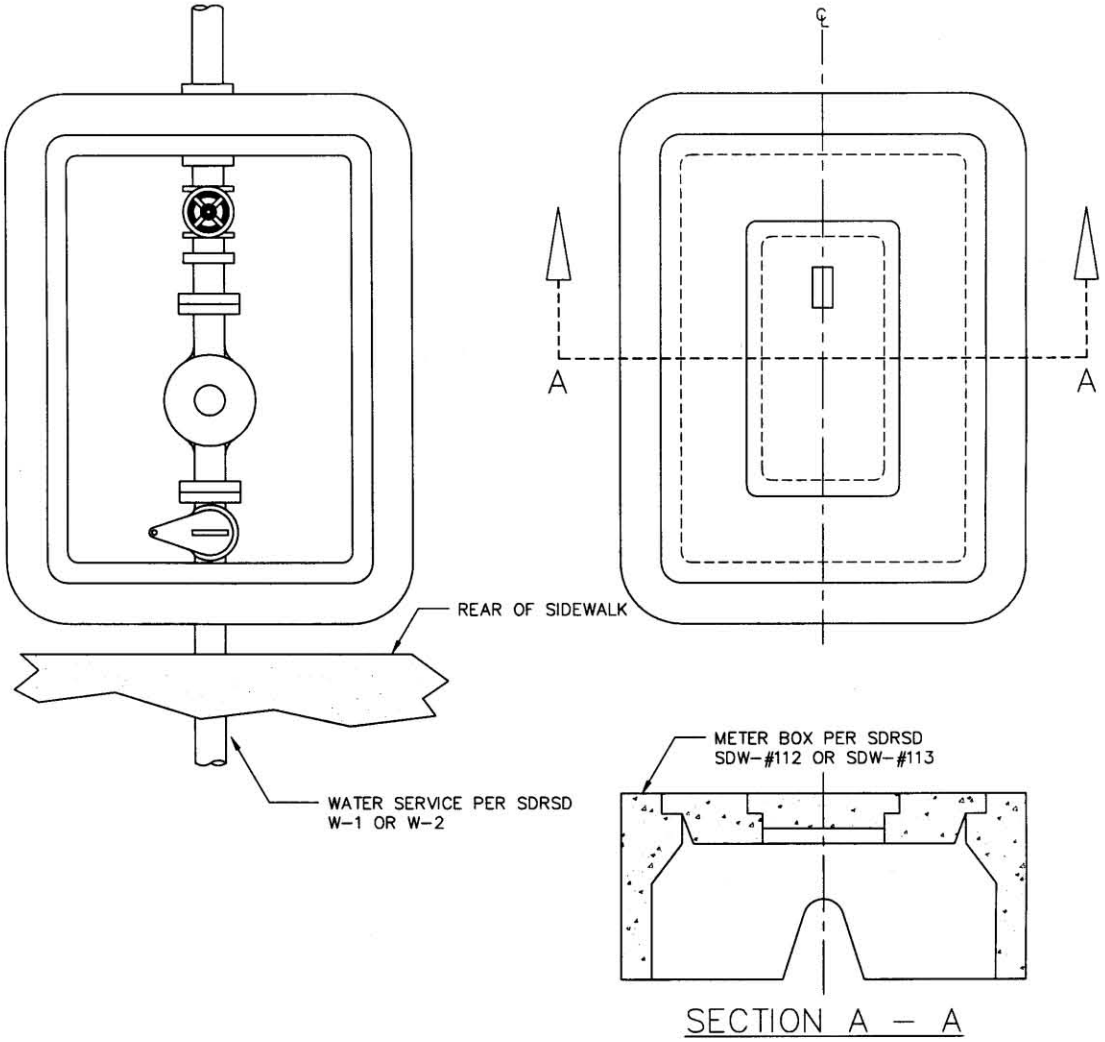

NOTE:
1. ALL METER INSTALLATIONS SHALL BE APPROVED BY WATER DEPARTMENT METER SHOP.
2. FOR LOCATION OF METER BOX, SEE SDRSD W-15 (A2 PREFERRED).
3. METER BOXES LOCATED BEHIND SIDEWALK MUST BE INSIDE EASEMENTS.

03/22/99 WATER SERVICE FIGURE 3-3

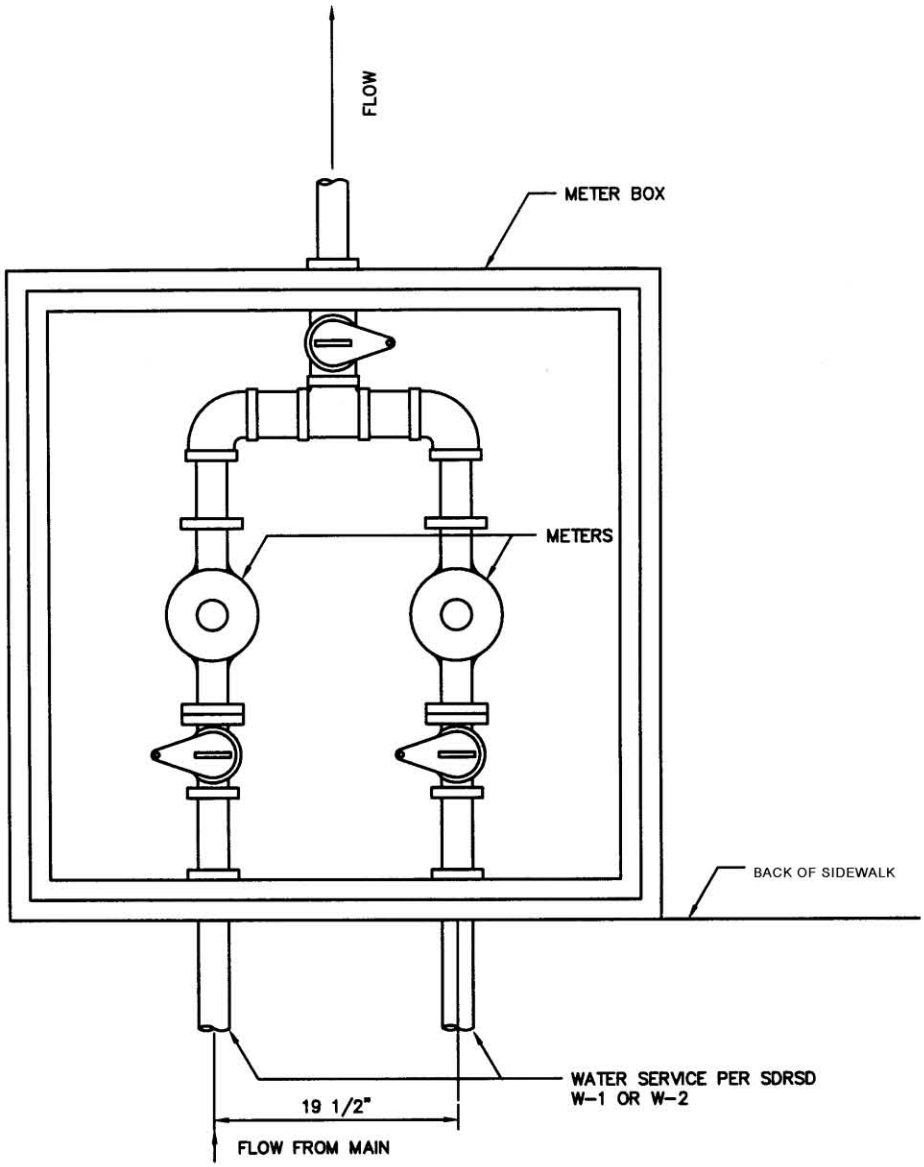

NOTES:
1. ALL METER INSTALLATIONS MUST BE APPROVED BY WATER DEPARTMENT METER SHOP PRIOR TO PLAN APPROVAL
2. WATER SERVICES ON MAIN MUST BE SPACED A MINIMUM OF 30 INCHES APART.

03/22/99 MANIFOLD WATER SERVICES FIGURE 3–4

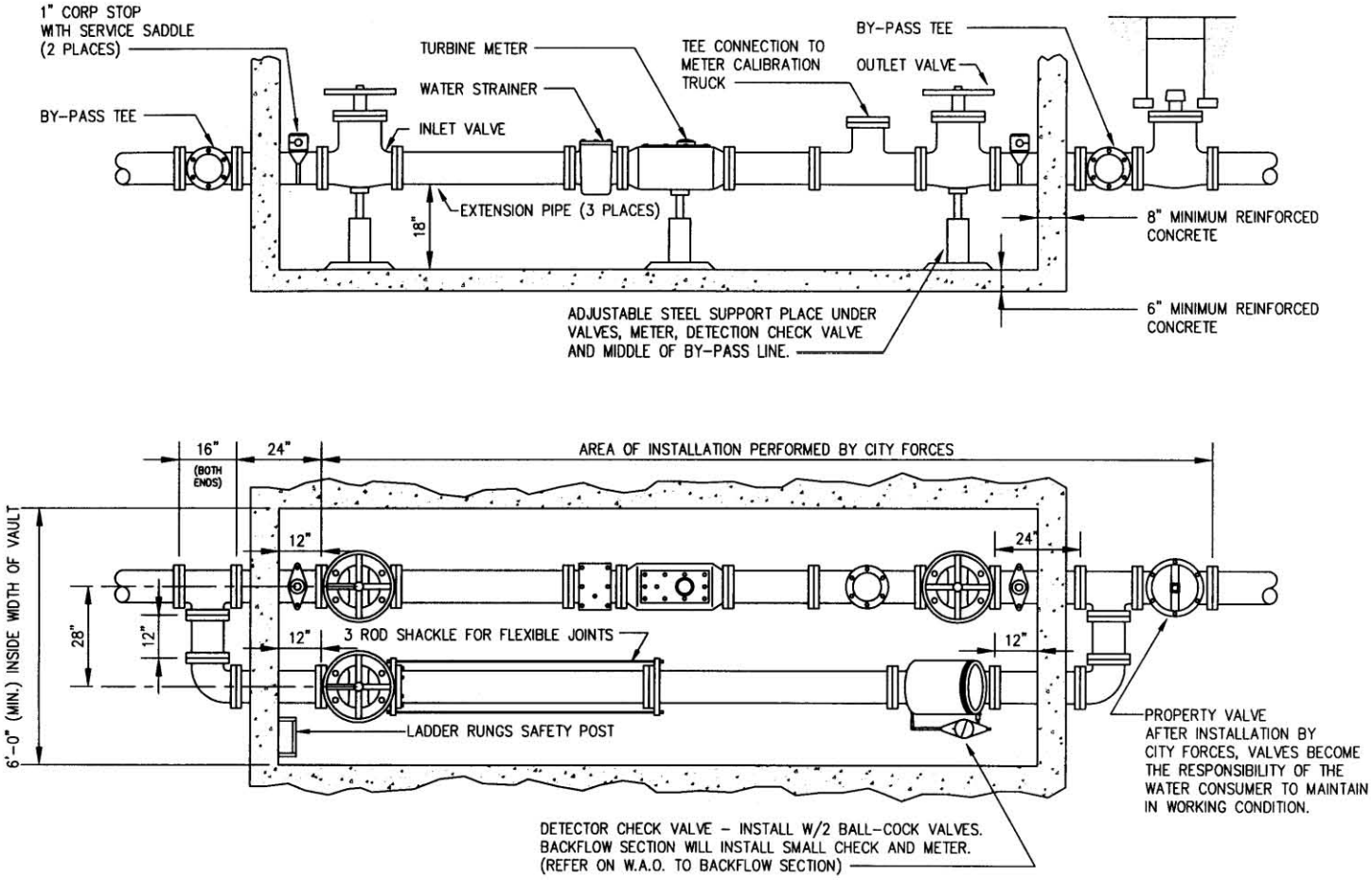

NOTE:
1. USE ONLY RESILIENT – SEATED GATE VALVES. BUTTERFLY VALVES ARE NOT ALLOWED.

03/22/99

3" DIAMETER AND LARGER
VAULTED METER SERVICE WITH FULL BYPASS
WITH DETECTOR CHECK ON BYPASS LINE.
(SPECIAL APPROVAL REQUIRED)

FIGURE 3–5

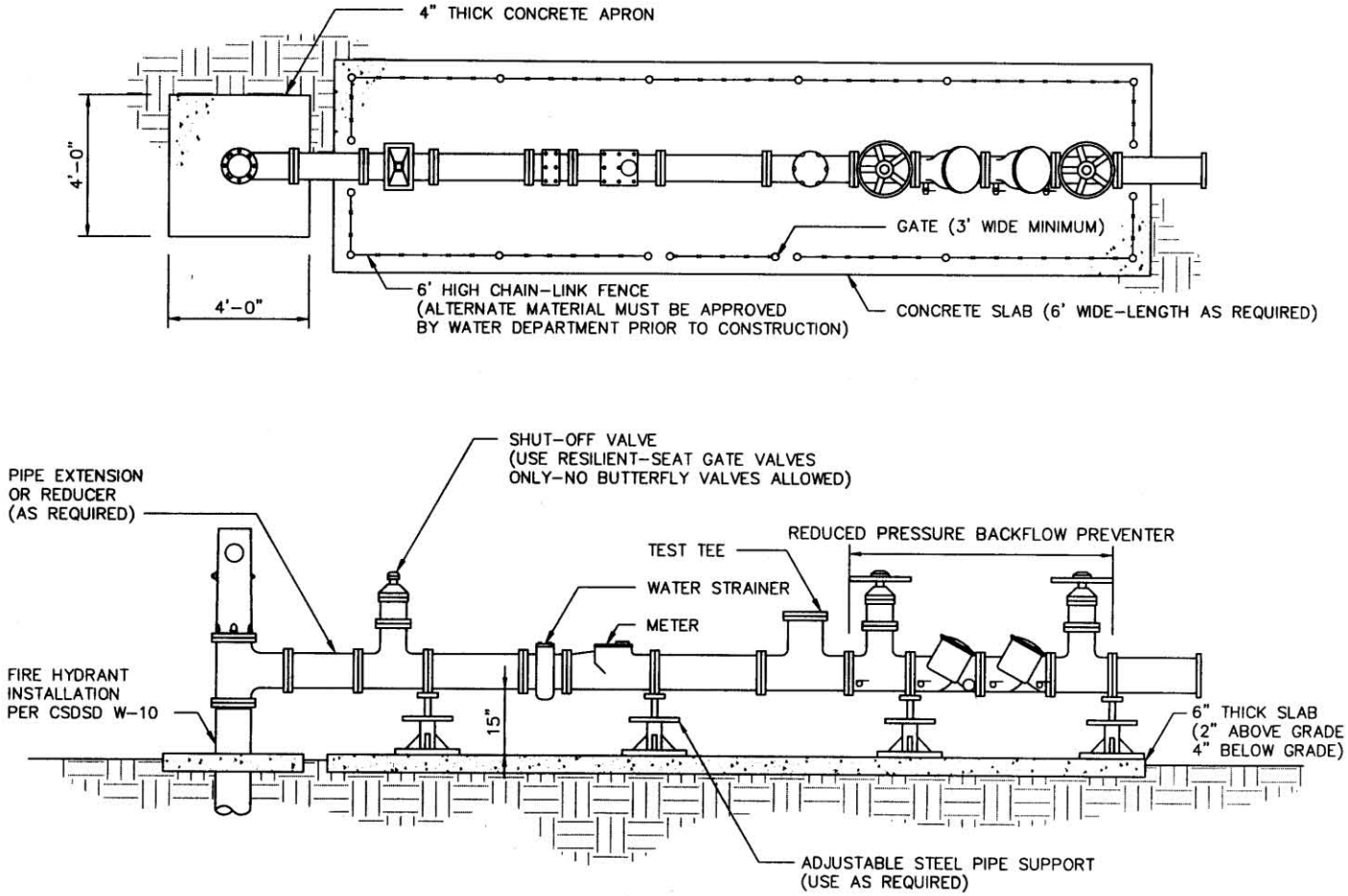

NOTE:
1. ALL PIPING PARTS SHALL BE FULL FORMED CAST IRON.

03/22/99

CONSTRUCTION METER -- 3" METER AND LARGER

FIGURE 3-6

3.5.3 Appurtenance Structures

A. Access Manholes

Pipeline access manholes at a minimum 20 inches in diameter (SDRSD SDW-103) are required on water mains 24 inches and 30 inches in diameter. 36-inch access manholes are required on water mains 36 inches and larger. The maximum spacing between access manholes shall be 1,600 feet. Access manholes and air valves should be combined if practical.

In general, full structures are located at approximately 1,600-foot intervals in developed areas and at approximately 3,200-foot intervals in undeveloped areas, with the partial structures located at the intermediate points between the full structures. In other words, there is an access structure approximately every 1,600 feet, but they alternate between a full structure and a partial structure in undeveloped areas. For both developed and undeveloped areas, a full structure should be included at all major special crossings. Actual access structure spacing depends on the topography along the pipeline. Proposed locations for the access structure are approved by Public Utilities Department. See Table 3-1 for a more detailed listing of the criteria used for the access structures.

B. Sampling for Water Quality

A 1-inch service should be tapped into the water line in these access manholes to enable sampling of the water to test for water quality.

Table 3-1
Appurtenance Criteria

Description	Criteria
A. General Appurtenance Design	
2. Consistency between design packages	Be consistent with overall project concepts for air valves, blowoffs, and manholes.
2. Standard engineering practice	Prepare the appurtenance designs in accordance with common standard engineering practices and industry standards, City of San Diego standard drawings, and per CIP guidelines and standards.
B. Air Valves	
1. Valve types	• Air release valves • Vacuum valves • Combination air/vac valves Combination valves are the most common valve type proposed.

Description	Criteria
2. Valve placement	1. Place air valves at all high points (combination valve). 2. Place air valves at grade breaks on steep slopes (combination valve). 3. Place air valves on long downward sloping sections (air release or combination).
3. Valve size	Size air valves as noted in paragraph 3.5.1 and per manufacturer's recommendations.
4. Valve number	Required valve capacity can be made up from a combination of smaller, less expensive valves.
5. Valve enclosure	Air vacuum valves are located aboveground in their own enclosures.
6. Pressure class	The valve pressure class to match the pressure class of the adjacent pipe.
7. Isolation valve	Each air valve has a separate isolation valve to allow removal under pressure.
C. Blowoffs	
1. Blowoff types	Major blowoff - Located at key drainage discharge points to be used for initial blowoff. Minor blowoffs - Located at low spots to drain off small residual amounts of water.
2. Blowoff placement	1. Place blowoffs at all low points. 2. Place blowoffs at appropriate drainage crossings.
3. Blowoff sizing	Size blowoffs as noted below: • Major blowoffs - 24 inch diameter pipe or larger. Size major blowoffs (4-inch minimum) to drain the pipeline in 8 hours) • Minor blowoffs - 12 inch diameter pipe or smaller (2-inch minimum blowoff diameter).
4. Energy dissipation	If blowoff water is discharged into open ditches or other waterways, an energy dissipation system is to be included with the discharge pipe. Design dissipation systems to effectively integrate with City streets, roadside ditches or waterways as applicable.
5. Vault	A vault for the blowoff is not required. All elements (except the energy dissipation) can be buried.

6. Pressure Class	The pressure class for all piping, valves, and fittings matches the pressure class of the adjacent pipe.
7. Pipe connection	The main pipe connection to be an inverted or tangential tee with flange sized to match blowoff pipe.
D. Line Valve	
1. Valve size and type	Match pipeline diameter; butterfly type valve unless recommended otherwise.
2. Valve placement	1. As recommended by DESIGN CONSULTANT and approved by Water CIP Project Manager. 2. Locate the valve at 2 mile maximum for transmission mains.
3. Bypass piping system	Provide a bypass piping system with valving for the mainline valve if appropriate.
4. Valve actuation	Manual actuator. Provide 2-inch operating nut; valve actuator gears to be sized to close the valve within the acceptable surge closure time.
5. Valve vault	A valve vault to be provided at the mainline valve for plug valves. Butterfly valves are buried unless otherwise approved by the CIP Project Manager.
6. Pressure class	The valve pressure class to match the pressure class of the adjacent pipe.
7. Thrust restraint	Provide thrust restraint.
E. Outlets	
1. Outlet type	Tee with isolation valve and blind flange or bumped head.
2. Location	As required by Public Utilities Department
3. Outlet size	As required by Public Utilities Department
F. Access Manholes	
1. Manhole types	• Manhole with access (includes manhole and access housing). • Manhole - buried (direct buried).
2. Manhole access locations	1. Manhole access to be provided at approximately 1600-foot intervals. 2. Alternate manhole with access structures and manhole-buried (in undeveloped areas). 3. Place manhole with access at all crossing locations that are difficult to access from the surface (i.e., in

	casing or concrete encasement). 4. Do not place access manholes over steeply sloping sections of pipe where an entering worker would not have safe footing.
3. Manhole size on water mains 36-inches in diameter and larger.	36-inch diameter manhole, vertical tee with flange and blind flange (hinged for the manhole with access).
4. Air valves	Locate air valves (where called out at a manhole) on the blind flange.
5. Pressure petcock	Provide a pressure petcock where appropriate to check line pressure.
6. Pressure class	The manhole pipe and fitting pressure class to match the pressure class of the adjacent pipe.
7. Sump pit	Provide a dewatering sump pit in the manhole access structures.

3.6 Fittings

3.6.1 Iron Fittings

Cast iron (CI) and ductile iron (DI) fittings with double-thick cement linings are used for DI and PVC pipe and conform to AWWA C-110 C-111 and C-153. All materials should be in accordance with the City of San Diego=s Approved Materials List.

All CI and DI fittings, valves, and appurtenances are coated per section 10-10.1 of AWWA C-110 and, when installed underground, are coated with a liquid epoxy or polyurethane.

The only acceptable joint for PVC pressure class water pipe-to-fitting connections is the mechanical joint (AWWA C-110 and C-111). Push-on joints and solvent cement fittings are not acceptable.

Crosses and tees are the same size in the run (straight) directions.

Use 11¼°, 22½° 45°, and 90° bends which are stocked locally.

3.6.2 Steel Fittings

Steel fittings must comply with ANSI/AWWA C208. Flanges must comply with ANSI/AWWA C207. Flanges are selected in accordance with design pressure, test pressure, surge pressure, and the drilling pattern of the adjoining equipment flange (i.e., valves).

Fittings for welded steel pipe are designed in accordance with standard practice as stated in AWWA M11 and other applicable industry standards. Bolt holes on flanges must straddle the vertical centerline. Welded steel pipe elbows are as follows: 0 to 30 degrees - two-

piece; 30 to 45 degrees - three-piece; 45 to 60 degrees - four-piece; and 60 to 90 degrees - five-piece. Joints for fittings are welded or flanged.

Reinforcement and wall thicknesses of steel fittings must conform to AWWA M11 and other applicable industry standards.

Field welding of all steel pipe must be in accordance with AWWA C-206 and the following City standard drawings:

SDW-101	Typical Outlet for SCRW Pipe Steel Pipe and Pipe Specials
SDW-103	Access Manhole
SDW-108	Field Welded Joints
SDW-111	Spigot Ring and Gasket Joint for Welded Steel Pipe
SDW-116	Bonding Strap for Steel and SCRW Pipe
W-24	Split Butt Strap

3.6.3 PVC Fittings

PVC pipe may be joined by a bell-and-spigot push-on joint in large diameters for straight length. In the push-on method, either (1) a rubber gasket set in a groove in the bell end or (2) a double bell coupling provides the necessary seal.

3.7 Joints for Steel Transmission Lines

Pipe joints for steel pipe are flanged, grooved, or plain end, depending on the pipe diameter, longitudinal force, flexibility requirements, the type of adjoining end, and the need to disassemble the joint. When lap-welded slip joints (commonly referred to as bell and spigot joints) are used, joint preparation must be in accordance with ANSI/AWWA C200 and the specifications must require that the pipe bell be shaped with an expanding press or by moving the pipe axially over a die. Shaping the pipe bell using offset rollers which move around the pipe end is not permitted. Joints in small-diameter pipe (less than 24 inches) associated with fittings must be welded, flanged, or grooved end. Rubber gasketed joints may be used for special design conditions.

Depending on the longitudinal force due to thrust and the effect of temperature, large-diameter transmission pipe joints may be lap welded or butt welded. The procedure for design of the joint to resist longitudinal forces is discussed in subsection 3.9. Butt strap joints may be necessary on closure sections or to connect to existing sections of the pipeline.

Closure joints as recommended by AWWA M11 section 8.6 should be included in the design of steel pipelines to minimize the effect of contraction due to changes in temperature.

3.7.1 Joint Welds

Joint welds may be lap welds, butt welds, or butt strap welds.

A. Lap Welds

The allowable force on a lap weld is computed by the DESIGN CONSULTANT. Note that the AWWA M11 procedure assumes minimal space between the bell and spigot surfaces. This space and the resulting eccentricity must be in accordance with the requirements of AWWA C200.

If the actual force is greater than the allowable force, three options should be considered:

1. Increase the wall thickness.

2. Use a double lap weld (one weld inside and one weld outside the pipe) instead of a single lap weld with a seal weld.

3. Use a butt weld instead of a lap weld.

B. Butt Joint Welds

Full penetration butt joint welds with appropriate inspection and nondestructive testing can resist a longitudinal force equal to the force resisted by the pipe wall.

C. Butt Strap Welds

The allowable force on a butt strap weld is computed in accordance with the procedure used for lap welds.

D. Seismic Design

See Chapter 8, paragraphs 8.4.2 and 8.4.3 for design guidelines for steel pipes where they cross active faults, liquefaction or landslide hazards. Depending on pipeline configuration, these guidelines may control the pipe wall thickness, welded joint designs and other construction details for steel pipelines used in these situations.

3.8 Bedding, Backfill, Cover and Surface Restoration

3.8.1 Bedding

When unstable soils are encountered and over-excavation is required, foundation stabilization material must be specified for use at the base of the trench. The pipe zone is considered to include the full width of the excavated trench from the bottom of the trench to a point at least 12 inches above the top outside surface of the barrel of the pipe. The minimum depth of bedding material beneath the pipe should be selected based on the expected unevenness of the trench bottom and the diameter of the pipe. Typically 6 inches is adequate; however, the DESIGN CONSULTANT selects the appropriate thickness to be used. Particular attention should be given to the area of the pipe zone from the invert to the centerline of the pipe to ensure that firm support is obtained to prevent any pipe lateral movement during final backfill of the pipe zone. Using controlled low strength material (CLSM) as directed in the Book 4, Specifications, Section 02200, in this area can mitigate

this concern. Hand tamping with approved tamping bars, supplemented by compacting with mechanical tamping equipment, is allowed.

3.8.2 Trench Backfill

The DESIGN CONSULTANT reviews the trench backfill provisions in the standard specifications for Public Works Construction and Book 4, Specification, Section 02200, and modify the provisions to meet the requirements of each project.

3.8.3 Cover

The normal depth of cover over the top of a water main is 3 to 5 feet. The maximum depth of cover is 8 feet. Less than 3 feet or more than 8 feet of cover requires the submittal of a special design, with complete load and safety calculations, and the approval of CIP Project Manager and Water Operations Branch.

Water mains located in high or heavy-load traffic areas and transmission water mains (16-inches in diameter and larger) require a minimum of 5 feet cover to the top of the pipe. The maximum depth of cover is 8 feet. Less than 5 feet or more than 8 feet of cover requires the submittal of a special design, with complete load and safety calculations, and the approval of CIP Project Manager and Water Operations Branch.

The operating pressure and depth of cover determine the class of pipe required in conformance with AWWA requirements for the type of pipe used. Class 150 psi pipe is the minimum pressure rating allowed. The class of pipe(s) is indicated on the profile of the drawings for the water main.

3.8.4 Surface Restoration

The DESIGN CONSULTANT refers to City of San Diego standard drawings. Surface restoration is required to match or exceed existing conditions according to the requirements of each agency with jurisdiction in the project area.

3.9 Pipe Design

All pipes are designed by the DESIGN CONSULTANT. Specials and fittings may be designed by the pipe manufacturer. The pipe design method depends on whether the pipe is rigid or flexible.

3.9.1 External Loads

External loads on a pipeline include dead loads (the weight of the soil and any improvements constructed above the pipe), live loads (caused by construction traffic and/or vehicular traffic traveling above the pipe), vacuum pressures, and pressures from groundwater.

A. Dead Loads

Dead loads attributable to the weight of the backfill are computed in accordance with AWWA standards as per specific pipe material using the compacted soil

weight determined in the geotechnical investigation. Dead loads caused by improvements constructed near or above the pipeline are computed by standard geotechnical engineering practices.

B. Live Loads

Live loads caused by standard highway loadings (HS-20) or railroad loadings (E-80) are computed in accordance with applicable AWWA standards. Live loads from heavy construction vehicles should be analyzed. Construction loads may occur when the pipeline has no or only minimal cover.

C. Vacuum Pressure and Groundwater

The DESIGN CONSULTANT computes the allowable internal vacuum pressure using the formulas described in AWWA standards for buried pipeline. For nonburied pipeline (e.g., above grade crossings or pipelines in casings without control density fill or similar situations), use the applicable AWWA standards. If the calculations indicate that the backfilled pipe could be collapsed by a full vacuum, the DESIGN CONSULTANT must notify CIP Project Manager in writing. The pipe must be designed to resist external pressure and uplift from groundwater when such conditions exist.

3.9.2 Internal Pressures

A. Operating Pressure

Operating pressure is typically determined from the hydraulic gradeline for the facility under static hydraulic conditions. However, if conditions warrant (e.g., for the discharge line from a pumping station), the DESIGN CONSULTANT investigates the combination of the operating and surge pressures and designs the facility accordingly. When not included in the predesign study, the CIP Project Manager provides both the static and operating hydraulic gradelines, except where the operating hydraulic gradeline is to be determined from pump selection by the DESIGN CONSULTANT. Pressure calculations reflect the difference in elevation between the hydraulic gradeline and the centerline of the pipe.

B. Field Test Pressure

Since field air pressure tests of all welded pipe joints and field hydrostatic pressure tests of a completed pipeline are conducted after pipelines are installed, the DESIGN CONSULTANT incorporates those factors into the pipeline design. The hydrostatic test pressure is typically equal to the maximum anticipated surge pressure, the pump shutoff pressure (where applicable), or 1.25 times the operating pressure, whichever is greater. The hydrostatic test pressure must not produce a hoop stress in the pipe wall exceeding that are recommended by AWWA M-11. Valves (body and seat) must not be subjected to test pressures greater than manufacturer's recommendations. In some cases, this may require an increase in the valve pressure class.

C. Surge Pressure

See subsection 3.10, Hydraulic and Surge Analysis.

3.9.3 Design Procedures

The design procedures to determine wall thickness consider the following conditions:

- Material type
- Minimum thickness for handling
- External loads
- Internal design pressure
- Internal surge pressure
- Maximum allowable deflection
- Longitudinal thrust forces caused by valves or changes in alignment
- Longitudinal forces resulting from changes in temperature
- Combined stress (hoop and longitudinal)

The pipe wall thickness selected must be the greater of the thicknesses computed for the loading conditions listed above. The design procedure at the joints is discussed in subsection 3.11, Thrust Restraint.

A. Minimum Wall Thickness for Handling

The minimum thickness for handling is calculated by the DESIGN CONSULTANT and as specified by AWWA standards.

B. Design for External Loads

Two conditions for external loads are considered:

- Live load plus dead load with full depth of cover.

- Live load plus dead load with minimal cover. The minimal cover used in the calculation must be coordinated with the specifications. The specifications must state the amount of cover required prior to operating heavy equipment above the pipe. The live loads must represent the heaviest equipment expected for use in compaction or hauling material above the pipe.

C. Design for Internal Pressure

The minimum wall thickness for internal pressure is determined by using AWWA standards. The allowable hoop stress at design pressure for cement mortar-lined and -coated steel pipe is limited to manufacturer's recommendations to minimize the potential for cracking of the coating as the pipe expands under pressure.

D. Design for Internal Surge Pressure

Minimum wall thickness for surge pressure is determined by using AWWA standards.

E. Thrust Forces Caused by Valves or Changes in Alignment

Longitudinal thrust force is calculated by using the method described in AWWA standards and as required by these Guidelines. Closed valves create the full "P x A" (pressure times area) force. This force may cause tension or compression in the pipe wall, depending on the location of the resisting forces. Bends in the alignment create forces as shown in AWWA standards.

F. Longitudinal Force Due to Change in Temperature

When pipe joints are welded, the temperature of the steel is probably higher than when the pipe is in service and conveying water. The stress in the pipe wall is a function of a change in temperature. The specifications must state the maximum allowable temperature of the steel when the closure joints are welded. The minimum temperature of the steel shall be considered 50°F. The force due to a drop in temperature, between the time the joints are welded and the pipe is placed in service, always creates tension in the pipe wall.

G. Longitudinal Force Due to Effect of Poisson's Ratio

Should the pipe be restrained from contracting, the maximum magnitude of the longitudinal stress induced by internal pressure is given by the formula:

Longitudinal Stress = (Hoop Stress) x Poisson's Ratio

For steel, Poisson's ratio is assumed to be 0.303. The longitudinal stress resulting from the effect of Poisson's ratio should be added to the stress caused by a change in temperature. The DESIGN CONSULTANT is advised that situations may occur where the total longitudinal stress includes the temperature stress, Poisson’s stress, and bulkhead thrust stresses.

H. Earthquake Loads

See Chapter 8, Section 8.4 for design guidelines for buried pipes under earthquake loading.

3.10 Hydraulic and Surge Analysis

3.10.1 Hydraulic Analysis

The Public Utilities Department CIP Project Manager supplies the DESIGN CONSULTANT with available information regarding system and project hydraulics. The information covers design capacity, sizing criteria, system head losses, and design assumptions. The DESIGN CONSULTANT reviews this information for completeness and adequacy.

Typically, transmission pipelines are designed using Hazen-Williams equation with C = 135. Calculations should include minor losses for valves and bends on the pipeline. For transmission lines, typical maximum pipeline velocity is 8 fps for 60-inch and larger pipeline, and 5 fps for pipelines smaller than 60-inch diameter.

Distribution water mains (smaller than 16 inches in diameter) should be designed to meet the pressure criteria and required fire flow plus maximum day demand at a maximum velocity of 15fps. Calculations should be based on C = 120 in the Hazen-Williams equation. In lieu of specific calculations for minor losses, calculated head losses are increased by 10% for fittings and other minor losses.

The DESIGN CONSULTANT requests any additional information necessary for the complete design before beginning the final design. The Public Utilities Department CIP Project Manager is notified of any conflicts or necessary changes that may affect the validity or accuracy of the hydraulic information provided.

The DESIGN CONSULTANT prepares the final design hydraulic calculations to verify that the final design is in conformance with the information provided.

3.10.2 Surge Analysis

A surge analysis is normally performed by others and forwarded to the DESIGN CONSULTANT in the early design stages. This surge analysis is considered preliminary because certain assumptions must be made to perform the surge analysis. As the final design progresses, some of those assumptions may require modification and the surge analysis must be updated.

The DESIGN CONSULTANT reviews the surge analysis information and coordinates with other designers responsible for pumping stations and reservoirs. Should additional information be necessary or should the assumptions made in performing the surge analysis be modified by final design decisions, the DESIGN CONSULTANT must notify the CIP Project Manager of the need for additional information and/or the need to update the surge analysis.

The pipeline DESIGN CONSULTANT verifies that the final design is consistent with the information provided with the surge analysis.

3.11 Thrust Restraint

Thrusts at all bends, tees, dead-ends, and reducers must be resisted by thrust blocks. The following standard drawings are used:

W-17 Typical thrust block installation
W-18 Bearing areas of thrust blocks (does not include safety factor)
W-22 Thrust anchor for reducer

The use of SDRSD W-20 for restraining upward thrust is avoided. Upward thrust is restrained by the use of ductile iron pipe with restrained joints.

Concrete used for thrust blocks must conform to section 201-1.1.2 of the Standard Specifications for Public Works Construction.

Thrust blocks for 16-inch diameter and larger mains are by special design. Calculations must be accompanied by a soil bearing test from a soils engineer. However, in the absence of a qualified soils analysis, a maximum soils bearing capacity of 1,000 psf may be used.

Calculations for an unusual anchorage condition must be submitted to the CIP Project Manager for approval. This submittal is accompanied by soils bearing capacity data from a qualified soils engineer. Calculations must be signed and sealed by a California registered civil engineer.

3.11.1 Thrust Restraint Systems

Thrust forces occur at changes in pipeline size or direction such as at elbows, tees, reducers, increasers, caps, plugs, closed valves, etc. Transient pressures caused by water hammer or pump shutoff head should be considered in conjunction with hydrostatic thrust forces.

When buried pressurized pipelines use push-on type bell and spigot joints that can separate (unrestrained joints), external forces are required to resist thrust. These forces could be provided directly by concrete thrust blocking, concrete thrust collars, anchorage to a structure, or by indirectly transmitting the forces to adjacent pipe sections by “restraining” the connecting joints. The forces in the adjacent pipe sections are then transmitted to the surrounding soil by a combination of soil friction and lateral soil pressure.

For large pipe diameters, welded joints are preferred. Therefore, the following discussion focuses on thrust restraint design for a fully restrained joint system. If external restraining forces are necessary, they must be designed using the methods described in AWWA standards.

Unrestrained joint systems are not used for Water CIP transmission pipelines because of the high pressures and large pipe diameters. The concept of restrained joint length is applicable to gasketed joint systems. DESIGN CONSULTANTS must design the complete thrust restraint system. A performance specification that requires the pipe manufacturer or contractor to submit a thrust restraint design for review is not acceptable.

A. Restraining Flexible Couplings

Flexible (sleeve) couplings transmit only minor tension and shear forces across pipe joints.

A restraining harness is required for full axial thrust force and must be designed in accordance with AWWA standards.

Where sleeved couplings are used within the required restrained joint length in either direction from an elbow, the following are required:

1. Anchor on each side of each sleeved coupling for the full resultant thrust force

2. Anchor on each side of the elbow for the full resultant thrust force

B. Restraining Fittings

With restrained joint systems, the thrust forces resulting from fittings cause longitudinal stresses in the pipeline. These stresses are most often tensile, but can under special circumstances be compressive.

C. Restraining Valves and Reducers

The requirements for fittings described in the preceding section also apply to valves and reducers. Additionally, valves and reducers can cause tension or compression in the pipe wall.

For a reducer within a system using welded joints, the DESIGN CONSULTANT should also recognize that the unbalanced thrust force can be transmitted upstream or downstream. In this case, the pipe joint system and restraining system is designed to transmit the force in either direction.

When cutoff (seep) rings are embedded in the wall of the structure, they are designed to transmit the full thrust load unless provision is made to prevent such load transfer. For maintenance, valves often require a flexible coupling nearby. If a harness is provided across the flexible coupling, it must not be considered to carry compressive forces.

3.12 Maintenance

Adequate access manholes and space must be provided for maintenance personnel and equipment. The recommended spacing for these structures is discussed in paragraph 3.5.3, Appurtenant Structures.

Maintenance of the cathodic protection system is discussed in Chapter 7 of this Book 2.

3.13 Special Crossings

3.13.1 Coordination with Agencies

The DESIGN CONSULTANT coordinates with the following agencies, as applicable to the CIP project, to determine any requirements to be included in the Contract Documents for design or construction at special crossings.

- Railroads: Metropolitan Transit Development Board or North County Transit District
- State Highways: Caltrans
- Streets: Local agencies
- Flood Control: City of San Diego
- Others: Utility companies with permitting requirements for crossings (See Book 1, Chapter 12)

A. Submittals to Agencies

Book 1, General Design Guidelines, provides specific procedures for submitting 75%, 90%, and 100% plans to the utility agencies that also apply to permitting agencies. In addition to these requirements, any additional information requested by a permitting agency must be submitted in a timely fashion. Any construction requirements by the permitting agency are included in the Contract Documents. The DESIGN CONSULTANT verifies permit requirements with the agency prior to submittal. Documents

submitted to other agencies must meet the requirements of CIP Records Management Document Control described in Book 1, Chapter 21.

B. Contract Drawings

1. Agency Standard Details

Any standard details provided by a permitting agency for construction near its facility are included in the Contract Documents in the appropriate permitting section of the specifications, along with specific permit requirements from the agency.

2. Crossing Details

Plan and profile views of all major crossings are provided in the civil drawing section of the contract drawings. Where a similar crossing is used at different locations (such as some highway crossings); only one detail shall be produced. All crossing locations to which the detail applies should be noted on the detail.

Conform to the design requirements of local agencies, including providing the necessary scour, geotechnical, and hydraulic data and analysis.

Unless otherwise approved, provide an access manhole structure/assembly with any special crossing in which the pipeline is tunneled or cannot be easily excavated. Examples include interstate freeway crossings, major drainage way crossings, railroad crossings, and major roadway crossings.

3.13.2 Bridge Crossings

This section provides design requirements, acceptable materials, and special items for water mains traversing bridge crossings. Corrosion control requirements are found in Chapter 7 of this Book 2.

A. Permits

A City Encroachment Permit is not required to install Public Utilities Department water pipelines or other utilities on City-owned bridges. However, compliance with these Guidelines for pipeline installation on bridges is required. Coordination between the bridge design engineer and the Public Utilities Department is essential. Predesign meetings are arranged prior to making any final design recommendation on a bridge project.

A Caltrans Encroachment Permit is required to install any pipeline or utility on a Caltrans bridge. This requires conformance with the requirements of the latest edition of the “Caltrans Manual of Encroachment Permits, Encroachments on Bridges.”

B. Location

Provide manhole access, materials, and equipment for operation, inspection, maintenance, and repair of all pipelines and appurtenances. See bridge-type details (Figures 3-7 through 3-10) for notes on access requirements.

Pipelines and appurtenances must be located under the shoulder or sidewalk area (i.e., between the exterior and first girder; Figures 3-9 and 3-12). In box girder type bridges, no other utilities may be installed in the same cell as water and sewer pipelines and appurtenances.

Where adequate access to utilities can be provided for maintenance, pipelines and appurtenances may not be exposed to view.

Consider the use of alternative pipeline locations and configurations, such as routing the pipeline around the bridge or using multiple smaller dimension pipelines, to improve the aesthetic and/or adapt to the physical limitations of the installation.

Use proven and tested engineering and design and construction standards to increase reliability and maintainability and to decrease repair frequency.

Provide piping materials suitable for point support and direct, not buried, exposure.

Provide pressure class and wall thicknesses in excess of that required for the design pressure to provide additional pipe strength and sacrificial wall material (i.e., use a safety factor of 2.25 instead of 2.0; design for pressures 50 to 100 psi greater than anticipated).

Size pipeline facilities in bridges shall accommodate future needs or provide casing to facilitate future expansion. Where required for redundancy, provide multiple pipelines.

During construction of closed cell-type bridges (Figure 3-7) with an enclosed ductile iron pipe system, one additional length of DI must be left in each cell. Seal both ends of extra pipe lengths to prevent debris accumulation inside pipe.

Shutoff valves on water mains must be installed within reasonable distances of each end of the bridge structure.

Provide expansion joints to accommodate relative expansion and contraction between the bridge and the pipeline, typically resulting from thermal effects. Since this type of movement is only in the axial direction, angular or translational movement expansion joints must be anchored at one location, with the remaining supports allowing axial movement. Pipelines must be anchored at all bends, valves, tees, and other thrust producing fittings, with expansion joints located appropriately.

Provide flexible joints to accommodate differential settlement, rotation, and axial movement between adjacent sections of pipeline where such movement is expected. This type of movement is expected at the junction between bridge and abutment, between abutment and embankment, and between soil masses with differing compaction, loading, and settlement characteristics.

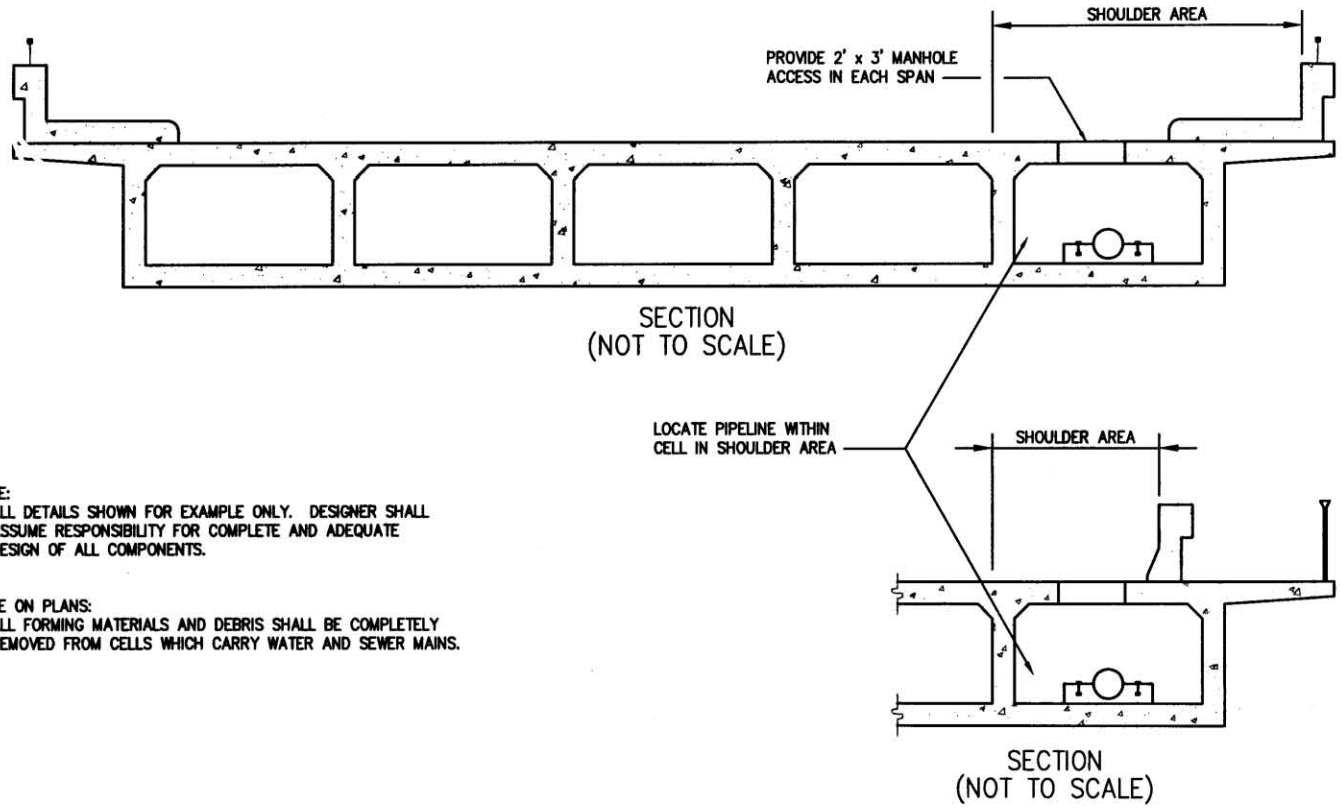

NOTE:
1. ALL DETAILS SHOWN FOR EXAMPLE ONLY. DESIGNER SHALL ASSUME RESPONSIBILITY FOR COMPLETE AND ADEQUATE DESIGN OF ALL COMPONENTS.

NOTE ON PLANS:
1. ALL FORMING MATERIALS AND DEBRIS SHALL BE COMPLETELY REMOVED FROM CELLS WHICH CARRY WATER AND SEWER MAINS.

03/22/99

BOX GIRDER TYPE

FIGURE 3–7

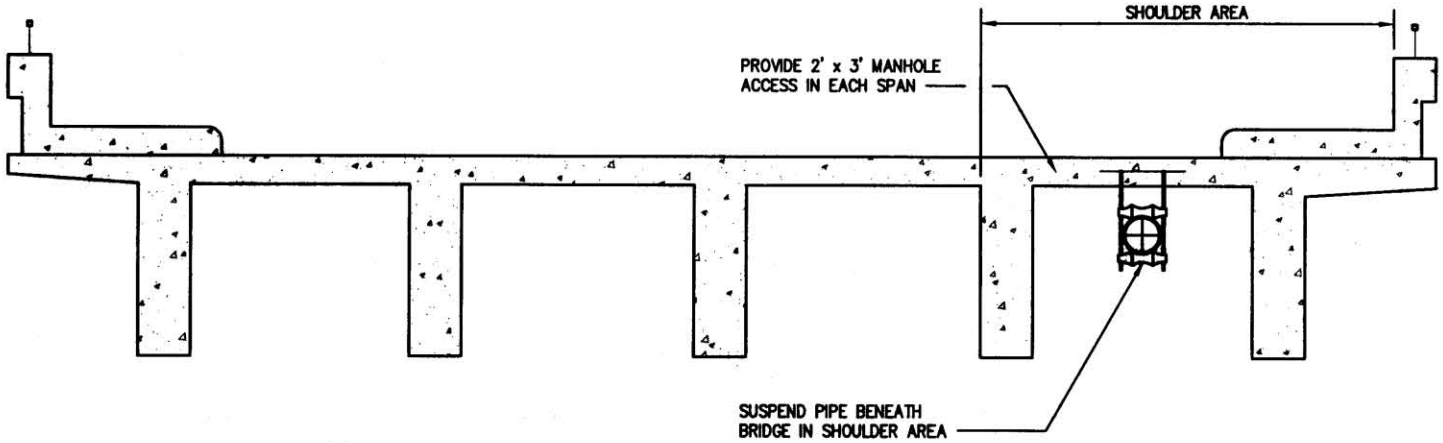

SECTION
NOT TO SCALE

NOTE:
1. ALL DETAILS SHOWN FOR EXAMPLE ONLY. DESIGNER SHALL ASSUME RESPONSIBILITY FOR COMPLETE AND ADEQUATE DESIGN OF ALL COMPONENTS.

03/22/99

OPEN GIRDER TYPES

FIGURE 3-8

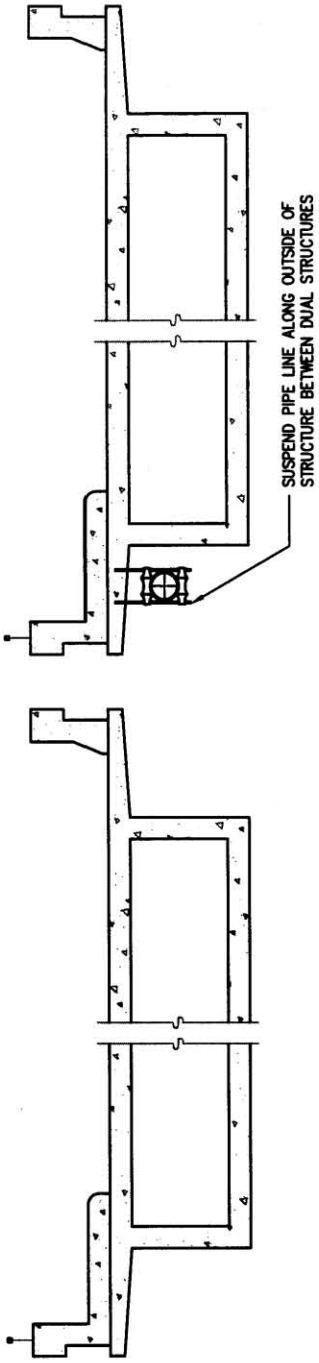

SECTION
NOT TO SCALE

NOTE:
1. ALL DETAILS SHOWN FOR EXAMPLE ONLY. DESIGNER SHALL ASSUME RESPONSIBILITY FOR COMPLETE AND ADEQUATE DESIGN OF ALL COMPONENTS.

03/22/99

DUAL STRUCTURE CONFIGURATION (ALL TYPES)

FIGURE 3–9

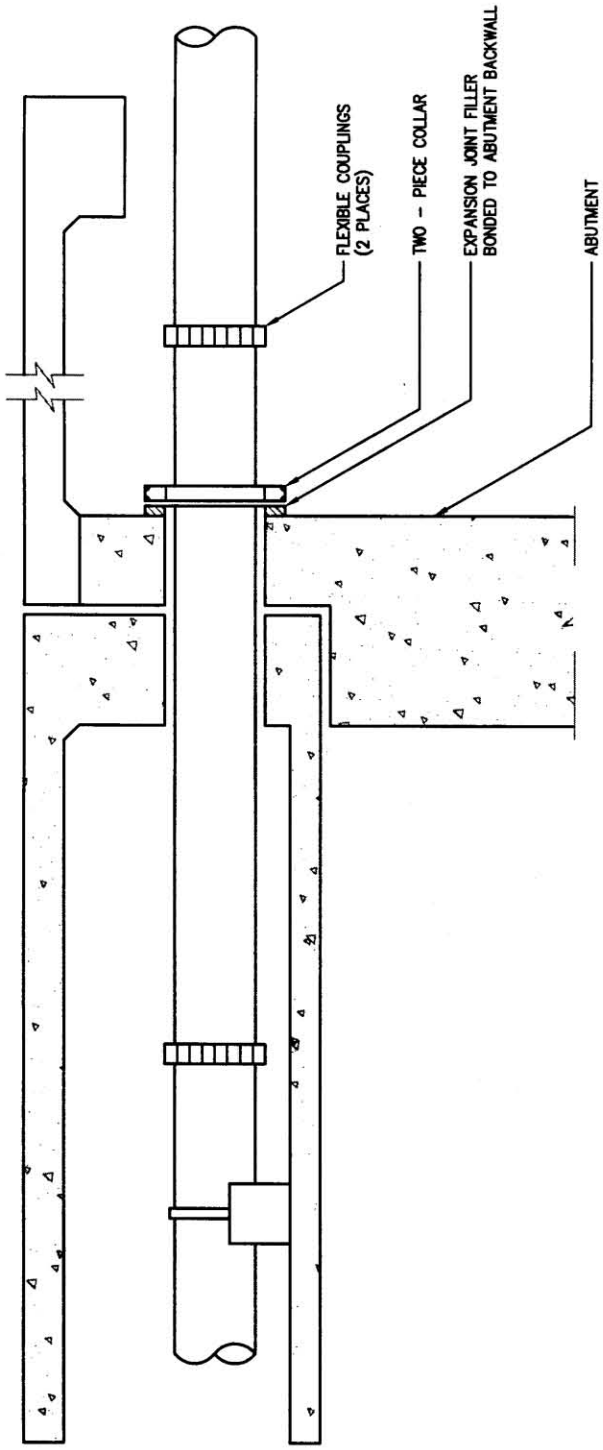

SECTION
NOT TO SCALE

NOTE:
1. ALL DETAILS SHOWN FOR EXAMPLE ONLY. DESIGNER SHALL ASSUME RESPONSIBILITY FOR COMPLETE AND ADEQUATE DESIGN OF ALL COMPONENTS.

03/22/99

ABUTMENT DETAILS

FIGURE 3-10

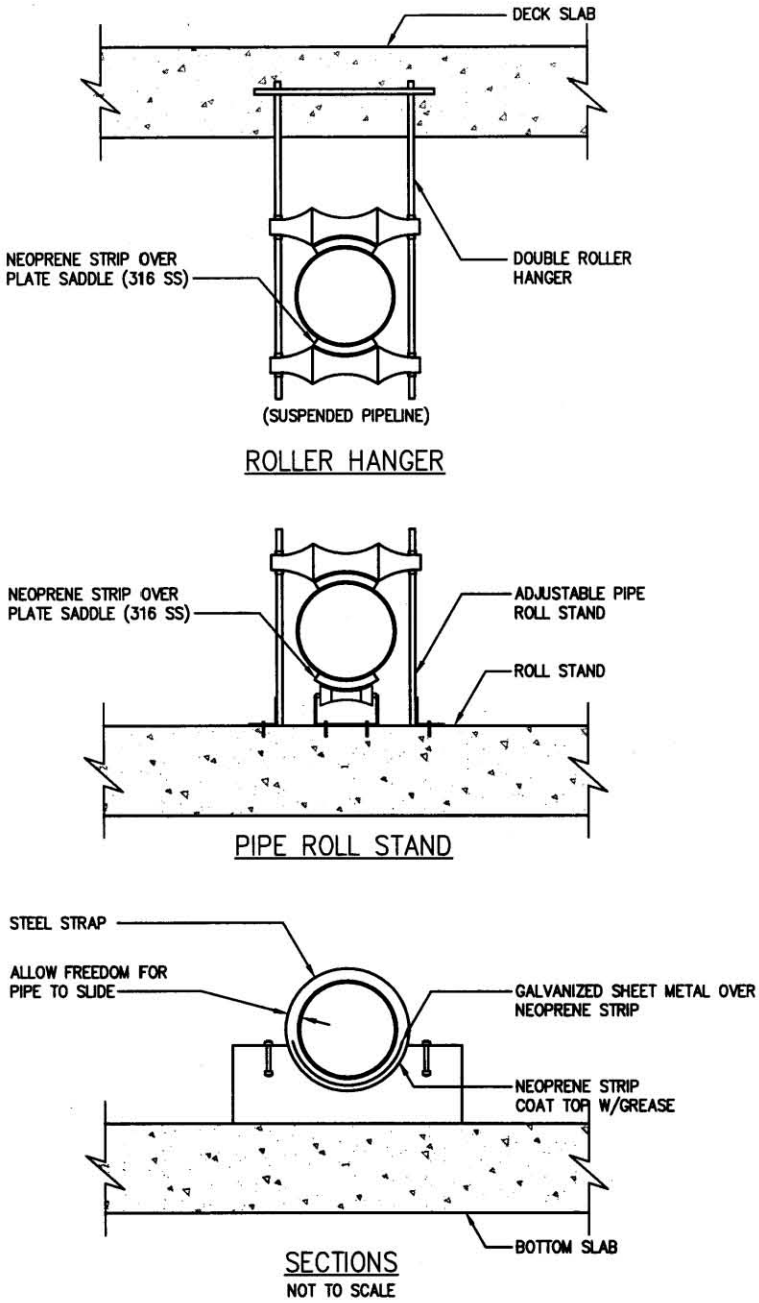

NOTE:
1. ALL DETAILS SHOWN FOR EXAMPLE ONLY. DESIGNER SHALL ASSUME RESPONSIBILITY FOR COMPLETE AND ADEQUATE DESIGN OF ALL COMPONENTS.

03/22/99 CONCRETE SADDLE FIGURE 3–11

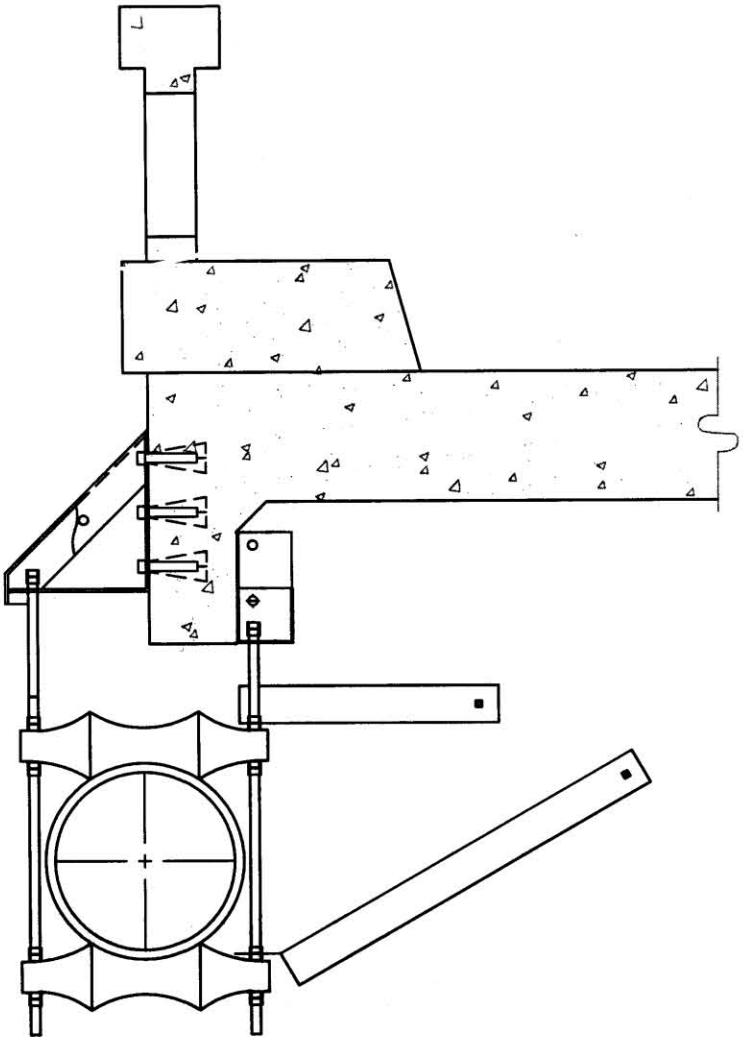

SECTION
NOT TO SCALE

NOTE:
1. ALL DETAILS SHOWN FOR EXAMPLE ONLY. DESIGNER SHALL ASSUME RESPONSIBILITY FOR COMPLETE AND ADEQUATE DESIGN OF ALL COMPONENTS.

03/22/99

TYPICAL DETAIL
WATER TRANSMISSION LINE
(EXAMPLE OF EXISTING INSTALLATION ONLY)

FIGURE 3–12

Design supports to provide free draining conditions and avoid trapping pockets of liquid or air in the pipeline.

Design pipelines for all imposed loads. Calculations should include checks for internal pressure, hydraulic transients, and seismic and wind loads. Longitudinal deflection should be limited to L/360. All thrust forces are calculated and resisted. Maximum thermal expansion and contraction are calculated and accommodated. Check bending, shear, and local buckling at supports.

Confirm that pipelines near an abutment to an embankment transition can accommodate large amounts of differential movement. Submit calculations with plans to the CIP Project Manager.

C. Pipeline Construction

1. Pipe Material

a. Welded Steel Pipe has a minimum design pressure of 150 psi, a minimum wall thickness/diameter ratio of 0.005, and sufficient wall thickness for welding (minimum 10 gauge, 0.1345 inch). Field welding is in accordance with AWWA C206. Pipe is cement mortar lined (minimum 3/4-inch for all diameters) per AWWA C205 and is coated with bituminous enamel or epoxy, or other protective coating, and painted through the bridge, where installed above grade. Below grade pipe installations are cement mortar lined (minimum 3/4-inch for all diameters) and coated (minimum 1.25 inches) per AWWA C205. In cases where water and sewer mains occupy the same cell in a closed-cell bridge, welded steel pipe only is used for the water main.

b. Ductile Iron Pipe has a minimum design pressure of 150 psi for water and conforms to AWWA C150 and C151. Pipe is coated per AWWA C210, C213, C214, C217 or C218, depending on service conditions. Water service pipe is cement mortar lined (minimum thickness two times that specified in AWWA C104).

2. Encasement

A pipeline in a bridge passing over a freeway, primary road or railroad must be encased. A box girder cell (Figure 3-7) may be considered the encasement if access is available for the full length of the pipeline in the structure, the pipeline is constructed of metal, and provisions is made to adequately drain the cell if the pipeline ruptures.

3. Available Joint Types and Characteristics

a. Flanged: Complete restraint against all movement. Limited tolerance for misalignment.

b. Welded Steel: Complete restraint against all movement. Tolerance for misalignment varies as follows:

- Butt weld - None except by trimming pipe ends
- Lap welded slip - Limited, less than 5□ angular
- Butt strap - Large tolerance for misalignment

c. Push On Joint: e.g., Tyton, Fastite, etc. Restraining against movement limited to friction between pipe and gasket. Restraint against axial movement can be increased by using special configurations and accessories. These configurations typically also prevent angular and translational movement, and thus are not suitable where movement other than axial is desired. The tolerance for misalignment is good. Many special configurations require special bell end casting as well, thus special pipe purchases are required.

d. Mechanical Joint: Restraint against movement is limited to friction between pipe and gasket. Restraint against axial movement is increased by using special gasket retainer glands, acceptable to the Public Utilities Department. These products typically also prevent angular and translational movement, and thus are not suitable where movement other than axial is desired. The tolerance for misalignment is good.

e. Grooved Shoulder Joint: e.g., Victualic, etc. Restraint against axial movement with allowance for limited angular movement. No expansion capability. Limited tolerance for misalignment. Good noise and vibration attenuation.

f. Restrained Push-on Joint: e.g., Super-Lock Tyton, Restrained Tyton, Boltless Restrained Fastite, TR-Flex. Restraint against axial movement with allowance for limited angular and translational movement. No expansion capability. Good allowance for misalignment.

4. Joint Application Considerations

a. Joints for Steel Pipe: Restrained joints may be flanged, grooved shoulder, lap-welded slip, butt strap, or butt-weld type. If restrained joints are used on bridges, the pipeline must be properly anchored and equipped with expansion joints. Intermediate supports must allow axial movement.

Sleeve couplings or rubber gasket joints may be used on bridges if each length of pipe is anchored. Joints must be capable of accommodating the expansion and contraction of each length of pipe and must not be restrained. Anchor supports must be located at the bell end of the pipe. Intermediate supports must allow axial movement.

b. Joints for Ductile Iron Pipe: Restrained joints may be flanged or grooved shoulder type, or other types with appropriate restraint features. If joints restrained against axial movement are used on bridges, the pipeline must be properly anchored and equipped with expansion joints. Intermediate supports must allow axial movement.

Sleeve couplings or mechanical and push-on joints may be used on bridges if each length of pipe is anchored. Joints must be capable of accommodating the expansion and contraction of each length of pipe and must not be restrained. Anchor supports must be located at the bell end of the pipe. Intermediate supports must allow axial movement.

c. Expansion Joints: Expansion joints may be bellows type or slip type with packing. Bellows must be stainless steel or elastomeric if available in the size, pressure class, and movement capability required. Expansion joints may not require limit rods (long bolts spanning the joint) if pipeline sections are properly anchored and single end expansion joints are used. Piping on either side of expansion joints must be properly

supported to minimize stresses on the expansion joint itself. A support directly below the expansion joint may be required.

d. Joints at Transitions: Bellows type expansion joints may provide sufficient angular and translational movement capacity for use at the bridge-to-abutment transition, if not restrained against movement in those directions.

The pipeline near the abutment-to-embankment transition must be capable of accommodating large amounts of differential movement. Where a casing is required, the casing must provide sufficient rigidity to prevent pipe damage, and a flexible coupling must be provided at the end of the casing. Where a casing is not provided, multiple flexible couplings or an expansion joint with ball and socket river crossing joint at each end must be provided.

5. Cathodic Protection

All pipeline sections must be made electrically continuous to facilitate future installation of cathodic protection for the pipeline. For further corrosion protection information, see Chapter 9 of Book 1.

D. Supports

The spacing of pipeline supports depends on the beam strength and rigidity of the pipe material and on bearing considerations at the supports. Supports must be designed to provide anchorage or axial movement as required by pipeline construction (see Figures 3-11, 12, and 13).

Provide neoprene and separate type 316 stainless steel plate saddle supports to electrically isolate the pipe from the bridge in the case pipeline cathodic protection is provided as part of the immediate or a future project.

E. Other Design Considerations

The inside diameter of penetrations and casings through pier caps, pile caps, abutments, or other transverse structural components of the bridge must be at least 8 inches larger than the largest pipe dimension (including bells or flanges, etc.), including considerations for future required pipe sizes.

Access hatches for pipelines and other utilities shall be at least 2 ft x 3 ft (Figure 3-7), oriented with the long axis parallel to the pipe.

Reasonable measures must be provided to prevent unauthorized access to pipelines.

3.13.3 Trenchless Construction

Trenchless technology construction methods may be required for special crossings and conditions. Examples include:

1. The pipeline depth is excessive due to site conditions, making conventional excavation uneconomical when considering materials handling and shoring requirements.

2. Environmental conditions such as riparian habitat at stream crossings do not permit conventional construction.

3. Disturbance caused by conventional construction to suburban, urban, or business community is not permissible.

4. At congested intersections where from a traffic or a utility standpoint, costly utility relocation, utility support/underpinning, or traffic control is avoided.

Because of increased urbanization, utility networks are growing in size and complexity. As these networks grow, the need for special crossings by trenchless construction methods are becoming more popular due to their inherent advantages. Trenchless excavation construction methods may be divided into three basic categories: pipe jacking, conventional tunneling, and horizontal boring.

The direct costs of trenchless construction are more expensive than conventional cut-and-cover pipe construction. However, social costs, environmental impact, and other indirect costs due to noise, dust, loss of business, parking revenues, traffic delays, etc. make trenchless excavation competitive. Also, problems with settlement, deep shoring, and utility relocation or support are avoided. Nevertheless, the DESIGN CONSULTANT may take advantage of economies of scale by packaging similar trenchless construction technologies together in the same construction package. Moreover, the DESIGN CONSULTANT should not structure bids to favor one construction method but allow flexibility for trenchless construction. For example, having utility relocation or tree removal and replacement in a separate contract biases receiving only cut-and-cover pipeline construction, whereas trenchless construction may be more favorable.

Each of the trenchless construction methods is briefly discussed in the following subsections. The following list of trenchless construction methods is not intended to be all encompassing, and is primarily intended for pipes in the 20-inch to 50-inch diameter range anticipated for the main transmission lines for the City's Water CIP.

- Pipe Jacking
- Tunneling
- Horizontal Boring
  - Auger method
  - Microtunneling
  - Slurry method
  - Directional drilling
  - Compaction/Pipe ramming
  - Percussive drilling

These categories are chosen for convenience. Many contractor and manufacturer innovations are occurring in this growing industry. Because of the nature of the industry, these categories are not necessarily discrete, but represent more or less a continuum of possibilities. Key to the success of these trenchless construction methods is defining the subsurface conditions; therefore each project is site-specific. Consequently, the DESIGN CONSULTANT should become familiar with possible construction methods and should refer to the latest available within the industry. Included at the end of this section are some technical references as well as sources for additional information. However, the DESIGN CONSULTANT and its geotechnical subcontractors should not provide direction as to the

means and methods, but performance requirements and limitations as required for the specific project (as set forth in the guideline specifications).

A. Pipe Jacking

Pipe jacking according to some classifications is distinguished from horizontal boring in that pipe jacking has personnel entry to assist in performing the advance, whereas horizontal boring is without personnel access. On the other hand, horizontal boring methods such as the auger method or microtunneling utilize hydraulic jacks similar to pipe jacking to advance the pipe, carrier pipe, or conductor casing. In essence, microtunneling and auger methods just have a more sophisticated method of advancing the pipe and removal of spoils. Regardless of the nomenclature, the minimum pipe diameter for conventional pipe jacking for personnel entry is about 30 inches for short distances and 6 feet for longer distances. Common sites are 48 inches to 72 inches. Although there is no limit to the size of pipe that can be jacked, the largest is usually about 144 inches. Also, with all these pipe jacking methods, the Contractor must design the jacks to overcome the skin friction developed between the pipe and the surrounding ground.

Friction acting on reinforced concrete pipes jacked through fills typically ranges from 100 to 600 psf of external surface area. Bentonite injected near the cutting edge of the pipe may reduce friction to about 100 psf. The development of special mud polymer lubricants has reduced the skin friction to about 25 to 50 psf where there has been a need. In many situations in firm soil, water alone is used as the lubricant. Because soil friction may increase with time, jacking operations should be uninterrupted. However, maintaining accurate line and grade and proper steering is as much as factor (if not more of a factor) of minimizing jacking forces as overcoming skin friction. After the pipe has been jacked, the lubricant may be replaced with grout.

For most situations, the practical limit for jacking is 1,000 to 1,200 feet. Intermediate jacking stations may be used; however, the shorter stroke length cuts the efficiency of the operations, thus increasing costs. Also, electric modifications, pumping considerations, laser limitations, hydraulic constraints, and reduced production make jacking long lengths uneconomical. Therefore, when long distances are involved, additional shafts should be considered. Alternatively, other methods such as tunneling or directional drilling require consideration.

Typically, the conductor casing or pipe is fitted with a simple cutting shoe or a small open shield to overcut the excavation and protect the leading edge of the pipe. During jacking in firm ground, soil materials are trimmed with care. The excavation face is also not advanced ahead of the jacking operation to minimize soil disturbance and loss of ground around the pipe. Some settlement can be expected, depending on the depth and diameter of the pipe.

Open shields have the advantage of accommodating the removal of cobbles, boulders, and obstructions. For larger diameter pipes above the groundwater table, where soils are susceptible to raveling, running, or sloughing, pipe jacking operations incorporate a shield with breasting tables and/or boards to minimize settlements. In firm ground, even wheel excavators are incorporated.

Spoil removal for conventional pipe jacking is by small muckers, rubber-tire low-profile load-haul-dump vehicles, rail, conveyor, or small cart. For smaller diameter pipes, slushers on pulleys have also been used.

B. Tunneling

Tunneling, like pipe jacking, implies personnel entry according to some classification systems. Unlike pipe jacking, curved alignments can be accomplished and excavation is feasible in hard rock. Also, the length of tunnel is not limited by the thrust of the pipe jacking rams.

As with pipe jacking, the means and methods of advancement and the initial support is the Contractor's responsibility. The DESIGN CONSULTANT and its geotechnical subcontractors are responsible for performance requirements and limitations applicable for each project.

Tunneling excavation and initial ground support methods are broadly classified into hard rock, soft/weak rock, and soils. The methods can be further subdivided under mechanized excavation or conventional excavation. Mechanical excavations may be by tunnel boring machines (TBM), shields, or mechanical excavators, of which there are a multitude of types. Conventional excavations may be by drill-and-blast construction or by hand construction, spaders, or other small equipment.

The smallest practical size for conventionally excavated tunnels is about 5-feet wide by 7-feet high, while for a circular shield or TBM excavated tunnel, the smallest practical diameter is about 4.5 to 6 feet, depending on the length of the tunnel. With the availability of used TBMs, drive lengths of less than 2-mile are competitive with conventionally driven small tunnels. TBMs also have the advantage of causing less disturbance to humans compared with drill-and-blast excavations when advancing through hard rock. While the guideline specifications provide for controlled blasting to limit peak particle velocities and damage to adjacent structures, the vibrations can disturb nearby residents. Where required, the DESIGN CONSULTANT should make a concerted effort and public outreach to educate affected parties about potential impacts. Nevertheless, unless there are special overriding considerations, as with all means and methods of trenchless construction, the DESIGN CONSULTANT should specify the use of either conventional or mechanized excavation. The marketplace, the Contractor's experience, and the Contractor's equipment dictate the methods.

Initial ground support depends on ground conditions. In hard rock, common support types are no support, patterned or random rock bolts and wire mesh, mine straps as required by ground conditions. In soft or weak rock, common support types include patterned or random rock bolts and wire mesh or mine straps as required; shortcrete; ribs and lagging; segmented concrete or steel liner; steel casing spilling and/or crown bars; and other combinations of these, as required by ground conditions. Soil requires similar initial support systems as for soft or weak rock; however, rock bolting methods and sparse support are generally not acceptable. The standard tunnel design practice is to not specify initial support unless incorporated into the final liner. Standard practice is for the DESIGN CONSULTANT to require submittal of the Contractor's tunnel work plan including initial support (to verify that the submittal meets industry standards without accepting responsibility for means and methods) under the category Review Submittal.

The conveyance of spoils depends on the excavation method but is typically performed for the City's Water CIP by rubber-tire low-profile load haul dump vehicles, conveyors, or rail cars for the anticipated tunnel diameter.

After tunnel excavation is completed, the pipe is installed or placed on saddles, cradles, or rollers, and backfilled with cementitious materials such as grout or cellular concrete. Since in some situations, the diameter of the final pipe is small in comparison to the diameter of the tunnel, the DESIGN CONSULTANT should investigate any cost savings or other benefits to be derived using this corridor for other utilities. In very special circumstances, a utility corridor with access may be considered or even required.

C. Horizontal Boring

Horizontal boring is common in earth. Recently, horizontal boring methods have also been used in rock; however, there are practical limitations for rock. Horizontal boring methods are distinguished from pipe jacking and tunneling in that personnel do not enter the excavation. From this standpoint, horizontal boring methods would classically limit the diameter of such operations to less than about 30 inches. With the advent of computerized steering and guidance systems, horizontal boring by the non-personnel entry definition have encompassed projects up to 12.5 feet in diameter.

Horizontal boring techniques briefly described in the following paragraphs include: auger method, microtunneling, slurry method, directional drilling, compaction/pipe ramming, and percussive drilling.

1. Auger Method

The auger method is a pipe jacking method in which removing spoils is accomplished by a continuous flight auger. The auger also transmits torque to the cutting head from the power source in the jacking/bore pit. The auger may be powered pneumatically, hydraulically, or by an internal combustion engine through a mechanical gearbox. Similar to conventional pipe jacking, the leading edge of the pipe is typically equipped with a cutting shoe. Bentonite is also used to lubricate the pipe and minimize sloughing. The Contractor must carefully monitor the position of the casing and the advance of the auger and cutting head to minimize the risk of unsupported excavated ground and potential settlements.

A steering apparatus attached to the outside of the casing at the cutting head and a water level sensing device for vertical control are commonly used to make minor grade adjustments. The horizontal alignment can be corrected to a minor amount on larger casings by withdrawing the augers and sending personnel through the casing to the leading edge to manually excavate and install wedges on the appropriate side. Water lines are sometimes added behind the steering head to facilitate spoil removal.

The horizontal boring equipment is commonly mounted on a track, but in some applications where large rights-of-ways are available, it is supported by a cradle suspended from a crane. Cradle-type horizontal boring operations are commonly referred to as “side boom” or “swinging” methods. Consequently, the jacking/bore pit construction is not as critical as for a conventional pit, since all preparatory work is done outside the pit and no workers are permitted to enter the pit. No foundation or thrust reaction structures are required; however, a jacking lug or deadman is installed at the bore entrance. Water level and steering apparatus systems for track-type horizontal boring is not appropriate for the cradle-type method. Cradle-type operations require pressurized steering systems. In urban and suburban areas, cradle-type operations are not feasible. Also, water utility lines tend to run parallel to roads and then turn, and large right-of-ways are not available.

2. *Microtunneling*

Microtunneling machines have taken sophisticated, hydraulically operated, and automated soft-ground tunnel boring machines such as slurry tunneling machines and scaled them down for diameters as small as 8 inches for excavation and spoil removal. Microtunneling, as with horizontal boring, in some classification systems, has evolved to encompass non-personnel entry of pipe jacking operations for which the record is about 12.5 feet in diameter. Microtunneling is considered a misnomer by some and is simply pipe jacking with an automated miniature tunnel boring machine ahead of the jacked pipe.

With the numerous manufacturers of microtunneling machines worldwide and the advent of trenchless construction, microtunneling is particularly advantageous for difficult ground conditions without the use of expensive dewatering systems or compressed air. Microtunneling also has extremely accurate alignment tolerances for long drives, making conventional horizontal boring and pipe jacking competitive for only the best of soil conditions and the shorter drives. Although most of the microtunneling equipment is designed to operate in soft ground soil conditions, there has been an increased demand for microtunneling machines which can also excavate soft/weak rock and even hard rock (within certain limitations).

Soft-ground microtunneling machines use the principle of “earth-pressure balance” TBMs in which the pressure applied to the cutting face equals the pressure from the ground against the cutting face, thereby providing full face control and preventing loss of ground and settlement. Some machines use pressurized water to assist in excavation. In competent firm ground this may be acceptable; however, in loose, running, or flowing ground, the principle of earth-pressure balance is not achieved and can lead to unacceptable settlements.

Because microtunneling machines are jacked, they have the same limitations with respect to jacking distances (1,000 to 1,200 feet) and curves as for pipe jacking.

Cobbles and boulders can make excavation difficult if not planned. Microtunneling machines can handle boulders and obstructions typically 1/5 to 1/3 of the diameter of the cutterhead depending on the type of cutterhead. To handle coarse-grained materials, microtunneling machines are typically equipped with eccentric cone-type crushers, jaw crushers, strawberry cutters (button bit carbide inserts), or multidisc kerf-type cutters with carbide inserts to break up cobbles/boulders prior to ingestion behind the cutterhead. The cutterhead is also armored with hard facing.

For the smaller diameter machines (less than about 4.5 to 6 feet), minidisc cutters 6 inches in diameter have been employed for short drives in hard rock. These disc cutters if worn, cannot be replaced without removing the entire machine or installing a rescue shaft. The small bearing area of minidisc cutters has experienced problems with their mounts and bearings in the past.

Torque is applied through an auger and thrust through the casing. The life of the cutter depends on the hardness and abrasiveness of the rock. The longest successful mini-hard rock TBM drive is less than 300 feet. The smallest diameter is about 24 inches. Although this technology is evolving and improvements are being made, where longer drives are

anticipated in hard rock, the DESIGN CONSULTANT should consider conventional tunneling. Moreover, means and methods are the responsibility of the Contractor.

Spoil removal for soft-ground microtunneling machines is typically by slurry using smaller slurry conveyance pipes and pumps as required. Another method is by auger similar to the horizontal boring auger, only a bentonite slurry is also injected at the cutterhead and conveyed by the augers to a holding tank (volume equal to one-shove) beneath the thrust jacks in the pit.

Spoil removal and rotation of cutterhead is accomplished by an auger for hard rock mini-TBMs (less than about 4.5 feet).

3. Slurry Rotary Drilling (SRD)

This method of horizontal boring is similar to the auger method in that it is typically executed using boring and receiving pits and is intended for straight line boring. However, a drill bit and tubing are used rather than a cutting head and auger. Drilling action is accomplished by rotating and pushing the drill tubing. A drilling fluid is also used which can be water, air, or bentonite slurry. The drilling fluid keeps the rotating bit clean and aids in spoil removal. Drilling fluid is delivered through the drill tubing and spoils return to the boring pit through the bore hole. In unconsolidated, noncohesive soils, bentonite slurry aids in preventing bore hole collapse and much of the slurry cuttings remain in the bore hole. Pilot holes are typically drilled first, then reaming bits are employed to enlarge the bore for the desired carrier pipe diameter. The drill bits are not directionally controlled and intermediate access pits are sometimes employed to ensure proper alignment of the bore path. Since the bit is unguided, the accuracy of the bore hole depends largely on subsurface conditions. Obstacles can deflect the drill bit off course, and operator experience plays a significant role in the bore's success and accuracy.

This method is most effective for bore holes from 2 to 12 inches in diameter; however, 48-inch bores have been successfully completed in stable soil conditions. Pipe installation is independent of the boring operation and thus any pipe material that is suitable for jacking or pulling can be installed. Installing pipe spans in the range of 40 to 75 linear feet is most common with this method. As pipe spans increase, so does the chance of unacceptably aligned bore holes due to the unguided nature of this method.

4. Directional Drilling

Many innovative features from the oil drilling industry have been applied to horizontal earth boring and have advantages over SRD. The terms horizontal directional drilling and directional boring apply to a wide range of techniques and applications. Two key features of directional drilling differentiate it from SRD. The first is that a drill motor powered by pressurized cutting fluid operates the drill bit rather than a rotating drill string. The second is that the drill bit is steerable and thus can be maneuvered around obstacles or to correct the bore path. These characteristics give directional drilling superior capabilities and wider applicability over SRD. Thus, it is the more common method of the two employed.

The steering ability of directional drilling results from the chisel shape of drill bits used which deflects it in the direction oriented. When the bit rotates, it progresses straight. Controlling rotating and push allows for drill bit steering. Drill string position is accomplished with a guidance system mounted in the drill bit assembly, and by magnetically tracking it from the

ground surface above the bore. For hard rocks and boulders, a rotary percussion cutterhead can be used.

Once a pilot hole is excavated, larger diameter bores are created by pulling back a large diameter cutter with the drill string (back reaming). The hole may be back reamed in a succession of increasingly larger diameters to achieve the desired final diameter. Special back reamers are available for hard rock or gravels. On the final back reaming, the finished desired pipe is pulled through. The use of directional drilling is particularly advantageous for river crossings.

Large percentages of gravels, cobbles, and boulders make drilling difficult and expensive. Steering accuracy is also an important consideration.

5. Compaction/Pipe Ramming

Impact moles or pipe ramming techniques, as the names imply, use a pneumatic system which punches through soil by a percussive action. The driving head is typically cone shaped using a stepped cutting head or a series of open steel tubes which punch through the ground, and is subsequently blown through, flushed free or emptied by reamers.

Another technique is to drive the pipe or casing directly without a cutting head. If the line is 6 inches in diameter or greater, the head is driven with an open face, with a band installed around the leading edge for reinforcement. This also reduces the friction from the following pipe. In some cases, water or bentonite slurry can be applied to the outside of the pipe for lubrication.

Diameters obtainable by pipe ramming vary from less than 2 inches to as much as 4.6 feet. Smaller diameter bores (less than 7 inches) are common in the United States while Europe and Japan have had great success with larger diameter impact moles.

Larger diameter pipe ramming can accommodate cobbles and boulders since there is no equipment is inside the casing for obstruction of these obstacles. Pipe ramming techniques used to install a smaller diameter pipe may not offer the same amount of flexibility in excavation.

Pipe ramming is worth considering because it is reported to save time and money in equipment and labor time compared with pipe jacking or other microtunneling techniques.

6. Percussive Drilling

Combining percussion action with rotary drilling has proven to be an effective means of drilling through hard rock and has been applied in some trenchless methods. Applying a down-the-hole (DTH) percussive drill in conjunction with a track-type auger set up has been used to horizontally bore through hard rock. The largest DTH bit available is 43 inches in diameter and is reported to have been applied in lengths in excess of 1000 feet.

DTH hole percussive bits are pneumatically powered for percussion energy, and rotation and thrust are supplied by the drill rig. Hole cuttings are removed by the air supplied to the bit and are guided back to the bore pit in the annulus between the drilling shaft and the

casing. Drilling hammer accuracy improves with harder ground conditions. This method is non-steerable and thus initial setup and alignment are critical to boring to the receiving pits. Large diameter bores are typically accomplished by drilling a small pilot hole and then opening the hole with larger bits in subsequent passes. The limitations of this method are the environmental impact during initial startup due to the percussive impact at the surface and dust control from cuttings blown out by the compressor throughout the operations.

D. Pipe for Trenchless Construction

With all these trenchless scenarios, a carrier pipe or conductor casing is jacked and installed. Typical pipe is reinforced concrete pipe, corrugated metal pipe, or sheet steel pipe in 10- to 20-foot sections. Crossings under county or state highways require a steel conductor casing. The final pipe is installed on saddles (by rollers, cradles, or slurry) which are later backfilled with cementitious materials such as grout or cellular concrete.

Alternative one-pass liners with a sacrificial steel liner cast with an internal steel liner have also been manufactured in the past. Other one-pass linings for potable water pipes are available. These specially coated linings have a sacrificial layer in addition to normal corrosion protection. They are patented and offer a flush bell with an interlocking joint that seals pressures to greater than 300 psi.

Directionally drilled one-pass lining installations use welded steel pipe, also with a sacrificial coating for installation.

Trenchless constructed pipes may have special transition pipelines or vaults required on either side of the bored subsurface crossing. The DESIGN CONSULTANT should refer to subsection 3.5 of this chapter for design criteria for valves, appurtenances and structures.

E. Jacking Pit

Minimum size jacking pits depend on the size of the pipe being installed. For the 20-inch to 50-inch diameter range, the minimum width for jacking pits range from about 8 feet to 15 feet, and the minimum length will vary from about 20 to 40 feet, depending on equipment and pipe length. Minimum size receiving pits will vary from about 6-foot to 10-foot diameter.

With directional drilling, a jacking it is not necessarily required. With any trenchless method, however, a small staging area is required adjacent to the work area and is typically a minimum of 5,000 square feet.

Although the Contractor is responsible for these items, the DESIGN CONSULTANT and its geotechnical subcontractors should provide geotechnical criteria that enable the Contractor to design the shoring and foundation for its equipment. Also, the DESIGN CONSULTANT should consider the Contractor's staging requirements and need for jacking and receiving pits when planning special crossings.

F. References

Substantial material (e.g., manuals, guidelines, videos, and references and associations) has been published about trenchless construction. The American Society of Civil Engineers has a draft "Standard Construction Guidelines for Microtunneling"

(November 1998) that are under committee review. The following are a few sources provided to the DESIGN CONSULTANT as a primer and introduction to trenchless construction references.

- Boyce, G.M, and Cross, T.R., 1997, A 10-year review of microtunneling in North America, in J.E. Carlson and T.H. Budd, eds., Proceedings of the Rapid Excavation and Tunneling Conference, Society of Mining Engineers, Las Vegas, NV, June, 22-25.

- Hancher, D.E., White, T.D., Iseley, D.T., 1989, Construction specifications for highway projects requiring horizontal earth boring and/or pipe jacking techniques, Joint Highway Research Project No: C-36-672, File 9-11-26, Conducted for Indiana Department of Highways for Purdue University.

- Iseley, D.T., 1990, Trenchless excavation construction: microtunneling the United States experience, in R. Sinha, ed., Proceedings of the International Symposium on Unique Underground Structures, Colorado School of Mines and U.S. Bureau of Reclamation, Denver, Vol. 2, Chap 92, June.

- TRB (Transportation Research Board), 1997, Synthesis of Highway Practice, 242, Trenchless Installation of Conduits beneath roadways, National Cooperative Highway Research Program, Iseley D.T., and S.B. Gokhale, eds., National Academy Press, 76p.

Associations:

- North American Society for Trenchless Technology
  1655 N. Ft. Myer Drive, Suite 700
  Arlington, VA 22209
  phone: (703) 351-5252 fax: (703) 739-6672

- Directional Crossing Contractors Association
  One Galleria Tower, Suite 1940
  13355 Noel Road, LB 39
  Dallas, TX 75240-6613
  phone: (972) 386-9545 fax: (972) 386-9547

- Trenchless Technology Center
  Louisiana Tech University College of Engineering
  P O Box 10348
  Ruston, LA 71272
  phone: (800) 626-8659, (318) 257-4072
  fax: (318) 257-2777

- National Utility Contractors Association
  4301 N. Fairfax Drive, Suite 360
  Arlington, VA 22203
  phone: (703) 358-9300 fax: (903) 358-9307

3.14 Pipe Trench Width and Handling

The DESIGN CONSULTANT determines the appropriate trench width by considering the pipe size, depth of cover, type of material to be removed, the space required to install the pipe and operate equipment, and general construction practices.

The trench should be as wide as necessary for proper installation of the pipe and backfilling, and should provide adequate room to meet safety requirements for workers.

3.14.1 Field Control of Trench Width

The method and equipment used to excavate a trench depends on the type of material to be excavated, trench depth, and space available for trenching operations. The choice of method and equipment is typically left to the Contractor. The contract specifications should include provisions for corrective measures to be used by the Contractor if allowable trench widths are exceeded, except when safety requirements dictate a wider trench. The DESIGN CONSULTANT reviews the trench width provisions in Book 6, Standard and Guide Specification, DCN 4232, Section 02200D, and amends it as necessary to meet specific project requirements.

The DESIGN CONSULTANT should ensure that the Contract Documents provide for verification that pipe wall design is adequate to meet loading requirements for the actual trench configuration.

3.14.2 Effect of Trench Width on Pipe Loading

Excavating trenches in natural or undisturbed soil and backfilling the trench is called “open-cut” construction. The pipe is subjected to a vertical soil load resulting from two major forces. The first is produced by the mass of the prism of soil within the trench and above the top of the pipe. The second is the friction or shearing forces generated between the prism of soil in the trench and the sides of a shallow or rectangular trench. The width of the trench affects both forces.

Backfill settles at a faster rate than the undisturbed soil surrounding the trench. This downward movement of backfill induces upward shearing forces that support a part of the weight of the backfill. The resultant load on the horizontal plane at the top of the pipe within the trench is equal to the weight of the backfill minus these upward shearing forces. Unusual conditions, such as poor natural soils, may change these conditions.

For rectangular trenches and embankment conditions, the width of the trench affects the dead load calculations. Refer to subsection 3.9.1, External Loads, for the determination of pipe wall thickness on the basis of external loading and internal pressure conditions. Trench width determination should also consider the size of pipe to be installed, soil conditions, equipment to be used for trenching operations, and safety considerations.

The DESIGN CONSULTANT reviews Book 4, Standard and Guide Specification, and amends it as necessary to meet specific project requirements for pipe handling, bedding, backfill, and surface restoration. Contract provisions must also meet or exceed the requirements of the following documents:

3.14.3 Trenching

The Book 4, Standard and Guide Specification, Section 02200, contains specific provisions for trench excavation. The DESIGN CONSULTANT reviews and amends these provisions as needed to meet the needs of the specific project.

Trenching must also conform to the applicable standards of the agency with jurisdiction in the area that construction occurs. Book 1, General Design Guidelines, contains additional requirements regarding contaminated soils or groundwater in Chapter 11.

An adequate shoring safety system must be designed for trenches exceeding 5 feet in depth or trenches in unstable soil for any depth. The safety system must meet the requirements of applicable local and state construction safety orders and federal requirements. Contract Documents must require that the Contractor submit a trench excavation plan showing the design of the shoring, bracing, sloping, or other provisions for worker protection from the hazards of caving ground during construction.

3.15 Communications

Instrumentation requirements are based on the needs of the project and as specified by the CIP Project Manager.

Book 2

Facility Design Guidelines

Chapter 4
Pressure Control Stations

City of San Diego Water Department
Capital Improvements Program

Chapter 4
PRESSURE CONTROL STATIONS

4.1 Definition

Pressure control stations serve the following functions:

- Regulating/reducing stations maintain constant downstream pressure regardless of changing flow rates and/or varying inlet pressures. They are typically used to supply an area of lower pressure from an area of higher pressure.

- Sustaining stations throttle flow rate when the upstream pressure approaches the set pressure on the upstream side of the station and close completely if the set pressure cannot be maintained. They are typically used to prevent demands in an area of lower pressure from depleting the pressure in the area supplying it.

- Relief stations maintain constant upstream pressure by relieving flow (and excess pressure) to the downstream system. They are typically used to prevent pressure surges in pumped, closed, or failed systems, but commonly used by the Water Department in conjunction with constant flow connections from the San Diego County Water Authority's treated water aqueduct.

4.2 Locations of Pressure Control Stations

Pressure control stations are located within the public right-of-way and easements granted in perpetuity to the City of San Diego, but not in vehicular corridors or curbside parking areas. If at all possible, access hatches are located away from normal pedestrian paths (e.g., behind sidewalks). Any locations other than those described above must be by prior approval of the CIP Project Manager.

In evaluating the need or site for a pressure control station, extreme care must be taken to ensure that all hydraulic standards within each of the connected pressure zones is maintained at all times. This is especially important in the case of pressure regulating/reducing stations where the potential to deplete the hydraulic energy of the upstream area is particularly acute. In the specific case of a pressure relief station, particular care should be taken to ensure that the downstream area and pipeline grid can accommodate the variable influx of flow, usually highest during low demand periods.

Unless inhibited by physical or hydraulic barriers, or if operational improvements and annual cost savings can be identified, pressure regulated/reduced areas may not receive primary service from pumped areas. Emergency connections are the exception. However, such emergency connections must be analyzed to ensure that emergency flows do not overwhelm the capacity of the pumps nor the capacity of the pipeline grid supplying the emergency connection.

4.3 Configuration and Sizing Criteria

Pressure control stations must be designed to handle maximum, minimum and emergency (including fire) demands. The highest static pressure to be provided at any customer service anywhere within the system is 120 psi. Pressure relief valves to protect the water system should be set 15 psi above the normal maximum pressure at each mechanically operated source such as a pump station or pressure control station. The pressure class of the water main pipe at any elevation is dictated by this relief valve setting.

In pressure zones supplied by more than one pressure control station (without available storage), each station is sized so that any one of the pressure control stations can be totally removed from service without reducing the overall maximum supply capacity to the entire pressure zone.

In general, large pressure control valves (greater than 10 inches nominal size) may not be used to handle both maximum and minimum flows. Small pressure control valves, not less than 4 inches nominal size, are used to handle minimum flows.

All pressure regulating/reducing valves must be equipped with a check valve feature to protect against undesired backflow due to a failed pressure regulating/reducing valve in another part of the same pressure zone. Each pressure regulating station should include a bypass line of an equal or greater diameter than the supply line to the station and an adequate high-pressure relief valve to protect the regulated water system.

Pressure control stations must be equipped with one more than the number of pressure control valves required for the maximum design pressure. In general, this means that:

1. Larger capacity pressure control stations containing pressure control valves, 10 inches and larger, are designed for not less than three pressure control valves: one or more duty valves for the anticipated maximum flows, one backup valve equal in size to one of the duty valves, and one low-flow valve for the anticipated minimum flows.

2. Smaller capacity stations containing pressure control valves, 8 inches and smaller, are designed for not less than two pressure control valves: one duty valve for the anticipated maximum and minimum flows, and one backup valve equal in size to one of the duty valves.

Pressure control valves must be housed within a concrete vault, either precast or cast-in-place, with a minimum inside vertical clearance (floor to roof) of 5 feet. The valves must be elevated and supported by appropriate means (see Figure 4-1) with their center lines at least 2 feet above the finished floor elevation. All pressure control valves in the vault must have not less than 2 feet of clear distance between the valves.

In general, pressure control valves are aligned so that all associated piping passes perpendicularly through the walls of the vault. For large-pressure control stations, where thrust conditions from pressure and/or flow may dictate special design, the alignment of pressure control valves may be skewed (e.g., 45 degrees) to the walls of the vault. However, these special designs must be approved by the CIP Project Manager.

All connected water conveying equipment and appurtenances within the walls of the vault must be flanged except at the flexible coupling on one side of the pressure control valve, which must be restrained.

Each pressure regulating valve must be isolated by gate or butterfly valves on both sides.

4.4 Appurtenances

Pressure control stations must have a by-pass line of equal or greater size than the supply line to the station, with an in-line gate or butterfly valve that remains closed during normal operating conditions. Appropriate thrust restraint against the closed valve must apply.

Each pressure control valve must be isolated on either side by gate or butterfly valves. In general, the isolation valves are located outside the vault, buried with risers to the ground surface and valve covers per applicable standard drawing(s). Each control valve must have a pressure gauge upstream and downstream of the valves to assist operators in setting the control valves.

A sump measuring 1 foot square by 1 foot deep must be included in the floor of the concrete vault at any location. The sump must be accessible for portable pumping operations to collect and dispose of unwanted water.

Vault covers (access hatches) must be hinged and spring-assisted to accommodate “one person operation” must have hold open stay bars and safety railings when doors are in the open position, and must be designed to withstand H-20 traffic loadings. Any individual cover panel must not be longer than 8 feet in any direction.

Ladders in vaults must be equipped with retractable safety extension devices per OSHA requirements.

4.5 Materials

Pressure control valves, piping, isolation valves, and all other appurtenances associated with pressure control stations must conform to the City of San Diego’s Approved Materials List.

Concrete vaults must be designed to accepted engineering standards with a 28-day concrete compression strength of not less than 4,000 psi. Prefabricated vaults within these same design parameters are acceptable. In high ground water situations, the vault may not rely on restraint from protruding pipes or other appurtenances to mitigate buoyancy.

4.6 Instrumentation and Control

Critical pressure control stations must be equipped with telemetry equipment on both the high- and low-pressure sides of the pressure control valves in accordance with these Guidelines and at the direction of the CIP Project Manager. The DESIGN CONSULTANT must coordinate power supply details and phone modem, if applicable, with utility companies.

Suggested pressure settings for the pressure control valves must be noted on the construction drawings, with the additional notation: *“Subject to change based on actual field operating conditions*.”

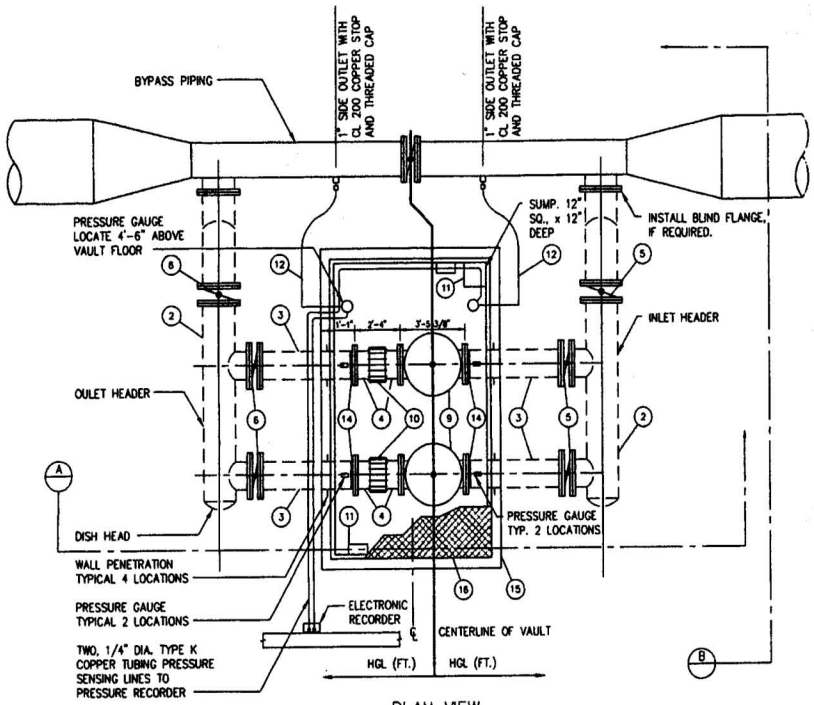

PLAN VIEW
N.T.S.

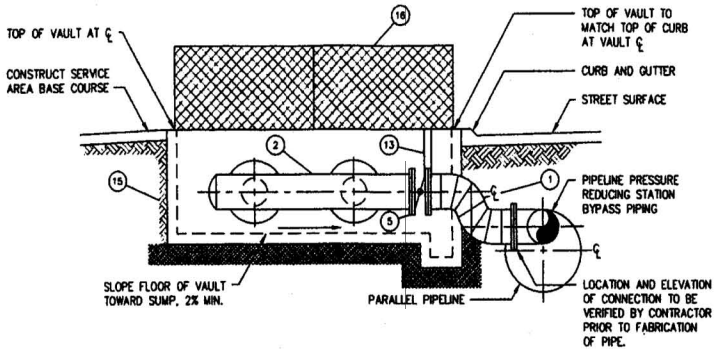

SECTION – B
N.T.S.

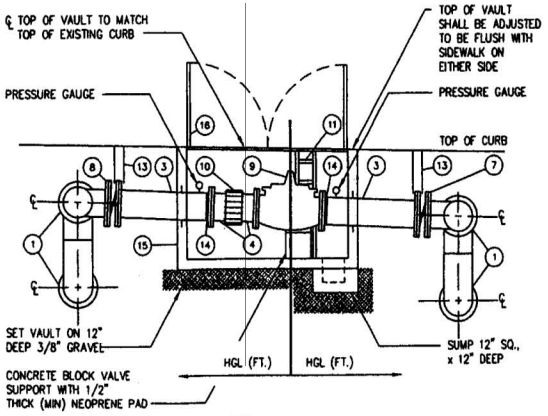

SECTION – A
N.T.S.

ITEM	QTY	DESCRIPTION
1	4	90 DEGREE ELBOW, 4 – PIECE, FLANGED BY PLAIN END.
2	–	PIPE HEADER WITH TWO 16" OUTLETS AND DISH HEAD END.
3	–	PIPE SPOOLS WITH SLIP ON/WELD ON FLANGE ON ONE SIDE.
4	–	PIPE SPOOLS, FLANGED BY PLAIN END.
5	3	BUTTERFLY OR GATE VALVE, FOR BURIED SERVICE.
6	3	BUTTERFLY OR GATE VALVE, FOR BURIED SERVICE.
9	2	PRESSURE RED./PRESSURE SUST. VALVE TO BE FURNISHED BY THE CITY OF SAN DIEGO AND INSTALLED BY THE CONTRACTOR.
10	2	PIPE DIA. FLEXIBLE COUPLING WITH TIE – ROD THRUST RESTRAINT.
11	2	GALVANIZED STEEL ACCESS LADDER, ALHAMBRA FOUNDRY MODEL A–3400, OR EQUAL, WITH GALVANIZED STEEL LADDER – UP SAFETY POST.
12	–	1" COPEER TUBING TYPE K SOFT FROM EXISTING 1" SIDE OUTLETS THROUGH VAULT WALL.
13	6	BURIED VALVE OPERATOR EXTENSION AND VALVE CAN. CONSTRUCT PER CITY STANDARDS DRAWING SDW – 107.
14	4	16" SLIP – ON/WELD – ON FLANGE.
15	1	PRECAST VAULT, RATED FOR H20 TRAFFIC LOADING. COAT OUTSIDE OF VAULT WITH CONCRETE CURING COMPOUNT. SEAL JOINTS WITH WATERPROOF MASTIC.
16	1	GALVANIZED STEEL CHECKERED PLATE, FULL OPENING, SPRING ASSISTED, HINGED COVER, RATED FOR H20 TRAFFIC LOAD. THE COVER SHALL BE SEGMENTED INTO FOUR PANELS AS INDICATED ON THE DRAWINGS.

PROVIDE A SINGLE, HINGED ACCESS, RECESSES LOCKING HASP CAPABLE OF SECURING ALL FOUR PANELS. FULL OPENING REQUIREMENT MAY BE MET WITH A REMOVABLE GALVANIZED STEEL CENTER SUPPORT BEAM.

09/14/98

TYPICAL PRESSURE CONTROL STATION FACILITY

FIGURE 4–1

Book 2

Facility Design Guidelines

Chapter 5
Storage Facilities

City of San Diego Water Department
Capital Improvements Program

Chapter 5
STORAGE FACILITIES

5.1 General

Potable water storage facilities provide for operational, emergency and fire storage. This chapter provides guidance for the design of storage facilities, including steel tanks, steel standpipes, and reinforced concrete storage facilities. This section also provides guidance for the design of projects that demolish or rehabilitate existing steel tanks and steel standpipes. A standpipe is defined as a storage facility where the height is greater than the diameter. The design of circular prestressed concrete tanks is not covered in this Chapter, however, the Water Department has this type of tank in their system and is considered acceptable for new tanks.

During the design process, and at the time of the Basis of Design Report (BODR) submittal, the DESIGN CONSULTANT submits a written verification to the CIP Project Manager that the design complies with these Guidelines and other criteria established by the Engineering Section of the Water Operations Division. This certification can be by a letter which includes a list of the criteria with a check beside each item to be incorporated in the design. A notation should be made in the margin indicating the specific design submittal when the DESIGN CONSULTANT expects this item to be incorporated into the Contract Documents. The DESIGN CONSULTANT also references and discusses any criteria in this listing to which it takes exception and does not recommend implementing. Design reviews by the City staff are in accordance with Chapter 6 of Book 1.

5.2 Project Presentation

As described below, the project presentation is intended to promote uniformity of the Contract Documents between the various Water CIP projects.

A predesign report is normally developed by the Water Department. Although the preliminary concepts for storage facilities is developed before the DESIGN CONSULTANT is authorized to start work, changes in the design are still required to incorporate site-specific constraints and considerations that become evident during detailed design. The concepts presented in this guideline also apply to revisions of the Predesign Report.

5.2.1 Basis of Design Report

A Basis of Design Report (BODR) for storage facilities is developed in accordance with requirements of Chapter 6 of Book 1.

5.2.2 Contract Specifications

The DESIGN CONSULTANT reviews Book 4, Standard and Guide Specifications, and changes, modifies, or edits the guide specifications to meet the specific requirements of the project. The DESIGN CONSULTANT also develops any additional sections not included in the guide specifications.

The DESIGN CONSULTANT includes in the special provisions of the construction Contract Documents a listing of all shop drawing submittals required from the construction Contractor.

The listing includes a reference to the specification section number and title where each item is described.

The special provisions of the construction Contract Documents require that the construction Contractor submit proposed equipment to the Construction Manager for approval of materials, fabrication, assembly, foundation, installation drawings, and operational information. Review and approval of submittals is normally conducted by the DESIGN CONSULTANT.

5.2.3 Contract Drawings

The DESIGN CONSULTANT develops contract drawings to meet the needs of each project. Preliminary drawings included in the BODR, when provided to the DESIGN CONSULTANT, may be used initially as the basis of the design and may be amended for incorporation into the Contract Documents. The contract drawings must conform to requirements of Book 5, CADD Standards.

5.2.4 Permits

The DESIGN CONSULTANT prepares all support information required to obtain permits for the project. Permits are covered in Chapter 10 of Book 1.

5.3 Codes and Standards

Codes and standards used in the design of storage facilities include selected codes and standards issued by the following organizations:

Abbreviation	Code or Standard Organization
ACI	American Concrete Institute
AISC	American Institute of Steel Construction
AISI	American Iron and Steel Institute
ANSI	American National Standards Institute
API	American Petroleum Institute
ASCE	American Society of Civil Engineers
ASME	American Society of Mechanical Engineers
ASTM	American Society for Testing and Materials
AWWA	American Water Works Association
FAA	Federal Aviation Administration
IEEE	Institute of Electrical and Electronics Engineers
ISA	Instrument Society of America
MSS	Manufacturers Standardization Society, Inc.
NEC	National Electric Code
NEMA	National Electrical Manufacturers Association
NFPA	National Fire Protection Association
PCA	Portland Cement Association
SEAC	Structural Engineers Association of California
UBC	Uniform Building Code
UL	Underwriters Laboratory, Inc.
UMC	Uniform Mechanical Code
UPC	Uniform Plumbing Code

In addition, other applicable codes and other requirements as adopted by local permitting agencies are observed for the design. The version of these reference documents effective at the time of receipt of the Notice to Proceed with the design phase is used for design purposes.

5.4 Steel Tanks and Standpipes

5.4.1 Site Design Guidelines

The DESIGN CONSULTANT reviews the Predesign Report provided by the Water Department, which includes a preliminary evaluation of constraints that may affect the site layout and design. The DESIGN CONSULTANT ensures that the designated site has sufficient area, is located at the proper elevation, and has adequate drainage.

The DESIGN CONSULTANT evaluates the following issues when situating the storage facility on the site:

- Access and parking
- Flood protection
- Grading and drainage
- Yard piping
- Land ownership and zoning
- Setbacks
- Landscaping and irrigation
- Overflow piping
- Subdrain system
- Site lighting
- Site utilities
- Geotechnical conditions
- Aesthetics
- Conveyance of overflow offsite
- Space provisions for future telecommunications tower(s) – (case-by-case basis)

Construction drawings for storage facility site improvements must include the following information:

- Project location map and vicinity map.

- Survey controls identifying the site by map number, lot number or other identifier linked to the most recent legal title document, and other control features including benchmarks. Survey control must be in accordance with the requirements in Chapter 13 of Book 1. In addition, two temporary benchmarks and two horizontal control points must be set near the site, and shown on the plane, at locations that cannot be disturbed during construction.

- Site plan, showing the proposed civil works at the site, the existing site topography, and the site boundary.

A. Access and Parking

Adequate right-of-way must be provided for vehicular access and turnaround, and for the supply pipeline and drain. A 10-foot minimum width strip area must be provided around the standpipe, on the turnaround area, and on the driveway to the street or the access area. Pavement design is based on a 4-inch plant mix pavement with a seal coat. Curbs and gutters are designed in accordance with the City of San Diego Standard Drawings G-1 through G-6.

Access roads at storage facilities must allow positioning a truck-mounted crane of the size required to remove the largest piece of equipment on the site. Sufficient space must also be provided to park two 3-ton maintenance trucks. The DESIGN CONSULTANT should avoid placing access roads and parking over piping penetrations through storage facility walls to avoid shear loadings.

B. Flood Protection

The floor elevation of buildings at the storage facility must be at least 2 feet above the 100-year flood elevation determined by the Federal Emergency Management Agency.

C. Grading and Drainage

The grading plan must be developed in accordance with the requirements of the latest edition of the UBC and the City of San Diego Grading Ordinance. Recommendations of the site geotechnical report are incorporated in the grading design. Where conflicts exist between the code and ordinance and the geotechnical report, the more stringent requirements must be adopted. Overall grading for the site is conservative and allows flexibility to allow future modifications or facility expansion at the site.

The site is graded with a slope downward from the tank or standpipe in all directions. The storage facility is positioned and the site developed to ensure a uniform soil bearing condition. The footing and floor are placed on either native earth material or structural fill, and the storage facility may not be situated with a portion on native material and a portion on fill. Over-excavation of the site may be required to provide placement of the storage facility on similar materials.

Drainage design must conform to the latest edition of the City of San Diego Drainage Design Manual. The manual identifies design criteria and methods for calculating drainage runoff and sizing underground piping, slotted drains, open channels, ditches, and appurtenances.

D. Yard Piping

Yard piping must be either steel or ductile iron pipe, as described in Chapter 3. Exposed piping at storage facilities must be steel or ductile iron pipe, as described in Chapter 6. Linings and coatings of piping must conform to the requirements in Chapter 7.

Water service to the site must be equipped with a reduced pressure backflow protection device installed after the water meter. The site water piping system should include a 3/4-inch diameter

water riser and hose bibb in a protected location as required for site washdown. Parking posts must be provided around the reduced pressure backflow prevention device.

Unless otherwise approved by the CIP Project Manager, mainline valves are of the same diameter as the pipeline.

E. Land Ownership and Zoning

Storage facility sites may not be located on easements, but should be entirely located on City-owned land. A zoning variance is generally required for storage facility sites.

F. Setbacks

Adequate setback from property lines must be provided to conform to local ordinances and codes. The distances between structures is determined by access requirements, piping requirements, and future expansion plans. Sufficient setback is also provided to allow for fill, cut, or fill transition to existing contour elevations at property lines.

G. Landscaping and Irrigation

Storage facility sites are landscaped in a manner to meet community standards and conform to the City's *Landscape Technical Manual*. The landscape design should extend the concepts established for the materials and form of the storage facility and blend with adjacent areas. Landscape designs must be developed by a Licensed Landscape Architect.

The landscape development of storage facility sites is kept to a minimum and should be low maintenance. Irrigation systems and plant material are installed outside the City's security fence unless it is absolutely necessary to screen objectionable views of a facility from the community or to prevent the erosion of manufactured slopes.

Landscaped areas must have automatically-activated irrigation systems with a reduced pressure backflow prevention assembly and water service meter at the connection to the water main. A framed, laminated control schematic drawing of the irrigation system must be mounted inside the cabinet door of the irrigation controller.

H. Security Fencing

Storage facility sites are normally completely enclosed by an 8-foot high perimeter security fence with a barbed wire top. The fence is chain-link or architectural wrought iron meeting community architecture requirements. The fence is webbed to reduce the station visibility as required by community architecture review. A 6-foot high masonry brick wall around the storage facility could also be provided, as appropriate, for architectural reasons. All accessible valves, vaults, water fixtures, and irrigation system fixtures are located inside the security fence. Specific fencing height and materials must be determined on a case-by-case basis. An intrusion alarm should be considered at the front gate as may be required by the Water Department CIP Project Manager. The security fence is placed, wherever possible, on or immediately adjacent to the property line.

I. Site Lighting

Storage facility site lighting is controlled by a photocell equipped with a manual on/off controller. Outdoor lighting is selected to reduce glare over the surrounding area and is vandal-resistant. The DESIGN CONSULTANT coordinates with the Federal Aviation Administration regarding the need for lighting the top of the tank.

J. Site Utilities

During the design process, coordination with representatives of local utility agencies is required as discussed in Chapter 11 of Book 1. The Predesign Report for the project presents available information on utilities which might be affected by construction of the project.

K. Geotechnical Conditions

The geotechnical consultant develops and implements a program of geotechnical testing to provide relevant design parameters for the storage facility. Geotechnical investigations for CIP projects are described in detail in Chapter 14 of Book 1.

L. Aesthetics

Views of the facility from areas surrounding the storage facility site are analyzed and alternatives evaluated to harmonize the appearance of the storage facility with its surroundings.

5.4.2 Structural Guidelines

A. Reference Standards and Codes

The latest editions of the following standards and codes apply to the design of steel tanks and standpipes:

- Building Code Requirements for Minimum Design Loads in Building and Other Structures, ASCE 7 by the American Society of Civil Engineers and ANSI A58.1 by the American National Standard Institute.
- Title 24, Part 2, California Building Code.
- Uniform Building Code (UBC) of the International Conference of Building Officials, as adopted by the City of San Diego Municipal Code.
- American Institute of Steel Construction, Specification of the Design, Fabrication, and Erection of Structural Steel for Buildings, AISC Publication No. S-326.
- American Institute of Steel Construction (AISC) Manual of Steel Construction, Allowable Stress Design (ASD).

- Specification for the Design of Cold Formed Steel Structural Members by American Iron and Steel Institute (AISI).
- Standard Specifications for Open Web, Longspan, and Deep Longspan Steel Joists and Joist Girders.
- API documented rules for the design and construction of large welded, low pressure storage tanks, API STD 620.
- The boiler and pressure vessel code (ASME).
- Standards for Welded Steel Tanks for Water Storage, ANSI/AWWA D100.
- Welded Steel Tank for Oil Storage, ANSI/API STD 650.
- Structural Welding Code – Steel, ANSI/AWS-D1.1.
- Specifications for Welding Sheet Steel instructions, ANSI/AWS D1.3.
- Building Code Requirements for Reinforced Concrete, ACI 318, and commentary ACI 318R, as contained in UBC and as adopted by the City of San Diego Municipal Code.
- Concrete Manual by the U.S. Bureau of Reclamation.
- Concrete Reinforcing Steel Institute (CRSI) Handbook.
- "Formulas for Stress and Strain" by Roark and Yong.
- Standard of the Occupational Safety and Health Administration (OSHA).
- AWWA Standard for Coating Steel Water Storage Tanks, ANSI/ AWWA D102 and NSF Standard 61.
- AWWA Standard for Automatically Controlled Impressed-Current Cathodic Protection for the Interior of Steel Water Tanks, ANSI/AWWA D104.
- Steel Tanks for Liquid Storage by American Iron and Steel Institute (AISI).
- Book 2, Chapter 8, Seismic Criteria (November 2002).

B. Design Loads

The following criteria define the minimum design loads to be used in the design of steel tanks and standpipes. Without limiting the applicability of other criteria, all design loads must conform to or exceed the requirements of the UBC and all applicable requirements of other documents referenced above.

1. *Dead Loads*

Dead loads, which are defined as the weight of all permanent construction, including equipment and piping, permanently connected to the tank, is determined using the following unit weights:

- Steel 490 pcf
- Concrete 150 pcf
- Aluminum 169 pcf

Dead loads include allowances for the following items:

- All equipment and piping permanently attached to and considered part of the structure, including future equipment and piping.
- Structural steel platform framing and floor plates (based on 20 psf).
- Heavy beams or girders, such as those required to carry loads other than platform live loads.
- Piping 12-inches in diameter and smaller is treated as a uniformly distributed load. A typical minimum value of 20 psf is used.
- Piping larger than 12-inches in diameter is treated as a concentrated load.

2. *Live Loads*

Live loads in addition to concentrated loads are determined as follows:

- Roof Loads: in accordance with ASCE 7/ANSI A58.1 UBC, ANSI/AWWA D100 or local code, whichever is more stringent.
- Stairs, Platforms, and Walkways*:* 100 psf or local code, whichever is more stringent.
- Minimum concentrated load on ladders and stairs: in accordance the requirements of ANSI-A58.1, OSHA, Cal-OSHA, or local codes, whichever is greatest.

3. *Wind Loads*

Wind loads must be in accordance with ASCE 7/ANSI A58.1, UBC, ANSI/AWWA D100 and ANSI/AWWA D103, on the basis of a minimum basic wind speed of 100 mph and appropriate exposure, or on the requirements of local code, whichever is more stringent. The design is governed by maximum wind or maximum seismic load, whichever is greater.

4. *Hydrostatic and Hydrodynamic Loads*

Hydrostatic loads are based on water when the tank is filled to overflowing. The unit weight of water is 62.4 pcf. Hydrodynamic loads are determined in accordance with the Seismic Loads described in this section.

5. *Lateral Soil Loads*

For all yielding structural components, lateral soil loads are determined by using active soil pressure conditions as recommended in the geotechnical report.

For all non-yielding structural components, lateral soil loads are determined by using passive soil pressure conditions as recommended in the geotechnical report.

A minimum surcharge pressure equal to an additional 2 feet of soil is used for all structures adjacent to traffic loading conditions.

Seismic soil loads are determined in accordance with the Seismic Loads described below.

6. *Seismic Loads*

Seismic loads are established in accordance with Chapter 8 (Seismic Criteria). The following criteria provide the basic guidelines for determining design ground accelerations and seismic forces:

- Seismic loads as described in Chapter 8, Seismic Criteria.
- Seismic soil loads are determined in accordance with the recommendation given in the geotechnical report.
- Response spectra with damping factors of 0.5%, 2.0% and 5.0% are used for the seismic design for the appropriate level of shaking and type of structure.
- Site-specific ground acceleration, response spectra, and design recommendations presented in the geotechnical report are used to determine seismic loads.
- Hydrodynamic loads are determined in accordance with the methods presented in Chapter 8, Seismic Criteria, paragraph 8.6, Water Retention Structures

7. *Miscellaneous Loads*

The following are considered in the design:

- Miscellaneous loads of a special nature, such as thrust from expansion joints, and special appurtenances.
- Surcharge loads, such as those due to adjacent structures and vehicular loads.
- Thermal loads, where applicable.
- Operating pressure forces and test forces and loads.

- Construction loads and conditions.

C. Loading Combinations

Loading is calculated for different conditions. As a minimum, the following loading conditions are determined:

- Full tank or standpipe: hydrostatic loading, plus hydrodynamic loading, plus seismic forces due to dead loads.

- Empty tank or standpipe: static soil pressure (active or passive) plus seismic soil pressure plus seismic forces due to dead load plus permanent surcharge.

D. Allowable Stresses

Allowable stresses must conform to the following:

- For steel plate and structural steel, allowable stresses are in accordance with the requirements of ANSI/AWWA D100.

- For tank concrete footings, allowable stresses are in accordance with the requirements of ACI 318.

- For wind and seismic loading conditions, allowable stresses may be increased by 33%.

- For wind and seismic design, allowable stresses have a factor of safety of 1.5 against overturning and sliding.

E. Roof Design

The roof must be a structural-steel-supported, steel-cone roof with a slope of 1-inch in 12-inch. The DESIGN CONSULTANT selects the roof type. If the appearance of the roof is of sufficient importance to justify the additional cost, an elliptical “water bearing” type of roof may be specified. If the roof is supported on a central column which requires lateral bracing, the design must include separate trolley tracks below each set of lateral braces.

The roof is designed for the loading and allowances in accordance with the requirements of paragraph 5.4.2 B, and the minimum live load is 20 psf.

The roof plate that is not in contact with water is at least 3/16-inch thick; the roof plate submerged in water during normal operations is ¼-inch minimum (knuckle or cone type). A corrosion allowance is not required for the roof plate. The roof plate construction must be in accordance with the standard practice of ANSI/AWWA D100, by continuous fillet weld at the top side only. Full penetration welds are used to join the roof knuckle together. The roof plate is not connected to the support members.

Roof supports are hot-rolled structural shapes with a minimum thickness of 3/16 inch. Shapes, bar, and plate submerged in water are at least ¼-inch thick. Lateral bracing of the roof rafter compression flanges is assumed to be provided by the roof plate.

Bolts, washers and nuts installed inside the storage facility are type 316 stainless steel.

Columns are fabricated from a sealed steel pipe welded at both ends. The column base is fabricated from steel plate and designed for a maximum allowable soil bearing in the geotechnical report. The column base is not welded to the bottom plate, but must be restrained from any lateral movement.

F. Wall Design

The wall design must be in accordance with ANSI/AWWA D100 and ANSI/AWWA D103 standards. Applicable loadings and allowable stress must be as described in paragraphs 5.4.2.B and 5.4.2.D, respectively.

All wall plate is rolled, regardless of material thickness.

The design fabrication and inspection requirements specified in ANSI/AWWA D100 and ANSI/AWWA D103 are considered, except that only steel that complies with ASTM A-36 or ASTM A131 material requirements is used. The lowest 1-day mean ambient temperature at the tank site is generally 45°F.

A corrosion allowance is specified for the tank if required. Minimum tank wall thickness must be in accordance with the requirements of ANSI/AWWA D100 and ANSI/AWWA D103.

The tank wall is designed for stability without the requirement for intermediate girders on the inside or outside surface of the wall.

Freeboard between maximum fluid level and the top half of the roof shell is provided to accommodate for the sloshing of fluid induced by seismic loading so as not to overstress the roof plate, roof members, and the connection.

G. Floor Design

Floor plates are lap welded continuously from the top of the plate with a minimum thickness of 5/16 inch. Sketch plates are 1/16 inch thicker than the rest of the floor plates. The floor plate is extended a minimum of 1 inch beyond the exterior of the wall. The joint between the wall and the bottom plate is continuously welded from inside and outside of the tank wall.

A corrosion allowance, if required, is added to the minimum requirements of the standards.

H. Anchor Bolts

Anchor bolts are designed to resist safely the uplift resulting from the overturning moment about the axis of the base of the tank or standpipe. See Chapter 8, paragraph 8.6.1(g) and 8.6.1(h) for additional guidance on anchor bolt design. Anchor bolt nuts are torqued after filling the storage facility and again before acceptance by the City.

I. Footings and Foundations

A ring wall footing is used. The top of the ring wall footing is approximately 6 inches above finished grade. The minimum depth of the ring wall footing below the bottom of the tank is not less than 2 feet.

The ring wall footing is reinforced to resist the lateral soil pressure of the confined earth. The width and height of the ring footing is sized for the loadings in paragraph 5.4.2.B and the allowable soil bearing pressure recommended in the geotechnical report. The minimum width is not less than 2.5 feet.

A compressive strength of 4,000 psi is used for the concrete, and 60,000 psi yield strength is required for reinforcing steel. Concrete cover for reinforcing bars must be in accordance with the requirements of ACI 318. The alternative design method is recommended for the design reinforcement.

5.4.3 Mechanical Design Guidelines

A. Storage Facility Hydraulics and Piping

The DESIGN CONSULTANT refers to the Predesign Report prepared by the Water CIP for available information on the storage facility piping configuration and capacity, storage facility size, high water elevation, and the adequacy of the overflow and drain pipes. Valves and piping are provided to meet special conditions at the site. Required anchors, supports and thrust blocks are provided as required to resist all loads and forces imposed by the conditions of service. Piping and valves are tested to 150 psi. The tank is electrically insulated from the attached pipeline by means of insulating couplings or sections of PVC pipe.

A concrete vault containing altitude valve(s) is provided adjacent to the tank. The vault should be similar in design to the regulator system with appurtenances shown in Chapter 4 of this Book 2. The vault must be adequate to carry an H-20 loading and have a stairway and sump. Altitude valves must be of the type listed in the Water Department's Approved Materials List. Two-way valves are acceptable on tanks of less than 2 million gallons. A bypass is to be provided around the altitude valve.

See Chapter 8 paragraph 8.6.1(j) for guidance on design of critical piping for earthquake loads.

1. *Inlet and Outlet*

Inlet and outlet piping is designed to maximize water circulation inside the tank. As a general rule, separate inlet and outlet pipes are required on all tanks larger than 2 million gallons. Both the inlet and outlet pipes penetrate the bottom plate and are separated as much as practical on opposite sides of the storage facility to promote circulation. Provision of a diffuser on the inlet is desirable to disperse inflow to the tank and encourage circulation. The pipe penetration opening through the bottom plate must be reinforced in accordance with the requirements of ANSI/AWWA D100.

For steel tanks, the inlet and outlet pipes penetrate the floor. For standpipes, the inlet and outlet pipes are on the side of the tank. At all wall penetrations, a piston and ball type flex coupling are provided on the exterior wall.

Reinforced concrete vaults are provided to house rubber-seated butterfly valves on inlet and outlet piping. Inlet and outlet valves may be equipped with battery-powered electric actuators for automatic isolation following an earthquake (see paragraph 5.4.4.D). Valve vaults must be designed for H-20 traffic loads and must be easily accessible for storage facility shutdown. A storage facility bypass pipeline is provided to accommodate shutdowns. In-line valves are the same diameter as inlet/outlet piping. Piping under the storage facility is encased in concrete. If valves are located away from the storage facility, there is a flexible coupling in the inlet and outlet lines with sufficient flexibility to accommodate differential settlement.

A restrained Dresser type coupling is provided on the vertical riser of the inlet pipe. The coupling is located above pavement grade. A 125-pound flanged overflow nozzle must be installed, with a 1-inch, extra heavy threaded coupling and plug in the bottom of the nozzle for testing. A 1-inch, extra heavy outlet coupling and corporation stop are also provided in the lower ring of the standpipe.

2. *Drain*

A drain pipe is installed at the bottom of the tank. The drain pipe is of adequate size and has sufficient slope to dispose of drainage water. The pipe is of a suitable type and pressure class to accommodate operation under pressure, if required. If the tank is unanchored, the location of the penetration in the bottom plate must conform with the requirements of Chapter 13 of the ANSI/AWWA D100. The drain line may be discharged to a drainage structure or facility common with the overflow pipe.

An eccentric plug valve is installed on the drain line. A vault adjacent to the ring wall footing is required for housing the drain valve. A hand railing is added around the inlet to the drain. The handrails are steel. The use of aluminum handrails is not permitted.

3. *Overflow*

The overflow pipe is sized to discharge the maximum fill rate of the tank. The overflow is located in an internal location. The overflow pipe should be braced against the tank wall. The DESIGN CONSULTANT designs the overflow system to ensure that water in the storage facility is protected from cross-contamination with surface water. The overflow pipe has an air gap separation, with flap gates and/or bug screening and low pressure flapper-type closure at overflow/drain piping outlet.

The overflow funnel is not less than 6 inches below the bottom of the shell vents. The overflow pipe flange clears the tank shell by 14 to 16 inches.

4. *Recirculation Piping and Pumps*

Where recommended in the Predesign Report or directed by the CIP Project Manager, recirculation piping and pumps is provided to afford additional circulation in the storage facility. Pumps and drives are suitable for outdoor installation, and are housed in a locked security cage. The pumping system is designed to recirculate the entire volume of the storage facility in less than 3 days. The recirculation piping draws water from the tank outlet and conveys water to the tank inlet. Where there is a common inlet/outlet line, recirculation is from the inlet/outlet line to 75% of the height of the tank.

5. *Wall Wash Down System*

A wall-mounted pipe is provided on the interior of the storage facility to facilitate washdown and cleaning of the tank.

6. *Sample Taps*

Sample taps are provided at various levels in storage facilities. A locked access to the sample taps is provided at the exterior base of the tank or standpipe.

A minimum of four 3/4-inch sampling taps are provided. Three of the taps must protrude a distance of 1 foot into the tank and be separated vertically to represent water quality from the bottom to the top of the tank. A fourth sample point is located near the bottom of the tank, flush with the inside face of the tank. An additional sample tap is provided in the recirculation piping if recirculation piping is used.

7. *Chlorine Injection Points*

Chlorine injection points are provided and equipped with locking covers. Injection points are located on the inlet pipe to the storage facility.

8. *Pump Connection*

A 6-inch diameter flanged pump connection is provided on the side of the tank. The connection is located 18 inches above the adjacent ground on aboveground tanks and on the pipe upstream of the altitude valve on buried tanks. A 6-inch flanged plug valve is provided on connections.

9. *Baffling*

The DESIGN CONSULTANT, as part of the Basis of Design Report, determines if internal baffling is recommended to improve circulation and water quality in the tank. On tanks greater than 10 million gallons, it may be necessary to computer model to identify improvements that optimize flow patterns, reduce short-circuiting, and minimize water age. The need for computer modeling is determined on a case-by-case basis.

B. Re-Chlorination

Water quality and level of chlorine residual maintained in the storage facilities are of concern. The need to provide re-chlorination of the water entering the reservoir is considered on a case-by-case basis. The DESIGN CONSULTANT verifies the need for re-chlorination facilities with the Water Department's CIP Project Manager, and in consultation with the Water Operations Manager.

At a minimum, the design includes chlorine analyzers, sampling ports and a flanged connection for future chlorine injection. The chlorine analyzer is to be housed in a NEMA 4X enclosure.

Hypochlorination using sodium hypochlorite is the preferred method for disinfection. Two hypochlorination options are available: (1) the use of commercial grade sodium hypochlorite, with a 14-day supply stored at the site, or (2) onsite generation of sodium hypochlorite.

If a disinfection facility is required, the disinfection and analyzer equipment is housed in a permanent structure along with sodium hypochlorite solution tanks. To determine the best combination of tanks, tank sizes are evaluated on the basis of proposed dosage rates. The tanks are made of fiber-reinforced plastic and provided with sight glasses.

The disinfection system maintains the chlorine residual within the range of 0.5 to 2 mg/l. Diluted sodium hypochlorite solution is injected into a wall washdown header. The hypochlorination system is sized to increase the chlorine residual in the storage facility by 0.2 mg/l over a 3-day period of continuous operation.

The sampling and monitoring system allows the return of sample water back to the storage facility to minimize water wastage. Appropriate pressure and flow for injecting sodium hypochlorite solution are achieved using metering pumps. The sodium hypochlorite feed rate is adjusted manually. Automatic adjustment from the analyzer is not allowed.

C. Access

A minimum of three access manways must be provided. Two 36-inch minimum diameter hinged-type manholes are provided at the bottom shell course. One 36-inch diameter access hatch is provided in the roof. The design of the manway and reinforcement around the openings must conform to the requirements of ANSI/API Standard 650.

A galvanized steel ladder is provided at the outside of the tank and should extend to the roof. Safety climbs are provided instead of safety cages at all ladders. Anti-climb provisions are also provided on all ladders.

A platform with galvanized steel grating and railing is provided and installed on the roof adjacent to the ladder. The roof manway and ladder are provided near the roof platform for access to the tank interior.

The revolving roof ladder is galvanized and designed to clear the roof manhole and all electrical conduit and cathodic protection equipment on the roof. Roller wheels are provided at the pivot end.

Ladders, safety climbs, platforms, and guardrails must meet Cal-OSHA General Industry Safety Orders and the following requirements:

- Provide interior catwalk at the spider rod level.
- Spacing between vertical members on ladder guard cage should be no greater than 15 inches center-to-center.
- Ladder rungs must have a minimum diameter of 3/4 inch.
- Distances between the first rungs of ladders and top steps is no more than 12 inches. Where there is no step, the first step is no more than 18 inches above grade.
- Rungs clear width is greater than or equal to 16 inches.

- Clearance on the climbing side of the ladder to the nearest obstruction is at least 36 inches.

- Clearance between back of ladder and the tank is over 7 inches.

- The dismount railing at the roof is 42 inches tall and 18 to 24 inches wide. A chain is provided between dismount railings.

- Rails are not less than 2 inches by 3/8 inch.

- Safety climb devices with a pivot dismount pole are provided on all exterior and interior ladders where required.

- Provide D-rings, hold-downs and other safety hook-up points on exterior and interior for attachment of safety cables and harnesses.

D. Vents

A vent is installed at the center of the tank roof. The vent is sized to prevent pressure buildup during the inlet and outlet operation at the maximum hydraulic rate. A type 316 stainless steel insect screen is provided in the vent.

A rotary ventilator is provided on the center of the roof. The ventilator is 3 feet in diameter, made of aluminum, and provided with cross braces and a type 316 stainless steel screen in a detachable frame.

Side ventilators with galvanized frames and type 316 stainless steel screens are placed in each top shell plate above the maximum water surface in the tank. Side ventilators should be provided with drip troughs to intercept condensed enamel fumes from the inside of the roof and prevent the same from running out of the vents and down the outside wall of the standpipe.

E. Tank Appurtenances

Appurtenances at steel tanks and standpipes include the following equipment:

- Inside and outside painters' trolley rails are constructed to set out from the tank shell for drainage. The trolleys should be constructed so that they can be operated on the inside or outside track.

- Spider rods are installed permanently by welding, above the painter's trolley track, and the rods are left in place upon completion of the tank.

- A davit crane and winch system are installed on access platforms over 25 feet in height. The davit crane and winch are rated for a minimum load of 1,000 pounds. The working platform and railing at the davit location provides for safe operation, with a minimum platform size of 6 feet by 5 feet. The railing around the platform is at least 42 inches tall with a lower kickplate of 4-inch minimum height above the platform and a 24-inch opening in the railing for access.

5.4.4 Instrumentation and Control Guidelines

Instrumentation and control systems at storage facilities consist of level monitoring, storage facility inlet and outlet valve position monitoring, a seismic isolation valve system, chlorine disinfectant and injection control system, recirculation systems, and intrusion alarm systems.

A. Telemetry/Control and Communications

Chapter 7 of Book 1 describes telemetry/control and communications requirements for supervisory control and data acquisition (SCADA) remote terminal units (RTUs). A programmable logic controller (PLC) interfaces between the site instruments and the radio transceiver and/or leased-line modem. The storage facility RTU is polled by the Central Control System, which is programmed in accordance with the storage facility control philosophy, as defined in the Contract Documents. This strategy should be originally defined in the Predesign Report and the detailed control strategies should be prepared by the DESIGN CONSULTANT in coordination with the Water Department's Telemetry, Power, and Control Group.

B. Level Monitoring

The below grade storage facilities level sensor is an ultrasonic level transmitter that produces a 4-20 mA signal proportional to the measured height of the water in the storage facility. The transducer is mounted on a 3-inch ANSI flange at the top of the storage facility and the transmitter control box is mounted 4.5 feet above finished ground. The control box integral digital level readout indicates the tank level in feet and inches.

High and low level switches are provided as a back-up to the level transmitter. The level switch is of the inductive type with cable-suspended electrodes held by an electrode holder mounted on a 3-inch ANSI flange at the top of the storage facility. The switches and the level transmitter are connected to the PLC. Dual cell storage facilities are provided with level instrumentation in each cell.

Above grade storage tanks and standpipes level transmitters are the pressure sensing type, connected to a vessel bottom flange by 1/2-inch diameter 316 SS tubing. The transmitter is provided with an integral digital display calibrated to feet of water level.

Above grade tanks and standpipes requiring local level indication are provided with a target and gauge board assembly. The vertical moving pointer is actuated by an internal float riding on two bottom-anchored guide cables. All components in contact with water must be type 316 stainless steel.

C. Inlet/Outlet Valves

Storage facility isolation butterfly valves are provided with valve position limit switches to report valve status to the Central Control System.

D. Seismic Isolation Valve System

There are three primary functions of a seismic isolation valve:

1) provide remote operator control to open / isolate a tank under normal or seismic conditions;

2) isolate a tank from the pressure zone, should the operator deem it suitable to withhold the water inventory in the tank from leaking out of broken distribution system pipes. The water in the tank can then be made available for fire fighting at some time after the earthquake has occurred, but before the pressure zone can be re-supplied with additional water; i.e. water treatment plants; and

3) isolate the tank from the distribution system to prevent rapid loss of water through broken pipes that could result in high life safety risk to nearby people.

Unless a credible life safety or other threatening situation occurs, it is not generally advisable for seismic isolation valves to automatically close and isolate all water from a pressure zone. This type of automatic closure could leave a pressure zone with no available source of water to fight fires immediately after an earthquake. This guideline could be relaxed if fire department and water department emergency coordination capability can be demonstrated to be reliable under post-earthquake conditions. In this case the isolated tank could be opened within, at most, 1 or 2 minutes, once it is deemed that the situation warrants the need for fire flow water from the isolated tanks.

For pressure zones which are served by two or more tanks, it is acceptable to isolate the tanks automatically (or remotely) under earthquake conditions, except for the largest tank. Assuming pipeline damage has occurred in that zone, the non-isolated tank can be expected to drain (go empty) within hours, depending on the nature and location of the pipeline damage and hydraulics of the zone, and assuming, also, no manual intervention (manually closing valves) has taken place in this time frame. If a fire ignites in that zone after the time the first tank goes empty, but before the zone can be re-supplied with additional water from water treatment plants, the isolated tank(s) can be opened to provide fire flows for that fire.

For tanks where it is deemed suitable to add seismic isolation valves, the valves should have the following attributes:

Remote Seismic Isolation Valves. Two sensors should be used to detect situations where operators (via SCADA) decide to close (or partially close) a valve. One signal should indicate that a large earthquake has occurred. This can be demonstrated by sensing that a suitably high and long duration level of shaking has occurred. This can be measured by ground acceleration, velocity or shaking-energy-type sensors. The settings to indicate that a large earthquake has occurred should be set such that high frequency short duration accelerations (truck vibration, shock loads) do not falsely indicate a large earthquake. The second signal should indicate a sudden loss of pressure or increase in flow of water leaving the tank. A programmable logic controller (PLC) can be developed to automatically determine if both conditions have occurred. If both conditions have occurred, then the remote operator can send a signal to the isolation valve to close completely or partially. The partial closure could be used to throttle back the water flows. There should be an alternate power supply to operate the instrument sensors, the SCADA system, and to actuate the isolation valve, which does not depend on electric or gas supply from San Diego Gas and Electric, under post-earthquake conditions. The power supply should be sized to provide 4 full valve cycles (i.e., two close and two open). Prominently placed

instructions should be located at the valve to allow manual over-ride of the seismic isolation valve.

Automatic Seismic Isolation Valves. Two sensors should be used to make the decision to automatically close a valve to isolate a tank. One signal should indicate that a large earthquake has occurred. This can be demonstrated by sensing that a suitably high and long duration level of shaking has occurred. This can be measured by ground acceleration, velocity or shaking-energy-type sensors. The settings to indicate that a large earthquake has occurred should be set such that high frequency short duration accelerations (truck vibration, shock loads) do not falsely indicate a large earthquake. The second signal should indicate a sudden loss of pressure or increase in flow of water leaving the tank. A programmable logic controller (PLC) can be developed to automatically determine if both conditions have occurred. If both conditions have occurred, then the PLC can send a signal to the isolation valve to close completely. There should be an alternate power supply to operate the instrument sensors and actuate the isolation valve, which does not depend on electric or gas supply from San Diego Gas and Electric, under post-earthquake conditions. The power supply should be sized to provide 4 full valve cycles (i.e., two close and two open). Prominently placed instructions should be located at the valve to allow manual over-ride of the seismic isolation valve.

A fire hydrant or similar type outlet should be placed between the tank and the seismic isolation valve to allow the fire department to draft directly from the tank under emergency conditions.

Design details for the seismic isolation valve may include the following:

The seismic detector, upon verification that a seismic event with a magnitude higher than its set point has occurred, closes the storage facility isolation valves by actuating the inlet and /or outlet isolation valve electric actuators. If the isolation valve is a single altitude valve, Cla-Valve or similar, the valve should be provided with a valve closing solenoid to be tripped by the seismic controller, in addition to the specified valve position limit switch.

The seismic detector is connected in a “voting” scheme, where the valve closure command is issued only when an additional signal – either high flow or low pipeline pressure – denotes that a pipeline failure has occurred. A strategic location is selected for a pressure transmitter and/or flow transmitter on the inlet or outlet pipeline to suit each storage facility design.

The seismic detector is provided with a back-up 24 vdc battery pack to sustain operation for at least 12 hours. The seismic detector control unit is installed in the RTU control panel with the PLC and telemetry equipment. Seismic sensors should be ideally mounted in a “free field” condition in a suitable enclosure; or may be mounted on a suitable high frequency structural wall or column. The seismic sensor(s) are connected to the control unit with manufacturer-furnished cables. Alarm contacts are provided and connected to the PLC. Through the PLC, the seismic detection system accepts the remote valve closure command from the Central Control System as well as “system disarm” and reset command.

The isolation valves electric motor actuators are 24 volts dc type, connected to a 24 vdc battery and charger with sufficient power to actuate the valves four times (two closures and two openings).

E. Site Intrusion Alarm

The storage facility site is provided with intrusion switches on hatches, maintenance access openings, entrance gates, and electrical panels. Intrusion switches are connected to the PLC which is programmed with an adjustable time delay upon entrance to allow the operator to disable the alarm before it is broadcast by the telemetry system. The disarm/reset controls are located in a convenient location for authorized personnel operation.

F. Chlorine Injection Instrumentation

Residual chlorine is monitored in a continuous sample stream by a Hach model CL17 colorimetric type chlorine analyzer and its output signal used to pace the chlorine injection pumps. The transmitter produces an isolated 4-20 mA output to the PLC proportional to chlorine residual. Field selectable ranges are between 0 and 5 mg/l. The PLC is programmed with a 3-mode proportional integral derivative controller to pace the chlorine injection pumps.

The liquid level in the sodium hypochlorite storage tanks is monitored by an ultrasonic level transmitter with local indication at the truck loading fill port and a 4-20 mA level signal to the PLC. Telemetry signals and alarms to the Central Control System include residual chlorine concentration, sodium hypochlorite tank level, pump, failure, sample flow low, and analyzer common alarm.

A liquid level indicator is required; and is a direct reading gauge with a type 316 stainless-steel float inside the tank and an indicator board mounted on the outside of tank.

5.4.5 Cathodic Protection Guidelines

Guidelines regarding cathodic protection systems are presented in Chapter 9 of Book 1, and materials selection and coatings guidelines are presented in Chapter 7 of Book 2.

5.4.6 Electrical Guidelines

A. Purpose

This section provides guidance in the design of electrical facilities for storage facilities, the conduct of special studies (including relay coordination, short circuit, voltage drop and motor starting analyses). The work may also entail collection of data such as soil resistivity and historical electrical loads.

B. Electrical Codes and Standards

Storage facility electrical system design must comply with the requirements of the City of San Diego Electrical Code, ANSI, NEC, UL, NEMA, and IEEE, as applicable.

C. Electrical Criteria

Electrical designs promote the commonality of hardware, the use of proven hardware, and the use of current technology. All electrical service cabinets and other free-standing equipment must have seismic braces to satisfy code requirements

The voltage drop at the motor terminals must not exceed 15%. Feeder and branch circuit conductors are sized so that their combined voltage drop does not exceed 5% with a maximum of 3% in either feeder or branch circuit.

Utilization voltage ratings are as follows:

- Motors smaller than 3/4 hp are 115 volts, single phase, 60 Hz.
- Motors 3/4 hp and larger are 440 volts, 3 phase, 60 Hz.
- Miscellaneous non-motor loads of 0.5 kW and less are rated at 115 volts.
- Non-motor loads larger than 0.5 kW are rated at 440 volts, 3 phase, unless this voltage rating is not available for the equipment selected.
- All ac control power circuits are 120 volts.
- All instrumentation power supplies are 120 volts ac.
- Special purpose dc control circuits may be 125 volts, 48 volts, or 24 volts. Motors must have the following features:
- Heavy duty, 100,000 hour rated bearings.
- Oil-lubricated motors are equipped with a visual oil level indicator.
- Locked rotor must comply with NEMA Code “F” or better.
- Motors for water pumps are hollow shaft type for ease of adjustment of impeller by means of adjusting a nut at the top of the impeller.
- Motors have winding over-temperature safety switch.
- Motors have strip-type heater elements that automatically disconnect.

D. Interfaces

At storage facilities with a pumping station, electrical facilities must also comply with the provisions outlined in Chapter 6 of this Book 2. The electrical design is coordinated with the cathodic protection system to avoid possible interference between the storage facility grounding system and the cathodic protection system.

E. Electrical Service and Distribution

Distribution (utilization) voltages at the storage facility site are 480 V, 208 V, and 120 V unless other voltages are required for special cases. Incoming service voltages must be coordinated with SDG&E.

The storage facility power distribution system is designed such that no single fault or loss of the preferred power source results in disruption (either extended or momentary) of electrical service

to more than one of the vital components. Vital and non-vital components serving the same function are divided as equally as possible between at least two MCCs or distribution panels.

The electrical power distribution system incorporates redundant power sources. The requirement for redundant supply is waived only in consultation with the CIP Project Manager. Incoming power metering has the capability for remote reading via a modem.

Outdoor installations have non walk-in, weatherproof enclosures.

F. Electrical Equipment

Electrical equipment is sized to continuously carry all electrical loads without overloading. Equipment and materials are rated to withstand and/or interrupt the available fault currents, with at least a 20% reserve margin for electrical load growth. Electrical power conductors are sized according to the heating characteristics of conductors under fault conditions.

1. *Distribution/Lighting Panels*

All panels have nonfusible disconnects in the main panel to open circuits during repair work. All breakers have “lockout” safety switches. 25% spare breakers are provided for future expansion.

2. *Motor Control Centers*

Motor control centers at storage facilities must conform to the requirements described in Chapter 6 of this Book 2.

3. *Switchgear*

Switchgear requirements must conform to the requirements described in Chapter 6 of this Book 2.

G. Grounding

All feeders have an equipment grounding conductor in the same raceway. Noncurrent carrying metal parts of equipment, all enclosures, and the raceway are grounded by an equipment ground conductor contained in the raceway, cable or run with the circuit conductors in the same raceway. Equipment grounding conductors must be sized according to NEC Table 250.

The grounding system in the storage facility area is coordinated with the cathodic protection system design to ensure that grounding does not hasten corrosion of pipe, tanks, and equipment.

H. Instrument Power

All 120 V power to instruments and instrument panels is derived from a dedicated instrument power panel from a shielded transformer. A general lighting and convenience receptacle panel may not be used to serve above loads. Instrument panels must be in a NEMA 3 or NEMA 4 enclosure.

An uninterruptible power supply (UPS) is provided for all main control panels, RTUs, RIOs, PLCs, and all other process controllers to provide continuous conditioned power. The UPS are sized to provide 30 minutes of standby power.

I. Emergency Power

Requirements for emergency power are generally described in Chapter 6 of this Book 2. Diesel engine units may be installed with special approval from the Water Operations Division. If required, an automatic transfer switch is provided.

J. Lighting

The California State Energy Conservation Standards apply where applicable. Voltage for lighting systems is as follows:

- Outdoors: High pressure sodium type, 277 or 115 volts, with a photoelectric cell and a timer in parallel and a manual override.

Illumination levels are as follows:

- Electrical equipment rooms: 40 footcandles
- Exterior lighting: 0.1 to 1 footcandle
- Mechanical equipment rooms: 30 footcandles

Lighting adjacent to stairs and ladders is switched. The pathway to the main lighting switch is lighted with nonswitched lighting fixtures.

All other outdoor lighting around storage facilities is controlled by photoelectric cells with a parallel timer and a manual bypass with key-operated switching.

Exterior lighting with 90-minute capacity emergency battery back-up packs are provided at the property entrance gate to unattended storage facilities.

K. Receptacles

The convenience GFCI receptacles throughout the outside of the facility must be 20-amp, NEMA 5-20-R, 120-volt grounding type located so that all working areas can be reached by a 50-foot extension cord. 480 V, 3-wire, 4-pole twist lock receptacles are provided so that the receptacles can be reached by a 50-foot-long cord. All outdoor receptacles in wet areas are in weatherproof enclosures installed in secured locations.

L. Additional Requirements

The Contract Documents include the requirements for:

- Provision for testing and written certification of ground fault testing.

- Spare parts and service for all major electrical equipment, including motors, emergency generators, electrical switchgear, and MCCs are available in Southern California in 24 hours of notification.

- If required by the Federal Aviation Administration (FAA), obstruction lights, wiring and conduit are provided.

5.4.7 Architectural and Landscaping Guidelines

Each storage facility structure should be evaluated based on its surroundings, designed to fit the local setting, and complement surrounding adjacent land use. The DESIGN CONSULTANT should consider the following:

- The design approach is flexible and creative, adapted to the unique conditions at each storage facility site. There is no single theme/style for storage facility structures.

- Construction material and plantings should be evaluated and selected according to requirements of function such as durability, aesthetics, maintenance, and cost-effectiveness.

- The design is well conceived and of lasting aesthetic value, putting public funds to good use.

- Color is in accordance with local community input.

5.4.8 Storage Facility Construction, Filling, Disinfection and Testing

A. Storage Facility Construction

In addition to the requirements of relevant AWWA specifications, all intersections of horizontal and vertical welds in the standpipe shell must be inspected by radiographic methods and provisions made to deliver the film to the Construction Manager upon completion of the work.

Sand for the cushion under the standpipe is thoroughly dry, where the use of dry sand is practicable. Under unusual conditions and when necessary, the sand may be pre-oiled, in which case the cushion must be rolled with a heavy roller and finished slightly higher than is required if dry sand is used, to take into account the compaction of the cushion under load, which might result in the standpipe floor being lower than the top of the foundation.

A clearance of 1/4 inch is provided between the outside edge of the floor plate and the side of the sand cushion depression in the foundation.

In testing the floor with hot oil, the oil should be injected very slowly to avoid displacing the sand and ensure complete coverage. This test is performed only in the presence of the City Inspector.

B. Filling, Disinfection and Testing

Before filling the standpipe for testing, the walls are thoroughly washed and the tank disinfected.

The overflow pipe is tested by filling it with water before filling the standpipe and before connecting to the drain line. Considerable time and large quantities of water have been lost due to leaks discovered in overflow pipes after standpipes are filled.

After the standpipe is filled, the plug on the bottom side of the overflow nozzle is removed to determine whether leaks have occurred in the overflow pipe since the original test was made.

Anchor bolt nuts shall be torqued after filling the standpipe and again before acceptance by the City.

Site piping and valves shall be pressure tested in accordance with the provisions of Chapters 3 and 6 of this Book 2.

5.5 Reinforced Concrete Storage Facilities

This guideline governs the design of buried and partially buried, cast-in-place, reinforced concrete storage facilities. The function of partially buried storage facilities is identical to that for buried concrete storage facilities. Partially buried concrete storage facilities have features similar to those for buried storage facilities, except that the structures are designed to be backfilled to a level below the roof elevation.

Storage facilities may consist of a single or dual basin configuration with hopper-shaped bottom(s). A dual basin design separated by a common wall is the most common storage facility configuration.

5.5.1 Site Design Guidelines

Site design guidelines for buried and partially buried reinforced concrete storage facilities are essentially identical to those for steel tanks as described in paragraph 5.4.1. Site grading prevents site drainage from gaining access to the top of buried storage facilities, and the earth blanket on the top of a buried storage facility provides a minimum of 1% grade from the roof ridge line to the perimeter of the storage facility.

The underdrain system provided consists of a grid of drain pipes beneath the floor of the storage facility and around its perimeter. The underdrain system reduces the uplift forces that occur when the storage facility is drained and detects excessive leakage from the storage facility. The underdrain system needs to be laid out in zones, no bigger than 20,000 ft^2 each, so a leak can be located in a specific area. Water collected in the drain piping system is discharged to an underground vault. An inspection manhole is provided at the vault for direct observations of leakage. Drain rock is provided beneath the storage facility and pea gravel is placed around the underdrain piping.

As part of the storage facility design, volume calculations are required to establish the volume of the storage facility at 0.1-foot increments between the high water level and the floor level at the sump. The reduction in volume attributed to the overflow device and the roof columns is included in the calculations.

5.5.2 Structural Guidelines

A. Reference Standards and Codes

The latest editions of the following standards and codes govern the design of buried and partially buried reinforced concrete storage facilities:

- Building Code Requirements for "Minimum Design Loads in Buildings and Other Structures," ASCE 7 by the American Society of Civil Engineers, and ANSI A58.1 by the American National Standards Institute.
- Title 24, Part 2, California Building Code.
- UBC of the International Conference of Building Officials, as adopted under the City of San Diego Municipal Code.
- Building Code Requirements for Reinforced Concrete, ACI 318, and commentary, ACI 318R, as contained in the UBC and as adopted under the City of San Diego Municipal Code.
- Environmental Engineering Concrete Structures, ACI 350R.
- "Concrete Manual," U.S. Bureau of Reclamation.
- Concrete Reinforcing Steel Institute (CRSI) Handbook.
- "Rectangular Concrete Tanks," Portland Cement Association (PCA).
- "Moments and Reactions for Rectangular Plates," Engineering Monograph No. 27, U.S. Department of the Interior Bureau of Reclamation.
- Structural Welding Code - Steel, ANSI/AWS-D1.1.
- Recommended Lateral Force Requirements and commentary (commonly known as "Blue Book"), Seismology Committee of the Structural Engineers Association of California (SEAOC).
- "Formulas for Stress and Strains," Roark and Young.
- Standards of the Occupational Safety and Health Administration.
- State of California Construction Safety Orders, Cal-OSHA.
- Book 2, Chapter 8, Seismic Criteria.

B. Design Loads

The following criteria define the minimum design loads for buried and partially buried concrete storage facilities. Without limiting the generality of the other requirements of these criteria, all design loads must conform to or exceed the requirements of the UBC and all applicable requirements of the documents referenced in A above.

1. *Dead Loads*

Dead loads for various construction materials are as follows:

- Steel: 490 pcf
- Concrete: 150 pcf
- Aluminum: 169 pcf

In addition to the dead load of the basic structural elements, the following items are included in the dead load:

- All equipment and piping permanently attached to and considered part of the structure, including future equipment and piping.

- Piping of 12-inch diameter and smaller is treated as uniformly distributed loads. A typical minimum value of 20 psf is used.

- Piping larger than 12 inches in diameter is treated as concentrated loads.

2. *Live Loads*

Live loads, in addition to concentrated loads, are determined as follows:

- Roofs that require vehicular access for maintenance require H-20 traffic loads.

- Roof Loads: in accordance with the ASCE 7/ANSI A58.1 UBC, or local code, whichever is more stringent.

- Stairs, Platforms, and Walkways: 100 psf or local code, whichever is more stringent.

- Minimum concentrated load on ladders and stairs: in accordance the requirements of ANSI-A58.1, OSHA, Cal-OSHA, or local codes, whichever is greatest.

- Mechanical and electrical equipment areas are designed for a minimum of 100 psf live load. Additional consideration is given for the type, size, and weight of specific equipment and the maintenance equipment in determining the actual design live load and concentrated loads.

3. *Wind Loads*

Wind loads must be in accordance with the ASCE 7/ANSI A58.1, and the UBC on the basis of a minimum basic wind speed of 100 mph and appropriate exposure, or on the requirements of local code, whichever is more stringent. The design is governed by maximum wind or maximum seismic load, whichever is greater.

4. *Hydrostatic and Hydrodynamic Loads*

Buried and partially buried storage facilities are considered environmental engineering structures and are designed for hydrostatic forces imposed by the fluid contained in them. The unit weight of water is 62.4 pcf. All environmental engineering structures are designed for hydrodynamic forces using ground acceleration and the response spectra identified in the project geotechnical report, and the requirements of paragraph 5.5.2.B.6.

5. *Lateral Loads*

Buried and partially-buried concrete storage facilities are designed for the following applicable pressures:

- For all yielding structural components, lateral soil loads are determined using active soil pressure conditions recommended in geotechnical report.
- For all nonyielding structural components, lateral soil loads are determined using passive soil pressure conditions recommended in the geotechnical report.
- A minimum surcharge pressure equal to an additional 2 feet of soil is used for all structures adjacent to traffic loading conditions.
- Hydrostatic pressure imposed by the contents of the storage facility is considered.
- Hydrostatic pressure imposed by groundwater conditions, in addition to lateral soil pressure, is considered in the design. Lateral pressure distribution is as recommended in the geotechnical report.
- Seismic soil pressure is in accordance with the requirements of paragraph 5.5.2.B.6.

6. *Seismic Loads*

Seismic loads shall be developed in accordance with Chapter 8 Seismic Criteria:

- When selecting ground motions for seismic design, consider requirements for uninterrupted operation after a major earthquake.
- Chapter 8 paragraph 8.5.1 provides requirements for seismic loading on underground structures.
- Chapter 8, paragraph 8.6 provides guidance for application of seismic loads for water retention structures, including hydrodynamic effects.
- Chapter 8, paragraph 8.6.3 provides guidance specific for design of water retention basins for earthquake loads.

- Chapter 8 paragraph 8.6.4 provides guidance specific for design of internal structures in water retention basins for earthquake loads.

7. *Impact and Vibration Loads*

For structures carrying live loads that include impact, the assumed live loads are increased in accordance with the Specification of the Design, Fabrication, and Erection of Structural Steel for Buildings, AISC Publication No. S-326. All forces produced by the equipment or machinery that vibrates are considered in the design of supporting structures, and information on the magnitude of these forces is obtained from the respective equipment suppliers. Impact forces due to operations, including surging fluid, are considered in the design.

8. *Miscellaneous Loads*

Miscellaneous loads of a special nature, such as thrust from expansion joints or loads at special appurtenances, are considered in the design. Other examples of miscellaneous loads include:

- Surcharge loads, such as loads due to adjacent structures and vehicular loads.
- Thermal loads, where applicable.
- Operating pressure forces, forces due to moving fluids, and test forces and loads.
- Construction loads and conditions.
- Equipment load caused by removal of valves, etc.

C. Loading Conditions

Structures are designed for various loading conditions. As a minimum, the following load combinations are determined:

- Tank Full Without Backfill: Dead load plus hydrostatic loading plus hydrodynamic loading plus seismic forces resulting from dead loads.
- Tank Empty: Dead load plus static soil pressure (at rest) plus seismic soil pressure plus seismic forces resulting from dead loads, including earth blanket on roof.
- Tank Full With Backfill: Hydrostatic loading plus static soil pressure plus dead load and live load plus hydrodynamic pressure plus seismic soil pressure plus seismic force due to dead load and soil cover.
- Equipment loads where truck or other equipment are loaded on roof for removing equipment.

D. Allowable Stress

Allowable stress for reinforced concrete structures must be in accordance with ACI 318/ACI 350R. Allowable stresses may be increased by 33% for seismic loading.

E. Structural Design Requirements

Reinforced concrete storage facilities are considered environmental engineering (hydraulic) structures and are designed for strength and serviceability. Designs are prepared using the strength design method or, as an alternative, the working stress design method. Designs must meet the following requirements:

- Structural designs of reinforced concrete environmental engineering structures and support facilities are in accordance with the general requirements of ACI 318 and ACI 350R.
- Design criteria are established within the limitations of the UBC and the ACI.

1. *Strength Design Method*

The following guidelines govern the strength design method (ACI 318):

- All concrete support facility structures not considered environmental engineering structures are designed by the strength design method.
- The strength design method is not recommended for the design of environmental engineering structures. If the strength design method is used, however, the load factors of ACI 318 are modified in accordance with ACI 350R. The load factor modifications are in accordance with Section 2.6.5 of ACI 350R.
- Serviceability requirements for support facilities and environmental engineering structures must be in accordance with the provisions of ACI 318 and Section 2.6.6 of ACI 350R.

2. *Working Stress Design Method*

If the working stress design method is adopted, the design must be in accordance with ACI 318, Appendix A, including the exceptions.

3. *Minimum Strengths*

Minimum strength for concrete and reinforcing steel is as follows:

- Concrete: 28-day compressive strength of 4,000 psi.
- Reinforcing steel: Yield strength of 60,000 psi per ASTM A615.

4. *Joints*

Expansion, contraction, and construction joints must be provided in accordance with ACI 350R to afford flexibility and accommodate differential movement, temperature stress, and shrinkage stress. All joints in environmental engineering structures where watertightness is required are provided with waterstops and sealant. All joint detailing, types, and locations must be in accordance with Section 2.8 of ACI 350R. The locations of all joints are shown on the construction drawings.

Expansion joints are provided at abrupt changes in the structural configuration. The maximum recommended spacing of expansion joints is 120 feet. If storage facilities remain empty for extended periods, a closer spacing should be used.

Contraction joints are used to dissipate shrinkage stresses, where required. Where used, the spacing of contraction joints is at intervals of less than 24 feet, unless additional reinforcement is provided in accordance with Figure 2.5 of ACI 350R. For environmental engineering structures in seismically active zones, partial contraction joints are used where 50% of the reinforcement passes through the joint.

Construction joints are positioned to cause the least impairment of the strength of the structure, to provide a logical separation between sections of the work, and to facilitate construction. All reinforcement is continued across or through the joint unless designed as a contraction or expansion joint.

F. Detailing

Detailing is performed in accordance with the seismic provisions of the following codes and references:

- UBC
- Provisions in Chapter 21 of ACI 318
- Provisions in ACI 350R

Detailing of different structural elements ensures that ductility and other requirements are in accordance with the requirements of the UBC and the SEAOC "Blue Book."

G. Watertightness and Cracking

To maintain watertightness of the structure, cracking and crack widths must be kept to a minimum. Cracking can be kept to a minimum by proper design, reinforcement distribution, and spacing of joints. The use of a large number of smaller diameter bars of main reinforcement is preferred over the use of an equal area of larger bars. Maximum bar spacing should not exceed 12 inches. Additional horizontal reinforcement placed in the bottom 3 feet of the wall reduces the tendency for vertical cracking.

H. Design Requirements for Major Elements

1. *Roof*

The following guidelines are used when designing below-grade or exposed reinforced concrete roof systems:

- Use a flat slab system with a suggested column spacing of 20 feet, center-to-center.
- Consider the effect of relative rigidity when the concrete storage facility roof is rigidly connected to the tank walls. The effect of daily temperature fluctuation on exposed concrete roof slabs is a consideration for partially-buried storage facilities.
- For large, exposed, storage facility roof structures where expansion joints are required, provide ductile moment resisting frames or the combination of sheer walls and ductile moment frames to resist seismic forces.

- Reinforcing required by structural design and reinforcing required to meet minimum code requirements run continuously through roof construction joints.

2. *Walls*

Walls are designed in accordance with the following:

- For a single-story closed storage facility, the wall acts as a vertical slab with continuity at both top and bottom. Moment distribution can be used to obtain the effects of continuity with the base and top slab. Reinforcing details at corners should be considered to handle the local effect of continuity around the corner.
- Walls should be designed for the loading conditions given in paragraph 5.5.2.C.
- The walls should be designed for passive pressure due to retained soil.
- Joints shall conform to paragraph 5.5.2.E.

Provide adequate freeboard between the maximum fluid level and the top of the wall to accommodate for the sloshing of fluid induced by an earthquake to prevent excessive stresses at the roof and connections with the roof.

3. *Foundations and Floor Slabs*

Unless groundwater or other geotechnical requirements dictate a mat foundation, the foundation should consist of a spread footing cast monolithically with the floor slabs. Design floor slabs as a membrane-reinforced concrete slab carrying all loads (i.e., concrete, water, superstructure, etc.) to the foundation. This floor slab is provided with construction (contraction) joints detailed and spaced to allow movement at these joints and to adequately tolerate differential settlement and shrinkage stresses. Joints must be in accordance with the recommendations of ACI 350R. The reinforcing is discontinuous at all floor slab joints, except for the first joint parallel to the exterior and center walls. All reinforcing is continuous across this first joint. All floor slab joints have a sealant groove and are provided with water stop.

Slab-on grade storage facility floors are designed and detailed as mat foundation carrying all loads except for the water, which is directly carried by soil to permit foundation and concrete volume change movements while carefully controlling crack widths. The bottom of the slab should be a reasonable level for ease in excavation, and the top surface should slope a minimum of 1% along a longer distance for cleaning and drainage. Column footings are placed monolithically and on top of the membrane slab to reduce stress concentration and to permit slab curling while controlling cracking. Give careful attention to corner detail to maintain continuity between walls and base slab.

5.5.3 Mechanical Design Guidelines

A. Inlet and Outlet

Inlet and outlet piping must be steel pipe, mortar-lined and -coated, conforming to the requirements of ANSI/AWWA C200 and C205. Yard piping must conform to the requirements described in Chapter 3 of this Book 2, and exposed piping must conform to the requirements described in Chapter 6 of this Book 2.

Design the inlet pipe to ensure water circulation inside the storage facility. Provide baffles if necessary. Valve vaults are provided for inlet and outlet control valves as described in paragraph 5.4.3.A.1.

Provide grating over the outlet pipe to protect piping from plugging due to a roof collapse.

Space reinforced concrete piers to support the pipe and to protect against uplift of the pipe due to buoyancy.

Place the outlet pipe in the outlet sump, located away from the inlet pipe, to accomplish maximum water circulation within the storage facility.

Place the outlet sump near the corner of the basin diagonally opposite the inlet valves to promote water circulation within the storage facility. The DESIGN CONSULTANT designs the outlet to be non-vortexing under maximum flow rate (pumps at full capacity) and with the water level at 5 feet above the top of the curb at the outlet sump. The slope from the toe of the 5:1 slope to the top of the outlet sump may vary from 1% to 0.5% depending on the size of the storage facility. The elevation of the finished floor at the sump is determined by the DESIGN CONSULTANT. A curb with mud gates is provided around the outlet sump. A stainless-steel handrail is placed around the perimeter of the outlet sump and a permanent stainless steel ladder is provided for access to the sump. The top of the sump is the lowest part of the storage facility floor. The sump is at least three column lines from the nearest wall.

A submerged emergency shut-off (sluice gate or butterfly valve) is provided in the outlet sump. In the event of an outlet pipe failure, the emergency shut-off provides a means for preventing the storage facility from draining completely, thus preventing structural damage to the storage facility.

B. Overflow System

A rectangular overflow weir structure cantilevered from the wall is provided. A steel pipe located at the invert connects the overflow to an appropriate point of discharge. The size of the overflow and the pipe is designed for the maximum fill rate. For dual basins, flow is through an opening in the dividing wall within the overflow structure. An air vent connected to the overflow pipe is provided to vent the trapped air in the pipe. The end of the pipe has a flap gate or insect screen.

The overflow pipe is designed to discharge to an energy dissipater at a maximum flow rate to be determined by the DESIGN CONSULTANT. The DESIGN CONSULTANT designs the energy dissipater to ensure that water within the storage facility is protected from cross-contamination with surface water.

C. Storage Facility Access

Access through the roof to the floor and the overflow structure is required. A concrete stairway, cantilevered from the wall, is the recommended access to the storage facility floor. A stainless-steel ladder is recommended for reaching the floor of the overflow structure. Aluminum hatches with locking devices are provided to limit unauthorized access. The hatches are designed for the anticipated live loads. Where applicable for vehicular access, use H-20 loading.

D. Roof Vent

A minimum of four vents is provided for each basin. Vents are sized for the maximum inflow or discharge rate to prevent pressure buildup inside the storage facility. A bumped head, with mesh screen, is located on top of the vent above the finished grade.

E. Sample Taps

Sample taps are provided at various levels in the storage facility. A locked access to the sample taps is provided at the exterior of the storage facility at ground level.

A minimum of four 6-inch diameter sample ports are provided that extend through the concrete wall of the storage facility. These sample ports are all at the same elevation at the bottom of the storage facility. Sampling taps (3/4-inch diameter) are located on each sample port. Three of the taps must protrude a distance of 1 foot into the storage facility and be separated vertically to represent water quality from the facility at different heights. The fourth tap draws samples from near the bottom of the tank and is flush with the inside face of the tank.

A fifth 3/4-inch sample tap is provided in the recirculation piping if recirculation piping is used.

F. Washdown System

A washdown piping system is mounted on the interior wall of the storage facility. The minimum design flow rate is 25 gpm per nozzle. It is assumed all nozzles are operating simultaneously per basin. Maximum size of nozzle is 1½ inches, unless otherwise approved. Minimum design pressure is 50 psi (static) at the hose connection.

G. Disinfection

Facilities are provided for rechlorination of water in concrete storage facilities as described in paragraph 5.4.3.B. Chlorine injection points are provided and equipped with locking covers.

H. Recirculation Piping and Pumps

Recirculation piping and pumps are provided as described for steel tanks and standpipes in paragraph 5.4.3.A.4.

I. Appurtenances

Davit crane and winch systems must conform to the requirements in paragraph 5.4.3.E.

5.5.4 Instrumentation and Control Guidelines

Instrumentation and control systems for buried and partially buried reinforced concrete storage facilities must conform to the requirements in paragraph 5.4.4.

5.5.5 Cathodic Protection Guidelines

Cathodic protection systems are presented in Chapter 9 of Book 1 and materials and coatings guidelines are presented in Chapter 7 of this Book 2.

5.5.6 Electrical Guidelines

Electrical systems for buried and partially buried reinforced concrete storage facilities must conform to the requirements in paragraph 5.4.6.

5.5.7 Architectural and Landscaping Guidelines

Architectural design for buried and partially buried reinforced concrete storage facilities must conform to the requirements in paragraph 5.4.7.

5.5.8 Storage Facility Construction, Filling, Disinfection, and Testing

Storage facility construction, filling, disinfection and testing must conform to applicable portions of paragraph 5.4.8.

5.6 Demolition of Existing Storage Facilities

Design for the demolition of an existing storage facility includes removal and disposal of the concrete or steel storage facility, concrete foundation, and aboveground appurtenances. Buried utilities are abandoned in-place unless otherwise directed by the Water CIP Project Manager.

Removal of the existing coating and recoating may require that the site be classified as a lead paint removal project, depending on the lead content of the original paints used. If the site is classified as a lead paint removal site, the DESIGN CONSULTANT incorporates the procedure developed by the City Asbestos and Lead Management Program (ALMP) for removal of lead-based paints from the exterior and interior surfaces of the standpipe. The ALMP manages and directs all aspects of lead-based paint removal from the facility. The DESIGN CONSULTANT also provides for the removal of asbestos or other hazardous material from the site.

Final features of the site are decided on a case-by-case basis. Improvements largely depend on the anticipated future use of the land such as a park or parking area, or the site may be prepared for sale of the property. The DESIGN CONSULTANT coordinates the final site features with the Water Department's CIP Project Manager.

5.7 Rehabilitation of Existing Storage Facilities

Rehabilitation of an existing storage facility is intended to include all the design features described in earlier sections of this Chapter 5, including:

Site Design Guidelines

Structural Guidelines

Mechanical Design Guidelines

Instrumentation and Control Guidelines

Cathodic Protection

Electrical Guidelines

Architectural Guidelines

Storage Facility Construction, filling, Disinfection and Testing

Site improvements may include repairs or improvements to existing pavement, fencing, lighting and security.

The DESIGN CONSULTANT performs a structural analysis that meets the intent of Chapter 8, Seismic Criteria. Paragraph 8.10 in Chapter 8 may be used for seismic evaluation and upgrade of existing structures.

The Water Department Corrosion Control Division performs a storage facility coating adhesion test and makes recommendation for further work. The DESIGN CONSULTANT incorporates the Corrosion Control Division's recommendations into the project.

Removal of the existing coating and recoating may require that the site be classified as a lead paint removal project, depending on the lead content of the original paints used. If the site is classified as a lead paint removal site, the DESIGN CONSULTANT incorporates the procedure developed by the City Asbestos and Lead Management Program (ALMP) for removal of lead-based paints from the exterior and interior surfaces of the standpipe. The ALMP manages and directs all aspects of lead-based paint removal from the facility. The DESIGN CONSULTANT also provides for the removal of asbestos or other hazardous material from the site.

All electrical conduit and appurtenances is upgraded to meet current code requirements, including the installation of weatherproof conduit, fittings, receptacles, and appurtenances, and the installation of ground fault circuit interrupters (GFCIs).

Improvements for each reservoir are approached on a case-by-case basis. The DESIGN CONSULTANT coordinates improvements with the Water Department's CIP Project Manager.

Book 2

Facility Design Guidelines

Chapter 6
Pumping Stations

City of San Diego Water Department
Capital Improvements Program

Chapter 6
PUMPING STATIONS

6.1 General

This chapter covers the design of raw water, treated water, and reclaimed water pumping stations, for the Water CIP. These facilities are referred to here as pumping station(s). Raw water pump stations provide for inlet screening and the problems associated with the existence of mussels as appropriate. The DESIGN CONSULTANT's pumping station design incorporates these operational and feature guideline requirements into the project Contract Documents.

Before the design of any pumping station begins, the CIP Project Manager contacts the Water Operations Division to schedule a design conference meeting to discuss and review the specific design and equipment requirements for the project. The DESIGN CONSULTANT participates in this conference. These conferences also determine which Special Pumping Station Requirements, if any, are required in the project design.

Special Pumping Station Requirements are optional and are not required for all pumping stations. Special Pumping Stations Requirements are typically for pumping station designs with high lift or high flow pumps, special environmental concerns, or other special design requirements as determined for the Water CIP.

At the time of the Basis of Design Report (BODR) submittal, the DESIGN CONSULTANT submits a written verification to the CIP Project Manager that the design complies with the required Water CIP Guidelines and agreed design conference criteria. This verification can be in the form of a cover letter attached to a list of these criteria with each item to be incorporated into the design of the pumping station checked off. A notation should be made in the margin indicating the specific design submittal when the DESIGN CONSULTANT expects this item to be incorporated into the design drawings and specifications. Note: This annotation assists reviewers of design submittals. The DESIGN CONSULTANT also references and discuss any criteria in this listing to which it takes exception and does not recommend implementing. Design reviews by the City staff are in accordance with Chapter 6 of Book 1, Design Development.

6.2 Project Document Presentation Guidelines

These Guidelines are intended to promote uniformity of report drawings and the Contract Documents between the various Water CIP projects during the design phase of implementation.

6.2.1 Basis of Design Report Drawings

The Predesign Report is normally developed by the Water CIP. The DESIGN CONSULTANT develops the BODR in accordance with requirements of Book 1, Chapter 6, Design Development. The format requirement for preliminary drawings used in the BODR may not be required to completely match that required for Contract Documents.

6.2.2 Contract Specifications

The DESIGN CONSULTANT reviews Book 4, Standard and Guide Specifications, and changes, modifies, or edits the guide specifications as necessary to meet the requirements of each project, and develops any additional sections not included in the guide specifications, as required.

Equipment specifications prepared by DESIGN CONSULTANT avoid sole source equipment requirements and ensure competitive pricing for major equipment to be supplied by the Construction Contractor, such as pumps, motors, and emergency power generation equipment.

DESIGN CONSULTANT includes in the CIP special provisions, a list of all shop drawing submittals required from the Construction Contractor for review and approval. This listing includes a reference to the specification section number and title where each item requiring review and approval is described.

The special provisions require that the Construction Contractor make submittals of proposed equipment to the Construction Manager for approval of materials, fabrication, assembly, foundation, installation drawings, and Operation and Maintenance Manuals. Review and approval is by the DESIGN CONSULTANT.

The Construction Manager routes shop drawing submittals to the Water Utilities Water Distribution Division Engineering Section for review of the following major equipment: pumps; motors; valves; emergency power generation system; electrical equipment and controls, prior to their return to the Construction Contractor.

6.2.3 Contract Drawings

The DESIGN CONSULTANT develops contract drawings to meet the needs of each project. Preliminary drawings included in the BODR, when provided to the DESIGN CONSULTANT, may be used initially as the basis of design and may be amended for incorporation into the Contract Documents. The contract drawings must conform to the requirements of the Book 5, CADD Standards. The DESIGN CONSULTANT reviews Book 3, Standard and Guide Details, and changes or modifies its guidelines as necessary to meet the requirements of each project, and develops any additional details not included in Book 3, as required.

6.3 Codes and Standards

Codes and standards to be used in the design of pumping stations include the following:

Abbreviation	Code or Standard
AASHTO	American Association of State Highway and Transportation Officials
ABMA	American Bearing Manufacturers Association
ACI	American Concrete Institute
AGMA	American Gear Manufacturers Association
ANSI	American National Standards Institute
ASHREA	American Society of Heating, Refrigeration and Air Conditioning Engineers
ASME	American Society of Mechanical Engineers
ASTM	American Society for Testing and Materials

AWWA	American Water Works Association
CalTrans	California Department of Transportation
FS	Federal Specifications
HYI	Hydraulic Institute Standards
IEEE	Institute of Electrical and Electronics Engineers
ISA	Instrument Society of America
MSS	Manufacturers Standardization Society, Inc.
NEC	National Electric Code
NEMA	National Electrical Manufacturers Association
NFPA	National Fire Protection Association
SMACNA	Sheet Metal and Air Conditioning Contractors National Association
SSPC	Steel Structures Painting Council
UBC	Uniform Building Code
UFC	Uniform Fire Code
UL	Underwriters Laboratory, Inc.
UMC	Uniform Mechanical Code
UPC	Uniform Plumbing Code

Specific structural design codes and standards to be used in structural design for pumping stations are included in paragraph 6.12.1 of this chapter.

The DESIGN CONSULTANT also observes all applicable codes and other requirements adopted by local permitting agencies. The current version of these documents effective at the time of receipt of Notice to Proceed with design phase is used as reference for design purposes. In case of conflict between the requirements of these reference documents and any code adopted by a local permitting agency, the code requirements prevail.

6.4 Pumping Station Hydraulics and Piping

6.4.1 Station Hydraulics

The DESIGN CONSULTANT refers to the Predesign Report provided by the Water CIP for information on system hydraulics, design capacity, system head curves, net positive suction head (NPSH), pump operating curves, piping configuration, transient surge analyses and control. The DESIGN CONSULTANT reviews this information and prepares hydraulic calculations for the BODR based on the following:

1. System head curves
2. Pump operating curves
3. Available NSPH
4. Piping configurations
5. Pump controls
6. Transient surge analyses

The BODR includes a figure showing both the system head curve and pump operating curves as described in paragraph 6.5.5 of this chapter. Where variable frequency drives (VFDs) are used, pump operating curves must also indicate pump operation at various speeds.

6.4.2 Piping Materials

All pumping station suction and discharge piping are ductile iron (DI) or engineered shop fabricated steel. Avoid the use of pipe threads on ductile iron pipe flanges. Where the use of threaded flanges is unavoidable, the thread must be assembled with epoxy and coated on the interior and exterior as described in Chapter 7 of Book 2.

Select piping systems which are appropriate for the type of fluid being conveyed. Prepare a piping schedule presenting materials, pressure rating, and test requirements.

For acceptable linings and coatings of pumping station piping, see subsection 6.18 of this chapter.

6.4.3 Flow Velocities

The DESIGN CONSULTANT sizes suction and discharge pipe so that the maximum suction velocity is 5 fps and the maximum discharge velocity is 8 fps. The minimum recommended discharge piping velocity is 3 fps.

6.4.4 Bolts and Fasteners for Piping

The DESIGN CONSULTANT specifies that all bolts and pipe fasteners for exposed ferrous piping are hot-dipped galvanized.

The DESIGN CONSULTANT specifies that all buried bolts and pipe fasteners are hot-dipped galvanized, except for buried flexible couplings or Dresser-type couplings, where they are type 316 stainless steel. All buried fasteners must be specified to be coated with polyamide cured epoxy and the coupling must be wrapped with petrolatum/wax tape.

6.4.5 Dissimilar Metal/Isolation Connections

Small piping, fitting, and appurtenances 2 inches and less in diameter connected to the pump suction and discharge piping must use PVC bushings and stainless steel pipe. Galvanized steel pipe is not acceptable.

Insulating PVC bushings and gaskets must be placed between connections of brass and ferrous piping and between any other pipes made of dissimilar metals.

The DESIGN CONSULTANT indicates any other isolation fittings required to isolate pumping station piping from sections of buried piping that are protected by a cathodic corrosion control system.

6.4.6 Fittings for Differential Settlement

Flexible Dresser-type couplings, mechanical joints, or other flexible type fittings with restraining devices are provided where both inlet and discharge piping connect to a pumping station or valve vault wall to allow for differential settlement. The fittings or couplings must have a fusion bonded epoxy coating on both the inside and outside surfaces.

6.4.7 Schedule of Pumping Station Piping Materials

The DESIGN CONSULTANT includes in Contract Documents a schedule of piping materials for all exposed and buried piping over 2 inches in diameter within the property limits of the pumping station. The schedule includes the following information:

Item No.	Diameter	Description	Units	Quantity	Remarks

6.5 Selection of Main Pumping Units

6.5.1 General

The DESIGN CONSULTANT refers to the Predesign Report provided by the Water CIP for information on the preliminary selection of vertical turbine or horizontal split case centrifugal pump configuration.

Pumping systems are normally controlled by a level control system (with a set discharge storage level using constant speed pumps) or a closed zone system (where a set pressure is maintained using variable frequency drives on pumping units).

6.5.2 Selecting the Type of Units

If the Predesign Report does not indicate which pump configuration should be used, the DESIGN CONSULTANT presents in the BODR a comparative evaluation of cost, operability, and constructability issues. This analysis includes general arrangement drawings and cost estimates for the pumping station with various configurations. Based on this analysis and the DESIGN CONSULTANT's recommendation on pump configuration, the CIP Project Manager directs the DESIGN CONSULTANT as to which configuration to use before proceeding with final design of the pumping station.

6.5.3 Horizontal Split Case Pumps

If horizontal split case pumps are selected for use at the pumping station, include the following features of pump construction:

1. Type: Horizontal split case.
2. Casing: Close grained cast iron tested to 150% of maximum head.
3. Impeller: Enclosed double suction, bronze, hand finished, statistically and dynamically balance and keyed to shaft.

4. Wearing Rings: Renewable, type 316 stainless steel.

5. Shaft: Type 316 stainless steel, machined and ground, designed for maximum deflection.

6. Shaft Sleeve: Type 316 stainless steel.

7. Bearing: Heavy-duty grease lubricated ball type, and double row thrust bearings. Minimum L-10 bearing life.

8. Seals: Mechanical with flushing water.

9. Shaft Coupling: Heavy-duty flexible with OSHA safety guard.

10. Base: Heavy cast-iron or steel base, with integral rim or pan and drain.

A typical pumping station general arrangement drawing for the horizontal pumping configurations is provided for the DESIGN CONSULTANT's consideration in Figure 6-1.

6.5.4 Vertical Turbine Pumps

If vertical turbine pumps are selected for use at the pump station, the DESIGN CONSULTANT includes the following features of pump construction:

1. Type: Vertical canned turbine.

2. Barrel or Can: Heavy-duty steel epoxy coated for mounting in concrete encasement, designed to support the unit without vibration at any operating speed. Barrel or can is provided by the pump manufacturer.

3. Bowls: Cast iron with amine cured epoxy coated water passages.

4. Impellers: Cast bronze, enclosed single plane type, balanced to operate within acceptable field of vibration limits.

5. Shaft: Line shaft, type 316 stainless steel.

6. Shaft Couplings: Type 304 stainless steel.

7. Wear Rings: Bronze.

8. Seals: Mechanical with flushing water.

9. Bearings: Heavy-duty, grease lubricated, bronze. Minimum L-10 bearing life.

The pump motor coupling must allow for adjustment of the pump impeller at the upper end of the motor.

The vertical turbine pump discharge head, sole plate, column and cans are to be provided by the pump manufacturer as a package.

A typical pumping station general arrangement drawing for the vertical turbine pumping configurations is provided for the DESIGN CONSULTANT'S consideration in Figure 6-2.

6.5.5 Pump Operating and System Head Curves

The DESIGN CONSULTANT prepares a combined system head curve and pump operating curve showing all pumps running, with both Hazen-Williams coefficients of 110 and 140 to determine friction loss. Curves represent both maximum and minimum pressures to be experienced by the pumping system. These curves are shown as a figure in the BODR and be repeated on the contract design drawings. When as-built drawings are prepared, the DESIGN CONSULTANT places the actual pump operating curves on the contract design drawings.

When selecting pumps, the DESIGN CONSULTANT considers the following items:

1. Select a pump operating curve where the required operating point is near the maximum efficiency point (optimally just to the right of this point) of the pump curve.

2. Select a pump operating curve where the operating point is near the minimum value of radial thrust.

3. Avoid pumps with "flat" pump operating curves where a small change in total dynamic head (TDH) results in a large change in pump flow.

4. Specify a pump/impeller located near the center of the pump operating curve recommended operating range. To facilitate modifying the pump with a different impeller to change pumping performance. This modification may be required based on information determined during station startup operational testing when the pump is discharging into the system.

5. In specifying the pump operating point, specify an operating flow at the required head that is 105% of the design requirement to allow for loss of operating capacity from pump wear and increased pipe friction.

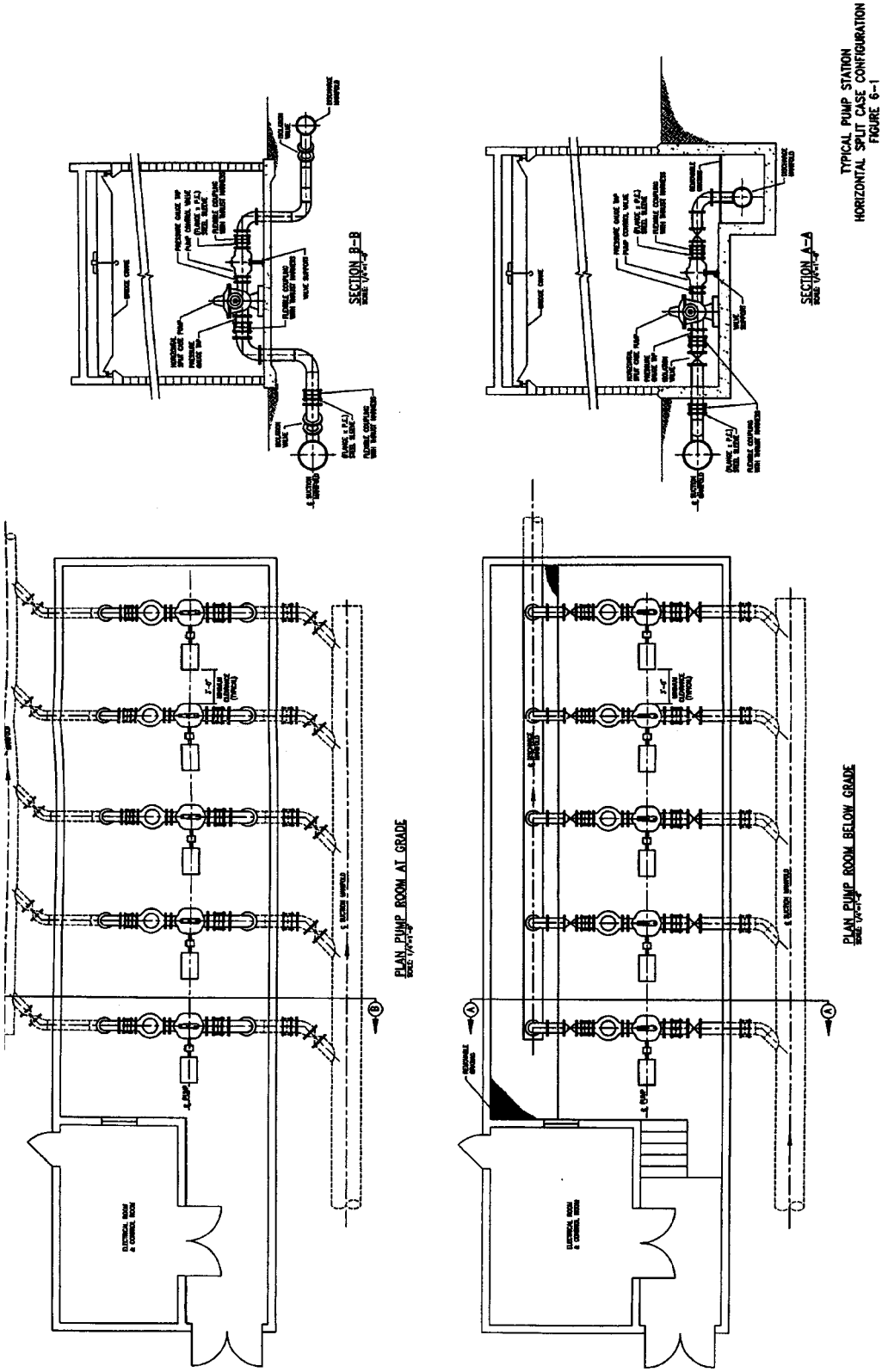

TYPICAL PUMP STATION
HORIZONTAL SPLIT CASE CONFIGURATION
FIGURE 6-1

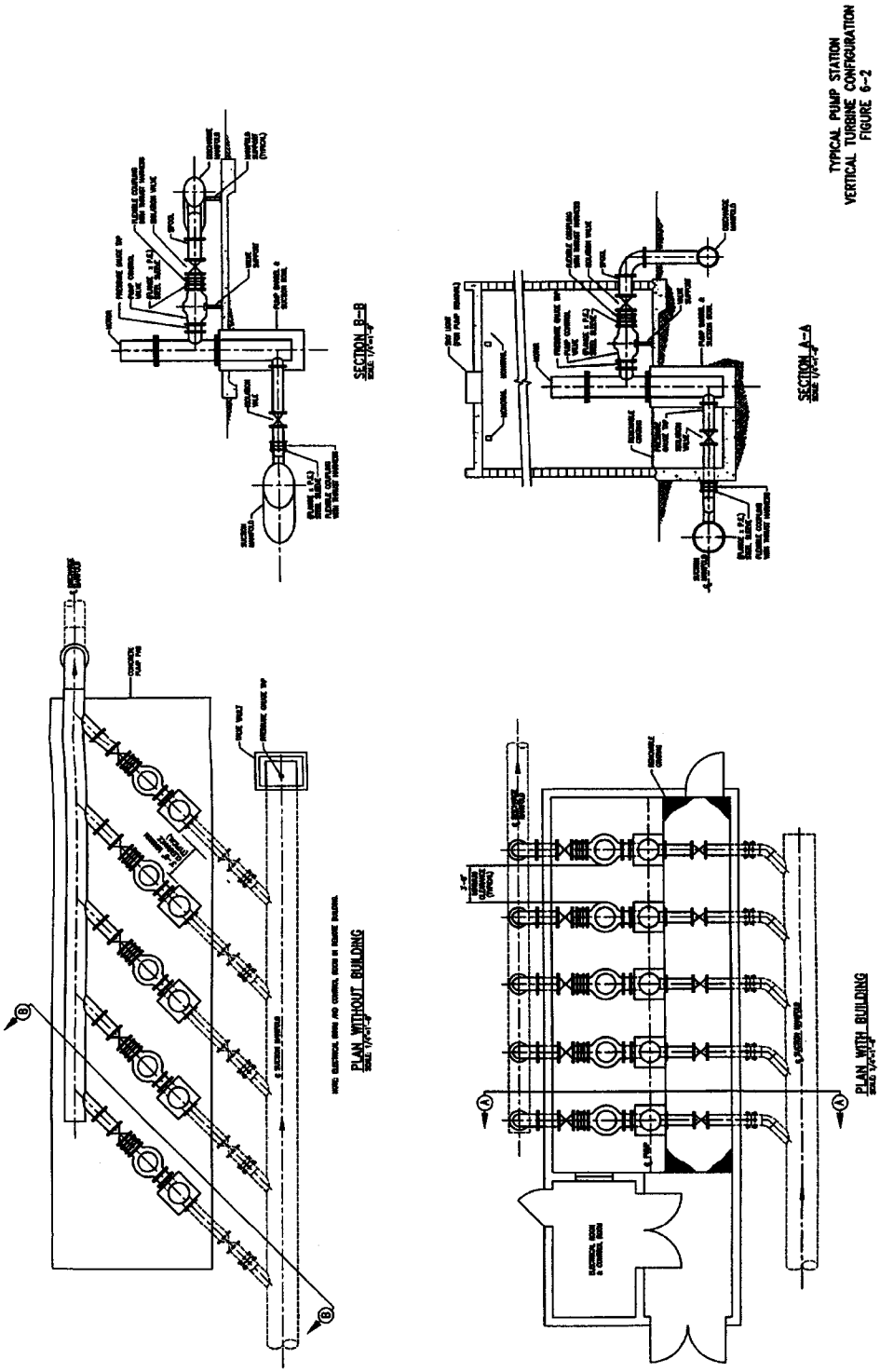

TYPICAL PUMP STATION
VERTICAL TURBINE CONFIGURATION
FIGURE 6-2

6.5.6 Vibration and Cavitation

To minimize vibration and resonance, the mounting pedestal, floor or inertia block must be of sufficient mass, typically 3 times greater than the mass of the pumps. The DESIGN CONSULTANT must require level installation of the pump base and anchor bolts, and dynamically balanced pumps to prevent vibration. Vibration amplitude must be less than limits set by the Hydraulic Institute standards. The DESIGN CONSULTANT selects suction and discharge piping to prevent cavitation or excessive vibration. The DESIGN CONSULTANT also selects a pump that operates within a stable operating range on pump operating curves to prevent cavitation.

6.5.7 Net Positive Suction Head (NPSH)

The net positive suction head available (NPSHA) is calculated for all pumps pursuant to standard engineering practices, less a 2-foot factor of safety. The NPSHA should always be more than the net positive suction head required (NPSHR) for the selected pump at maximum speed conditions.

6.5.8 Pump Motors

DESIGN CONSULTANT requires pump motors with the following characteristics:

- Minimum efficiency of 93% at the specified operating point.
- Maximum rotational speed of 1800 rpm.
- Rated for 10 starts per hour.
- Nameplate horsepower that exceeds the maximum required by the pump under all operating conditions. For best efficiency, the motors specified should operate in a range within 90% to 100% of its rated power (avoid oversizing motors since efficiency and power factor drop in motors running below load rating).
- Provide a 1.15 service factor at ambient temperature plus 50□C of the nameplate voltage.
- The temperature rise rating may not exceed class “B” temperature limits as measured by the resistance method when the motor is operational at full load of 1.15 service factor continuous in a maximum ambient temperature of 40□C.
- Provide an Underwriter’s Laboratory (UL) or Factory Mutual (FM) rating.
- Provide totally enclosed fan cooled squirrel cage induction type.
- Provide vertical turbine pump motors that have a hollow shaft for ease of adjustment. The Construction Contractor is required to submit a detail showing how adjustment of the pump impeller using upper end of motor is accomplished.
- The frame is cast iron.

- Windings are copper. Aluminum windings are not acceptable.
- Insulation is class “F” with epoxy coating.
- Provide heavy-duty 100,000 hour rated bearings. If bearings are oil lubricated, provide a visual oil level indicator.
- The starting code letter/locked rotor kVA shall comply with NEMA code “F” criteria or better.
- Provide an overtemperature safety switch installed in the motor windings.
- Provide a heater element installed to reduce condensation. The motor heater element is strip type that automatically disconnects when the motor starts.
- Equip with antireverse rotation ratchet. Also install a lockout limit to prevent motor start if the pump control valve is not closed.

6.5.9 Variable Frequency Drives

Unless otherwise indicated in the Predesign Report, variable frequency drives (VFDs) are normally used on pumping units to maintain pressure on closed zone systems.

Normally when multiple pumping units are provided, the system is provided with two VFDs and the rest of the pumps have constant speed motors.

For each VFD unit, provide a manual bypass connection to allow manual across the line motor start operation (i.e., full voltage start and constant speed motor operation).

6.5.10 Hydropneumatic Tank/Surge Tank (Special Station Requirements)

The DESIGN CONSULTANT may consider use of a hydropneumatic tank (which provides storage for low demand periods and/or surge protection) or a surge protection tank as required in the design.

If a hydropneumatic tank or surge protection tank is used, it must include all controls and appurtenances supplied by a single vendor as unit responsibility.

A hydropneumatic tank is typically controlled as follows:

- Stage first call pump on by pump on pressure transducer or pressure switch (i.e., provide tank differential pressure transmitter to indicate tank level).
- Pump off by pump off level probe (near center of tank) or in stilling well.
- Add/vent air pressure by solenoid valves as required after each pump call cycle to obtain desired set point pressure in the tank at the pump off level.
- Low/high level probe alarms and low/high pressure switch alarms.

Alarm conditions must be telemetry alarm points. These alarm conditions also start/stop pumps and add/vent air as required to reestablish the required tank level and pressure conditions.

If used as a surge protection tank, controls include similar level probes, add/vent air pressure solenoids, and pressure switches to continuously maintain the water level near the center of the tank.

6.5.11 Pump Base Plate Installation

Provide a detail on the drawings showing how the pump base plate is bolted to the top of the suction can for vertical turbine pumps and to the concrete equipment base for horizontal pumps.

Provide type 316 stainless steel anchor bolts, nuts and washers for securing the pump base.

6.5.12 Spare Parts and Manuals to be Supplied

The DESIGN CONSULTANT indicates that the Construction Contractor provide the following spare parts for each size of pump installed:

- impeller
- wear ring set
- bearing set
- couplings
- mechanical seal
- set of gaskets and O-rings
- complete set of dowels
- keys and pins for fastening all parts
- complete set of any special tools required for dismantling the pump

The Construction Contractor supplies a manual for the operation, maintenance, and repair of the pump as published by the manufacturer for each size of pump installed .

6.6 Pumping Equipment Layout

The DESIGN CONSULTANT refers to the Predesign Report for any requirements for pump arrangement and/or pump spacing at the pumping station. Should the Predesign Report have no requirements, the DESIGN CONSULTANT refers to Figures 6-1 and 6-2 of this chapter. Figure 6-2 provides a typical pumping equipment layout for pumping stations with vertical turbine pumps. Figure 6-1 provides a typical pumping equipment layout for pumping stations with horizontal split case pumps.

In general, the pumping equipment layout provides convenient access for operation and maintenance personnel, equipment installation, adjustment of component parts, maintenance and equipment removal utilizing conventional general purpose tools. Equipment is arranged to provide minimum clearances on at least 3 sides. Clearances are actual to most exterior dimension, not nominal.

The DESIGN CONSULTANT allows a minimum 3-foot clearance between pump piping and appurtenances and away from all pumping station walls, stairways, ladders, etc. Placing conduit, piping panels, etc. in any designated clear spaces is prohibited. Vertical floor to overhead obstructions must be a minimum of 7 feet -6 inches. Where equipment manufacturers

recommend a minimum clearance for maintenance, the DESIGN CONSULTANT provides an additional 1 foot.

For pumping stations with an electrical room and pump room in the same building, the electrical room is elevated at least 4 inches to provide positive drainage in the event of a pipe failure. The room has a window in the wall between the pump room and the electrical room for safety and to view pump operation.

Any changes the DESIGN CONSULTANT considers appropriate to the above pump arrangement or pump spacing are referred to the CIP Project Manager. The DESIGN CONSULTANT presents the agreed upon layout in the BODR.

6.7 Pump Inlet Configuration and Piping Layout

6.7.1 Pump Inlet Configuration for Vertical Turbine Pumps

If the vertical turbine pump configuration is used for the pumping station, the DESIGN CONSULTANT may use Figure 6-2 as a guide in configuring the inlet manifold and suction piping to each pump. Figure 6-2 illustrates acceptable inlet configurations for a pumping station system located inside a building and one located outside on slab. The DESIGN CONSULTANT may suggest deviations to the piping configurations shown in Figure 6-2 to the CIP Project Manager before issuing the BODR.

6.7.2 Pump Inlet Configuration Horizontal Pumps

If the horizontal split case pump configuration is used for the pumping station, the DESIGN CONSULTANT may use Figure 6-1 as a guide in configuring the inlet manifold and suction piping to each pump. Figure 6-1 illustrates acceptable inlet configurations for a pumping system located in a pump room below grade and in a pump room located at grade. The DESIGN CONSULTANT may suggest deviation to the piping configuration shown in Figure 6-1 to the CIP Project Manager before issuing the BODR.

6.7.3 Pump Discharge Header Configuration Vertical Turbine Pumps

If the vertical turbine pump configuration is used for the pumping station, the DESIGN CONSULTANT may use Figure 6-2 as a guide in configuring the discharge manifold and discharge piping from each pump. Figure 6-2 illustrates acceptable discharge configurations for a pumping station system located inside a building and one located outside on a slab. The DESIGN CONSULTANT may suggest deviations to the piping configurations shown in Figure 6-2 to the CIP Project Manager before issuing the BODR.

6.7.4 Pump Discharge Header Configuration Horizontal Pumps

If the horizontal split case pump configuration is used for the pumping station, the DESIGN CONSULTANT may use Figure 6-1 as a guide in configuring the discharge manifold and discharge piping from each pump. Figure 6-1 illustrates acceptable discharge configurations for a discharge manifold located in trench and one buried outside the pumping station. The DESIGN CONSULTANT may suggest deviations to the piping configuration shown in Figure 6-1 to the CIP Project Manager before issuing the BODR.

6.7.5 Relief/Bypass Line to Suction (Special Station Requirement)

Install a bypass line with a pressure relief valve to relieve the discharge manifold to the suction manifold in a pump operation overpressure condition. This line must have a vacuum relief valve after the pressure relief valve. This line can also be used to recirculate fire pump test flows when appropriate. DESIGN CONSULTANT provides for installation of the pressure relief valves and a flow meter on this line in a valve vault or aboveground to determine the amount of water being recirculated. The relief valve has a valve position limit switch to alarm in the PLC when the valve opens.

6.7.6 Bypass Line to Discharge (Special Station Requirement)

As a special station requirement, the DESIGN CONSULTANT may include a bypass from the suction supply manifold to the discharge manifold through a hydraulic check valve to protect against suction surge pressures or to supply low pressure flow in a pumping station failure. The bypass line is the same size as the suction line to the pumping station. DESIGN CONSULTANT provides for installation of a pressure gauge and air/vacuum valve on the bypass line located in a valve vault or aboveground.

6.7.7 Discharge Piping Assembly

DESIGN CONSULTANT designs exposed pumping station discharge piping using spool sections, tie-rod restrained coupling adapters, or restrained Dresser-type couplings (not with studs). Discharge piping is fitted and connected so that no lengths of pipe are too long to remove from the pumping station building using the hoist equipment provided. Provide unions for the removal of all small piping appurtenances.

6.7.8 Pipe Restraints

The DESIGN CONSULTANT indicates thrust “kick” braces at 90□ elbows and all other bracing required to resist seismic forces, operational pressure and surge pressures on exposed piping installations. Indicate locations of thrust blocks and restrained joints in the contract drawings.

The DESIGN CONSULTANT designs all piping joints and thrust restraints to withstand maximum anticipated surge pressure. Base elbow fittings are not designed to carry any side thrust loading. Indicate wall pipes with intermediate flanges for thrust restraint where piping enters valve vaults or underground pumping station walls.

6.7.9 Couplings

The selection of pipe joints or couplings and the care with which they are installed are important considerations for the DESIGN CONSULTANT. Sleeve couplings, mechanical joint couplings, rubber-gasketed push-on joint couplings, field-weld joints, grooved and shouldered couplings, butt straps, and flanges are commonly used with steel water pipe. Screwed joints are used on small steel, cast-iron, bronze, stainless, etc. The DESIGN CONSULTANT may consider patented joints if the application fits the recommended use and design data from the joint manufacturer.

A. Restrained Couplings

Flanged adapters, sleeve-type compression couplings or grooved-end couplings should be provided with a suitable harness for longitudinal restraint. For bolted flanges, the DESIGN CONSULTANT ensures that flanges of different materials and pressure classes are compatible.

B. Flexible Couplings

On exposed piping inside the pumping station, the DESIGN CONSULTANT avoids rigid connections in flanged piping between the pump and fixed discharge manifold piping. Flexible couplings provide ease of assembly/disassembly of piping, minor adjustment in assembled piping, pump vibration isolation and strain relief at flanged fittings.

6.7.10 Pressure Gauges

Provide a compound pressure gauge (combination vacuum and pressure) on the suction piping and a pressure gauge on the discharge pipe of each pump installed. Typical locations for these gauges are shown in Figures 6-1 and 6-2. Gauge assemblies are mounted off the piping on a separate stand to isolate the gauges from pump vibration with the following fittings connecting to the pumping station piping:

- Stainless steel nipple
- Corporation stop
- Flexible hose off the piping to the gauge mount location
- Isolation ball valve
- Air release cock
- Diaphragm seal/pulsation dampener (to prevent corrosion and pressure surges on the gauge(s), fill the diaphragm seal and gauge with glycerin and provide a fitting for refilling)
- Stainless steel gauge snubber

Gauges must have a built-in safety plug for blowout protection in an overpressure condition. Pressure transducers have a 4 to 20 mA signal output for transmitting pressure information to the pump controls and to a pressure display panel, in accordance with subsection 6.15 of this chapter.

6.8 Expandability

If the Predesign Report indicates that a pumping station is planned to be expanded in the future, the DESIGN CONSULTANT ensures that adequate space is provided to accommodate the installation of future equipment. The suction and discharge piping manifold is sized and arranged to accommodate future flows without having to take the pumping station out of service when expansion is required. If it appears to be impractical or not economical to construct the

pumping station building to house future equipment, the DESIGN CONSULTANT presents a comparative evaluation of cost, operability, and constructability issues in the BODR. This evaluation addresses alternative means of providing the desired capacity to meet future capacity requirements. Based on this analysis, the CIP Project Manager directs the DESIGN CONSULTANT before proceeding with final design of the pumping station relative to future expansion.

6.9 Standby Pumps and Equipment

All pumping stations are designed with one standby pumping unit having a capacity equal to the largest pumping unit in the station.

Compressed air systems for pumping stations are provided with one standby air compressor.

6.10 Transient Surge Analysis and Surge Control

The DESIGN CONSULTANT performs the surge analysis and designs a surge control system in accordance with its analysis.

6.10.1 Transient Surge Analysis

The DESIGN CONSULTANT evaluates pumping stations to determine the potential for hydraulic transients. Computer programs for transient analysis are approved by the CIP Project Manager on a case-by-case basis. State-of-the-art computer programs for transient analysis such as LIQT developed by Stoner Associates, Inc., SURGE 5 developed by the University of Kentucky, NETWORK-SURGE developed by John List, or other programs approved by the City of San Diego, are used to evaluate all transient phenomena and proposed surge control measures. Each program, including those listed above, has unique capabilities and must be assessed for each situation to make sure it can handle the complexity of the analysis involved for the particular pumping station. The DESIGN CONSULTANT obtains from the CIP Project Manager any information necessary to properly evaluate transient phenomena in water pipeline(s) connected to pumping station(s) or reservoir(s) that is not included in the DESIGN CONSULTANT'S scope of work.

6.10.2 Surge Control

Surge protection is normally required at all pumping stations. Surge control measures suitable for raw water and treated water pipelines are also employed for reclaimed water pipelines.

Before initiating the detailed design of pumping stations, the hydraulic transient calculations prepared by the DESIGN CONSULTANT are submitted as an appendix to the BODR together with a description of any potential for hydraulic transients and a list of steps the DESIGN CONSULTANT recommends for further action or mitigation of the hydraulic transients. Based on the contents of this documentation, the CIP Project Manager directs the DESIGN CONSULTANT to design the necessary means to mitigate hydraulic transients.

Transient control measures may be considered independent of or in combination for water systems and are limited to the following:

- Water pipeline alignment revisions to eliminate potential column separation zones.

- Shaft-mounted flywheels to increase the rotating movement of inertia.

- Globe-type pump control valves on inlet or discharge pipelines. Both the valve body and flanges are rated to withstand the shutoff head of the pump or maximum surge pressure, whichever is greater. During normal starting and stopping of the pumps, each pump must start against a closed valve. The valve must open slowly to control upsurge. During the pump stopping sequence, the control system initiates closing of the valve. At the completion of the closing cycle, a limit switch confirming complete closure of the valve signals the pump to stop. During emergency power failure, the valve shall automatically closes. Closure time is set to reduce surges in the pipeline. All opening and closing times are independently adjustable, with closing times initially set as recommended in the final surge analysis.

- If surge tanks on discharge pipelines are required, size the tanks to reduce incremental surge pressure increase to a maximum of 33% of the discharge pipeline design pressure. The surge tank is designed, fabricated, and tested in accordance with the ASME Code for Unfired Pressure Vessels, and is equipped with a compressed air system controls to maintain the air-to-water ratio and initiate alarms. Surge tanks are equipped with level probes add/vent air pressure solenoids and pressure switches to maintain water level near center of the tank.

- Installation of a surge anticipator relief valve which senses a loss of power and/or pressure surge wave and opens on set time delay or high pressure respectively. Install piping and valves to provide pressure relief from the pump discharge side to the suction side.

- Installation of a pressure relief valve from discharge manifold to suction manifold for routine pressure rises due to rapid changes in system demand. Operation of relief valve cannot rely on a mechanical actuator or diaphragm.

- Standpipes are not permitted for surge control on Water CIP projects.

6.11 Valves

6.11.1 General

All valves are shown on the design drawings, except small valves which are part of packaged equipment or instrument systems required by the codes or indicated in the equipment specifications. The DESIGN CONSULTANT shows all valves that are normally used by maintenance personnel to isolate equipment or sections of piping, or which are used for normal operation or control procedures. All valves 4 inches and larger are numbered and a schedule for all numbered valves is prepared by the DESIGN CONSULTANT. The valve schedule is shown on the drawings and includes the valve number, pressure rating, type of actuator, type of valve, associated fluid abbreviation, and sheet number of the drawing where the valve is shown. Unless otherwise approved, all mainline valves are the same diameter as the pipeline.

The DESIGN CONSULTANT selects materials for valves to be compatible with the fluid being conveyed and conform to requirements for valves included in the City of San Diego Approved Materials List where possible. The DESIGN CONSULTANT shall choose appropriate valves so that the number of valve types in the pumping station are minimized.

6.11.2 Isolation Valves

In general, all isolations valves are the full-resilient seated gate valves included on the City of San Diego Approved Materials List. Subject to approval by the CIP Project Manager, butterfly valves conforming to AWWA C504 may be used as an alternative to gate valves to isolate equipment.

Isolation valves are installed on the pump inlet, pump discharge line, pump manifold lines, bypass lines and surge protection line for removal and maintenance of pumps and other accessory equipment. Discharge isolation valves are installed a minimum of 3 pipe diameters downstream of pump control valves.

Buried valves are approved for buried service with a watertight bonnet and buried service actuator. Install buried valve actuator extensions, valve wells and valve frames and covers as required and conforming to CSD SD SDW-109 for operation with 7 foot valve keys. All exterior valves are sited within the site security fence.

6.11.3 Pump Control Valves

Pump control valves have an emergency shutdown power check feature for surge protection when power fails. This valve effects controlled closure when flow stops as a result of power failure before flow reversal. The flow control valve also provides pump reverse anti-rotation protection. Pump control valves are provided for controlled valve opening and closing during pump startup and shutdown. Provide a limit switch on the valve to alarm and prevent a pump from starting if the valve is open at the pump “on” call signal and also shut down the pump if the valve does not open within a specific time-delay period. Provide an emergency closing feature to close the valve at the controlled rate in the event of motor power loss. The valve should also provide for manual operation in the event of VFD equipment failure. At this time, the valve becomes a regulating valve so the pumps can operate as constant speed pumps.

During starting of the pumps, each pump pumps against a closed valve. The valve opens slowly to control upsurge. During power failure, the check feature in the valve closes automatically. All opening and closing times are independently adjustable with closing times as recommended in the final surge analysis.

On constant speed only, pumping stations provide wide open when running globe valves.

6.11.4 Air/Vacuum Relief Valves

Air release, air vacuum release or combination air release and vacuum valves are provided at critical locations in the pumping station piping. These valves serve to prevent small quantities of air from being captured inside the piping system, to vent large quantities of air during filing of the piping, and to prevent piping collapse because of vacuum conditions caused by rapid drainage of the piping.

Three air/vacuum relief valve configurations are used to alleviate these conditions. Air vacuum valves must be capable of venting large quantities of air while piping is being filled and allow air to re-enter while the piping is being drained. Air release valves vent accumulating air while the system is in service and under pressure. Combination air valves combine the characteristics of the two previous configurations.

These valves are placed at the end of suction or discharge manifolds or on each pump's suction or discharge pipe as required to prevent air accumulation or to provide vacuum relief.

Provide 2-inch diameter air bleeds (gauge cocks) on each pump suction line if an air release valve is not provided in the line.

On each pump discharge line, provide a gauge cock before the pump control valves and an air release valve after the pump control valve.

All air/vacuum relief valves are connected to the piping manifolds with PVC isolation bushings and stainless steel nipples and are equipped with stainless steel isolation valves and unions to allow easy removal for maintenance.

6.11.5 Drain Valves

Provide a capped fitting on the suction and discharge side of each pump to drain pumps and check for residual pressure during maintenance prior to opening fittings.

6.11.6 Check Valves

Unless otherwise required by a surge analysis, the discharge side of all pumps are provided with pump control valves in lieu of check valves as described in paragraph 6.11.3 of this chapter.

Check valves for pumping station support systems, such as potable water or drainage systems, are heavy-duty swing type check valves with an outside spring and lever.

6.11.7 Corporation Stops for Flow Meters

Provide 2-inch corporation stops on each pump discharge line downstream of the pump control valve for the connection of a pitot tube and/or insertion flow meter to be used for flow measurement. The corporation stops are located a distance at least equal to 8 pipe diameters downstream and 2 pipe diameters upstream of any fitting in the pipe layout which might cause turbulence. Also provide a 2-inch corporation stop on the discharge manifold before leaving the station or, if buried, in a valve vault on the discharge line to allow for measuring total pumping station flow. For flow metering devices, see paragraph 6.15.8 of this chapter.

If the pump discharge piping arrangement does not allow for proper location of the corporation stop, provide the corporation stop for flow measurement in the pump suction line in a vault.

6.11.8 Valve Actuators

All gate valves and butterfly valves (except buried valves) are wheel operated for ease of operation. Wheel actuators are installed in readily accessible positions. Chain wheel actuators are provided with hammer blow starting when located more than 6 feet above floor. Butterfly

valves 6 inches in diameter and larger are equipped with enclosed gear actuators and handwheels.

As a special pumping station requirement, the CIP Project Manager may consider electric actuators for isolation valves 16 inches in diameter and larger. AC reversing-type electric actuators are used for electrically operated isolation valves. Electrical actuators on buried piping are installed in valve vaults for ease of maintenance.

Actuators for pump control valves are described in paragraph 6.11.3 of this chapter.

6.12 Structural Guidelines

6.12.1 Reference Standards and Codes

This section defines the codes, standards, reports and design aids to be used in the design of pumping station structures.

The current version of the following standards, codes, reports and design aids govern and must be used for the structural design of pumping stations:

- Building Code Requirements for Minimum Design Loads in Building and Other Structures, ASCE 7 by American Society of Civil Engineers and ANSI A58.1 by American National Standard Institute, Inc.
- Title 24, Part 2, California Building Code.
- Uniform Building Code (UBC) of the International Conference of Building Officials as adopted by the City of San Diego Municipal Code.
- Building Code Requirements for Reinforced Concrete, ACI 318, and commentary ACI 318R, as contained in UBC and as adopted by the City of San Diego Municipal Code.
- Environmental Engineering Concrete Structures (ACI 350 R).
- Concrete Manual by the U. S. Bureau of Reclamation.
- Concrete Reinforcing Steel Institute (CRSI) Handbook.
- Rectangular Concrete Tanks, by Portland Cement Association (PCA).
- Water resources technical publication, Engineering Monograph No. 27, Moments and Reactions for rectangular Plates by the U. S. Department of Interior Bureau of Reclamation.
- American Institute of Steel Construction, Specification of the Design, Fabrication, and Erection of Structural Steel for Buildings, AISC Publication No. S-326.

- American Institute of Steel Construction (AISC) manual of Steel Construction, Allowable Stress Design (ASD).
- The standard specifications for open web, Longspan, and Deep Longspan Steel Joists and Joist Griders.
- Structural Welding Code Steel, ANSI/AWS-D1.1.
- Specification for the Design of Cold Formed Steel Structural Members, by American Iron and Steel Institute (AISI).
- Specification for Aluminum Structures.
- Engineering Data for Aluminum Structures.
- Specifications for the Masonry Structures, ACI 530/ASCE6.
- Reinforced Masonry, Engineering Handbook by Amrhein.
- Timber Construction manual, by the American Institute of Timber Construction (AITC).
- National Design Specifications for Stress-grade Lumber and its Fastenings, by National Forest Product Information.
- Recommended Lateral Force Requirements and commentary by the Seismology Committee of the Structural Engineers Association of California, commonly known as Blue Book, (SEAOC Blue Book).
- Formulas for Stress and Strain, by Roark and Yong.
- Standard of the Occupational Safety and Health Administration (OSHA).
- State of California Construction Safety Orders (Cal-OSHA).
- Book 2, Chapter 8, Seismic Criteria.

6.12.2 Design Loads

The following criteria define the minimum design loads to be used in the design of pumping station structures. Without limiting the generality of the other requirements of these criteria, all design loads must conform to or exceed the requirements of the UBC and all applicable requirements of other documents referenced in paragraph 6.12.1 of this chapter. Seismic loads must be in accordance with the seismic loads described in Chapter 8, Seismic Criteria.

Dead loads, live loads, wind loads, hydrostatic and hydrodynamic loads, lateral loads, seismic loads, impact and vibration loads and miscellaneous loads are described below.

A. Dead Loads

Dead loads, which are defined as the weight of all permanent construction, including equipment and piping, permanently connected to the pumping station are determined using the following unit weights:

Material	Dead Load
Concrete	150 pcf
Steel	490 pcf
Aluminum	169 pcf
Fiberglass	100 to 115 pcf
Wood	40 pcf
Masonry, concrete block, solid grouted 8 inches wide	75 psf (lightweight) 84 psf (normal weight)
12 inches wide	118 psf (lightweight) 133 psf (normal weight)

In addition to the load of the basic structural elements, the following items are considered dead load:

- All equipment (including all internal and refractory lining) and piping permanently attached to and considered part of the structure, including future equipment and piping.
- Fireproofing used on structural steel, equipment, etc.
- Structural steel platform framing and floor plates (use an estimate of 20 psf). Heavy beams or girders, such as those required to carry other than platform live loads, are considered separately.
- Piping 12 inches in diameter and smaller are treated as uniformly distributed loads. A typical minimum value of 20 psf is used.
- Piping larger than 12 inches in diameter is treated as concentrated loads.

B. Live Loads

Live loads in addition to concentrated loads are determined as follows:

- Roof Loads: in accordance with the ASCE 7/ANSI A58.1, UBC, or local code, whichever is more stringent.
- Stairs, Platforms, and Walkways: 100 psf or local code, whichever is more stringent.
- Minimum concentrated load on ladders and stairs is in accordance with the requirements of ANSI-A58.1, OSHA, Cal-OSHA or local code, whichever is more stringent.

- Electrical equipment areas are designed for a minimum of 100 psf live load. Additional consideration is given for the type, size, and weight of specific equipment and the maintenance of equipment in determining the actual design live load and concentrated loads. Minimum loads for some specific areas are:

  - Pump Room or Generator Floor 150 psf
  - Auxiliary Equipment and Control Rooms 250 psf
  - Equipment Rooms 200 psf

- Mechanical areas are designed for a minimum 100 psf of live load. Additional consideration should be given for the type, size, and weight of specific equipment and the maintenance of equipment in determining the actual design live load and concentrated loads. Minimum loads for some specific areas are:

  - Equipment Floors 300 psf
  - Shaft, Duct or Vent Floors 100 psf
  - Lifting eyebolts capable of lifting concentrated equipment loads is incorporated into design as live loads.

C. Wind Loads

Wind loads must be in accordance with the ASCE 7/ANSI A58.1, UBC, on the basis of a minimum basic wind speed of 100 mph and appropriate exposure or the requirements of the local code, whichever is more stringent. The design is governed by maximum wind or maximum seismic loads, whichever is greater.

D. Hydrostatic and Hydrodynamic Loads

Pumping station structures are considered environmental engineering structures and are designed for hydrostatic forces imposed by the fluid contained in these structures. All environmental engineering structures are designed for hydrodynamic forces using the ground acceleration and the response spectra provided by the geotechnical report and in accordance with the seismic loads described in this chapter.

E. Lateral Loads

All pumping station structures are designed for the applicable pressures, as follows:

- For all yielding structural components, lateral soil loads are determined by using active soil pressure conditions as recommended in the geotechnical report.

- For all non-yielding structural components, lateral soil loads are determined by using at-rest soil pressure conditions as recommended in the geotechnical report.

- A minimum surcharge pressure equal to an additional 2 feet of soil is used for all structures adjacent to the traffic loading conditions.

- Hydrostatic pressure imposed by the fluid contained is considered in the design. The unit weight of water is 62.4 pcf.

- Hydrostatic pressure imposed by groundwater conditions in addition to lateral soil pressure are considered in the design. The unit weight of water is 62.4 pcf. Lateral pressure distribution is as recommended in the geotechnical report.

- Seismic soil pressure is determined in accordance with the seismic loads described in Chapter 8, paragraph 8.5.1.

F. Seismic Loads

Seismic loads must conform to or exceed the requirements provided in Chapter 8, Seismic Criteria.

Basic guidelines for determining the design ground acceleration and seismic forces include:

- Seismic lateral loads due to soil and water are determined in accordance with the recommendations in the geotechnical report.

All seismic forces must be determined using the preceding guidelines and load factors given in ACI 318 and ACI 350R.

- When selecting ground motions for seismic design of pumping station structures, consider the requirements for uninterrupted operation after a major earthquake.

G. Impact and Vibration Loads

If applicable, impact and vibration loads are considered in the design as follows:

- Craneways are designed to resist a horizontal transverse force equal to 20% of lifted load plus the weight of the trolley, applied at the top of the rails and distributed with due regard for lateral stiffness of the structure supporting the rails. Craneways must also resist a horizontal longitudinal force equal to 10% of the maximum wheel loads of the crane applied at the top of each rail.

- For structures carrying live loads which include impact, the assumed live loads must be increased in accordance with the current edition of American Institute of Steel Construction, Specification of the Design, Fabrication, and Erection of Structural Steel for Buildings, AISC Publication No. S-326.

- All forces produced by the equipment or machinery having a tendency to vibrate are considered in the design of supporting structures. The

magnitude of force is obtained from the equipment supplier for use in the design.

- Impact forces due to process operation such as surging fluid.

H. Miscellaneous Loads

If applicable, miscellaneous loads are considered in the design as follows:

- Miscellaneous loads of a special nature, such as thrust from expansion joints and special appurtenances.
- Surcharge loads, such as due to adjacent structures and vehicular loads.
- Thermal loads.
- Operating pressure forces, forces due to surging fluids and test forces and loads.
- Construction loads and conditions.

6.12.3 Loading Combinations

Structures are designed for various loading conditions. As a minimum the following load combinations are determined:

- Static soil pressure (active or at rest) plus hydrostatic loading plus hydrodynamic loading plus seismic forces due to dead loads.
- Static soil pressure (active or at rest) plus seismic soil pressure plus seismic forces due to dead loads plus permanent surcharge.
- Suspended Slabs Walls and Roofs: Dead loads plus seismic dead loads or wind load, whichever is greater, plus percent of live load as required by the UBC.

6.12.4 Allowable Stresses

All allowable stresses listed in the following paragraphs may be increased by 33% for seismic loading for evaluations performed using working stress methods.

A. Reinforced Concrete Structures

Allowable stresses for concrete structures must be in accordance with ACI 318/ACI 350R.

B. Steel and Aluminum Structures

Unless modified for various major facilities, the allowable stress steel members and connectors must be in accordance with the requirements of the allowable stress design method of the AISC specification.

Allowable stress for aluminum members must be in accordance with the requirements of the specifications of the Aluminum Association.

C. Masonry Structures

Allowable stresses for masonry structures must be in accordance with the requirements of the ACI 530 and UBC.

D. Timber Structures

Allowable stresses for timber structures must be in accordance with the requirements of the National Design Specifications for Stress-Grade Lumber and its Fasteners, Timber Construction Manual by AITC and UBC.

6.12.5 Structural Design Requirements

A. Reinforced Concrete Structures

Reinforced concrete structures are designed using the strength design method or the working stress method pursuant to the following requirements:

- The structural design of reinforced concrete environmental engineering structures and support facility structures must be in accordance with the general requirements of ACI 318 and ACI 350R.

- Reinforced concrete environmental engineering structures are designed for strength and serviceability. The strength design method and the working stress design method (an alternative design method) are acceptable methods of reinforced concrete design.

- The structural engineer must establish the design criteria for each structure within the limitations of the ACI and the UBC.

- **Strength Design Method.** Use the following guidelines in applying the strength design method:

  — All concrete support facility structures such as administration, operation, and process building which are not considered environmental engineering structures (hydraulic structures) must be designed by the strength design method in accordance with ACI 318.

  — All environmental engineering structures (hydraulic structures) are **not recommended** for design by the **strength design method** in accordance with ACI 318. However, if structural engineers choose to use the **strength design method,** the load factors of ACI 318 are modified in accordance with the ACI 350R. The load factor modifications must be in accordance with Section 2.6.5 of ACI 350R.

— Serviceability requirements for both support facility structures and environmental engineering structures must be in accordance with the provisions of the ACI 318 and Section 2.6.6 of the ACI 350R.

- **Working Stress Design (Alternative Design Method).** Use the following guidelines in applying the working stress design:

  — The alternative design method must be in accordance with the ACI 318, Appendix A, and the exceptions given in Section 2.6.7 of the ACI 350R.

- **Minimum Material Strength.** Minimum strengths for concrete and reinforcing steel are:

  — Concrete: 28 day compressive stress of 4,000 psi.
  — Reinforcing Steel: Yield strength of 60,000 psi per ASTM A615.

- **Joints.** Expansion, contraction and construction joints must be provided in accordance with ACI 350R to allow flexibility and to adequately tolerate differential movements, as well as temperature and shrinkage stress. All types of joints in environmental engineering structures are provided with waterstops and sealant where water tightness is required. All joint detailing, type and location criteria must be in accordance with Section 2.8 of ACI 350R. The locations of all joints are shown on the drawings.

- **Expansion Joints.** In general, expansion joints are provided at abrupt changes in the structural configuration.

- **Contraction Joints.** Contraction joints are a type of movement joint used to dissipate shrinkage stresses. If used, contraction joint spacing is at intervals not to exceed 24 feet, unless additional reinforcement is provided in accordance with Figure 2.5 of the ACI 350R. For environmental engineering structures in high seismic zones, partial contraction joints where 50% of the reinforcement passes through the joint, are used.

- **Construction Joints.** Construction joints are located so as to least impair the strength of the structure, to provide logical separation between segments of the structure, and to facilitate construction. All reinforcement is continued across or through the joint unless designed as a contraction or expansion joint.

- **Lifting Devices.** Lifting devices are provided as required. Lifting devices have galvanized coating to reduce corrosion and are mechanically connected to rebar where reinforced concrete construction is used.

- Book 2, Chapter 8, Seismic Criteria, including paragraph 8.3.4(C).

B. Steel Structures

Steel structures must be designed in accordance with the requirements of AISC specifications and following additional requirements:

- **Seismic Design.** Seismic design must be in accordance with paragraph 6.12.2.F of this chapter and Chapter 8, Seismic Criteria, including paragraph 8.3.4(D).

- **Minimum Material Strength.** Minimum strength is as follows:

  — All structural steel shapes, plates, and bars must be ASTM A36.

  — Structural steel pipe must be ASTM A501 or ASTM A53, Type E or S, Grade B.

  — Structural tubing must be ASTM A500, Grade B.

  — Composite beam with formed steel deck (FSD) may be used for floor support. Economics determine the usage. Composite design must be in accordance with the requirements of the AISC, Manual of Steel Construction.

  — Formed steel deck must be in accordance with the requirements of AISI specifications.

  — Open web, longspan and deep longspan steel joists can be used for roof support; camber and other requirements must comply with the specifications of SJI.

  — Crane supports are designed for a maximum deflection of 1/450 times the span or as required by the equipment manufacturer, whichever is more restrictive.

  — All aluminum shapes, plates, bars and pipes must meet minimum requirements of ASTM 6061-T6 alloy.

  — All stainless steel shapes, plates, bars, pipes, anchor bolts and fasteners must meet the requirements of ASTM A167 and ASTM 276, Type 316.

- **Joints.** Structural joints or connections are bolted or welded and must be designed in accordance with the requirements of AISC Specifications and the following additional requirements:

  — Connection bolts must be ASTM A307, A325 or A490. When high strength bolts are used, Type N connections are used for regular framing design. When structural members are subjected to vibration, cyclic or fatigue loading SC connections are used.

— Connections are designed for all tributary forces and the minimum force is 6 kips.

— All welding must be in accordance with the requirements of ANSI/AWS D1.1 code. All butt and bevel welds are complete penetration. E70XX electrocodes are used.

— Shop connections are either welded or bolted. Use field bolt connections when possible.

— All aluminum and stainless steel connections must be made with type 316 stainless steel fasteners meeting the requirements of ASTM A167 and ASTM A276.

C. Masonry Structures

Masonry structures must be designed in accordance with the requirements of Specifications for the Masonry Structures, ACI 530/ASCE 6, UBC, and the following additional requirements:

- **Seismic Design.** Seismic design must be in accordance with the paragraph 6.12.2.F of this chapter and Chapter 8 Seismic Criteria, including paragraph 8.3.4(B).

- **Minimum Material Strength.** Minimum strength is as follows:

  — Concrete Blocks: 28 days compressive strength of 1,500 psi meeting the minimum requirements of ASTM C 90, grade N, Type I.

  — Mortar for Unit Masonry: Meeting the minimum requirements of ASTM C270, type M or S, or the requirements of UBC.

  — Reinforcing Steel: Yield strength of 60,000 psi per ASTM A615.

  — Cold-Drawn Steel Wire: ASTM A82.

  — Mortar and Grout for Reinforced Masonry: Meeting the minimum requirements of ASTM C476 or the requirements of UBC.

- **Joints.** Expansion and control joints must be provided in accordance with the requirements of ACI 530/ASCE 6, UBC, and the Engineering Handbook Reinforced Masonry by Amrhien.

D. Timber Structures

Timber structures must be designed in accordance with the requirements of the National Design Specification for Stress-Grade Lumber and its Fastenings, UBC, and the following additional requirements:

- **Seismic Design.** Seismic design must be in accordance with paragraph 6.12.2.F of this chapter and Chapter 8, Seismic Criteria, including paragraph 8.3.4(A).

- **Minimum Material Strength.** Minimum strength is as follows:

  — Beams and Stringers: Douglas Fir-Larch (surface dry or green used at 19% maximum moisture content).

  — Plywood: Douglas Fir Plywood, Structural Type I.

  — Allowable Stresses: Refer to paragraph 6.12.4.D of this chapter.

- **Joints.** Structural joints or connections are bolted type and must be designed in accordance with the requirements of the National Design Specifications for Stress-Grade Lumber and its fasteners and the UBC.

6.12.6 Detailing

Detailing is performed in accordance with the seismic provisions of the following codes and references:

1. The latest edition of UBC.

2. The provisions in Chapter 21 of the latest edition of ACI 318.

3. The provisions in the latest edition of ACI 350R.

4. Detailing of different structural elements to ensure that ductility and other requirements are in accordance with the requirements of the UBC and SEAC Blue Book.

5. Book 2 Chapter 8, Seismic Criteria, including paragraph 8.3.4, Special Detailing Requirements.

6.12.7 Major Element Design Requirements

These procedures define general guidelines for the DESIGN CONSULTANT when designing major elements of pumping station structures.

A. Concrete Slab

The following structural concepts must be considered when designing reinforced concrete slab:

- A one-way or two-way slab system with beams.

- When the slab system is rigidly connected to the walls, a frame analysis is performed in which the relative rigidity and stiffness of the different elements are considered.

- Control, construction and contraction joints must be provided in the slab structure system in accordance with the ACI 350R. Roof joints are aligned with wall joints.

- On large exposed slabs used in pumping station structures requiring expansion joints, ductile moment resisting frames are provided to resist seismic forces. The maximum recommended spacing for expansion joints is 120 feet.

B. Concrete Walls

The following structural concepts are considered in designing concrete walls:

- Cantilever walls, which are considered yielding walls, and active soil pressure.

- Walls restrained at the top, which are considered non-yielding walls, and at rest soil pressures.

- For long structures, where walls are designed as cantilever, consider restraint at the end or cross walls.

- Contraction, construction and expansion joints must be provided in walls in accordance with ACI 350R. All wall joints should line up with slab joints. The maximum recommended spacing of expansion joints is 120 feet. All joints are provided with waterstops.

- Reinforced concrete walls over 10 feet high in contact with water shall have a minimum thickness of 12 inches. The minimum wall thickness of any reinforced concrete structure is 8 inches.

C. Concrete Foundation

Unless groundwater or other geotechnical requirements dictate a mat foundation, the foundation consists of a spread-footing cast monolithically with the floor slabs. Floor slabs are designed as a membrane reinforced concrete slab with a minimum 6-inch thickness. The floor slab is provided with contraction, construction and expansion joints detailed and spaced to allow movement at these joints and to adequately tolerate differential settlement, temperature and shrinkage stresses.

Where a mat foundation is required, it is designed as a slab on an elastic foundation or by other accepted rational method.

All foundations and floor slabs must be provided with contraction, construction, contraction and expansion joints in accordance with the recommendation of the ACI 350R. All joints are provided with waterstops.

D. Equipment Footing

Equipment support is designed for the maximum load under operating or testing conditions. Only 50% of floor live load is combined with the test loading in the design. Test and seismic loading need not be combined.

The most unfavorable effects from wind and seismic loads are considered in the design. Wind and seismic loads are assumed not to be acting on the equipment simultaneously. The factor of safety against wind and seismic overturning and sliding is not less than 1.5. Piping connected to the equipment may not be used as a means to resist the wind or seismic loading.

Movement and shear acting on equipment support caused by removing any components from the equipment is considered in support design.

E. Support for Rotating and Reciprocating Equipment

The effect of impact, vibration, and torque from the equipment must be considered in accordance with the requirements of Section 2.9, ACI 350R. In the absence of equipment data required for the support structure vibration design, preliminary support is sized by $W_1/W_2 = 3$ (minimum).

Where: W_2 = weight of equipment

W_1 = weight of supporting structure, or

= in horizontal direction, weight of entire diaphragm, or

= in vertical direction, weight of an area equal to the shadow area + 2t (where t = thickness of supporting slab), or

= weight of pedestal

Final support design must be in accordance with the requirements of Section 2.9, ACI 350R.

Support is isolated from the surrounding slab to minimize the effect of vibration on adjacent structure whenever possible.

Equipment is anchored to the support using anchor bolts. Bolts are designed for vibration, impact, torque, seismic and wind loading. Only type 316 stainless steel bolts are used to anchor equipment. Minimum bolt size is 3/4-inch. Expansion anchors may not be used to anchor equipment. The requirements of Chapter 8, Seismic Criteria, paragraphs 8.9.3 and 8.9.4 (equipment anchorage) shall also apply.

6.13 Sitework

6.13.1 Site Constraints

The DESIGN CONSULTANT reviews the Predesign Report from the Water CIP for site constraints that may affect the design appearance, character, materials selection, earthwork, and location on the pumping station site. Views of the facility from areas surrounding the

project site are analyzed, and alternatives discussed to harmonize the appearance of the facility with its visual context. Regardless of the visual circumstances, the pumping station operating floor is in all cases located above the 100-year flood elevation.

Pumping station sites may not be located on easements, but must be entirely located on City of San Diego-owned land.

6.13.2 Construction Sequencing

Where bypass pumping for an existing pumping station is required, the DESIGN CONSULTANT provides a sequence of construction on the drawings and in the special provisions of the specification, describing the required construction sequence for performing the bypass operation.

6.13.3 Site Utilities

The DESIGN CONSULTANT identifies and coordinates with appropriate local utility agencies representatives as described in Chapter 12 of Book 1, Utility Coordination. The DESIGN CONSULTANT also refers to the Predesign Report for any available information on utilities that might be impacted by each project.

The DESIGN CONSULTANT designs the water service with a reduced pressure backflow protection device installed after the water meter, in accordance with City Standards. The site water piping system should include a 3/4-inch water riser and hose bibb placed inside the pumping station building for cleaning the building and adjacent site. The design includes parking posts placed around the reduced pressure backflow prevention device to protect it from damage due to traffic.

6.13.4 Access and Parking

A vehicle access road at the pumping station site allows the positioning of a crane truck of the size required for removal of the largest pumping station equipment through roof hatches when appropriate.

The site also includes sufficient parking space for two 3-ton maintenance trucks.

Avoid locating truck or crane truck access road and parking over inlet discharge piping penetrations into the pumping station walls to avoid pipe shear loadings at these locations.

All vehicle access roads to pumping stations are asphalt paved and a minimum of 24 feet wide.

6.13.5 Security

The pumping station site is normally completely enclosed by a 6- to 8-foot high fence. The fence is chain-link or architectural wrought iron type to meet community architecture requirements. The fence has webbing to reduce station visibility if required by a community architecture review. A 6-foot high masonry brick wall around the station may also be constructed where appropriate to match existing architecture. All pumping station outside isolation valves, valve vaults, domestic water fixtures, irrigation system fixtures are located

inside the site security fencing. If possible, the security fence is located on or immediately adjacent to the property line.

As a special pumping station requirement, the DESIGN CONSULTANT may be required to design a video camera-based security system with strategically located cameras and an intrusion alarm system.

6.13.6 Site Lighting

The pumping station site lighting is controlled by a photocell equipped with manual on/off control. For outdoor lighting, the DESIGN CONSULTANT selects luminaries that produce the least glare over the surrounding area.

Exterior fixtures are vandal-resistant.

6.13.7 Landscaping

All pumping stations are landscaped in a manner that meets community standards and conforms to the City of San Diego Landscape Technical Manual. The landscape design must be perceived as an extension of the concepts established for the materials and form of the building selected to blend with adjacent areas. Landscape designs must be developed by a licensed landscape architect.

The landscape development of pumping station sites is kept to the minimum and is low maintenance. Irrigation systems and plant material are installed outside the City's security fence unless it is absolutely necessary to screen objectionable views of the facility from the community or to prevent the erosion of manufactured slopes.

The DESIGN CONSULTANT conforms to the requirements of the latest current edition of the following City-approved documents:

- Landscape Technical Manual, City of San Diego Planning Department, City Clerk Document.
- Rules and Regulations for Reclaimed Water Use and Distribution Within the City of San Diego, Clean Water Program.
- Consultants Guide to Park Design, Rights-of-Way and Open Landscaping, City of San Diego Park and Recreation Department.

Landscaping selected by the DESIGN CONSULTANT should be drought tolerant. Landscaped features on the pumping station site should be low maintenance and low irrigation (xeriscaping) types.

Landscaped areas are provided with an automatic irrigation system. A reduced pressure backflow prevention assembly is placed in the irrigation piping system to protect the domestic water supply from pollution. A framed, laminated control schematic drawing of the installed irrigation system is mounted in the door of the controller cabinet inside the pumping station.

6.14 Station Support Systems

6.14.1 Ventilation

The DESIGN CONSULTANT designs ventilation to cool the facility using outside air as a cooling medium. The DESIGN CONSULTANT calculates the total sensible cooling load for the pump station building/structure, including both external loads (building/structure envelope) and internal loads (motors, occupancy, lighting, and miscellaneous heat generating equipment). The required ventilation rate must be based on ASHRAE HVAC Applications, Chapter Ventilation of the Industrial Environment, paragraph Ventilation Airflow for Temperature Control, latest edition. The calculation formula is:

$$Q = qs/1.08\ \Delta t$$

Where:

Q = required ventilation rate, cfm
qs = total sensible heat to be removed, Btu/hr
Δt = temperature rise of the air, °F

The DESIGN CONSULTANT must use ASHRAE Weather Data for Region X for the project location, summer 2% Dry Bulb Temperature column (°F as design outdoor air temperature, and Δt = 10°F).

If no significant sensible cooling load is encountered, the DESIGN CONSULTANT uses 6 air charges per hour or 1.5 cfm/sf, whichever is greater, as a minimum with ASHRAE recommended Outdoor Air Requirements for Ventilation (ASHRAE Standard 62-1981).

The ventilation system must conform to the following codes standards and guidelines unless superceded by more stringent local codes:

- American Society of Heating, Refrigeration, and Air Conditioning Engineers (ASHRAE)
- Cal-OSHA General Industry Standards
- National Electric Code (NEC)
- National Fire Protection Association Standards (NFPA)
- Sheet Metal and Air Conditioning Contractors National Association (SMACNA) Standards
- Uniform Building Code (UBC)
- Uniform Fire Code (UFC)
- Uniform Mechanical Code (UMC)

Design the ventilation system for noise levels as described in subsection 6.19 of this chapter. This noise limit includes the sum of fan intake, fan discharge, motor, and casing rotation noise. The maximum fan noise load at 1 meter distance is 85 dBA. Ventilation systems must specify the use of low noise fans.

Provide replaceable dust filter elements on inlet wall louvers or supply air fans. Inlet ventilation dust filters are installed to minimize entry of dust into the station. Filters are located at access doors in the ducting, fan heads, and at convenient locations for maintenance access. Provide a label on the ducting at the filter access location to alert operating personnel to the need to check

or replace filters at specified intervals or as measured by a differential pressure gauge. Inlet wall louvers are weatherproof and are equipped with a bird screen or insect screen, as applicable.

Inlet/discharge silencers may be required for noise attenuation. If an inlet/outlet blower system requires noise attenuation, a silencer is provided.

As a special pumping stations requirement, exhaust louvers have motor operated grates that open when the ventilation system is in operation.

Pumping station ventilation systems operate by thermostatic control with manual on/off override.

Underground pumping station areas in coastal and other high-humidity areas are equipped with a wall-mounted dehumidification system.

6.14.2 Overhead Hoist

The DESIGN CONSULTANT designs an overhead hoist system for the installation, disassembly, maintenance, and removal of piping, motors, pumps, valves, flow meters, and other major components in the pumping station. Design of all hoists must be in accordance with the Hoists Manufacturers Institute.

On large pumping stations with three or more horizontal split case pumps having motors of 100 hp or greater, the DESIGN CONSULTANT designs a traveling bridge crane of the top running type consisting of electric drives, end truck, trolley hoist, and controls.

On smaller pumping stations with a horizontal pumping configuration, the DESIGN CONSULTANT designs a hoist system using monorails or jib crane systems with manual hoists.

On pumping stations using vertical turbine pumps, the DESIGN CONSULTANT provides roof access hatches or operable skylights for removal of pumps and motors using truck-mounted mobile cranes. A monorail or jib crane system with manual or electric hoists is provided for maintenance and repair over control valves and flow meters.

Install a high access door at the end of the crane rail to allow for positioning a truck-mounted crane inside the station for the removal of equipment.

On some pumping stations, embedded eyebolts may be provided to assist in equipment removal.

6.14.3 Water Supply and Toilet Facilities

The potable water supply is protected by a reduced pressure principle backflow preventor in accordance with local code requirements. The DESIGN CONSULTANT requires the Construction Contractor to obtain the water permit and pay all installation costs for a 1-inch meter service (meter to be installed by the City) per RSD SDW-100, SDW-112, W-1, and W-15 (if applicable). The Construction Contractor is also required to pay water billings until final acceptance of the pumping station by the Water CIP.

As a special pumping station requirement, some stations may be designated for inclusion of toilet facilities. No station has toilet facilities that cannot be discharged to a municipal sewer

system. All sanitary drains designed by DESIGN CONSULTANT must be in conformance with Uniform Plumbing Code (UPC) and all local codes.

6.14.4 Instrument Air

Instrument air systems, when required, are designed for a maximum system pressure of 60 psig. Compressors are nonlubricated, air- or liquid-cooled, sized for not less than 12 cfm per unit, but in any case, at least 20 times the anticipated maximum air demand. The maximum compressor noise level at one meter distance is 85 dBA. A redundant compressor is provided. ASME-approved receivers are sized to provide a run time of not less than 15 minutes. Compressed air is aftercooled and dried using a regenerating desiccant air dryer. Dryers are installed on the system side of receivers and are sized for not less than twice the anticipated air demand.

6.14.5 Pump Room Drainage System

The drainage system consists of a floor drain, hub drain, cast iron drain pipe, holding sump and sump pumps. The drainage system is designed to handle drainage from the pump seals, power check valves, air release valves, and housekeeping. Floor drains are located and floor slopes designed so that equipment pads do not interfere with drainage. The drainage system is discharged to the municipal sewer system. The DESIGN CONSULTANT consults with the local governing authority to design the drainage system to meet all applicable codes, including cases where a municipal sewer is not available. If required, the holding sump is designed with adequate volume to prevent the pump from cycling in excess of the number of starts per hour recommended by the motor manufacturer. The sump is covered with aluminum grating.

Sump pumps are duplex-type submersible pumps complete with lifting chain, discharge valve, check valve, and piping, starter, level controls, and automatic alternator. High water level alarms are connected to the main pump station control panel.

6.14.6 Fire Extinguisher

A fire extinguisher rated for Class A, B, and C type fires is installed in each pumping station. If an emergency generator is included in the pump station design, a similar fire extinguisher is also provided in the engine room in the outside generator enclosures.

6.15 Instrumentation and Controls

6.15.1 Pump Control Description

The DESIGN CONSULTANT describes the pump control sequence description, including control valve operation, safety interlocks and control resets. These descriptions are titled “Control Strategies” and are sufficiently detailed to guide the Construction Contractor in programming the programmable logic controller (PLC). The DESIGN CONSULTANT refers to Book 1, Chapter 7, for communications requirements for SCADA RTUs.

Two types of pump sequence control are covered: pressure control, normally used for pumps designed to maintain a pressure set point in a closed zone and level control, where the pump sequencing depends on level set points in reservoirs and standpipes. A third type of control may be required where the pump station serves a closed zone and a reservoir simultaneously.

This type of control may combine the requirements of pressure and level control if the pressure and flow rates cannot be met by constant speed pumps alone.

6.15.2 Pressure Control of Pumps

The DESIGN CONSULTANT determines the control philosophy based on the number of pumps, the flow capacity of each pump if different sizes are used, the pump curves, and the pipeline system head curve. To meet the closed zone pressure set point requirements at wide flowrate ranges, the pumps are driven by variable frequency drives (VFDs). The DESIGN CONSULTANT determines the rpm range for controlling each pump by examining the pump efficiency curves versus the flow curves. For instance, driving the pump past, 90% flowrate capacity may cause a disproportional increase in electric power consumption.

Pressure surges caused by the transition from one-pump to two-pump operation, two to three, etc., must be avoided as described in the following control sequence.

6.15.3 VFD Pump Control Sequence

The following pump control sequence assumes a four-pump closed pressure zone, three pumps active, one on standby, same size and driven by VFDs. The pump control sequence is performed by the PLC with a programmed software logic and adjustable software timers. As the minimum pressure set point for pump operation is reached, the first pump starts up at minimum rpm. As the flowrate demand increases and the measured pump station discharge pressure decreases, the pump rpm increases to a programmed maximum. When an additional pump is required, the PLC starts up a second pump at minimum speed and keeps the running pump at maximum rpm. As the flow demand increases, the second pump rpm increases to its maximum and with increasing demand the third pump starts at minimum rpm while the first and second pumps continue to run at a maximum rpm. When the flow demand decreases, the pump sequence reverses order. The fourth pump remains on standby until the pump rotation places it in active duty.

The preceding example assumes a VFD for each pump and all pumps of the same size. This arrangement provides smooth transition when additional pumps are started or stopped. The DESIGN CONSULTANT may propose a control system that uses VFDs and constant speed pumps to reduce cost. However, this proposal must be supported by pump and system curves for the specific pump station and approved by the CIP Project Manager.
The VFD for each pump is provided with an across the line bypass motor starter selected by a 2-position switch to be used in case of VFD failures or upset conditions.

6.15.4 Pumping Station Surge Control

The DESIGN CONSULTANT provides the means to avoid surges on pump start/stop operation. The means to achieve surge control may consist of pump discharge control valves, hydropneumatic surge tanks, pressure relief valves, or a combination of them. Pump discharge control valves are covered in paragraph 6.11.3 of this chapter. Control valves are provided with valve position limit switches (open/closed) so that the PLC verifies that the valve is closed before starting and stopping the corresponding pump. If hydropneumatic surge tanks are provided, they must have a complete control system and alarm outputs to the PLC. The alarms must include high or low water level, air compressor trouble, etc. The DESIGN CONSULTANT provides and the surge tank vendor verifies calculations defining tank capacity, water/air level

ratios, and the connecting pipe size that determines the water flowrate in and out of the surge tank.

6.15.5 Level Control of Pumps

Pump stations designed for reservoir level control are sequenced based on reservoir level set points. The pumps are normally of the same size with solid-state soft start motor starters and bypass contactors.

The reservoir level signal is transmitted to the pumping station by remote microwave radio or leased line telemetry.

6.15.6 Level Control Pump Sequence

Pumping stations designed to feed reservoirs or tanks are provided with single-speed pump motors. The PLC control logic is designed to avoid excessive pump cycling. The start/stop cycles per hour are within the motor manufacturers specifications. The PLC program allows the operator to perform level set points and timer adjustments through the operator interface on the control panel. The timers are intended to delay the start/stop of pumps upon detection of reservoir level set points.

6.15.7 Typical Level Control Sequence

Assume three constant speed pumps filling a reservoir. The PLC interlocks prevent simultaneous pump starts, which could happen after a power failure when two or more pumps are running. In that case, 15-second intervals are allowed between pump starts.

A. Sequence Control Description

Figure 6-3 shows that the reservoir water level has been at the top of band 1 and drops to the bottom of band 1. After an adjustable delay start pump 1. If the level remains within band 1 and 2, continue pumping with pump 1. When the level rises to the top of band 1, stop pump 1. If the level drops below band 2 while pump 1 is on, start pump 2. When the level rises to the top of band 2, stop pump 2. This sequence repeats similarly for pump 3. Pumps are rotated periodically or at each cycle to allow equal wear. Pump rotation is displayed on the operator interface.

Figure 6-3
Typical Pump Level Control Diagram

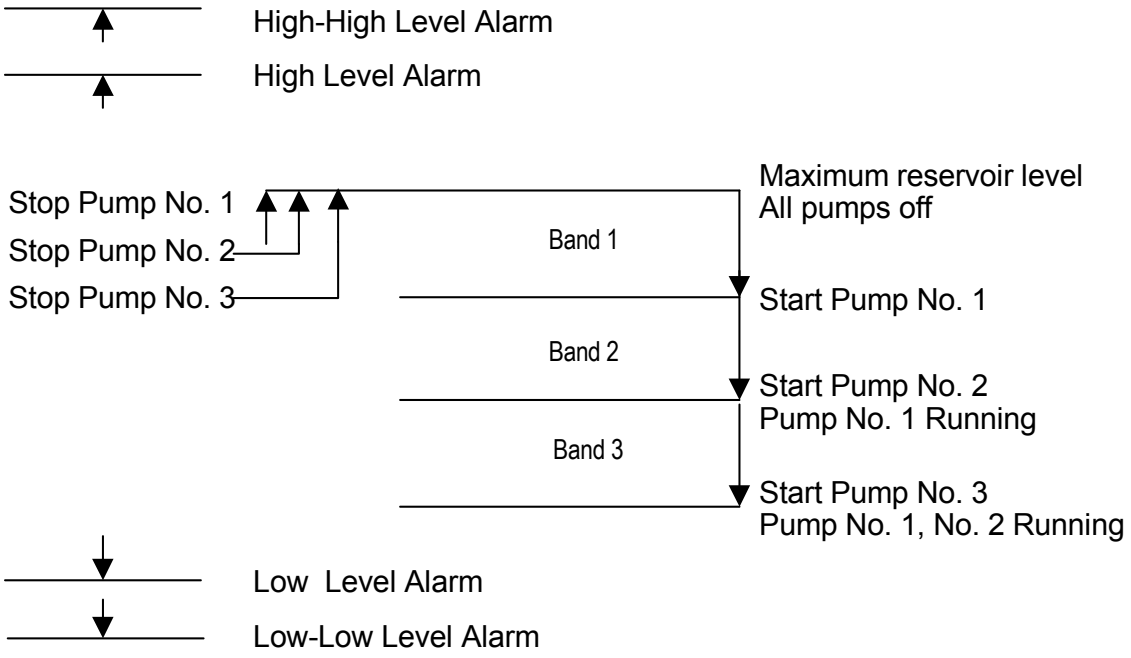

6.15.8 Flow Measurement and Pressure Instrumentation

In addition to the pump discharge header pressure transmitter, an in-line magnetic flowmeter is installed in new pump stations on the station suction or discharge piping to monitor pumping station throughput. A pressure transmitter and a pressure switch is also installed on the pump station suction header. In the event of low suction pressure, the PLC shuts down the pumps sequentially until the header suction rises to safe levels or until all pumps are turned off.

Flowmeter selection includes an evaluation of the facility criticality, including consideration of a shutdown necessary for meter maintenance. Magnetic flowmeters are preferred for new facilities; however, insertion flowmeters may be permitted by the CIP Project Manager.

6.15.9 Control Panel Pump Selector Switches

Three position selector switches for each pump are provided on the control panel. The positions are H-O-A. In the “H” (hand) position, the pump runs continuously without PLC control. This mode is for testing or emergency only. In the “O” (off) position, the pump is shut down and cannot be started. In the “A” position, the pump start/stop operation is controlled by the PLC based on the logic programmed by the Construction Contractor.

6.15.10 Control Panel Operator Interface

To minimize the number of pushbuttons and switches and provide process graphics and alarm data to the operator, an operator interface is provided on the control panel. The graphics are configured by the Construction Contractor in coordination with the City's Telemetry, Power, and Control Group. The operator interface is Modicon Panelmate 3000 or equal.

6.15.11 Pump Station Telemetry

Pump station data transmission to the AWTF Central Control System must be effected as described in Book 1, Chapter 7, Telemetry/Control.

As a minimum, the telemetry data transmitted including:

- Pump running
- Motor high temperature
- Pump circuit breaker/motor starter failure
- Control power failure
- Main power phase unbalance/failure
- Pump control valve failure
- Low suction pressure
- Discharge flow rate and pressure
- Pump room flooding
- Intrusion alarm
- Generator run status and failure
- Ventilator fan failure, etc.
- Pumping station ambient temperature
- Communication failure

6.16 Electrical Design and Emergency Power Generator

6.16.1 Electrical Design Work

The DESIGN CONSULTANT conducts all electrical studies required for the BODR (e.g., relay coordination, short circuit, voltage drop and motor starting analysis). The DESIGN CONSULTANT also prepares the technical specification sections necessary to assemble a complete electrical package and develops the electrical drawings for pumping stations necessary to construct a complete electrical package.

At existing pumping stations where additional load is being added to the distribution system, the DESIGN CONSULTANT obtains the maximum electrical demand reading for the past two years from the electrical utility company, and uses this reading as the starting base load.

6.16.2 Codes and Standards

The pumping station electrical system designed by the DESIGN CONSULTANT must comply with the requirements of NEC, the City of San Diego Electrical Code, ANSI, UL, NEMA, and IEEE, as applicable.

6.16.3 Electrical Service and Distribution

Distribution (utilization) voltages are 4.16 kV, 480 V, 208 V, and 120 V unless other voltages are specified for special cases. Incoming service voltages are coordinated with the utility company and the Water CIP.

The DESIGN CONSULTANT designs the pumping station power distribution system so that no single fault or loss of preferred power source results in disruption (extended or momentary) of electrical service to more than one motor control center (MCC) associated with vital components. To meet this requirement, the electrical power distribution system incorporates redundant power sources.

Vital components serving the same function are divided as equally as possible between at least two MCCs. Nonvital components are divided in a similar manner.

Incoming power metering can be remotely read via telephone modem.

Outdoor installations are nonwalk in weatherproof enclosures.

During pump startup, the voltage drop at the motor terminals may not exceed 15%. Feeder and branch circuit conductors are sized so that their combined voltage drop does not exceed 5% with a maximum of 3% in either feeder or branch circuit.

Utilization voltage ratings are as follows:

1. Motors:
   Smaller than 3/4 hp, 115 volts, single-phase, 60 Hz
   3/4 hp and larger (up to 300 hp), 460 volts, 3-phase, 60 Hz

2. Miscellaneous nonmotor loads of 0.5 kW and less are single-phase rated at 115 volts, 60 Hz.

3. Nonmotor loads larger than 0.5 kW are rated at 460 volts, 3-phase, 60 Hz, unless this voltage rating is not available for the equipment selected.

4. Lighting:
   Outdoors = High pressure sodium type, 277 or 115 volts, single-phase
   Indoors = Fluorescent, 115 volts, single-phase.

5. General-purpose receptacles are rated 20 amps, 120 volts, single-phase.

6. Special purpose receptacles may be 120, 208, or 480 volts, 3-phase as required.

7. All ac control power circuits are 120 volts, single-phase.

8. Special purpose dc control circuits may be 125 volts, 48 volts, or 24 volts.

9. All instrumentation power supplies are 120 Vac single-phase, 60 Hz.

6.16.4 Electrical Equipment

The DESIGN CONSULTANT sizes electrical equipment to continuously carry all electrical loads without overloading. Equipment and materials are rated to withstand and/or interrupt the available fault currents, with at least a 25% reserve margin for electrical load growth. Electrical power conductors are sized according to the heating characteristics of conductors under fault conditions. Electrical equipment panels are provided with cooling fans.

A. Medium Voltage Motor Controllers

Medium voltage controllers are modular design, vacuum contactor type. Where required by the power supply, or if the voltage dip exceeds the required maximum value, reduced voltage motor starters are used. A reduced voltage motor starter may also be used as a surge protection device for the constant speed pump drives. The motors are started slowly to reduce surges in the pipeline.

Indoor enclosures must be NEMA 12 rated.

All MV starters are furnished with electronic protection modules with communication capability.

B. Variable Frequency Drives

Variable frequency drives (VFDs), where required, are provided with the pump and motor to provide unit responsibility for a system that performs over the required head and flow ranges. The VFDs are used to drive induction motors, and are PWM type.

All VFDs have remote control capabilities via a MODBUS(+) communication interface port.

C. 600-Volt Motor Control Centers

Low voltage motor control center (MCC) assemblies must conform to the UL and ANSI standards for NEMA Class 2, type B wiring.

All breaker handle mechanisms have padlocking devices on the off position.

All indicator lights mounted on the MCC are push-to-test type.

All combination magnetic starters have MCPs and time delay mechanisms to prevent the unit from dropping out during momentary utility voltage dips.

A full-length ground bus must be provided.

D. Switchgear

Switchgear assemblies conform to UL and ANSI standards, and comply with the service requirements of the utility company.

For outdoor applications, the switchgear must be weatherproof NEMA 4, nonwalk-in type.

Busbars are copper, fully insulated and silver-plated at joints. A full-length ground bus must be provided.

6.16.5 Grounding

All feeders have an equipment grounding conductor in the same raceway.

Equipment grounding conductors must be sized in accordance with NEC table 250-95.

6.16.6 Instrument Power

All 120-volt power to instruments and instrument panels is derived from a dedicated instrument power panel from a shielded transformer, not from a general lighting and convenience receptacle panel. Provide separate fuses for each field device.

An uninterruptible power supply (UPS) is provided for all main control panels, RTUs, RIOs, PLCs, and all other process controllers as required for the specified instrumentation and controls.

6.16.7 Emergency Power

A. Emergency Plug-in Connection

In stations without an alternative backup power source (i.e., second service or a dedicated onsite emergency power plant), install a manual transfer switch and an emergency plug-in power connection to the pumping station for use with a portable generator.

The pumping station is also equipped with a manual transfer system that requires the use of an enable key to sequentially open the line power service and then transfer to the emergency power service connection.

The transfer switch has the same current amperage interrupt rating (AIC) as the line power main breaker.

The following warning sign is posted on the manual transfer switch panel:

DO NOT TRANSFER POWER UNDER LOAD

B. Emergency Power Generator

Diesel engine generator units may be installed with special approval from the CIP Project Manager in conjunction with the Water Utilities Operations Division. Need for an emergency power plant is established in the Predesign Report or the BODR.

The preferred fuel tank installation is a frame-mounted fuel tank under the emergency generator unit (surrounded by a spill containment dike) or an aboveground tank installed in an aboveground block-wall enclosure incorporating a confinement dike. An aboveground tank is used where possible. All diesel storage tanks have a desiccant dry-air breather on vents to prevent water condensation in the tank. The fuel tank contains sufficient fuel to sustain a minimum of 24 hours of continuous operation.

The DESIGN CONSULTANT requires that a 1-year standard service contract for the emergency generator be provided by the Construction Contractor.

The pumping station has an interlock-protected emergency power automatic transfer switch (ATS) to automatically start the generator in the event of loss of main power (i.e., phase of power, reverse power, or low voltage brownout). The ATS is mounted in sight of the generator control panel or remote status annunciator panel for ease of operation. The ATS is provided with communication provisions for remote annunciation and control via the local telemetry system.

6.16.8 Lighting

Refer to paragraph 6.16.4 of this chapter for lighting voltages. The state of California Energy Conservation Standards apply where applicable.

Lighting levels are as follows:

Area	Illumination Level
Electrical Equipment Rooms	40 footcandles
Exterior Lighting	0.1-1 footcandle
Pumping Area (dry well)	30 footcandles
Mechanical Equipment Rooms	30 footcandles
Restrooms	30 footcandles

Lighting in pumping stations is switched. The pathway to the main lighting switch is lighted with nonswitched lighting fixtures.

Exterior lighting around unattended pumping stations, is provided with key-operated switching located at the property entrance gate.

Emergency egress lighting in all interior areas of the pumping station is accomplished with units with emergency battery backup packs illuminating the egress path to the outdoors. 90-minute battery backup capacity is provided.

6.16.9 Receptacles

20 amp, NEMA 20-R, 120-volt grounding convenience receptacles for GFI plugs are provided throughout the pumping station facility so that all working areas, can be reached by a 25-foot-long portable cable (extension cord).

One 200-amp, 480-volt, 3-wire, 4-pole twist lock receptacle is provided so that the receptacle can be reached by a 50 foot long cord.

All receptacles in outdoors are in weatherproof enclosures for GFI plugs.

6.16.10 Electrical Equipment Room

The electrical equipment room is separate from the pump room. It is either located in a separate building or be separated from the pump room by a divider wall fitted with a fixed viewing window.

6.17 Architectural Treatment

This section provides a general basis for the approach to architectural design of pumping stations. The following guidelines and criteria are provided to ensure a consistent and thorough design process for each facility. Although the guidelines described in this section apply to pumping stations, the general concepts could be applied to other Water CIP facilities which incorporate pumping stations and other related buildings/structures (e.g., combined reservoir, pumping station facilities).

6.17.1 Design Performance Guidelines

The DESIGN CONSULTANT meets with the CIP Project Manager to establish appearance and physical performance criteria for the facility. Areas of focus include the sizes and configurations of the major functional elements to be housed in the facility, and the deployment and interrelationships of supporting mechanical, electrical, and maintenance provisions. Topics also include:

1. Discover, document, and prioritize functional goals for the facility, including spatial needs and hierarchy of importance, public image, the degree or level of security appropriate to the facility location, functions to be housed, the scope of future expansion and flexibility expected, desired links to other functions on the project site, maintenance guidelines, and HVAC, electrical, lighting, and acoustical criteria. The use of the new facility is discussed and documented in terms of intended conformance with, or departure from, existing employee health and safety policies.

2. Discover and document the degree and type of human interaction anticipated to occur within and around the planned facility, including Water Department personnel and public access to the facility in the form of visits by non-Water Department personnel. These considerations have key relevance in the design of the facility within the context of regulations governing handicap access. The building design resulting from these conversations is affected in areas such as the number and location of emergency exits, fire detection and suppression system, the design of zones of safety, horizontal and vertical clearances, and other personal safety, acoustic and lighting safety provisions.

3. Determine locations and sizes of structures and other functional systems which may already exist at the project site, as well as the availability and types of utility services which may be required. Develop strategies to successfully integrate the design of the new facility into this context.

4. Review the impact of the project on existing drainage patterns. Develop mitigation strategies if necessary.

5. Investigate existing zoning constraints, applicable building codes, and anticipated public and governmental review procedures necessary during the course of the design. Develop strategies and assign responsibilities for their successful negotiation

6. Review and document existing and future planned land uses around the facility site. Determine guidelines for the design and character of the new facility so that it harmonizes as effectively as possible with its visual and social context.

7. Review and incorporate mitigation measures included in environmental documents for the project.

8. The DESIGN CONSULTANT utilizes the minimum criteria for noise control described in Attachment 6-1 of this Chapter 6. Additional or more strict criteria may be established in the environmental approval process. The DESIGN CONSULTANT shall utilize the most conservative criteria established.

6.17.2 Design Appearance Guidelines

As an extension of the discussions in the preceding paragraphs, the DESIGN CONSULTANT and the CIP Project Manager establish criteria for the appearance and physical performance of the structural system and building envelope. The architectural design should be developed in character, style, form, color, and materials to harmonize effectively with its surrounding environment. Suggested design parameters to assist in these aspects of the design of the facility include:

1. **Height of Structures.** The facilities are kept as low in profile as is functionally possible. Where appropriate, the design should de-emphasize verticality and encourage the grounding of planar elements of the facility into the natural landscape. Low, horizontal site walls, berming, and the use of sloping wall planes are to be considered in achieving this balance.

2. **Reflective Finishes.** Visible and highly reflective materials and surface finishes should be avoided on the exterior of the facility.

3. **Exterior Walls.** The use of low maintenance indigenous materials such as masonry and concrete for the exterior walls of the facility is encouraged. The use of surface textures and horizontal banding of harmonious colors are some of the techniques to be considered in blending the facility with its environment. Material coloration should be achieved through the use of integral coloration and, in the case of concrete, pigmented admixtures, rather than applied coloration such as paint, which must be maintained.

4. **Roofs.** Just as with the massing and materials of the exterior walls, the design of roof systems should be carefully developed to harmonize with the visual context of the facility. Where flat roofs are appropriate, they should be predominately hidden by parapet walls. Where pitched roofs are desired, consideration should be given to selecting pitch, materials, and coloration to harmonize with surroundings. Highly reflective roof surfaces must not be visible from adjacent property. Mansard and jogging roof lines should be employed only when appropriate to the setting. The use of securable skylights for natural lighting is encouraged where feasible. Also provide securable skylights or access hatch for ease of equipment removal using a mobile crane.

5. **Windows.** Where windows are appropriate to the design, they should be selected carefully for energy efficiency, acoustic characteristics, and security.

Glazing systems are designed to avoid light leakage to adjacent property as direct glare or reflected glare from sunlight. Glass tinting and window frame colors should be chosen for their consistency with the palette of materials and colors selected for the facility.

6. **Insets, Grills, Trim and Accents.** Insets, grills, trim material, and accents should be employed judiciously and only where necessary or appropriate for compatibility with adjacent structures. Insets, grills, trim, and accents are consistent with the color palette chosen for the facility and should avoid bold, strong, or reflective colors.

7. **Doors and Frames.** Door and frame colors are compatible with the wall surface in which they are located.

8. **Lighting.** Lighting should satisfy functional and security needs while not creating light pollution in the form of point sources of direct glare visible from a distance. Lighting should be sensitive to the privacy of adjacent land uses. Fixtures should be carefully selected for efficiency, cut-off, consistent lamp coloration throughout the project, and effectiveness in delivering only the light necessary to the task, while avoiding unnecessary spill lighting beyond site boundaries. Low-level light fixtures which light immediate areas are encouraged. Natural lighting of the interior of the building in the form of skylights and clerestory windows is also encouraged.

9. **Equipment and Service Areas.** All mechanical and electrical equipment are screened from public view.

10. **Materials - Safety.** Materials used in the construction of the facility conform in composition and application to all applicable regulations, including those concerning volatile organic content, lead, mercury, CFCs, and asbestos.

The Predesign Report contains discussion of site constraints that may affect the design appearance, character, materials, selection, massing and location on the project site. Traditionally established City preferences and guidelines for material and appearance systems, structural systems, and major building envelope systems are discussed and their appropriateness to the specific application assessed. These preferences and guidelines are developed in the context of the specific location of the project site; therefore, not all facility design should be expected to have the same architectural theme and character. Construction materials and methods are established and defined, in terms of their physical appearance and overall visual effect in harmonizing with the surrounding environment, their emergency from the basic structural system, and their appropriateness in accommodating the deployment of mechanical and electrical systems within the facility.

Weathering systems are also defined in terms of the area's desert climate. The roofing system and the building perimeter envelope are established for optimum durability over the full range of climatic variations typical to the region.

These examinations form the basis of directions to the DESIGN CONSULTANT about the appearance of the new building. From these discussions, the DESIGN CONSULTANT develops specific graphic and written statements defining the architectural theme and character

of the new structure, as well as its relationship to other functions on the project site and its harmony with the visual context of surrounding land uses.

6.17.3 Site Constraints

Finally, the DESIGN CONSULTANT reviews the Predesign Report for a discussion of site constraints that may affect the design appearance, character, materials selection, massing, and location on the project site. Views of the facility from areas surrounding the project site are analyzed and alternatives discussed to harmonize the appearance of the facility with its visual context. The DESIGN CONSULTANT ensures that viewsheds are optimized while hydraulic elevations and storm drainage provisions are preserved. Regardless of the visual circumstances, the facility in all cases is located above the 100-year flood elevation.

6.17.4 Space and Function Requirement Program

The DESIGN CONSULTANT documents the topics of discussion and directions established in the facility criteria meeting(s) in a space and function requirements program. This document may be in any form, from a simple memorandum to a bound report, depending on the size and complexity of the project. More significant than its form, the report must thoroughly document the understandings reached in the meeting(s). The document contains a summary establishing gross area and volume requirements, as well as a schematic of the basic functional relationships within the facility. It also completely describes the parameters of appearance, function, size, and layout. As such, the space and function requirements program is a distillation of all the information necessary to allow a competent design to be developed. The Predesign Report serves as the point of beginning for this program.

6.17.5 Program Review and Approval

The DESIGN CONSULTANT submits the space and function requirements program to the CIP Project Manager, who reviews the material thoroughly and comments on any additional items or corrections that may be required. If the program information is found to be a clear, concise and accurate statement of requirements, the CIP Project Manager approves the report.

6.17.6 Building Design

After Water CIP approval, the DESIGN CONSULTANT proceeds with design of the facility. Requirements for basic functional relationships and area and volume requirements are developed and refined into plan, elevation, and section views of two separate design schemes. While schematics, the drawings are accurate to scale and incorporate all major program requirements. The DESIGN CONSULTANT meets with the CIP Project Manager to present both schemes. Each alternative is described in terms of how well it embodies program requirements. Structural systems, building envelope, and major building systems are shown in both schemes. As a part of the DESIGN CONSULTANT'S presentation and description of the schemes, the relative merits, advantages, and potential criticisms of each scheme are discussed. The meeting culminates in a decision by the CIP Project Manager of the selected scheme and any necessary adjustments. Clear directions are given to the DESIGN CONSULTANT on the final course of development to be pursued.

6.17.7 Construction Documents

After the CIP Project Manager's decision, the DESIGN CONSULTANT proceeds to develop the selected scheme into Contract Documents.

6.18 Corrosion Control

The DESIGN CONSULTANT provides appropriate and detailed information in the Contract Documents describing the following requirements:

6.18.1 Protective Coatings and Linings

The term "coatings" refers to materials applied to the external surfaces of various structures (buried, submerged or exposed) for protection against corrosion. The term "linings" describes materials applied to the internal surfaces of pipes, tanks and equipment for corrosion prevention.

The DESIGN CONSULTANT selects appropriate coatings and linings, taking into account the service environment, ability of the coatings and linings to resist aging and maintain adhesion to the structure's surface, ability to be applied with minimal defects, ability to withstand normal handling and storage, reparability, cost, and availability.

Usually underground piping at pumping stations is not cathodically protected due to difficulties in electrical separation of the piping from other structures which normally do not have cathodic protection (electrical grounding systems, underground ducts, conduit, reinforced concrete structures, etc.). At structures where adjacent transmission/distribution pipe is cathodically protected, the pump station must be made electrically discontinuous from the adjacent piping with the use of flange or coupling insulation kits. The coatings for buried piping at structures shall be in accordance with Chapter 7 of this Book 2. Concrete embedded or cement-mortar coated pipes should be equipped with test stations and corrosion coupons for monitoring corrosion conditions of the pipes. The application of loose polyethylene wrappings for ductile iron pipes is not recommended.

Steel surfaces immersed in water (surge tank internals, for example) have appropriate linings or coatings which, in addition to general requirements are resistant to cathodic disbondment, since these surfaces require cathodic protection.

Coatings for steel surfaces exposed to atmosphere are aliphatic acrylic polyurethane coated.

More detailed information on coating and linings, including generic types of coatings and linings, their application and relevant standards is found in Book 2, Chapter 7, Telemetry/Control.

6.18.2 Materials Considerations

A vast variety of metallic and nonmetallic materials are normally used at pumping stations. Carbon steel, ductile iron, PVC, FRP, and concrete are in underground structures. Stainless steel is often used in contact with water as parts of valves, pumps, sluice gates, etc. Bronze is used for valve stems, pump impellers and shafts.

The DESIGN CONSULTANT thoroughly investigates the corrosion potential of soil, water, and atmospheric conditions at the pumping station site before selecting materials of construction for piping, tanks and equipment.

Recommendations on materials selection for soil, water, and atmospheric exposures can be found in Book 2, Chapter 7, Telemetry/Controls.

6.18.3 Cathodic Protection

Normally, cathodic protection at pumping stations is applied to surge tank internals (impressed current type) and some items immersed in water, such as sluice gates, valves, etc. (galvanic anode type).

Detailed requirements for the successful application of cathodic protection under various environmental conditions, the evaluation of cathodic protection needs and testing procedures are described in Book 1, Chapter 9, Corrosion Control.

6.19 Noise Control

6.19.1 General

The noise design guidelines outlined in Attachment 6-1 define the minimum technical requirements to be used by the DESIGN CONSULTANT for the design, material and equipment selection, construction, startup operations and maintenance considerations to control noise from individual pieces of equipment or individual units within the pumping station, at the facility boundary and in the community. Any deviations from the requirements of these noise Guidelines must be completely justified and explicitly requested by the DESIGN CONSULTANT. CIP Project Manager approval of all such deviations is required.

6.19.2 Design Phase

Facility compliance with these noise Guidelines must begin during preparation of the BODR. Paragraphs 2 and 4 of Appendix 6-1 address noise control for the design phase.

A. General Facility Design

The DESIGN CONSULTANT prepares facility designs that result in an operating pumping station in compliance with all local, state and federal noise regulations. Compliance is ensured through the submittal of BODR plans and specifications to the CIP Project Manager for review and approval. Facility noise predictions are developed during the engineering design phase to predict the pumping station noise levels (at personnel frequented locations), facility boundary line noise levels, and (where appropriate) community noise levels. The sound pressure levels of completed facilities during their operation are guaranteed by the DESIGN CONSULTANT to be within permissible limits of these Guidelines, including a pump station at facility boundary and community sound pressure levels due to facility operations. Locations where noise level limits cannot feasibly be met are identified by the DESIGN CONSULTANT and brought to the attention of the CIP Project Manager.

B. General Equipment Design

Noise generated by equipment, piping, prime movers and other noise sources is determined and noise information updated during the design period. Updated noise data is incorporated into the facility noise model and properly evaluated by the DESIGN CONSULTANT to avoid the need for corrective noise attenuation measures after completion of facility construction.

6.19.3 Preconstruction Phase

The DESIGN CONSULTANT conducts an ambient noise survey during project design so that existing noise levels within the planned facility boundaries, at facility boundary lines and, where appropriate, in the community can be considered and incorporated into the design of the facility. The ambient noise survey is discussed in paragraph 5 of Appendix 6-1 and shall be conducted in accordance with the methods described in Paragraphs 7.4 and 7.5 of Appendix 6-1. Ambient noise measurements are made at the same locations approved by CIP Project Manager and modeled in the design phase.

6.19.4 Maintenance Considerations

The DESIGN CONSULTANT takes care in preparing the design, specification and implementation of noise control measures and devices so that maintenance and safety issues are adequately considered. Maintenance and safety issues are discussed in paragraph 8 of Appendix 6-1.

6.20 Pumping Station Operational Testing Facility Acceptance

The DESIGN CONSULTANT provides appropriate information in the Contract Documents to describe the following requirements:

6.20.1 Operational Test Procedures

The DESIGN CONSULTANT prepares a schedule of operational tests to be witnessed by the City and Construction Manager that demonstrate the proper operation of all equipment at the station. The Construction Contractor is required to demonstrate the operation of all pump station mechanical equipment, electrical controls, emergency power operations and warning displays. Simulated failure conditions are initiated by the Construction Contractor as required to demonstrate warning displays.

6.20.2 Contractor Testing and Equipment Certifications

The DESIGN CONSULTANT prepares specifications that require the Construction Contractor to test and adjust all equipment to ensure proper operation after all construction is completed. The specifications require that the Construction Contractor obtain the following motor and pump test data and equipment installation certification and provide it to the Construction Manager during operational testing.

A. Installed Equipment Certification

The DESIGN CONSULTANT prepares specifications that require the Construction Contractor to submit to the Construction Manager, within 14 calendar days of installation, a letter from each major equipment supplier certifying that the equipment installed at the pumping station was installed and tested to manufacturer's recommendations.

The certifications from the Construction Contractor (and/or its equipment suppliers and subcontractors) certifies that major equipment was installed, tested and is operating to manufacturer's recommendations. Certifications are provided for the following major equipment in the station: pumps and motors, power check valves, emergency generator units, automatic transfer switches, diesel fuel tanks and day tanks, motor control centers, pump control panels, telemetry panels, flow meters, and pressure switches/transducers.

B. Factory Testing Report Pump Motors

The DESIGN CONSULTANT prepares a specification requiring the Construction Contractor to have the pump motor manufacturer/supplier submit certified factory test information for the supplied units: motor heat run and efficiency test curves.

C. Factory Testing Report - Pump Unit(s)

Certified pump test curves recording the actual performance of installed equipment are prepared for each pump at the Construction Contractor's expense (in accordance with Hydraulic Institute Society test requirements). The test information also includes the following: TDH/GPM, motor current draw, motor RPM, and overall efficiency.

D. Vibration Analysis Report

The Construction Contractor is required to provide a vibration analysis test report for the installed pumping and emergency generation equipment. This analysis and report is prepared by a state of California Registered Professional Mechanical Engineer experienced in this type of work.

Attachment 6-1
Pumping Station Noise Control Guidelines

1. SCOPE

The Guidelines define the minimum technical requirements to be used for design, material and equipment selection, construction, startup operations and maintenance considerations to control noise from individual pieces of equipment or individual units within the facility, at the facility boundary and in the community. Any deviations from the requirements of this noise Guideline must be completely justified and explicitly requested and approvals obtained from the appropriate the Water Department staff.

2. REFERENCES

2.1 Noise Regulations

This Guideline includes references to the following noise regulations:

1. California Administrative Code, Title 8, Group 15, Article 105, "Control of Noise Exposure."
2. County of San Diego Code of Regulatory Ordinances, Chapter 4, Sections 36.401-36.443, "Noise Abatement and Control."
3. City of San Diego Municipal Code, Chapter 59, Article 9.5, "Noise Abatement and Control."

2.2 Noise Standards

This Guideline contains references to the following noise standards:

1. American National Standards Institute (ANSI)

   S1.4, Specification for Sound Level Meters
2. American National Standards Institute (ANSI)

   S1.11, Specification for Octave Band and Fractional-Octave Band Analog and Digital Filters
3. American National Standards Institute (ANSI)

   S1.13, Measurement of Sound Pressure Levels in Air
4. American National Standards Institute (ANSI)
5. S1.25, Specification for Personal Noise Dosimeters
6. American National Standards Institute (ANSI)

   S1.40, Specifications for Acoustical Calibrators

3. GENERAL

3.1 Definitions

1. Noise - unwanted sound.
2. Sound pressure - small oscillatory pressure variations above and below ambient atmospheric pressure that produce the auditory sensation of sound (in N/m^2, where 1 $Newton/meter^2$ = 1 pascal [Pa]).
3. Sound pressure level - 20 times the common logarithm of the ratio of measured sound pressure over the reference sound pressure, expressed mathematically in decibels (dB), as follows:

$$\text{Sound pressure level (dB)} = 20\ LOG_{10} \left[\frac{\text{Measured Sound Pressure}}{\text{Reference Sound Pressure}} \right]$$

   where the reference sound pressure = 20 micropascal (20 μPa).
4. A-weighting - an acoustic frequency adjustment to a sound pressure level which simulates the sensitivity of human hearing. An A-weighted sound pressure level (dBA) results from either manually or electronically applying the frequency dependent A-weighting factors.
5. Noise level, sound level or overall sound level - the single number A-weighted sound pressure level as read on a sound level meter set to A-weighting. This level is also the energy sum of the A-weighted sound pressure level spectrum.
6. Overall sound pressure level - the single number unweighted sound pressure level as read on a sound level meter set to linear. This level is also the energy sum of the sound pressure level spectrum.
7. L_{eq} - the equivalent continuous sound level or energy average sound level over a set period of time (usually one hour).
8. TWA - the 8-hour time-weighted averaged occupational noise exposure level.
9. Octave band - the interval between two frequencies having a ratio of 2 to 1.

4. DESIGN PHASE

4.1 General Facility Design

1. The DESIGN CONSULTANT prepares facility designs that result in operating facilities that comply with all local, state and federal noise regulations. Compliance is ensured through the submittal of plans, specifications and quarterly summary reports for review and approval. The sound pressure levels of completed facilities during their operation are guaranteed by the DESIGN CONSULTANT to be within permissible limits of this Guideline, including in-facility, facility boundary and community sound pressure levels due to facility operations. Locations where the noise level limits cannot feasibly be met are identified and brought to the attention of the CIP Project Manager.

4.1.2 Facility Noise Modeling

Facility noise predictions are developed during the engineering design phase to predict the in-facility noise levels (at personnel frequented locations and work stations), facility boundary line noise levels, and (where appropriate) community noise levels.

1. For small facilities with only a few (<10) potentially noisy items of equipment, simple spreadsheet-type calculations may be used to predict the composite facility generated noise.
2. For larger facilities with several (10 or more) items of potentially noisy equipment, a facility noise computer model is used to calculate the composite facility generated noise.
3. Noise modeling formulas and software are based on industry accepted practices for source noise prediction, noise propagation and noise attenuation analysis.
4. Equipment Noise Data
   a. For potentially noisy equipment, either the octave band sound pressure levels at a specific distance from the noise source (usually one meter for smaller items and at least one major equipment dimension away for larger equipment) or the octave band sound power levels are obtained and carefully reviewed by the DESIGN CONSULTANT. Both the overall level (dBA) and octave band levels for the preferred octave band frequencies of 31.5, 63, 125, 250, 500, 1000, 2000, 4000, and 8000 Hz are determined for each piece of potentially noisy equipment. This information is to be estimated during the preliminary engineering phase and updated throughout the detailed design phase, as equipment selection becomes more definite.
   b. Plan and elevation coordinates are identified for each item of potentially noisy equipment and used as source locations in the noise model.
   c. Plan and elevation coordinates are identified for each sensitive receptor location and used as receiver locations in the noise model.
5. Where individual pieces of equipment meet a specified noise level limit but are to be located near other noisy equipment, the combined sound pressures are additive. In this case, individual equipment noise level limits must be reduced sufficiently to achieve the employee location noise limit (e.g., 85 dBA TWA for 8-hour exposure).
6. Noise model verification is undertaken by the DESIGN CONSULTANT to ensure that modeled distance versus noise attenuation between facility noise sources and community receiver locations, atmospheric absorption attenuation with distance, noise barrier attenuation and any other excess attenuation factors are consistent with published acoustical data and that the model is calibrated to accurately account for noise level differences at the noise sources, at the facility property lines and at the community sensitive receptor locations.
7. Facility noise levels are predicted and used when addressing the following considerations relevant to facility design:

a. The technical and economic feasibility of selecting low noise equipment designs and their effect on in-facility, facility boundary line and community noise levels.

b. Any requirement for additional noise abatement measures to comply with regulated and noise limits.

c. Locations of in-facility areas that cannot be designed with adequate feasible noise controls and therefore must be designated as high noise areas requiring the use of personal hearing protection and/or noise shelters.

d. The number of employees potentially affected by excessive noise exposure, without and with the implementation of noise controls.

e. The management of employee tasks so that their TWA noise exposure is deemed acceptable by Cal-OSHA.

f. The influence of noise controls on facility operation and maintenance.

4.1.3 In-Facility Non-Industrial Area Noise Planning

1. The DESIGN CONSULTANT designs interior work spaces so that the noise from internal systems and exterior facility noise does not exceed the nonindustrial work area noise limits on Table 1 of this appendix. Architectural acoustic treatments to interior walls, floors, ceilings and special window treatments are considered. In addition, appropriate acoustical and vibration isolation of internal building noise and vibration sources are considered by the DESIGN CONSULTANTS.

4.1.4 In-Facility Occupational Noise Exposure Planning

1. The DESIGN CONSULTANT, in consultation with the Water Department staff, estimates operator and maintenance personnel work locations. They also estimate the normal and worst-case durations at the estimated work locations.

2. The DESIGN CONSULTANT determines area noise levels for all employee frequented areas and occupied locations that might contribute to the TWA noise exposure of personnel.

3. Facility employee TWA noise exposures are predicted by DESIGN CONSULTANT for three conditions:

   a. Facility design with standard equipment.

   b. Conservative facility design featuring quiet equipment or equipment with noise control options to achieve a maximum combined equipment noise level of 85 dBA at or beyond a distance of 1 meter (3 feet) from any equipment surface.

   c. Optimized facility design with equipment only having sufficient design noise controls to achieve the state-mandated employee TWA noise exposure compliance. This is more a function of employee position and duration than limiting equipment noise levels. It may require an iterative computational process and may allow higher equipment noise levels. The most recent version of the Cal-OSHA requirements govern in all cases of occupational noise exposure computation.

4. The DESIGN CONSULTANT compares the predicted number of employees with excessive TWA noise exposures for this three-part noise exposure analysis and submits the findings to the CIP Project Manager for review and comment.

4.1.5 Boundary Line and Community Noise Planning

Sound levels at or beyond facility boundary lines conform to the noise limits of Table 2 or Table 3 of this appendix, depending on the facility proximity to City and County land use. The noise limits of the most recent codes of the City and/or County of San Diego govern their respective land use jurisdictions.

1. Areas in which the sound is expected to be tonal require the allowable overall sound level limit for that area to be reduced by 5 dBA. A tonal sound is one where the sound in a narrow band (1 octave or less wide) is more than 5 dB higher than the level in both of the adjacent side bands.
2. For facility design noise control, the following strategic order of priority is used:
   a. When practical, noisy equipment is located in more remote areas of the unit or facility, where personnel and community noise exposure is reduced due to distance.
   b. Where feasible, equipment that conforms to the noise limits described in this Guideline without add-on external acoustical enclosures, silencers, lagging, etc., is selected.
   c. Equipment that can be externally treated with acoustical enclosures, silencers, lagging, etc., is selected.
3. Noise attenuation treatments or controls, in addition to those furnished by equipment suppliers, are provided to ensure that the completed project equipment, operating individually, collectively, or in groups, conforms to the noise limits of this Guideline.
4. A noise compliance summary report that includes equipment type, manufacturer, operating characteristics, location and predicted noise levels is submitted quarterly to CIP Project Manager. The first summary report is developed early during the preliminary engineering phase and includes the most recent available data. This preliminary data is updated periodically during the engineering design phase until the final design data is firm. Calculations or computer model input data used to predict sound pressure levels at the facility boundary lines and in the community is included in the quarterly summary reports.
5. Design information is submitted to potential equipment suppliers, including a copy of this noise Guideline and applicable sound pressure level limits. An equipment noise data sheet is also provided the bidding equipment suppliers. The noise data sheet indicates the free-field noise level limit at a specified distance, as determined by the DESIGN CONSULTANT, provides space for the bidder to list its guaranteed specified distance equipment noise levels (overall A-weighted and octave band sound pressure levels) and the associated noise control costs for:
   a. Standard equipment package
   b. Optional “quiet design” version of equipment

c. Equipment with supplier add-on noise controls (acoustical enclosures, upgraded silencers, etc.)

6. Equipment noise data sheets must be completed by bidding equipment suppliers for each type of potentially noisy equipment and returned with their bids.

4.2 General Equipment Design

1. Noise generated by equipment, piping, prime movers and other noise sources is determined and noise information upgraded during the project design. Updated noise data is incorporated into the facility noise model and properly evaluated to avoid the need for corrective measures to attenuate noise after completion of facility construction.

2. Standard designs that do not conform to the requirements of this Guideline may be brought into compliance by a combination of:

   a. Replacement with "quiet" designs
   b. Use of acoustical enclosures
   c. Use of acoustical (or thermal) lagging
   d. Use of upgraded silencers
   e. Use of other appropriate noise control methods.

3. The design of acoustical controls is considered with and conforms to thermal design requirements.

4.3 Equipment Purchase

1. Individual pieces of equipment conform to guaranteed noise limits provided on noise data sheets.

2. Where individual pieces of equipment meet a specified noise level limit but are to be located near other noisy equipment, the combined sound pressures are additive. In this case, individual equipment noise level limits are reduced sufficiently to achieve the desired location noise limit (e.g., 85 dBA).

3. If sound pressure levels and measurement positions are different from the standard conditions normally shown on the noise data sheet, such information is specified by the bidder.

4. Where relevant, the following information is provided to bidding equipment suppliers:

   a. Site conditions, including prevailing wind speeds and directions, size and locations of existing buildings, and size and locations of groves of trees, walls and other visual barriers.

   b. Frequented locations of operating and maintenance personnel.

   c. Other structures and adjacent equipment that may affect the operating sound pressure level of Supplier's equipment.

5. If a supplier's optional noise controls, which could be built into its equipment, would generate excessive costs, the DESIGN CONSULTANT notifies CIP staff and they jointly determine which is more economical and practical:

   a. Acceptance of the equipment with the optional built-in noise control measures, or

   b. Selecting add-on noise attenuation treatments (enclosures, silencers, lagging, etc.) external to equipment.

5. PRECONSTRUCTION PHASE

5.1 Ambient Noise Survey

1. A noise survey is conducted during project design so that existing noise levels within the planned facility boundaries, at facility boundary lines and, where appropriate, within the community can be considered and incorporated into the design of the facility. The ambient noise survey is conducted in accordance with the methods in subsections 7.4 and 7.5 of this appendix. Ambient noise measurements are made at the same locations approved by CIP staff and modeled in the design phase.

2. All instrumentation is calibrated before each series of measurements in accordance with ANSI S1.40 and has valid annual calibration certification. Sound measurement instrumentation must conform to the ANSI S1.4, S1.11 and S1.13 standards.

3. The preconstruction baseline noise survey is conducted by a qualified DESIGN CONSULTANT member or a CIP Project Manager-approved acoustical consultant.

6. CONSTRUCTION PHASE

6.1 Inspections

The construction phase include DESIGN CONSULTANT or approved acoustical consultant quality control monitoring and inspections to ensure that design noise control principals and practices are carefully followed and that noise controls are properly implemented by the respective contractors and subcontractors.

6.2 Construction Noise Monitoring

1. The Contractor plans, oversees or undertakes all construction activities so as to comply with the applicable noise regulations. Construction noise is monitored during the construction phase so that construction noise within the community does not exceed the limits of this Guideline. Construction noise monitoring is conducted in accordance with the methods in subsections 7.4 and 7.5 of this noise design Guideline.

2. Construction noise monitoring is conducted by a qualified member of the Contractor's team or an acoustical consultant approved by the CIP Construction Manager.

3. The Contractor keeps noise monitoring logs, along with notations of construction activities and times during the noise measurements, which are available for periodic inspection by the CIP Construction Manager.

7. POST-CONSTRUCTION OPERATIONAL COMPLIANCE CONFIRMATION

7.1 Compliance Confirmation

1. An operating facility noise survey, consisting of in-facility noise measurements, facility boundary line noise measurements and, where appropriate, community location noise measurements, is conducted following facility startup.
2. A written report detailing the results of the noise surveys and any needed corrective measures is submitted to CIP Construction Manager.
3. Corrective actions are provided by the DESIGN CONSULTANT or an approved acoustical consultant to bring project site into compliance with this noise Guideline.

7.2 Noise Survey After Facility Startup - General

1. During the operating facility noise survey conducted after startup, the facility equipment is in normal operation mode with the highest practical load condition up to a full rated load.
2. The survey is conducted by a qualified, approved acoustical consultant, preferably the same person(s) who conducted the preconstruction noise survey.
3. The survey is performed to demonstrate that the completed facility's equipment, operating individually, in groups, or collectively, conform to the in-facility, facility boundary line and community location requirements of this noise Guideline.
4. If a particular piece of equipment does not meet its guaranteed noise specification limit, as submitted on its noise data sheet, a noise test is required of the equipment supplier and appropriate corrective actions or noise mitigation measures taken at the supplier's expense.
5. To the extent possible, ANSI S1.13 standards of noise measurement apply.

7.3 In-Facility Noise Surveys

A facility nonindustrial area noise survey, a facility equipment noise survey and an employee noise exposure survey are conducted by the DESIGN CONSULTANT or approved acoustical consultant after facility startup.

7.3.1 Facility NonIndustrial Area Noise Survey

The facility nonindustrial area noise survey measures sound pressure levels for at least 15 minutes at several locations in each of the room or location not classified as industrial, such as those typified in Table 1. The noise measurements are taken during a period when the area is not occupied or visited by facility personnel. The results of the area noise survey are compared with the area noise limits on Table 1 and included in the operational facility noise report.

7.3.2 Equipment Noise Survey

The in-facility equipment noise survey measures sound pressure levels as follows:

1. Sound readings are to be taken 1 meter (3 feet) horizontally in all four directions from major equipment surfaces and at a distance of 1.5 meters (5 feet) above the ground, platform, or floor level.
2. If the equipment has a highly directional sound field (i.e., a stronger sound radiation in one or more directions), readings are taken at several locations (all 1 meter [3 feet] from the piece of equipment) to establish the directivity pattern of the noise source.
3. Working areas above, below, or adjacent to equipment normally occupied or frequented by personnel, such as platforms, are measured.
4. Sound readings are taken in control rooms and offices at normal work stations.
5. All sound pressure level readings include the overall sound level in dBA and the octave band sound pressure levels at the nine preferred octave band frequencies of 31.5, 63, 125, 250, 500, 1000, 2000, 4000, and 8000 Hz. All instrumentation is calibrated just before each series of measurements in accordance with ANSI S1.40 and has valid annual calibration certification. Sound measurement instrumentation must conform to the ANSI S1.4, S1.11 and S1.13 standards.

7.3.3 Employee Noise Exposure Survey

1. On two consecutive workdays during the operating facility noise survey conducted after startup, the DESIGN CONSULTANT or approved acoustical consultant equips each facility employee exposed directly to facility industrial equipment noise with an audiometric dosimeter that complies with the most recent ANSI S1.25 requirements for monitoring occupational noise exposure.
2. Before receiving an installed dosimeter, employees are instructed in the purpose of the survey and the proper wearing of a dosimeter, and are asked to cooperate in the compliance survey by avoiding unnecessary noise producing activities, including shouting, whistling, hitting or bumping the microphone.
3. The employee noise exposure survey is conducted by an acoustical consultant or a certified industrial hygienist, each of which must have prior experience in performing this type of survey.

7.4 Facility Boundary Line Survey

1. The facility boundary line survey measures the overall sound level (dBA) and the nine preferred octave band sound pressure levels at the same boundary line locations approved and modeled in the design phase, including the locations used in the preconstruction noise survey. Include any additional locations which may have become important since the design phase noise modeling and preconstruction noise survey. All instrumentation is calibrated just before each series of measurements in accordance with ANSI S1.40 and has valid annual calibration certification. Sound measurement instrumentation conforms to the ANSI S1.4, S1.11 and S1.13 standards.

2. Hourly average, maximum, L_{10}, L_{50} and L_{90} noise readings are taken for at least a 24-hour period and at least one full day removed from any holiday or weekend day.
3. If highly directional noise sources are present, additional boundary line readings are taken to establish the directional noise pattern.

7.5 Community Noise Survey

If residences are within 150 meters (500 feet) of any facility boundary line, readings similar to those required under section 7.4 of this appendix are taken at nearby representative residential locations.

7.6 Reporting Noise Survey Results

The DESIGN CONSULTANT or approved acoustical consultant prepares and submits an operational facility noise report summarizing the following:

1. In-facility results including the nonindustrial area and industrial equipment noise survey results and the employee noise exposure results.
2. Facility boundary line noise survey results.
3. Community locations noise survey results.

Any noncompliance with the requirements of this Guideline is highlighted along with recommended measures to achieve full compliance.

8. MAINTENANCE CONSIDERATIONS

Care is given to the design, specification and implementation of noise control measures and devices so that maintenance and safety issues are adequately considered.

8.1 Maintenance Issues

Ease of maintenance and housekeeping is considered by the DESIGN CONSULTANT in locating noise control systems and acoustically treated equipment within the facilities.

Ease of removal and reinstallation of noise control systems is given a high priority by the DESIGN CONSULTANT in the design and selection process so that equipment maintenance can be performed with minimal difficulty and the noise control systems remain effective over time.

Thermal issues are duly considered by the DESIGN CONSULTANT to avoid operational difficulties and equipment temperature problems where noise control systems are used.

Robust noise control systems, with long life expectancies, are investigated to reduce untimely replacement costs.

Table 1
Noise Level Limits for Nonindustrial Facility Work Areas

NonIndustrial Facility Work Area[1]	L_{eq}(15 min) Sound Level, dBA
Warehouses	65
Control Rooms	60
Open Offices	55
Laboratories	50
Administrative Areas:	
- Receptionist, General Secretarial	50
- Conference Rooms, Private Offices	45

1. Noise limits apply to work space while unoccupied but with normal ventilation and exterior noises.

Table 2
City of San Diego
Sound Level Limits at or Beyond Facility Boundary Lines

	Receptor Land Use Zone[1]	L_{eq}(1h) Sound Level[2], dBA 7am-7pm	7pm-10pm	10pm-7am
1.	Residential: - All R-1	50	45	40
2.	Residential: - All R-2	55	50	45
3.	Residential: - R-3, R-4 and all other Residential	60	55	50
4.	All Commercial:	65	60	60
5.	Manufacturing, Industrial, Agricultural, Extractive Industry	75	75	75
6.	All Residential Zones due to Facility Construction (Note 1 does not apply)	75	no const. allowed	no const. allowed

1. The sound level limits at a location on a boundary between two zoning districts is the arithmetic mean of the respective limits for the two districts.
2. The requirements of more restrictive City codes apply.

Table 3
County of San Diego
Sound Level Limits at or Beyond Facility Boundary Lines

	Receptor Land Use Zone[1]	$L_{eq}(1h)$ Sound Level[2], dBA 7am-10pm	10pm-7am
1.	Residential density less than 11 dwellings: R-S, R-D, R-R, R-MH, A-70, A-72, S-80, S-81, S-87, S-88, S-90, S-92, R-V, and R-U	50	45
2.	Residential density equal to or greater than 11 dwellings: R-RO, R-C, R-M, C-30, S-86	55	50
3.	S-94 and all other Commercial:	60	55
4.	M-50, M-52, M-54	70	70
5.	S-82, M-58, and all other Industrial	75	75
6.	All Residential Zones due to Facility Construction. (Note 1 does not apply)	75	no const. allowed

1. The sound level limits at a location on a boundary between two zoning districts is the arithmetic mean of the respective limits for the two districts.
2. The requirements of more restrictive County codes apply.

REVISIONS	NO	DATE	BY	CK	APP	DESCRIPTION	REVISIONS	NO	DATE	BY	CK	APP	DESCRIPTION

1. Client: _____ Site: _____
Equip. Type: _____ Service: _____
Equip. Item No. _____ No. Required: _____

2. Manufacturer: _____ Model: _____ Style: _____
Size: _____ RPM: _____ HP: _____ Driver: _____

3. **NOISE DATA SOURCE:**
☐ Noise Measurement Tests (check all that apply):
☐ Loaded ☐ Identical Equipment
☐ Unloaded ☐ Similar Equipment
☐ Noise Calculation (Attach) ☐ Catalog Data

NOISE MEASUREMENT CONDITIONS:
☐ Free Field Describe: _____
☐ Reverberant
☐ Semi-reverberant
☐ Other Describe: _____

4. **NOISE LEVELS**

OCTAVE BAND CENTER FREQ [Hz]	A Equipment Noise Level Allotment Maximum RMS Lp at__1_meter(s)	B-1 Maximum RMS Sound Pressure Level (Lp) in dB re: 20 μPa at __1___ meter(s) Standard Equipment	B-2 With Special Design	B-3 Added Acoustic Treatment	C-1 Maximum Sound Power Level (Lw) in dB re: 1 picowatt (10⁻¹² watt) Standard Equipment	C-2 With Special Design	C-3 Added Acoustic Treatment	OBCF [Hz]
31.5								31.5
63								63
125								125
250								250
500								500
1000								1000
2000								2000
4000								4000
8000								8000
Overall dB(Lin)								dB(Lin)
Overall dB(A)								dB(A)

5. Brief description of Special "Noise Control" Design and/or Added Acoustical Treatment : _____
Special Design: _____
Added Acoustical Treatment: _____
Any Other Means: _____

6. Additional cost(s) for Special Design and/or Added Acoustical Treatment(s), respectively, as bid.
Special Design: _____
Added Acoustical Treatment: _____
Any Other Costs: _____

7. Special equipment noise characteristics (tonal pitch, directional, impulsive, etc.) : _____

8. Sound Pressure Levels (Lp) are to be measured per ANSI-S1.13 - "Measurement of Sound Pressure Levels in Air" and recorded on Sheet 2, along with equipment sketch and test locations. If a different method and/or if catalog data are used, describe and fully reference: _____

9. Notes, Comments and/or Exceptions: _____

10. Noise Emission Guarantee:
We guarantee that the noise emission from an operating unit of the above equipment, as bid, will not exceed the overall A-weighted sound level or the linear octave band levels stated under Column 4-A, at the specified distance.

Signature: _____ Date: _____

INSTRUCTIONS:
1. Buyer fills in Sections 1 and 4-A.
2. Bidder fills in Secs. 2, 3, 4-B, 4-C, and Sections 5-10, plus Sheet 2 if tested.

EQUIPMENT NOISE DATA SHEET

SHEET	OF	JOB NUMBER
1	2	
DOCUMENT NUMBER		REV

SKETCH OF TEST EQUIPMENT LAYOUT AND NOISE MEASUREMENT LOCATIONS:

NOTE: Noise measurement distances are from the nearest major equipment surface.

OCTAVE BAND CENTER FREQUENCY [Hz]	RMS SOUND PRESSURE LEVEL (Lp) AT NOTED MEASUREMENT LOCATIONS, dB re: 20 µPa								Maximum RMS Lp* per Octave Band (Transfer to Sheet 1-Col. B)
	Location 1 at____meters	Location 2 at____meters	Location 3 at____meters	Location 4 at____meters	Location 5 at____meters	Location 6 at____meters	Location 7 at____meters	Location 8 at____meters	
31.5									
63									
125									
250									
500									
1000									
2000									
4000									
8000									
OVERALL dB (LIN)									
OVERALL dBA									

* Maximum octave band sound pressure level (Lp) for all locations.

REFERENCES AND COMMENTS:

INSTRUCTIONS: Bidder sketches equipment and noise measurement locations, then fills in noise data under location columns and Sheet 1-Col. B.	EQUIPMENT NOISE TEST DATA SHEET	SHEET 2 OF 2	JOB NUMBER
		DOCUMENT NUMBER	REV

PES-N&V-02-MH(7/98)

REVISIONS	NO	DATE	BY	CK	APP	DESCRIPTION	REVISIONS	NO	DATE	BY	CK	APP	DESCRIPTION

1. Client: **CITY OF SAN DIEGO WATER DEPARTMENT** Site: **North Side Pump Station**
Equip. Type: **Centrifugal pump** Service: **Potable water distribution**
Equip. Item No. **SD-CP-07A/B/C/D** No. Required: **4**

2. Manufacturer: **XYZ Pump Company** Model: **KX-500-1800** Style: **Centrifugal**
Size: **3500 gpm** RPM: **1800** HP: **500** Driver: **TEFC Motor**

3. **NOISE DATA SOURCE:**
☐ Noise Measurement Tests (check all that apply):
☐ Loaded ☐ Identical Equipment
☐ Unloaded ☐ Similar Equipment
☐ Noise Calculation (Attach) ☒ Catalog Data

NOISE MEASUREMENT CONDITIONS:
☐ Free Field Describe:
☐ Reverberant
☒ Semi-reverberant
☐ Other Describe:

4. **NOISE LEVELS**

OCTAVE BAND CENTER FREQ [Hz]	A Equipment Noise Level Allotment: Maximum RMS Lp at 1 meter(s)	B-1 Maximum RMS Sound Pressure Level (Lp) in dB re: 20 μPa at 1 meter(s): Standard Equipment	B-2 With Special Design	B-3 Added Acoustic Treatment	C-1 Maximum Sound Power Level (Lw) in dB re: 1 picowatt (10^{-12} watt): Standard Equipment	C-2 With Special Design	C-3 Added Acoustic Treatment	OBCF [Hz]
31.5	93	84	81	88				31.5
63	91	86	84	87				63
125	89	88	85	86				125
250	85	90	86	85				250
500	79	87	84	80				500
1000	74	88	81	74				1000
2000	70	86	79	71				2000
4000	67	82	76	67				4000
8000	67	80	70	65				8000
Overall dB(Lin)	97	96	92	93				dB(Lin)
Overall dB(A)	82	93	87	82				dB(A)

5. Brief description of Special "Noise Control" Design and/or Added Acoustical Treatment :
Special Design: **Quiet casing and coupling design**
Added Acoustical Treatment: **Inlet and discharge pipe lagging to headers**
Any Other Means:

6. Additional cost(s) for Special Design and/or Added Acoustical Treatment(s), respectively, as bid.
Special Design: **$650 per unit**
Added Acoustical Treatment: **$225 per unit**
Any Other Costs:

7. Special equipment noise characteristics (tonal pitch, directional, impulsive, etc.) :

8. Sound Pressure Levels (Lp) are to be measured per ANSI-S1.13 - "Measurement of Sound Pressure Levels in Air" and recorded on Sheet 2, along with equipment sketch and test locations. If a different method and/or if catalog data are used, describe and fully reference:
Pump Catalog with documented noise data - Catalog No. P9602

9. Notes, Comments and/or Exceptions:

10. Noise Emission Guarantee:
We guarantee that the noise emission from an operating unit of the above equipment, as bid, will not exceed the overall A-weighted sound level or the linear octave band levels stated under Column 4-A, at the specified distance.

Signature: *W. E. Agree* Date: **7/15/98**

INSTRUCTIONS:
1. Buyer fills in Sections 1 and 4-A.
2. Bidder fills in Secs. 2, 3, 4-B, 4-C, and Sections 5-10, plus Sheet 2 if tested.

EXAMPLE NOISE DATA SHEET

SHEET	OF	JOB NUMBER
1	2	112233-90000

DOCUMENT NUMBER	REV
SD-NSPS-00-ME-10	0

PES-N&V-01-MH(7/98)

REVISIONS	NO	DATE	BY	CK	APP	DESCRIPTION	REVISIONS	NO	DATE	BY	CK	APP	DESCRIPTION

1. Client: **CITY OF SAN DIEGO WATER DEPARTMENT** Site: **North Side Pump Station**
Equip. Type: **Centrifugal pump** Service: **Potable water distribution**
Equip. Item No. **SD-CP-07A/B/C/D** No. Required: **4**

2. Manufacturer: **XYZ Pump Company** Model: **KX-500-1800** Style: **Centrifugal**
Size: **3500 gpm** RPM: **1800** HP: **500** Driver: **TEFC Motor**

3. **NOISE DATA SOURCE:**
☐ Noise Measurement Tests (check all that apply):
☐ Loaded ☐ Identical Equipment
☐ Unloaded ☐ Similar Equipment
☐ Noise Calculation (Attach) ☒ Catalog Data

NOISE MEASUREMENT CONDITIONS:
☐ Free Field Describe:
☐ Reverberant
☒ Semi-reverberant
☐ Other Describe:

4. **NOISE LEVELS**

OCTAVE BAND CENTER FREQ [Hz]	A Equipment Noise Level Allotment: Maximum RMS Lp at __1__ meter(s)	B-1 Maximum RMS Sound Pressure Level (Lp) in dB re: 20 μPa at __1__ meter(s): Standard Equipment	B-2 With Special Design	B-3 Added Acoustic Treatment	C-1 Maximum Sound Power Level (Lw) in dB re: 1 picowatt (10^{-12} watt): Standard Equipment	C-2 With Special Design	C-3 Added Acoustic Treatment	OBCF [Hz]
31.5	93	84	81	88				31.5
63	91	86	84	87				63
125	89	88	85	86				125
250	85	90	86	85				250
500	79	87	84	80				500
1000	74	88	81	74				1000
2000	70	86	79	71				2000
4000	67	82	76	67				4000
8000	67	80	70	65				8000
Overall dB(Lin)	97	96	92	93				dB(Lin)
Overall dB(A)	82	93	87	82				dB(A)

5. Brief description of Special "Noise Control" Design and/or Added Acoustical Treatment :
Special Design: **Quiet casing and coupling design**
Added Acoustical Treatment: **Inlet and discharge pipe lagging to headers**
Any Other Means:

6. Additional cost(s) for Special Design and/or Added Acoustical Treatment(s), respectively, as bid.
Special Design: **$650 per unit**
Added Acoustical Treatment: **$225 per unit**
Any Other Costs:

7. Special equipment noise characteristics (tonal pitch, directional, impulsive, etc.) :

8. Sound Pressure Levels (Lp) are to be measured per ANSI-S1.13 - "Measurement of Sound Pressure Levels in Air" and recorded on Sheet 2, along with equipment sketch and test locations. If a different method and/or if catalog data are used, describe and fully reference:
Pump Catalog with documented noise data - Catalog No. P9602

9. Notes, Comments and/or Exceptions:

10. Noise Emission Guarantee:
We guarantee that the noise emission from an operating unit of the above equipment, as bid, will not exceed the overall A-weighted sound level or the linear octave band levels stated under Column 4-A, at the specified distance.

Signature: *W. E. Agree* Date: **7/15/98**

INSTRUCTIONS:
1. Buyer fills in Sections 1 and 4-A.
2. Bidder fills in Secs. 2, 3, 4-B, 4-C, and Sections 5-10, plus Sheet 2 if tested.

EXAMPLE NOISE DATA SHEET

SHEET	OF	JOB NUMBER
1	2	112233-90000

DOCUMENT NUMBER	REV
SD-NSPS-00-ME-10	0

PES-N&V-01-MH(7/98)

Book 2

Facility Design Guidelines

Chapter 7
Corrosion Control Design Criteria

City of San Diego Water Department
Capital Improvements Program

Chapter 7
CORROSION CONTROL DESIGN CRITERIA

7.1 Introduction

Many facilities, both underground or submerged, contain metallic structures and components which, when in contact with soil and/or water without protection against corrosion, tend to deteriorate and fail prematurely. This chapter addresses the application of corrosion control methods, such as coatings and linings and the selection of materials, needed to afford protection from corrosion to such facilities.

Complete guidelines for the DESIGN CONSULTANT for the application of cathodic protection to mitigate corrosion at various facilities and pipelines are outlined in Book 1, Chapter 9.

7.2 Protective Coatings and Linings

The term ”coatings” refers to materials applied to the exterior surface of a structure for corrosion protection. ”Linings” describes materials applied to pipe or tank interiors for corrosion protection.

Pipeline and tank coatings and linings must have certain common characteristics to ensure long-term corrosion protection. Characteristics considered during the selection of protective coating and lining systems include the ability to apply with minimal defects, adhesion to the structure surface, ability to resist development of holidays as the coating or lining ages, ability to withstand normal wear, handling and storage, and repairability. Cost and availability is another consideration.

Dielectric (electrically insulating) coatings must provide and maintain effective electrical insulation and resist cathodic disbondment. Conductive coatings and linings, such as cement mortar, must be capable of resisting significant cracking and maintaining an alkaline environment to passivate underlying metal surfaces for durability over long periods of time.

The DESIGN CONSULTANT should consider reference materials from NACE, AWWA and manufacturers’ trade associations for pipe lining and other methods of corrosion prevention for pipeline interiors.

7.2.1 Linings

Linings refer to coating materials used on the interior surface of carbon steel and concrete structures. Linings are used to prevent internal corrosion and maintain a smooth surface to maximize flow capacity and resist wear. The linings must not impart any taste or odor to the water and should be approved by the National Sanitation Foundation (NSF) for potable water contact.

The DESIGN CONSULTANT should consider reference materials from NACE, AWWA and manufacturers’ trade associations for pipe lining and other methods of corrosion prevention for pipeline interiors.

A. Cement Mortar

Cement mortar is the most commonly used internal lining for water mains made of ductile iron and steel larger than 3 inches in diameter. Experience has shown that cement mortar is a durable lining capable of providing many years of service with minimal maintenance under most conditions. With a few precautions, cement mortar linings can be expected to be very reliable. Cement mortar protects the underlying metal surface by passivating it through contact with the alkaline cement paste. Under most conditions, the protection lasts as long as the lining is intact.

1. General Considerations

Corrosion protection is provided to metal pipe surfaces by cement mortar for as long as the cement paste is intact. Cement paste can be leached out of the lining by prolonged contact with soft water. The leaching characteristics of water can be predicted by reviewing an accurate analysis of the water to be conveyed. Waters that promote leaching of cement paste are low in calcium and alkalinity, and may be low in pH. Waters of this type are generally found in coastal areas with surface water supplies, but rarely in inland areas.

Cement mortar linings are rigid and crack if the pipe has excessive deflection (out-of-roundness). Although small cracks are self-healing, large cracks may expose the metal surface to the water, with resulting corrosion. Therefore, sturdy bracing or stulling is required to maintain the round shape of pipes lined with cement mortar before shipping and installation. The stulling is removed before the pipe is placed in service.

Cement mortar linings may incur cracking under alternating wet and dry conditions. This is due to shrinkage of the lining as it dries. The best service life of cement mortar linings is obtained if the lining is kept in contact with water so that it remains fully hydrated.

Sulfate-resistant cements are generally used where sulfates/chlorides exceed approximately 300 mg/L. ASTM C150 Type II or Type V are sulfate-resistant Portland cements. When sulfate concentration exceeds 1,000 ppm, Type V cement is required.

Cement mortar linings are also susceptible to damage if the pipe is subjected to negative pressure or vacuum, even for brief periods. Therefore, surge protection is important and adequate vacuum relief valves must be provided for cement mortar-lined pipelines.

A final important consideration for cement mortar-lined pipes is that all joints should be lined with cement mortar to match the body of the pipe. This is important to provide corrosion protection at the joints. Joint lining is normally done for all pipe types with the exception of ductile iron pipe.

2. *AWWA Specifications*

Cement mortar linings are covered by AWWA standards for various types of pipe commonly used to convey water. The AWWA standards govern the thickness, mix design, and installation of the lining. In some cases, joint lining requirements are not included in the standard but are appended or may be obtained from pipe manufacturers.

3. Thickness for Alternative Pipe Materials

The thickness of cement mortar linings varies according to the type of pipe in which the lining is placed. All linings have manufacturing tolerances that allow slightly thinner linings. In concrete pressure pipe types, the cement mortar lining is considered part of the structural wall of the pipe and is included in calculations of pipe strength.

4. Welded Steel Pipe

Cement mortar linings for welded steel pipe are specified in AWWA C205. The lining thicknesses are defined in Chapter 3 of this Book 2.

Joint lining requirements are given in Appendix A of AWWA C205. Appendix A is not part of the standard, so the DESIGN CONSULTANT must specify joint lining requirements or paraphrase or reference Appendix A to ensure that joint linings are covered by the specification.

Cement mortar linings are NSF-approved for potable water contact. However, some fast-setting grout materials used for patching joints and other defects are not NSF-approved and contain compounds that may impart taste and odor in transmission lines with low flowrates. Non-NSF approved compounds are not allowed.

Cement mortar linings can be applied to the pipe interior during pipe manufacture or during construction of the pipeline in the field. Plant-applied linings are applied by a centrifugal process to a thickness of 3/4-inch. Field joints are lined with cement mortar grout and troweled smooth with the plant-applied lining.

Cement mortar can also be applied in the field after the pipeline is installed. This process provides a continuous lining, and patching of field joints is not required. Steel pipe interiors are not to be painted prior to cement mortar field lining. Steel is left bare.

5. Ductile Iron Pipe

Cement mortar linings for ductile iron pipe are specified in AWWA C104. Minimum lining thickness for pipe and fittings must be double the AWWA requirements.

A seal coat of asphaltic material, which is commonly applied to cement mortar linings in ductile iron pipe is not required.

B. Epoxy Linings

Epoxy linings are used less commonly than cement mortar linings for water pipe. Epoxy linings are thin films compared to cement mortar. A typical epoxy lining is approximately 16 mils thick (1 mil equals 0.001 inch).

Many paint manufacturers produce conventional epoxy coatings that are NSF-approved for potable water contact. Epoxy linings may be used in the following special situations:

- For pipes located in buildings or structures in instances where the pipe is disassembled periodically.
- For pipes with complicated shapes, such as discharge headers for pumps.

- For pipes where velocities are too high for cement mortar linings.
- For fabricated steel fittings, such as flexible couplings.

7.2.2 Coatings

Coatings refer to materials applied to the exterior of pipes and components. The term “paint” is frequently used as a synonym, but it is less accurate because it sometimes refers to materials applied for appearance, whereas coatings are applied primarily for surface corrosion protection.

Protective coating considerations for buried pipelines are coordinated with the information for cathodic protection given in Chapter 9 of Book 1.

A. Welded Steel Pipe Coatings

All modern applications of steel water pipelines use protective coatings for buried service. Several types of coatings are commonly used.

1. Cement Mortar

Cement mortar coatings and linings have a long service history for corrosion protection of steel and iron water pipelines. Cement mortar coatings are covered by AWWA C205. As with linings, joint coatings are not included in the body of AWWA C205 and must be properly specified.

Cement mortar coatings are applied to steel pipe by a pneumatic process during manufacture. Exterior coatings are a minimum of 1-1/4-inch thick and are reinforced with spiral wire, wire mesh, or wire fabric. Field joints are coated with cement mortar grout. A circumferential band or "diaper" is normally placed around the joint to retain the grout. Proper mortar coating of field joints is critical to long-term durability of this coating. Experience has shown that field joints tend to be the weakest points in cement mortar-coated pipelines.

The corrosion protection qualities of cement mortar coatings can be adversely affected by alternating wet and dry conditions. Salts from soil and groundwater can be wicked into the mortar coating and can concentrate under repeated drying cycles. The protective qualities of cement mortar can also be compromised if the pipe is struck by hard blows that cause disbondment between the mortar and the metal of the pipe.

Unlike the other exterior coatings discussed in this section, cement mortar is not a dielectric coating. Pipelines installed with cement mortar coatings require higher current densities for cathodic protection than pipelines with dielectric coatings in good condition. Since the coating is conductive, the effect of electromagnetic coupling (induced voltages) is less on cement mortar-coated pipelines. However, cement mortar-coated pipelines are still susceptible to elevated potentials under powerline fault conditions.

2. Tape and Cement Coatings

Prefabricated cold-applied polyolefin tape and cement mortar coated pipelines can be used where protective qualities of cement mortar only might be compromised

from mechanical damage if cathodic protection is proposed.

Tape coating for pipelines and fittings should be in accordance with AWWA C214 for pipelines, and AWWA C209 for fittings, exterior cement mortar (rockshield) are minimum 3/4-inch thickness and are reinforced with spiral wire, wire mesh, or wire fabric.

3. Epoxy Coatings

Liquid epoxy coatings include polyamide or polyamine-cured epoxy coating systems. These coating systems are commonly used to protect exterior surfaces of appurtenances such as valves, couplings, and blind flanges.

Coal tar epoxy and "conventional" epoxy (no coal tar fillers) are also available. Coal tar epoxy can be applied over a primer or directly to sandblasted steel. These coatings are applied in one or two coats to a dry film thickness of 16 to 18 mils.

To provide a suitable service life, liquid epoxy coatings must be applied to steel with a near-white metal sandblast (SSPC SP-10) surface preparation. White metal sandblasting (SSPC SP-5) should be used for submerged metal surfaces. Liquid epoxy coatings require a minimum cure time that depends on atmospheric conditions with good ventilation before the coated surface can be backfilled or submerged.

B. Ductile Iron Pipe

1. Petrolatum (Petroleum Wax) Tape

Petrolatum tape wrap is a preferred method of protecting ductile iron pipe with or without cathodic protection against corrosion. Petroleum wax tape is also an acceptable method of protecting valves. The wax tape can easily be hand molded in and around all crevices to eliminate any air pockets. In addition, it can easily be removed at any time and reused.

2. Epoxy Coatings

Liquid epoxy coatings, the same as used for welded steel pipe coatings, can be used for ductile iron pipe fittings. However, special attention should be used during application because of the surface roughness of ductile iron pipe and fittings. Epoxy coatings will have a tendency to pinhole unless the first coat is thinned or applied using a mist coat/full coat application.

3. Polyurethane Coatings

Ductile iron pipe and fittings are also coated with a high solids polyurethane coating using a two component, 1:1 mix ratio, heated airless spray unit. These coatings are generally applied in a shop, but they can be applied in the field using special equipment. Shop-applied coatings require 100% holiday inspection with normal field inspection before and after installation.

4. Polyethylene Encasement

Based on experience, the use of a loose polyethylene encasement is not an acceptable method of protecting ductile iron pipe or valves.

7.2.3 Welded Steel Tanks and Reservoirs

Exterior coating, interior lining, and where necessary, complete removal and recoating surfaces of steel water tanks, surge tanks and reservoirs must be done in accordance with AWWA D102.

In general, for new steel tanks, AWWA D102, outside coating System No. 5, and inside coating System No. 2 should be used. Lining material should be approved by the National Sanitation Foundation (NSF) for potable water contact.

Lining coating material selection must be coordinated with information for cathodic protection.

7.3 Materials Selection

7.3.1 General Exposures

The following is a brief discussion of the main exposures to materials anticipated at water facilities. Additional information on corrosive environments is presented in Chapter 9 of Book 1.

A. Soil Exposures

Most soil environments and groundwaters can be corrosive to buried metal structures. Resistivity measurements, which can be made in the field or the laboratory, indicate how corrosion currents flow through soils or groundwaters. High concentrations of chlorides and sulfates contribute to a reduction in resistivity and an increase in the corrosion activity of a material. In the presence of oxygen, chloride ions can be extremely corrosive to steel. Similarly, high levels of sulfates can reduce soil or groundwater resistivity and corrode steel and can cause the concrete to deteriorate.

B. Surfaces Exposed to Fluids

Surfaces exposed to fluids include the interiors of pipelines and equipment such as pumps. Metals in contact with water streams are subject to corrosion, particularly when exposed in splash zones.

C. Atmospheric Exposures

Much of San Diego is exposed to a marine environment. This environment includes airborne salts and locations in which structures may be exposed to direct salt spray. Atmospheric exposure may, therefore, be severe in projects in the San Diego area. The combination of wet/dry cycling in the presence of chlorides found in salt spray can create the potential for significant corrosion activity on all exposed metal surfaces.

7.3.2 Material Considerations

The following paragraphs describe the performance to be expected from various materials used for water facilities in the Greater San Diego area. Table 7-1 gives supplemental information on

acceptable materials.

A. Concrete

Soil Exposure: Concrete is typically a durable material in underground service. It is rarely affected by electrolytic corrosion like metals, and unless the pH of the soil, groundwater or process stream is less than 5.5, the chloride concentration is 300 ppm or more, or the sulfate concentration is greater than 1,000 ppm, concrete is suitable for use in soil exposures. Soils and groundwater found in the San Diego area may contain significant concentrations of chlorides and sulfates which are detrimental to concrete and reinforcing steel. Attack on concrete and steel is likely when soils are acidic. When the pH of the soil is at or below 5.5, barrier coatings are required to protect the concrete surface. In areas of high sulfate concentrations (greater than 1,000 ppm) modification of water-cement ratio, use of Type V cements (sulfate resistant) and barrier coatings must be considered for all buried concrete.

Reinforced concrete structures are also subject to cracking and spalling due to corrosion of reinforcing steel. Because the volume of corrosion products is much greater than that of the reinforcing steel itself, great pressure is exerted on the concrete, causing it to crack and eventually spall. It is therefore recommended that exposure of concrete surfaces to chlorides be minimized through the use of coatings.

B. Steel

For all exposures, steel should be electrically isolated from dissimilar metals to prevent the formation of unfavorable galvanic corrosion cells. Cathodic protection by impressed current or galvanic anodes is desirable in conjunction with protective coatings.

Soil Exposure: Low resistivities and high chloride concentrations in the soil may lead to corrosion of buried steel pipelines or structures. Cathodic protection should be considered for all buried steel pipelines or structures. Where cathodic protection is not provided, corrosion monitoring equipment should be incorporated into the design to allow staff to monitor the condition of the pipelines or structures. Non-welded joints are bonded for electrical continuity. Coatings should also be considered. Coatings may be used alone or in conjunction with cathodic protection. Recommendations for coating systems are discussed later in these Guidelines.

Steel structures should be well-coated and cathodically protected where the potential for corrosion is high based on resistivity and soil chemical analyses. This is expected to be common due to the corrosive nature of the soil environment in the San Diego area.

Fluid Exposure: Bare or galvanized steel is subject to corrosion when exposed to fluids at a water facility. Corrosion is most severe in the splash zone where atmospheric oxygen hastens the corrosion process. Steel, if submerged, should be coated or lined with a material suitable for use in the anticipated exposure. Because of concerns regarding the corrosion of steel in contact with the process streams, cathodic protection must be provided for these steel structures considered to be in a corrosive exposure. This type of corrosion control should be incorporated along with suitable coatings or linings.

Atmospheric Exposure: Corrosion of steel structures at water facilities is likely due to exposure to atmospheric chlorides near marine environments or chlorine process streams. Protective

coatings with good UV resistance is desirable.

C. Ductile Iron

Soil Exposure: Ductile iron pipe can be expected to provide performance similar to steel in most exposures. Ductile iron pipe is treated in the same manner as steel.

Fluid and Atmospheric Exposure: When exposed to fluids or under atmospheric conditions, ductile iron can be expected to corrode at a rate similar to that for bare or galvanized steel. Ductile iron is treated in the same manner as steel.

D. Aluminum

Soil Exposure: In general terms, dry, sandy and well-aerated soils are not corrosive to aluminum. However, as moisture and dissolved salts increase, the soil becomes more aggressive to aluminum. Where levels of chlorides, sulfates or pH are high, contact with the soil may be detrimental to buried aluminum. Its use, therefore, is not recommended for underground applications.

Fluid Exposure: When exposed to fluids, aluminum is most stable in the pH range between 4 and 8.5. Because it is an amphoteric material, it is attacked by both acids and bases. Therefore, contact with solutions with pH greater than 8.5 or less than 4 causes corrosion of the aluminum.

Severe pitting of aluminum can occur where iron or copper ions are in a solution in contact with aluminum. A galvanic couple is established in which aluminum is attacked at localized areas. Chloride ions can also lead to pitting in aluminum. This is most likely to occur in crevices and other stagnant areas. The introduction of chemicals like ferric chloride into the process stream causes severe degradation to aluminum and failure can occur rapidly. Due to the wide range of pH values found in wastewater facilities, aluminum is not recommended for use in fluid exposures.

Atmospheric Exposure: Aluminum has excellent resistance to atmospheric pollutants. Its resistance to atmospheric corrosion is due to a tightly adherent oxide film, and destruction of this film by either mechanical or chemical means exposes a very reactive surface. If the protective oxide film is disturbed, the presence of salts, including chlorides, can cause rapid pitting of aluminum. Further, electrical coupling to iron, stainless steel, or copper accelerates this deterioration.

Aluminum is stable only in a small range of pH values. For example, aluminum handrails to be installed in concrete (pH 12 to 13) should be placed in plastic shields, cast into the concrete. In addition, a sealant should be placed between the plastic shield and the aluminum. Under these conditions, aluminum performs acceptably. Alloys typically used include 5052 and 6061, but most alloys show similar atmospheric corrosion characteristics. The aluminum-copper precipitation hardening grades (2000 series) generally show somewhat greater corrosion, and the pure aluminum and al-clad varieties (1000 series) exhibit somewhat less corrosion.

Aluminum is not recommended in areas where spillage of chlorine, sodium hydroxide, or other strong acids or bases may occur.

Anodized aluminum has shown excellent performance in limited applications at water facilities. Although it would most likely be dinged and abraded in uses like handrails, anodized aluminum can be used in a number of other areas, such as electrical switchgear enclosures.

Because aluminum is an electrically active metal (standard potential of -1.66 volts versus standard hydrogen electrode), its use in water is limited. When coupled to any of the common engineering alloys (steel, iron, stainless steel, copper and its alloys), aluminum becomes the anode, and galvanically corrodes. For this reason, aluminum must be electrically isolated from dissimilar materials.

E. Copper and Brass

Soil Exposure: Copper and brass typically perform quite well in underground applications where the pH is neutral to alkaline and the concentration of aggressive ions, such as chloride and sulfate, is low. They are often used for potable water lines and fittings. Copper is a corrosion-resistant material which does not depend on the formation of an oxide or other surface film to be protected from corrosion. Because it is cathodic to iron and aluminum, it hastens their corrosion when coupled to them. Isolation of copper from most materials commonly used in wastewater plant construction is therefore required in buried service. Because copper is an excellent electrical conductor and maintains a low resistivity interface with the soil, bare copper cable is often used for grounding systems. Unfortunately, this can lead to galvanic corrosion of steel and iron, and to very high current requirements for cathodic protection systems.

Various solutions have been proposed, such as grounding cells, which are essentially dielectric until large potential differences (ground faults) occur. When ground faults do occur, the cell short circuits and dissipates the charge. Copper is subject to changes in corrosion resistance with changes in temperature, so electrolytic corrosion can occur on hot and cold water lines buried in a common trench. To prevent this, the two lines should be isolated from each other at points of electrical contact. This can be accomplished with the use of insulating couplings. However, where high concentrations of chlorides (300 ppm or more) or high sulfate concentrations (1,000 ppm or more) or low pH values are found (5.5 or less), copper or brass piping should not be used without a tape wrap coating and cathodic protection. Furthermore, when copper or brass is used in an aggressive environment, it should be electrically isolated from other structures. If copper piping is used to connect copper service lines to plastic mains, brass tapping saddles should be used.

Fluid Exposure: Copper and brass typically have good corrosion resistance in aqueous solutions. Further, if copper is coupled to a less noble metal like steel or aluminum, galvanic corrosion of the less noble metal may result. Because copper is a fairly soft material, it is also subject to erosion corrosion. This type of corrosion is accelerated by high fluid velocities, high temperatures and abrasive particulate matter.

Copper and brass should not be used in streams which allow exposure of the metal to solutions carrying residual chlorine (2 ppm or more). This is especially critical in reclaimed water systems, as chlorine can cause severe corrosion of copper and brass.

Brasses containing over 15% zinc may suffer dezincification. This form of corrosion is especially prevalent in stagnant, acidic solutions. Copper and brass are therefore not recommended for fluid exposures.

Atmospheric Exposure: Copper and brass typically have excellent atmospheric corrosion resistance.

F. Stainless Steel

Soil Exposure: In soil, stainless steel is fairly resistant to uniform corrosion, which occurs over the entire surface. However, it may be subject to pitting corrosion. Stainless steel pipe is most often used in situations where contamination of the material carried in the pipe is the prime concern. However, because pitting of the buried structures might occur where soil conditions surrounding the pipe vary, it is not recommended to install stainless steel pipe below ground, and it is not recommended to apply a protective coating on stainless steel.

Fluid Exposure: Stainless steels are typically resistant to corrosion in flowing waters. Of the various types of stainless steels, the austenitic grades (300 series) show the best performance. In stagnant waters, however, pitting of stainless steel may occur. Oxidizing metal salts such as ferric chloride may also attack stainless steel. Type 304 and 316 alloys are more resistant to chlorine, hypochlorous acid (HOCl) and hypochlorite ions than other alloys that might be used in the process streams.

Atmospheric Exposure: Stainless steel has been used with much success in both outdoor and indoor applications. Of the various types of stainless steel, the austenitic grades (typically 302, 304, and 316) generally have the best corrosion resistance. Of these three alloys, 316, although more expensive than the others, is the most resistant to pitting.

The austenitic alloys are resistant to chlorides and moisture likely to be found in water facilities. There are also advantages to using stainless steel in combination with other metals. This is true where the more anodic material has a much larger surface area than the cathodic material. For example, galvanic corrosion has not been a problem where stainless steel fasteners are used to hold down aluminum deck plates. This is because the amount of stainless steel (cathodic material) used to hold down the aluminum (anodic material) is quite small in comparison with surface area ratios. Overall, stainless steel has been demonstrated to provide excellent corrosion resistance in severe atmospheric environments.

G. Polyvinyl Chloride (PVC)

Soil Exposure: PVC is often used in soil exposures. Being a polymeric material, its resistance to corrosion in water and soil is excellent. PVC is widely used for electrical conduits and water pipelines. When buried, mechanical damage is unlikely. Even when buried, further protection can be provided by encasement in colored concrete and/or the use of warning tape. Where it is important that the pipe be located easily, metallized tape or a tracer wire can be routed in the same trench as the PVC pipe to enable detection.

Fluid and Atmospheric Exposures: In wastewater plant applications, PVC has had excellent success. It is unaffected by the levels of moisture and atmospheric chlorides. However, its resistance to many organics is limited (particularly ketones, esters, and aldehydes) so it should not be used to carry these materials. Care should be taken in the use of PVC in contact with chlorine. PVC is suitable for the transport of dilute chlorine solutions; however, its use is not recommended for transporting liquid or gaseous or dry chlorine above 73°F and it is only marginal for dry chlorine at less than 73°F. Similarly, PVC should not be used in applications where temperatures can exceed roughly 140°F. The manufacturer should be consulted prior to

using PVC products in chemical exposures or high temperature applications.

H. Other Polymeric Materials (All Exposures)

Most other polymers are resistant to the chemicals normally encountered in water facilities. However, this does not apply to concentrated chlorine (dry or wet gas), which is extremely corrosive. Polyolefins (polypropylene) generally have good resistance to corrosion. Chemically, they are essentially inert, and, with the exception of chlorine, should be resistant to the chemicals likely to be encountered. Polypropylene is suitable for temperatures up to 180°F and polyethylene is suitable up to 140°F.

Most plastics are suitable for burial. Polyolefins are waterproof and may also be buried. Polyethylene is often used for natural gas service due, in part, to its corrosion resistance, toughness and resistance to cutting.

I. Fiber Reinforced Plastics (Fiberglass, All Exposures)

Fiber reinforced plastics have been used successfully in water facilities. These materials are based on glass-reinforcing fibers held in a matrix of a thermoplastic (polyester type) or a thermosetting resin (epoxy type), and are available in a wide variety of structural forms such as tubes, angels, and grates. Both types are extremely resistant to corrosion by water, chlorides and most other chemicals commonly found in a water facility. The exception is chlorine. Polyester-based, fiber-reinforced plastics have somewhat better resistance to wet chlorine than epoxy-based plastics, but manufacturer's application data should be consulted before any material is selected for chlorine service. Depending on concentrations, dilute chlorine solutions may not present problems.

Manufacturers should be contacted for each service application where the use of these materials may be considered. There have been significant failures of this type of material when the material was improperly selected. The DESIGN CONSULTANTS must carefully evaluate the intended application because fiberglass does not have the same structural strength or physical properties as steel.

Table 7-1
General Guidelines for Material Selection

Item	Acceptable Materials of Construction
Buried Pipe	
• Transmission Pipe	DIP(1) (2) SCRW(1)(8) and CMLTCMC steel(1)(8), CMLC steel(3) and PVC
• Transmission Pipe Fittings	Steel(1)(4)(5) and ductile iron(1)(2)
• Distribution Pipe	Ductile iron(2) and PVC
• Distribution Pipe Fittings	Cast iron(2) and ductile iron(2)
• Service Pipe	PVC and copper type K
• Bolts and Fasteners	Stainless steel(6)(7), and galvanized steel(7)
Exposed Pipe	DIP(9), Steel(9), PVC(10)
Water Pipe Valves	
• Body	Cast iron(7), ductile iron(7), and cast steel(7)
• Stem and Trim	Bronze and stainless steel(6)
• Control Tubing	Stainless steel(6)
Pumps	
• Body	Cast iron and ductile iron
• Impeller	Bronze
• Shaft	Stainless steel(6)
Water Reservoirs	Reinforced concrete or steel
Drains, Sanitary	PVC
Culverts and Storm Drains	Reinforced concrete pipe
Structural Concrete	Type V cement, minimum 2-inch cover over reinforcement
Structural Metal	Galvanized steel
Ladders	
• Dry	Aluminum, galvanized steel and fiberglass
• Submerged	Stainless steel and fiberglass
Hydraulic Gates	Cast iron
Handrail	Aluminum, galvanized steel
Electrical Enclosures	Galvanized steel, stainless steel and fiber-reinforced plastic
Electrical Conduit (low voltage)	
• Buried	Concrete encased PVC
• Exposed	Galvanized steel or PVC coated galvanized steel in corrosive areas

Table 7-1
General Guidelines for Material Selection
continued

Notes:

1. Provide cathodic protection in immersion services and where soil conditions are corrosive.

2. Cement mortar lined with liquid epoxy or polyurethane coating. Requires cement mortar lining and detailed quality control to ensure coating damage is repaired prior to backfilling pipe and to ensure proper backfilling procedures.

3. Not used in agressive soils.

4. Cement mortar lined and coated.

5. Cement mortar lined, tape wrapped, mortar coated for corrosive soils.

6. Use type 316 stainless steel.

7. Polyamide-cured epoxy coated and wrapped in petrolatum/wax tape for buried service.

8. At structures adjacent to cathodically protected transmission pipe, pipe shall also have a liquid epoxy coating.

9. Cement lined, aliphatic acrylic polyurethane coated.

10. Acrylic latex coated.

Abbreviations:

ABS	Acrylonitrile-Butadiene Styrene
CMLC	Cement Mortar Lined and Coated
CMLTCMC	Cement Mortar Lined, Tape and Cement Mortar Coated
DIP	Ductile Iron Pipe
PVC	Polyvinyl Chloride
SCRW	Steel Cylinder Rod Wrapped
VC	Vitrified Clay

Book 2

Facility Design Guidelines

Chapter 8
Seismic Criteria

City of San Diego Water Department
Capital Improvements Program

Chapter 8
SEISMIC CRITERIA

8.1 General

8.1.1 Purpose

The services provided by the City of San Diego Water Department are a vital lifeline for the community and must be designed for a very high degree of reliability. The City of San Diego, and much of its capital facility is located within an area of California that is at risk of experiencing major earthquakes. Loss of Water Department facilities following an earthquake disaster could result in a general hazard to the public health as well as inability to control concurrent emergencies such as fires. The purpose of this document is to set forth a consistent and economical set of criteria for the seismic resistive design of San Diego Water Department facilities in order to provide an appropriate level of reliability.

8.1.2 Intent

It is intended that this document be used as a reference by all persons performing design of City of San Diego Water Department facilities including City engineering staff, consultants, suppliers, and design/build contractors. Where applicable, design of City of San Diego Water Department facilities shall in general conform to standards specified herein. Designers are cautioned these standards must be applied with basic principles of engineering mechanics and application of sound engineering judgment in order to provide appropriate designs.

This document incorporates by reference, wherever appropriate, the applicable building codes and industry standard procedures typically used for the design of similar facilities. This includes codes and specifications published by the International Conference of Building Officials (ICBO), the American Concrete Institute (ACI) and the American Water Works Association (AWWA). Nothing in this document should be construed to allow design of new facilities to a level less than required by the applicable building codes and industry standards.

8.1.3 Applicability

A. Work Included

This document is applicable to the design, repair, alteration, and rehabilitation of the following types of facilities:

- Buildings (including pumping plants, process buildings, control centers, warehouses, service centers; and their equipment, systems and contents).
- Water retention structures (including clearwells, sedimentation basins, filter beds, digesters; and their internal elements including columns, pipe risers, division walls, etc.).
- Reservoir roof structures.
- Outlet towers.
- Small buried structures including valve boxes, vaults and pumping plants.

- Underground piping (transmission and distribution water mains).
- Atmospheric storage tanks.

B. Work Excluded

This document does not apply to the design of the following types of facilities:

- Dams and associated components under California Division of Safety of Dams (DSOD) jurisdiction. The DSOD should be consulted regarding seismic evaluation / design criteria for the particular component under their jurisdiction.

8.1.4 Facility Importance and Performance Goals

The Uniform Building Code (UBC) performance goals have been formulated with the intent of protecting building occupants from life safety hazards resulting from earthquake damage, as opposed to attempting to ensure post-earthquake operability of facilities. Buildings built to the UBC may still suffer significant damage after an earthquake, such that they may not be able to perform their function. In some cases, resultant damage to UBC code-built buildings may be so significant such that repair of the building is not economical, and total demolition is warranted.

The UBC recognizes that some facilities, such as Emergency Operations Centers, Hospitals and similar "Essential Facilities" should have better performance such that they are available for use immediately following an earthquake. In order to accommodate this goal, the UBC specifies somewhat higher design force levels and more rigorous quality assurance measures during the design and construction process. The adjustment in force level is typically obtained with the application of an occupancy Importance, or "I" factor.

The criteria described in this document are intended to provide greater reliability for the City of San Diego Water Department facilities than would be obtained by straight application of the UBC and other similar standards, when such reliability is economically justified. Depending upon the level of service required after an earthquake, each new facility should be assigned an "I" factor. Table 8-1 provides three groups of importance.

Where the detailed requirements of this Standard or referenced standards and codes require the application of an Important Factor, I, such factor shall be determined in accordance with the Table 8-1.

Examples. If a pumping plant is the only source of water for a pressure zone, and if maintaining flows to the pressure zone is considered essential, then the non-redundant parts of that pump station should be designed with I=1.5. Elements of the pump station building that are not essential to pumping plant operation, such as lighting and ventilation, could be classified as Important (I=1.25). If there are two water tanks within a pressure zone, then each of the water tanks could be classified as I=1.25 (the two tanks mean that the zone has a redundant water supply for immediate post-earthquake fire service). If there is one tank and one pumping plant serving a pressure zone, and that pumping plant has a reliable source of power and a reliable supply of water and can pump the fire flows, then each of the pumping plant and water tank could be classified as I=1.25. Critical facilities (I=1.5) include non-redundant parts of the Otay, Alvarado and Miramar water treatment plants. Critical

facilities (I=1.5) include pumping plants in pressure zones having no redundancy (either only one pumping plant serving a zone with no in-zone storage, or multiple pumping plants serving a zone with no in-zone storage and neither pumping plant has a reliable source of power). When assessing whether a facility has I=1.25 or I=1.5, a credible common cause failure mode that affects both the redundant structures should be considered; for example, if a single landslide were to fail two tanks, then the tanks are not redundant.

Table 8-1
Facility Importance and Performance Goals

Facility Class	Description	Performance Goal
Standard I=1.0 (Same as 1997 UBC Special, Standard or Miscellaneous categories)	Administrative centers, repair shops, service centers and similar support facilities	Provide substantial life safety protection for major earthquakes likely to affect the site. Facility may not be economically repairable in the event of such an event.
Important I=1.25 (Same as 1997 UBC Essential, or Hazardous categories)	Structures and components of the transmission, distribution, treatment, and control systems with some level of redundancy or for which failure does not result in an unacceptable level of service.	Provide substantial life safety protection for major earthquakes likely to affect the site. Facility may experience significant damage but should be capable of restoration to service within a limited period of time.
Critical I=1.5 (Other requirements same as 1997 UBC Essential, or Hazardous categories)	Structures and components of the transmission, distribution, treatment, and control systems with little or no redundancy and the failure of which results in an unacceptable level of service.	Provide substantial life safety protection for major earthquakes likely to affect the site and provide reasonable expectation of immediate, or essentially immediate post-earthquake operability.

8.1.5 Reference Codes and Standards

Regardless of design basis, all newly constructed City of San Diego Water Department facilities shall as a minimum comply with the applicable provisions of the following codes and standards, latest edition: (Note that where dates are shown for these standards, this indicates the edition to which reference is made for sections, tables and formulas specifically called out in this document).

- Buildings, structures & equipment - Uniform Building Code, as published by the International Conference of Building Official, April, 1997.
- Fire Suppression Systems - NFPA I3, as published by the National Fire Protection Association.
- Reinforced concrete water retention structures - ACI 350, as published by the American Concrete Institute, 1989.
- Welded Steel Water Tanks - ANSI/AWWA D100-96, as published by the American Water Works Association, 1996.
- Bolted Steel Water Tanks - ANSI/AWWA D103-97, as published by the American Water Works Association, 1996.
- Prestressed Concrete Tanks - ANSI/AWWA D110-95, as published by the American Water Works Association, 1995.

8.1.6 Symbols and Notation

Where used in Chapter 8, the symbols and notation below shall have the meaning indicated.

D	Required freeboard for tanks - ft
ft	feet
f_p	Seismic force on component - lbs/ft
f_w	Hydrodynamic force on submerged component - lbs/ft
g	Acceleration due to gravity = 32.2 ft/sec^2
gpm	gallons per minute
lbs	pounds
kips	kilo-pounds
k_h	horizontal seismic coefficient in the soil (Equation 8-1)
km	kilometer
m	meter
psf	pounds per square foot
r	Radial distance from center of tank to submerged object - ft
s_u	Undrained shear strength of soil, psf
t	time - sec
u	Fluid particle velocity - ft/sec
|u|	Absolute value of fluid particle velocity - ft/sec
$\hat{u}$	Fluid particle acceleration - ft/sec2
$\ddot{u}_v$	Vertical peak ground acceleration - g
w_p	Unit weight of component - lbs/ft
w_w	Unit weight of water displaced by component - lbs/ft
A	Area of cross section of a component - in^2
C_a	Numerical coefficient specified in Table 8-3 to represent site specific peak ground acceleration
C_d	Drag coefficient, taken as 1.0 for circular sections and 1.6 for open sections such as structural shapes
C_s	Numerical coefficient calculated in accordance with Equation 8-6, representing the spectral amplification for the first mode of sloshing of contents of tank for a 1/2% damped spectrum
C_v	Numerical coefficient specified in Table 8-4 to represent site specific peak ground acceleration when evaluating a component in the longer period range or a response spectrum

C_w	Numerical coefficient used in the calculation of first mode impulsive period of tank.
D	Diameter of tank - ft
D_c	Diameter of circle that circumscribes perimeter of submerged object at level under consideration - ft
G	Specific gravity of fluid (equals 1.0 for water)
H	Total height of the fluid in the tank - ft
H_f	Height of base of tank above base of foundation - ft
H_{rw}	Height of the wall that is retaining the soil
H_t	Total height of tank shell- ft
I	Importance factor per Table 8-1
IBC	International Building Code
M	Flexural moment at a section of an element - ft-lb; or Moment Magnitude
M_f	Total overturning moment of tank and foundation - ft-lb
N_a	Near field source factor per Table 8-5
N_c	Convective hoop force in shell of tank - lbs/in
N_i	Impulsive hoop force in shell of tank - lbs/in
N_v	Near field source factor per Table 8-6
PGA	Peak ground acceleration - g
PGD	Permanent ground deformation
PI	Plasticity Index
Q	Numerical coefficient representative of the ductility and quality of non-conforming construction, Table 8-9a,b,c
R	Response modification factor per UBC (1997 edition) Table 16-N, except as otherwise specified herein
R_w	Response modification factor per AWWA D-100 (1996 edition) Table 25, except as otherwise specified herein
S	Site coefficient for soil characteristics given in Table 16-J of the 1994 UBC
SDWD	San Diego Water Department
S_A-S_F	Soil profile types (Table 8-2)
S_a	Spectral acceleration of an elastic structure with known natural period of vibration and damping - expressed in fractions of the acceleration due to gravity - g
S_{ai}	Spectral acceleration of tank shell and contents in impulsive mode, g, (can be taken as peak spectral acceleration from spectrum) for a 2% damped spectrum
S_{ac}	Spectral acceleration of tank shell and contents in convective (sloshing) mode, g, for a 0.5% damped spectrum
T	Natural period of vibration of a structure – sec

T_i	Impulsive period of water in tank - sec
T_w	Sloshing period of water in tank per AWWA D-100 Section 13.3.3.1 - sec
UBC	Uniform Building Code
V	Seismic shear force at the base of a structure - lbs
V_f	Total shear associated with tank and foundation - lbs
W_1	Weight of effective mass of tank contents that moves unison with tank shell per AWWA D-100 Sec. 13.3.3.2 - lbs
W_2	Weight of effective mass of tank contents that moves in first sloshing mode, per AWWA D~100, Section 13.3.3.2 - lbs
W_f	Weight of foundation - lbs
W_r	Total weight of tank roof plus permanent loads, if any - lbs
W_s	Weight of tank shell - lbs
X_1	Height from the bottom of tank shell to the centroid of lateral seismic force applied to W_1 per AWWA D-100 Section 13.3.3.2 - ft
X_2	Height from the bottom of tank shell to the centroid of lateral seismic force applied to W_2 per AWWA D-100 section 13.3.3.2 - ft
X_s	Height from bottom of tank shell to center of gravity of the shell - ft
Y	Distance of object in reservoir below the undisturbed fluid surface (value of Y is negative if object is above surface) - ft
Y_i	Distance of object in reservoir above the undisturbed fluid surface - ft
Z	Seismic zone coefficient = 0.4g, representative of the effective horizontal peak ground acceleration produced by an earthquake - g
γ	Unit weight of fluid - lbs/ft^3
γ_s	Unit saturated weight of soil backfill - lbs/ft^3
Δp	Incremental dynamic earth pressure due to seismic shaking on embedded structures

8.2 Site Criteria

The Uniform Building Code (UBC) has established that the minimum earthquake force design level for most of California is Z = 0.4g. The entire City of San Diego area falls within this zone.

The actual level of seismicity in portions of the City of San Diego area is not considered to be as high as in other seismically active parts of California such as the greater San Francisco, Los Angeles or Humboldt Bay areas.

Facilities which are ruggedly designed but constructed on unstable sites can perform less acceptably than poorly constructed structures on stable sites. It is important, therefore, in siting SDWD facilities to assess the probable seismic stability of each site; its susceptibility to earthquake-induced ground failures such as liquefaction, landslides, and fault rupture;

and, in the event that substantial site hazards exist, to identify appropriate mitigation techniques which can be used to assure acceptable performance. It should be remembered that the most reliable mitigation for site-dependent hazards may be selection of an alternative site that has stable characteristics.

The remaining sections of this chapter describe the faults that are believed to pose the most significant seismic hazards to the SDWD Service Area, the earthquake-related geotechnical / geologic hazards that may be prevalent at SDWD facility sites, and, to a limited extent, the design precautions which may be used to mitigate these hazards. By nature, site hazards are highly dependent on the individual sites, and development of an appropriate design program for these hazards should be based on site-specific study and the recommendations of a qualified geotechnical engineer.

8.2.1 Regional Faults and Seismicity

Figure 8-1 is a regional fault map for San Diego County and surrounding areas. Several known faults occur within the SDWD Service Area, including the Rose Canyon, Point Loma, and La Nacion faults. Significant faults that lie some distance outside the SDWD Service Area include the Newport-Inglewood, Coronado Banks, San Diego Trough and Elsinore faults, among others. The Silver Strand and Coronado faults lie just to the west of the SDWD Service Area. The Spanish Bight fault passes through San Diego Bay (which is inside the SDWD Service Area and through Coronado (which is outside the SDWD Service Area). The Point Loma and La Nacion faults are considered potentially active by the State of California, whereas the Rose Canyon fault is considered active. According to State of California definitions, active faults have a documented history of slip within the past 11,000 years of geologic time (the Holocene epoch), and potentially active faults have slipped within the past 1.8 million years (the Quaternary period).

Recent studies of the Rose Canyon fault zone, including offshore extensions northwest of La Jolla and south into San Diego Bay, have shown this fault system is active. In addition, several other faults in the offshore region west and south of San Diego, including the Coronado Banks and San Diego Trough faults, show evidence of Holocene and late Pleistocene displacement (i.e., displacement has occurred in sediments that are less that about 128,000 years old).

The San Diego metropolitan area and adjacent offshore area are characterized by a low to moderate rate of historical seismicity, in comparison to the higher rates of seismicity and larger historical earthquakes characteristic of the Los Angeles and San Francisco Bay regions. No large-magnitude (6+) earthquakes have occurred in the San Diego area during historical time. However, several historical earthquakes reportedly have produced moderate levels of ground shaking and minor damage in the San Diego area.

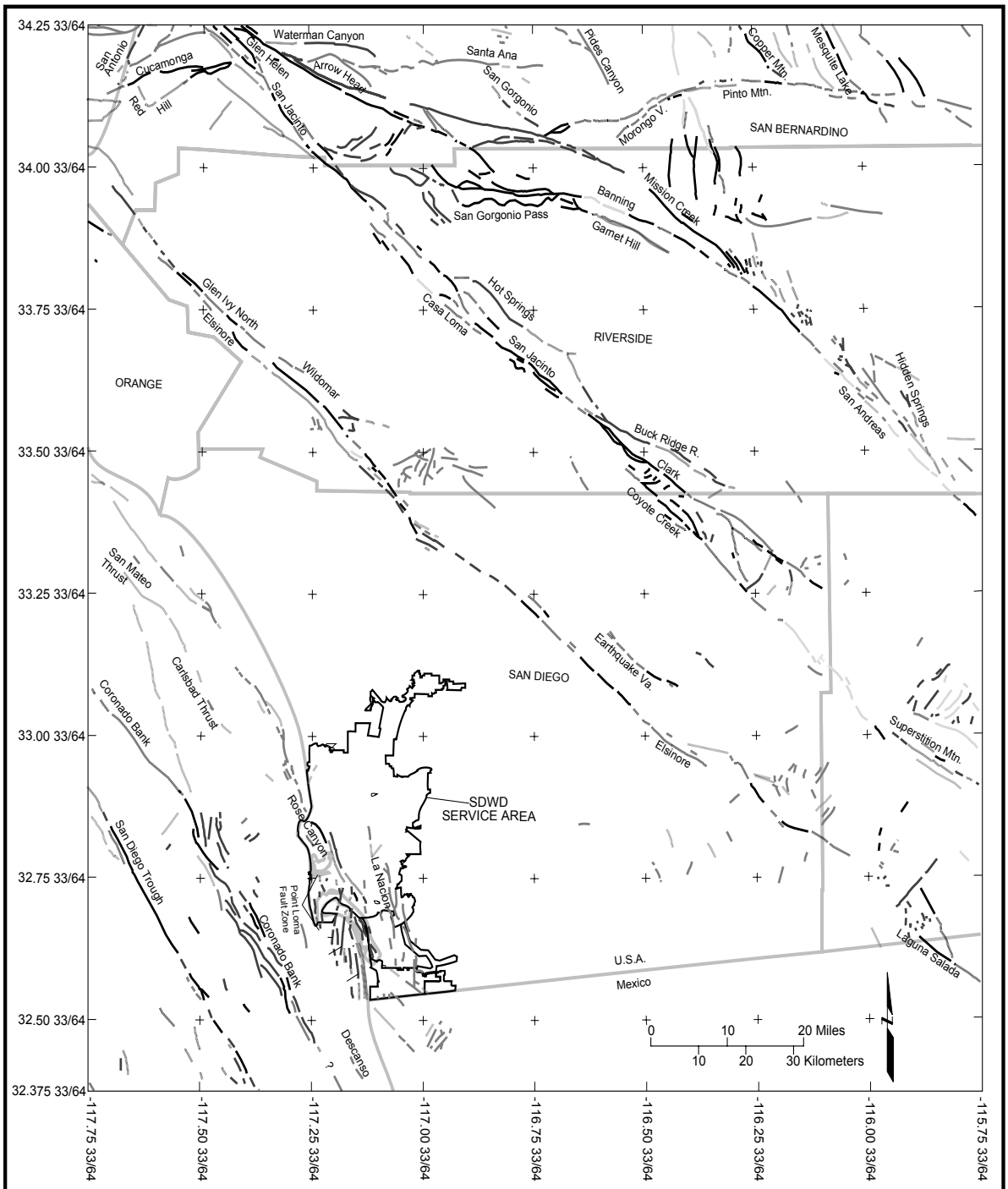

EXPLANATION

COUNTY BOUNDARY

FAULT TRACES ON LAND SHOWN AS SOLID WHERE WELL LOCATED, DASHED WHERE UNCERTAIN OR INFERRED, DOTTED WHERE BURIED. DATA FROM (1994).

A - SPANISH BIGHT FAULT
B - CORONADO FAULT
C - SILVER STRAND FAULT

FAULT RECENCY CLASSIFICATION

FAULTS THAT DISPLACE HOLOCENE (~ 11 ka) OR LATEST PLEISTOCENE (~ 20 ka) DEPOSITS OR GEOMORPHIC SURFACES.

FAULTS THAT DISPLACE LATE QUATERNARY (~ 780 ka) DEPOSITS OR GEOMORPHIC SURFACES.

QUATERNARY FAULTS (1.8 Ma).

NOTE: MAP PROJECTION IS UTM ZONE 11, NAD27

Figure 8-1. REGIONAL FAULT ACTIVITY MAP

8.2.2 Ground Fault Rupture

Ground fault rupture is a primary earthquake hazard. It consists of a direct offset or displacement of the ground surface along the trace of the causative earthquake fault, with consideration for potential ground deformations near the fault offset. Offsets produced by ground fault rupture can occur vertically (thrust or normal fault), where the ground on one side of the fault rises abruptly relative to the other side; or horizontally (strike-slip), where the ground on one side of the fault shifts abruptly right or left relative to the other side. Combinations of these movements are also possible.

Ground fault rupture can be extremely disruptive of improvements on a site. The best mitigation measure for ground fault rupture is not to build across the traces of known active faults, although this is generally not practical for pipeline systems. In some cases it is possible to incorporate design mitigations for ground fault rupture. Typically this requires that the structures be designed with flexibility and that foundations be configured to permit the ground offsets to be accommodated within a well-defined length of the structure; for buried pipelines, fault rupture can be accommodated with suitable ductile design where the pipe accommodates the ground displacements by distributing the resulting forces over a suitable length of pipe. Appropriate design requires careful definition of the probable location, direction, and magnitude of offsets, as well as consideration of the competence of surface soils.

Three known fault zones occur within the SDWD Service Area that could pose a ground fault rupture hazard. They are:

- The Rose Canyon-Silver Strand/Coronado/Spanish Bight fault system
- Point Loma fault zone
- La Nacion fault zone

The traces of these faults are shown on Plate 1 (See Attachment 1 at the end of this chapter). When considering a site within close proximity to the faults/fault systems shown on Plate 1, site-specific geologic investigation may be required to confirm the extent of hazard.

A brief description of each fault/fault system posing a ground fault rupture hazard in the SDWD Service Area is presented below.

A. Rose Canyon-Silver Strand/Coronado/Spanish Bight Fault System

The Rose Canyon fault is a north-northwest-trending right-slip fault that extends from San Diego north through Rose Canyon and La Jolla. The Rose Canyon fault passes offshore at La Jolla, and extends north in the offshore borderland area.

The Rose Canyon fault extends as a series of discontinuous, subparallel fault traces from La Jolla south toward the City of San Diego over a distance of about 18 km. The Rose Canyon fault is inferred to step westward across San Diego Bay to a series of subparallel north-trending faults mapped through Coronado Island and southward along San Diego Bay. These north-trending faults include, from east to west, the Silver Strand, Coronado, and Spanish Bight faults. These faults extend south to the Descanso fault, which is mapped along a north-south trend offshore southwest of Tijuana, Mexico. The Silver Strand fault may represent the most likely southern continuation of the Rose Canyon fault system.

The Rose Canyon fault zone is known to have generated multiple earthquakes with as much as 3 m of horizontal displacement during the Holocene. The fault is expected to generate earthquakes (and surface-fault rupture) in the future.

Recent studies by Kennedy and Clarke [1997] identified active fault traces crossing San Diego Bay at the Coronado Bridge, and coincident with the mapped trace of the Silver Strand fault. These authors also identify active and potentially active fault traces crossing San Diego Bay in the vicinity of the Coronado fault. Although trenching studies of a topographic scarp in Coronado (assumed to represent the location of the Coronado fault) by Artim and Streiff [1981, reported in Treiman, 1993] did not identify evidence of faulting in presumed middle to late Pleistocene deposits, based on the observed late Pleistocene to Holocene fault scarps in the offshore area and the association with possible active fault traces in the downtown area [noted in Treiman, 1993], the Coronado fault zone is considered to be active. The Spanish Bight fault also is considered to be active based on the presence of late Pleistocene to Holocene fault scarps in the offshore area.

B. Point Loma Fault Zone

The Point Loma fault zone comprises a poorly organized, discontinuous series of north-, north-northwest- and northeast-trending faults mapped from Mission Beach south along the Point Loma Peninsula. The fault zone extends for 30 km or more. There is no evidence that indicates that the fault is active.

It is possible that the Point Loma fault zone is not an independent tectonic structure and does not generate earthquakes. Rather, displacement on strands of the Point Loma fault zone might occur only by triggered slip resulting from a large earthquake on the Rose Canyon and/or Silver Strand/Coronado/Spanish Bight fault system.

C. La Nacion Fault Zone

The La Nacion fault zone comprises a poorly organized, discontinuous series of north- to north-northwest-trending, down-to-the-west normal faults mapped from the State College area south through Chula Vista to the margin of the Tijuana River floodplain. The total length of the fault zone is approximately 26 km, with individual faults as long as 13 km. Although several studies concluded that several primary strands of the La Nacion fault are not active, no detailed assessment of the entire fault zone has been completed. The lack of expression along the fault traces, and other geological evidence, suggests that if the fault is active, the recurrence interval for earthquakes is very long.

Investigators have noted that the La Nacion fault appears to die out at the northern and southern limits of San Diego Bay, indicating there may be a causative relationship between subsidence in San Diego Bay and slip on the La Nacion fault zone. It has been suggested that displacement might occur on strands of the La Nacion fault zone only as triggered slip during rupture on the Rose Canyon and/or Silver Strand/Coronado/Spanish Bight fault system.

D. Selection of Fault Set Parameters

When a new pipeline must be routed across an active fault (such as the Rose Canyon fault), the pipeline should be designed with recognition that surface faulting may occur. Fault offset hazards to be considered include the primary fault offset, and the zone in which secondary fault offset might occur. An acceptable level of fault-offset displacement is

that based on a 16% chance of exceedence at the particular pipe location, given that a characteristic earthquake on the fault occurs. Lacking site-specific data, it may be reasonable to design a pipe to accommodate a fault offset of the Rose Canyon fault for 5 feet of right-lateral movement, accompanied by 0.5 feet of vertical movement.

8.2.3 Ground Shaking

Ground shaking takes the form of complex vibratory motions in both the horizontal and vertical directions. The amplitude, duration, and frequency content of ground shaking experienced at a specific site in an individual earthquake are highly dependent on several factors, including: the magnitude of the earthquake, the fault rupture characteristics, the distance of the fault rupture from the site, and the types and distributions of soils beneath the site.

Large-magnitude earthquakes produce stronger ground shaking than small-magnitude events. Sites located close to the zone of fault rupture typically experience stronger motion than similar sites located farther away. Site soils have the capability to amplify ground motion in certain frequency ranges and to dampen ground motion within other frequency ranges. Soft soils will produce larger response for long-period structures than will firm soils.

For purposes of engineering design, the effect of ground motion on structures at a site is most often characterized by an elastic acceleration response spectrum. This is a plot of spectral acceleration response (S_a) against structural natural period (or frequency) of vibration. A site's earthquake response spectrum can be developed by using standardized building code approaches (such as the 1997 Uniform Building Code or 2000 International Building Code) or using site-specific hazard evaluations. For many evaluations, standardized building code approaches are sufficient. At the time this document was prepared, the 1997 Uniform Building Code (UBC) was the approach adopted by the City for evaluating and designing structures. A successor to the 1997 UBC code may be the 2000 International Building Code (IBC); the 2000 IBC is not yet adopted by the City of San Diego.

The approaches prescribed by the 1997 UBC and 2000 IBC for developing an earthquake response spectrum are similar. Both recognize the effects of fault-to-site distance and of site ground conditions on the magnitude and shape of the response spectrum. The 2000 IBC spectrum was developed using maps of parameters based on the results of regional seismic hazard evaluations. The results of regional evaluations are believed to more reasonably account for the characteristics of the earthquake faults and the attenuation of earthquake ground motions with distance. In general, for the SDWD Service Area, parameters used to develop response spectra from the 1997 UBC and 2000 IBC approaches are comparable; however, the default level of ground shaking (that is, if no site specific ground motion is calculated) for the 1997 UBC approach is somewhat more conservative (i.e., higher) than the 2000 IBC for short-period ground motions for the east side of the SDWD Service Area, which is farther from the active Rose Canyon fault zone, and is more conservative throughout the Service Area for long-period ground motions.

Because the 2000 IBC has not been adopted by the City, the approach to constructing earthquake response spectra for design and analyses of facilities outlined in this standard closely follows the 1997 UBC. Tables 8-2 through 8-6 and Figures 8-2 through 8-5 presented below were developed specifically for the SDWD Service Area and are based on the 1997 UBC.

Figure 8-2 (same as Figure 16-3 in the 1997 UBC) presents a standardized response spectrum (5% damping) intended for general design use. Using appropriate factors, the spectrum can be adjusted to represent the characteristics of ground shaking expected at average sites with geologic conditions that range from rock (Soil Profile Type S_A), to soft soils (Soil Profile Type S_E). The standard spectrum is adjusted to a level consistent with local site conditions, the distance to the fault(s) likely to cause the most severe earthquake shaking at the site, and the seismic source type. Tables 8-2 through 8-6 provide the various factors needed to construct the response spectrum. The 5% damped spectra may be used for all structures, except for reservoir and tank structures; for these structures, design spectra for 2% and 0.5% damping shall be used for the impulsive and convective (sloshing) modes of response, respectively. In lieu of more sophisticated procedures, 2% and 0.5% spectra may be derived from a 5% spectrum using procedures by multiplying the 5% damped spectra by the period-dependent factors in Table 8-7. The factors in Table 8-7 are from MCEER [2000] and are based on empirical studies of the variation of elastic response spectra amplitudes with damping ration (e.g., Newmark and Hall [1982], Abrahamson [1993] and Idriss [1993]). The factors for 0.5% damping are based on Newmark and Hall [1982].

Plate 2 (see Attachment 2 located at the end of this chapter.) shows the near-source zones for the two known active faults in (or in the vicinity of) the SDWD Service Area that are recognized by the California Division of Mines and Geology in maps used in conjunction with the 1997 UBC. The known active faults are the Rose Canyon fault zone and the offshore Coronado Banks (also sometimes called the Palo Verdes) fault. Both are "B" type faults. The Coronado Banks fault is shown for completeness: response spectra developed using the near-source factors appropriate for the Coronado Banks fault do not control the ground shaking hazard in the SDWD Service Area.

A modification of the UBC near-source zones for the Rose Canyon fault is shown on Plate 2. This modification consists of extending the zones to the south to include the Silver Strand fault within San Diego Bay and offshore to the west. The extension of the zone is intended to account for recently published data that indicate the Silver Strand fault is active. An earthquake on the Silver Strand fault could most strongly impact the southern portion of the SDWD Service Area. This Seismic Criteria Document requires the use of the southerly-extended zone of the Rose Canyon fault to develop a response spectrum for a site in the southern portion of the SDWD Service Area, unless it is otherwise justified that the faults in this area are not active. It should be noted that the additional fault traces south of the active Rose Canyon fault were not included in the seismic hazard evaluation used to develop the earthquake parameters in 2000 IBC. However, it is possible that these active faults will be incorporated into the seismic hazard model for future codes (e.g., 2003 IBC or 2005 ASCE-7).

Figure 8-2
Design Response Spectrum

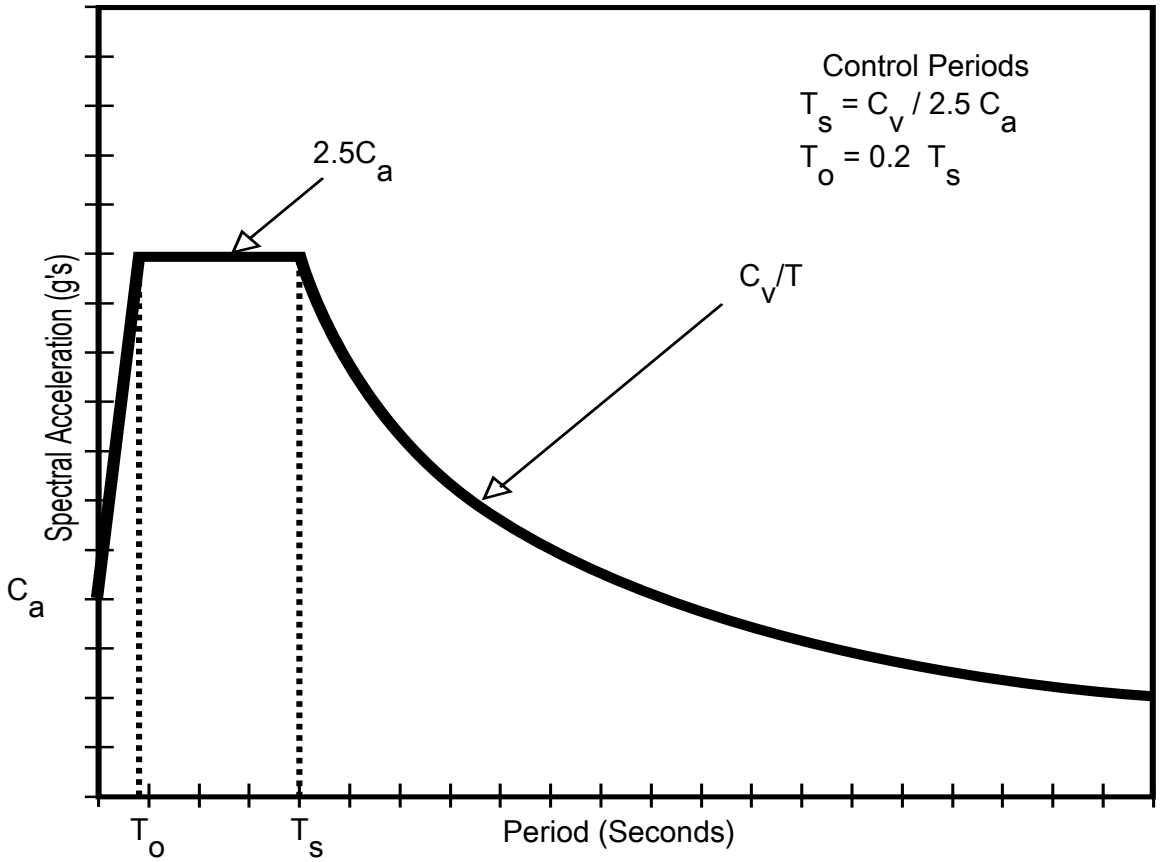

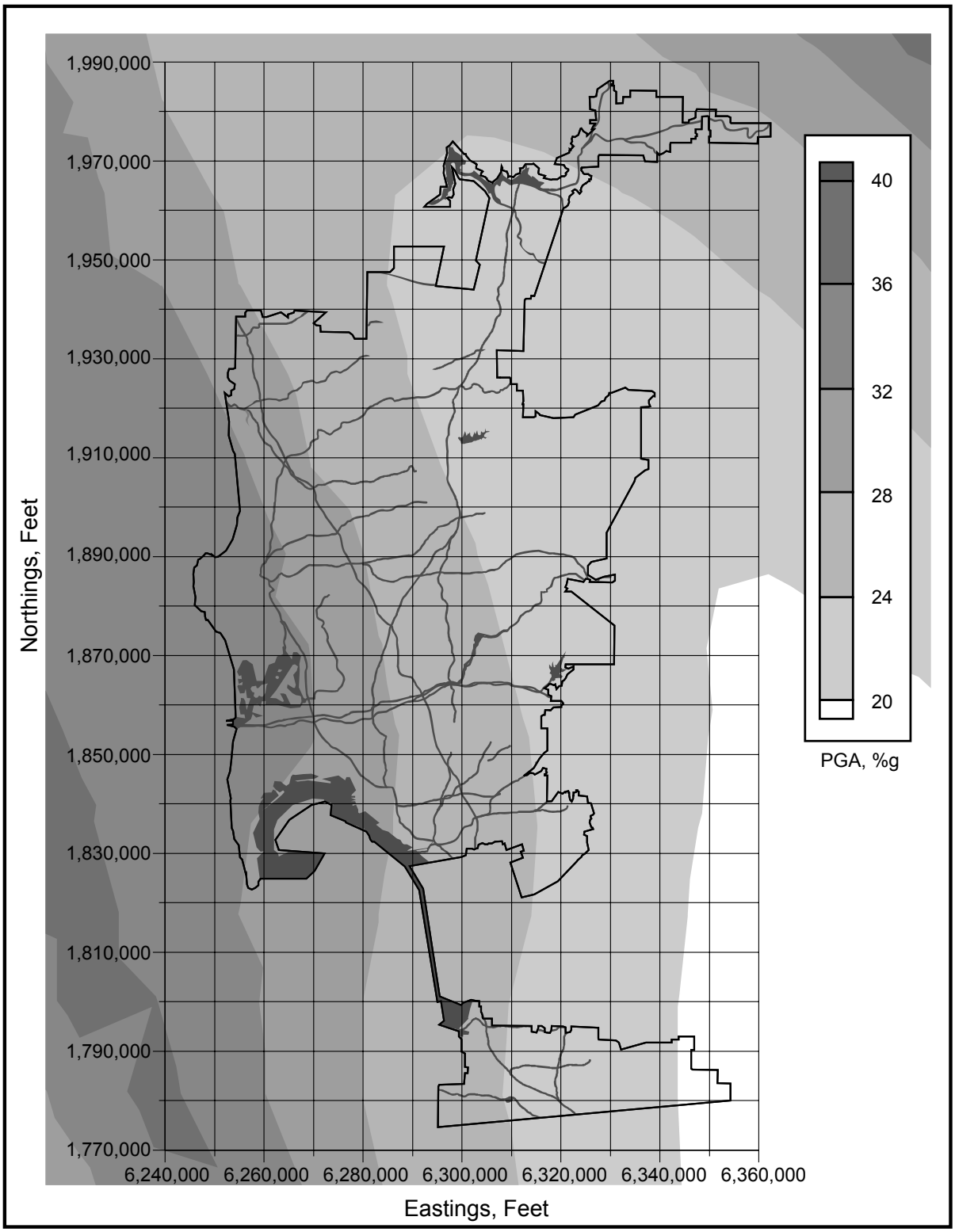

Figure 8-3. Peak Ground Acceleration (Rock)
10% Chance of Exceedence in 50 Years
(Return Period 475 Years)

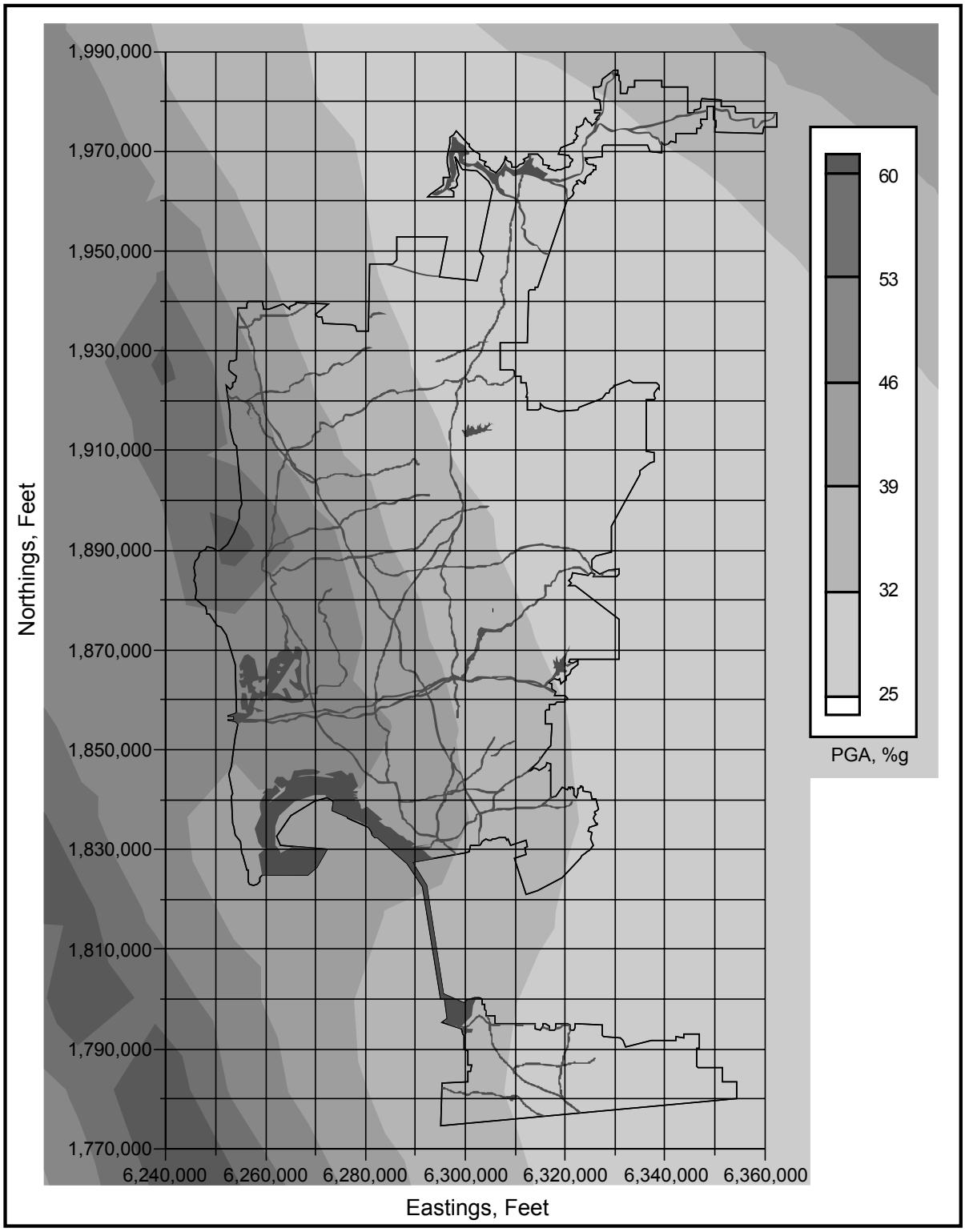

Figure 8-4. Peak Ground Acceleration (Rock)
5% Chance of Exceedence in 50 Years
(Return Period 1,000 Years)

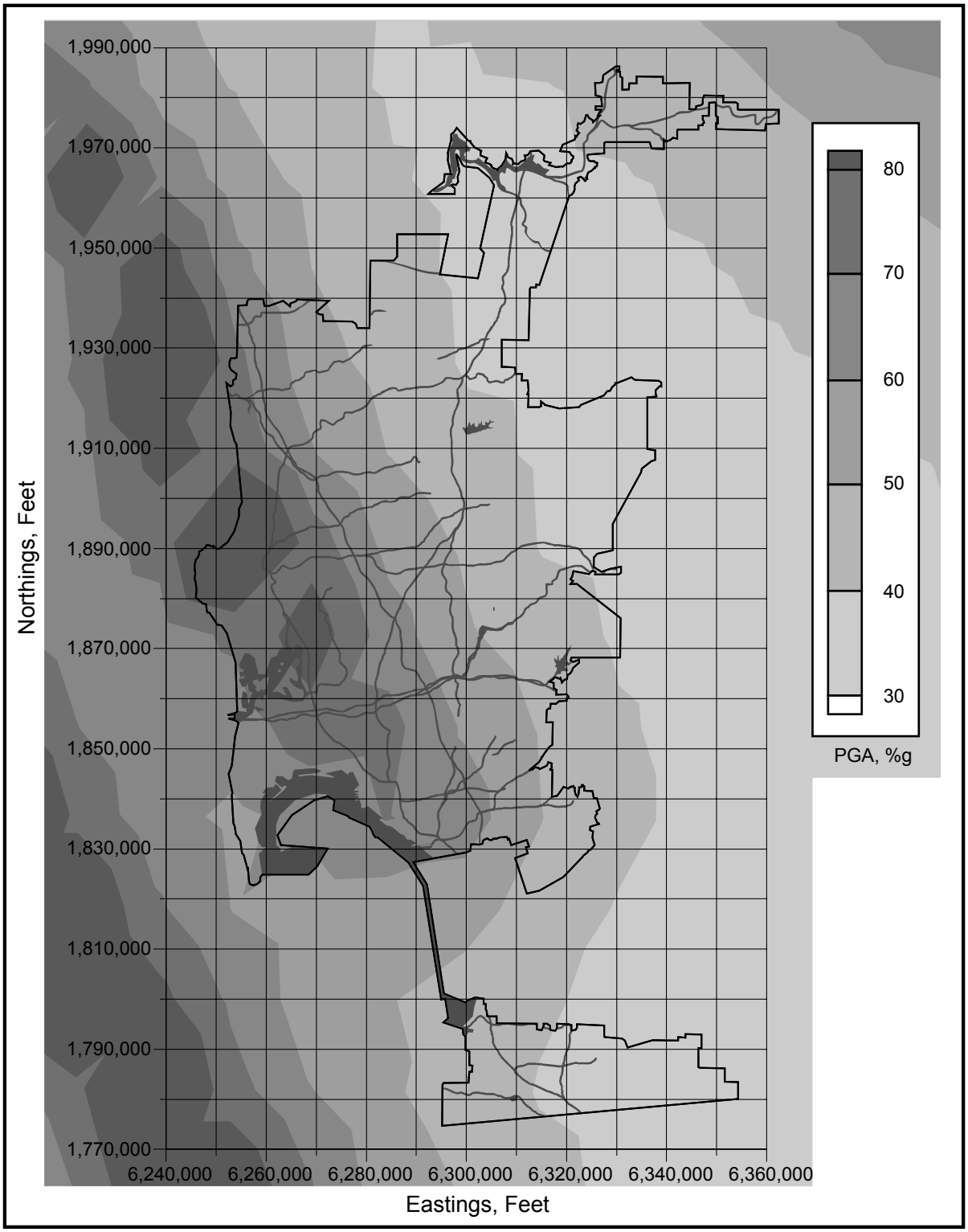

Figure 8-5. Peak Ground Acceleration (Rock)
2% Chance of Exceedence in 50 Years
(Return Period 2,500 Years)

In cases where a site-specific analysis is used to develop response spectra, the overall objective is to develop ground motions that are more accurate for the local seismic and site conditions than can be determined from the general procedure described using Figure 8-2 and Tables 8-2 through 8-6. Site-specific studies should be comprehensive and incorporate current scientific interpretations for seismic sources and ground motion attenuation. Because there are typically scientifically credible alternatives for models and parameter values used to characterize seismic sources and ground motions, it is important to incorporate these uncertainties in a site specific probabilistic analysis using a logic tree or equivalent method of analysis. Examples of such scientific uncertainties include seismic source location, extent and geometry; maximum earthquake magnitude; earthquake recurrence rate; and ground motion attenuation relationships. Where analyses to determine soil amplifications are required by Table 8-2 for S_F soil profiles, the influence of the local soil conditions should be determined based on site-specific geotechnical investigations and dynamic site response analyses; and the site-specific analysis should be documented.

Figures 8-3, 8-4 and 8-5 represent the results of site-specific studies for the San Diego area, prepared by the United States Geologic Survey. These figures are the basis of the 1997 UBC and 2000 IBC. These figures represent the expected peak ground accelerations at locations on assumed rock / soft rock interface (soil profile B/C) with recurrence intervals of 475 years, 1,000 years and 2,500 years, respectively. These figures do not include increased seismicity for the Silver Strand fault that may be considered in the 2003 IBC; nor do they include site-specific soil profiles (such as for soil profiles type S_C or S_D or S_E).

Unless otherwise adopted by the City of San Diego, no new structure that may be used for human occupation, or which provides an essential function for the continued operation or post-earthquake recovery of the water system, should be designed for a site specific ground motion with a recurrence interval less than 475 years (that is, a 10% chance of exceedence in 50 years). It is the intent of the importance factor I to provide for higher levels of reliability for Important (I=1.25) and Critical (I=1.5) facilities. Designs based on site-specific ground motions for longer recurrence intervals (for example, 2/3 of the ground motions for a 2,500 year return period earthquake) are not required unless authorized by the engineer.

As an alternative to using site specific probabilistic ground motions from the 1997 UBC, 2000 IBC, and Figures 8-3, 8-4 and 8-5, any facility in the water system may be designed using site specific deterministic ground motions. Deterministic ground motions shall be established by evaluating the median plus one standard deviation (same as 84th non-exceedence) level ground motion at the site, considering local soil conditions, for each credible earthquake source. Credible earthquake sources include the Rose Canyon, Silver Strand, Coronado Banks and Elsinore faults. Maximum credible moment magnitudes shall be assigned to each credible earthquake source. Based on current knowledge, the maximum credible moment magnitudes for these sources are M 7.2, M 7.2, M 7.2 and M 7.4 for the Rose Canyon, Silver Strand, Coronado Banks and Elsinore faults, respectively.

Following are the acceptable methods for selecting a design basis site-specific ground motion:

1. 1997 UBC, using Figure 8-2, Tables 8-1 though 8-5 and Plate 2 for Near Source Zones inclusive of the southern extension of the Rose Canyon fault.

2. 10% in 50 years (475 year return period earthquake). A site-specific analysis is required for soil sites, and should be done if information not otherwise included in the mid-1990s USGS analysis (Figure 8-3) is important enough to be incorporated into

the design. The design base shear (and all other corresponding seismic forces, moments, and motions) for any structure, system or component may not be less than 80% of that which would be determined using method 1.

3. Deterministic approach, as described above. This approach will yield the most conservative site-specific ground motions that are credible.

The City of San Diego may adopt a future code (such as the IBC 2000), which is based on 2/3 of the 2,500 year earthquake rather than on a 475 year earthquake. The procedure to determine the design spectral response accelerations outlined in the IBC 2000 section 1615.1 may be used, with accommodation to consider that the Silver Strand fault segment is considered active.

When required by this document, vertical response spectra may be taken as 2/3 of the horizontal response spectra except in the near-source zone. If vertical response spectra are required for design of facilities in the near-source zone, they should be developed by site-specific study. The vertical response spectrum may be greater than 2/3 of the horizontal spectra within near-source zones for periods less than 1 second. A vertical response spectra may be calculated on a site specific basis, but shall be not less than 1/2 of the horizontal spectra for that site at any period.

Table 8-2
Soil Profile Types

Soil Profile Type	Soil Profile Name / Generic Description	Average Soil Properties for Top 100 Feet (30.5m) of Soil Profile		
		Shear Wave Velocity, V_s, feet/second (m/s)	Standard Penetration Test N_1 or N_{ch} for Cohesionless soil layers (blows / foot)	Undrained Shear Strength, s_u psf (kPa)
S_A	Hard Rock	> 5000 (1,500)	--	--
S_B	Rock	2,500 to 5,000 (760 to 1,500)		
S_C	Very Dense Soil and Soft Rock	1,200 to 2,500 (360 to 760)	> 50	> 2,000 (100)
S_D	Stiff Soil Profile	600 to 1,200 (180 to 360)	15 to 50	1,000 to 2,000 (50 to 100)
S_E	Soft Soil Profile	< 600 (180)	< 15	< 1,000 (50)
S_F	Soil Requiring Site Specific Evaluations[2]			

Notes

1. Soil Profile Type S_E also includes any soil profile with more than 10 feet (3.05 m) of soft clay defined as a soil with a plasticity index, PI > 20, w_{pc} > 40 percent, and s_u < 500 psf (24 kPa). The Plasticity Index, PI, and the moisture content, w_{mr} shall be determined in accordance with approved national standards.

2. Soil Profile Type S_F is defined as soils requiring site-specific evaluation as follows:

   - Soils vulnerable to potential failure or collapse under seismic loading such as liquefiable soils, quick and highly sensitive clays, and collapsible weakly cemented soils.
   - Peats and/or highly organic clays, where the thickness of peat or highly organic exceeds 10 feet (3.05 m).
   - Very high plasticity clays with a plasticity index, PI>75, where the depth of clay exceeds 25 feet (7.6 m).
   - Very thick soft/medium stiff clays, where the depth of clay exceeds 120 feet (36.6 m).

Table 8-3
Seismic Coefficient C_a

Soil Profile Type	C_a
S_A	$0.32N_a$
S_B	$0.40N_a$
S_C	$0.40N_a$
S_D	$0.44N_a$
S_E	$0.36N_a$
S_F	See footnote 1

1. Site-specific geotechnical investigation and dynamic site response analysis shall be performed to determine seismic coefficients for Soil Profile Type S_F.

Table 8-4
Seismic Coefficient C_v

Soil Profile Type	C_v
S_A	$0.32N_v$
S_B	$0.40N_v$
S_C	$0.56N_v$
S_D	$0.64N_v$
S_E	$0.96N_v$
S_F	See footnote 1

1. Site-specific geotechnical investigation and dynamic site response analysis shall be performed to determine seismic coefficients for Soil Profile Type S_F.

Table 8-5
Near Source Factor N_a

Seismic Source	Closest Distance to Known Seismic Source[2,3]	
	<= 2 km	>= 5 km
Rose Canyon fault zone and Coronado Banks / Palo Verdes fault	1.3	1.0

1. The Near-Source Factor may be based on the linear interpolation of values for distances other than those shown in the table.

2. The location of seismic sources to be used for design shall be established using Plate 2.

3. The closest distance to seismic source shall be taken as the minimum distance between the site and the area described by the vertical projection of the source on the surface (i.e., surface projection of fault plane). The surface projection need not include portions of the source at depths of 10 km or greater. The largest value of the Near-Source Factor considering all sources shall be used for design.

Table 8-6
Near Source Factor N_v

Seismic Source	Closest Distance to Known Seismic Source[2,3]		
	<= 2 km	5 km	>= 10 km
Rose Canyon fault zone and Coronado Banks / Palo Verdes fault	1.6	1.2	1.0

1. The Near-Source Factor may be based on the linear interpolation of values for distances other than those shown in the table.

2. The location of seismic sources to be used for design shall be established using Plate 2.

3. The closest distance to seismic source shall be taken as the minimum distance between the site and the area described by the vertical projection of the source on the surface (i.e., surface projection of fault plane). The surface projection need not include portions of the source at depths of 10 km or greater. The largest value of the Near-Source Factor considering all sources shall be used for design.

Table 8-7
Damping Adjustment Factors

Period (seconds)	Ratio of Response Spectral Acceleration for Damping Ratio D to Response Spectral Acceleration for D=5%	
	D = 0.5%	D = 2%
0.02	1.00	1.00
0.10	1.81	1.26
0.20	1.81	1.32
0.30	1.81	1.32
0.50	1.81	1.32
0.70	1.81	1.30
1.00	1.78	1.27
2.0	1.68	1.23
4.0	1.48	1.18

8.2.4 Liquefaction-Related Phenomena

A. Liquefaction

Liquefaction is a phenomenon in which loose, saturated, granular soils (silts, sands, and gravels) lose a substantial amount of strength when subjected to intense ground shaking. In the simplest terms, when these soils are strongly shaken they tend to compact and densify. If the soils are saturated, the tendency for densification increases the pore water pressure, softening the soil as a result. Liquefaction can create a quick condition in which the strength and bearing capacity of the soils is temporarily reduced. Also, if the generated pressures become large enough, material can actually be ejected from the ground in characteristic geysers of soil-laden water.

Liquefaction of a site can be highly damaging to aboveground as well as underground structures and utilities. Potential consequences of liquefaction include bearing capacity failure, floatation of lightweight embedded structures, landsliding (lateral spreads and flow slides), and differential settlement. Among these consequences, large permanent ground deformations due to lateral spreads or flow slides are generally considered to be the most significant potential hazards. Structures supported on pile foundations can be more resistant to liquefaction damage than structures supported on shallow foundations, although buried utilities entering such pile-supported structures may be particularly vulnerable unless suitably mitigated. It is possible to reduce the liquefaction potential of a site by a number of means, including: replacement or densification of susceptible soils, drainage (pore water dissipation), or artificially altering the groundwater table.

Relatively high liquefaction-potential areas occur in many parts of the City of San Diego, but are particularly concentrated near the coast and bays. In general, these areas are underlain

by young, unconsolidated alluvial sediments or poorly engineered artificial fill, and have a high (shallow) groundwater table. Typically, these areas have groundwater within about 25 feet of the ground surface. The majority of the high liquefaction-potential areas occur around the margins of Mission and San Diego Bay, where large amounts of artificial fill occur, and near the mouths of major drainages in low-lying coastal areas.

Zones of relatively low to moderate liquefaction potential occur throughout the City of San Diego (Plate 1). These areas generally occupy upland valleys of major drainages that are filled with young alluvial sediments. These areas typically have groundwater levels that fluctuate seasonally. The thickness of the young alluvial sediments in these upland valleys likely varies locally; however, relative to the major drainage channels, these deposits likely are thin. During relatively wet winters, when the water table is high and the young alluvium is partially to fully saturated, the potential for liquefaction in these areas would be greatest. During dryer periods, when the water table is low (i.e., below the elevation of young sediments), these areas have a relatively low potential for liquefaction.

Youd and Perkins [1978] have addressed the liquefaction susceptibility of various soil deposits. Their studies indicate that recently deposited (geologically), relatively unconsolidated soils such as river channel, flood plain, and delta deposits, and uncompacted artificial fills below the groundwater table, have high to very high susceptibility to liquefaction. In the City of San Diego, the most liquefiable soils are found on "made ground" adjacent to the margins of San Diego Bay. These soils are loose sand fills that have been placed in bay waters without compaction.

Any site with a water table within 50 feet of grade and with loose sandy soils should be investigated by a geotechnical engineer to determine the potential for liquefaction, the probable effects on the site, and engineering mitigations that may be incorporated into the design. Plate 1 should be reviewed when making preliminary determinations as to whether liquefaction is a potential hazard at a particular site. Not all liquefaction zones are shown in Plate 1, particularly zones at local streams or other small susceptible zones. Plate 1 shows most areas that are judged to have either a "high" and "low to moderate" potential for soil liquefaction. Sites that fall within the liquefaction zones shown on Plate 1 should be evaluated by a geotechnical engineer. Pipelines that traverse the liquefaction zones shown on Plate 1 should either be relocated, or if this is not feasible, designed in accordance with Section 8.4.

B. Lateral Spreads and Flow Slides

Lateral spreads are ground-failure phenomena that occur on gently sloping ground underlain by liquefied soil. Earthquake shaking generates inertia forces within the slope and induces downslope movement in the liquefiable materials. Temporary instability is manifested by "down slope" movement that can potentially involve large land areas and can range in magnitude from fractions of an inch to several feet. If the site has a significant slope or is adjacent to an open cut (i.e., depressed stream or road bed), liquefaction can cause the soils to move downslope or toward the cut. Lateral spreading is typically accompanied by surface fissures and can be very destructive to facilities situated within the zone of spreading.

Flow slides generally occur in liquefied materials on steeper slopes and occur when the gravitational forces acting on a ground slope exceed the strength of the liquefied material within the slope. Flow slides may involve ground motions of hundreds of feet and consequently can be the most catastrophic liquefaction-related ground phenomenon. The potential for lateral spreads and flow slides at a site should be investigated by the geotechnical engineer concurrently with the investigation of liquefaction.

C. Settlement

Liquefaction will generally produce volume decreases within a soil that are manifested at the ground surface as settlement. Volume changes, typically of smaller magnitude, may also occur in loose unsaturated materials above the groundwater table. Differential settlement may be expected when soil layers vary in thickness and extent over a site. Differential settlement can cause damage to structures and buried pipelines. Differential ground settlement may occur near sand boils due to liquefied materials being removed from depths and brought to the ground surface. Again, structures supported on piles are more resistant to damage than structures on shallow foundations. Utilities and pipelines penetrating basement walls are especially vulnerable. Measures should be taken to provide adequate flexibility and / or ductility at such penetrations. The potential for settlement at a site should be investigated by the geotechnical engineer concurrently with the investigation for liquefaction.

8.2.5 Landsliding

Landsliding occurs when the combination of gravitational and ground shaking-induced inertial forces temporarily exceeds the strength of the earth materials in the slope. Landslides are often triggered by strong ground shaking, particularly in areas close to the causative fault. Any site on or adjacent to a steep slope or bluff should be considered susceptible to landsliding damage. The concern is that a facility may lie within a landslide zone or below a slope whose failure may send debris into the facility.

Landslides commonly are complex features that may consist of both rotational and translational movements in their upper parts, sometimes transforming to debris flows in their lower parts. Water generally plays an important role in landsliding by oversteepening slopes through surface erosion, by increasing pore water pressures, and by adding weight to a soil mass when it is saturated. Other factors that influence landsliding are: (1) strength of the rock/soil material; (2) slope angle; (3) the orientation and density of rock structures, such as bedding, joint, and fault planes; and (4) slope height. Earthquake ground shaking can reduce the stability of a slope and cause sliding or falling of the soil or rock materials composing the slope.

Mapped landslides occur locally throughout the City of San Diego. These landslides have been categorized as "confirmed" or "possible" on Plate 3 (See Attachment 3 located at the end of this chapter.). The majority of these landslides (or possible landslides) occur within the weak sedimentary rocks that underlie most of western San Diego County. Most landslides occur where these rocks have been exposed by westward-flowing stream channels that have broadly dissected the terrace surfaces upon which most of the City lies. The sliding generally is caused by the combined factors of: weak rock, groundwater, steep slope angle, and undercutting of slopes by streams. Many of the confirmed and possible landslides in the City of San Diego occur within older, ancient landslide deposits that have pre-existing zones of weakness.

The City of San Diego also has weak sedimentary rock formations that are known to be landslide-prone. These formations include: Friars Formation; Mission Valley Formation; Otay Formation; Del Mar Formation; Ardath Shale; and Point Loma Formation. Of these, the Friars, Mission Valley, and Otay Formations, along with the Ardath Shale, are the most extensively exposed in the City of San Diego. Depending upon their local structural characteristics, the Friars Formation and the Ardath Shale have been subdivided into “favorable” and “unfavorable” stability categories, as shown on Plate 3.

Finally, the stability of the areas adjacent to coastal bluffs has been categorized as "generally unstable" or "moderately stable," as indicated on Plate 3.

The landslide hazard areas shown on Plate 3 can be used initially to screen/evaluate facility site hazards. Not all landslide hazards are shown in Plate 3. The potential for landslides at hillside sites, or sites adjacent to steep slopes, bluffs, and/or cuts, should be addressed by a geotechnical engineer and engineering geologist. If necessary, recommendations for mitigating the effects of potential landslides should be provided. Mitigations can include the construction of buttress fills, retaining walls, or debris basins and provision of sufficient set-back from unstable slopes.

8.2.6 Seiches and Tsunamis

Seiches are undulations (waves) of the surface of a body of water such as a bay, lake, or reservoir set up by the harmonic interaction of the water body with seismic waves transmitted through the earth's crust. Seiches can be caused by near or distant earthquakes. Seiche waves may reach several feet in height and can be damaging to facilities located at or near the shoreline. However, the occurrence of seiches large enough to cause flooding or damage is not common.

Tsunamis, seismic sea waves, are caused by faulting or other abrupt ground movements on the ocean floor during large earthquakes. In the open ocean, the waves move at high velocities and when they approach a shoreline, the slope can raise them to heights as high as 50 feet. Waves approaching such heights are not believed possible within San Diego Bay.

Design of critical facilities located immediately adjacent to large bodies of water, for example lakes or bays, should include study of the potential for seiches and tsunamis and, if necessary, should incorporate appropriate mitigation measures.

Currently available draft maps prepared for NIST [1994] place San Diego within a zone with maximum expected wave heights of 15 feet. Draft inundation area maps for San Diego have been prepared and are undergoing review as of 2000. Lacking more detailed information at this time, it would be appropriate to consider the potential for tsunami inundation for any SDWD facility located adjacent to the Pacific Ocean or inland bays at elevations of 15 feet or less; for these facilities, contact the Planning and Development Review Department at the City of San Diego for updated information.

8.3 Buildings and Building-Like Structures

8.3.1 Applicability

This section is applicable to buildings and building-like structures, including pipe bridges.

For the purposes of this section, a building is defined as any enclosed or partially enclosed above grade structure which provides for shelter of persons or equipment, and which is occasionally occupied. A building-like structure is any unenclosed above grade structure which has one of the lateral-force-resisting systems defined in Table 16-N of the 1997 UBC, except the following:

- Tanks
- Water retention basins
- Dams and associated facilities under California DSOD jurisdiction

8.3.2 Design Basis

The design of all elements of buildings, including structural elements of the lateral-force-resisting system, structural elements not part of the lateral-force-resisting system and non-structural elements shall as a minimum comply with all applicable sections of the 1997 UBC. Note that 1997 UBC forces are strength design seismic forces, whereas the 1994 UBC forces are working stress design forces. Performance aspects such as vertical deflections at service level loads shall be evaluated where necessary to ensure appropriate performance. In addition, the requirements of this document shall apply.

8.3.3 Design Force Levels

A. Lateral Force Procedure

Buildings and building-like structures may be designed using either the Static Force Procedure (1629.8.3) or the Dynamic Force Procedure (1629.8.4) of the 1997 UBC. The Dynamic Force Procedure shall be utilized when any of the following apply:

- Structure has a stiffness, weight or geometric vertical irregularity of Type 1, 2 or 3, per UBC Table 16-L or Type 1 per UBC Table 16-M.
- Structure is on an S_F site and has a period in excess of 1 second.

Earthquake forces determined under the 1997 UBC should be scaled by a factor of 1/1.4 to account for the working stress level used for timber design. This same reduction is appropriate wherever working stresses are used, per 1997 UBC Section 1612.3.

Alternative lateral force procedures may be used, per section 1629.10 of the 1997 UBC code.

B. Design Force Levels

Structures designed using the Static Force Procedure shall be proportioned to resist a minimum base shear according to Section 1630.2.1 of the 1997 UBC with the importance factor I defined in Table 8-1.

8.3.4 Special Detailing Requirements

In addition to the applicable detailing requirements of the 1997 UBC, the following shall apply.

A. Timber Structures

1. The provisions of the 1997 UBC Section 2320 – Conventional Light-Frame Construction, shall not be used to satisfy the requirements for a lateral-force-resisting system.

2. The following construction shall not be used as elements of the lateral-force-resisting systems for buildings:

- Diagonally or straight sheathed timber diaphragms or shear walls
- Gypsum board diaphragms or shear walls
- Shear walls constructed of metal studs with diagonal strap braces
- Braced shear panels consisting of let-in braces
- Oriented Strand Board (OSB) shall not be used in applications subject to high moisture conditions or if it will be exposed to inclement weather during construction

3. Wood diaphragms shall be provided with continuous chord elements at the perimeter of the diaphragm. Where chords change direction (e.g., T or L shaped structures) and for wall anchorage of concrete and masonry structures, local collector elements shall develop the resulting secondary forces into the main diaphragm or into a sub-diaphragm, meeting the required span/depth requirements, which spans between continuous collectors in the main diaphragm.

4. Wood diaphragms and shear walls shall be provided with local chords around all penetrations exceeding 2 feet in dimension. Chords shall be designed to develop the secondary forces due to flexure in the diaphragm. They shall extend a minimum of 2 feet beyond the edge of the opening of each direction. A recommended procedure can be found in [Diekmann].

5. Requirements for panel field and edge nailing, nailing to chords, collectors, splices in members, and similar connections shall be clearly called out on the design drawings.

6. Joists and rafters framing horizontal diaphragms shall be solidly blocked here bearing on shear walls or other vertical elements of the lateral-force-resisting system. Shear transfer between timber diaphragms and vertical elements of the lateral-force-resisting system shall not be accomplished with toe nails (use framing angles or other means not relying on toe nails).

7. Diaphragms shall be provided with continuous seismic force collectors, capable of resisting both tension and compression at all shear walls or other vertical elements of the lateral-force-resisting system.

8. Shear walls shall whenever practical be continuous from the roof to the foundation. Shear walls at an upper story of a structure shall not terminate on wood framing, unless that framing is designed for omega (1997 UBC Table 16-N) times the required seismic forces.

9. Tensile ties between wood framing elements of diaphragms and shear walls shall be designed considering all eccentricities inherent in the connection and resulting from such eccentricities. In particular, posts containing hold down devices shall be designed for both bending and direct stresses considering eccentricities and reduction of section due

to bolts or let-ins. Nailing of plywood sheathing shall be detailed to prevent tearing loose of the corner adjacent to the hold down device.

10. All connections of wood framing incorporating bolted connections with metal side plates shall provide for shrinkage and contraction of the wood elements, perpendicular to the wood grain. Malleable iron or cut plate washers should be provided on all bolt heads and nuts bearing against wood members.

B. Reinforced Masonry Structures

1. All masonry structures shall be of reinforced construction.

2. Empirical design of masonry shall not be used (1997 UBC Section 2109).

3. Determination of masonry strength shall be in accordance with 1997 UBC Section 2105.3.2.

4. All hollow unit masonry shall be grouted solid. Running bond or stack bond construction is acceptable.

5. All solid unit masonry shall be multi-wythe running bond construction with fully grouted reinforced cores present between wythes. Wythes of masonry shall be fully bonded to the reinforced cores using wire-type joint reinforcement or other similar mechanical attachment.

6. Special inspection, per 1997 UBC Section 1701 shall be specified for all reinforced masonry construction. Special inspection should include verification of source and strength of masonry units, proportioning and mixing of mortar and grout, placement of reinforcement and embedded items, clean out of grout spaces prior to grouting, and grouting procedures.

C. Reinforced Concrete Structures

1. All concrete construction shall be reinforced. Plain concrete shall not be used.

2. Design of concrete structures shall conform to the applicable provisions of 1997 UBC Section 1921.

3. Critical anchorage to concrete structures for seismic force resistance shall be accomplished by cast-in-place anchors wherever practical. Cast-in-place anchors shall be designed in accordance with the strength design provisions of 1997 UBC Section 1923.2. Drilled-in anchors, either adhesive or mechanical type, shall have ICBO certified permissible values (or otherwise validated by suitable test with allowables set at the average failure loads divided by 4). Drilled-in anchors shall be subject to special inspection, and 25% of all installed anchors should be field tension tested to 160% of their ICBO rated allowable capacities. Anchor design shall, when practical, be controlled

by yielding of the steel anchor as opposed to shear failure of the concrete. If not, anchors shall be designed to have a strength equal to omega (1997 UBC Table 16-N) times the calculated seismic forces (with load factors of unity).

4. Precast concrete elements shall not be used as continuous diaphragms or shear walls unless shear transfer between adjacent units is accomplished through the embedment of dowels from adjacent units in a common cast-in-place joining strip. Precast concrete elements may be used as individual, independent above grade shear walls, when designed for the overturning and shear demands on each panel.

5. Mechanical couplers used to splice reinforcing bars shall be of uniaxial design and shall be certified capable of transferring 125% of the nominal strength of the coupled bars.

6. Reinforcing bar to be welded shall conform to American Society for Testing and Materials (ASTM) Standard A-706, "Specification for Low-Alloy Steel Deformed Bars for Concrete Reinforcement". Stud welded bars shall conform to ASTM Standard A-496, "Specification for Steel Wire, Deformed, for Concrete Reinforcement."

7. Prestressed concrete elements shall be provided with mild steel reinforcement to resist stresses resulting from seismic forces (including vertical) unless pretensioning is designed to resist omega (1997 UBC Table 16-N) times the calculated seismic forces.

D. Steel Structures

1. Design of steel structures shall conform to the applicable requirements of 1997 UBC Sections 2210, 2211, 2212 and 2213, except as modified herein.

2. All moment resisting frames shall be detailed in conformance with special moment frame requirements in the UBC. The requirements of FEMA 267 [1995] shall be used unless otherwise justified by the engineer.

3. Hollow sections (tubes and pipes) used as diagonal braces with thinner walls than that required by 1997 UBC Section 2211.4 (9.2.d) may be utilized if the section is completely filled with cementitious material. The effect of the cementitious fill on section properties (area, section modulus, moment of inertia, radius of gyration) shall otherwise be neglected.

8.3.5 Inspection Criteria

All buildings, building components and equipment necessary for the post-earthquake function of the facility shall be inspected during construction to assure that the construction meets the intent of the design. Inspection of the completed facility should also be performed

to assure that possible seismic interactions between nearby components will not affect functionality of the facility.

8.4 Underground Piping

8.4.1 Failure Mechanisms

Underground piping systems have been frequently damaged in past earthquakes. Failure of piping systems is a significant problem. It can result in loss of pressure, reduction in quality of potable water, draining of local reservoirs, significant infiltration in waste water systems, and for pressurized lines, substantial erosion damage to adjacent land and improvements. The primary causes of underground piping failures are:

Ground failures including liquefaction, lateral spreading, and landsliding. Large deformation of the ground from these effects imposes similar deformation on embedded piping. Failures at points of weakness including joints, tees, air valves, hydrant laterals and similar fittings as well as at connections to structures are common.

Fault ruptures. Underground piping crossing zones of fault rupture are subject to extensive damage. Piping crossing the rupture zone can be subjected to abrupt shears as well as longitudinal tension or compression.

Differential settlement of soils, particularly adjacent to firm soils or structures founded on deep foundations. Essentially, embedded pipe will move with the surrounding soil. If one section of pipe moves due to settlement while adjacent sections are prevented from displacement either due to placement in firm soil or attachment to settlement-resistant structures, damage will occur.

Rigid attachment to flexible structures. Underground piping frequently experiences damage at connections to tanks, buildings, basins, and similar facilities. This damage results from differential movement of the structure, in response to the ground motion, with respect to the ground. Differential movement can occur from sliding, rocking, or flexing of the structure. The pipe which is embedded in the ground will attempt to act as an anchor for the structure and can be severely damaged unless flexibility is provided in the connection.

Response to ground shaking. The shaking felt by observers and structures placed on the ground is a direct result of seismic waves that occur within the ground. Piping embedded in ground which is responding to an earthquake is subjected to shearing, compression, and tension forces corresponding with the waves experienced by the ground. These forces can occasionally lead to failure of weak, corroded or brittle piping components.

Unrestrained joints. Unrestrained piping joints, such as the bell and spigot joints common in certain classes of cast iron pipe, and rubber gasketed joints commonly used for asbestos cement pipe, are a frequent source of failure. As movement occurs in the ground around the pipes, these joints are forced to move, and damage to seals is not uncommon. In areas where gross ground failure occurs, complete disassembly of these joints can occur.

8.4.2 General Design Guidelines

Selection of appropriate routing. The best way to minimize failure potential of underground piping is to avoid routes through areas expected to experience either gross soil failures or ground fault rupture.

During planning/initial screening of possible alignments for a new pipeline or for the initial evaluation of the seismic vulnerability of an existing pipeline, the maps presented on Plates 1 and 3 should be reviewed for the existence of potential hazards. In addition, the planning and design for all new major pipeline projects should include a geologic/geotechnical reconnaissance of the proposed routing.

Selection of appropriate materials. New buried pipes used for transmission or distribution systems should be designed with the following considerations. Note: "good" soils are those locations not in liquefaction, landslide or surface faulting zones. Plates 1 and 3 may be used to indicate soils prone to permanent ground deformations (PGDs), recognizing that a detailed site investigation of such zones may narrow their applicability for a particular pipeline.

- For new small diameter (6" – 10" diameter) installations. In good soil areas, use single lap welded steel pipe; rubber gasketed or mechanical jointed ductile iron; rubber gasketed PVC pipes. For better performance in soils that may be prone to PGDs, use heavy wall butt welded (preferred) or single lap welded steel pipe; fusion bonded high density polyethylene pipe; slip jointed and restrained ductile iron pipe. Corrosion protection is needed for all metal pipe.

- For new large diameter (12" to 24" diameter) installations. In good soil areas, use single lap welded steel pipe; rubber gasketed or mechanical jointed ductile iron, rubber gasketed PVC pipes. For better performance in soils that may be prone to PGDs, use heavy wall butt welded (preferred) or single lap welded steel pipe; fusion bonded high density polyethylene pipe; slip jointed and restrained ductile iron pipe. Corrosion protection is needed for all metal pipe.

- For new transmission (30" diameter and larger) installations. In all soil areas, use butt welded or double lap welded steel pipe. Double lap joints (welds inside and outside) should be designed to be as strong and as the main body of the pipe while allowing up to 4% strain in the pipe. Steel bells shall be formed using an internal anvil or similar; significant cold rolling should be avoided. Heavy wall construction should be used in soils prone to PGDs. Corrosion protection is needed for all metal pipe. Reinforced concrete cylinder pipe may be used with special design only (bell ends should be stronger than the pipe; in soils prone to PGDs, girth joints must be welded inside and outside).

- In-line valves should be located downstream of each major turnout. In-line valves should be located adjacent to and outside of areas of known high potential for PGDs.

- For critical pipelines subject to surface faulting on active faults, and which serve areas without a reliable redundant source of water. These pipelines shall be designed in accordance with Section 8.4.3.

- For critical pipelines that traverse liquefaction or landslide zones, and which serve more than 10,000 people, without a reliable redundant source of water. These pipelines shall be designed to accommodate permanent ground deformations associated with that hazard zone; or the hazard may be mitigated with suitable ground stabilization techniques. Acceptable design strategies include pipe designs for no breakage; and / or designs to use rapidly deployable suitable diameter flex hose with suitable valves and manifold connections on

either side of the hazard zone. The hazard zone shall be established in a rational manner. Valves and branches should not be located within these zones without suitable justification that these appurtenances will not adversely affect pipeline performance. Valves either side of the hazard zone should be designed to close without manual intervention, should pipe failure lead to a credible life safety risk due to erosion or inundation to nearby locations; any such non-manual valves should have a power source that is not dependent on power or natural gas supply from San Diego Gas and Electric. Large diameter pipes which are critical for delivery of fire flows should be designed to reasonably accommodate the hazard zone without failure.

- For critical pipes through landslide zones. Set the pipeline back far enough from the top of unstable slopes as to avoid being included in the probable zone of slippage. Provide measures to stabilize the slope. In some cases, it may be possible to position the pipeline below the potential landslide plane or zone of failure. If landsliding is confined to shallow depths, it may be possible to deepen the trench through the slide area to install the pipe below the zone of potential sliding. For critical pipelines where the zone of landsliding is relatively deep, tunneling beneath the slide should be considered. Pipes that must traverse a landslide can be designed to accommodate some landslide movement by using heavy walled butt welded steel pipes, or other designs that are approved by the engineer.

- Service connections in areas prone to PGDs should be designed to accommodate some flexibility between the service connection and the main pipe.

- Hydrant laterals in areas prone to PGDs should be designed to accommodate some flexibility between the hydrant lateral and the main pipe.

Alternative pipeline materials and pipeline joinery may be used if justified to be adequate for seismic loads by the engineer.

Pipeline types that are particularly susceptible to failure in soils with permanent ground deformations include (roughly from most vulnerable to less vulnerable): fiberglass pipe; cast iron pipe with cemented, lead or caulked joints; screwed fitting steel pipe; asbestos cement pipe with cemented joints; PVC or asbestos cement or cast iron pipe with rubber gasketed joints; reinforced concrete with steel cylinder pipe with rubber gasketed joints; ductile iron or steel pipe with rubber gasketed joints. In addition, any metal pipeline with corrosion is susceptible to failure when exposed to PGDs.
New above ground pipes used for transmission or distribution systems (such as at river or stream crossings), should be designed with the following consideration:

- Above ground piping shall be designed for deadweight, operational, thermal and earthquake load conditions such that essential piping has a very high reliability of remaining functional during and after earthquakes. The three directions of earthquake loads shall be considered simultaneously in the design using a square root of the sum of the squares approach.

<u>Provision of flexibility at transitions</u>. Wherever underground pipe is connected to a structure (tank or building) or equipment (pump station) subject to credible permanent ground

deformations or significant structural movements, or transitions from one subsoil condition to another, it is important to provide for flexibility in the design of the piping to accommodate credible differential ground and structure movements. Flexibility can be provided by:

- Providing oversized sleeves with flexible gaskets at pipe penetrations through building and structure walls.

- Providing flexible couplings in pipe adjacent to rigid connections to structures or equipment.

- Routing piping above grade in areas where extreme differential ground movements are expected, and providing expansion loops in above-grade piping (if feasible) to accommodate expected movements.

8.4.3 Fault Crossing Design Guidelines

The existing pipeline network that makes up the SDWD water distribution system is exposed to failure due to potential fault offsets. In a few instances, the existing pipe network has been installed with valves either side of the fault zone, to "valve out" possible leakage from pipes that cross the fault.

New installations of pipelines that traverse active faults should be designed with the following special provisions.

- An assessment should be made of the area served by the new pipeline, as well as by existing pipelines. If the area served does not have a reliable source of water for fire fighting, available within 8 hours following a major earthquake and capable of lasting for at least 24 hours following a major earthquake, then a fault crossing design should be used for the new pipeline.

- Fault crossing designs are of three basic types: (a) avoid crossing the fault, if practical; (b) design the pipe to accommodate fault offset without failure of the pressure boundary; (c) provide suitable valves and manifolds and bypass pipe to allow rapid restoration of water service across the fault zone, should the pipe break at the fault. A combination of (b) and (c) may be suitable in some instances.

- Pipes that are designed per (b) shall be engineered following the principles for fault offset outlined in [ASCE, 1984]. The pipe route should be configured, whenever practical, so as to cause net tension in the pipe given the fault offset. Fault offset parameters shall be determined in accordance with Section 8.2.2(D). If a butt welded steel pipeline system is used, maximum strains shall be no higher than 5% given the occurrence of a characteristic earthquake. If a double lap welded steel pipe (i.e., welds inside and outside the pipe) is used, the maximum allowable strain shall be no higher than 4% unless otherwise justified. If a single lap welded steel pipe is used, the maximum allowable strain shall be no higher than 1% unless otherwise justified. If wrinkling is predicted to occur, then the maximum strain in the wrinkle shall be no higher than 5% unless otherwise justified.

- Pipes that are designed per I shall include suitable in-line valves either side of the fault zone, spaced far enough apart such as not to significantly increase the chance

of failure of the pipe due to fault offset. The in-line valves may be manually or automatically actuated. Automatic actuation valves are required if the failure of the pipeline at the fault offset will credibly cause a life safety concern to nearby people, or cause enough erosion as to create a significant loss to nearby facilities. Automatic actuation should be based on instrumentation that senses whether the pipeline actually has broken, such as by sudden drops in pressure and increased flow, coupled with very high levels of peak ground acceleration (over 0.3g). Remote operation of any automatic actuation valve may be provided at the engineer's option. Any actuation system shall be capable of operating without reliance of San Diego Gas and Electric power, for at least one full close cycle.

- Pipes that are designed with design feature I but not (b) should include suitable sized bypass manifolds. The bypass manifolds should be sized to accommodate the minimum of 1,000 gpm, the minimum fire flow, or the average winter day demand for the area served by this pipeline. Suitable above ground pipelines (flex hose or pipe) should be available to be installed within 8 hours following a major earthquake, in order to restore fire flows to the area.

- The type of design adopted for a new pipeline (a, b or c) should recognize all the seismic hazards for the area to be served by this pipeline. For example, a fault crossing design will not be effective if the pipe is also likely to fail due to landslide or liquefaction hazards. The area to be considered should be governed by the pressure zone hydraulics and geotechnical hazards of the pipe system serving the area.

- Small diameter distribution pipelines (10 inch diameter and less) may not be designed per options (a), (b) or (c) (i.e., no special fault crossing design) if breakage of the distribution pipeline due to fault offset does not materially impact the post-earthquake performance of the distribution system. If these cases, gate valves shall be included on the distribution pipe within 200 feet either side of the fault zone, and hydrants located just outside these gate valves.

- All new pipelines with nominal diameter of 20 inches and larger (or which serve a population of 10,000 or more people or which serve a critical facility) which cross an active fault shall include either design provisions (b) or (c).

- All new pipelines with nominal diameters of 36 inches and larger which cross an active fault shall include design provision (b) and optionally (c).

- All new pipelines with nominal diameters of 48 inches and larger which cross an active fault shall include design provisions (b) and (c).

- All new pipelines that traverse potentially active fault zones (such as the La Nacion fault zone) may, at the option of the engineer, adopt design options (b) or (c).

8.5 Underground Structures

8.5.1 Loading Criteria

Section 8.5 is applicable to all structures which are either partially or totally embedded in the ground.

In addition to design for load conditions which include dead, live and static earth pressure loadings, embedded structures shall be designed to resist the additional seismic earth pressures specified in Section 8.5.

A. Firm Soil Sites

Past earthquakes have not caused extensive damage to building walls below grade. In some cases, however, it may be advisable to verify the adequacy of retaining walls to resist increased pressure due to seismic loading. These situations might be for walls of poor construction quality, unreinforced or lightly reinforced walls, walls of archaic materials, unusually tall or thin walls, damaged walls, or other conditions implying a sensitivity to increased loads.
The seismic earth pressure acting on a wall retaining non-saturated, level soil above the groundwater table may be approximated as:

$$\Delta p = 0.4 k_h I \gamma_s H_{rw} \qquad \text{[equation 8-1]}$$

where Δp = Additional earth pressure due to seismic shaking, which may be assumed to be a uniform pressure over the height of the wall.

k_h = Horizontal seismic coefficient in the soil, which may be assumed to be equal to C_a (refer to Section 8.2.3; PGA if a site specific ground motion is used).

I = Importance factor I as suitable for this structure from Table 8-1.

γ_s = The total unit saturated weight of the soil

H_{rw} = The height of the wall that is retaining the soil

The seismic earth pressure given by Equation 8-1 should be added to the unfactored static earth pressure to obtain the total earth pressure on the wall. The expression in Equation 8-1 is a conservative approximation of the Seed and Whitman simplified formulation based on the Mononabe-Okabe solution [Seed and Whitman, 1970]. The pressure on walls during earthquakes is a complex action. If walls do not have the apparent capacity to resist the pressures estimated from the above approximate procedures, or further detail for site specific conditions is warranted than provided by Equation 8-1, detailed investigation by a qualified geotechnical engineer is recommended.
In addition to designing walls of the structures for the increased pressures indicated above, the structure as a whole shall be designed to resist sliding as a result of such pressures. Sliding may be resisted by a combination of friction beneath the base of the structure and by soil bearing against the opposite wall of the structure, if embedded. Such pressures may be assumed to have a triangular pressure distribution, with the resultant located at 1/3 the depth of the backfill above the base of the structure on the resisting side. If excessive movement that could functionally damage the structure is needed to mobilize the full passive resistance of soil bearing against the walls, then only a portion of the passive pressure resistance should be relied upon.

B. Soft Soil Sites and Liquefiable Sites

Important and standard structures embedded in soils subject to liquefaction,

or in unconfined silts, poorly consolidated clays or other soft materials shall be designed for the most severe of the following two conditions:

- At-rest earth pressures (depending on condition of restraint) acting on all sides of the structure, together with the seismic earth pressure of Equation 8-1 acting on one side of the structure.

- For soils predicted to liquefy, static pressures due to liquefied soil acting on all sides of the structure.

Critical structures embedded in these soils shall be designed for dynamic earth pressures based on site specific geotechnical investigation.

All embedded structures located on sites subjected to liquefaction shall be investigated for potential buoyant effects.

8.5.2 Detailing

Detailing of embedded structures shall conform to that required by UBC Section 1921 and Section 8.3.4I. All dowels across construction joints in embedded structures shall be fully developed by embedment or mechanical anchorage on either side of the joint.

8.6 Water Retention Structures

8.6.1 Flat Bottom Steel Tanks and Standpipes

A reference source on the seismic behavior of tanks is [ASCE, 1984]. A treatment of the influence of anchorage on computed overturning moments and buckling allowables is provided in [Haroun, 1999].

Flat bottom steel tanks and standpipes shall be anchored and provided with fixed steel roofs. The tanks shall be designed in accordance with the latest edition of AWWA D-100, including the modifications herein.

- Tanks shall be anchored and have fixed steel or aluminum roofs.

- Tanks shall be designated as either Important or Critical facilities.

- The use factor, I, shall be taken from Table 8-1.

- The zone coefficient, Z, shall be replaced by the UBC seismic coefficient C_a (Table 8-3), or by a suitable PGA value from a site specific ground motion. The site amplification factors, S, shall be taken as 1.0, unless a site investigation finds that the site is not likely to be characterized as a S_A or S_B site per Table 8-2; in which case S may be taken from Table 27 of AWWA D100 or a site specific ground motion spectra may be developed to establish the PGA for the site, in consideration of local soil conditions.

- A site specific response spectrum may be used to characterize local seismic conditions (D100-96 sections 13.3.3.2.3 and 13.4; D103-97 sections 12.3.2.3 and 12.4) with the following modification.

  - The mean recurrence interval shall be 475 years (10% probability of exceedence in 50 years) and the reduction factor R_F shall be R_W. The seismic base shear (and corresponding moment and motions) of a tank which is developed on a site specific response spectrum based on a 10% probability of exceedence in 50 years may not be less than 80% of that which would be determined used Method 1 in paragraph 8.2.3.

- Design shall include vertical earthquake acceleration effects wherever indicated in D100-96 or D103-97. The vertical stress in the tank shell shall include vertical acceleration effects. Shell buckling shall be checked by increasing the weight of the tank shell and the tributary roof on the shell by the vertical acceleration.

- Anchor bolts shall be spaced equally around the circumference of the tank. Bolts shall be designed for a tensile load using AWWA methods (D100-96, eqn. 13-19; D103-97, eqn. 27) except that the dead load shall be reduced by the vertical acceleration. Maximum spacing of anchor bolts shall be 20 feet. Each tank over 100,000 gallons shall have a minimum of 12 bolts. Minimum size of anchor bolts is 0.75 inch diameter. Threads in anchor bolts will be designed such that failure of the bolt in the threads does not occur before general yielding up to 2% strain in the bolt.

- Attachments of anchor bolts to tank shell and embedment in footing shall be capable of developing the tension yield force of the bolt.

- The effect of internal liquid pressure shall not be used to increase permissible buckling stresses on the shell for unanchored tanks, as permitted by D100-96, Section 13.3.3.7.4.

- Critical piping connected to sides of tanks shall be designed to accommodate 2 inches of uplift movement of the tank shell without severe damage or uncontrolled loss of contents. This amount of movement may be increased if the tank is unanchored or if the available anchorage system might still allow some amount of uplift under the design earthquake, when evaluated using $R_w = 1$. It is preferable that piping connected to the floor of the tank be located outside the zone of uplift identified by D100-96 (or D103-97) for unanchored tanks. If this is not possible, piping connected to the floor of the tank, which is within the “uplift” zone (of an equivalent unanchored tank), shall be designed assuming that 2 inches of uplift occurs at the tank wall (12 inches if the tank is unanchored).

- Frictional resistance shall not be used to reduce the unbraced distance in designing roof members as permitted by D100-96, Section 3.6.

- Interior columns supporting the roof shall be designed with a maximum slenderness ratio (length/radius of gyration) of 120 instead of 175 as permitted by D100-96, Section 3.4.

- In addition to the requirements of D100-96 Section 13.6 (or D103-97 section 12.6), tank foundations shall be designed to resist sliding and overturning due to seismic forces. The overall stability against sliding and overturning shall be achieved with a safety factor of 1.1 (sliding) or 1.5 (overturning) or greater. Vertical accelerations need not be included in the calculation of overall sliding and overturning stability. The one-third increase in allowable stress permitted in D100-96 applies only to soil bearing stresses under the combined maximum load case of seismic and gravity loads acting simultaneously.

A. Base Shear and Overturning Moment

In lieu of AWWA Equations 13-4 and 13-8 for calculation of base shear and overturning moment, substitute the following:

$$V = \frac{S_{ai} I}{R_w}\left(W_s + W_r + W_1\right) + S_{ac} I W_2 \qquad \text{[equation 8-2]}$$

$$M = \frac{S_{ai} I}{R_w}\left(W_s X_s + W_r H_t + W_1 X_1\right) + \frac{S_{ac} I}{1} W_2 X_2 \qquad \text{[equation 8-3]}$$

where R_w shall be taken as 4.5.

S_{ai} = spectral acceleration of the first impulsive mode at 2% damping. Higher damping can be used if justified based on tank-specific analysis; this may be appropriate for soil sites.

S_{ac} = spectral acceleration of the first convective mode, at 0.5% damping

W_s = weight of tank shell, lbs

X_s = height from bottom of tank shell to the center of gravity of the shell, ft

W_r = weight of the tank roof plus permanent loads if any, lbs

H_t = total height of tank shell, ft

W_1 = weight of effective mass of tank contents that moves in unison with the tank shell per AWWA D-100 Sec. 13.3.3.2 – lbs

X_1 = height from the bottom of the tank to the centroid of lateral force applied to W_1 per AWWA D-100 Sec. 13.3.3.2 – ft

W_2 = weight of effective mass of tank contents that moves in the first sloshing mode, per AWWA D-100 Sec. 13.3.3.2 – lbs

X_2 = height from the bottom of the tank shell to the centroid of lateral force applied to W_2 per AWWA D-100 Sec. 13.3.3.2 – ft

and S_{ai} and S_{ac} are the spectral accelerations of the first impulsive and convective (sloshing) modes, using site specific response spectra with 2% and 0.5% damping, respectively. The period for the impulsive mode may be calculated using Equation 7-52 and Figure 7.18 of [ASCE, 1984]. It can be determined from the site-specific or UBC default response spectra adjusted for 2% damping. For a steel tank containing water, the equation for the period for the impulsive mode is as follows:

$$T_i = \frac{H}{2640 C_w} \qquad \text{[equation 8-4]}$$

where C_w is obtained from Figure 7-18 of [ASCE, 1984].

In lieu of calculating the period for the impulsive mode, S_{ai} may conservatively be taken as the peak response acceleration on the site-specific response spectrum.

The period of the convective mode shall be calculated in accordance with AWWA D-100, Equation 13-7. Where a site specific response spectrum curve has not been developed for the site, S_{ac} may be taken as:

$$S_{ac} = C_a C_c \qquad \text{[equation 8-5]}$$

where

$$C_s = {3S}/{T_w} \; when \; T_w < 4.5 \, seconds$$
$$C_s = {13.5S}/{T_w^2} \; when \; T_w \geq 4.5 \, seconds \qquad \text{[equation 8-6]}$$

Note that the base shear and overturning moment determined by Equations 8-2 and 8-3 is that applied to the shell. The effects of the weight of the bottom of the tank shell shall be included in a rational manner. The tank foundation is subjected to an additional moment due to the lateral displacement of the tanks contents as discussed in [Wozniak and Mitchell]. This may need to be considered in the design of some foundations such as pile-supported concrete or slabs.

B. Hydrodynamic Seismic Hoop Tensile Stress

Seismic hoop tensile stress shall be determined in accordance with AWWA D-100, Equations 13-21 to 13-24, (D103-97, eqns. 28 to 33) as modified herein. Vertical acceleration shall be taken in accordance with Section 8.2.3.

when D/H >= 1.33:

$$N_i = \frac{4.5S_{ai}}{R_w} IGDH\left(\frac{Y}{H} - 0.5\left(\frac{Y}{H}\right)^2\right)\tanh\left(0.866\frac{D}{H}\right)$$ [equation 8-7]

when D/H < 1.33 and Y < 0.75D:

$$N_i = \frac{2.8S_{ai}}{R_w} IGD^2\left(\frac{Y}{0.75D} - 0.5\left(\frac{Y}{0.75D}\right)^2\right)$$ [equation 8-8]

when D/H < 1.33 and Y>= 0.75D:

$$N_i = \frac{1.4S_{ai}}{R_w} IGD^2$$ [equation 8-9]

For all values of D/H:

$$N_c = S_{ac}\frac{IGD^2\cosh\left(3.68\frac{H-Y}{D}\right)}{\cosh\left(3.68\frac{H}{D}\right)}$$ [equation 8-10]

C. Freeboard and Roof Design

Tanks shall be designed with freeboard above normal liquid level as follows:

$$d = 0.42DS_{ac}I$$ [equation 8-11]

If the available freeboard is less then d, then the roof system shall be designed to resist the impact from the sloshing liquid.

8.6.2 Prestressed Concrete Tanks

Prestressed concrete tanks shall be designed in accordance with the latest edition of AWWA D110 as modified by this document.

A. Base Connection

Tanks shall be designed with either a reinforced non-sliding fixed base (type A.2.l(a), Figure 4A) or anchored flexible base (type A.2.l(b), Figure 4B) as defined in AWWA D110.

Anchorage between the tank shell and floor, shall be designed to resist base shear and overturning moment V and M calculated in accordance with Equations 8-2 and 8-3 with the coefficient R_w taken as 4.5 for a flexible anchored base, and 2.75 for a fixed base.

Anchorage between the tank shell and floor, consisting of embedded dowels or prestressing cable shall be designed to resist a base shear force V using equation 8-2.

Base shear shall be resisted entirely by shear friction, calculated in accordance with ACI 318, or by use of seismic cables.

Bearing pads and water seals in tanks with type A.2.1(b) flexible anchored base shall be designed to withstand the displacement resulting from the base shear calculated in accordance with Equation 8-2 using R_w=1.5. A higher value of R_w may be used if it can be justified that the bearing pads will remain leak tight while accommodating the total nonlinear-calculated displacements of the structure in the design basis earthquake.

In addition to the effects of horizontal acceleration, tanks and their foundations shall be designed to resist the effects of vertical acceleration as indicated in Section 8.2.3. The combined effects of vertical and horizontal accelerations may be combined by the root sum of the squares method.

Foundations for tanks shall be designed to resist the total overturning and shear effects resulting from the forces and moments calculated as follows:

$$V_f = V + S_{ai} W_f \qquad \text{[equation 8-12]}$$

$$M_f = M + V_f H_f \qquad \text{[equation 8-13]}$$

Steel reinforcement and anchor cables provided at the base of tanks shall be fully embedded on both sides of the base joints, to permit the development of the full yield strength of the steel.

B. Roof Connection

Wall to roof connections shall be either flexibly or rigidly tied, with positive mechanical anchorage in the form of dowels, tension cables, or other suitable devices. Unrestrained, free joints are not permitted.

C. Hydrodynamic Seismic Hoop Tensile Stress

In lieu of the equations given in AWWA D110, circumferential stresses N_i and N_c shall be calculated by replacing Z with C_a. It shall be based on Table 8-1. Designs shall include provision for steel reinforcement to carry 100% of the circumferential tensile stresses due to seismic accelerations.

D. Cover

A minimum of 2 inches of cover shall be provided over prestressing wires for fire protection of tanks located in high fire hazard areas or any tank with appreciable fuel load located within 10 feet of the outside wall surface of the tank.

E. Backfill

The beneficial effects of backfill against the wall of a tank with respect to sliding resistance may be considered if the fill is engineered and a geotechnical report is provided which provides appropriate passive pressure values to be used. In order to consider the beneficial effects, the backfill must be provided around the entire perimeter of the tank. If backfill height varies, only beneficial effects of minimum height shall be used.

8.6.3 Water Retention Basins

Open roof, water retention basins shall be designed in accordance with the latest edition of ACI 350.

Circular basins shall be designed for seismic forces calculated in accordance with Section 8.6.2.
Rectangular basins and their foundations, shall be designed by combining earthquake forces aligned with each principal axis of the basin using the square root of the sum of the squares method.

- The base shear and overturning moments resulting from seismic response in each direction shall be separately calculated using the procedures of Section 8.6.2, except that the length of the basin in the direction under consideration shall be substituted for the diameter “D” in all equations.

- The coefficient R_w shall be taken as 4.0.

- In addition to hydrostatic forces, retained earth static and seismic forces, and any other applied loadings, end walls of rectangular basins shall be designed to resist earth pressures as determined using the procedures in Section 8.5.

Division walls in retention basins and reservoirs shall be designed as end walls of individual basins having an adjusted dimension “D” equal to the distance between adjacent walls. For this purpose, the weights of fluid active in the impulsive and convective modes (W_1, W_2) shall be calculated as if for a tank of adjusted dimension “D”. Unbalanced hydrostatic forces resulting from different liquid levels, including one basin empty, should be accounted for.

The sanitary durability coefficient of ACI 350 need not be used in conjunction with the design basis earthquake load case.

8.6.4 Internal Structures

This section applies to all internal components (including mechanical equipment) and structures within reservoirs and water retention structures including roof support structures,

piping, ladders, paddles, agitator shafts, and similar items. It is based on a research report by [Cambra], but has been simplified and modified.

In addition to other loads, resulting from self weight, operating forces, etc., internals shall be designed to resist a uniform seismic lateral force per unit height of internals as follows:

$$f_p = \frac{2.5C_a I\left(w_p + w_w\right) + f_w}{R_w} \qquad \text{[equation 8-14]}$$

where R_w is taken as appropriate from Table 8-8, and:

$$f_w = \frac{0.75\gamma}{g} D_c\left(\pi D_c \hat{u} + C_d |u| u\right) \qquad \text{[equation 8-15]}$$

$$u = 0.77 S_{ac} T_w g \frac{\cosh\left(\frac{3.68\left(H + Y_i\right)}{D}\right)}{\cosh\left(\frac{3.68H}{D}\right)}\left(0.5 - \frac{2r^2}{D^2}\right)\cos\left(\frac{2\pi t}{T_w}\right) \qquad \text{[eqn 8-16]}$$

$$\hat{u} = -1.54 S_{ac} g \frac{\cosh\left(\frac{3.68\left(H + Y_i\right)}{D}\right)}{\cosh\left(\frac{3.68H}{D}\right)}\left(0.5 - \frac{2r^2}{D^2}\right)\sin\left(\frac{2\pi t}{T_w}\right) \qquad \text{[eqn 8-17]}$$

and terms are as shown in Figure 8-6 on the next page.

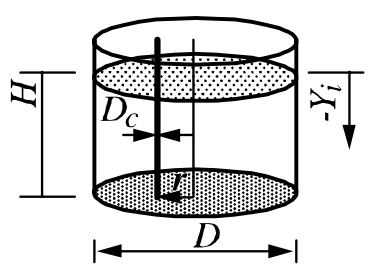

Figure 8-6. Internal Components of Tanks and Basins

The expressions given by Equations 8-15, 8-16 and 8-17 must be evaluated at several locations along the height of the submerged object, to obtain a distribution of hydrodynamic force along the length of the object for design purposes. In order to maximize the force f_w, its

value must be evaluated at different values of time t. As a conservative approximation, the cos term in Equation 8-16 may be set to +1 and the sin term in Equation 8-17 may be set to –1.

When the submerged object is vertical, rises the full height of the tank, and is of uniform cross section, the hydrodynamic force on the submerged object may be approximated as a uniform load over the height of the component as follows:

$$f_w = \frac{0.157\gamma D D_c T_w S_{ac}\left(0.5 - \frac{2r^2}{D^2}\right)}{\pi H \cosh\left(\frac{3.68H}{D}\right)}\left(B_1^2 + B_2^2\right)^{0.5} \qquad \text{[equation 8-18]}$$

where:

$$B_1 = 2\pi^2 D_c \frac{\sinh\left(\frac{3.68H}{D}\right)}{T_w} \qquad \text{[equation 8-19]}$$

$$B_2 = 0.193 T_w C_d S_{ac} g\left(\frac{\sinh\frac{7.36H}{D} + 7.36\frac{H}{D}}{\pi\cosh\left(\frac{3.68H}{D}\right)}\right)\left(0.5 - \frac{2r^2}{D^2}\right) \qquad \text{[equation 8-20]}$$

The above assumes that the internal component is totally or nearly totally immersed in the fluid. In the case of components that have significant length projecting out of the fluid, the above may be overly conservative, and it may be more appropriate to assume that the uniform load f_p in Equation 8-14 is applied over the portion of the component immersed in the fluid plus the slosh height given in Equation 8-11.

Components located just above fluid surfaces may be subject to damage due to sloshing and should be investigated by rational methods.

Table 8-8
R_w Coefficients for Submerged Components

Component	R_w
Structural columns with axial stress ratio fa/Fa < 0.15	8
Structural columns with axial stress ratio fa/Fa >=0.15 and < 0.4	6
Structural columns with axial stress ratio fa/Fa >= 0.4	3
Welded steel pipe (welds as strong as the pipe, for example butt welds)	8
Other pipe	6
Ladders, davits, similar appurtenances	6
Baffles	8
Launders	3
Rotating parts, scrapers	3

E. Other Reservoir Systems

Redwood tanks shall not be used for new installations unless established that they are as reliable as comparable steel tanks.

Concrete tanks may be designed per ACI 350. Roofs and valve works for open cut lined reservoirs shall be designed in accordance with this document.

8.7 Reservoir Outlet Towers

This section applies to terminal reservoirs and earth embedment dam reservoirs with outlet towers.

Free-standing reservoir towers in terminal reservoirs shall be designed to withstand seismic forces, using the latest edition of the UBC and an elastic analysis procedure such as described by [Goyal and Chopra]. Hydrodynamic effects of water, both inside and outside the tower shall be considered in determining the weight of the structure W to be used in the design. Concrete sections shall be evaluated using the latest edition of ACI-318 and Section 8.3.4I of this document. The tower should be evaluated for the case when the reservoir is full, and the effect that varying the water height has on the design should be investigated.

Outlet towers in terminal reservoirs shall be considered Critical structures because their failure may affect the structural integrity of the dams and potentially block inlet / outlet pipe.

All towers shall be designed such that the tower nominal shear strength exceeds the shear corresponding to the nominal flexural strength, when the tower is subjected to a vertical distribution of lateral forces proportional to the weight distribution of the structure.

Response modification factor for all outlet towers R, shall not exceed 2.2, unless capacity of the tower to withstand anticipated inelastic deformations without significant damage is substantiated through appropriate inelastic analyses and laboratory data.

8.8 Pumping Plants

Enclosure structures for pumping plants shall be designed in accordance with Section 8.3 or 8.5. This includes structures which fully or partially enclose any mechanical or electrical components which are needed to operate the pumping plant.

Equipment, including pumps, switchgear, transformers, and similar items, as well as above ground piping shall be designed in accordance with Section 8.9.

Underground piping at pumping plants shall be designed in accordance with Section 8.4.

8.9 Equipment

8.9.1 General

Some equipment components are inherently rugged and maintain structural integrity and functionality during and after earthquakes. For these components, little special seismic design needs to be paid to these elements. On the other hand, some equipment components are vulnerable to seismic hazards, and appropriate design measures to limit risks from these vulnerabilities should be implemented where practical.

8.9.2 Vulnerabilities

Below, vulnerabilities are describe which can reduce the reliability of the equipment.

A. Horizontal Pump

- Evaluate anchorage for seismic loads. Expansion anchors are not acceptable.
- Engine (or motor) and pump must be connected by a rigid base or skid.
- Sufficient slack and flexibility must be provided in cooling, fuel, and electrical lines.
- Avoid attaching heavy valves to pipe near pumps.
- Avoid seismic interactions of pumps with other components.
- Assure that all equipment installed near vital pumps will not impact the pumps during seismic excitation and that such equipment are securely anchored.

B. Vertical Pump

- Shafts with unsupported length greater than 20 feet, must be evaluated for seismic loads.
- The impeller drive must be supported within the casing.

- Evaluate anchorage for seismic loads. Expansion anchors are not acceptable.
- Avoid seismic interactions of pump with other components.
- Assure that all equipment installed near vital pumps will not impact the pumps during seismic excitation and that such equipment are securely anchored.

C. Valves

- Cast iron valves should not be used.
- Actuator and yoke should be supported by the pipe and neither should be independently braced to the structure or supported by the structure unless the pipe is also braced immediately adjacent to the valve to a common structure.
- Sufficient slack and flexibility is provided to tubing, conduits, or piping which supplies air, fluid or power needed to operate the valve.
- Valves should not be near surrounding structures or components which could impact the valve during seismic excitation.

D. Motor Control Centers

- Must be floor mounted NEMA type enclosure.
- Anchorage must be evaluated for seismic loads. At least two anchor bolts should be used per MCC section.
- Anchorage of the MCC must attach to base structural members (not sheet metal).
- Avoid excessive eccentricities when mounting internal components.
- Do not mount heavy or vibration sensitive components directly to sheet metal. Use structural frame metal. Vibration sensitive components may require qualification by test or similarity, if that component is essential to operation.

E. Control Panels and Instrument Racks

- Anchorage must be evaluated for seismic loads.
- All door latches must be secured with locking devices.
- Wire harnesses or standoffs should be installed on cable bundles to preclude large deformation of bundles.

F. Battery Racks

- Battery cells should be lead-calcium, weighing 450 lbs. or less.
- Batteries should be supported on two-step or single tier racks which have x-bracing.
- Batteries should be restrained by side and end rails.
- Provide snug fitting crush-resistant spacers between cells.
- Racks must be anchored, and anchorage evaluated for seismic loads.

G. Above Ground Equipment Piping

- Provide sufficient flexibility at equipment connections and nozzles.
- Assure flexibility of pipe routed between buildings.
- Assure that pipe has sufficient space to displace during seismic excitation without impacting other components or structures.

H. Diesels

- Diesels should be anchored directly to the structural floor, or mounted on a skid which is directly anchored to the structural floor. Vibration isolators should not be used. Components (batteries, day tanks, mufflers, electric panels, etc.) should all be seismically designed.

I. Vibration Isolated Equipment

- Equipment mounted on vibration isolators are vulnerable to damage in earthquakes. Vibration isolators for equipment essential to functionality of the facility should not be used. "Snubbed" vibration isolators should only be used if the "snubbing" devices are approved by the engineer as meeting the strength and operational requirements described herein.

8.9.3 Equipment Anchorage

Equipment anchorage is an important consideration in the design to assure functionality. A majority of equipment failures due to seismic loads can be traced to anchorage failure. Below is a brief discussion regarding equipment anchors and situations to avoid during installation.

A. Expansion Anchors

The wedge type (or torque controlled expansion anchor) has been widely tested and has reasonably consistent capacity when properly installed in sound concrete. Other types of non-expanding anchors such as lead cinch anchors, plastic inserts, and lag screw shield are not as reliable and should not be used. Proper bolt embedment-length should be assured. Inadequate embedment may result from use of shims or high grout pads. Bolt spacing of about ten diameters is required to gain full capacity. Comparable spacing (ten bolt diameters) is required between bolts and free concrete edges. Expansion anchors should not be used for vibrating equipment as they may rattle loose and provide no tensile capacity. All expansion anchors shall be stamped with a letter on the exposed head, which relates to its full length; the lettering system shall be shown on the drawings.

B. Epoxy Anchor Bolts

Epoxy anchorage systems may be used for retrofits or new construction in areas with limited edge distances or limited embedment depths, or in other areas, subject to the environmental limitations on epoxy systems. Inadequate embedment may result from use of shims or high grout pads. Bolt spacing of about ten diameters is required to gain full capacity. Comparable spacing is required between bolts and free concrete edges. Epoxy anchors should not be used for vibrating equipment. All epoxy anchors shall be stamped with

a letter on the exposed head, which relates to its full length; the lettering system shall be shown on the drawings.

C. Cast-in-Place Anchors

Properly installed, deeply embedded cast-in-place headed studs and j-bolts are desirable since the failure mode is ductile (steel governs). Properly installed undercut anchors with long embedment lengths behave essentially like cast-in-place bolts and are similarly desirable. Care should be taken to extend anchors through grout to provide required embedment in the concrete below. Bolt spacing and edge distance requirements are the same as for expansion anchors.

D. Welded Anchors

Well designed and detailed welded connections to embedded plates or structural steel provide high capacity anchorage. There are some precautions: Avoid welding to light gage steel members if possible. Line welds have minimal resistance to bending moments applied about the axis of the weld. Puddle welds and plug welds used to fill bolt holes in equipment bases have relatively low capacity. Welded anchors in damp areas or harsh environments should be checked periodically for corrosion.

8.9.4 Anchorage

The minimum design forces for anchorage and bracing of equipment and non-structural components and for structural design of these components shall follow the procedures in the 1997 UBC. Amplification of ground motions within a building to establish in-structure response spectra may be developed using rational methods, such as in-structure response spectra [ASCE 4-86]. A conservative and acceptable simplified approach to computing equipment anchorage forces is provided in Tang and Schiff [1996]: for San Diego, this applies to V = 3.75 W and M = 2.5 W * H, where V = the base shear, M = the base overturning moment, W = weight of equipment and H = height of the equipment, and this applies to flexible equipment mounted within a structure, assuming elastic response and Z = 0.4g. Approaches to compute equipment anchorage forces by other standards (such as UBC 1994) provide lower anchorage forces, but are not considered suitably conservative for all types of equipment and anchorage systems.

A minimum factor of safety of four should be used for expansion anchors used for equipment anchorage.

The following equipment can be considered as structurally and functionally rugged, and need be designed only for the minimum anchorage forces and the other recommendations in this document:

- Valves
- Engines
- Motors
- Generators
- Turbines
- Horizontal Pumps
- Vertical Pumps (limited unsupported shaft length)

- Hydraulic and Pneumatic Operators (limited yoke length)
- Motor Operators (limited yoke length)
- Compressors
- Transformers with anchored internal coils

8.9.5 Functional Qualification

The following equipment can be considered as structurally rugged, and need be designed for the minimum anchorage forces and the other recommendations in this document. In addition, if post-earthquake operability of this equipment is critical, functional seismic qualification should be addressed by a knowledgeable engineer. Functional seismic qualification may be based on test or experience with similar equipment.

- Air handling equipment and fans (without vibration isolators)
- Low and Medium Voltage Switchgear (< 13.8 kV)
- Instrumentation Cabinets
- Distribution Panels
- Solid State Battery Chargers
- Motor Control Centers
- Instrument Racks
- Batteries in battery racks (must be in seismically designed battery racks)
- Floor mounted inverters up to 5 kVA
- Chillers

8.9.6 Above Ground Piping, Raceways, Conduits and HVAC Ducts

Earthquake restraints for above ground piping, raceway and conduit systems, and HVAC ducts as determined by the UBC code, are oriented to reducing life safety risk, by limiting the falling potential for these items. Post earthquake functionality of these systems is not assured by following the UBC code, and in some cases, the UBC-mandated support systems may increase the potential for functional failures. Restraint systems other than that required by the UBC code may be used, if justified by the engineer. Issues to be considered in design of above ground piping, raceway, conduit and HVAC ducts are as follows:

- Plastic pipes shall be braced laterally at intervals not more than twice that recommended by the manufacturer for vertical support.
- Pipes (and raceways, conduit, ducts) that cross expansion joints between adjacent structures shall be provided with expansion fittings, multiple bends or other suitable provisions to ensure their capacity to sustain expected differential movements between the structures.
- Special care shall be taken to ensure small branch lines off pipe headers do not by virtue of their attachment to structures or equipment, act as the brace for the pipe header unless demonstrated by calculation to have suitable capacity for this service.
- At the option of the engineer, pipes that contain very hazardous materials (chlorine gas) shall be stress analyzed following provisions of the ASME code to ensure that stress levels in the pipes and attached components are within allowables.

8.10 Existing Facilities

8.10.1 Additions, Alterations and Change of Function

The purpose of the section is to assist the Project Engineer in determining whether or not a seismic evaluation is required for a existing facility.

Any of the following actions will trigger a requirement for a seismic evaluation of an entire facility including site stability, equipment, structures, piping, etc.:

- Facility upgrade that increases nominal operating capacity by 20% or more.
- Facility upgrade in which 30% or more of the major pieces of operating equipment are replaced, such that the expected design life of the facility is extended.
- Facility repair, as for example from fire or other damage, that has a construction cost in excess of 30% of the replacement cost of the facility.
- Addition of floor space in excess of 20% of existing space.
- Addition of a partial or full story.
- Change in occupancy or structure utilization.
- Change in live load or equipment load by more than 20%.

The Project Engineer shall determine whether emergency power is required and should be considered in the evaluation.

The seismic evaluation of individual foundations and underground piping connections for items of major equipment (pumps, switchgear, tanks, vessels, etc.) shall be reviewed whenever such piping and foundations are re-used at the time new equipment is installed.

8.10.2 Assessment Criteria

Prior to performing seismic assessments of existing facilities, the importance of the overall facility to be evaluated, and each of its components shall be set in accordance with the criteria of Table 8-1.

When evaluating the seismic adequacy of existing facilities, it is important to exercise judgment in application of current design criteria contained in this document and referenced design guides. Coefficients such as R or R_w, which account for overall construction quality, ductility and toughness, may have to be adjusted to more conservative values than those used for design of new facilities, depending on their structural and mechanical detailing and condition. R or R_w values for non-conforming construction may be based on guidelines provided in Table 8-9 from Southern California Fire Chiefs Association Guidelines for RMPP Seismic Assessments [RMPP] where:

$R_w = Q$ when used with the 1994 UBC [equation 8-21]
$R = Q / 1.4$ when used with the 1997 UBC [equation 8-22]

The following relaxed seismic evaluation criteria shall be used for existing facilities.

- Facilities (or components of facilities) of Standard importance in this Section shall be considered acceptably reliable if they provide 75% of the strength required by this document for new construction of Standard importance.

- Facilities (or components of facilities) of Important importance in this Section shall be considered acceptably reliable if they provide 80% of the strength required by this document for new construction of Important importance.

- Facilities (or components of facilities) of Critical importance in this Section shall be considered acceptably reliable if they provide 90% of the strength and essentially all of the operability safeguards specified by this document for new construction of Critical importance.

8.10.3 Retrofit Design Criteria

Facilities found to have unacceptable seismic adequacy, in accordance with the criteria presented in Section 8.10.2 should be brought into full strength and operability compliance with the requirements of this document for new construction, to the extent practical.

It should always be kept in mind that the intent of retrofitting structures, systems or components of the water system is not to bring them up to current code. In many instances this may not be practical. Seismic retrofits should focus on remediation of the most vulnerable aspects of the structure, system or component. Aspects of the structure, system or component which have acceptable vulnerability (acceptable meaning that the consequences of failure are slight, or the cost to mitigate the vulnerability is excessive compared to the benefit) may be left unmitigated at the approval of the engineer. The retrofit design should be consistent with this guidance. It is always advisable to meet code requirements to the extent practical.

An important point to consider when retrofitting is that over-strengthening areas of the structure, system or component that are currently deficient in strength can force the weak link(s) to occur in other elements that are perhaps more brittle. This can have a negative effect on overall structural performance during a major earthquake. A structure that is presently weak, but ductile, should not be strengthened to the point that its failure mode becomes brittle with a lower energy absorbing capacity, unless the structure is designed to elastically accommodate the earthquake.

Where the structural detailing of existing facilities does not comply with the requirements of this document, the value of R or R_w used shall provide for similar levels of reliability as that intended for new conforming construction. Refer to Section 8.10.2 for further guidance.

Table 8-9a
Ductility-based Reduction Factors for Existing Steel Structures [RMPP]

Steel Structures	Q
Ductile Moment Frame. Use Q=6 if there is a significant departure from the intent of the 1988 (or later) UBC for special moment-resisting frames	6
Ductile Moment Frame. Use Q=8 if there is no significant departure from the intent of the 1988 (or later) UBC for special moment-resisting frames	8
Ordinary Moment Frame. The following characteristics are usually indicative of a Q=2 value (also see Note 5): a. There is a significant strength discontinuity in any of the vertical lateral-force-resisting elements, i.e., a weak story. b. There are partial penetration welded splices in the columns of the moment-resisting frames. c. The structure exhibits "strong girder – weak column" behavior, i.e., under combined lateral and vertical loading, hinges occur in a significant number of columns before occurring in the beams	2
Ordinary Moment Frame. The following characteristics are usually indicative of a Q=4 value (also see Note 5): d. Any of the moment frame elements is not compact. e. Any of the beam-column connections in the lateral-force-resisting moment frames does not have both: (1) full penetration flange welds; and (2) a bolted or welded web connection. f. There are bolted splices in the columns of the moment-resisting frames that do not connect both flanges and webs.	4
Ordinary Moment Frame. If characteristics (a) through (e) are not present.	5
Braced Frame. The following characteristics are usually indicative of a Q=2 value (also see Note 5): a. There is a significant strength discontinuity in any of the vertical lateral-force-resisting elements, i.e., a weak story. b. The bracing system includes "K" braced bays. Note: "K" bracing is permitted for frames of two stories or less by using Q=2. For frames of more than two stories, "K" bracing must be justified on a case-by-case basis. c. Brace connections are not able to develop the capacity of the diagonals. d. Column splices cannot develop the column capacity	2
Braced Frame. The following characteristics are usually indicative of a Q=4 value (also see Note 5): e. Diagonal elements designed to carry compression have (kl/r) greater than 120. f. The bracing system includes chevron ("V" or inverted "V") bracing that was designed to carry gravity load.	4
Braced Frame. If characteristics (a) through (f) are not present.	5
Cantilever Column. The following characteristics are usually indicative of a Q=1.5 value (also see Note 5): a. Column splice details cannot develop the column capacity. b. Axial load demand represents more than 20% of the axial load capacity.	1.5
Cantilever Column. If characteristics (a) through (b) are not present.	2.5

Table 8-9b
Ductility-based Reduction Factors for Existing Concrete Structures [RMPP]

Concrete Structures	Q
Ductile Moment Frame. Use Q=6 if there is a significant departure from the intent of the 1988 (or later) UBC for special moment-resisting frames	6
Ductile Moment Frame. Use Q=8 if there is no significant departure from the intent of the 1988 (or later) UBC for special moment-resisting frames	8
Ordinary Moment Frame. The following characteristics are usually indicative of a Q=1.5 value (also see Note 5): a. There is a significant strength discontinuity in any of the vertical lateral-force-resisting elements, i.e., a weak story. b. The structure exhibits "strong girder – weak column" behavior, i.e., under combined lateral and vertical loading, hinges occur in a significant number of columns before occurring in the beams. c. There is visible deterioration of concrete or reinforcing steel in any of the frame elements, and this damage might lead to a brittle failure mode. d. Shear failure occurs before flexural failure in a significant number of the columns.	1.5
Ordinary Moment Frame. The following characteristics are usually indicative of a Q=2.5 value (also see Note 5): e. The lateral-resisting frames include prestressed (pre-tensioned or post-tensioned) elements. f. The beam stirrups and column ties are not anchored into the member cores with hooks of 135 degrees or more. g. Columns have ties spaced at greater than d/4 throughout their length. Beam stirrups are spaced at greater than d/2. h. Any column bar lap splice is less then $35d_b$ long. Any column bar lap splice is not enclosed by ties spaced at $8d_b$ or less. i. Development length for longitudinal bars is less than 24 d_b. j. Shear failure occurs before flexural failure in a significant number of the beams.	2.5
Ordinary Moment Frame. If characteristics (a) through (j) are not present.	3.5
Shear Wall. The following characteristics are usually indicative of a Q=1.5 value (also see Note 5): a. There is visible deterioration of concrete or reinforcing steel in any of the frame elements, and this damage might lead to a brittle failure mode. b. There is a significant strength discontinuity in any of the vertical lateral-force-resisting elements, i.e., a weak story. c. Any wall is not continuous to the foundation.	1.5
Shear Wall. The following characteristics are usually indicative of a Q=3 value (also see Note 5): d. The reinforcing steel for concrete walls is not greater than 0.0025 times the gross area of the wall along both the longitudinal and transverse axes. The spacing of reinforcing steel along either axis exceeds 18 inches. e. For shear walls with H/D greater then 2.0, the boundary elements are not confined with either: (1) spirals; or (2) ties at spacing of less than $8d_b$. f. For coupled shear wall buildings, stirrups in any coupling beam are spaced at greater than $8d_b$ or are not anchored into the core with hooks of 135 degrees or more.	3
Shear Wall. If characteristics (a) through (e) are not present.	5

Table 8-9c
Ductility-based Reduction Factors for Existing Concrete Structures [RMPP]

Concrete Structures	Q
Cantilever Pier / Column. The following characteristics are usually indicative of Q=1.5 value (also see Note 5): a. There is visible deterioration of concrete or reinforcing steel in any of the frame elements, and this damage might lead to a brittle failure mode. b. Axial load demand represents more than 20% of the axial load capacity.	1.5
Cantilever Pier / Column. The following characteristics are usually indicative of Q=2.5 value (also see Note 5): c. The ties are not anchored into the member cores with hooks of 135 degrees or more. d. Columns have ties spaced at greater than d/4 throughout their length. Piers have ties spaced at greater than d/2 throughout their length. e. Any pier/column bar lap splice is less then $35d_b$ long. Any pier/column bar lap splice is not enclosed by ties spaced at $8d_b$ or less. f. Development length for longitudinal bars is less than 24 d_b.	2.5
Cantilever Pier / Column. If characteristics (a) through (f) are not present.	3.5

Notes to Tables 8.9a-c:

1. The use of the highest Q-factors in each category requires that the elements of the primary load path of the lateral-force-resisting system have been proportioned to assure ductile rather than brittle system behavior. This can be demonstrated by showing that each connection in the primary load path has an ultimate strength of at least equal to 150% of the load capacity (governed by either yielding or stability) of the element to which the load is transferred. Alternatively, Q-factors should be reduced consistent with the limited ductility of the governing connection and/or the governing connection should be modified as required.

2. A Q-factor different from the tabulated values (higher or lower) may be justified on a case-by-case basis.

3. If more than one of the conditions specified in Table 8-9 applies, the lower Q-factor associated with those conditions should be used.

4. These values of Q apply to overturning checks, soil bearing, and pile capacities.

5. If bolt yielding controls the evaluation of the anchor bolts (as opposed to concrete failure or anchor bolt slippage), and there is a ductile force transfer mechanism between the structure and foundation, then the Q-factor to be used for both the evaluation of the anchor bolts and the rest of the structural system corresponds to that for the structural system itself.

   If concrete failure or anchor bolt slippage controls the evaluation of anchor bolts (as opposed to bolt yielding), or there is a non-ductile force transfer mechanism between the structure and foundation, then a Q-factor of 1.5 should be used for the evaluation of the anchor bolts and the rest of the structural system. Also see Note 6.

6. Alternatively, for structures that may contain localized/single features with limited ductility, such as limiting connections or splices, non compact steel members, high (Kl/r) members and nonductile anchor bolts, that do not occur at a significant number of locations, the load capacity of the specific limiting feature(s) may be evaluated and/or improved in lieu of using system-wide lower Q-factors that tend to generically penalize all elements of the structural system.

8.11 References

Abrahamson, N., Non-stationary spectral metchin program RSPMATCH (unpublished), 1993.

American Concrete Institute. "Building Code Requirements for Reinforced Concrete" ACI 318. 1992.

American Concrete Institute. "Environmental Engineering Concrete Structures" ACI 350R-89. 1989.

American Water Works Association. "D-100 – Standard for Welded Steel Tanks for Water Storage," November 1996, Denver, Colorado.

American Water Works Association. "D-103 – Factory Coated Bolted Tanks for Water Storage," 1997, Denver, Colorado.

American Water Works Association. "D-110 – Standard for Wire and Strand-Wound Circular Prestressed Concrete Tanks," 1995. Denver, Colorado.

Artim, E.R., and Streiff, D., Trenching the Rose Canyon fault zone, San Diego, California: Final Technical Report prepared by Woodward Clyde Consultants for U.S. Geological Survey, Contract No. 14-08-001-19118, 34 p., app. A-E, 1981.

ASCE, "Guidelines for the Seismic Design of Oil and Gas Pipeline Systems," Committee on Gas and Liquid Fuel Lifelines of the ASCE Technical Council on Lifeline Earthquake Engineering, American Society of Civil Engineers, 1984.

ASCE 4-86, "Seismic Analysis of Safety Related Nuclear Structures and Commentary on Standard for Seismic analysis of Safety Related Nuclear Structures, ASCE Standard 4-86, September, 1986.

Cambra, F.J., "Earthquake Response Considerations of Broad Liquid Storage Tanks" Earthquake Engineering Research Center UCBIEERC 82-25, Nov. 1982, Berkeley, California.

Diekmann, E.F., "Diaphragms and Shear Walls", Chapter 8 from Wood Engineering and Construction Handbook, 2nd Edition, Keith F. Flaherty and Thomas G. Williamson, editors, McGraw-Hill.

FEMA 267, Interim Guidelines: Evaluation, Repair, Modification and Design of Welded Steel Moment Frame Structures, Federal Emergency Management Agency, Report No. FEMA 267, 1995.

Goyal, A. and Chopra, A.K. "Earthquake Analysis and Response of Inlet-Outlet Towers." Report UCB EERC-89-04. University of California. Earthquake Engineering Research Center, 1989.

Haroun, M. A. "Implications of Recent Nonlinear Analyses on Seismic Standards of Liquid Storage Tanks," in Optimizing Post-Earthquake Lifeline System Reliability, Proceedings of the 5th U.S. Conference on Lifeline Earthquake Engineering, ed. W. Elliott and P. McDonough, Technical Council on Lifeline Earthquake Engineering, Monograph No. 16, ASCE, August, 1999.

ICBO, "Uniform Building Code", April, 1997; International Conference of Building Officials, Whittier, California.

ICBO, "Uniform Building Code", May 1, 1994; International Conference of Building Officials, Whittier, California.

Kennedy, M.P. and Clarke, S.H., An analysis of the Rose Canyon fault zone in San Diego Bay, California: Geological Society of America Abstracts with Programs, v. 29, no. 5, p.22, 1997.

Multidisciplinary Center for Earthquake Engineering Research (MCEER), Preliminary draft of seismic retroifitting manual for highway structures: Part I Bridges, MCEER Highway Project Task 106-G-2.2, FHWA Contract DTFH61-92-C-00106, 2000.

National Fire Protection Association. "NFPA-13 Installation of Sprinkler Systems," 1991. Quincy, Ma.

National Institute of Standards and Technology (NIST), Standards of seismic safety for existing Federally owned or leased buildings, *in* Todd, D., ed.: report prepared for Federal Emergency Management Agency, NISTR 5382 and ICSSC RP 4, 1994.

Newmark, N.M. and Hall, W.J. "Earthquake Spectra and Design." Earthquake Engineering Research Institute Monograph Series.

RMPP Seismic Guidance Committee, "Proposed Guidance for RMPP Seismic Assessments," Prepared by the RMPP Sub-committee of the Southern California Fire Chiefs Association, June 1992.

Seed H.B. and Whitman R.V. "Design of Earth Retention Structures for Dynamic Loads" ASCE Journal of the Soil Mechanics and Foundations Division, June, 1970.

Tang, A. and Schiff, A., Eds., Methods of Achieving Improved Seismic Performance of Communications Equipment, Technical Council on Lifeline Earthquake Engineering, Monograph No. 10, ASCE, 1996.

Treiman, J.A., The Rose Canyon fault zone, Southern California: California Division of Mines and Geology Open-File Report 93-02, 44 p., scale 1:100,000, 1993.

Wozniak, R.S. and Mitchell W.W. "Basis of Seismic Design Provisions for Welded Steel Oil Storage Tanks." Presented at the Session on Advances in Storage Tank Design, API, Toronto, Ontario, Canada, May, 1978.

Youd, T.L. and D.M. Perkins. "Mapping of Liquefaction Induced Ground Failure Potential." American Society of Civil Engineers, Journal of the Geotechnical Engineering Division. Volume 104, No. 4, 1978.

Attachment 1

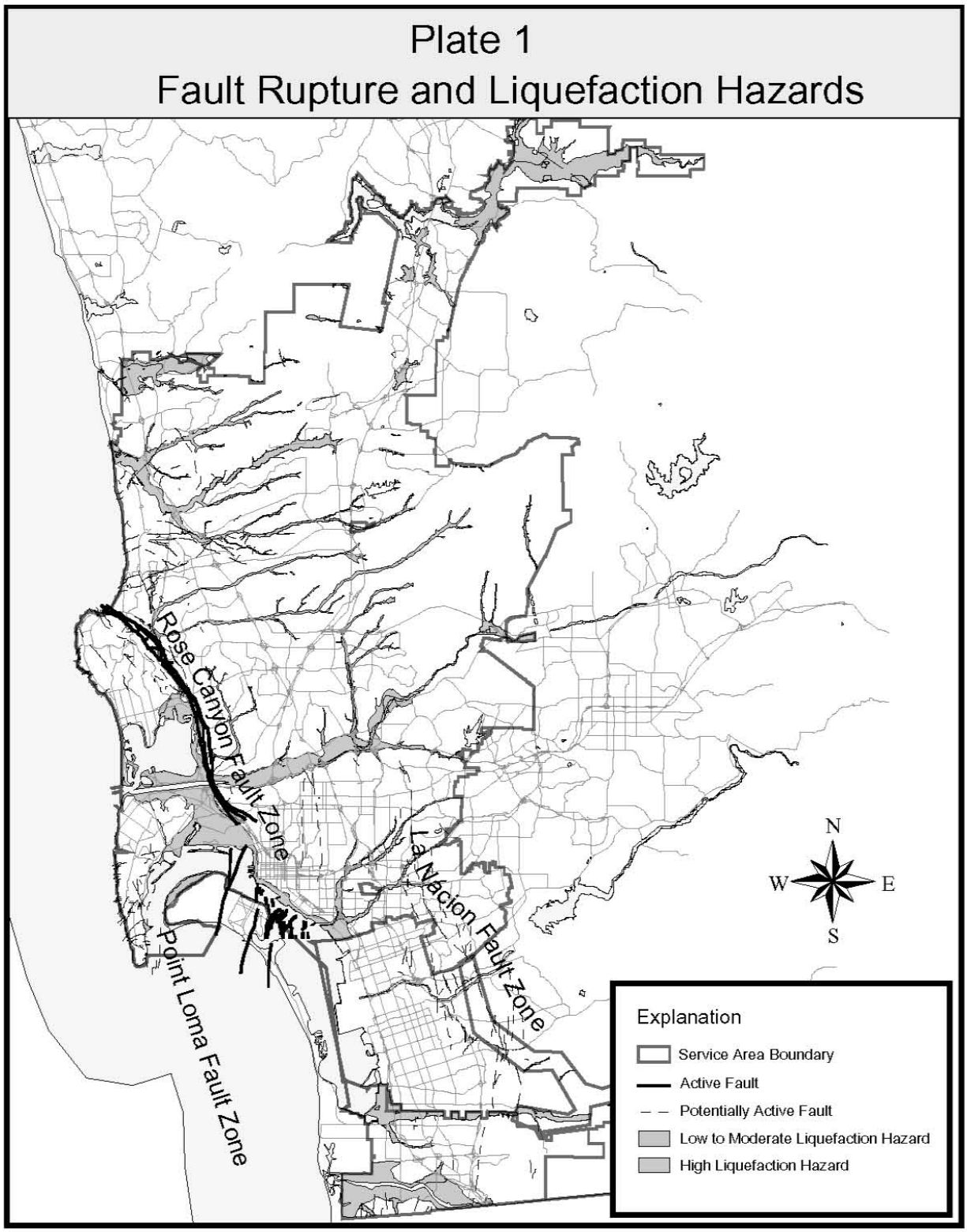

Attachment 2

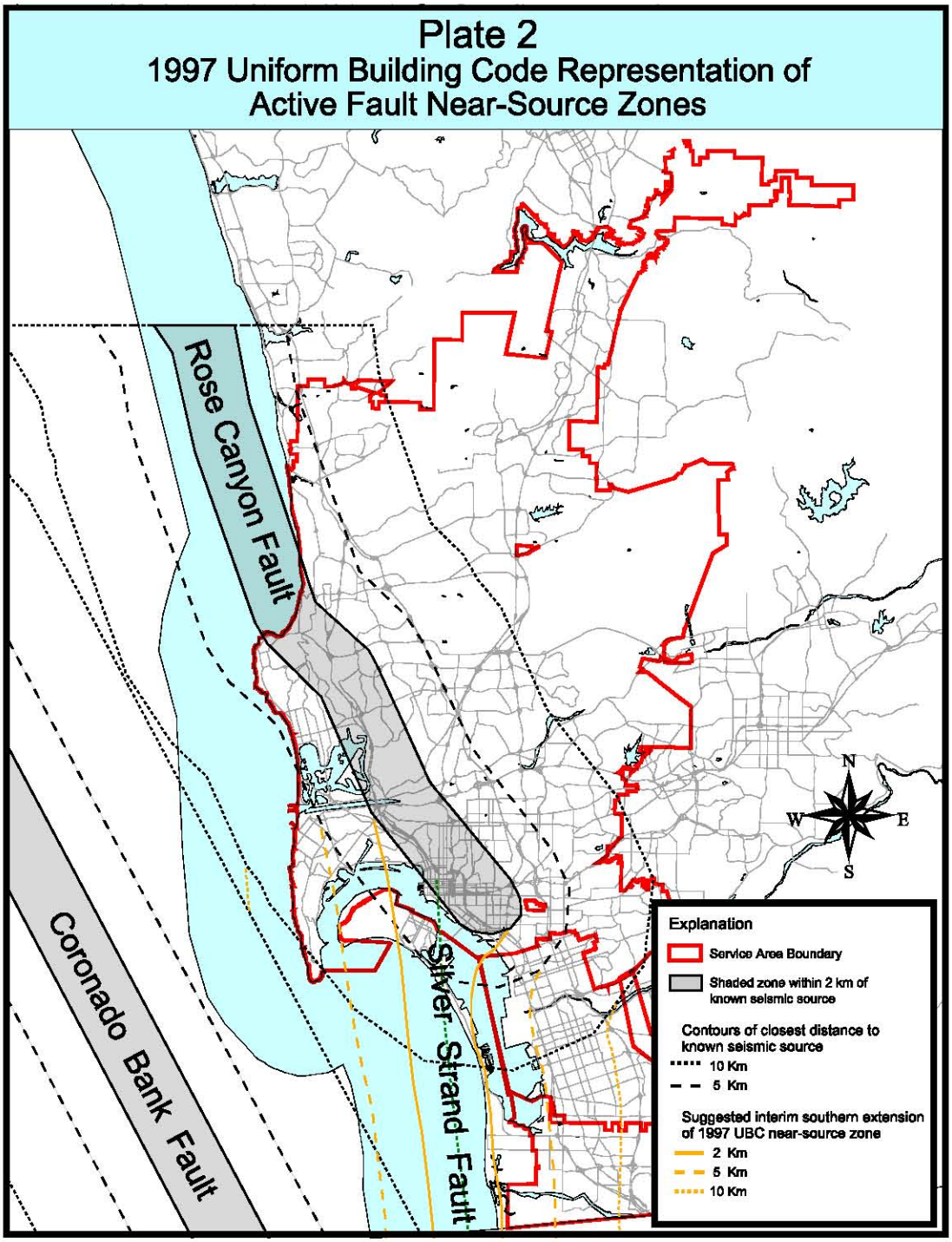
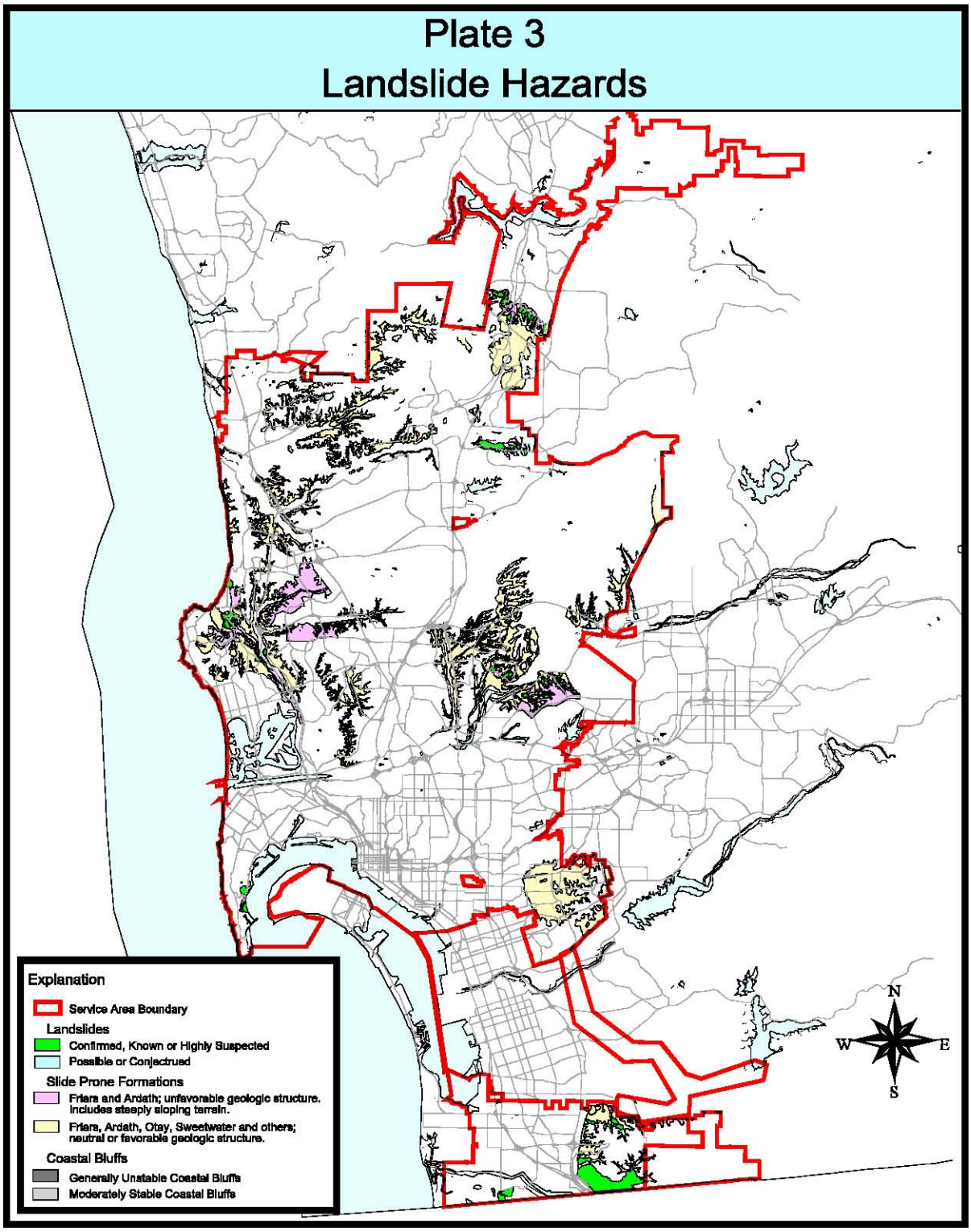
Attachment 3