APPENDIX C

Traffic Impact Analysis

FRANKLIN RIDGE ROAD CONNECTION
TRAFFIC IMPACT STUDY

January 2015

KOA CORPORATION
PLANNING & ENGINEERING

www.koacorporation.com

FRANKLIN RIDGE ROAD CONNECTION
TRAFFIC IMPACT STUDY

January 2015

Prepared for:
City of San Diego
1222 First Avenue
San Diego, CA 92101
San Diego, CA 92014-2698

Prepared by:
KOA Corporation
5095 Murphy Canyon Road, Suite 330
San Diego, CA 92123
(619) 683-2933
Fax: (619) 683-7982

Job No.: JB04163

Table of Contents

EXECUTIVE SUMMARY **7**

CHAPTER 1 THE PROJECT **8**

INTRODUCTION 8
PROJECT DESCRIPTION 8
STUDY AREA 8
Roadway Segments *8*
Intersections *9*
Freeway Mainline *10*
Metered Freeway On-Ramps *10*
DIVERTED PROJECT TRIPS AND ROUTES 10

CHAPTER 2 METHODOLOGIES **14**

STUDY SCENARIOS 14
ANALYSIS METHODOLOGIES 14
Intersection Capacity Analysis *14*
Signalized Intersections 14
All-way Stop-controlled (AWSC) Intersections 15
Two-way Stop-controlled (TWSC) Intersections 15
Roadway Segment Capacity Analysis *15*
Arterial Analysis *15*
FreewayMainline Analysis *15*
Metered Freeway On-Ramp Conditions *16*

CHAPTER 3 EXISTING CONDITIONS (2012) **17**

ROADWAY NETWORK 17
EXISTING TRAFFIC VOLUMES 18
EXISTING ANALYSIS 18
Roadway Segment Conditions *18*
Intersection Conditions *18*
Freeway Mainline Conditions *18*
Freeway Ramp Meter Conditions *19*

CHAPTER 4 OPENING DAY (2017) WITHOUT CONNECTION CONDITIONS **29**

ROADWAY NETWORK 29
OPENING DAY (2017) VOLUMES 29
OPENING DAY (2017) WITHOUT CONNECTION ANALYSIS 30
Roadway Segment Conditions *30*
Intersection Conditions *30*
Freeway Mainline Conditions *30*
Metered Freeway On-Ramp Conditions *30*

CHAPTER 5 OPENING DAY (2017) WITH CONNECTION CONDITIONS **42**

ROADWAY NETWORK 42
OPENING DAY (2017) WITH CONNECTION 42
Roadway Segment Conditions *42*
Intersection Conditions *42*
Freeway Mainline Conditions *42*
Freeway Ramp Meter Conditions *42*

CHAPTER 6 LONG TERM (2035) WITHOUT CONNECTION CONDITIONS **53**

YEAR 2035 ROADWAY NETWORK 53
YEAR 2035 TRAFFIC VOLUMES 53

LONG TERM (2035) WITHOUT CONNECTION ANALYSIS 53
Roadway Segment Conditions *53*
Intersection Conditions *54*
Freeway Mainline Conditions *54*
Freeway Ramp Meter Conditions *54*

CHAPTER 7 LONG TERM (2035) WITH CONNECTION CONDITIONS 64

ROADWAY NETWORK 64
LONG TERM (2035) WITH CONNECTION ANALYSIS 64
Roadway Segment Conditions *64*
Intersection Conditions *64*
Freeway Mainline Conditions *65*
Freeway Ramp Meter Conditions *65*

CHAPTER 8 COMMUNITY ACCESSIBILITY 75

BACKGROUND 75
BIKE LANES *75*
BUS SERVICE *75*
LIGHT RAIL *75*
COMMUNITY ACCESS *76*
ALTERNATIVES TO THE PROJECT *77*

CHAPTER 9 SUMMARY OF IMPACTS AND MITIGATIONS 81

List of Figures

FIGURE 1-1 – PROJECT STUDY AREA 11
FIGURE 1-2 – SERRA MESA COMMUNITY PLAN 12
FIGURE 1-3 – MISSION VALLEY COMMUNITY PLAN 13
FIGURE 3-1 – EXISTING CIRCULATION NETWORK 24
FIGURE 3-2 – EXISTING GEOMETRIC CONFIGURATIONS 25
FIGURE 3-3 – EXISTING DAILY ROADWAY SEGMENT VOLUMES 26
FIGURE 3-4 – EXISTING AM PEAK HOUR INTERSECTION VOLUMES 27
FIGURE 3-5 – EXISTING PM PEAK HOUR INTERSECTION VOLUMES 28
FIGURE 4-1 – OPENING DAY (2017) WITHOUT CONNECTION CIRCULATION NETWORK 37
FIGURE 4-2 – OPENING DAY (2017) WITHOUT CONNECTION GEOMETRIC CONFIGURATIONS 38
FIGURE 4-3 – OPENING DAY (2017) WITHOUT CONNECTION DAILY ROADWAY SEGMENT VOLUMES 39
FIGURE 4-4 – OPENING DAY (2017) WITHOUT CONNECTION AM PEAK HOUR INTERSECTION VOLUMES 40
FIGURE 4-5 – OPENING DAY (2017) WITHOUT CONNECTION PM PEAK HOUR INTERSECTION VOLUMES 41
FIGURE 5-1 – OPENING DAY (2017) WITH DAILY ROADWAY SEGMENT VOLUMES 50
FIGURE 5-2 – OPENING DAY (2017) WITH AM PEAK HOUR INTERSECTION VOLUMES 51
FIGURE 5-3 – OPENING DAY (2017) WITH PM PEAK HOUR INTERSECTION VOLUMES 52
FIGURE 6-1 – LONG TERM (2035) WITHOUT DAILY ROADWAY SEGMENT VOLUMES 61
FIGURE 6-2 – LONG TERM (2035) WITHOUT AM PEAK HOUR INTERSECTION VOLUMES 62
FIGURE 6-3 – LONG TERM (2035) WITHOUT PM PEAK HOUR INTERSECTION VOLUMES 63
FIGURE 7-1 – LONG TERM (2035) WITH DAILY ROADWAY SEGMENT VOLUMES 72
FIGURE 7-2 – LONG TERM (2035) WITH AM PEAK HOUR INTERSECTION VOLUMES 73
FIGURE 7-3 – LONG TERM (2035) WITH PM PEAK HOUR INTERSECTION VOLUMES 74
FIGURE 8-1 – FACILITY ACCESSIBILITY MAP 80

List of Tables

TABLE 3-1 EXISTING ROADWAY SEGMENT CONDITIONS 20
TABLE 3-2 EXISTING INTERSECTION CONDITIONS 21
TABLE 3-3 EXISTING FREEWAY MAINLINE CONDITIONS 22
TABLE 3-4 EXISTING FREEWAY RAMP METER CONDITIONS 23
TABLE 4-1 OPENING DAY (2017) WITHOUT CONNECTION SEGMENT CONDITIONS 31
TABLE 4-2 OPENING DAY (2017) WITHOUT CONNECTION INTERSECTION CONDITIONS 33
TABLE 4-3 OPENING DAY (2017) WITHOUT CONNECTION FREEWAY MAINLINE CONDITIONS 35
TABLE 4-4 OPENING DAY (2017) WITHOUT CONNECTION FREEWAY RAMP METER CONDITIONS 36
TABLE 5-1 OPENING DAY (2017) WITH CONNECTION SEGMENT CONDITIONS 44
TABLE 5-2 OPENING DAY (2017) WITH CONNECTION INTERSECTION CONDITIONS 46
TABLE 5-3 OPENING DAY (2017) WITH CONNECTION FREEWAY MAINLINE CONDITIONS 48
TABLE 5-4 OPENING DAY (2017) WITH CONNECTION FREEWAY RAMP METER CONDITIONS 49
TABLE 6-1 CUMULATIVE PROJECTS 53
TABLE 6-2 LONG TERM (2035) WITHOUT CONNECTION DAILY ROADWAY SEGMENT CONDITIONS 55
TABLE 6-3 LONG TERM (2035) WITHOUT CONNECTION INTERSECTION CONDITIONS 57
TABLE 6-4 LONG TERM (2035) WITHOUT CONNECTION FREEWAY MAINLINE CONDITIONS 59
TABLE 6-5 LONG TERM (2035) WITHOUT CONNECTION FREEWAY RAMP METER CONDITIONS 60
TABLE 7-1 LONG TERM (2035) WITH CONNECTION DAILY ROADWAY SEGMENT CONDITION 66
TABLE 7-2 LONG TERM (2035) WITH CONNECTION INTERSECTION CONDITIONS 68
TABLE 7-3 LONG TERM (2035) WITH CONNECTION FREEWAY MAINLINE CONDITIONS 70
TABLE 7-4 LONG TERM (2035) WITH CONNECTION FREEWAY RAMP METER CONDITIONS 71
TABLE 8-1 COMMUNITY ACCESS TRAVEL TIMES 77
TABLE 9-1 SIGNIFICANT IMPACT COMPARISON – OPENING DAY (2017) VS EXISTING CONDITIONS (2012) 82
TABLE 9-2 83
SIGNIFICANT IMPACT COMPARISON – LONG TERM (2035) VS EXISTING CONDITIONS (2012) 83
TABLE 9-3 IMPACT MITIGATION OPENING DAY (2017) WITH CONNECTION VS EXISTING CONDITIONS (2012) 84
TABLE 9-4 IMPACT MITIGATION LONG TERM (2035) WITH CONNECTION VS EXISTING CONDITIONS (2012) 85

Appendices

APPENDIX A DIVERTED PROJECT TRIPS AND ROUTES
APPENDIX B FORECAST MODELS
APPENDIX C LEVEL OF SERVICE CONCEPTS, ANALYSIS METHODOLOGIES, STANDARDS OF SIGNIFICANCE
APPENDIX D TRAFFIC COUNT DATA
APPENDIX E PEAK HOUR INTERSECTION AND ARTERIAL ANALYSIS WORKSHEETS EXISTING CONDITIONS (2012)
APPENDIX F PEAK HOUR INTERSECTION AND ARTERIAL ANALYSIS WORKSHEETS OPENING DAY (2017) WITHOUT CONNECTION CONDITIONS
APPENDIX G PEAK HOUR INTERSECTION AND ARTERIAL ANALYSIS WORKSHEETS OPENING DAY (2017) WITH CONNECTION CONDITIONS
APPENDIX H PEAK HOUR INTERSECTION OPENING DAY (2017) WITH CONNECTION CONDITIONS -MITIGATIONS-
APPENDIX I PEAK HOUR INTERSECTION AND ARTERIAL ANALYSIS WORKSHEETS LONG TERM (2035) WITHOUT CONNECTION CONDITIONS
APPENDIX J PEAK HOUR INTERSECTION AND ARTERIAL ANALYSIS WORKSHEETS LONG TERM (2035) WITH CONNECTION CONDITIONS
APPENDIX K PEAK HOUR INTERSECTION LONG TERM (2035) WITH CONNECTION CONDITIONS -MITIGATIONS-
APPENDIX L MTS ROUTE MAPS AND SCHEDULES
APPENDIX M REPRESENTATIVE ACCESSIBILITY DERIVATION WORKSHEETS
APPENDIX N CALTRANS ILV CALCULATIONS

EXECUTIVE SUMMARY

This study examines the effects on the circulation system of the communities of Mission Valley and Serra Mesa if there were to be a street connection through the Civita Project connecting to Phyllis Place near its interchange with I-805. The study presents information for existing, near-term and long-term conditions for what would occur without a road connection and what conditions would be like with implementation of a connection.
Traffic conditions are the major focus of the analysis, but the effects to emergency and community access are also analyzed.

Since the effects to the roadway system differ depending on whether the connection is present or not and which future scenario is being considered the report presents all of the impacts that were found by applying the City's guidelines for significance. Significant impacts were calculated by comparing each analysis year and condition to the Baseline Existing Conditions (2012) case. Although significance was determined for both year conditions and road connection cases, mitigation measures were only proposed for the with Franklin Ridge Road connection scenarios. The measures to mitigate these impacts have been identified in Chapter 9 of this report. For the most part, the same improvements that had previously been identified in the Quarry Falls (Civita) Traffic Impact Study and EIR pertain (September, 2007). Both documents included both with and without the Franklin Ridge Road connection scenarios. Where a mainline freeway impact is identified on the I-805 mainlines near the Murray Ridge Rd/ Phyllis Place interchange no attempt to introduce a new freeway lane for mitigation has been offered, and that impact remains unmitigated.

CHAPTER 1
THE PROJECT

INTRODUCTION

This study was commissioned by The City of San Diego to evaluate the effects of the proposed Serra Mesa Community Plan amendment to include a street connection between the communities of Mission Valley and Serra Mesa.

The Mission Valley Community Plan envisions a road connection that would connect Serra Mesa (at Phyllis Place) to Mission Valley (at Friars Road). However, this road connection is not identified in the Serra Mesa Community Plan. Phyllis Place currently serves approximately 200 homes in Serra Mesa in what is called Abbots Hill. Phyllis Place provides Abbots Hill with direct access to Interstate 805. The Franklin Ridge Road connection, which would connect to the Civita development internal public streets Via Alta and Franklin Ridge Road, and would provide Mission Valley with another access to a freeway. It would also provide another connection between the Serra Mesa Community and Mission Valley.

PROJECT DESCRIPTION

The proposed project is to amend the Serra Mesa Community Plan to include a street connection (the "Franklin Ridge Road extension") with vehicular pedestrian and bicycle access, from Phyllis Place to Via Alta Road in the Civita development in Mission Valley; and includes a Site Development Permit (SDP) to construct this roadway connection as a four lane major street. The study effectively shows how the road connection, if implemented, would impact circulation in the Serra Mesa and Mission Valley Community Plans.

This traffic impact study (TIS) analyzes the viability of a new road connection with pedestrian and bicycle access on Franklin Ridge Road and the necessary alternatives that will include different street classifications and alignments for the Franklin Ridge Road connection to Phyllis Place.

STUDY AREA

The project study area consists of 30 roadway segments, 25 intersections, 2 arterials, 1 freeway mainline and 2 metered freeway ramps. This area is bordered generally by Aero Drive to the north, Rio San Diego Drive to the south, and Mission Center Court and Northside Drive to the west and east respectively.

Figure 1-1 shows the project vicinity and study area. Figure 1-2 and 1-3 show maps of the Mission Valley and Serra Mesa Communities respectively. The Civita development is located in Mission Valley and is bordered to the north by Serra Mesa. The Franklin Ridge Road connection is proposed to link these two communities.

The following roadway and freeway segments, intersections, arterials, and metered freeway ramps are analyzed in this report:

Roadway Segments

- **Civita Boulevard**
  1. Mission Center Road – Via Alta
  2. Via Alta – Russel Park Way
  3. Russel Park Way – Qualcomm Way
  4. Qualcomm Way – Franklin Ridge Road

- **Franklin Ridge Road**
  5. Via Alta – Civita Blvd
  6. Via Alta – Phyllis Place
- **Friars Road**
  7. Mission Center Road – Qualcomm Way
  8. Qualcomm Way – River Run Road
  9. River Run Road – Fenton Parkway
  10. Fenton Parkway – Northside Drive
- **Mission Center Road**
  11. Hazard Center Drive - Friars Road
  12. Friars Road to Westside Drive (Mission Center Driveway)
  13. Westside Drive (Mission Center Driveway) – Mission Valley Road
  14. Mission Valley Road – Acquatera Drive
  15. Acquatera Drive – Murray Ridge Road
- **Murray Ridge Road**
  16. I-805 NB Ramps – Mission Center Road
  17. Mission Center Road – Pinecrest Avenue
  18. Pinecrest Avenue – Sandrock Road
- **Phyllis Place**
  19. Abbotshill Road - Franklin Ridge Road
  20. Franklin Ridge Road - I-805 SB Ramps
  21. I-805 SB Ramps – I-805 NB Ramps
- **Qualcomm Way**
  22. Civita Boulevard – Friars Road WB Ramps
  23. Friars Road WB Ramps – Friars Road EB Ramps
  24. Friars Road EB Ramps – Rio San Diego Drive
- **Rio San Diego Drive**
  25. Qualcomm Way – Rio Bonito Way
- **Russel Park Way**
  26. Civita Boulevard – Friars Road
- **Sandrock Road**
  27. Murray Ridge Road – Aero Drive
- **Via Alta**
  28. Franklin Ridge Road – Civita Boulevard
  29. Civita Boulevard – Westside Drive (Mission Center Driveway)
- **Westside Drive (Mission Center Driveway)**
  30. Mission Center Road – Via Alta

Intersections

1. Friars Road & River Run Road
2. Friars Road & Fenton Parkway
3. Friars Road & Northside Drive
4. Mission Center Road & Murray Ridge Road/Phyllis Place
5. Mission Center Road & Acquatera Drive
6. Mission Center Road & Mission Valley Road (Civita Boulevard)
7. Mission Center Road & Westside Drive (Mission Center Driveway)
8. Mission Center Road & Friars Road EB Ramps
9. Mission Center Road & Friars Road WB Ramps
10. Mission Center Road & Mission Center Court

11. Aero Drive & Sandrock Road
12. Murray Ridge Road & Sandrock Road
13. Murray Ridge Road & Pinecrest Avenue
14. I-805 NB Ramps & Murray Ridge Road
15. I-805 SB Ramps & Phyllis Place
16. Qualcomm Way & Friars Road EB Ramps
17. Qualcomm Way & Friars Road WB Ramps
18. Qualcomm Way & Rio San Diego Drive
19. Rio San Diego Drive & Rio Bonito Way

Future Intersections

20. Phyllis Place & Franklin Ridge Road
21. Via Alta & Franklin Ridge Road
22. Via Alta & Civita Boulevard (previously named Quarry Falls Boulevard)
23. Civita Boulevard & Russell Park Way (Gill Village Drive)
24. Qualcomm Way and Civita Boulevard

Freeway Mainline

- I-805 (SR 163 – I-8) multiple segments:
  1. SR-163 to Mesa College Drive
  2. Mesa College Drive to Phyllis Place
  3. Phyllis Place to I-8

Metered Freeway On-Ramps

- I-805 at Phyllis Place SB and NB

DIVERTED PROJECT TRIPS AND ROUTES

The project daily and peak hour trips discussed in this analysis have been developed by considering the. effects of the addition of the road. Two types of trips associated with traffic using any new connection are:

1. **"Locally Diverted" Traffic** – traffic that diverts to a new road connection from another route because the new road connection offers a more direct route.
2. **"Community Diverted" Traffic** – traffic that diverts to a new road connection from other arterials and freeways in the community because the new road connection offers a more direct route.

Two "select link" SANDAG model runs were done in order to estimate the amount of "Locally Diverted" and "Community Diverted" traffic. A complete description of the methodology used to estimate 2035 "Locally Diverted" Traffic trips and "Community Diverted" Traffic trips is contained in Appendix A.

Figure 1-1

Project Study Area

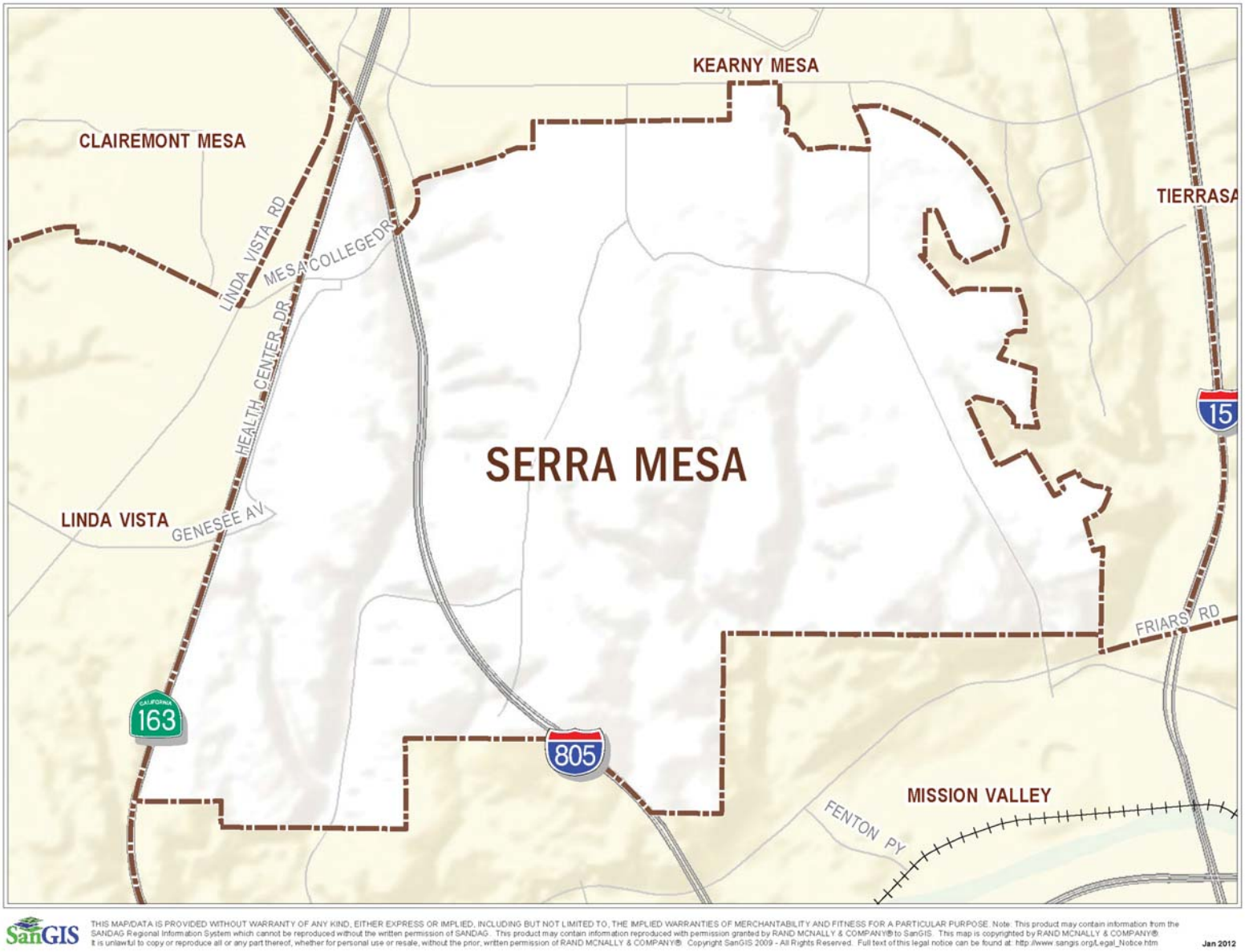

SanGIS THIS MAP/DATA IS PROVIDED WITHOUT WARRANTY OF ANY KIND, EITHER EXPRESS OR IMPLIED, INCLUDING BUT NOT LIMITED TO, THE IMPLIED WARRANTIES OF MERCHANTABILITY AND FITNESS FOR A PARTICULAR PURPOSE. Note: This product may contain information from the SANDAG Regional Information System which cannot be reproduced without the written permission of SANDAG. This product may contain information reproduced with permission granted by RAND MCNALLY & COMPANY® to SanGIS. This map is copyrighted by RAND MCNALLY & COMPANY®. It is unlawful to copy or reproduce all or any part thereof, whether for personal use or resale, without the prior, written permission of RAND MCNALLY & COMPANY®. Copyright SanGIS 2009 - All Rights Reserved. Full text of this legal notice can be found at: http://www.sangis.org/Legal_Notice.htm Jan 2012

Figure 1-2
Serra Mesa Community Plan

N

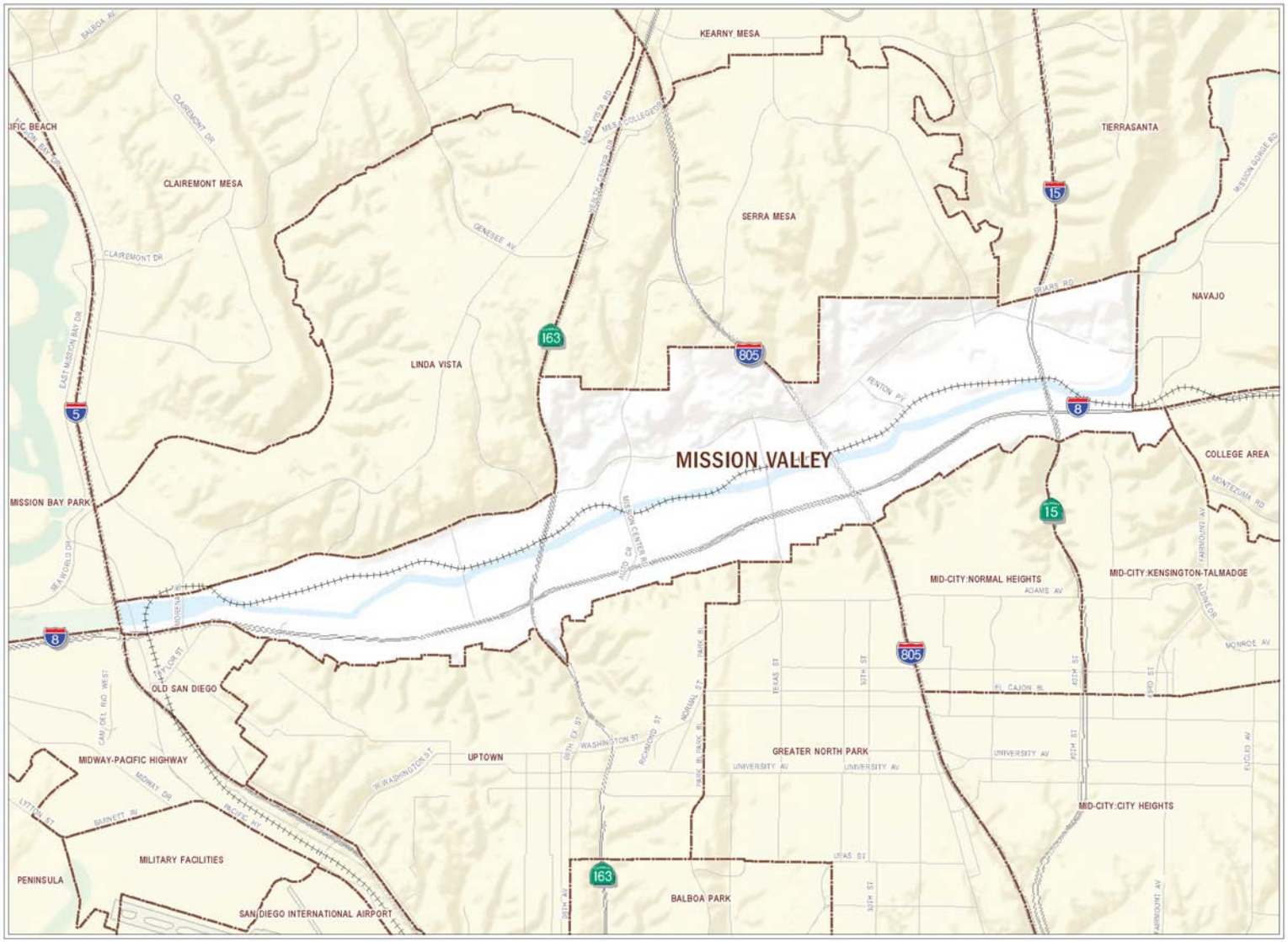

SanGIS THIS MAP/DATA IS PROVIDED WITHOUT WARRANTY OF ANY KIND, EITHER EXPRESS OR IMPLIED, INCLUDING BUT NOT LIMITED TO, THE IMPLIED WARRANTIES OF MERCHANTABILITY AND FITNESS FOR A PARTICULAR PURPOSE. Note: This product may contain information from the SANDAG Regional Information System which cannot be reproduced without the written permission of SANDAG. This product may contain information reproduced with permission granted by RAND MCNALLY & COMPANY® to SanGIS. This map is copyrighted by RAND MCNALLY & COMPANY® It is unlawful to copy or reproduce all or any part thereof, whether for personal use or resale, without the prior, written permission of RAND MCNALLY & COMPANY®. Copyright SanGIS 2009 - All Rights Reserved. Full text of this legal notice can be found at: http://www.sangis.org/Legal_Notice.htm Jan 2012

Figure 1-3
Mission Valley Community Plan

N

CHAPTER 2
METHODOLOGIES

This chapter documents the methodologies and assumptions used to conduct the traffic impact analysis for the improvement alternatives. The study methodology and analysis is conducted in accordance with the *SANTEC/ITE Guidelines for Preparing Traffic Impact Studies* and the *City of San Diego Traffic Impact Studies Manual*. These guidelines and the City's guidelines for significance determination are used to determine the project's potential significant impacts. This section contains the following background information:

- Study scenarios
- Study time periods
- Capacity analysis methodologies

STUDY SCENARIOS

This report presents an analysis of the following scenarios:

- Existing Conditions (2012)
- Opening Day (2017) without Franklin Ridge Road connection
- Opening Day (2017) with Franklin Ridge Road connection
- Horizon Year (2035) without Franklin Ridge Road connection
- Horizon Year (2035) with Franklin Ridge Road connection

ANALYSIS METHODOLOGIES

Street system operating conditions are typically described in terms of "level of service." Level of service is a report-card scale used to indicate the quality of traffic flow on roadway segments and at intersections. Level of service (LOS) ranges from LOS A (free flow, little congestion) to LOS F (forced flow, extreme congestion). A more detailed description of the concepts described in this section is provided in Appendix C of this document. The following methods are outlined in this publication and used in this study.

Intersection Capacity Analysis

The analysis of peak hour intersection performance was conducted using the Synchro analysis software program, which uses methodologies defined in the 2010 Highway Capacity Manual (HCM) to calculate results. Level of service (LOS) for intersections is determined by control delay. Control delay is defined as the total elapsed time from when a vehicle stops at the end of a queue to the time the vehicle departs from the stop line. The total elapsed time includes the time required for the vehicle to travel from the last-in-queue position to the first-in-queue position, including deceleration of vehicles from free-flow speed to the speed of vehicles in the queue. The software calculates the average expected delay per vehicle at an intersection, measured in seconds. The reported delay then correlates to a resulting LOS. Appendix C lists the HCM delay/LOS criteria for both signalized and unsignalized intersections.

Signalized Intersections

The HCM analysis methodology for evaluating signalized intersections is based on the "operational analysis" procedure. This technique uses 1,900 passenger cars per hour of green per lane (pcphgpl) as the maximum saturation flow of a single lane at an intersection. This saturation flow rate is adjusted to account for lane width, on-street parking, conflicting pedestrian flow, traffic composition, (e.g., the percentage of vehicles that are trucks) and shared lane movements (e.g., through and right-turn movements from the same lane). Average control delay is calculated by taking a volume-weighted average of all the delays for all vehicles entering the intersection.

All-way Stop-controlled (AWSC) Intersections

The HCM analysis methodology for evaluating All-Way Stop-controlled intersections is based on the degree of conflict for each independent approach created by the opposing approach and each conflicting approach. Level of Service for AWSC intersections is also based on the average control delay. However, AWSC intersections have different threshold values than those applied to signalized intersections. This is based on the ratio nale that drivers expect AWSC intersections to carry lower traffic volumes than at signalized intersections. Therefore, a higher level of delay is acceptable at a signalized intersection for the same LOS.

Two-way Stop-controlled (TWSC) Intersections

The HCM analysis methodology for evaluating Two-Way Stop-controlled (TWSC) intersections is based on gap acceptance and conflicting traffic for vehicles stopped on the minor-street approaches. The critical gap (or m inimum gap that would be acceptable) is defined as the minimum time interval i n the major-street traffic stream that allows intersection entry for one minor-street vehicle. Average control delay and LOS for the "worst approach" are reported. Level of service is not defined for the intersection as a whole.

Roadway Segment Capacity Analysis

The City of San Diego Traffic Impact Study Manual includes daily traffic volume standards for roadwa y level of service. To determ ine service levels on study area roadway segments, we com pared the appropriate average daily traffic thresholds for level of service to the daily capacity of the study area roadway segments, and the existing and future volumes in the study area. By dividing the volumes by the capacities we get a volume over capaci ty ratio (V/C) that correlates to a specific level of service (LOS). The thresholds for determining level of service used in this analysis are summarized in Appendix C.

Arterial Analysis

The HCM analy sis methodology for evaluating level of service along an arterial is defined by travel speed, expressed as a per centage of the base free-flow speed. First the base fr ee-flow speed is calculated taking together all street segments and speeds along each segment. The travel speed is then calculated taking into account delay at intersections and capacity based delay. This com bined with the spatial stop rate gives the travel speed which can then be com pared to the bas e free-flow speed. The thresholds for determining level of service used in this analysis are summarized in Appendix C.

FreewayMainline Analysis

The method for calculating freeway level of service is based on the volum e-to-capacity (V/C) ratio using the following equation:

$$V/C = \frac{[\,(ADT * \text{Peak hour percent} * \text{Directional factor})/\text{Truck factor}]}{\text{Capacity}}$$

where:
ADT = average daily traffic volume (2-way);
Peak hour percent = the proportion of ADT that occurs during the peak hour (not specifically AM or PM);
Directional factor = the proportion of peak hour traffic traveling in the peak direction;
Truck factor = a reduction in capacity to account for heavy vehicles and grades; and
Capacity = 2,300 vehicles per hour per lane.

The resultant v/c ratios are co mparedto the standard v/c thresholds for level of service contained in Appendix C.

Metered Freeway On-Ramp Conditions

Freeway ramp meters are designed to maximize mainline freeway capacity, reduce traffic congestion and reduce peak period delays. This is accomplished by regulating the flow of vehicles entering the freeway, allowing for traffic flow on the mainline to achieve reasonable speeds. If excess demand exists at freeway on-ramps, delays and considerable queue lengths could result on ramps and adjacent surface roadways. All freeway ramp meters were analyzed based on the most restrictive ramp metering rates provided by Caltrans. Appendix C contains the ramp meter rates obtained from Caltrans.

CHAPTER 3
EXISTING CONDITIONS (2012)

ROADWAY NETWORK

The principal roadways in the study area are described briefly below. The description includes the physical characteristics, adjacent land uses, and classification of these roadways.

Friars Road is an east-west regionally significant arterial that runs from the Navajo community to the east, where it becomes Mission Gorge Road and heads east into Santee, to Sea World Drive in Mission Bay to the west. Friars Road provides direct access to Qualcomm Stadium, Hazard Center and Fashion Valley Mall. Within the project study area, Friars Road functions as a 6-lane Expressway from Frazee Road to River Run Road, and a 6-lane Prime Arterial from River Run Road to Northside Drive. Friars Road has a Horizon Year ultimate classification of a 6-lane Expressway from Frazee Road to the I-15 freeway per the Mission Valley Community Plan. There is no parking on Friars Road within the project study area. Friars Road has Class II bike lanes. The speed limit is 50 mph.

Mission Center Road is a north-south arterial that connects the Serra Mesa Community to Friars Road and eventually to Interstate 8. It functions as a 4-lane Major Arterial between Mission Center Court and Friars Road with an ultimate classification of a 6-lane major. Mission Center Road then functions as a 5-lane Major Arterial between Friars Road and Mission Valley Road. From Mission Valley Road to Sevan Court (approximated at Acquatera Drive), Mission Center Road functions as a 4-lane Major which is also it's ultimate classification. Lastly, Mission Center Road then continues north as a 3-lane Collector from Sevan Court to the Interstate 805 overpass and a 2-lane Collector with no fronting property to Murray Ridge Road with an ultimate classification along this segment of a 4-lane collector. Mission Center Road provides access to the project site, and the speed limit is 35 mph. Parking is prohibited along Mission Center Road. Mission Center Road has Class II bike lanes and local bus route, #928.

Phyllis Place/Murray Ridge Road runs in a northeasterly direction. Currently it functions as a two lane collector from Abbots Hill Road to Pinecrest Avenue. Its ultimate classification in the Serra Mesa Community Plan (2000) is a 4-lane Major. Murray Ridge Road provides the Serra Mesa Community access to Interstate 805 and Mission Valley (via Mission Center Road). Parking currently exists on both sides for the majority of Phyllis Place and Murray Ridge Road. Murray Ridge Road also has Class II bike lanes and local bus route, #928.

Qualcomm Way runs north-south from Interstate 8 to Friars Road and provides direct access to the Civita development project site. The roadway functions as a 6-lane Major which is also it's ultimate classification. Raised medians and left-turn lanes at signalized intersections are provided. Parking along Qualcomm Way is prohibited. The roadway provides Class II bike lanes in both directions and the speed limit is 40 mph.

Rio San Diego Drive runs east/west parallel to Friars Road ultimately feeding back into Friars Road along cross streets. The roadway functions as a 4-lane Major roadway which is also it's ultimate classification per the Mission Valley Community Plan. Rio San Diego Drive has two lanes in each direction, a two-way left turn lane, and a center median at Qualcomm Way. Parking is permitted along both sides of Rio San Diego Drive within the project study area, from Qualcomm Way to Rio Bonito Way. Rio San Diego Drive does not have any bicycle facilities within the study area and does not serve any local bus routes.

Sandrock Road runs north-south connecting the community of Serra Mesa to the community of Kearny Mesa at Aero Drive. The roadway functions as a 2-lane collector with a continuous center turn lane.

Sandrock Road has an ultimate classification of a 4-lane major street per the Serra Mesa Community Plan. There are no existing bus routes that travel along Sandrock Road within the study area. Parking is permitted on both sides of the street and Class II buffered bike lanes currently exist along both sides of the roadway. The roadway provides road and driveway access to resdients within the study area. The posted speed limit of Sandrock Road from Murray Ridge Road to Aero Drive is 35 mph.

Civita Boulevard at the time of developing existing conditions, was just being constructed. It is a roadway that runs east-west and services the Civita development with 2 lanes in each direction and a center median.

Figures 3-1 and 3-2 illustrate the existing circulation network and the intersection geometric configuration.

EXISTING TRAFFIC VOLUMES

Intersection turning movement counts were conducted during the weekday morning peak period from 7:00 AM to 9:00 AM, during the weekday evening peak period from 4:00 PM to 6:00 PM in May 2011 and June 2013. Average segment daily traffic volumes were obtained through machine data collection during the months of May and June 2011. Additional counts were taken in June 2013 to verify and to confirm that the counts taken in 2011 were still valid. Counts were shown to either stay approximately the same or decrease between 2011 and 2013. The resultant existing weekday daily, morning and evening peak hour intersection volumes are shown in Figures 3-3 through 3-5. Appendix D includes existing traffic count data and also shows comparison tables between the 2011 counts and the 2013 counts that verified the validity of the counts.

EXISTING ANALYSIS

Roadway Segment Conditions

The existing roadway segment analysis is summarized in Table 3-1. As shown in Table 3-1, all roadway segments in the study area are calculated to operate at an acceptable LOS D or better based on City of San Diego's guidelines, except for the following:

- Murray Ridge Road from I-805 NB Ramp to Mission Center Road – **LOS F**
- Murray Ridge Road from Mission Center Road to Pinecrest Avenue – **LOS E**
- Mission Center Road from Acquatera Drive to Murray Ridge Road – **LOS E**

Intersection Conditions

The existing intersection analysis is summarized in Table 3-2. As shown in Table 3-2, all intersections in the study area are calculated to operate at an acceptable LOS D or better based on City of San Diego's guidelines.

Freeway Mainline Conditions

The existing freeway analysis is summarized in Table 3-4. As shown in Table 3-4, currently, the following freeway segment does not operate at LOS D or better:

- I-805 N from I-8 to Mesa College Drive Drive On-Ramp – **LOS F (AM)**
- I-805 N from Mesa College Drive On-Ramp to SR-163 – **LOS F (AM)**
- I-805 S from Mesa College Drive On-Ramp to Murray Ridge Road – **LOS F (PM)**

Freeway Ramp Meter Conditions

Ramp meter analysis was conducted at I-805 SB Ramp at Murray Ridge Road. Ramp meter rates were provided by Caltrans on February, 2012. Maximum delay method is based on the most restrictive ramp meter rate. Table 3–5 presents the results using the maximum delay method.

Appendix C contains the ramp meter rates.

As shown in Table 3–5, under existing conditions, there is no observed delay or queue on any of the existing ramps because the ramp meter rates are greater than the vehicle demand rates.

Appendix E includes existing peak hour intersection and arterial analysis worksheets.

Table 3-1
Existing Roadway Segment Conditions

Roadway Segment	Lanes/ Functional Class	LOS E Maximum Capacity	Without Connection		
			ADT	V/C	LOS
Friars Road					
Mission Center Rd to Qualcomm Way	6E	80,000	33,219	0.415	B
Qualcomm Way to Rio Bonito Way	6E	80,000	36,466	0.456	B
Rio Bonito Way to Northside Drive	6P	60,000	34,886	0.581	B
Mission Center Road					
Hazard Center Drive to Friars Road	4M	40,000	20,827	0.521	B
Friars Road to Mission Center Driveway (Westside Dr)	5M	45,000	22,759	0.506	B
Mission Center Driveway (Westside Dr) to Mission Valley Road	5M	45,000	20,013	0.445	B
Mission Valley Road to Acquatera Drive	4M	40,000	9,035	0.226	A
Acquatera Drive to Murray Ridge Road	2C NF	10,000	9,035	0.904	E
Murray Ridge Road					
I-805 NB Ramp to Mission Center Road	2C CL	15,000	17,441	1.163	F
Mission Center Road to Pinecrest Avenue	2C CL	15,000	14,074	0.938	E
Pinecrest Avenue to Sandrock Road	2C CL	15,000	9,502	0.633	C
Phyllis Place					
Abbotshill Road to I-805 SB Ramp	2C NF	10,000	2,420	0.242	A
I-805 SB Ramp to I-805 NB Ramp	2C CL	15,000	10,770	0.718	D
Qualcomm Way					
Civitas Boulevard to Friars Road WB Ramp	6M	50,000	1,858	0.037	A
Friars Road WB Ramp to Friars Road EB Ramp	6M	50,000	9,367	0.187	A
Friars Road EB Ramp to Rio San Diego Drive	6M	50,000	14,050	0.281	A
Rio San Diego Drive					
Qualcomm Way to Rio Bonito Way	4C	30,000	18,420	0.614	C
Sandrock Road					
Murray Ridge Road to Aero Drive	2C CL	15,000	10,686	0.712	D

Abbreviations: 2C CL: 2 lane Collector with a continuous left-turn lane. 2C NF: 2 lane collector with no fronting property. 4C: 4 lane Collector. 4M: 4 lane Major Street. 5M: 5 lane Major Street. 6E: 6 lane Expressway. 6M: 6 lane Major. 6P: 6 lane Prime Arterial.

Table 3-2
Existing Intersection Conditions

Intersection	Peak	Existing Conditions	
		Delay	LOS
01. Friars Rd & River Run Rd	AM	10.8	B
	PM	14.6	B
02. Friars Rd & Fenton Pkwy	AM	20.8	C
	PM	24.1	C
03. Friars Rd & Northside Dr	AM	17.1	B
	PM	43.4	D
04. Mission Center Rd & Murray Ridge Rd/Phyllis Pl	AM	29.6	C
	PM	29.5	C
05. Mission Center Rd & Acquaterra Dr	AM	16	B
	PM	15.7	B
06. Mission Center Rd & Mission Valley Rd (Civitas Blvd)	AM	19	B
	PM	22.1	C
07. Mission Center Rd & Westside Dr (Mission Ctr. Drwy)	AM	16.6	B
	PM	17.1	B
08. Mission Center Rd & Friars Rd / EB Ramps	AM	8.5	A
	PM	12.6	B
09. Mission Center Rd & Friars Rd / WB Ramps	AM	9.1	A
	PM	11.3	B
10. Mission Center Rd & Mission Center Crt	AM	13.9	B
	PM	23.5	C
11. Aero Dr & Sandrock Rd	AM	8.6	A
	PM	7.7	A
12. Murray Ridge Rd and Sandrock Rd	AM	17.6	B
	PM	17.6	B
13. Murray Ridge Rd and Pinecrest Ave	AM	13.8	B
	PM	14	B
14. Murray Ridge Rd & I-805 NB Ramp	AM	8.8	A
	PM	10	A
15. Murray Ridge Rd & I-805 SB Ramp	AM	14	B
	PM	19.8	B
16. Qualcomm Way & Friars Rd EB Ramp	AM	10.8	B
	PM	10.4	B
17. Qualcomm Way & Friars Rd WB Ramp	AM	19	B
	PM	20.4	C
18. Qualcomm Way & Rio San Diego Dr	AM	12.5	B
	PM	21	C
19. Rio San Diego Dr & Rio Bonito Wy	AM	14.6	B
	PM	15.4	B

Table 3-3
Existing Freeway Mainline Conditions

Freeway Segment	AM/PM	LOS E Capacity	Existing Conditions		
			PHV	V/C	LOS
I-805 Northbound					
SR-163 to Mesa College Drive On-Ramp	AM	11,200	10,264	0.916	D
	PM	11,200	5,180	0.463	B
Mesa College Drive On-Ramp to Murray Ridge Rd	AM	11,200	11,625	1.038	**F**
	PM	11,200	5,866	0.524	B
Murray Ridge Rd to I-8	AM	11,200	11,834	1.057	**F**
	PM	13,000	5,972	0.533	B
I-805 Southbound					
SR-163 to Mesa College Drive On-Ramp	AM	11,200	4,454	0.398	A
	PM	11,200	10,177	0.909	D
Mesa College Drive On-Ramp to Murray Ridge Rd	AM	11,200	5,044	0.450	B
	PM	11,200	11,526	1.029	**F**
Murray Ridge Rd to I-8	AM	11,200	5,135	0.395	A
	PM	13,000	11,734	0.903	D

Peak Hour Volume = (ADT)(K)(D)/(Truck Factor))
V/C = Peak Hour Volume / Capacity
Truck Source: 2012 Annual Average Daily Truck Traffic on the California State Highway System
ADT Source: 2012 Traffic Volumes on the California State Highway System
K/D Source: 2012 K and D Factors on the California State Highway System

Table 3-4
Existing Freeway Ramp Meter Conditions

Location	Meter Rate (veh/hr)	Existing Conditions			
		Demand (veh/hr)	Excess Demand (veh/hr)	Delay (min)	Queue (ft)
AM Peak Hour					
Murray Ridge - I805 NB Ramp	851	299	0	0	0
Murray Ridge - I805 SB Ramp	691	309	0	0	0
Murray Ridge - I805 SB Ramp (HOV)	691	34	0	0	0
PM Peak Hour					
Murray Ridge - I805 NB Ramp	691	350	0	0	0
Murray Ridge - I805 SB Ramp	691	520	0	0	0
Murray Ridge - I805 SB Ramp (HOV)	691	58	0	0	0

Source: Caltrans January 2015

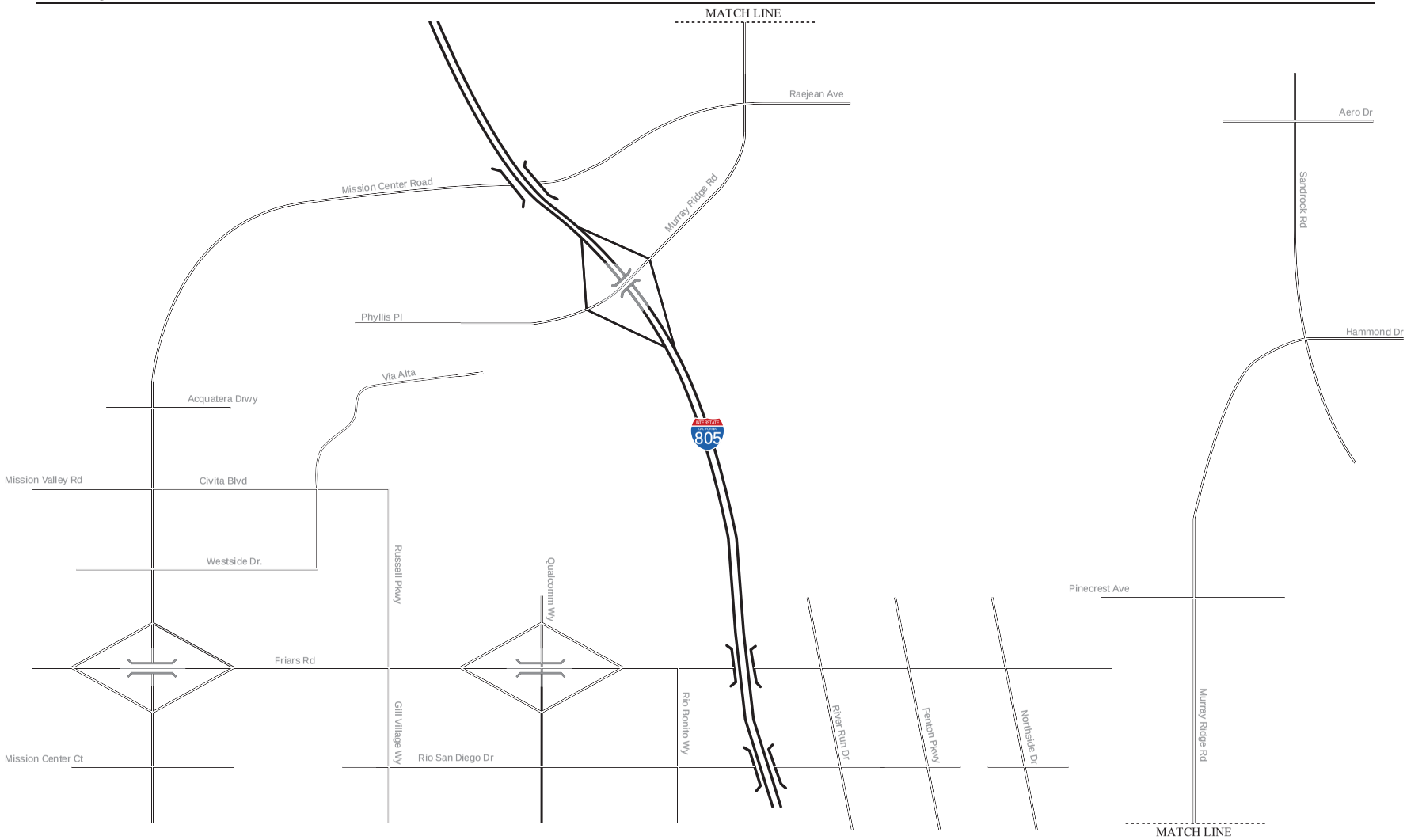

Figure 3-1
Existing Circulation Network

Figure 3-2
Existing Geometric Configurations

Figure 3-3
Existing Daily Roadway Segment Volumes

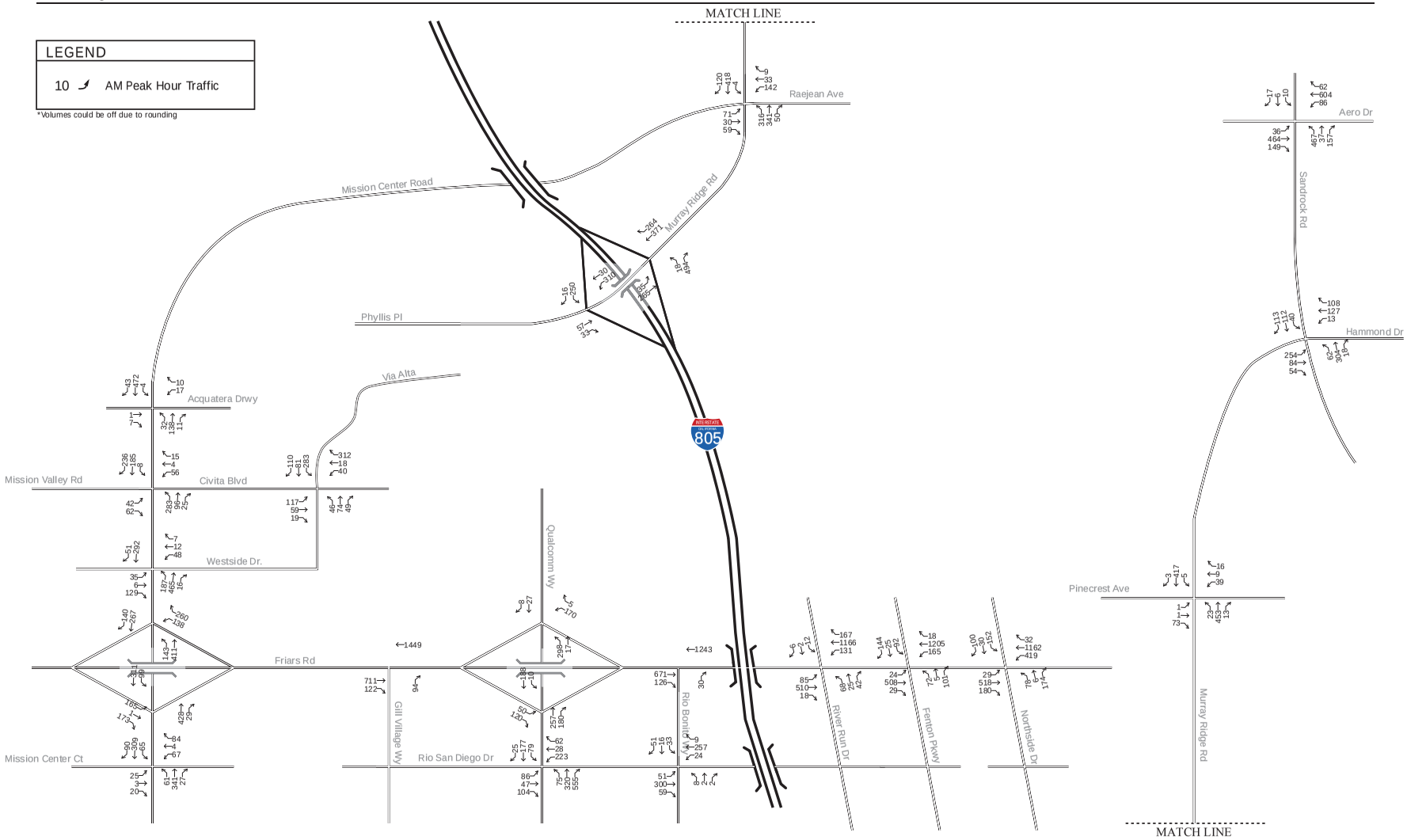

Figure 3-4
Existing AM Peak Hour Intersection Volumes

Figure 3-5
Existing PM Peak Hour Intersection Volumes

CHAPTER 4
OPENING DAY (2017) WITHOUT CONNECTION CONDITIONS

ROADWAY NETWORK

The Opening Day (2017) conditions Without Connection represent the conditions when the Franklin Ridge Road connection is expected to be completed, but without the road connection in place. Regionally, the SR-163 / Friars Road interchange will not have been completed yet, nor would the Hazard Center Road extension, but other regional improvements beyond the study are included in SANDAG's model. The existing principal roadways within the study area were described briefly in Chapter 3. The principal roadways that have been added or extended within the study area since the Existing Conditions (2012) are described briefly below. The description includes the physical characteristics, adjacent land uses, and classification of these roadways.

Civita Boulevard is an east-west four-lane major roadway that will provide vehicular, pedestrian and bicycle connection between Mission Center Road on the west and Qualcomm Way on the East. A center median runs along the entirety of Civita Boulevard. Parallel parking and Class II bike lanes will occur on both sides of the roadway. By Opening Day (2017) conditions, Civita Boulevard will be completed and in use all the way from Mission Center Road to Qualcomm Way.

Franklin Ridge Road will provide north-south travel through Civita as a modified two-lane collector road with a center median. For analysis purposes the roadway will be classified as a 2-lane major street. It begins at the eastern terminus of Civita Boulevard and travels north. Franklin Ridge Road is then designed to meet at the north end of the Civita development with Via Alta. Parking will be prohibited on both sides of Franklin Ridge Road and it is planned to have Class II bike lanes.

Russell Park Way provides access into Civita from Friars Road for right-turn in/right-turn out only movements. It will enter Civita as a modified two-lane collector constructed with a center median. For analysis purposes the roadway will be classified as a 2-lane major street. Class II bike lanes will be provided on both sides of the street that connect to existing bike lanes on Friars Road.

Via Alta runs in north-south direction, travelling through Civita as a modified two-lane collector. A center median runs along Via Alta. For analysis purposes the roadway will be classified as a 2-lane major street. It begins at Westside Drive and continues north till it meets with Franklin Ridge Road at the north end of the Civita development. Class II bike lanes are planned along Via Alta and parking is prohibited along both sides of the roadway

Westside Drive runs in an east-west direction, parallel to Civita Boulevard, and connects Mission Center Road and Via Alta, providing additional vehicular and pedestrian circulation. Westside Drive is a two-lane collector without a center median and within a 66 foot wide right of way with parallel parking on both sides. There is no bicycle facility along Westside Drive.

Figures 4-1 and 4-2 illustrate the Opening Day (2017) circulation network and the intersection geometric configuration.

OPENING DAY (2017) VOLUMES

Traffic growth to the roadway network within the study area by 2017 is a function of expected land development, and economic activity. City staff worked with SANDAG and their computerized travel forecast model called Series 12. Specific land use inputs were used to generate volumes within the study

area and regional volumes were generated by interpolating between the two nearest model years. As part of this, City staff also accounted for all known and proposed development projects that were not otherwise in the model that would affect the study area. Intersection volumes were then produced taking into consideration the relationship between existing turn movements, future ADT volumes, and peak hour growth and directional factors.

OPENING DAY (2017) WITHOUT CONNECTION ANALYSIS

Roadway Segment Conditions

The Opening Day (2017) without connection roadway segment analysis is summarized in Table 4-1. As shown in Table 4-1, all roadway segments in the study area are calculated to operate at an acceptable LOS D or better based on City of San Diego's guidelines, except for the following:

- Murray Ridge Road from I-805 NB Ramp to Mission Center Road – **LOS F**
- Murray Ridge Road from Mission Center Road to Pinecrest Avenue – **LOS F**
- Mission Center Road from Acquatera Drive to Murray Ridge Road – **LOS F**

Intersection Conditions

The Opening Day (2017) without connection intersection analysis is summarized in Table 4-2. As shown in Table 4-2, all intersections in the study area are calculated to operate at an acceptable LOS D or better based on City of San Diego's guidelines, except for the following:

- Friars Road / Northside Drive – **LOS E (PM)**

Freeway Mainline Conditions

The Opening Day (2017) without connection freeway analysis is summarized in Table 4-4. As shown in Table 4-4, currently, the following freeway segments will not operate at LOS D or better:

- I-805 N from I-8 to SR-163 – **LOS F (AM)**
- I-805 S from SR-163 to I-8 – **LOS F (PM)**

Metered Freeway On-Ramp Conditions

Ramp meter analysis was conducted at I-805 SB Ramp at Murray Ridge Road. Ramp meter rates were provided by Caltrans. Maximum delay method is based on the most restrictive ramp meter rate. Table 4–5 presents the results using the maximum delay method.

As shown in Table 4–5, under Opening Day (2017) without connection conditions, all ramps are calculated to operate with less than 15 minutes of delay.

Appendix F includes Opening Day (2017) without connection peak hour intersection and arterial analysis worksheets.

Table 4-1
Opening Day (2017) Without Connection Segment Conditions

Roadway Segment	Lanes/ Class	LOS E Capacity	Existing Conditions			Δ ADT	Without Connection			Comparison	
			ADT	V/C	LOS		ADT	V/C	LOS	Δ V/C	Significant?
Civitas Boulevard											
Mission Center Road to Via Alta	4M	40,000				8,819	8,819	0.220	A	0.220	No
Via Alta to Russel Parkway	4M	40,000				17,349	17,349	0.434	B	0.434	No
Russel Parkway to Qualcomm Way	4M	40,000				16,705	16,705	0.418	B	0.418	No
Qualcomm Way to Franklin Ridge Road	4M	40,000				7,697	7,697	0.192	A	0.192	No
Franklin Ridge Road											
Via Alta to Civitas Boulevard	2M	16,667				6,912	6,912	0.415	B	0.415	No
Friars Road											
Mission Center Road to Qualcomm Way	6E	80,000	33,219	0.415	B	14,725	47,944	0.599	C	0.184	No
Qualcomm Way to Rio Bonito Way	6E	80,000	36,466	0.456	B	1,266	37,732	0.472	B	0.016	No
Rio Bonito Way to Northside Drive	6P	60,000	34,886	0.581	B	700	35,586	0.593	C	0.012	No
Mission Center Road											
Hazard Center Drive to Friars Road	4M	40,000	20,827	0.521	B	5,926	26,753	0.669	C	0.148	No
Friars Road to Mission Center Driveway (Creekside Park Lane)	5M	45,000	22,759	0.506	B	627	23,386	0.520	B	0.014	No
Mission Center Driveway (Creekside Park Lane) to Mission Valley Road	5M	45,000	20,013	0.445	B	-3,591	16,422	0.365	A	-0.080	No
Mission Valley Road to Acquatera Drive	4M	40,000	9,035	0.226	A	9,123	18,158	0.454	B	0.228	No
Acquatera Drive to Murray Ridge Road	2C NF	10,000	9,035	0.904	E	9,123	18,158	1.816	F	0.912	**Yes**
Murray Ridge Road											
I-805 NB Ramp to Mission Center Road	2C CL	15,000	17,441	1.163	F	6,373	23,814	1.588	F	0.425	**Yes**
Mission Center Road to Pinecrest Avenue	2C CL	15,000	14,074	0.938	E	2,830	16,904	1.127	F	0.189	**Yes**
Pinecrest Avenue to Sandrock Road	2C CL	15,000	9,502	0.633	C	3,099	12,601	0.840	D	0.207	No
Phyllis Place											
Abbotshill Road to I-805 SB Ramp	2C NF	10,000	2,420	0.242	A	0	2,420	0.242	A	0.000	No
I-805 SB Ramp to I-805 NB Ramp	2C CL	15,000	10,770	0.718	D	15	10,785	0.719	D	0.001	No

Roadway Segment	Lanes/ Class	LOS E Capacity	Existing Conditions			Δ ADT	Without Connection			Comparison	
			ADT	V/C	LOS		ADT	V/C	LOS	Δ V/C	Significant?
Qualcomm Way											
Civitas Boulevard to Friars Road WB Ramp	6M	50,000	1,858	0.037	A	16,239	18,097	0.362	A	0.325	No
Friars Road WB Ramp to Friars Road EB Ramp	6M	50,000	9,367	0.187	A	7,632	16,999	0.340	A	0.153	No
Friars Road EB Ramp to Rio San Diego Drive	6M	50,000	14,050	0.281	A	6,510	20,560	0.411	B	0.130	No
Rio San Diego Drive											
Qualcomm Way to Rio Bonito Way	4C	30,000	18,420	0.614	C	2,497	20,917	0.697	D	0.083	No
Russell Park Way											
Civitas Boulevard to Friars Road	2M	16,667				10,300	10,300	0.618	C	0.618	No
Sandrock Road											
Murray Ridge Road to Aero Drive	2C CL	15,000	10,686	0.712	D	-179	10,507	0.700	D	-0.012	No
Westside Drive											
Mission Center Road to Via Alta	2C CL	15,000				7,174	7,174	0.478	C	0.478	No
Via Alta											
Franklin Ridge Road to Civitas Boulevard	2M	16,667				2,957	2,957	0.177	A	0.177	No
Civitas Boulevard to Westside Drive	2M	16,667				3,435	3,435	0.206	A	0.206	No

Abbreviations: 2C CL: 2 lane Collector with a continuous left-turn lane. 2C NF: 2 lane collector with no fronting property. 4M: 4 lane Major Street. 6E: 6 lane Expressway. 6M: 6 lane Major. 6P: 6 lane Prime Arterial.

Table 4-2
Opening Day (2017) Without Connection Intersection Conditions

Intersection	Peak	Existing Conditions		NT WO Connection		Comparison	
		Delay	LOS	Delay	LOS	Δ Delay	Significant?
01. Friars Rd & River Run Rd	AM	10.8	B	11.1	B	0.3	No
	PM	14.6	B	18.7	B	4.1	No
02. Friars Rd & Fenton Pkwy	AM	20.8	C	20.6	C	-0.2	No
	PM	24.1	C	30.3	C	6.2	No
03. Friars Rd & Northside Dr	AM	17.1	B	17.4	B	0.3	No
	PM	43.4	D	64.7	E	21.3	**Yes**
04. Mission Center Rd & Murray Ridge Rd/Phyllis Pl	AM	29.6	C	41.5	D	11.9	No
	PM	29.5	C	53.5	D	24	No
05. Mission Center Rd & Acquaterra Dr	AM	16	B	17.4	B	1.4	No
	PM	15.7	B	16.5	B	0.8	No
06. Mission Center Rd & Mission Valley Rd (Civitas Blvd)	AM	19	B	21.5	C	2.5	No
	PM	22.1	C	25.4	C	3.3	No
07. Mission Center Rd & Westside Dr (Mission Ctr. Drwy)	AM	16.6	B	16.8	B	0.2	No
	PM	17.1	B	15.1	B	-2	No
08. Mission Center Rd & Friars Rd / EB Ramps	AM	8.5	A	11	B	2.5	No
	PM	12.6	B	15.2	B	2.6	No
09. Mission Center Rd & Friars Rd / WB Ramps	AM	9.1	A	10	A	0.9	No
	PM	11.3	B	15.2	B	3.9	No
10. Mission Center Rd & Mission Center Crt	AM	13.9	B	15	B	1.1	No
	PM	23.5	C	25.9	C	2.4	No
11. Aero Dr & Sandrock Rd	AM	8.6	A	10.6	B	2	No
	PM	7.7	A	13.1	B	5.4	No
12. Murray Ridge Rd and Sandrock Rd	AM	17.6	B	17.6	B	0	No
	PM	17.6	B	32.7	C	15.1	No
13. Murray Ridge Rd and Pinecrest Ave	AM	13.8	B	15.5	B	1.7	No
	PM	14	B	16.7	B	2.7	No
14. Murray Ridge Rd & I-805 NB Ramp	AM	8.8	A	9.9	A	1.1	No
	PM	10	A	11	B	1	No
15. Murray Ridge Rd & I-805 SB Ramp	AM	14	B	14	B	0	No
	PM	19.8	B	21.8	C	2	No
16. Qualcomm Way & Friars Rd EB Ramp	AM	10.8	B	15.8	B	5	No
	PM	10.4	B	18.5	B	8.1	No
17. Qualcomm Way & Friars Rd WB Ramp	AM	19	B	25	C	6	No
	PM	20.4	C	53.9	D	33.5	No
18. Qualcomm Way & Rio San Diego Dr	AM	12.5	B	12.8	B	0.3	No
	PM	21	C	25.4	C	4.4	No
19. Rio San Diego Dr & Rio Bonito Wy	AM	14.6	B	14.5	B	-0.1	No
	PM	15.4	B	14.9	B	-0.5	No

Intersection	Peak	Existing Conditions		NT WO Connection		Comparison	
		Delay	LOS	Delay	LOS	Δ Delay	Significant?
20. Phyllis Pl & Franklin Ridge Rd	AM						
	PM						
21. Via Alta & Franklin Ridge Rd	AM			25.9	C	25.9	No
	PM			22.2	C	22.2	No
22. Via Alta & Civitas Boulevard	AM			14.2	B	14.2	No
	PM			16.5	B	16.5	No
23. Civitas Blvd & Russel Pkwy/Gill Village Dr	AM			17.4	B	17.4	No
	PM			19.5	B	19.5	No
24. Qualcomm Way & Civitas Blvd	AM			15.5	B	15.5	No
	PM			15.3	B	15.3	No

Table 4-3
Opening Day (2017) Without Connection Freeway Mainline Conditions

Freeway Segment	AM/PM	LOS E Capacity	Existing Conditions			Near Term Without Connection			Comparison	
			PHV	V/C	LOS	PHV	V/C	LOS	Δ V/C	Significant?
I-805 Northbound										
SR-163 to Mesa College Drive On-Ramp	AM	11,200	10,264	0.916	D	14,339	1.280	F	0.364	**Yes**
	PM	11,200	5,180	0.463	B	7,236	0.646	C	0.183	No
Mesa College Drive On-Ramp to Murray Ridge Rd	AM	11,200	11,625	1.038	F	15,854	1.416	F	0.378	**Yes**
	PM	11,200	5,866	0.524	B	8,001	0.714	C	0.190	No
Murray Ridge Rd to I-8	AM	11,200	11,834	1.057	F	15,859	1.416	F	0.359	**Yes**
	PM	13,000	5,972	0.533	B	8,003	0.715	C	0.182	No
I-805 Southbound										
SR-163 to Mesa College Drive On-Ramp	AM	11,200	4,454	0.398	A	6,222	0.556	B	0.158	No
	PM	11,200	10,177	0.909	D	14,217	1.269	F	0.360	**Yes**
Mesa College Drive On-Ramp to Murray Ridge Rd	AM	11,200	5,044	0.450	B	6,879	0.614	B	0.164	No
	PM	11,200	11,526	1.029	F	15,720	1.404	F	0.375	**Yes**
Murray Ridge Rd to I-8	AM	11,200	5,135	0.395	A	6,881	0.529	B	0.134	No
	PM	13,000	11,734	0.903	D	15,724	1.210	F	0.307	**Yes**

Peak Hour Volume = (ADT)(K)(D)/(Truck Factor))

V/C = Peak Hour Volume / Capacity
Truck Source: 2012 Annual Average Daily Truck Traffic on the CA State Highway System

K/D Source: 2012 K and D Factors on the California State Highway System

Table 4-4
Opening Day (2017) Without Connection Freeway Ramp Meter Conditions

Location	Meter Rate (veh/hr)	Existing Conditions				Near Term Without Connection				Comparison	
		Demand (veh/hr)	Excess Demand (veh/hr)	Delay (min)	Queue (ft)	Demand (veh/hr)	Excess Demand (veh/hr)	Delay (min)	Queue (ft)	Δ Delay	Sign-ificant
AM Peak Hour											
Murray Ridge - I805 NB Ramp	851	299	0	0	0	368	0	0	0	0	No
Murray Ridge - I805 SB Ramp	691	309	0	0	0	366	0	0	0	0	No
Murray Ridge - I805 SB Ramp (HOV)	691	34	0	0	0	41	0	0	0	0	No
PM Peak Hour											
Murray Ridge - I805 NB Ramp	691	350	0	0	0	518	0	0	0	0	No
Murray Ridge - I805 SB Ramp	691	520	0	0	0	542	0	0	0	0	No
Murray Ridge - I805 SB Ramp (HOV)	691	58	0	0	0	60	0	0	0	0	No

Source: Caltrans January 2015

Figure 4-1

Opening Day Without Connection Circulation Network

N

Figure 4-2
Opening Day Geometric Configurations

Figure 4-3
Opening Day Without Connection Daily Roadway Segment Volumes

Figure 4-4
Opening Day Without Project Conditions AM Peak Hour Intersection Volumes

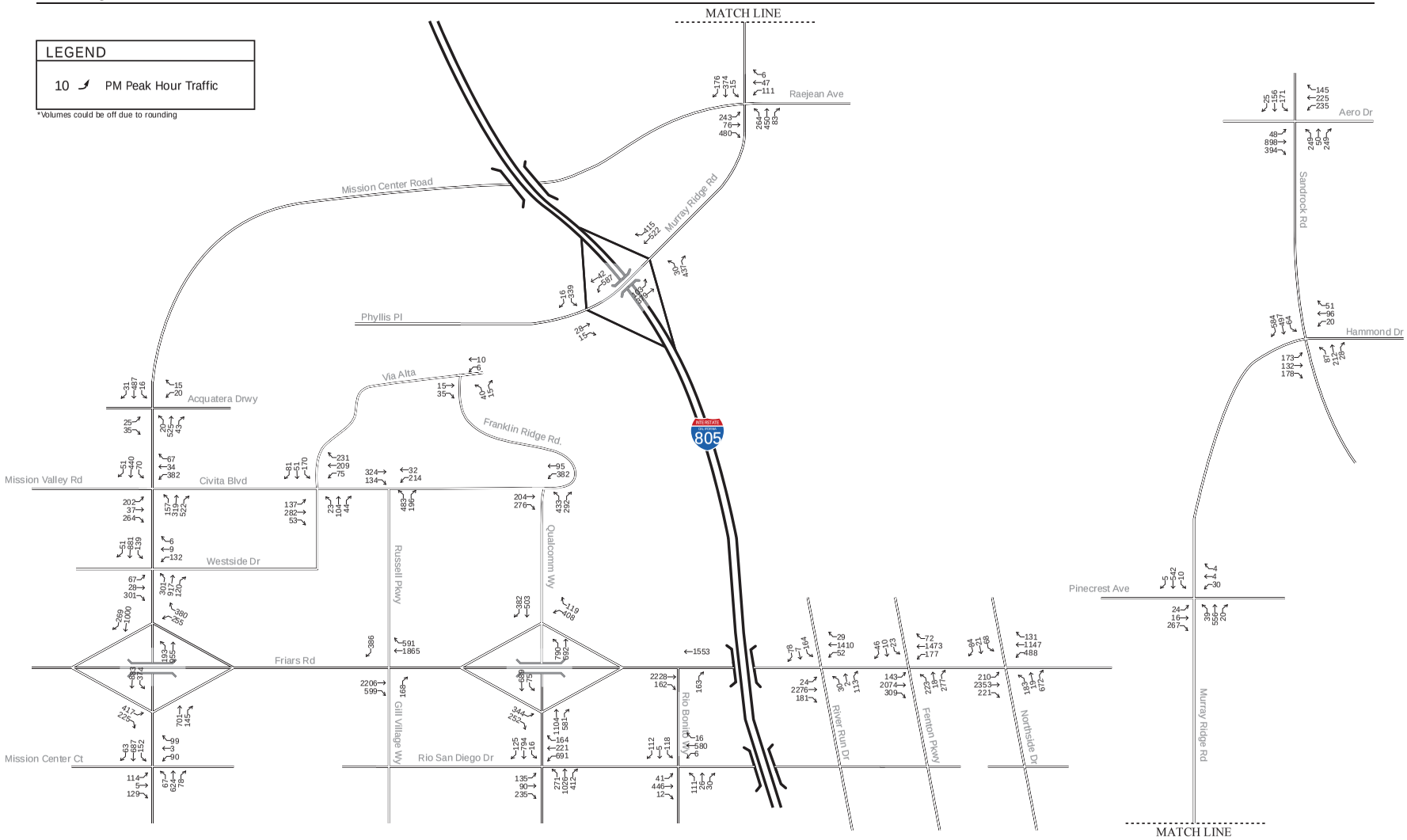

Figure 4-5
Opening Day Without Project Conditions PM Peak Hour Intersection Volumes

CHAPTER 5
OPENING DAY (2017) WITH CONNECTION CONDITIONS

ROADWAY NETWORK

The Opening Day (2017) with connection conditions represents Opening Day (2017) of the proposed Franklin Ridge Road connection. The roadway network conditions described in Chapter 4 are not expected to change.

OPENING DAY (2017) WITH CONNECTION

Roadway Segment Conditions

The Opening Day (2017) with connection roadway segment analysis is summarized in Table 5-1. As shown in Table 5-1, all roadway segments in the study area are calculated to operate at an acceptable LOS D or better based on City of San Diego's guidelines, except for the following:

- Phyllis Place from Franklin Ridge Road to I-805 SB Ramp – **LOS F**
- Phyllis Place from I-805 SB Ramp to I-805 NB Ramp – **LOS F**
- Murray Ridge Road from I-805 NB Ramp to Mission Center Road – **LOS F**
- Murray Ridge Road from Mission Center Road to Pinecrest Avenue – **LOS F**
- Murray Ridge Road from Pinecrest Avenue to Sandrock Road – **LOS E**

Intersection Conditions

The Opening Day (2017) with connection intersection analysis is summarized in Table 5-2. As shown in Table 5-2, all intersections in the study area are calculated to operate at an acceptable LOS D or better based on City of San Diego's guidelines, except for the following:

- Friars Road / Northside Drive – **LOS E (PM)**
- Qualcomm Way / Friars Road WB Ramp – **LOS E (PM)**
- Murray Ridge Road / I-805 NB Ramp – **LOS E (PM)**
- Murray Ridge Road / I-805 SB Ramp – **LOS F (PM)**
- Via Alta / Franklin Ridge Road – **LOS E (AM)**
- Via Alta / Franklin Ridge Road – **LOS F (PM)**

Freeway Mainline Conditions

The Opening Day (2017) with connection freeway analysis is summarized in Table 5-4. As shown in Table 5-4, currently, the following freeway segment does not operate AT LOS D or better:

- I-805 N from I-8 to SR-163 – **LOS F (AM)**
- I-805 S from SR-163 to I-8 – **LOS F (PM)**

Freeway Ramp Meter Conditions

Ramp meter analysis was conducted at I-805 SB Ramp at Murray Ridge Road. Ramp meter rates were provided by Caltrans. Maximum delay method is based on the most restrictive ramp meter rate. Table 5–5 presents the results using the maximum delay method.

As shown in Table 5–5, under Opening Day (2017) with connection, all ramps are calculated to operate with less than 15 minutes of delay except:

- I-805 NB Ramp at Murray Ridge Road – **21 min. of delay (PM)**

Appendix G includes Opening Day (2017) with connection peak hour intersection and arterial analysis worksheets. Appendix H includes Opening Day (2017) with connection and mitigation peak hour instersection worksheets.

Table 5-1
Opening Day (2017) With Connection Segment Conditions

Roadway Segment	Lanes/ Class	LOS E Capacity	Existing Conditions			Δ ADT	WithConnection			Comparison		With Mitigation		
			ADT	V/C	LOS		ADT	V/C	LOS	V/C	Significant ?	New Lanes / Config.	New LOS E Cap.	New LOS
Civitas Boulevard														
Mission Center Road to Via Alta	4M	40,000				5,227	5,227	0.131	A	0.131	No			
Via Alta to Russel Parkway	4M	40,000				11,403	11,403	0.285	A	0.285	No			
Russel Parkway to Qualcomm Way	4M	40,000				11,810	11,810	0.295	A	0.295	No			
Qualcomm Way to Franklin Ridge Road	4M	40,000				9,897	9,897	0.247	A	0.247	No			
Franklin Ridge Road														
Via Alta to Civitas Boulevard	2M	16,667				12,620	12,620	0.757	C	0.757	No			
Friars Road														
Mission Center Road to Qualcomm Way	6E	80,000	33,219	0.415	B	7,199	40,418	0.505	B	0.090	No			
Qualcomm Way to Rio Bonito Way	6E	80,000	36,466	0.456	B	3,000	39,466	0.493	B	0.038	No			
Rio Bonito Way to Northside Drive	6P	60,000	34,886	0.581	B	1,914	36,800	0.613	C	0.032	No			
Mission Center Road														
Hazard Center Drive to Friars Road	4M	40,000	20,827	0.521	B	5,081	25,908	0.648	C	0.127	No			
Friars Road to Mission Center Driveway (Creekside Park Lane)	5M	45,000	22,759	0.506	B	-3,163	19,596	0.435	B	-0.070	No			
Mission Center Driveway (Creekside Park Lane) to Mission Valley Road	5M	45,000	20,013	0.445	B	-6,461	13,552	0.301	A	-0.144	No			
Mission Valley Road to Acquatera Drive	4M	40,000	9,035	0.226	A	-898	8,137	0.203	A	-0.022	No			
Acquatera Drive to Murray Ridge Road	2C NF	10,000	9,035	0.904	E	-898	8,137	0.814	D	-0.090	No			
Murray Ridge Road														
I-805 NB Ramp to Mission Center Road	2C CL	15,000	17,441	1.163	F	724	18,165	1.211	F	0.048	**Yes**	4C[1]	30,000	D
Mission Center Road to Pinecrest Avenue	2C CL	15,000	14,074	0.938	E	4,037	18,111	1.207	F	0.269	**Yes**	4C[1]	30,000	C
Pinecrest Avenue to Sandrock Road	2C CL	15,000	9,502	0.633	C	3,974	13,476	0.898	E	0.265	**Yes**	4C[1]	30,000	C

Roadway Segment	Lanes/ Class	LOS E Capacity	Existing Conditions			Δ ADT	WithConnection			Comparison		With Mitigation		
			ADT	V/C	LOS		ADT	V/C	LOS	V/C	Significant ?	New Lanes / Config.	New LOS E Cap.	New LOS
Phyllis Place														
Abbotshill Road to Franklin Ridge Road	2C NF	10,000	2,420	0.242	A	0	2,420	0.242	A	0.000	No			
Franklin Ridge Road to I-805 SB Ramp	2C NF	10,000	2,420	0.242	A	20,935	23,355	2.336	F	2.094	**Yes**	4C[1]	30,000	D
I-805 SB Ramp to I-805 NB Ramp	2C CL	15,000	10,770	0.718	D	6,829	17,599	1.173	F	0.455	**Yes**	4C	30,000	C
Qualcomm Way														
Civitas Boulevard to Friars Road WB Ramp	6M	50,000	1,858	0.037	A	17,547	19,405	0.388	A	0.351	No			
Friars Road WB Ramp to Friars Road EB Ramp	6M	50,000	9,367	0.187	A	9,638	19,005	0.380	A	0.193	No			
Friars Road EB Ramp to Rio San Diego Drive	6M	50,000	14,050	0.281	A	9,364	23,414	0.468	B	0.187	No			
Rio San Diego Drive														
Qualcomm Way to Rio Bonito Way	4C	30,000	18,420	0.614	C	3,520	21,940	0.731	D	0.117	No			
Russell Park Way														
Civitas Boulevard to Friars Road	2M	16,667				9,600	9,600	0.576	C	0.576	No			
Sandrock Road														
Murray Ridge Road to Aero Drive	2C CL	15,000	10,686	0.712	D	680	11,366	0.758	D	0.045	No			
Westside Drive														
Mission Center Road to Via Alta	2C CL	15,000				8,744	8,744	0.583	C	0.583	No			
Via Alta														
Franklin Ridge Road to Civitas Boulevard	2M	16,667				9,476	9,476	0.569	C	0.569	No			
Civitas Boulevard to Westside Drive	2M	16,667				5,005	5,005	0.300	A	0.300	No			

Abbreviations: 2C CL: 2 lane Collector with a continuous left-turn lane. 2C NF: 2 lane collector with no fronting property. 4M: 4 lane Major Street. 6E: 6 lane Expressway. 6M: 6 lane Major. 6P: 6 lane Prime Arterial.

[1] See Chapter 9 for Segment Mitigations

Table 5-2
Opening Day (2017) With Connection Intersection Conditions

Intersection	Peak	Existing Conditions		NT WP Connection		Comparison		With Mitigation	
		Delay	LOS	Delay	LOS	Δ Delay	Significant?	Delay	LOS
01. Friars Rd & River Run Rd	AM	10.8	B	10.6	B	-0.2	No		
	PM	14.6	B	17.4	B	2.8	No		
02. Friars Rd & Fenton Pkwy	AM	20.8	C	20.4	C	-0.4	No		
	PM	24.1	C	31.1	C	7	No		
03. Friars Rd & Northside Dr	AM	17.1	B	17.4	B	0.3	No	No Feasibile Mitigation[2]	
	PM	43.4	D	64.7	E	21.3	**Yes**		
04. Mission Center Rd & Murray Ridge Rd/Phyllis Pl	AM	29.6	C	30.2	C	0.6	No		
	PM	29.5	C	47.8	D	18.3	No		
05. Mission Center Rd & Acquaterra Dr	AM	16	B	18.5	B	2.5	No		
	PM	15.7	B	17.2	B	1.5	No		
06. Mission Center Rd & Mission Valley Rd (Civitas Blvd)	AM	19	B	20.3	C	1.3	No		
	PM	22.1	C	24.8	C	2.7	No		
07. Mission Center Rd & Westside Dr (Mission Ctr. Drwy)	AM	16.6	B	17.5	B	0.9	No		
	PM	17.1	B	15.9	B	-1.2	No		
08. Mission Center Rd & Friars Rd / EB Ramps	AM	8.5	A	10.7	B	2.2	No		
	PM	12.6	B	13.2	B	0.6	No		
09. Mission Center Rd & Friars Rd / WB Ramps	AM	9.1	A	9.4	A	0.3	No		
	PM	11.3	B	13.8	B	2.5	No		
10. Mission Center Rd & Mission Center Crt	AM	13.9	B	15	B	1.1	No		
	PM	23.5	C	26	C	2.5	No		
11. Aero Dr & Sandrock Rd	AM	8.6	A	10.6	B	2	No		
	PM	7.7	A	14.6	B	6.9	No		
12. Murray Ridge Rd and Sandrock Rd	AM	17.6	B	18	B	0.4	No		
	PM	17.6	B	38.9	D	21.3	No		
13. Murray Ridge Rd and Pinecrest Ave	AM	13.8	B	15.2	B	1.4	No		
	PM	14	B	16.5	B	2.5	No		
14. Murray Ridge Rd & I-805 NB Ramp	AM	8.8	A	24	C	15.2	No	16.5[1]	B
	PM	10	A	59.4	E	49.4	**Yes**	30.4[1]	C
15. Murray Ridge Rd & I-805 SB Ramp	AM	14	B	34.8	C	20.8	No	13.4[1]	B
	PM	19.8	B	141.4	F	121.6	**Yes**	27.0[1]	C
16. Qualcomm Way & Friars Rd EB Ramp	AM	10.8	B	14.3	B	3.5	No		
	PM	10.4	B	18.1	B	7.7	No		
17. Qualcomm Way & Friars Rd WB Ramp	AM	19	B	26.1	C	7.1	No	24.2[1]	C
	PM	20.4	C	58.2	E	37.8	**Yes**	32.4[1]	C
18. Qualcomm Way & Rio San Diego Dr	AM	12.5	B	13.5	B	1	No		
	PM	21	C	29.5	C	8.5	No		
19. Rio San Diego Dr & Rio Bonito Wy	AM	14.6	B	14.5	B	-0.1	No		
	PM	15.4	B	15.6	B	0.2	No		

Intersection	Peak	Existing Conditions		NT WP Connection		Comparison		With Mitigation	
		Delay	LOS	Delay	LOS	Δ Delay	Significant?	Delay	LOS
20. Phyllis Pl & Franklin Ridge Rd	AM			10.9	B	10.9	No		
	PM			10.4	B	10.4	No		
21. Via Alta & Franklin Ridge Rd	AM			29.8	C	29.8	No		
	PM			28.1	C	28.1	No		
22. Via Alta & Civitas Boulevard	AM			18.1	B	18.1	No		
	PM			19.8	B	19.8	No		
23. Civitas Blvd & Russel Pkwy/Gill Village Dr	AM			12	B	12	No		
	PM			18.9	B	18.9	No		
24. Qualcomm Way & Civitas Blvd	AM			16.3	B	16.3	No		
	PM			16	B	16	No		

[1] See Chapter 9 for Intersection Mitigations
[2] See Chapter 9 for description of infeasibility

Table 5-3
Opening Day (2017) With Connection Freeway Mainline Conditions

Freeway Segment	AM/PM	LOS E Capacity	Existing Conditions			Near Term With Connection			Comparison	
			PHV	V/C	LOS	PHV	V/C	LOS	D V/C	Significant?
I-805 Northbound										
SR-163 to Mesa College Drive On-Ramp	AM	11,200	10,264	0.916	D	14,630	1.306	F	0.390	**Yes**
	PM	11,200	5,180	0.463	B	7,383	0.659	C	0.196	No
Mesa College Drive On-Ramp to Murray Ridge Rd	AM	11,200	11,625	1.038	F	16,188	1.445	F	0.407	**Yes**
	PM	11,200	5,866	0.524	B	8,169	0.729	C	0.205	No
Murray Ridge Rd to I-8	AM	11,200	11,834	1.057	F	15,877	1.418	F	0.361	**Yes**
	PM	13,000	5,972	0.533	B	8,013	0.715	C	0.182	No
I-805 Southbound										
SR-163 to Mesa College Drive On-Ramp	AM	11,200	4,454	0.398	A	6,348	0.567	B	0.169	No
	PM	11,200	10,177	0.909	D	14,506	1.295	F	0.386	**Yes**
Mesa College Drive On-Ramp to Murray Ridge Rd	AM	11,200	5,044	0.450	B	7,024	0.627	C	0.177	No
	PM	11,200	11,526	1.029	F	16,051	1.433	F	0.404	**Yes**
Murray Ridge Rd to I-8	AM	11,200	5,135	0.395	A	6,889	0.530	B	0.135	No
	PM	13,000	11,734	0.903	D	15,743	1.211	F	0.308	**Yes**

Peak Hour Volume = (ADT)(K)(D)/(Truck Factor))
V/C = Peak Hour Volume / Capacity
Truck Source: 2012 Annual Average Daily Truck Traffic on the California State Highway System
K/D Source: 2012 K and D Factors on the California State Highway System

Table 5-4
Opening Day (2017) With Connection Freeway Ramp Meter Conditions

Location	Meter Rate (veh/hr)	Existing Conditions				Near Term With Connection				Comparison	
		Demand (veh/hr)	Excess Demand (veh/hr)	Delay (min)	Queue (ft)	Demand (veh/hr)	Excess Demand (veh/hr)	Delay (min)	Queue (ft)	D Delay	Sign-ificant
AM Peak Hour											
Murray Ridge - I805 NB Ramp	851	299	0	0	0	838	0	0	0	0	No
Murray Ridge - I805 SB Ramp	691	309	0	0	0	560	0	0	0	0	No
Murray Ridge - I805 SB Ramp (HOV)	691	34	0	0	0	62	0	0	0	0	No
PM Peak Hour											
Murray Ridge - I805 NB Ramp	851	350	0	0	0	1,143	292	21	8,468	21	**Yes**[1]
Murray Ridge - I805 SB Ramp	691	520	0	0	0	798	107	9	3,112	9	No
Murray Ridge - I805 SB Ramp (HOV)	691	58	0	0	0	89	0	0	0	0	No

Source: Caltrans January 2015
[1] See Chapter 9 for Ramp Meter Mitigations

Figure 5-1
Opening Day With Daily Roadway Segment Volumes

Figure 5-2

Opening Day WP Project Conditions AM Peak Hour Intersection Volumes

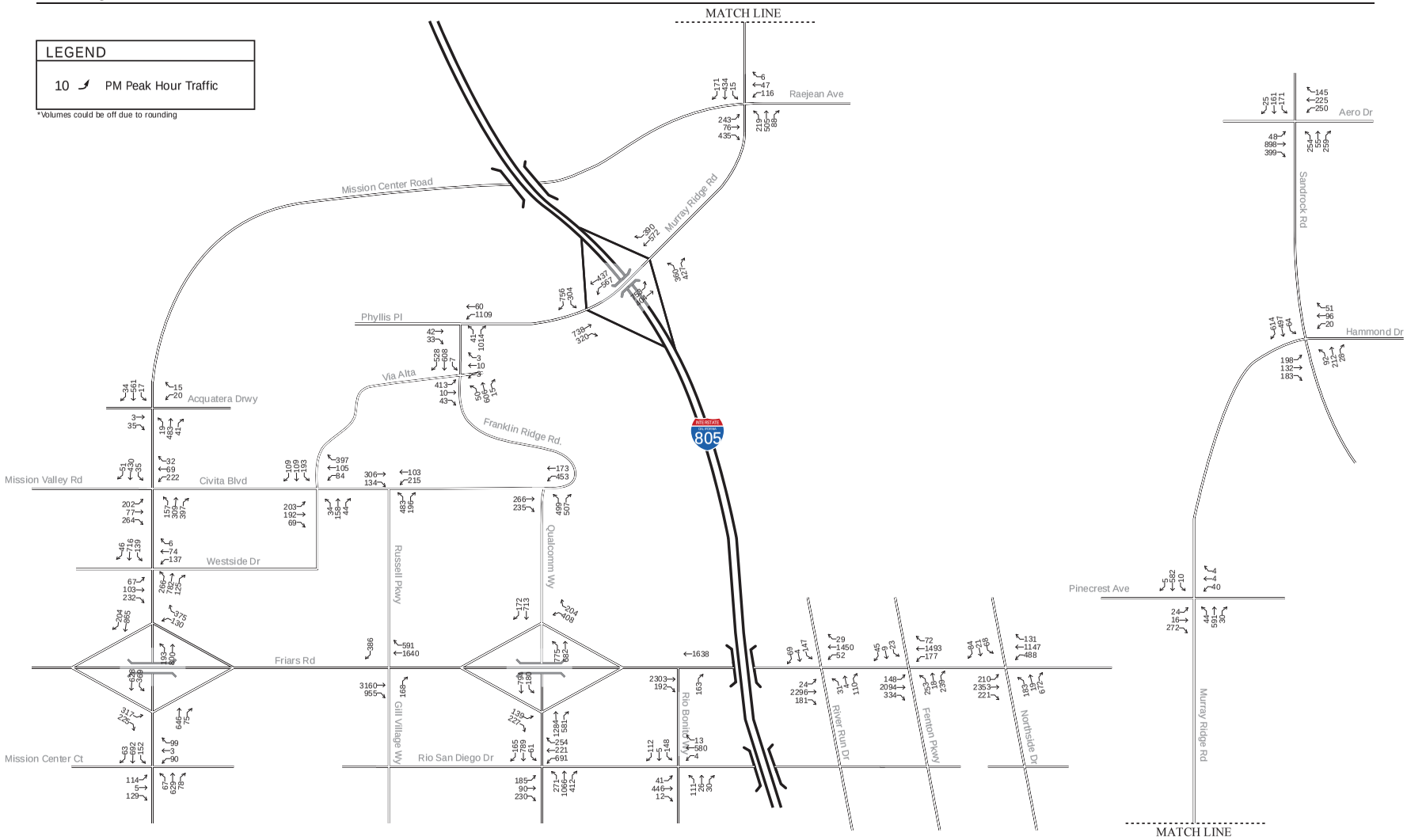

Figure 5-3
Opening Day WP Project Conditions PM Peak Hour Intersection Volumes

CHAPTER 6
LONG TERM (2035) WITHOUT CONNECTION CONDITIONS

YEAR 2035 ROADWAY NETWORK

The 2035 Long Term (2035) conditions represent the build-out condition of the Civita project. Within the study area the roadway network will not have changed from the Opening Day (2017) conditions. Regionally the SR-163 Friars Interchange improvements will have been constructed and operational as well as the Hazard Center Drive roadway extension. The primary roads within the network described in Chapters 3 and 4 are not expected to have changed and will have the same characteristics.

YEAR 2035 TRAFFIC VOLUMES

The traffic volumes used for 2035 case were derived from modeling provided by SANDAG for the with and without roadway connection scenario. A technique for developing peak conditions for intersections was applied by considering growth as was used for developing the 2017 volumes. Table 6-1 below displays the cumulative projects that are expected to be built and generating trips in the Long Term (2035) Condition.

Table 6-1
Cumulative Projects

Project Title	ADT	Status
Hazard Center Redevelopment, CPA	949 (net)	Approved, but not constructed
A-1 Storage, CPA	231	Constructed
Erma Road, CPA		Approved, but not constructed
River Park at Mission Gorge, CPA	26,736	Approved, but not constructed
Centerpoint at Grantville, CPA	7,021	Approved, but not constructed
Shawnee Master Plan, CPA	6,793	In Review

LONG TERM (2035) ANALYSIS

The developed future base volumes were used to analyze the Long Term (2035) baseline conditions. The resultant Long Term (2035) daily, weekday morning and evening peak hour intersection volumes are shown in Figures 6-1 through 6-3.

LONG TERM (2035) WITHOUT CONNECTION ANALYSIS

Roadway Segment Conditions

The Long Term (2035) without connection roadway segment analysis is summarized in Table 6-2. As shown in Table 6-2, all roadway segments in the study area are calculated to operate at an acceptable LOS

D or better based on City of San Diego's guidelines, except for the following:

- Mission Center Road from Acquatera Drive to Murray Ridge Road – **LOS F**
- Murray Ridge Road from I-805 NB Ramp to Mission Center Road – **LOS F**
- Murray Ridge Road from Mission Center Road to Pinecrest Avenue – **LOS F**
- Murray Ridge Road from Pinecrest Avenue to Sandrock Road – **LOS F**
- Phyllis Place from I-805 SB Ramp to I-805 NB Ramp – **LOS E**
- Rio San Diego Drive from Qualcomm Way to Rio Bonito Way – **LOS E**

Intersection Conditions

The Long Term (2035) without connection intersection analysis is summarized in Table 6-3. As shown in Table 6-3, all intersections in the study area are calculated to operate at an acceptable LOS D or better based on City of San Diego's guidelines, except for the following:

- Friars Road / Northside Drive – **LOS E (PM)**
- Mission Center Road / Murray Ridge Road – **LOS E (AM)**
- Mission Center Road / Murray Ridge Road – **LOS F (PM)**
- Qualcomm Way / Friars Road WB Ramp – **LOS F (PM)**
- Qualcomm Way / Friars Road EB Ramp – **LOS E (PM)**
- Murray Ridge Road / I-805 SB Ramp – **LOS F (PM)**
- Qualcomm Way / Rio San Diego Drive – **LOS F (PM)**

Freeway Mainline Conditions

The Long Term (2035) without connection freeway analysis is summarized in Table 6-5. As shown in Table 6-5, the following freeway segments would not operate at LOS D or better:

- I-805 N from I-8 to SR-163 – **LOS F (AM)**
- I-805 S from SR-163 to I-8 – **LOS F (PM)**

Freeway Ramp Meter Conditions

Ramp meter analysis was conducted at I-805 SB Ramp at Murray Ridge Road. Ramp meter rates were provided by Caltrans. Maximum delay method is based on the most restrictive ramp meter rate. Table 6-6 presents the results using the maximum delay method.

As shown in Table 6-6, under Long Term (2035) without connection conditions, all ramps are calculated to operate with less than 15 minutes of delay.

Appendix I includes Long Term (2035) without connection peak hour intersection and arterial analysis worksheets.

Table 6-2
Long Term (2035) Without Connection Daily Roadway Segment Conditions

Roadway Segment	Lanes/ Class	LOS E Capacity	Existing Conditions			Δ ADT	LT WO Connection			Comparison	
			ADT	V/C	LOS		ADT	V/C	LOS	D V/C	Significant?
Civitas Boulevard											
Mission Center Road to Via Alta	4M	40,000				19,181	19,181	0.480	B		
Via Alta to Russel Parkway	4M	40,000				17,523	17,523	0.438	B		
Russel Parkway to Qualcomm Way	4M	40,000				24,859	24,859	0.621	C		
Qualcomm Way to Franklin Ridge Road	4M	40,000				11,913	11,913	0.298	A		
Franklin Ridge Road											
Via Alta to Civitas Boulevard	2M	16,667				10,457	10,457	0.627	C		
Friars Road											
Mission Center Road to Qualcomm Way	6E	80,000	33,219	0.415	B	16,938	50,157	0.627	C	0.212	No
Qualcomm Way to Rio Bonito Way	6E	80,000	36,466	0.456	B	9,741	46,207	0.578	C	0.122	No
Rio Bonito Way to Northside Drive	6P	60,000	34,886	0.581	B	7,669	42,555	0.709	C	0.128	No
Mission Center Road											
Hazard Center Drive to Friars Road	4M	40,000	20,827	0.521	B	13,081	33,908	0.848	D	0.327	No
Friars Road to Mission Center Driveway (Creekside Park Lane)	5M	45,000	22,759	0.506	B	11,793	34,552	0.768	C	0.262	No
Mission Center Driveway (Creekside Park Lane) to Mission Valley Road	5M	45,000	20,013	0.445	B	4,074	24,087	0.535	B	0.091	No
Mission Valley Road to Acquatera Drive	4M	40,000	9,035	0.226	A	14,815	23,850	0.596	C	0.370	No
Acquatera Drive to Murray Ridge Road	2C NF	10,000	9,035	0.904	E	14,815	23,850	2.385	F	1.482	**Yes**
Murray Ridge Road											
I-805 NB Ramp to Mission Center Road	2C CL	15,000	17,441	1.163	F	13,737	31,178	2.079	F	0.916	**Yes**
Mission Center Road to Pinecrest Avenue	2C CL	15,000	14,074	0.938	E	9,076	23,150	1.543	F	0.605	**Yes**
Pinecrest Avenue to Sandrock Road	2C CL	15,000	9,502	0.633	C	8,052	17,554	1.170	F	0.537	**Yes**
Phyllis Place											
Abbotshill Road to I-805 SB Ramp	2C NF	10,000	2,420	0.242	A	0	2,420	0.242	A	0.000	No
I-805 SB Ramp to I-805 NB Ramp	2C CL	15,000	10,770	0.718	D	3,800	14,570	0.971	E	0.253	**Yes**

Roadway Segment	Lanes/ Class	LOS E Capacity	Existing Conditions			Δ ADT	LT WO Connection			Comparison	
			ADT	V/C	LOS		ADT	V/C	LOS	D V/C	Significant?
Qualcomm Way											
Civitas Boulevard to Friars Road WB Ramp	6M	50,000	1,858	0.037	A	25,145	27,003	0.540	B	0.503	No
Friars Road WB Ramp to Friars Road EB Ramp	6M	50,000	9,367	0.187	A	12,722	22,089	0.442	B	0.254	No
Friars Road EB Ramp to Rio San Diego Drive	6M	50,000	14,050	0.281	A	6,387	20,437	0.409	B	0.128	No
Rio San Diego Drive											
Qualcomm Way to Rio Bonito Way	4C	30,000	18,420	0.614	C	8,662	27,082	0.903	E	0.289	**Yes**
Russell Park Way											
Civitas Boulevard to Friars Road	2M	16,667				11,900	11,900	0.714	C		
Sandrock Road											
Murray Ridge Road to Aero Drive	2C CL	15,000	10,686	0.712	D	1,368	12,054	0.804	D	0.091	No
Westside Drive											
Mission Center Road to Via Alta	2C CL	15,000				8,334	8,334	0.556	C		
Via Alta											
Franklin Ridge Road to Civitas Boulevard	2M	16,667				3,647	3,647	0.219	A		
Civitas Boulevard to Westside Drive	2M	16,667				3,356	3,356	0.201	A		

Abbreviations: 2C CL: 2 lane Collector with a continuous left-turn lane. 2C NF: 2 lane collector with no fronting property. 4M: 4 lane Major Street. 6E: 6 lane Expressway. 6M: 6 lane Major. 6P: 6 lane Prime Arterial.

Table 6-3
Long Term (2035) Without Connection Intersection Conditions

Intersection	Peak	Existing Conditions		LT WO Connection		Comparison	
		Delay	LOS	Delay	LOS	Δ Delay	Significant?
01. Friars Rd & River Run Rd	AM	10.8	B	13	B	2.2	No
	PM	14.6	B	20.1	C	5.5	No
02. Friars Rd & Fenton Pkwy	AM	20.8	C	21.5	C	0.7	No
	PM	24.1	C	32.5	C	8.4	No
03. Friars Rd & Northside Dr	AM	17.1	B	18	B	0.9	No
	PM	43.4	D	59.4	E	16	**Yes**
04. Mission Center Rd & Murray Ridge Rd/Phyllis Pl	AM	29.6	C	57.2	E	27.6	**Yes**
	PM	29.5	C	171.4	F	141.9	**Yes**
05. Mission Center Rd & Acquaterra Dr	AM	16	B	15.8	B	-0.2	No
	PM	15.7	B	15	B	-0.7	No
06. Mission Center Rd & Mission Valley Rd (Civitas Blvd)	AM	19	B	27.2	C	8.2	No
	PM	22.1	C	54.8	D	32.7	No
07. Mission Center Rd & Westside Dr (Mission Ctr. Drwy)	AM	16.6	B	16.2	B	-0.4	No
	PM	17.1	B	25.9	C	8.8	No
08. Mission Center Rd & Friars Rd / EB Ramps	AM	8.5	A	13.8	B	5.3	No
	PM	12.6	B	22.1	C	9.5	No
09. Mission Center Rd & Friars Rd / WB Ramps	AM	9.1	A	12.8	B	3.7	No
	PM	11.3	B	30.4	C	19.1	No
10. Mission Center Rd & Mission Center Crt	AM	13.9	B	20.6	C	6.7	No
	PM	23.5	C	46.3	D	22.8	No
11. Aero Dr & Sandrock Rd	AM	8.6	A	12.6	B	4	No
	PM	7.7	A	27.7	C	20	No
12. Murray Ridge Rd and Sandrock Rd	AM	17.6	B	19.2	B	1.6	No
	PM	17.6	B	48.7	D	31.1	No
13. Murray Ridge Rd and Pinecrest Ave	AM	13.8	B	14	B	0.2	No
	PM	14	B	13.5	B	-0.5	No
14. Murray Ridge Rd & I-805 NB Ramp	AM	8.8	A	13.1	B	4.3	No
	PM	10	A	37	D	27	No
15. Murray Ridge Rd & I-805 SB Ramp	AM	14	B	26.8	C	12.8	No
	PM	19.8	B	74.4	E	54.6	**Yes**
16. Qualcomm Way & Friars Rd EB Ramp	AM	10.8	B	24.6	C	13.8	No
	PM	10.4	B	68.5	E	58.1	**Yes**
17. Qualcomm Way & Friars Rd WB Ramp	AM	19	B	26.5	C	7.5	No
	PM	20.4	C	90.3	F	69.9	**Yes**
18. Qualcomm Way & Rio San Diego Dr	AM	12.5	B	17.7	B	5.2	No
	PM	21	C	80.5	F	59.5	**Yes**
19. Rio San Diego Dr & Rio Bonito Wy	AM	14.6	B	14.6	B	0	No
	PM	15.4	B	16.1	B	0.7	No

Intersection	Peak	Existing Conditions		LT WO Connection		Comparison	
		Delay	LOS	Delay	LOS	Δ Delay	Significant?
20. Phyllis Pl & Franklin Ridge Rd	AM						
	PM						
21. Via Alta & Franklin Ridge Rd	AM			37.6	D	37.6	No
	PM			19.3	B	19.3	No
22. Via Alta & Civitas Boulevard	AM			17	B	17	No
	PM			18.3	B	18.3	No
23. Civitas Blvd & Russel Pkwy/Gill Village Dr	AM			9.4	A	9.4	No
	PM			28.8	C	28.8	No
24. Qualcomm Way & Civitas Blvd	AM			19.1	B	19.1	No
	PM			23.1	C	23.1	No

Table 6-4
Long Term (2035) Without Connection Freeway Mainline Conditions

Freeway Segment	AM/PM	LOS E Capacity	Existing Conditions			Long Term Without Connection			Comparison	
			PHV	V/C	LOS	PHV	V/C	LOS	Δ V/C	Significant?
I-805 Northbound										
SR-163 to Mesa College Drive On-Ramp	AM	11,200	10,264	0.916	D	16,323	1.256	F	0.340	**Yes**
	PM	11,200	5,180	0.463	B	8,237	0.634	C	0.171	No
Mesa College Drive On-Ramp to Murray Ridge Rd	AM	11,200	11,625	1.038	F	18,019	1.386	F	0.348	**Yes**
	PM	11,200	5,866	0.524	B	9,094	0.700	C	0.176	No
Murray Ridge Rd to I-8	AM	11,200	11,834	1.057	F	18,047	1.388	F	0.331	**Yes**
	PM	13,000	5,972	0.533	B	9,108	0.701	C	0.168	No
I-805 Southbound										
SR-163 to Mesa College Drive On-Ramp	AM	11,200	4,454	0.398	A	7,082	0.545	B	0.147	No
	PM	11,200	10,177	0.909	D	16,184	1.245	F	0.336	**Yes**
Mesa College Drive On-Ramp to Murray Ridge Rd	AM	11,200	5,044	0.450	B	7,818	0.601	B	0.151	No
	PM	11,200	11,526	1.029	F	17,866	1.374	F	0.345	**Yes**
Murray Ridge Rd to I-8	AM	11,200	5,135	0.395	A	7,831	0.529	B	0.134	No
	PM	13,000	11,734	0.903	D	17,894	1.209	F	0.306	**Yes**

Peak Hour Volume = (ADT)(K)(D)/(Truck Factor))

V/C = Peak Hour Volume / Capacity

Truck Source: 2012 Annual Average Daily Truck Traffic on the California State Highway System

K/D Source: 2012 K and D Factors on the California State Highway System

Table 6-5
Long Term (2035) Without Connection Freeway Ramp Meter Conditions

Location	Meter Rate (veh/hr)	Existing Conditions				LT WO Connection				Comparison	
		Demand (veh/hr)	Excess Demand (veh/hr)	Delay (min)	Queue (ft)	Demand (veh/hr)	Excess Demand (veh/hr)	Delay (min)	Queue (ft)	Δ Delay	Sign-ificant
AM Peak Hour											
Murray Ridge - I805 NB Ramp	851	299	0	0	0	410	0	0	0	0	No
Murray Ridge - I805 SB Ramp	691	309	0	0	0	464	0	0	0	0	No
Murray Ridge - I805 SB Ramp (HOV)	691	34	0	0	0	52	0	0	0	0	No
PM Peak Hour											
Murray Ridge - I805 NB Ramp	851	350	0	0	0	780	0	0	0	0	No
Murray Ridge - I805 SB Ramp	691	520	0	0	0	774	83	7	2,407	7	No
Murray Ridge - I805 SB Ramp (HOV)	691	58	0	0	0	86	0	0	0	0	No

Source: Caltrans January 2015

Figure 6-1
Long Term Without Daily Roadway Segment Volumes

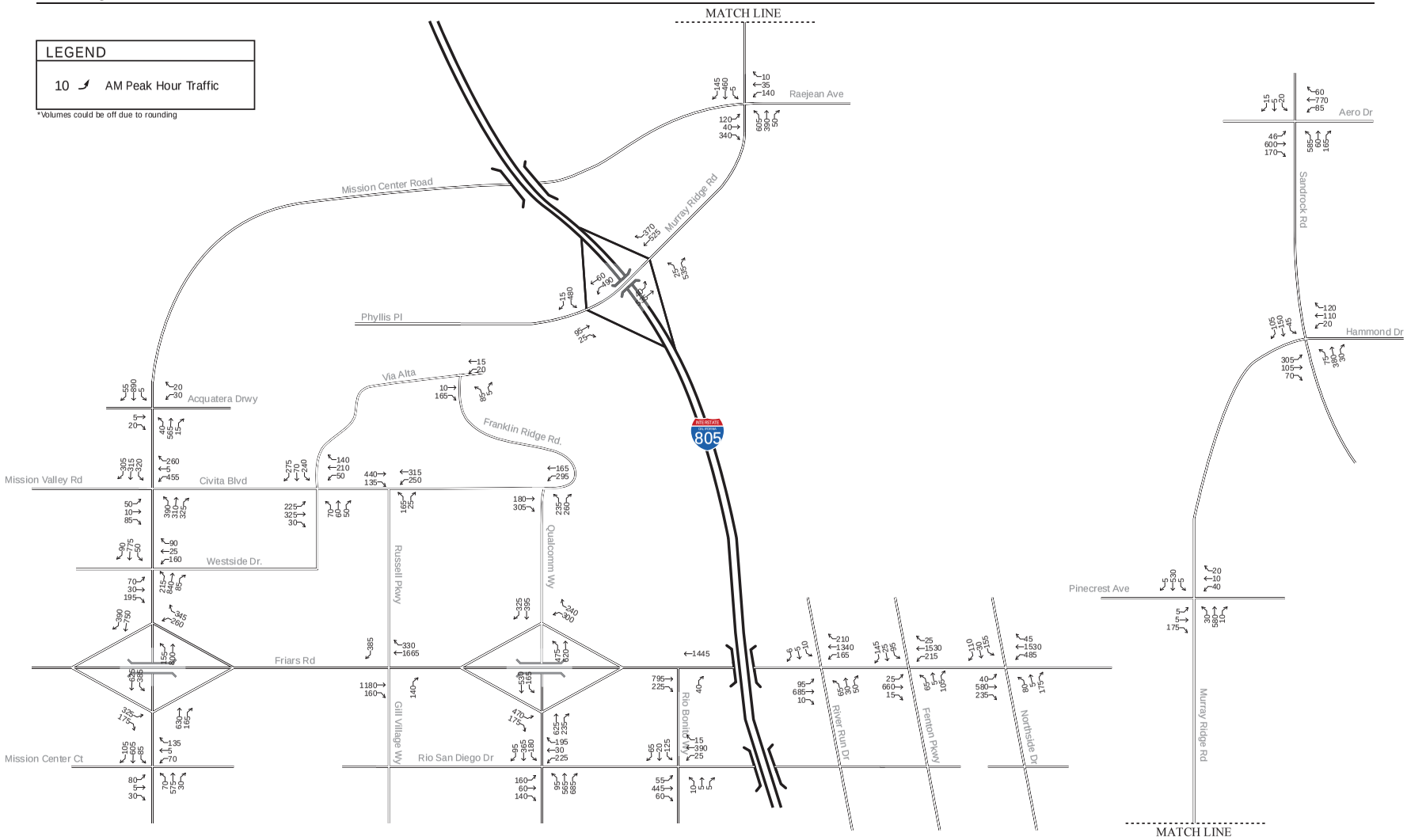

Figure 6-2
Long Term Without AM Peak Hour Intersection Volumes

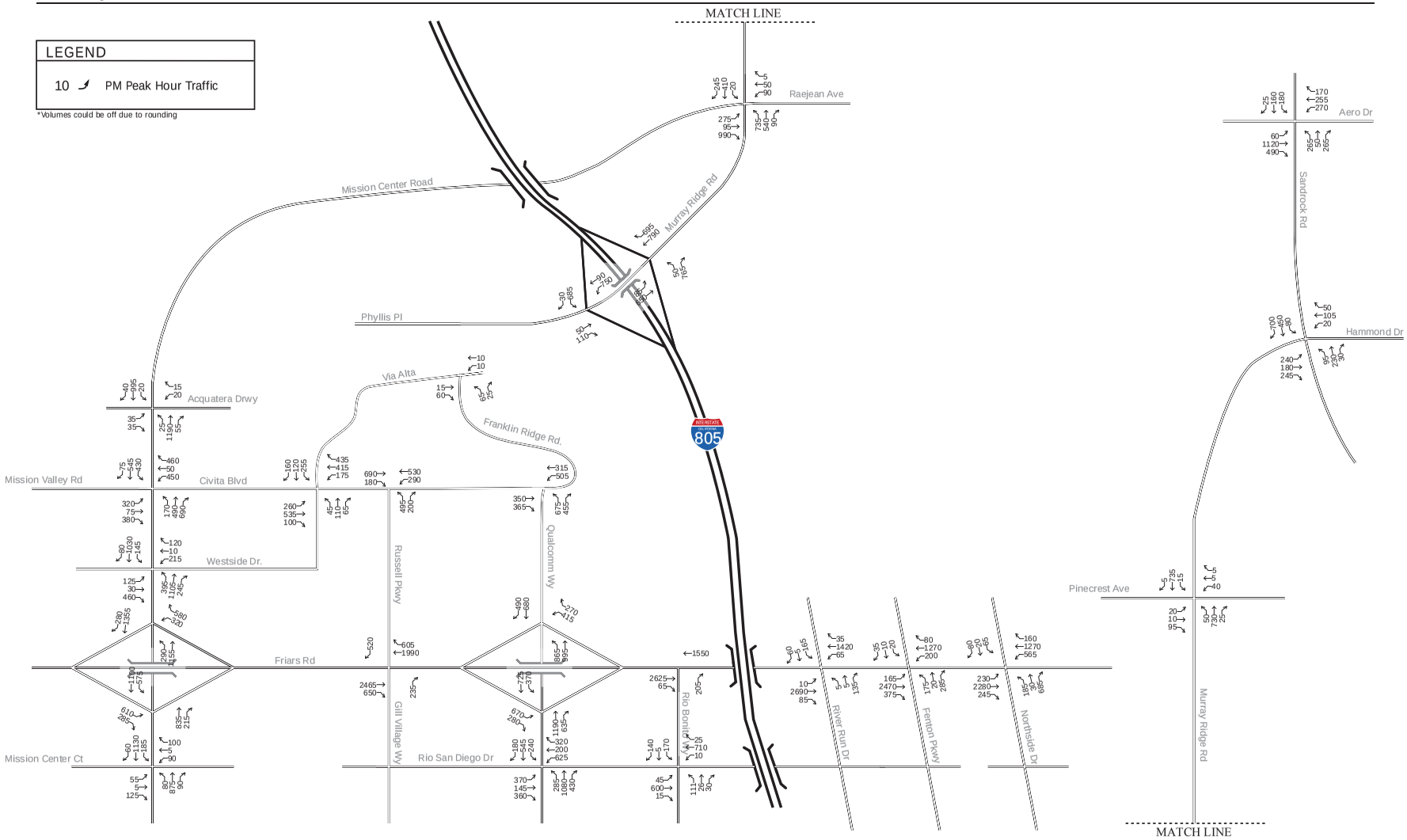

Figure 6-3
Long Term Without PM Peak Hour Intersection Volumes

CHAPTER 7
LONG TERM (2035) WITH CONNECTION CONDITIONS

ROADWAY NETWORK

The Long Term (2035) with connection conditions represents Long Term (2035) conditions of the study area with the proposed Franklin Ridge Road connection. With the exception of the addition of the Franklin Ridge Road connection, there are no other roadway network condition changes from what is described in Chapter 6.

LONG TERM (2035) WITH CONNECTION ANALYSIS

Roadway Segment Conditions

The Long Term (2035) with connection roadway segment analysis is summarized in Table 7-1. As shown in Table 7-1, all roadway segments in the study area are calculated to operate at an acceptable LOS D or better based on City of San Diego's guidelines, except for the following:

- Franklin Ridge Road from Via Alta to Civita Boulevard – **LOS F**
- Mission Center Road from Acquatera Drive to Murray Ridge Road – **LOS F**
- Phyllis Place from Franklin Ridge Road to I-805 SB Ramp – **LOS F**
- Phyllis Place from I-805 SB Ramp to I-805 NB Ramp – **LOS F**
- Murray Ridge Road from I-805 NB Ramp to Mission Center Road – **LOS F**
- Murray Ridge Road from Mission Center Road to Pinecrest Avenue – **LOS F**
- Murray Ridge Road from Pinecrest Avenue to Sandrock Road – **LOS F**
- Rio San Diego Drive from Qualcomm Way to Rio Bonito Way – **LOS F**

Intersection Conditions

The Long Term (2035) with connection intersection analysis is summarized in Table 7-2. As shown in Table 7-2, all intersections in the study area are calculated to operate at an acceptable LOS D or better based on City of San Diego's guidelines, except for the following:

- Friars Road / Northside Drive – **LOS E (PM)**
- Qualcomm Way / Friars Road WB Ramp – **LOS E (PM)**
- Qualcomm Way / Friars Road EB Ramp – **LOS E (PM)**
- Murray Ridge Road / I-805 NB Ramp – **LOS F (PM)**
- Murray Ridge Road / I-805 SB Ramp – **LOS E (AM)**
- Murray Ridge Road / I-805 SB Ramp – **LOS F (PM)**
- Murray Ridge Road / Sandrock Road – **LOS E (PM)**
- Qualcomm Way / Rio San Diego Drive – **LOS F (PM)**
- Franklin Ridge Road / Phyllis Place – **LOS F (PM)**
- Franklin Ridge Road / Via Alta – **LOS F (AM/PM)**

Freeway Mainline Conditions

The Long Term (2035) with connection freeway analysis is summarized in Table 7-4. As shown in Table 7-4, currently, the following freeway segment does not operate AT LOS D or better:

- I-805 N from I-8 to SR-163 – **LOS F (AM)**
- I-805 S from SR-163 to I-8 – **LOS F (PM)**

Freeway Ramp Meter Conditions

Ramp meter analysis was conducted at I-805 SB Ramp at Murray Ridge Road. Ramp meter rates were provided by Caltrans. Maximum delay method is based on the most restrictive ramp meter rate. Table 7–5 presents the results using the maximum delay method.

As shown in Table 7–5, under Long Term (2035) without connection conditions, all ramps are calculated to operate with less than 15 minutes of delay except:

- I-805 NB Ramp at Murray Ridge Road – **43 min. of delay (PM)**
- I-805 SB Ramp at Murray Ridge Road – **31 min. of delay** (**PM)**

Appendix J includes Long Term (2035) with connection peak hour intersection and arterial analysis worksheets. Appendix K includes Long Term (2017) with connection and mitigation peak hour instersection worksheets.

Table 7-1
Long Term (2035) With Connection Daily Roadway Segment Condition

Roadway Segment	Lanes/ Class	LOS E Capacity	Existing Conditions			Δ ADT	LT WP Connection			Comparison		With Mitigation		
			ADT	V/C	LOS		ADT	V/C	LOS	Δ V/C	Significant?	New Lanes / Config.	New LOS E Cap.	New LOS
Civitas Boulevard														
Mission Center Road to Via Alta	4M	40,000				11,368	11,368	0.284	A					
Via Alta to Russel Parkway	4M	40,000				12,672	12,672	0.317	A					
Russel Parkway to Qualcomm Way	4M	40,000				20,008	20,008	0.500	B					
Qualcomm Way to Franklin Ridge Road	4M	40,000				21,375	21,375	0.534	C					
Franklin Ridge Road														
Via Alta to Civitas Boulevard	2M	16,667				20,919	20,919	1.255	F					
Phyllis Place to Via Alta	4M	40,000				34,117	34,117	0.853	D					
Friars Road														
Mission Center Road to Qualcomm Way	6E	80,000	33,219	0.415	B	10,803	44,022	0.550	C	0.135	No			
Qualcomm Way to Rio Bonito Way	6E	80,000	36,466	0.456	B	11,865	48,331	0.604	C	0.148	No			
Rio Bonito Way to Northside Drive	6P	60,000	34,886	0.581	B	9,417	44,303	0.738	C	0.157	No			
Mission Center Road														
Hazard Center Drive to Friars Road	4M	40,000	20,827	0.521	B	11,764	32,591	0.815	D	0.294	No			
Friars Road to Mission Center Driveway (Creekside Park Lane)	5M	45,000	22,759	0.506	B	6,634	29,393	0.653	C	0.147	No			
Mission Center Driveway (Creekside Park Lane) to Mission Valley Road	5M	45,000	20,013	0.445	B	-1,077	18,936	0.421	B	-0.024	No			
Mission Valley Road to Acquatera Drive	4M	40,000	9,035	0.226	A	4,029	13,064	0.327	A	0.101	No			
Acquatera Drive to Murray Ridge Road	2C NF	10,000	9,035	0.904	E	4,029	13,064	1.306	F	0.403	**Yes**	2C CL[1]	15,000	E
Murray Ridge Road														
I-805 NB Ramp to Mission Center Road	2C CL	15,000	17,441	1.163	F	5,629	23,070	1.538	F	0.375	**Yes**	4C[1]	30,000	E
Mission Center Road to Pinecrest Avenue	2C CL	15,000	14,074	0.938	E	10,271	24,345	1.623	F	0.685	**Yes**	4C[1]	30,000	D
Pinecrest Avenue to Sandrock Road	2C CL	15,000	9,502	0.633	C	8,843	18,345	1.223	F	0.590	**Yes**	4C[1]	30,000	C

Roadway Segment	Lanes/ Class	LOS E Capacity	Existing Conditions			Δ ADT	LT WP Connection			Comparison		With Mitigation		
			ADT	V/C	LOS		ADT	V/C	LOS	Δ V/C	Significant?	New Lanes / Config.	New LOS E Cap.	New LOS
Phyllis Place														
Abbotshill Road to Franklin Ridge Road	2C NF	10,000	2,420	0.242	A	0	2,420	0.242	A	0.000	No			
Franklin Ridge Road to I-805 SB Ramp	2C NF	10,000	2,420	0.242	A	32,120	34,540	3.454	F	3.212	**Yes**	4C[1]	30,000	F
I-805 SB Ramp to I-805 NB Ramp	2C CL	15,000	10,770	0.718	D	13,267	24,037	1.602	F	0.884	**Yes**	4C[1]	30,000	D
Qualcomm Way														
Civitas Boulevard to Friars Road WB Ramp	6M	50,000	1,858	0.037	A	27,097	28,955	0.579	C	0.542	No			
Friars Road WB Ramp to Friars Road EB Ramp	6M	50,000	9,367	0.187	A	15,329	24,696	0.494	B	0.307	No			
Friars Road EB Ramp to Rio San Diego Drive	6M	50,000	14,050	0.281	A	9,224	23,274	0.465	B	0.184	No			
Rio San Diego Drive														
Qualcomm Way to Rio Bonito Way	4C	30,000	18,420	0.614	C	9,613	28,033	0.934	E	0.320	**Yes**	4M[1]	40,000	C
Russell Park Way														
Civitas Boulevard to Friars Road	2M	16,667				11,400	11,400	0.684	C					
Sandrock Road														
Murray Ridge Road to Aero Drive	2C CL	15,000	10,686	0.712	D	1,886	12,572	0.838	D	0.126	No			
Westside Drive														
Mission Center Road to Via Alta	2C CL	15,000				10,628	10,628	0.709	D					
Via Alta														
Franklin Ridge Road to Civitas Boulevard	2M	16,667				11,686	11,686	0.701	C					
Civitas Boulevard to Westside Drive	2M	16,667				5,650	5,650	0.339	A					

Abbreviations: 2C CL: 2 lane Collector with a continuous left-turn lane. 2C NF: 2 lane collector with no fronting property. 4M: 4 lane Major Street. 6E: 6 lane Expressway. 6M: 6 lane Major. 6P: 6 lane Prime Arterial.

[1] See Chapter 9 for Segment Mitigations

Table 7-2
Long Term (2035) With Connection Intersection Conditions

Intersection	Peak	Existing Conditions		LT WP Connection		Comparison		With Mitigation	
		Delay	LOS	Delay	LOS	Δ Delay	Significant ?	Δ Delay	LOS
01. Friars Rd & River Run Rd	AM	10.8	B	13.6	B	2.8	No		
	PM	14.6	B	22.6	C	8	No		
02. Friars Rd & Fenton Pkwy	AM	20.8	C	21.9	C	1.1	No		
	PM	24.1	C	33.7	C	9.6	No		
03. Friars Rd & Northside Dr	AM	17.1	B	18	B	0.9	No		
	PM	43.4	D	59.4	E	16	**Yes**	No Feasibile Mitigation[2]	
04. Mission Center Rd & Murray Ridge Rd/Phyllis Pl	AM	29.6	C	34.2	C	4.6	No		
	PM	29.5	C	42.3	D	12.8	No		
05. Mission Center Rd & Acquaterra Dr	AM	16	B	17	B	1	No		
	PM	15.7	B	15.4	B	-0.3	No		
06. Mission Center Rd & Mission Valley Rd (Civitas Blvd)	AM	19	B	23.2	C	4.2	No		
	PM	22.1	C	28.1	C	6	No		
07. Mission Center Rd & Westside Dr (Mission Ctr. Drwy)	AM	16.6	B	17.9	B	1.3	No		
	PM	17.1	B	20.5	C	3.4	No		
08. Mission Center Rd & Friars Rd / EB Ramps	AM	8.5	A	11.9	B	3.4	No		
	PM	12.6	B	18.9	B	6.3	No		
09. Mission Center Rd & Friars Rd / WB Ramps	AM	9.1	A	10.6	B	1.5	No		
	PM	11.3	B	23.2	C	11.9	No		
10. Mission Center Rd & Mission Center Crt	AM	13.9	B	20.4	C	6.5	No		
	PM	23.5	C	45.9	D	22.4	No		
11. Aero Dr & Sandrock Rd	AM	8.6	A	12.6	B	4	No		
	PM	7.7	A	31.9	C	24.2	No		
12. Murray Ridge Rd and Sandrock Rd	AM	17.6	B	19.7	B	2.1	No	22.8[1]	C
	PM	17.6	B	58.4	E	40.8	**Yes**	24.5[1]	C
13. Murray Ridge Rd and Pinecrest Ave	AM	13.8	B	14	B	0.2	No		
	PM	14	B	13.2	B	-0.8	No		
14. Murray Ridge Rd & I-805 NB Ramp	AM	8.8	A	33.6	C	24.8	No	20.5[1]	C
	PM	10	A	148.8	F	138.8	**Yes**	56.0[1]	E
15. Murray Ridge Rd & I-805 SB Ramp	AM	14	B	79.9	E	65.9	**Yes**	21[1]	C
	PM	19.8	B	404	F	384.2	**Yes**	112.5[1]	F
16. Qualcomm Way & Friars Rd EB Ramp	AM	10.8	B	22	C	11.2	No	17.6[1]	B
	PM	10.4	B	60.8	E	50.4	**Yes**	48.8[1]	D
17. Qualcomm Way & Friars Rd WB Ramp	AM	19	B	27.4	C	8.4	No	22.4[1]	C
	PM	20.4	C	77.1	E	56.7	**Yes**	40.5[1]	D
18. Qualcomm Way & Rio San Diego Dr	AM	12.5	B	21.6	C	9.1	No	15.7[1]	B
	PM	21	C	106	F	85	**Yes**	55.8[1]	E
19. Rio San Diego Dr & Rio Bonito Wy	AM	14.6	B	15.5	B	0.9	No		
	PM	15.4	B	17.1	B	1.7	No		

Intersection	Peak	Without Connection		With Connection		Comparison		With Mitigation	
		Delay	LOS	Delay	LOS	Δ Delay	Significant ?	Δ Delay	LOS
20. Phyllis Pl & Franklin Ridge Rd	AM			10	A	10	No		
	PM			18.9	B	18.9	No		
21. Via Alta & Franklin Ridge Rd	AM			44.3	D	44.3	No	39.8[1]	D
	PM			96.2	F	96.2	**Yes**	54.6[1]	D
22. Via Alta & Civitas Boulevard	AM			18.4	B	18.4	No		
	PM			25.9	C	25.9	No		
23. Civitas Blvd & Russel Pkwy/Gill Village Dr	AM			11.2	B	11.2	No		
	PM			21.3	C	21.3	No		
24. Qualcomm Way & Civitas Blvd	AM			16.4	B	16.4	No		
	PM			21.3	C	21.3	No		

[1] See Chapter 9 for Intersection Mitigations
[2] See Chapter 9 for description of infeasibility

Table 7-3
Long Term (2035) With Connection Freeway Mainline Conditions

Freeway Segment	AM/PM	LOS E Capacity	Existing Conditions			Long Term With Connection			Comparison	
			PHV	V/C	LOS	PHV	V/C	LOS	Δ V/C	Significant?
I-805 Northbound										
SR-163 to Mesa College Drive On-Ramp	AM	11,200	10,264	0.916	D	16,755	1.289	F	0.373	**Yes**
	PM	11,200	5,180	0.463	B	8,455	0.650	C	0.187	No
Mesa College Drive On-Ramp to Murray Ridge Rd	AM	11,200	11,625	1.038	F	18,515	1.424	F	0.386	**Yes**
	PM	11,200	5,866	0.524	B	9,344	0.719	C	0.195	No
Murray Ridge Rd to I-8	AM	11,200	11,834	1.057	F	18,124	1.394	F	0.337	**Yes**
	PM	13,000	5,972	0.533	B	9,147	0.704	C	0.171	No
I-805 Southbound										
SR-163 to Mesa College Drive On-Ramp	AM	11,200	4,454	0.398	A	7,270	0.559	B	0.161	No
	PM	11,200	10,177	0.909	D	16,612	1.278	F	0.369	**Yes**
Mesa College Drive On-Ramp to Murray Ridge Rd	AM	11,200	5,044	0.450	B	8,034	0.618	B	0.168	No
	PM	11,200	11,526	1.029	F	18,358	1.412	F	0.383	**Yes**
Murray Ridge Rd to I-8	AM	11,200	5,135	0.395	A	7,864	0.531	B	0.136	No
	PM	13,000	11,734	0.903	D	17,971	1.214	F	0.311	**Yes**

Peak Hour Volume = (ADT)(K)(D)/(Truck Factor))
V/C = Peak Hour Volume / Capacity
Truck Source: 2012 Annual Average Daily Truck Traffic on the California State Highway System
K/D Source: 2012 K and D Factors on the California State Highway System

Table 7-4
Long Term (2035) With Connection Freeway Ramp Meter Conditions

Location	Meter Rate (veh/hr)	Existing Conditions				LT WP Connection				Comparison	
		Demand (veh/hr)	Excess Demand (veh/hr)	Delay (min)	Queue (ft)	Demand (veh/hr)	Excess Demand (veh/hr)	Delay (min)	Queue (ft)	Δ Delay	Sign-ificant
AM Peak Hour											
Murray Ridge - I805 NB Ramp	851	299	0	0	0	985	134	9	3,886	9	No
Murray Ridge - I805 SB Ramp	691	309	0	0	0	671	0	0	0	0	No
Murray Ridge - I805 SB Ramp (HOV)	691	34	0	0	0	75	0	0	0	0	No
PM Peak Hour											
Murray Ridge - I805 NB Ramp	851	350	0	0	0	1,455	604	43	17,516	43	**Yes**[1]
Murray Ridge - I805 SB Ramp	691	520	0	0	0	1,049	358	31	10,368	31	**Yes**[1]
Murray Ridge - I805 SB Ramp (HOV)	691	58	0	0	0	117	0	0	0	0	No

Source: Caltrans January 2015

[1] See Chapter 9 for Ramp Meter Mitigations

Figure 7-1
Long Term With Daily Roadway Segment Volumes

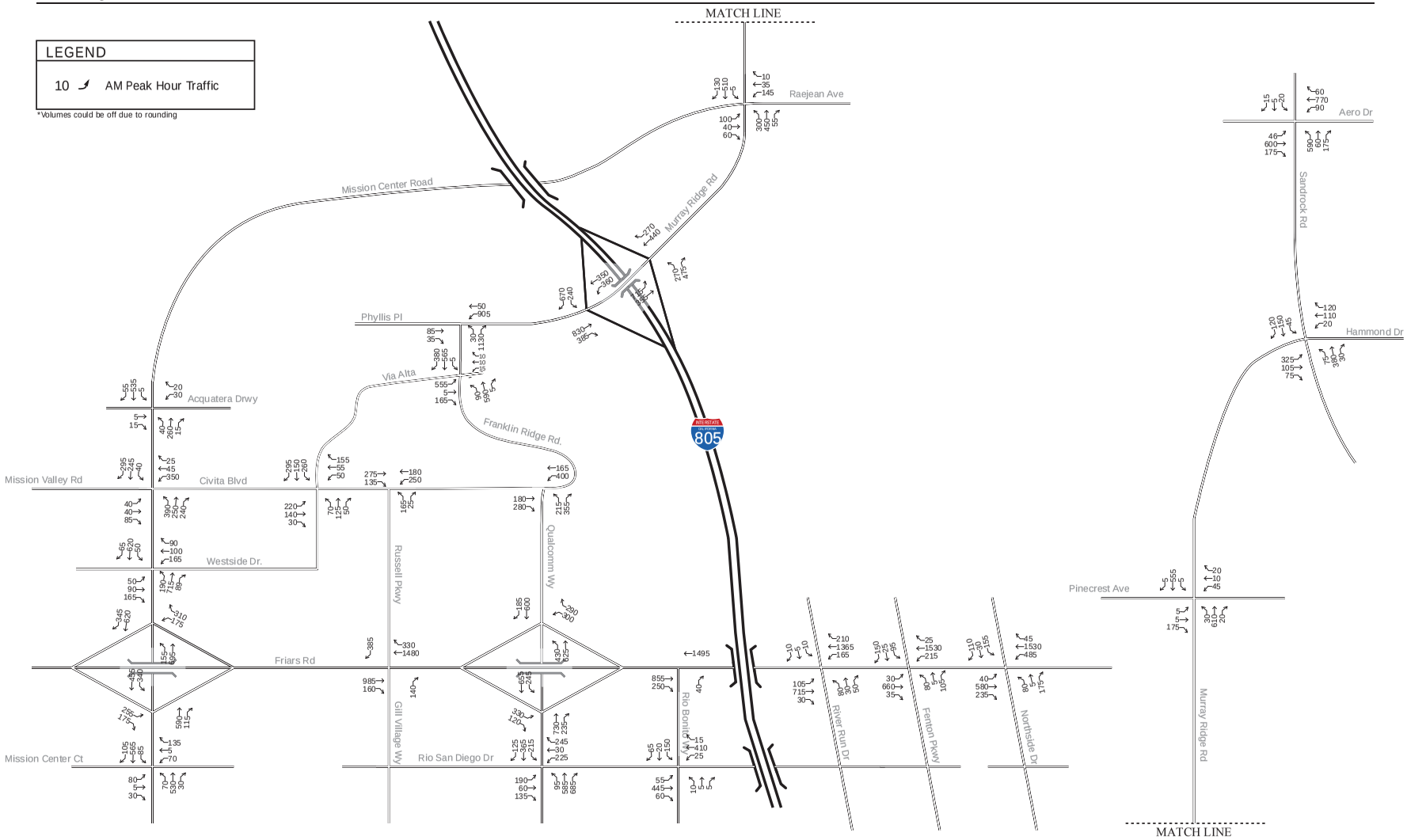

Figure 7-2
Long Term With AM Peak Hour Intersection Volumes

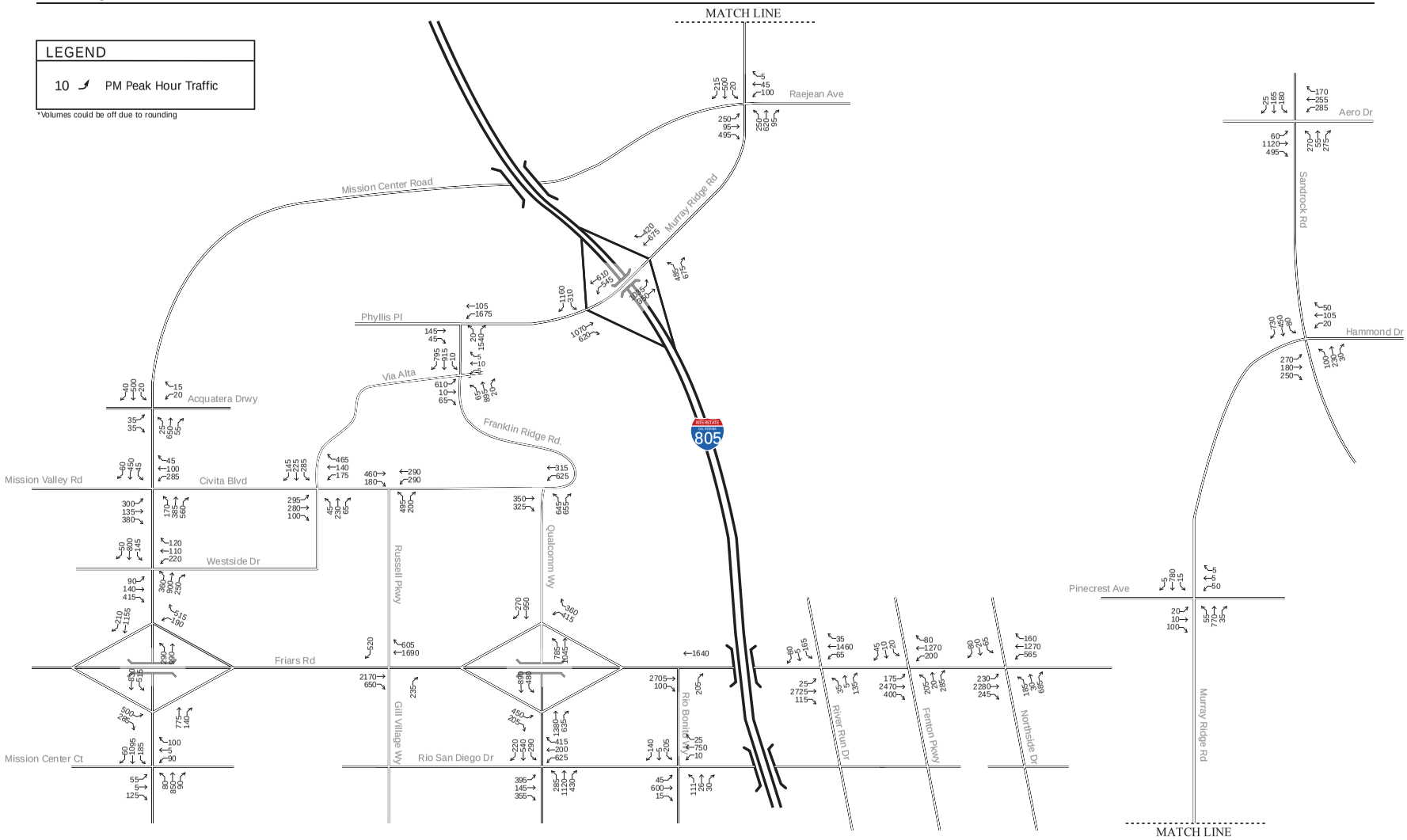

Figure 7-3
Long Term With PM Peak Hour Intersection Volumes

CHAPTER 8
COMMUNITY ACCESSIBILITY

BACKGROUND

The Serra Mesa and Mission Valley Community Plans acknowledge the importance of reducing commuter and through traffic. The plans also promote the reduction of overall automobile use for trips within and through each community. This chapter addresses the role of bikes and transit in the plan. Additionally, emergency service access, evacuation, access to social and educational resources, and commercial shopping access is discussed pertaining to the needs of the community as a whole, and as affected by the presence or absence of the Franklin Ridge Road Connector.

BIKE LANES

Bicycle facilities provide service interconnecting the Mission Valley Area. Class II Bike Lanes are designated all along Friars Road within the project study area. There are also Class II Bike Lanes along Mission Center Road. The Mission Valley Bike System connects to neighboring communities' bike systems including through the San Diego River Trail. In addition to Mission Center Road and Friars Road, Qualcomm Way also has Class II Bike Lanes.

The Civita development when fully completed will also feature bicycle facilities through the project; namely, the addition of Class II Bike Lanes to Civita Boulevard, Via Alta, and Franklin Ridge Road. These connections will allow cyclists to connect from residence and commercial sectors within the development to the greater Mission Valley Bike System.

In the future, the potential Franklin Ridge Road connection would provide additional bicycle access into the Mission Valley community from the Serra Mesa community and vice versa. The Franklin Ridge Road connection would also improve regional connectivity for cyclists at it would ultimately provide another north-south route for cyclists to travel into and out of Mission Valley onto the greater San Diego regional bike network.

BUS SERVICE

Numerous bus routes serve the Mission Valley area. The Metropolitan Transit System (MTS) provides bus service to the Mission Valley area. These bus lines provide access to the area as well as transfer opportunities to and from locations outside of the area. Mission Valley is served primarily by bus routes 6, 14, and 18 (bus routes 14 and 18 are new routes, replacing service previously provided by the re-routed bus route 13 and the eliminated bus route 18). Bus route 6 operates every 30 minutes and routes 14 and 18 operate every 45 minutes. In addition, bus routes 20, 25, 41, and 298 make limited stops in Mission Valley. MTS Route Maps and schedules can be found in Appendix L.

In the future MTS could take advantage of a new road connection using Franklin Ridge Road to introduce bus service between Mission Valley and Serra Mesa via that route. However, in earlier discussions no commitment was made about actually providing such service or changing the route structure to accommodate that.

LIGHT RAIL

The MTS Light Rail Transit (LRT) runs through Mission Valley connecting Old Town and Downtown San Diego with Qualcomm Stadium, San Diego State University and cities to the east. This system further connects downtown San Diego to the San Diego/Mexico border and as far-east as Santee. Extension of the system is planned for a northerly route to the University of California at San Diego and to University Town Center in the next few years.

Within Mission Valley, the trolley service runs parallel to and all along Friars Road with stops located at Fashion Valley Transit Center, Mission Center Rd/Hazard Center Dr, Mission Valley Center, Qualcomm Way (Rio Vista West), Fenton Parkway and Qualcomm Stadium. The stop closest to Civita is located at Rio Vista West, less than 2,000 feet from Civita's southern border. Pedestrian access to the Rio Vista West trolley station will occur via the sidewalks along Qualcomm Way. While the potential Franklin Ridge Road connection wouldn't directly add LRT connectivity, the connection could provide additional overall connectivity from Serra Mesa to the LRT line.

COMMUNITY ACCESS

In addition to the conventional measures of traffic congestion, delay and level of service there are considerations about the effect of having a connection between the Serra Mesa and Mission Valley communities to consider. These involve the effects upon emergency access, evacuation, access to social, educational resources and commercial shopping as well as the service needs of the affected communities on either side of the potential connection. This section shall explore those issues further.

To get a better understanding of the effect on access we shall employ two reference points to and from which the relative access times can be measured for both the with Franklin Ridge Road connection and without Franklin Ridge Road connection alternative. One of these is at the top or north end of the potential connection at the midpoint of the junction between Murray Ridge Road and I-805. The other point from which comparative times are calculated is at the south end at the midpoint of the junction between Friars Road and Qualcomm Way. The time to or from each of these two points to the amenity being considered is determined by identifying the logical least time route, measuring the distance and applying a speed for surface street travel and another for freeway speed travel. Any differences showing a greater time for one or the other alternative indicate a longer typical time for access.

For hospitals we have included the four nearest hospitals. Those include Sharp Memorial hospital facilities near Frost Street and Kearny Villa Road in Clairmont Mesa, Kaiser Permanente on Zion Road in Grantville, and the Scripps Mercy Hospital and UCSD Hospitals, both in Hillcrest. The times to each of the four facilities are calculated for each of the two points identified above, and the process is repeated for the two alternatives of with the connection and the absence of a connection via Franklin Ridge Road. The time is then averaged for the point at the north and south end of the study area and presented in Table 8-1 along with the other results.

In the case of fire and emergency medical services which are typically dispatched from a fire station, we have identified the several stations surrounding the study area that could potentially provide a response to an incident. This includes the new fire station 45 on Friars Road presently under construction. A similar process of determining paths, distances to each of the two points at the north and south end of the study area, converting this information to times and averaging the results was applied to the several fire stations. Again results are presented in Table 8-1. We have not considered police response from the system of substations since police are more typically dispatched from a moving vehicle that could be anywhere on the roadway system rather than awaiting a call from a fixed facility. Also refer to Figure 8-1 for a map of facilities considered in this analysis and Appendix M for the derivation tables of the measures.

Relative to educational facilities we have included primary and secondary schools, and colleges in the measure of access convenience. That includes the nearest public schools which are mostly in Serra Mesa, Mesa College, University of San Diego and San Diego State University but not UCSD since it is further and the relative time difference by any route considered here would be less of an issue.

Community facilities include the nearest libraries and parks in each community along with community centers and associated recreational facilities. Travel times to this collection of facilities have been established using the same methods for each of the alternatives.

A measure for the shopping, community barrier, and out-of-directional travel is considered together by simply determining the travel time between our two reference points. Absent a connection the logical path to travel between these two points would make use of Mission Center Road leading to and from Murray Ridge Road, whereas with a connection a driver could simply proceed through the middle of the Civita project using Franklin Ridge Road. Clearly Mission Valley has a greater range and diversity of shopping opportunities than Serra Mesa given that one community is predominantly commercial while the other is predominantly residential in character.

Table 8-1
Community Access Travel Times

Facility Type	Representative Accessibility Time Traveled (min.)	
	Without Connection	With Connection
Hospitals	39	31
Fire Departments	42	32
Schools	153	135
Libraries	40	32
Shopping Centers	69	57
Parks	58	50

Other considerations about access include emergency evacuation and routing. In areas like San Diego where wildfires have periodically threatened communities the need to quickly and effectively evacuate is a consideration. This is especially the case where only one route of access exists. The one portion of the study area that is effectively a cul-de-sac community are the two hundred plus homes in Serra Mesa at the western end of Phyllis Place on the north rim of Mission Valley. These homes have one public access route via Phyllis Place leading to I-805 or further to the east and continuing on surface streets like Murray Ridge Road. Also, Phyllis Place is constructed as a two lane collector street having a nominal (i.e. policy-based rather than actual) capacity of 8,000 vehicles per day. By introducing a connection between Mission Valley and Serra Mesa via Franklin Ridge Road connecting to Phyllis Place about nine hundred feet west of I-805 a second choice for evacuation of these two hundred plus home could exist, but only in part. They would still have to get to the intersection of the newly created roadway to Mission Valley using Phyllis Place as a two-lane roadway. Therefore, we see limited additional benefit to these two hundred plus homes for evacuation by having a road connection, and all of the other surrounding communities have multiple access or egress routes.

Part of servicing of communities includes deliveries to residences and businesses, postal delivery, utility servicing and trash pick up. In these respects the presence or absence of the road connection on Franklin Ridge Road is not a differentiating factor relative to these items. Service is now being provided for these activities, and it will continue to be provided whether or not there is a connection between the two communities via the subject road. If a connection were to exist it might represent an opportunity to redefine some of the routing for delivery drivers and therefore create an efficiency for UPS or USPS, for example, but the ability to continue to provide service is not affected. Service would continue either way.

ALTERNATIVES TO THE PROJECT

In addition to the simply having the proposed road connection of Franklin Ridge Road to Phyllis Place, or not, there are some alternatives that are worth considering. These alternatives revolve around the classification of the road connection, if there is to be one, and the additional amenities for pedestrians and bicyclists. In addition, even if the connection did not exist for public traffic, it might be possible to have

emergency access between the communities and some form of pedestrian and bicycle access. Each of these conditions is discussed below.

One alternative to consider is the classification of Franklin Ridge Road. The classification of the Franklin Ridge Road connection based on the volumes projected in the study approach 35,000 vehicles per day. This volume is consistent with a four-lane major road operating at a level of service of D, which is an acceptable level. The next lower classification would be a four-lane urban collector that has a maximum desirable volume of 25,000 ADT. The basic difference between the major and collector standard is the width and presence of a raised median in the major roadway versus simply a narrower, painted two-way left turn lane in the center of the collector roadway. There are some other design differences pertinent to maximum grade, super-elevation, design speed, and curve radius as well. Both roadways are wide enough to accommodate bike lanes and parking. We would not expect the demand for traffic to vary appreciably between these alternatives, and the initial modeling performed by SANDAG confirmed that the desire to make a trip in the corridor is really the same irrespective of a minor difference in the capacity. Additionally, insofar as the intersection configuration at the top of the hill is concerned they offer the same basic availability of lanes in either alternative. So, the essential points that distinguish one alternative from another are:

- The major road designation is consistent with the maximum recommended volumes in the City's Street Design Manual, whereas the collector road would not be.
- The real difference between the alternatives would be the presence of a raised median which prevents turns across, in the major classification versus a narrower painted median with the collector classification.
- The two alternatives would have the same functionality at the intersections with other streets for handling peak traffic.
- Ultimately, to avoid unacceptable levels of service during peak periods either alternative would need additional turning lanes or improvements where Franklin Ridge Road meets Phyllis Place.

Another alternative that has been considered is the availability of bicycle lanes on the connecting roadway. Given the general limited amount of available roadways between Mission Valley and the communities on the north or south, bicycle lanes are assumed to be important. The design standard for a major or collector roadway of four lanes includes sufficient room for six foot bicycle lanes plus another eight feet for parking. Those lanes would be striped as a matter of course in construction. This type of bicycle lane is a painted lane usually called a "Class II" bicycle lane. If it were to be determined to enhance that bicycle lane to become buffered with a painted, parallel area or perhaps protected raised median buffer as a cycle track, then the parking would have to be sacrificed or the road would have to be widened further. This circumstance is the same for either classification, major or collector. To summarize the considerations:

- If a connecting roadway were to be built bicycle lanes would be part of the default cross section for the roadway.
- If it were desirable to enhance the Class II bicycle lane to a buffered or protected bicycle lane it could be done at the expense of parking.
- If no roadway connection were to be built then a bicycle lane or pathway of some type would still be a valuable feature to enable bicyclists to get between Serra Mesa and Mission Valley.

Sidewalk availability is another alternative consideration along the proposed connection area. In the City's Street Design Manual the space behind the curb to the ROW line is known as the Urban Parkway, and it can vary in width from fourteen to twenty two feet depending on the type of parkway selected for a major roadway. This area presents opportunities for how to handle the sidewalk and landscaping adjacent to the street, and the sidewalk portion would be wider than the typical five foot residential type sidewalk. If it was decided to limit the sidewalk to one side and deviate from the standard due to some other considerations, then it would have to be determined on which side to place it. Given the preponderance of right and left turning movements towards and away from the I-805 at the top of the grade at the

intersection with Phyllis Place at Franklin Ridge Road we would rather see pedestrians use the west leg of the intersection which has the lesser volumes and far fewer turning conflicts. To summarize the points:

- The nominal roadway standards include generous sidewalks on both sides of the street for Franklin Ridge Road.
- If a design deviation from these standards were to be considered to have only one side with a sidewalk, place in on the west side of the street to have pedestrians delivered to the west leg of the intersection with Phyllis Place.

Another alternative for consideration involves a pedestrian and bicycle only path should there be no public road connection via Franklin Ridge Road to Phyllis Place. Were there not to be a roadway connection there would at least be some public pedestrian and bicycle path system for those users to get between the two communities even if vehicles could not make that connection, particularly since a park will be created at the upper end of the grade along Phyllis Place.

A final alternative involves whether to make provisions for an emergency barricade of some type. Previously in this chapter we have developed some measures of response time and the time to get to hospitals in the section discussing those issues, and the Fire Department may also have some preferences about barricades. We would observe that any barrier or device that limits traffic to certain vehicles would add some time to a response run, and occasionally the technology used in some devices can fail at a time when that might have other consequences. Ultimately, the emergency vehicle drivers and dispatchers will make their choice of whether to make themselves dependent on traveling through a barricade device depending on circumstances at that time. If a provision is made for this it would allow that choice to occur in the future.

- A provision for emergency vehicle-only use of a connecting facility can be provided in the ultimate design.
- The degree to which emergency vehicle drivers would make use of such a connection remains to be seen.
- If no public road connection is made it would appear logical to provide for pedestrian, bicycle and emergency vehicle access together.

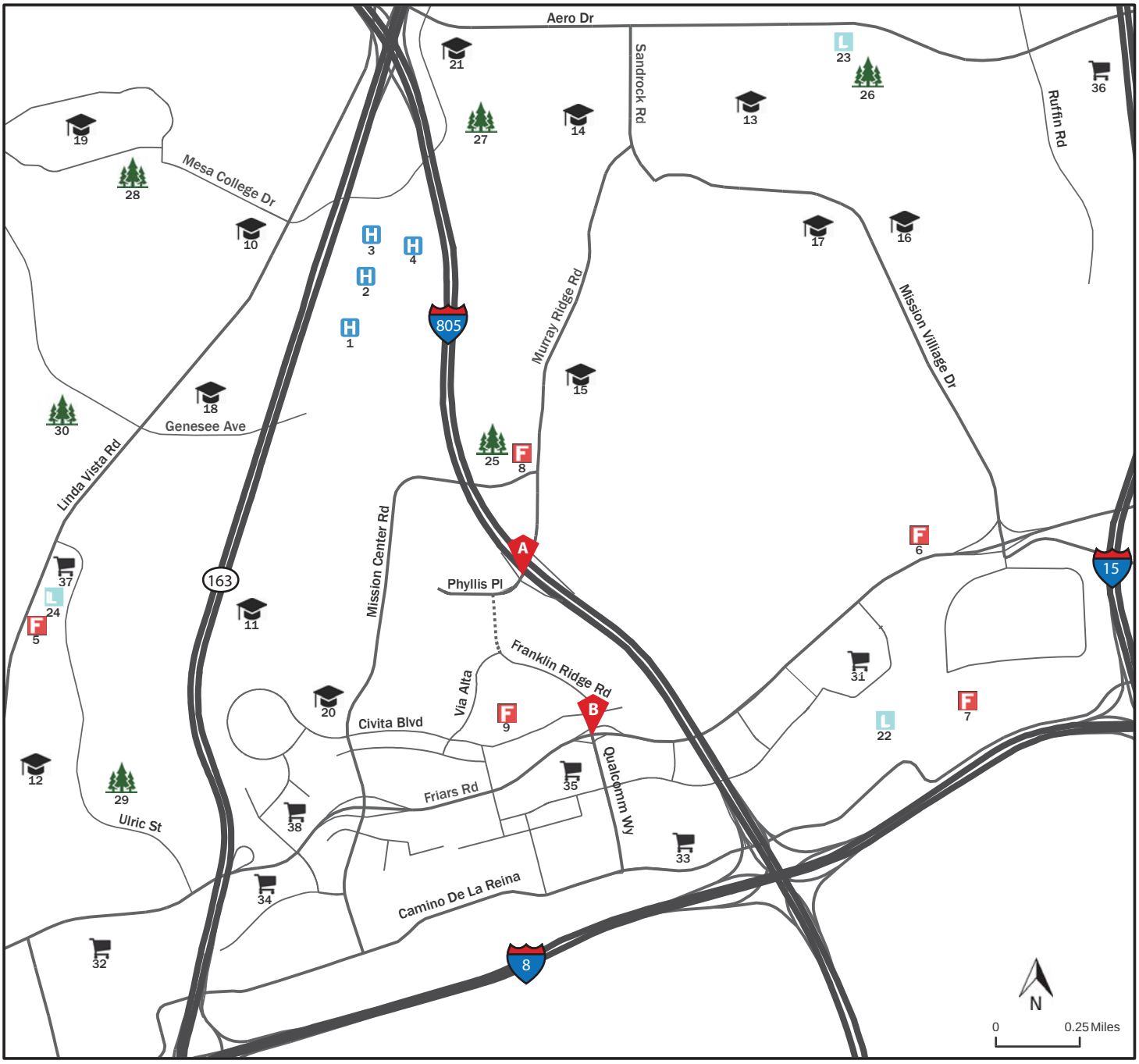

LEGEND

Hospitals	School	Marker Location (A&B)
Fire Departmennt	Retail / Shopping	12 Facility Reference Number
Library	Park	

Figure 8-1
Facility Accessibility Map

CHAPTER 9
SUMMARY OF IMPACTS AND MITIGATIONS

Direct impacts were analyzed for both the Opening Day (2017) and Long Term (2035) scenarios. Mitigations were determined for With Franklin Ridge Road Connection in both time conditions. Significance is determined by thresholds set by the City of San Diego. Tables detailing these significance thresholds can be found in Appendix C. To determine direct impacts, we compared the Opening Day (2017) conditions with the Baseline Existing (2012) conditions with the significance thresholds. To determine cumulative impacts we compared the Long Term (2035) conditions with the Baseline Existing (2012) conditions.

Table 9-1 summarizes the impacts found in both the With Frankling Ridge Road Connection scenario and the Without Franklin Ridge Road Connection scenario for the Opening Day (2017) conditions. Table 9-2 summarizes the impacts found in both the With Frankling Ridge Road Connection and the Without Franklin Ridge Road Connection scenarios for the Long Term (2035) conditions.

Again, for the purposes of this report mitigations were only analyzed for the With Franklin Ridge Road Connection scenario. Table 9-2 describes the impacts found in Opening Day (2017) and the corresponding mitigations while Table 9-4 describes the impacts and their corresponding mitigations for the Long Term (2035) condition.

Table 9-1
Significant Impact Comparison – Opening Day (2017) vs Existing Conditions (2012)

Opening Day (2017) vs Existing Conditions (2012) Impacts	
Without Franklin Ridge Road Connection	With Franklin Ridge Road Connection
Segmental Impacts	
Mission Center Road from Acquatera Drive to Murray Ridge Road	
	Phyllis Place from Franklin Ridge Road to I-805 SB Ramp
	Phyllis Place from I-805 SB Ramp to I-805 NB Ramp
Murray Ridge Road from I-805 NB Ramp to Mission Center Road	Murray Ridge Road from I-805 NB Ramp to Mission Center Road
Murray Ridge Road from Mission Center Road to Pinecrest Avenue	Murray Ridge Road from Mission Center Road to Pinecrest Avenue
	Murray Ridge Road from Pinecrest Avenue to Sandrock Road
Intersection Impacts	
	Murray Ridge Road / I-805 NB ramp
	Murray Ridge Road / I-805 SB ramp
	Qualcomm Way / Friars Road WB Ramp
Friars Road / Northside Drive	Friars Road / Northside Drive
Freeway Mainline Impacts	
I-805 NB from I-8 to SR-163	I-805 NB from I-8 to SR-163
I-805 SB from SR-163 to I-8	I-805 SB from SR-163 to I-8
Freeway Ramp Meter Impacts	
	I-805 NB On-Ramp at Murray Ridge Road

Table 9-2
Significant Impact Comparison – Long Term (2035) vs Existing Conditions (2012)

Long Term (2035) vs Existing Conditions (2012) Impacts	
Without Franklin Ridge Road Connection	With Franklin Ridge Road Connection
Segmental Impacts	
Mission Center Road from Acquatera Drive to Murray Ridge Road	Mission Center Road from Acquatera Drive to Murray Ridge Road
	Phyllis Place from Franklin Ridge Road to I-805 SB Ramp
Phyllis Place from I-805 SB Ramp to I-805 NB Ramp	Phyllis Place from I-805 SB Ramp to I-805 NB Ramp
Murray Ridge Road from I-805 NB Ramp to Mission Center Road	Murray Ridge Road from I-805 NB Ramp to Mission Center Road
Murray Ridge Road from Mission Center Road to Pinecrest Avenue	Murray Ridge Road from Mission Center Road to Pinecrest Avenue
Murray Ridge Road from Pinecrest Avenue to Sandrock Road	Murray Ridge Road from Pinecrest Avenue to Sandrock Road
Rio San Diego Drive from Qualcomm Way to Rio Bonito Way	Rio San Diego Drive from Qualcomm Way to Rio Bonito Way
Intersection Impacts	
Friars Road / Northside Drive	Friars Road / Northside Drive
Mission Center Road / Murray Ridge Road	
	Murray Ridge Road / Sandrock Road
	Murray Ridge Road / I-805 NB ramp
Murray Ridge Road / I-805 SB ramp	Murray Ridge Road / I-805 SB ramp
Qualcomm Way / Friars Road WB Ramp	Qualcomm Way / Friars Road WB Ramp
Qualcomm Way / Friars Road EB Ramp	Qualcomm Way / Friars Road EB Ramp
Qualcomm Way / Rio San Diego Drive	Qualcomm Way / Rio San Diego Drive
	Via Alta / Franklin Ridge Road
Freeway Mainline Impacts	
I-805 NB from I-8 to SR-163	I-805 NB from I-8 to SR-163
I-805 SB from SR-163 to I-8	I-805 SB from SR-163 to I-8
Freeway Ramp Meter Impacts	
	I-805 NB On-Ramp at Murray Ridge Road
	I-805 SB On-Ramp at Murray Ridge Road

Table 9-3
Impact Mitigation Opening Day (2017) With Connection vs Existing Conditions (2012)

Number (#)	Opening Day (2017) Impacts With Franklin Ridge Road Connection vs Baseline	
	Location	Mitigation
Segmental Impacts		
1	Phyllis Place from Franklin Ridge Road to I-805 SB Ramp	Phyllis Place will be widened to accommodate 2 lanes in each direction. The new classification for Phyllis Place will be a 4-lane collector. This increases capacity and raises the LOS from F to D.
2	Phyllis Place from I-805 SB Ramp to I-805 NB Ramp	Phyllis Place will be restriped to accommodate 2 lanes in each direction. The new classification for Phyllis Place will be a 4-lane collector. This increases capacity and raises the LOS from F to C.
3	Murray Ridge Road from I-805 NB Ramp to Mission Center Road	Murray Ridge Road will be restriped to accommodate 2 lanes in each direction. The new classification for Murray Ridge Road will be a 4-lane Collector. This raises the LOS from F to D.
4	Murray Ridge Road from Mission Center Roadto Pinecrest Avenue	Murray Ridge Road will be restriped to accommodate 2 lanes in each direction. The new classification for Murray Ridge Road will be a 4-lane Collector. This raises the LOS from F to C.
5	Murray Ridge Road from Pinecrest Avenue to Sandrock Road	Murray Ridge Road will be restriped to accommodate 2 lanes in each direction. The new classification for Murray Ridge Road will be a 4-lane Collector. This raises the LOS from E to C.
Intersection Impacts		
1	Friars Road / Northside Drive	To mitigate this intersection would require the acquisition of additional right of way on the south leg of the intersection. Moreover, the impact at this location is a result of regional growth and not additional project trips.
2	Murray Ridge Road / I-805 NB ramp	This intersection will be reconfigured to add an additional left turn lane onto the I-805 NB On-Ramp. This will reduce the delay to 30.4 seconds in the PM Peak Hour and an LOS of C.
3	Murray Ridge Road / I-805 SB ramp	This intersection will be reconfigured to add 2 additional lanes on the southern intersection leg such that two lanes will provides through access across the bridge and one lane will become a dedicated right turn lane onto I-805 S. Additionally a second left turn lane will be added on the north leg of the intersection for southbound traffic turning onto I-805 S. This will reduce the delay to 27.0 seconds in the PM Peak Hour and an LOS of C.
4	Qualcomm Way / Friars Road WB Ramp	This intersection will be reconfigured to add an additional through lane and left turn lane on the south leg of the intersection from Qualcomm Way to Friars Road. On the north leg of the intersection, two additional southbound through lanes will be added crossing Friars Road and one through / right turn lane will be converted to a right turn only lane. The final configuration for the north leg will be 3 through lanes and 1 right turn lane. This will reduce the delay to 32.4 seconds in the PM Peak Hour and an LOS of C.
Freeway Ramp Meter Impacts		
1	I-805 NB Ramp @ Murray Ridge Road	To mitigate this on-ramp, an HOV ramp lane would need to be constructed. This would provide the needed capacity to prevent excess demand, delay and queuing.

Table 9-4
Impact Mitigation Long Term (2035) With Connection vs Existing Conditions (2012)

Number (#)	Long Term (2035) Impacts With Franklin Ridge Road Connection vs Baseline	
	Location	Mitigation
Segmental Impacts		
1	Phyllis Place from Franklin Ridge Road to I-805 SB Ramp	Phyllis Place will be restriped to accommodate 2 lanes in each direction. The new classification for Phyllis Place will be a 4-lane collector, increasing capacity of the segment. The LOS remains F but the V/C ratio improves from 3.45 to 1.15.
2	Phyllis Place from I-805 SB Ramp to I-805 NB Ramp	Phyllis Place will be restriped to accommodate 2 lanes in each direction. The new classification for Phyllis Place will be a 4-lane collector, increasing capacity of the segment and raising the corresponding LOS from F to D.
3	Murray Ridge Road from I-805 NB Ramp to Mission Center Road	Murray Ridge Road will be restriped to accommodate 2 lanes in each direction. The new classification for Murray Ridge Road will be a 4-lane Collector. This will raise the corresponding LOS from F to E.
4	Murray Ridge Road from Mission Center Road to Pinecrest Avenue	Murray Ridge Road will be restriped to accommodate 2 lanes in each direction. The new classification for Murray Ridge Road will be a 4-lane Collector. This will raise the corresponding LOS from F to D.
5	Murray Ridge Road from Pinecrest Avenue to Sandrock Road	Murray Ridge Road will be restriped to accommodate 2 lanes in each direction. The new classification for Murray Ridge Road will be a 4-lane Collector. This will raise the corresponding LOS from F to C.
6	Mission Center Road from Acquatera Drive to Murray Ridge Road	Mission Center Road will be widened to accommodate an extension of the existing uphill climbing lane all the way up to Murray Ridge Road. This will result in two lanes ascending towards Murray Ridge Road and one lane descending towards Mission Valley. This will increase the capacity and raise the corresponding LOS from F to E.
7	Rio San Diego Drive from Qualcomm Way to Rio Bonito Way	Rio San Diego Drive will be reclassified to a 4-lane Major. This reclassification raises the capacity of the roadway and improves the LOS from E to C.
Intersection Impacts		
1	Friars Road / Northside Drive	To mitigate this intersection would require the acquisition of additional right of way on the south leg of the intersection. Moreover, the impact at this location is a result of regional growth and not additional project trips.
2	Murray Ridge / Sandrock Road	Intersection geometry at the intersection will be reconfigured such that the left turn lanes in both the northbound and southbound direction will allow both through movements and left turns. The new delay will be 24.5 seconds in the PM Peak Hour for an LOS of C.
3	Murray Ridge Road / I-805 NB ramp	This intersection will be reconfigured to add an additional left turn lane onto the I-805 NB On-Ramp. The cycle length is then optimized. The delay will improve from 148.8 to 56.0 seconds for an LOS of E.
4	Murray Ridge Road / I-805 SB ramp	This intersection will be reconfigured to add 2 additional lanes on the southern intersection leg such that two lanes will provides through access across the bridge and one lane will become a dedicated right turn lane onto I-805 S. Additionally a second left turn lane will be added on the north leg of the intersection for southbound traffic turning onto I-805 S. The cycle length is then optimized. The delay will improve from 404 seconds to 112.5 seconds for an LOS of F.
5	Qualcomm Way / Friars Road WB Ramp	This intersection will be reconfigured to add an additional through lane and left turn lane on the south leg of the intersection from Qualcomm Way to Friars Road. On the north leg of the intersection, two additional southbound through lanes will be added crossing Friars Road and one through / right turn lane will be converted to a right turn only lane. The final configuration for the north leg will be 3 through lanes and 1 right turn lane. This will reduce the delay to 40.5 seconds in the PM Peak Hour and an LOS of D.
6	Qualcomm Way / Friars Road EB Ramp	This intersection will be reconfigured to add an additional left turn lane on the west leg of the intersection on the Friars Road EB Ramp from Friars road onto Qualcomm Way. The intersection timing will then be optimized. The delay will improve from 60.8 to 48.8 seconds for an LOS of E.

Intersection Impacts (cont.)		
7	Qualcomm Way / Rio San Diego Drive	This intersection will be reconfigured to add an additional right turn lane on the south leg of the intersection on the Qualcomm Way turning to Rio San Diego Drive. The intersection will then be optimized for cycle length. The delay will improve from 106 to 55.8 seconds for an LOS of E.
8	Via Alta / Franklin Ridge Road	This intersection will be reconfigured such that the EB through/right turn lane will be converted to a left/through/right turn lane to account for additional EB to NB traffic. The delay will improve from 106 to 55.8 seconds for an LOS of D.
Freeway Ramp Meter Impacts		
1	I-805 NB Ramp @ Murray Ridge Road	To mitigate this on-ramp, both an HOV ramp lane and an additional regular traffic ramp lane would need to be constructed. This would provide the needed capacity to prevent excess demand, delay and queuing in the Long Term (2035) With Connection scenario.
2	I-805 SB Ramp @ Murray Ridge Road	To mitigate this on-ramp, an additional regular traffic ramp lane would need to be constructed. This would provide the needed capacity to prevent excess demand, delay and queuing in the Long Term (2035) With Connection scenario.

Prepared By:

Arnold Torma, PE – Principal Engineer
Roger Pelayo – Associate Transportation Planner
Ryan Whipple – Assistant Engineer - Transportation

APPENDIX A

DIVERTED PROJECT TRIPS AND ROUTES

KOA CORPORATION
PLANNING & ENGINEERING

To: Nick Aboud & Leslie Henegar, City of San Diego
From: Arnold Torma, KOA Corporation
Re: Franklin Ridge/Phyllis Place Study - Scope and Study Area Refinement
KOA No.: JB04163
Date: June 27, 2013

This memo addresses the refinement of the study area for the project using SANDAG's Series 12 year 2035 model.Two models were used in the process of determining the study area, the Franklin Ridge Road select link and the Mission Center Road select link model. Following are the steps that explain the process of determining the study area.

The effects of the addition of the road connection can be measured by using two factors:

1. **"Locally Diverted" Traffic** – traffic that diverts to the new road connection from Mission Center, because the new road connection offers a more direct route.
2. **"Community Diverted" Traffic** – traffic that diverts to the new road connection from other arterials and freeways in the community, because the new road connection offers a more direct route. The locally diverted and community diverted model results are attached.

"Community Diverted" Traffic: The figure on the right depicts how we can deduce the community diverted traffic by using two model runs: one with the Franklin Ridge Road connection and one without the connection. Without the new connection there would be approximately 20,369 ADT predicted on Mission Center Road in 2035. As a frame of reference, the ADT on Mission Center Road in 2012 was approximately 9,034. With the new connection there would be 9,084 ADT trips on Mission Center and 32,167 ADT trips on the new connection for a total of 41,251 ADT traveling between Mission Valley and Serra Mesa. With the new road connection an additional 20,882 ADT would use the route that previously used other arterials to access their destination and the freeway. This is the total community diverted traffic caused by the Franklin Ridge Road connection.

"Community Diverted" Traffic: The figure to the right depicts the "Community Diverted" daily traffic trips around the network due to the Franklin Ridge Road connection.

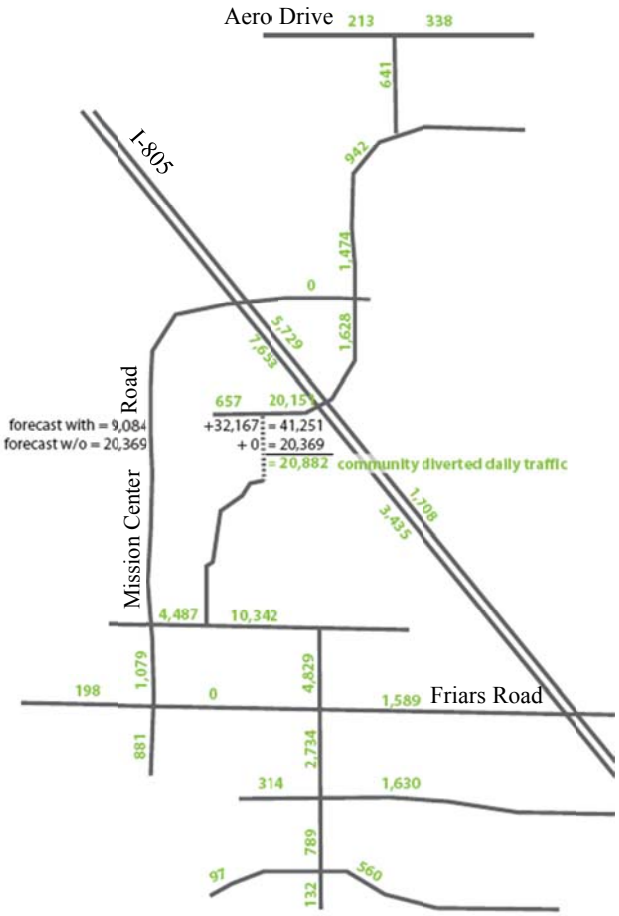

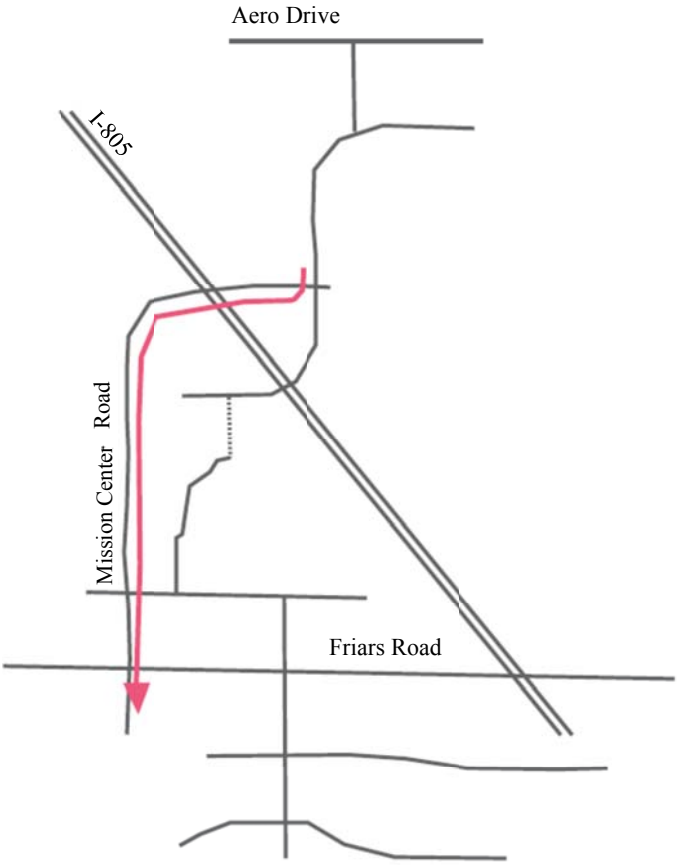

"Locally Diverted" Traffic: The figure at the left depicts the existing route that people in Serra Mesa take to access Mission Valley.

The figure to the right depicts the new route (in green) that some trips using the old route (in red) will take once the Franklin Ridge Road connection is available.

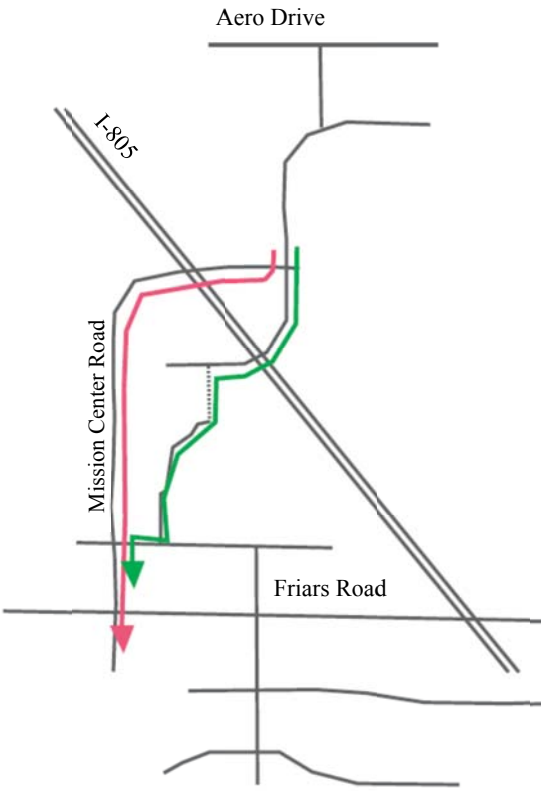

Of course trips from Mission Valley also access Serra Mesa (below left) and the freeway (below right) using the old route.

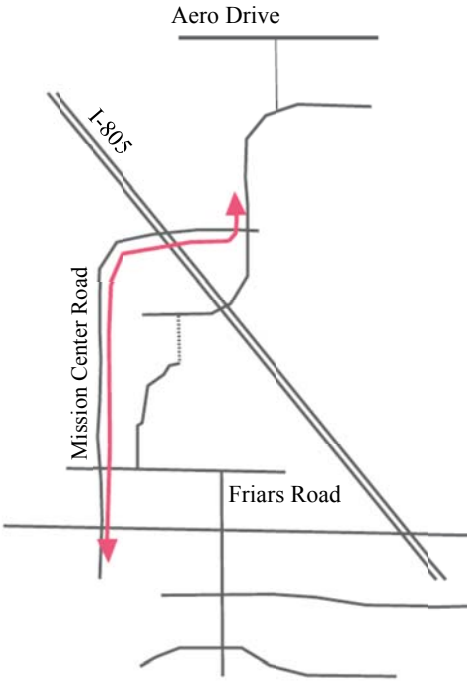

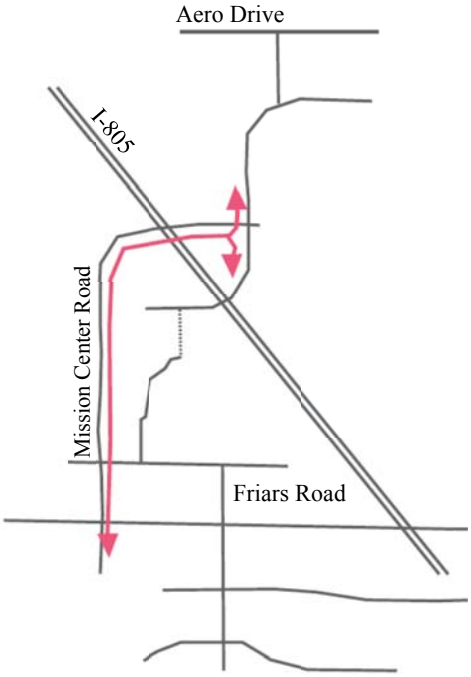

And elsewhere (see right). These old routes will experience a decrease in traffic as drivers use the new, more convenient route.

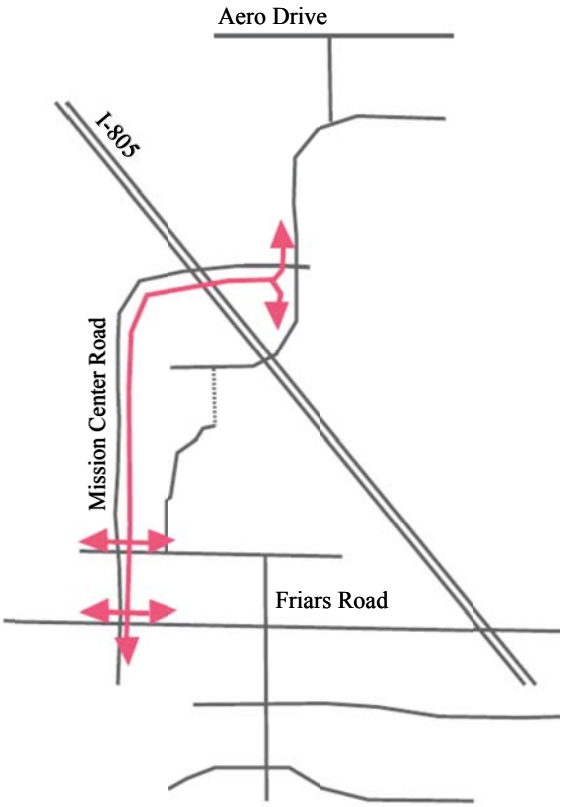

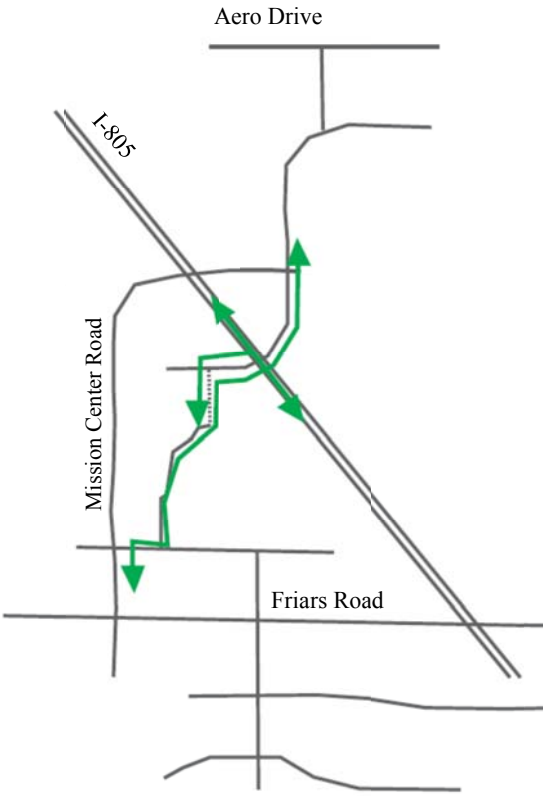

The new "locally diverted" routes also have multiple origins and destinations.

Just as we determined the community diverted daily traffic we can also determine the locally diverted traffic by comparing the two forecasts (with and without the Franklin Ridge Road connection). The figure to the right shows that Mission Center Road would carry approximately 9,084 ADT in 2035 with the road connection, reduced from 20,369 ADT without the road connection. So the total locally diverted trips are assumed to be 11,285 ADT.

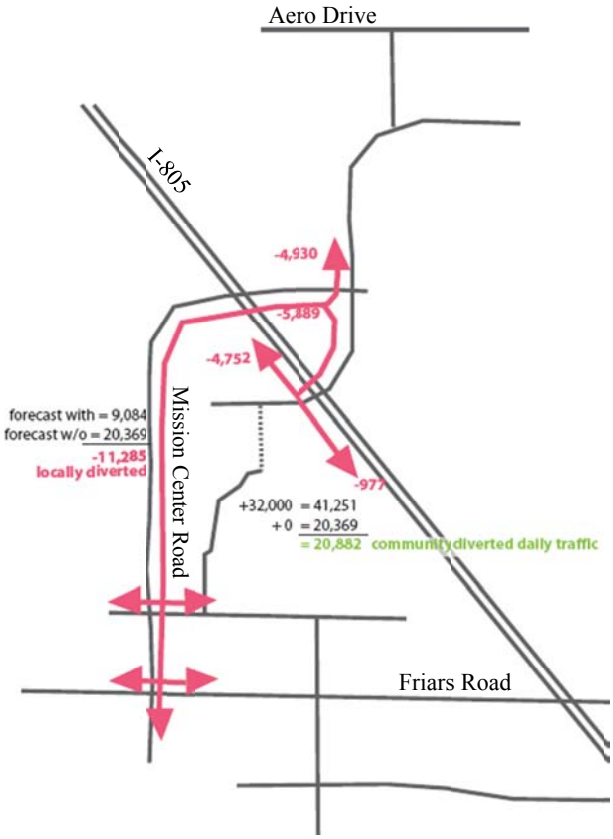

By using the Mission Center select link we can trace those reduced "locally diverted" trips through the network (left). As shown, 4,930 ADT was headed up into Serra Mesa and 5,889 ADT were headed to the I-805 freeway from Mission Valley along Mission Center Road.

With the new road connection those same 5,889 (4,752+977) ADT have a more direct route to the freeway through the new road connection and the 4,930 also head up the Franklin Ridge Road connection (below left). We can also trace those trips through the study area further (below right).

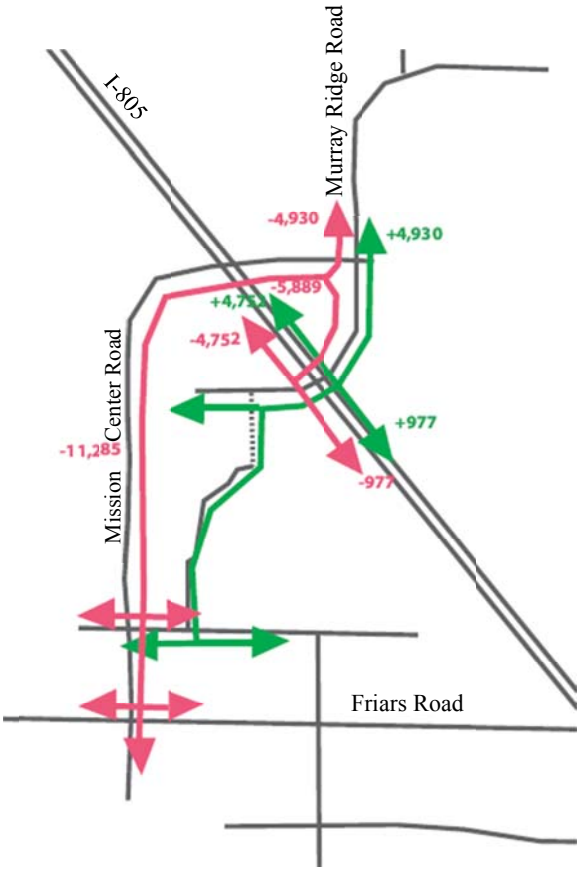

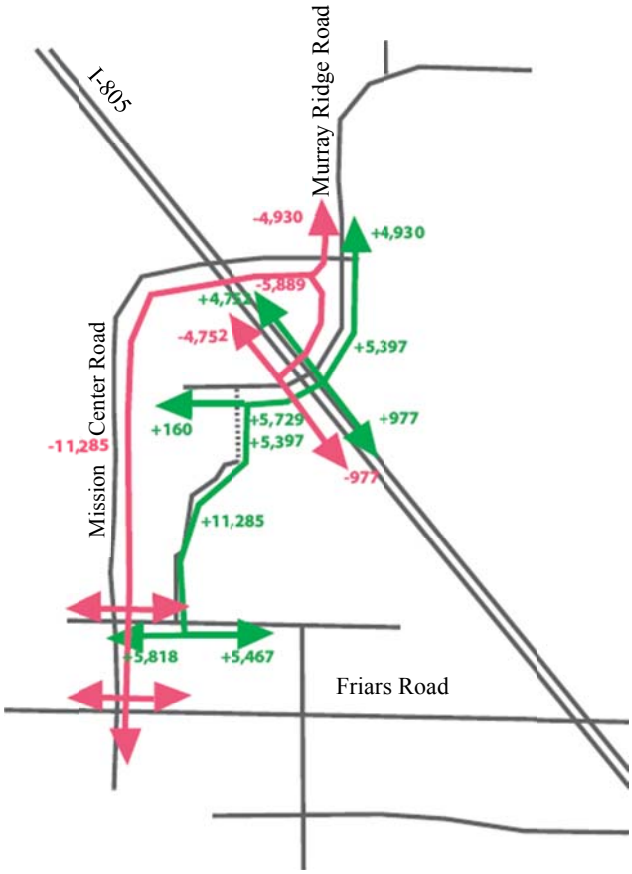

When the new routes (in green) are combined with the old routes (in red) the net result is the total effect of the project due to locally diverted trips (shown right). You can see that on Murray Ridge Road north of Mission Center there is zero net diversion as we would expect since trips that used to take Mission Center are simply continuing south on Murray Ridge Road through the new Franklin Ridge Road connection.

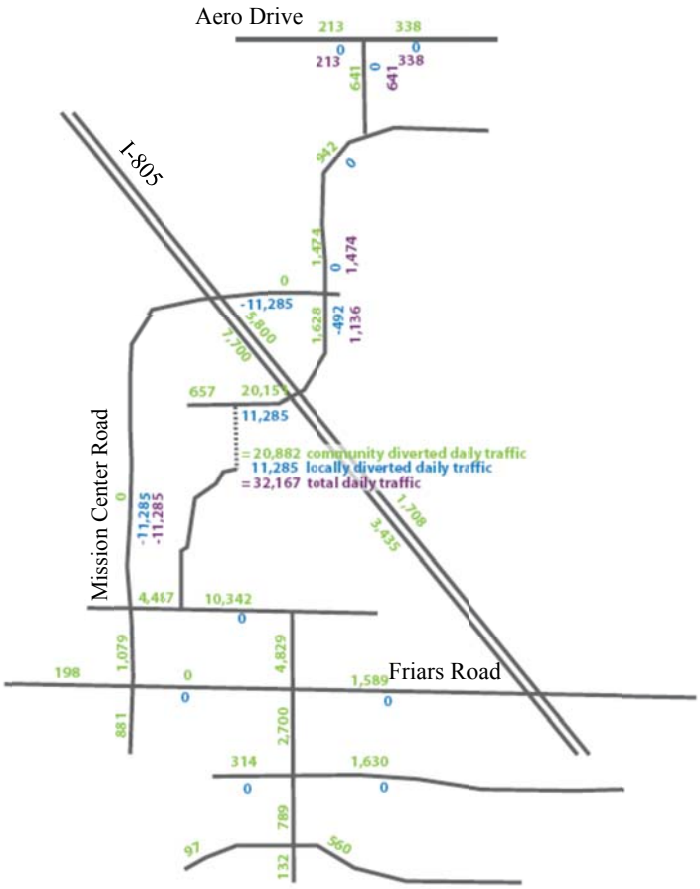

The Diverted Net Effect is then added to the Induced Effect to give the total Project Effect (left).

The locally diverted and community diverted model results are attached.

APPENDIX B

FORECAST MODELS

SANDAG
Series 12 Forecast
2011 RTP

2017 ADT Volume

2008 network
without project

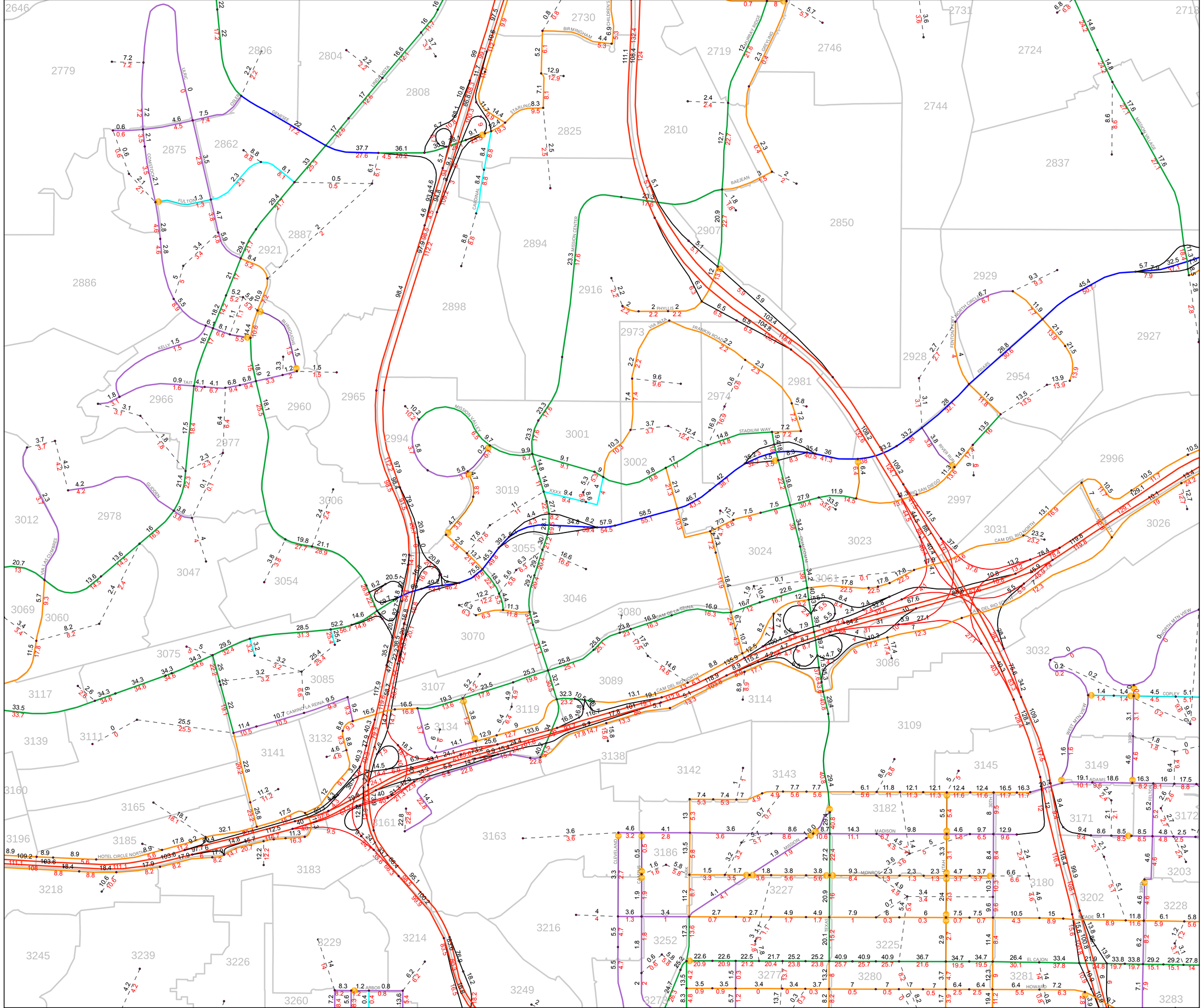

Functional Classifications

- Freeway
- Prime
- Major
- Collector
- Light Collector
- Rural Collector
- Local
- Freeway Ramp
- Local Ramp
- Zone Connector

Traffic Analysis Zones

Unadjusted ADT(x1000)

Adjusted ADT(x1000)

Portions of this map contain information from the San Diego Association of Governments (SANDAG) Regional Information System. This product cannot be reproduced without the written permission of SANDAG.

SAN DIEGO ASSOCIATION OF GOVERNMENTS
401 B STREET, SUITE 800
SAN DIEGO, CALIFORNIA 92101 USA
(619) 699-1900
E-mail: sandag@sandag.org
Web site: www.sandag.org

N

0 0.055 0.11 0.165
Miles

SANDAG

servicebureau

October 20, 2014

SANDAG
Series 12 Forecast
2011 RTP

2017 ADT Volume

2008 network
with project

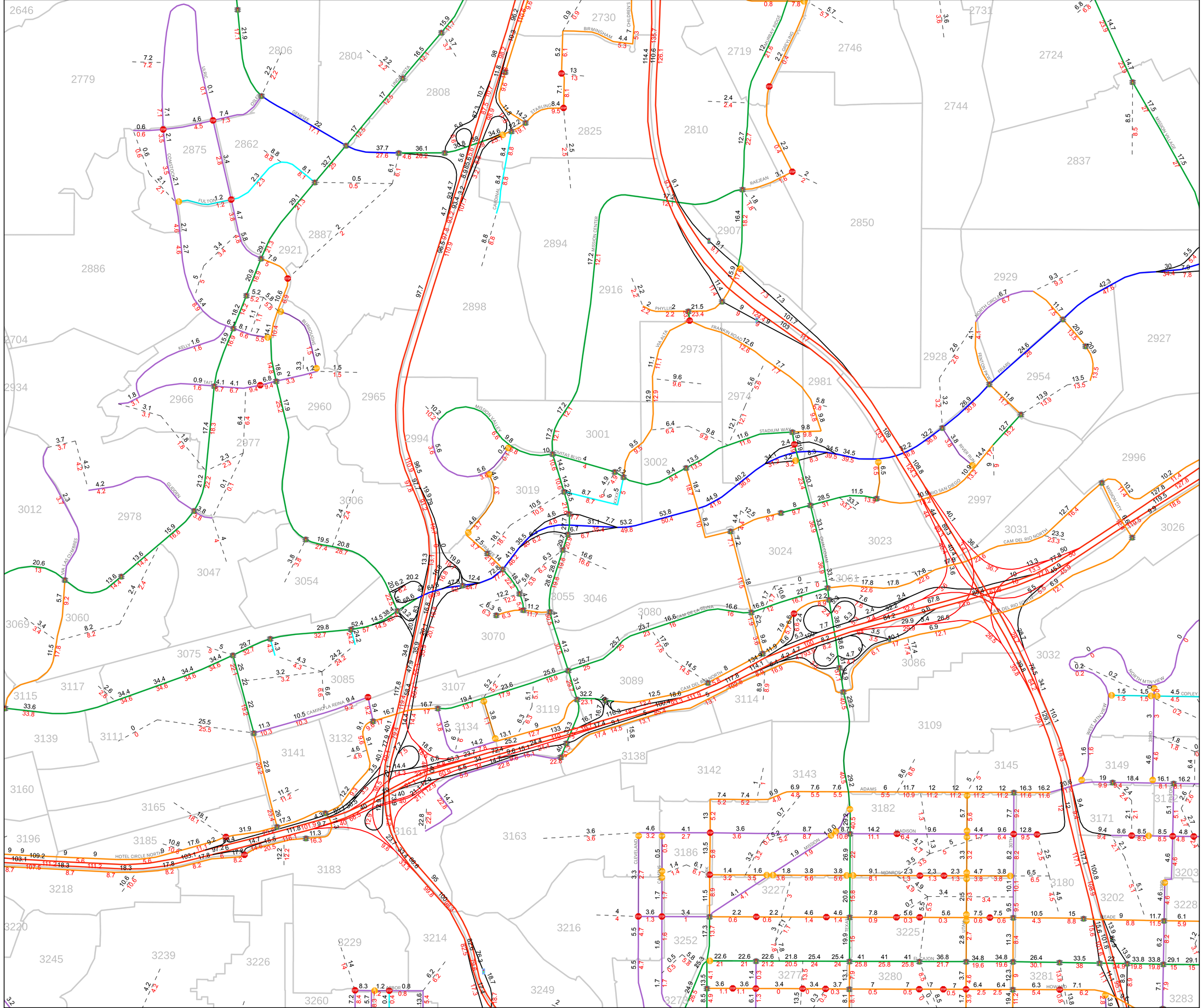

Functional Classifications

- Freeway
- Prime
- Major
- Collector
- Light Collector
- Rural Collector
- Local
- Freeway Ramp
- Local Ramp
- Zone Connector

Traffic Analysis Zones

Unadjusted ADT(x1000)

Adjusted ADT(x1000)

Portions of this map contain information from the San Diego Association of Governments (SANDAG) Regional Information System. This product cannot be reproduced without the written permission of SANDAG.

SAN DIEGO ASSOCIATION OF GOVERNMENTS
401 B STREET, SUITE 800
SAN DIEGO, CALIFORNIA 92101 USA
(619) 699-1900
E-mail: sandag@sandag.org
Web site: www.sandag.org

N

0 0.055 0.11 0.165
Miles

SANDAG
servicebureau

October 20, 2014

2035 B (Without Project) UVOL

2035 C (With Project) UVOL

APPENDIX C

LEVEL OF SERVICE CONCEPTS, ANALYSIS METHODOLOGIES, STANDARDS OF SIGNIFICANCE

Freeway Segment Level of Service Definitions

LOS	V/C	Congestion/Delay	Traffic Description
(Used for freeways and expressways)			
"F(0)"	>1.00-1.25	Considerable 0-1 hour delay	Forced flow, heavy congestion, long queues form behind breakdown points, stop and go.
"F(1)"	>1.25-1.35	Severe 1-2 hour delay	Very heavy congestion, very long queues.
"F(2)"	>1.35-1.45	Very Severe 2-3 hour delay	Extremely heavy congestion, longer queues, more numerous breakdown points, longer stop periods.
"F(3)"	>1.45	Extremely Severe 3+ hours of delay	Gridlock

Source: Caltrans, 1992.

LEVEL OF SERVICE (LOS) DEFINITIONS

The concept of LOS is defined as a qualitative measure describing operational conditions within a traffic stream, and the motorist's and/or passengers' perception of operations. A LOS definition generally describes these conditions in terms of such factors as speed, travel time, freedom to maneuver, comfort, convenience, and safety. Levels of service for freeway segments can generally be categorized as shown in the table above.

Roadway Capacity Standards

Street Classification	Lanes	Level of Service ADT[2]				
		A	B	C	D	E
Freeway	8 lanes	60,000	84,000	120,000	140,000	150,000
Freeway	6 lanes	45,000	63,000	60,000	70,000	80,000
Freeway	4 lanes	30,000	42,000	60,000	70,000	80,000
Expressway	6 lanes	30,000	42,000	60,000	70,000	80,000
Prime Arterial	6 lanes	25,000	35,000	50,000	55,000	60,000
Major Arterial	6 lanes	20,000	28,000	40,000	45,000	50,000
Major Arterial	4 lanes	15,000	21,000	30,000	35,000	40,000
Collector	4 lanes	10,000	14,000	20,000	25,000	30,000
Collector (no center lane)	4 lanes	5,000	7,000		13,000	15,000
(continuous left-turn lane)	2 lanes			10,000		
Collector (no fronting property)	2 lanes	4,000	5,500	7,500	9,000	10,000
Collector (commercial-industrial fronting)	2 lanes	2,500	3,500	5,000	6,500	8,000
Collector (multi-family)	2 lanes	2,500	3,500	5,000	6,500	8,000
Sub-Collector (single-family)	2 lanes	---	---	2,200	---	---

Legend:

[1]XXX/XXX = Curb to curb width (feet)/right of way width (feet): based upon the City of San Diego Street Design Manual.

[2]Approximate recommended ADT based upon the City of San Diego Street Design Manual.

Notes:

The volumes and the average daily level of service listed above are only intended as a general planning guideline.
Levels of service are not applied to residential streets since their primary purpose is to serve abutting lots, not carry through traffic.
Levels of service normally apply to roads carrying through traffic between major trip generators and attractors.

Arterial Level of Service Definitions

LOS	Class I (45 to 35 mph)	Class II (35-30 mph)	Class III (35 to 25)	LOS Characteristic
"A"	≥35	≥30	≥25	Speeds 90% of free-flow speed. minimal stopped delay
"B"	≥28	≥24	≥19	Speeds 70% of free-flow speed, delay not bothersome
"C"	≥22	≥18	≥13	Speeds 50% of free-flow speed, longer queues, noticeable delay
"D"	≥17	≥14	≥9	Speeds 40% of free-flow, substantial delay.
"E"	≥13	≥10	≥7	Speeds 30% of free-flow, high delay.
"F"	<13	<10	<7	Speeds 25% of free-flow, high delay, extensive queuing

LEVEL OF SERVICE (LOS) DEFINITIONS

The concept of LOS is defined as a qualitative measure describing operational conditions within a traffic stream, and the motorist's and/or passengers' perception of operations. A LOS definition generally describes these conditions in terms of such factors as speed, travel time, freedom to maneuver, comfort, convenience, and safety. Levels of service for arterial segments with a range of free-flow speeds can generally be categorized as shown in the table above.

Signalized Intersection Level of Service
Highway Capacity Manual Operational Analysis Method

The operational analysis method for evaluation of signalized intersections presented in the *2000 Highway Capacity Manual* (Transportation Research Board Special Report 209) defines level of service in terms of delay, or more specifically, control stopped delay per vehicle. Delay is a measure of driver and/or passenger discomfort, frustration, fuel consumption, and lost travel time.

Control Stopped Delay Per Vehicle (seconds)	Level of Service (LOS) Characteristics
<10	LOS A describes operations with very low delay. This occurs when progression is extremely favorable, and most vehicles do not stop at all. Short cycle lengths may also contribute to low delay.
>10 – 20	LOS B describes operations with generally good progression and/or short cycle lengths. More vehicles stop than for LOS A, causing higher levels of average delay.
>20 – 35	LOS C describes operations with higher delays, which may result from fair progression and/or longer cycle lengths. Individual cycle failures may begin to appear at this level. The number of vehicles stopping is significant at this level, although many still pass through the intersection without stopping.
>35 – 55	LOS D describes operations with high delay, resulting from some combination of unfavorable progression, long cycle lengths, or high volumes. The influence of congestion becomes more noticeable, and individual cycle failures are noticeable.
>55 – 80	LOS E is considered to be the limit of acceptable delay. Individual cycle failures are frequent occurrences.
>80	LOS F describes a condition of excessively high delay, considered unacceptable to most drivers. This condition often occurs when arrival flow rates exceed the capacity of the intersection. Poor progression and long cycle lengths may also be major contributing causes to such delay.

Source: Highway Capacity Manual 2000, Exhibit 16-2

MINOR STREET STOP AND ALL-WAY STOP CONTROLLED INTERSECTION LEVEL OF SERVICE HIGHWAY CAPACITY MANUAL OPERATIONAL ANALYSIS METHOD

The Highway Capacity Manual (HCM) analysis method for evaluating minor street stop intersections is based on the average total delay for each impeded movement. For all-way stop controlled intersections it is based on the average total delay for the entire intersection. As used here, total delay is defined as the total elapsed time from when a when a vehicle stops at the end of a queue until the vehicle departs from the stop line; this time includes the time required for the vehicle to travel from the last-in-queue to the first-in-queue position. The average total delay for any particular minor movement is a function of the service rate or capacity of the approach and the degree of saturation. The resulting delay is used to determine the level of service as shown in the following table.

Average Total Delay	Level of Service (LOS) Characteristics
0-10	*LOS A* – Little or no delay
>10 – 15	*LOS B* – Short traffic delay
>15 – 25	*LOS C* – Average traffic delay
>25 – 35	*LOS D* – Long traffic delays
>35 – 50	*LOS E* – Very long traffic delays
>50	*LOS F* – When the demand exceeds the capacity of the lane, extreme delays will be encountered and queuing may cause severe congestion to the intersection.

Source: Highway Capacity Manual 2000, Exhibit 17-22

Ramp Metering Rate – Murray Ridge Road

Location (I.D.)	Route	Dir	Period	Cars per green	Sec./ Cycle	(per lane) Veh./hr	Total # lanes	HOV
Murray Ridge Rd (11205)	805	NB	0530 - 0930	1	7.5 - 9.7	960 - 742	1	No
Phyllis Place (11203)	805	SB	1500 - 1900	2	7.5 - 17.0	960 - 422	2	Lt

The meters normally operate in a traffic responsive mode.
There are 15 separate rates or steps between the slowest and the fastest discharge rate that depend on the mainlane volumes.

Measure of Significant Project Impacts

Level of Service With Connection	Allowable Change due to Project Impact					
	Freeways		Roadway Segments		Intersections	Ramp Metering
	V/C	Speed (mph)	V/C	Speed (mph)	Delay (sec.)	Delay (min)
E, & F (or ramp meter delays above 15 min.)	0.01	1	0.02	1	2	2

PEAK HOUR VOLUME DATA

Peak hour volume data consists of hourly volume relationships and data location. The hourly volumes are expressed as a percentage of the Annual Average Daily Traffic (AADT). The percentages are shown for both the AM and the PM peak periods.

The principle data described here are the K factor, the D factor and their product (KD). The K factor is the percentage of AADT during the peak hour for both directions of travel. The D factor is the percentage of the peak hour travel in the peak direction. KD multiplied with the AADT gives the one way peak period directional flow rate or the design hourly volume (DHV). The design hourly volume is used for either Operational Analysis or Design Analysis. Refer to the 2010 Highway Capacity Manual for more details.

Following is a glossary of terms used in this listing of peak hour volume data:

Dir	Indicates direction of travel for peak volume
AADT	Annual Average Daily Traffic in vehicles per day (vpd).
AM Peak	Represents the morning peak period for traffic analysis
CS	Control Station Number, Caltrans identification number for monitoring site.
CO	County abbreviation used by Caltrans
D	D factor. The percentage of traffic in the peak direction during the peak hour. Values in this book are derived by dividing the measured PHV by the sum of both directions of travel during the peak hour.
DAY	Day of week for the peak volume.
DDHV	The directional design hour volume, in vehicles per hour (vph) DDHV=AADTxKxD. See equation (3-1) on page 3-11 of the 2010 Highway Capacity Manual.
DI	Caltrans has twelve transportation districts statewide. This abbreviation identifies the district in which the count station is located.
HR	The ending time for the peak hour volume listed. The volume observed from 1 to 2 would be recorded as 2.

K	The percentage of the AADT in both directions during the peak hour. Values in this table are derived by dividing the measured 2-way PHV by the AADT.
KD	The product of K and D. The percentage of AADT in the peak direction during the peak hour. Values in this table are derived by dividing the measured 1-way PHV by the AADT.
LEG	For traffic counting purposes, a highway intersection or interchange is assigned two legs according to increasing postmiles (route direction) and with a postmile reference at the center of the intersection or interchange. The volume of traffic on each leg is denoted by an A, B or O. A = ahead leg, B = back leg, and O – traffic volume being same for both back and ahead legs.
MNTH	The month that the peak volume occurred.
PHV	Peak Hour Volume in the peak direction. A one way volume in vehicles per hour (vph) as used here. The PHV is analogous to the DDHV as used for design purposes.
PM	The Post Mile is the mileage measured from the county line, or from the beginning of a route. Each postmile along a route in a county is a unique location on the state highway system.
PM Peak	Represents the afternoon peak period for traffic analysis.
PRE	The postmile may have a prefix like R, T, L, M, etc. When a length of highway is changed due to construction or realigment, new postmile values are assigned. To distinguish the new values from the old, an alpha code is prefixed to the new postmile.
RTE	The state highway route number
YR	The year when the count was made. Traffic counting is on a 3-year cycle.

CALTRANS TRAFFIC VOLUMES
LATEST TRAFFIC YEAR SELECTED
PEAK HOUR VOLUME DATA

									AM PEAK							PM PEAK					
DI	RTE	CO	PRE	PM	CS	LEG	YR	Dir	1 WAY PHV	% K	% D	% KD	HR	DAY	MNTH	Dir	1 WAY PHV	% K	% D	% KD	HR	DAY	MNTH
04	780	SOL		3.995	357	A	10	W	3034	8.16	65.67	5.36	7	THU	SEP	E	2729	9.13	52.79	4.82	17	TUE	DEC
04	780	SOL		6.656	341	A	11	E	2822	8.57	56.94	4.88	7	TUE	JAN	W	2821	9.01	54.16	4.88	17	THU	FEB
11	805	SD		.647	922	A	12	S	2493	6.47	68.66	4.44	9	SAT	FEB	S	3019	8.37	64.25	5.38	17	FRI	SEP
11	805	SD		5.542	684	O	12	N	5769	7.09	52.1	3.69	7	FRI	SEP	S	6949	7.87	56.58	4.45	15	THU	OCT
11	805	SD		8.854	924	B	12	N	9338	6.09	67.78	4.13	6	TUE	NOV	S	10764	7.82	60.88	4.76	16	FRI	MAY
11	805	SD		11.10	925	B	12	N	8896	7.11	63.73	4.53	7	THU	MAR	S	9147	7.76	60.09	4.66	16	TUE	FEB
11	805	SD		13.51	926	B	12	N	9922	6.34	73.3	4.65	6	THU	MAY	S	9971	7.79	59.93	4.67	17	THU	JUN
11	805	SD		14.46	966	B	12	S	10495	6.51	74.47	4.85	6	WED	MAY	S	10309	7.93	60.06	4.76	15	MON	MAR
11	805	SD		16.43	927	B	12	N	8348	7.27	67.09	4.88	7	THU	FEB	S	9425	8.52	64.62	5.51	16	WED	MAR
11	805	SD		17.65	928	A	12	N	11108	8.29	69.74	5.78	7	THU	APR	S	11007	8.65	66.27	5.73	16	TUE	MAR
11	805	SD		24.44	683	X	12	N	9161	7.87	61.73	4.86	7	THU	FEB	S	8401	7.6	58.66	4.46	17	WED	FEB
04	880	ALA		2.283	127	A	11	S	7770	7.33	59.51	4.36	8	THU	JUN	N	7769	7.74	56.35	4.36	17	TUE	JUN
04	880	ALA		14.54	909	X	12	S	6796	7.57	50.42	3.82	12	SAT	FEB	N	7199	8.02	50.42	4.04	14	SAT	MAR
04	880	ALA		26.61	129	A	11	N	7133	6.78	50.27	3.41	7	THU	DEC	N	7578	7.13	50.81	3.62	14	FRI	DEC
11	905	SD		3.207	932	A	12	W	2514	9.36	55.04	5.15	7	THU	JAN	E	2447	9.2	54.46	5.01	16	MON	JAN
11	905	SD	R	11.37	126	B	12	W	1149	6.09	62.79	3.82	12	THU	FEB	E	1340	7.48	59.58	4.46	18	FRI	FEB
11	905	SD	R	11.37	127	A	12	W	1119	6.06	76.23	4.62	7	WED	MAY	E	1292	8.5	62.72	5.33	18	FRI	FEB

2012 All Traffic Volumes on CSHS – Traffic Data Branch

District	Route	County	Post Mile	Description	Back Peak Hour	Back Peak Month	Back AADT	Ahead Peak Hour	Ahead Peak Month	Ahead AADT
11	805	SD	0.486	SAN DIEGO, JCT. RTE. 5				3500	47500	
11	805	SD	0.652	SAN DIEGO, SAN YSIDRO BLVD	3500	47500	42000	4750	59000	56000
11	805	SD	1.805	SAN DIEGO, JCT. RTE. 905	4750	59000	56000	7900	103000	102000
11	805	SD	2.897	SAN DIEGO, PALM AVENUE	7900	103000	102000	10200	139000	138000
11	805	SD	3.654	CHULA VISTA, AUTO PARKWAY/MAIN	10200	139000	138000	10200	144000	141000
11	805	SD	4.415	CHULA VISTA, ORANGE AVENUE	10200	144000	141000	12100	155000	151000
11	805	SD	6.059	TELEGRAPH CANYON ROAD	12100	155000	151000	13500	194000	191000
11	805	SD	7.163	CHULA VISTA, H STREET	13500	194000	191000	14500	212000	206000
11	805	SD	7.756	CHULA VISTA, BONITA ROAD	14500	212000	206000	18000	228000	226000
11	805	SD	8.854	JCT. RTE. 54, SWEETWATER ROAD	18000	228000	226000	15800	210000	204000
11	805	SD	10.281	NATIONAL CITY, PLAZA BLVD	15800	210000	204000	15300	200000	196000
11	805	SD	11.096	SAN DIEGO, 47TH STREET	15300	200000	196000	15200	210000	207000
11	805	SD	12.344	SAN DIEGO, IMPERIAL AVENUE	15200	210000	207000	16600	227000	225000
11	805	SD	12.953	SAN DIEGO, MARKET STREET	16600	227000	225000	16700	218000	213000
11	805	SD	13.507	SAN DIEGO, JCT. RTE. 94	16700	218000	213000	16800	220000	214000
11	805	SD	13.95	SAN DIEGO, HOME AVENUE	16800	220000	214000	17000	220000	217000
11	805	SD	14.641	SAN DIEGO, JCT. RTE. 15	17000	220000	217000	13000	172000	167000
11	805	SD	15.95	SAN DIEGO, UNIVERSITY AVENUE	13000	172000	167000	14700	173000	171000
11	805	SD	16.431	EL CAJON BOULEVARD	14700	173000	171000	14400	176000	175000
11	805	SD	16.989	SAN DIEGO, ADAMS AVENUE	14400	176000	175000	16000	195000	193000
11	805	SD	17.645	JCT. RTE. 8	16000	195000	193000	16700	193000	192000
11	805	SD	18.888	MURRAY RIDGE	16700	193000	192000	16000	191000	188000
11	805	SD	20.23	SAN DIEGO, KEARNY VILLA ROAD	16000	191000	188000	14000	170000	166000
11	805	SD	20.6	SAN DIEGO, JCT. RTE. 163	14000	170000	166000	16000	194000	186000
11	805	SD	21.654	SAN DIEGO, BALBOA AVENUE	16000	194000	186000	15400	187000	184000
11	805	SD	22.561	SAN DIEGO, CLAIREMONT MESA DR	15400	187000	184000	14300	182000	179000
11	805	SD	23.651	JCT. RTE. 52	14300	182000	179000	15600	209000	198000
11	805	SD	24.44	GOVERNOR DRIVE	15600	209000	198000	15200	204000	194000
11	805	SD	25.476	SAN DIEGO, NOBEL DRIVE	15200	204000	194000	13900	186000	174000
11	805	SD	25.935	SAN DIEGO, MIRAMAR ROAD	13900	186000	174000	13700	184000	173000
11	805	SD	27.067	SAN DIEGO, MIRA MESA BLVD	13700	184000	173000	12300	155000	151000
11	805	SD	28.502	JCT. RTE. 5	12300	155000	151000			

Copyright © 2013, State of California, Department of Transportation, Traffic Operations Division

2012

Annual Average Daily Truck Traffic on the California State Highway System

Compiled by
Traffic Data Branch

State of California
The Transportation Agency
Department of Transportation

Prepared in cooperation with the
U.S. Department of Transportation
Federal Highway Administration

RTE	DIST	CNTY	POST MILE	LEG	DESCRIPTION	VEHICLE AADT TOTAL	TRUCK AADT TOTAL	TRUCK % TOT VEH	TRUCK AADT TOTAL By Axle 2	3	4	5+	% TRUCK AADT By Axle 2	3	4	5+	EAL 2-WAY (1000)	YEAR VER/ EST
805	11	SD	.486	A	SAN DIEGO, JCT. RTE. 5	42000	1722	4.1	944	338	24	417	54.8	19.6	1.4	24.2	212	86E
805	11	SD	1.805	B	SAN DIEGO, JCT. RTE. 905	56000	2240	4	1228	439	31	542	54.8	19.6	1.4	24.2	275	86V
805	11	SD	1.805	A	SAN DIEGO, JCT. RTE. 905	102000	7038	6.9	3690	615	205	2528	52.43	8.74	2.91	35.92	1088	03E
805	11	SD	3.654	B	CHULA VISTA, AUTO PARKWAY DRIVE/MAIN STREET	138000	9660	7	5065	844	281	3470	52.43	8.74	2.91	35.92	1493	03E
805	11	SD	3.654	A	CHULA VISTA, AUTO PARKWAY DRIVE/MAIN STREET	141000	9870	7	5175	863	287	3545	52.43	8.74	2.91	35.92	1526	03E
805	11	SD	5.542	O	NAPLE STREET UNDERCROSSING	156000	8408	5.39	3533	699	221	3955	42.02	8.31	2.63	47.04	1585	12V
805	11	SD	6.059	B	TELEGRAPH CANYON ROAD	151000	11053	7.32	5623	979	286	4165	50.87	8.86	2.59	37.68	1766	04V
805	11	SD	8.854	B	JCT. RTE. 54, SWEETWATER ROAD	226000	13560	6	6898	1201	351	5109	50.87	8.86	2.59	37.68	2166	04V
805	11	SD	14.641	B	SAN DIEGO, JCT. RTE. 15	217000	13020	6	6623	1154	337	4906	50.87	8.86	2.59	37.68	2080	04E
805	11	SD	14.641	A	SAN DIEGO, JCT. RTE. 15	167000	10855	6.5	6119	1006	377	3353	56.37	9.27	3.47	30.89	1519	04E
805	11	SD	17.645	B	JCT. RTE. 8	193000	12545	6.5	7072	1163	435	3875	56.37	9.27	3.47	30.89	1755	04E
805	11	SD	17.645	A	JCT. RTE. 8	192000	11904	6.2	6710	1104	413	3677	56.37	9.27	3.47	30.89	1666	04E
805	11	SD	20.6	B	SAN DIEGO, JCT. RTE. 163	166000	10790	6.5	6082	1000	374	3333	56.37	9.27	3.47	30.89	1510	04E
805	11	SD	20.6	A	SAN DIEGO, JCT. RTE. 163	186000	12090	6.5	6815	1121	420	3735	56.37	9.27	3.47	30.89	1692	04E
805	11	SD	23.651	B	JCT. RTE. 52	179000	12244	6.84	6902	1135	425	3782	56.37	9.27	3.47	30.89	1713	04V
805	11	SD	23.651	A	JCT. RTE. 52	198000	10969	5.54	6027	1014	353	3576	54.95	9.24	3.22	32.6	1590	07E

APPENDIX D

TRAFFIC COUNT DATA

-INTERSECTIONS-

True Count
4401 Twain Ave, Suite 27
San Diego, CA 92120

File Name : 1164.04.FRIARS RD WB RAMPS.MISSION CENTER RD
Site Code : 00000000
Start Date : 6/8/2011
Page No : 1

Groups Printed- Vehicles

	MISSION CENTER RD Southbound				FRIARS RD EB RAMP Westbound				MISSION CENTER RD Northbound				FRIARS RD EB RAMP Eastbound				
Start Time	Left	Thru	Right	Peds	Left	Thru	Right	Peds	Left	Thru	Right	Peds	Left	Thru	Right	Peds	Int. Total
07:00	0	34	25	0	15	0	38	0	11	60	0	0	0	0	0	0	183
07:15	0	44	27	0	12	0	49	0	28	99	0	0	0	0	0	0	259
07:30	0	60	33	0	22	0	48	0	18	95	0	0	0	0	0	0	276
07:45	0	64	39	0	39	0	69	0	32	116	0	0	0	0	0	0	359
Total	0	202	124	0	88	0	204	0	89	370	0	0	0	0	0	0	1077
08:00	0	62	36	0	30	0	70	0	29	106	0	0	0	0	0	0	333
08:15	0	74	30	0	41	0	59	0	43	106	0	0	0	0	0	0	353
08:30	0	67	35	0	28	0	62	0	39	83	0	0	0	0	0	0	314
08:45	0	57	24	0	23	0	68	0	29	81	0	0	0	0	0	0	282
Total	0	260	125	0	122	0	259	0	140	376	0	0	0	0	0	0	1282
*** BREAK ***																	
16:00	0	165	40	0	26	0	56	0	81	98	0	0	0	0	0	0	466
16:15	0	159	44	0	27	0	50	0	57	111	0	0	0	0	0	0	448
16:30	0	211	49	0	34	0	63	0	61	109	0	0	0	0	0	0	527
16:45	0	203	45	0	44	0	60	0	43	115	0	0	0	0	0	0	510
Total	0	738	178	0	131	0	229	0	242	433	0	0	0	0	0	0	1951
17:00	0	212	44	0	33	0	65	0	70	125	0	0	0	0	0	0	549
17:15	0	217	49	0	37	0	77	0	44	128	0	0	0	0	0	0	552
17:30	0	177	53	0	40	0	68	0	60	127	0	0	0	0	0	0	525
17:45	0	152	30	0	47	0	69	0	49	140	0	0	0	0	0	0	487
Total	0	758	176	0	157	0	279	0	223	520	0	0	0	0	0	0	2113
Grand Total	0	1958	603	0	498	0	971	0	694	1699	0	0	0	0	0	0	6423
Apprch %	0	76.5	23.5	0	33.9	0	66.1	0	29	71	0	0	0	0	0	0	
Total %	0	30.5	9.4	0	7.8	0	15.1	0	10.8	26.5	0	0	0	0	0	0	

True Count
4401 Twain Ave, Suite 27
San Diego, CA 92120

File Name : 1164.04.FRIARS RD WB RAMPS.MISSION CENTER RD
Site Code : 00000000
Start Date : 6/8/2011
Page No : 2

	MISSION CENTER RD Southbound					FRIARS RD EB RAMP Westbound					MISSION CENTER RD Northbound					FRIARS RD EB RAMP Eastbound					
Start Time	Left	Thru	Right	Peds	App. Total	Left	Thru	Right	Peds	App. Total	Left	Thru	Right	Peds	App. Total	Left	Thru	Right	Peds	App. Total	Int. Total
Peak Hour Analysis From 07:00 to 11:45 - Peak 1 of 1																					
Peak Hour for Entire Intersection Begins at 07:45																					
07:45	0	64	**39**	0	103	39	0	69	0	**108**	32	**116**	0	0	148	0	0	0	0	0	**359**
08:00	0	62	36	0	98	30	0	**70**	0	100	29	106	0	0	135	0	0	0	0	0	333
08:15	0	**74**	30	0	**104**	**41**	0	59	0	100	**43**	106	0	0	**149**	0	0	0	0	0	353
08:30	0	67	35	0	102	28	0	62	0	90	39	83	0	0	122	0	0	0	0	0	314
Total Volume	0	267	140	0	407	138	0	260	0	398	143	411	0	0	554	0	0	0	0	0	1359
% App. Total	0	65.6	34.4	0		34.7	0	65.3	0		25.8	74.2	0	0		0	0	0	0		
PHF	.000	.902	.897	.000	.978	.841	.000	.929	.000	.921	.831	.886	.000	.000	.930	.000	.000	.000	.000	.000	.946

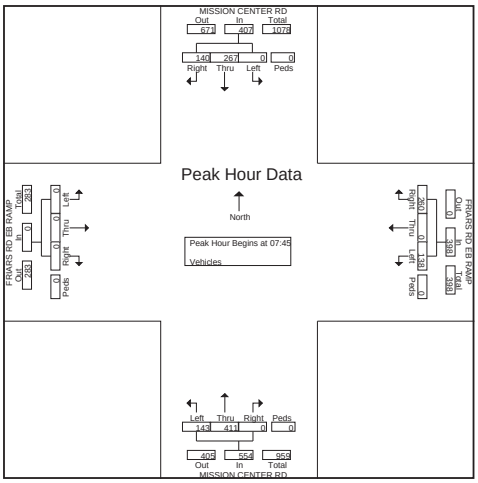

True Count
4401 Twain Ave, Suite 27
San Diego, CA 92120

File Name : 1164.04.FRIARS RD WB RAMPS.MISSION CENTER RD
Site Code : 00000000
Start Date : 6/8/2011
Page No : 3

	MISSION CENTER RD Southbound					FRIARS RD EB RAMP Westbound					MISSION CENTER RD Northbound					FRIARS RD EB RAMP Eastbound					
Start Time	Left	Thru	Right	Peds	App. Total	Left	Thru	Right	Peds	App. Total	Left	Thru	Right	Peds	App. Total	Left	Thru	Right	Peds	App. Total	Int. Total
Peak Hour Analysis From 12:00 to 17:45 - Peak 1 of 1																					
Peak Hour for Entire Intersection Begins at 16:30																					
16:30	0	211	**49**	0	260	34	0	63	0	97	61	109	0	0	170	0	0	0	0	0	527
16:45	0	203	45	0	248	**44**	0	60	0	104	43	115	0	0	158	0	0	0	0	0	510
17:00	0	212	44	0	256	33	0	65	0	98	**70**	125	0	0	**195**	0	0	0	0	0	549
17:15	0	**217**	49	0	**266**	37	0	**77**	0	**114**	44	**128**	0	0	172	0	0	0	0	0	**552**
Total Volume	0	843	187	0	1030	148	0	265	0	413	218	477	0	0	695	0	0	0	0	0	2138
% App. Total	0	81.8	18.2	0		35.8	0	64.2	0		31.4	68.6	0	0		0	0	0	0		
PHF	.000	.971	.954	.000	.968	.841	.000	.860	.000	.906	.779	.932	.000	.000	.891	.000	.000	.000	.000	.000	.968

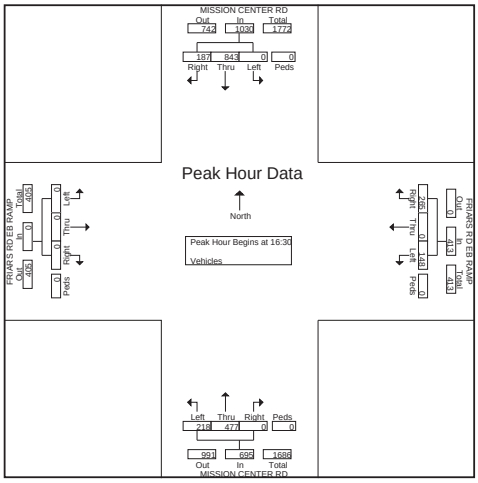

True Count
4401 Twain Ave, Suite 27
San Diego, CA 92120

File Name : 1164.05.FRIARS RD EB RAMPS.MISSION CENTER RD
Site Code : 00000000
Start Date : 6/8/2011
Page No : 1

Groups Printed- Vehicles

	MISSION CENTER RD Southbound				FRIARS RD EB RAMPS Westbound				MISSION CENTER RD Northbound				FRIARS RD EB RAMPS Eastbound				
Start Time	Left	Thru	Right	Peds	Left	Thru	Right	Peds	Left	Thru	Right	Peds	Left	Thru	Right	Peds	Int. Total
07:00	10	40	0	0	0	0	0	0	0	71	2	0	29	0	17	0	169
07:15	14	43	0	0	0	0	0	0	0	90	5	0	40	1	20	0	213
07:30	28	81	0	0	0	0	0	0	0	113	7	0	38	1	41	0	309
07:45	26	78	0	0	0	0	0	0	0	115	10	0	59	0	46	0	334
Total	78	242	0	0	0	0	0	0	0	389	24	0	166	2	124	0	1025
08:00	20	62	0	0	0	0	0	0	0	102	3	0	28	0	32	0	247
08:15	25	90	0	0	0	0	0	0	0	98	9	0	40	0	54	0	316
08:30	19	71	0	0	0	0	0	0	0	110	5	0	25	1	42	0	273
08:45	17	65	0	0	0	0	0	0	0	101	2	0	36	0	53	0	274
Total	81	288	0	0	0	0	0	0	0	411	19	0	129	1	181	0	1110
*** BREAK ***																	
16:00	91	132	0	1	0	0	0	0	0	118	19	0	36	2	71	8	478
16:15	76	134	0	0	0	0	0	0	0	145	13	0	24	2	74	0	468
16:30	90	142	0	0	0	0	0	0	0	119	15	0	40	2	88	0	496
16:45	104	137	0	0	0	0	0	0	0	121	12	0	45	1	57	0	477
Total	361	545	0	1	0	0	0	0	0	503	59	0	145	7	290	8	1919
17:00	100	135	0	0	0	0	0	0	0	156	37	0	44	2	82	0	556
17:15	115	138	0	0	0	0	0	0	0	134	24	0	49	0	65	0	525
17:30	74	148	0	0	0	0	0	0	0	151	17	0	58	0	76	0	524
17:45	65	119	1	0	0	0	0	0	0	133	11	0	26	1	80	0	436
Total	354	540	1	0	0	0	0	0	0	574	89	0	177	3	303	0	2041
Grand Total	874	1615	1	1	0	0	0	0	0	1877	191	0	617	13	898	8	6095
Apprch %	35.1	64.8	0	0	0	0	0	0	0	90.8	9.2	0	40.2	0.8	58.5	0.5	
Total %	14.3	26.5	0	0	0	0	0	0	0	30.8	3.1	0	10.1	0.2	14.7	0.1	

True Count
4401 Twain Ave, Suite 27
San Diego, CA 92120

File Name : 1164.05.FRIARS RD EB RAMPS.MISSION CENTER RD
Site Code : 00000000
Start Date : 6/8/2011
Page No : 2

	MISSION CENTER RD Southbound					FRIARS RD EB RAMPS Westbound					MISSION CENTER RD Northbound					FRIARS RD EB RAMPS Eastbound					
Start Time	Left	Thru	Right	Peds	App. Total	Left	Thru	Right	Peds	App. Total	Left	Thru	Right	Peds	App. Total	Left	Thru	Right	Peds	App. Total	Int. Total
Peak Hour Analysis From 07:00 to 11:45 - Peak 1 of 1																					
Peak Hour for Entire Intersection Begins at 07:30																					
07:30	**28**	81	0	0	109	0	0	0	0	0	0	113	7	0	120	38	**1**	41	0	80	309
07:45	26	78	0	0	104	0	0	0	0	0	0	**115**	**10**	0	**125**	**59**	0	46	0	**105**	**334**
08:00	20	62	0	0	82	0	0	0	0	0	0	102	3	0	105	28	0	32	0	60	247
08:15	25	**90**	0	0	**115**	0	0	0	0	0	0	98	9	0	107	40	0	**54**	0	94	316
Total Volume	99	311	0	0	410	0	0	0	0	0	0	428	29	0	457	165	1	173	0	339	1206
% App. Total	24.1	75.9	0	0		0	0	0	0		0	93.7	6.3	0		48.7	0.3	51	0		
PHF	.884	.864	.000	.000	.891	.000	.000	.000	.000	.000	.000	.930	.725	.000	.914	.699	.250	.801	.000	.807	.903

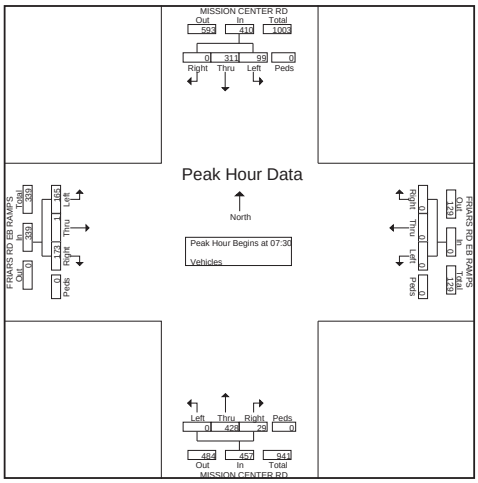

True Count
4401 Twain Ave, Suite 27
San Diego, CA 92120

File Name : 1164.05.FRIARS RD EB RAMPS.MISSION CENTER RD
Site Code : 00000000
Start Date : 6/8/2011
Page No : 3

	MISSION CENTER RD Southbound					FRIARS RD EB RAMPS Westbound					MISSION CENTER RD Northbound					FRIARS RD EB RAMPS Eastbound					
Start Time	Left	Thru	Right	Peds	App. Total	Left	Thru	Right	Peds	App. Total	Left	Thru	Right	Peds	App. Total	Left	Thru	Right	Peds	App. Total	Int. Total
Peak Hour Analysis From 12:00 to 17:45 - Peak 1 of 1																					
Peak Hour for Entire Intersection Begins at 16:45																					
16:45	104	137	0	0	241	0	0	0	0	0	0	121	12	0	133	45	1	57	0	103	477
17:00	100	135	0	0	235	0	0	0	0	0	0	**156**	**37**	0	**193**	44	**2**	**82**	0	128	**556**
17:15	**115**	138	0	0	**253**	0	0	0	0	0	0	134	24	0	158	49	0	65	0	114	525
17:30	74	**148**	0	0	222	0	0	0	0	0	0	151	17	0	168	**58**	0	76	0	**134**	524
Total	393	558	0	0	951	0	0	0	0	0	0	562	90	0	652	196	3	280	0	479	2082
Volume % App. Total	41.3	58.7	0	0		0	0	0	0		0	86.2	13.8	0		40.9	0.6	58.5	0		
PHF	.854	.943	.000	.000	.940	.000	.000	.000	.000	.000	.000	.901	.608	.000	.845	.845	.375	.854	.000	.894	.936

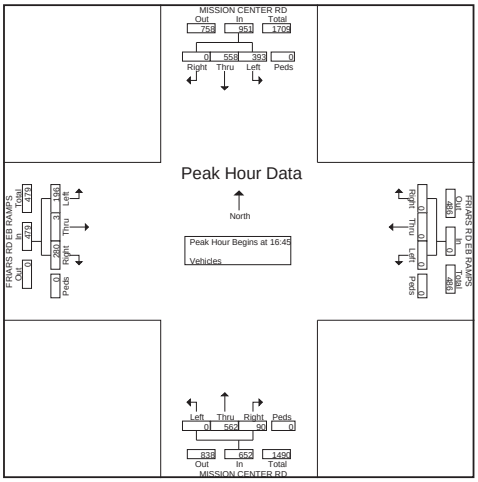

True Count
4401 Twain Ave, Suite 27
San Diego, CA 92120

File Name : 1164.06.FRIARS RD.GILL VILLAGE WAY
Site Code : 00000000
Start Date : 6/8/2011
Page No : 1

Groups Printed- Vehicles

	GILL VILLAGE WAY Southbound				FRIARS RD Westbound				GILL VILLAGE WAY Northbound				FRIARS RD Eastbound				
Start Time	Left	Thru	Right	Peds	Left	Thru	Right	Peds	Left	Thru	Right	Peds	Left	Thru	Right	Peds	Int. Total
07:00	0	0	0	0	0	226	0	0	0	0	16	0	0	93	14	0	349
07:15	0	0	0	0	0	304	0	0	0	0	31	0	0	129	13	0	477
07:30	0	0	0	0	0	314	0	0	0	0	23	0	0	142	25	0	504
07:45	0	0	0	0	0	384	0	0	0	0	25	0	0	166	22	0	597
Total	0	0	0	0	0	1228	0	0	0	0	95	0	0	530	74	0	1927
08:00	0	0	0	0	0	349	0	0	0	0	18	0	0	183	29	0	579
08:15	0	0	0	0	0	370	0	0	0	0	25	0	0	198	41	0	634
08:30	0	0	0	0	0	346	0	0	0	0	26	0	0	164	30	0	566
08:45	0	0	0	0	0	288	0	0	0	0	14	0	0	166	38	0	506
Total	0	0	0	0	0	1353	0	0	0	0	83	0	0	711	138	0	2285
*** BREAK ***																	
16:00	0	0	0	1	0	290	0	0	0	0	33	0	0	363	85	0	772
16:15	0	0	0	0	0	331	0	0	0	0	34	0	0	380	100	0	845
16:30	0	0	0	0	0	354	0	0	0	0	39	0	0	384	128	0	905
16:45	0	0	0	0	0	409	0	0	0	0	38	0	0	393	114	0	954
Total	0	0	0	1	0	1384	0	0	0	0	144	0	0	1520	427	0	3476
17:00	0	0	0	0	0	419	0	0	0	0	36	0	0	443	161	0	1059
17:15	0	0	0	0	0	500	0	0	0	0	42	0	0	473	136	0	1151
17:30	0	0	0	0	0	427	0	0	0	0	40	0	0	432	112	0	1011
17:45	0	0	0	0	0	376	0	0	0	0	34	0	0	401	132	0	943
Total	0	0	0	0	0	1722	0	0	0	0	152	0	0	1749	541	0	4164
Grand Total	0	0	0	1	0	5687	0	0	0	0	474	0	0	4510	1180	0	11852
Apprch %	0	0	0	100	0	100	0	0	0	0	100	0	0	79.3	20.7	0	
Total %	0	0	0	0	0	48	0	0	0	0	4	0	0	38.1	10	0	

True Count
4401 Twain Ave, Suite 27
San Diego, CA 92120

File Name : 1164.06.FRIARS RD.GILL VILLAGE WAY
Site Code : 00000000
Start Date : 6/8/2011
Page No : 2

	GILL VILLAGE WAY Southbound					FRIARS RD Westbound					GILL VILLAGE WAY Northbound					FRIARS RD Eastbound					
Start Time	Left	Thru	Right	Peds	App. Total	Left	Thru	Right	Peds	App. Total	Left	Thru	Right	Peds	App. Total	Left	Thru	Right	Peds	App. Total	Int. Total
Peak Hour Analysis From 07:00 to 11:45 - Peak 1 of 1																					
Peak Hour for Entire Intersection Begins at 07:45																					
07:45	0	0	0	0	0	0	384	0	0	384	0	0	25	0	25	0	166	22	0	188	597
08:00	0	0	0	0	0	0	349	0	0	349	0	0	18	0	18	0	183	29	0	212	579
08:15	0	0	0	0	0	0	370	0	0	370	0	0	25	0	25	0	198	41	0	239	634
08:30	0	0	0	0	0	0	346	0	0	346	0	0	26	0	26	0	164	30	0	194	566
Total Volume	0	0	0	0	0	0	1449	0	0	1449	0	0	94	0	94	0	711	122	0	833	2376
% App. Total	0	0	0	0		0	100	0	0		0	0	100	0		0	85.4	14.6	0		
PHF	.000	.000	.000	.000	.000	.000	.943	.000	.000	.943	.000	.000	.904	.000	.904	.000	.898	.744	.000	.871	.937

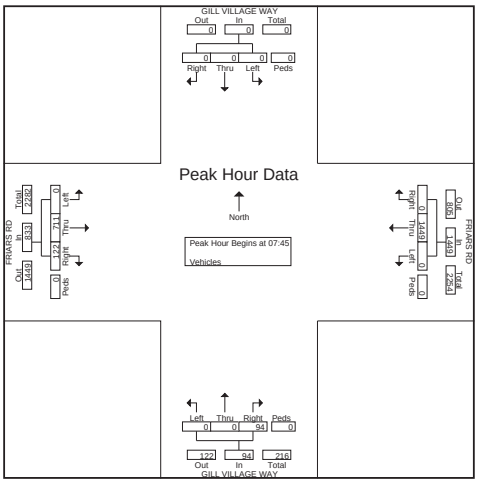

True Count
4401 Twain Ave, Suite 27
San Diego, CA 92120

File Name : 1164.06.FRIARS RD.GILL VILLAGE WAY
Site Code : 00000000
Start Date : 6/8/2011
Page No : 3

	GILL VILLAGE WAY Southbound					FRIARS RD Westbound					GILL VILLAGE WAY Northbound					FRIARS RD Eastbound					
Start Time	Left	Thru	Right	Peds	App. Total	Left	Thru	Right	Peds	App. Total	Left	Thru	Right	Peds	App. Total	Left	Thru	Right	Peds	App. Total	Int. Total
Peak Hour Analysis From 12:00 to 17:45 - Peak 1 of 1																					
Peak Hour for Entire Intersection Begins at 16:45																					
16:45	0	0	0	0	0	0	409	0	0	409	0	0	38	0	38	0	393	114	0	507	954
17:00	0	0	0	0	0	0	419	0	0	419	0	0	36	0	36	0	443	161	0	604	1059
17:15	0	0	0	0	0	0	500	0	0	500	0	0	42	0	42	0	473	136	0	609	1151
17:30	0	0	0	0	0	0	427	0	0	427	0	0	40	0	40	0	432	112	0	544	1011
Total Volume	0	0	0	0	0	0	1755	0	0	1755	0	0	156	0	156	0	1741	523	0	2264	4175
% App. Total	0	0	0	0		0	100	0	0		0	0	100	0		0	76.9	23.1	0		
PHF	.000	.000	.000	.000	.000	.000	.878	.000	.000	.878	.000	.000	.929	.000	.929	.000	.920	.812	.000	.929	.907

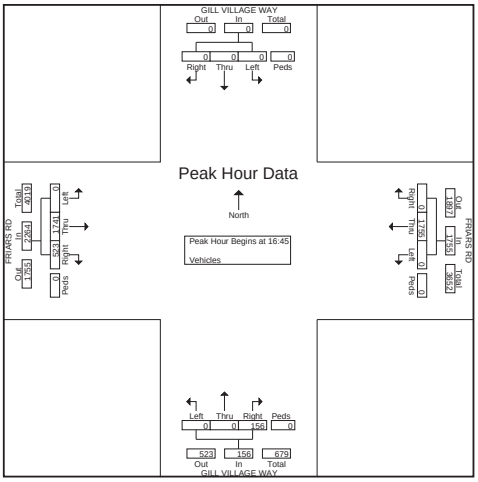

True Count
4401 Twain Ave, Suite 27
San Diego, CA 92120

File Name : 1164.07.FRIARS RD WB RAMPS.QUALCOMM WAY
Site Code : 00000000
Start Date : 6/8/2011
Page No : 1

Groups Printed- Vehicles

	DRIVEWAY Southbound				FRIARS RD WB RAMPS Westbound				QUALCOMM WAY Northbound				FRIARS RD WB RAMPS Eastbound				
Start Time	Left	Thru	Right	Peds	Left	Thru	Right	Peds	Left	Thru	Right	Peds	Left	Thru	Right	Peds	Int. Total
07:00	0	4	1	0	23	0	0	0	53	4	0	0	0	0	0	0	85
07:15	0	7	3	0	31	0	3	0	77	8	0	0	0	0	0	0	129
07:30	0	6	3	0	31	0	5	0	75	8	0	0	0	0	0	0	128
07:45	0	17	3	0	48	0	2	0	67	5	0	0	0	0	0	0	142
Total	0	34	10	0	133	0	10	0	272	25	0	0	0	0	0	0	484
08:00	0	4	2	0	40	0	0	0	68	7	0	0	0	0	0	0	121
08:15	0	4	2	0	41	0	1	0	78	2	0	0	0	0	0	0	128
08:30	0	2	1	0	41	0	2	0	85	3	0	0	0	0	0	0	134
08:45	0	3	2	0	45	1	5	0	80	4	0	0	0	0	0	0	140
Total	0	13	7	0	167	1	8	0	311	16	0	0	0	0	0	0	523
*** BREAK ***																	
16:00	0	4	6	1	72	0	0	0	84	4	0	0	0	0	0	0	171
16:15	0	6	3	0	76	1	0	0	83	6	0	0	0	0	0	0	175
16:30	0	4	3	0	90	1	0	0	101	0	0	0	0	0	0	0	199
16:45	0	1	1	0	64	0	0	0	91	1	0	0	0	0	0	0	158
Total	0	15	13	1	302	2	0	0	359	11	0	0	0	0	0	0	703
17:00	0	5	4	0	91	1	0	0	113	1	0	0	0	0	0	0	215
17:15	0	3	1	0	91	3	0	0	116	3	0	0	0	0	0	0	217
17:30	0	0	1	0	63	5	0	0	104	4	0	0	0	0	0	0	177
17:45	0	6	0	0	66	2	0	0	91	5	0	0	0	0	0	0	170
Total	0	14	6	0	311	11	0	0	424	13	0	0	0	0	0	0	779
Grand Total	0	76	36	1	913	14	18	0	1366	65	0	0	0	0	0	0	2489
Apprch %	0	67.3	31.9	0.9	96.6	1.5	1.9	0	95.5	4.5	0	0	0	0	0	0	
Total %	0	3.1	1.4	0	36.7	0.6	0.7	0	54.9	2.6	0	0	0	0	0	0	

True Count
4401 Twain Ave, Suite 27
San Diego, CA 92120

File Name : 1164.07.FRIARS RD WB RAMPS.QUALCOMM WAY
Site Code : 00000000
Start Date : 6/8/2011
Page No : 2

	DRIVEWAY Southbound					FRIARS RD WB RAMPS Westbound					QUALCOMM WAY Northbound					FRIARS RD WB RAMPS Eastbound					
Start Time	Left	Thru	Right	Peds	App. Total	Left	Thru	Right	Peds	App. Total	Left	Thru	Right	Peds	App. Total	Left	Thru	Right	Peds	App. Total	Int. Total
Peak Hour Analysis From 07:00 to 11:45 - Peak 1 of 1																					
Peak Hour for Entire Intersection Begins at 07:45																					
07:45	0	**17**	**3**	0	**20**	**48**	0	**2**	0	**50**	67	5	0	0	72	0	0	0	0	0	**142**
08:00	0	4	2	0	6	40	0	0	0	40	68	**7**	0	0	75	0	0	0	0	0	121
08:15	0	4	2	0	6	41	0	1	0	42	78	2	0	0	80	0	0	0	0	0	128
08:30	0	2	1	0	3	41	0	2	0	43	**85**	3	0	0	**88**	0	0	0	0	0	134
Total Volume	0	27	8	0	35	170	0	5	0	175	298	17	0	0	315	0	0	0	0	0	525
% App. Total	0	77.1	22.9	0		97.1	0	2.9	0		94.6	5.4	0	0		0	0	0	0		
PHF	.000	.397	.667	.000	.438	.885	.000	.625	.000	.875	.876	.607	.000	.000	.895	.000	.000	.000	.000	.000	.924

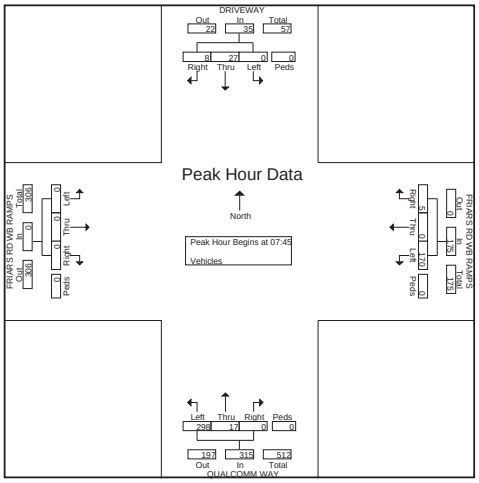

True Count
4401 Twain Ave, Suite 27
San Diego, CA 92120

File Name : 1164.07.FRIARS RD WB RAMPS.QUALCOMM WAY
Site Code : 00000000
Start Date : 6/8/2011
Page No : 3

	DRIVEWAY Southbound					FRIARS RD WB RAMPS Westbound					QUALCOMM WAY Northbound					FRIARS RD WB RAMPS Eastbound					
Start Time	Left	Thru	Right	Peds	App. Total	Left	Thru	Right	Peds	App. Total	Left	Thru	Right	Peds	App. Total	Left	Thru	Right	Peds	App. Total	Int. Total
Peak Hour Analysis From 12:00 to 17:45 - Peak 1 of 1																					
Peak Hour for Entire Intersection Begins at 16:30																					
16:30	0	4	3	0	7	90	1	0	0	91	101	0	0	0	101	0	0	0	0	0	199
16:45	0	1	1	0	2	64	0	0	0	64	91	1	0	0	92	0	0	0	0	0	158
17:00	0	**5**	**4**	0	**9**	**91**	1	0	0	92	113	1	0	0	114	0	0	0	0	0	215
17:15	0	3	1	0	4	91	**3**	0	0	**94**	**116**	**3**	0	0	**119**	0	0	0	0	0	**217**
Total Volume	0	13	9	0	22	336	5	0	0	341	421	5	0	0	426	0	0	0	0	0	789
% App. Total	0	59.1	40.9	0		98.5	1.5	0	0		98.8	1.2	0	0		0	0	0	0		
PHF	.000	.650	.563	.000	.611	.923	.417	.000	.000	.907	.907	.417	.000	.000	.895	.000	.000	.000	.000	.000	.909

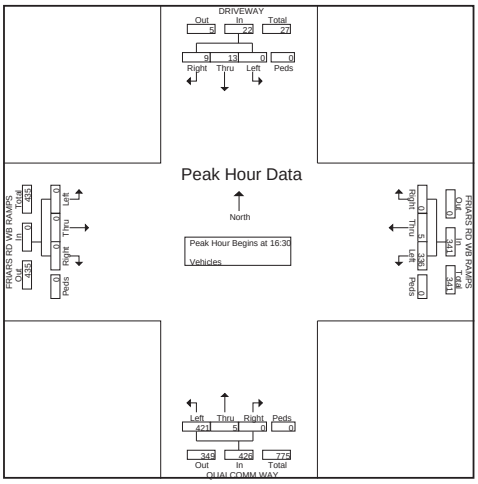

True Count

4401 Twain Ave, Suite 27
San Diego, CA 92120

File Name : 1164.08.FRIARS RD EB RAMPS.QUALCOMM WAY
Site Code : 00000000
Start Date : 6/8/2011
Page No : 1

Groups Printed- Vehicles

	QUALCOMM WAY Southbound				FRIARS RD EB RAMPS Westbound				QUALCOMM WAY Northbound				FRIARS RD EB RAMPS Eastbound				
Start Time	Left	Thru	Right	Peds	Left	Thru	Right	Peds	Left	Thru	Right	Peds	Left	Thru	Right	Peds	Int. Total
07:00	2	26	0	1	0	0	0	0	0	44	24	0	12	0	16	0	125
07:15	2	36	0	0	0	0	0	0	0	62	29	0	23	0	20	0	172
07:30	3	35	0	0	0	0	0	0	0	75	30	0	10	0	31	0	184
07:45	8	55	0	0	0	0	0	0	0	60	47	0	12	0	33	0	215
Total	15	152	0	1	0	0	0	0	0	241	130	0	57	0	100	0	696
08:00	1	45	0	0	0	0	0	0	0	60	45	0	12	0	29	0	192
08:15	1	47	0	0	0	0	0	0	0	69	39	0	11	0	35	0	202
08:30	0	41	0	0	0	0	0	0	0	68	49	0	15	0	23	0	196
08:45	2	46	0	0	0	0	0	0	0	76	37	0	10	1	14	0	186
Total	4	179	0	0	0	0	0	0	0	273	170	0	48	1	101	0	776
*** BREAK ***																	
16:00	5	67	0	1	0	0	0	0	0	73	76	0	15	2	31	0	270
16:15	4	71	0	0	0	0	0	0	0	73	78	0	9	2	51	0	288
16:30	2	96	0	0	0	0	0	0	0	88	83	0	6	0	42	0	317
16:45	5	56	0	0	0	0	0	0	0	87	97	0	9	0	44	0	298
Total	16	290	0	1	0	0	0	0	0	321	334	0	39	4	168	0	1173
17:00	5	95	0	0	0	0	0	0	0	109	89	0	2	3	48	0	351
17:15	3	83	0	0	0	0	0	0	0	103	77	0	9	1	52	0	328
17:30	4	76	0	0	0	0	0	0	0	95	107	0	13	0	57	0	352
17:45	7	73	0	0	0	0	0	0	0	89	86	0	6	0	46	0	307
Total	19	327	0	0	0	0	0	0	0	396	359	0	30	4	203	0	1338
Grand Total	54	948	0	2	0	0	0	0	0	1231	993	0	174	9	572	0	3983
Apprch %	5.4	94.4	0	0.2	0	0	0	0	0	55.4	44.6	0	23	1.2	75.8	0	
Total %	1.4	23.8	0	0.1	0	0	0	0	0	30.9	24.9	0	4.4	0.2	14.4	0	

True Count

4401 Twain Ave, Suite 27
San Diego, CA 92120

File Name : 1164.08.FRIARS RD EB RAMPS.QUALCOMM WAY
Site Code : 00000000
Start Date : 6/8/2011
Page No : 2

	QUALCOMM WAY Southbound					FRIARS RD EB RAMPS Westbound					QUALCOMM WAY Northbound					FRIARS RD EB RAMPS Eastbound					
Start Time	Left	Thru	Right	Peds	App. Total	Left	Thru	Right	Peds	App. Total	Left	Thru	Right	Peds	App. Total	Left	Thru	Right	Peds	App. Total	Int. Total
Peak Hour Analysis From 07:00 to 11:45 - Peak 1 of 1																					
Peak Hour for Entire Intersection Begins at 07:45																					
07:45	**8**	**55**	0	0	**63**	0	0	0	0	0	0	60	47	0	107	12	0	33	0	45	**215**
08:00	1	45	0	0	46	0	0	0	0	0	0	60	45	0	105	12	0	29	0	41	192
08:15	1	47	0	0	48	0	0	0	0	0	0	**69**	39	0	108	11	0	**35**	0	**46**	202
08:30	0	41	0	0	41	0	0	0	0	0	0	68	**49**	0	**117**	**15**	0	23	0	38	196
Total Volume	10	188	0	0	198	0	0	0	0	0	0	257	180	0	437	50	0	120	0	170	805
% App. Total	5.1	94.9	0	0		0	0	0	0		0	58.8	41.2	0		29.4	0	70.6	0		
PHF	.313	.855	.000	.000	.786	.000	.000	.000	.000	.000	.000	.931	.918	.000	.934	.833	.000	.857	.000	.924	.936

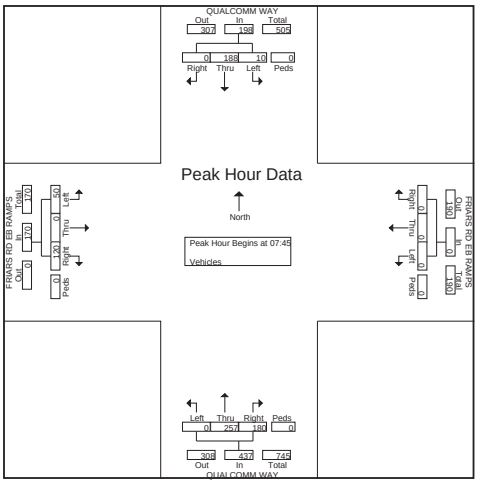

True Count

4401 Twain Ave, Suite 27
San Diego, CA 92120

File Name : 1164.08.FRIARS RD EB RAMPS.QUALCOMM WAY
Site Code : 00000000
Start Date : 6/8/2011
Page No : 3

	QUALCOMM WAY Southbound					FRIARS RD EB RAMPS Westbound					QUALCOMM WAY Northbound					FRIARS RD EB RAMPS Eastbound					
Start Time	Left	Thru	Right	Peds	App. Total	Left	Thru	Right	Peds	App. Total	Left	Thru	Right	Peds	App. Total	Left	Thru	Right	Peds	App. Total	Int. Total
Peak Hour Analysis From 12:00 to 17:45 - Peak 1 of 1																					
Peak Hour for Entire Intersection Begins at 17:00																					
17:00	5	**95**	0	0	**100**	0	0	0	0	0	0	**109**	89	0	198	2	**3**	48	0	53	351
17:15	3	83	0	0	86	0	0	0	0	0	0	103	77	0	180	9	1	52	0	62	328
17:30	4	76	0	0	80	0	0	0	0	0	0	95	**107**	0	**202**	**13**	0	**57**	0	**70**	**352**
17:45	**7**	73	0	0	80	0	0	0	0	0	0	89	86	0	175	6	0	46	0	52	307
Total Volume	19	327	0	0	346	0	0	0	0	0	0	396	359	0	755	30	4	203	0	237	1338
% App. Total	5.5	94.5	0	0		0	0	0	0		0	52.5	47.5	0		12.7	1.7	85.7	0		
PHF	.679	.861	.000	.000	.865	.000	.000	.000	.000	.000	.000	.908	.839	.000	.934	.577	.333	.890	.000	.846	.950

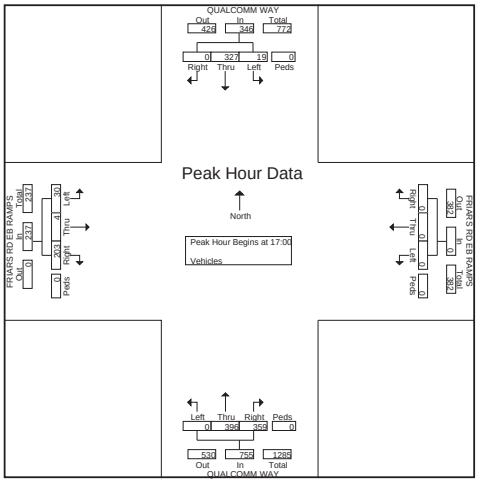

True Count

4401 Twain Ave, Suite 27
San Diego, CA 92120

File Name : 1164.09.FRIARS RD.RIO BONITO WAY
Site Code : 00000000
Start Date : 6/8/2011
Page No : 1

Groups Printed- Vehicles

	Southbound				FRIARS RD Westbound				RIO BONITO WAY Northbound				FRIARS RD Eastbound				
Start Time	Left	Thru	Right	Peds	Left	Thru	Right	Peds	Left	Thru	Right	Peds	Left	Thru	Right	Peds	Int. Total
07:00	0	0	0	0	0	210	0	0	0	0	7	0	0	86	20	0	323
07:15	0	0	0	0	0	257	0	0	0	0	3	0	0	109	32	0	401
07:30	0	0	0	0	0	268	0	0	0	0	7	0	0	128	20	0	423
07:45	0	0	0	0	0	356	0	0	0	0	8	0	0	166	33	0	563
Total	0	0	0	0	0	1091	0	0	0	0	25	0	0	489	105	0	1710
08:00	0	0	0	0	0	294	0	0	0	0	7	0	0	153	39	0	493
08:15	0	0	0	0	0	313	0	0	0	0	7	0	0	174	32	0	526
08:30	0	0	0	0	0	280	0	0	0	0	8	0	0	178	22	0	488
08:45	0	0	0	0	0	240	0	0	0	0	8	0	0	163	30	0	441
Total	0	0	0	0	0	1127	0	0	0	0	30	0	0	668	123	0	1948
*** BREAK ***																	
16:00	0	0	0	0	0	267	0	0	0	0	35	0	0	421	15	0	738
16:15	0	0	0	0	0	280	0	0	0	0	20	0	0	401	10	0	711
16:30	0	0	0	0	0	307	0	0	0	0	41	0	0	416	20	0	784
16:45	0	0	0	0	0	319	0	0	0	0	34	0	0	469	14	0	836
Total	0	0	0	0	0	1173	0	0	0	0	130	0	0	1707	59	0	3069
17:00	0	0	0	0	0	349	0	0	0	0	63	0	0	489	19	0	920
17:15	0	0	0	0	0	365	0	0	0	0	43	0	0	499	13	0	920
17:30	0	0	0	0	0	321	0	0	0	0	21	0	0	506	11	0	859
17:45	0	0	0	0	0	320	0	0	0	0	27	0	0	453	8	0	808
Total	0	0	0	0	0	1355	0	0	0	0	154	0	0	1947	51	0	3507
Grand Total	0	0	0	0	0	4746	0	0	0	0	339	0	0	4811	338	0	10234
Apprch %	0	0	0	0	0	100	0	0	0	0	100	0	0	93.4	6.6	0	
Total %	0	0	0	0	0	46.4	0	0	0	0	3.3	0	0	47	3.3	0	

True Count
4401 Twain Ave, Suite 27
San Diego, CA 92120

File Name : 1164.09.FRIARS RD.RIO BONITO WAY
Site Code : 00000000
Start Date : 6/8/2011
Page No : 2

	Southbound					FRIARS RD Westbound					RIO BONITO WAY Northbound					FRIARS RD Eastbound					
Start Time	Left	Thru	Right	Peds	App. Total	Left	Thru	Right	Peds	App. Total	Left	Thru	Right	Peds	App. Total	Left	Thru	Right	Peds	App. Total	Int. Total
Peak Hour Analysis From 07:00 to 11:45 - Peak 1 of 1																					
Peak Hour for Entire Intersection Begins at 07:45																					
07:45	0	0	0	0	0	0	**356**	0	0	**356**	0	0	**8**	0	**8**	0	166	33	0	199	**563**
08:00	0	0	0	0	0	0	294	0	0	294	0	0	7	0	7	0	153	**39**	0	192	493
08:15	0	0	0	0	0	0	313	0	0	313	0	0	7	0	7	0	174	32	0	**206**	526
08:30	0	0	0	0	0	0	280	0	0	280	0	0	8	0	8	0	**178**	22	0	200	488
Total Volume	0	0	0	0	0	0	1243	0	0	1243	0	0	30	0	30	0	671	126	0	797	2070
% App. Total	0	0	0	0		0	100	0	0		0	0	100	0		0	84.2	15.8	0		
PHF	.000	.000	.000	.000	.000	.000	.873	.000	.000	.873	.000	.000	.938	.000	.938	.000	.942	.808	.000	.967	.919

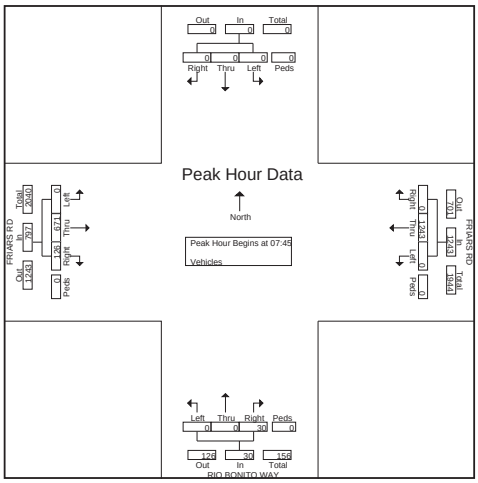

True Count
4401 Twain Ave, Suite 27
San Diego, CA 92120

File Name : 1164.09.FRIARS RD.RIO BONITO WAY
Site Code : 00000000
Start Date : 6/8/2011
Page No : 3

	Southbound					FRIARS RD Westbound					RIO BONITO WAY Northbound					FRIARS RD Eastbound					
Start Time	Left	Thru	Right	Peds	App. Total	Left	Thru	Right	Peds	App. Total	Left	Thru	Right	Peds	App. Total	Left	Thru	Right	Peds	App. Total	Int. Total
Peak Hour Analysis From 12:00 to 17:45 - Peak 1 of 1																					
Peak Hour for Entire Intersection Begins at 16:45																					
16:45	0	0	0	0	0	0	319	0	0	319	0	0	34	0	34	0	469	14	0	483	836
17:00	0	0	0	0	0	0	349	0	0	349	0	0	**63**	0	**63**	0	489	**19**	0	508	**920**
17:15	0	0	0	0	0	0	**365**	0	0	**365**	0	0	43	0	43	0	499	13	0	512	920
17:30	0	0	0	0	0	0	321	0	0	321	0	0	21	0	21	0	**506**	11	0	**517**	859
Total Volume	0	0	0	0	0	0	1354	0	0	1354	0	0	161	0	161	0	1963	57	0	2020	3535
% App. Total	0	0	0	0		0	100	0	0		0	0	100	0		0	97.2	2.8	0		
PHF	.000	.000	.000	.000	.000	.000	.927	.000	.000	.927	.000	.000	.639	.000	.639	.000	.970	.750	.000	.977	.961

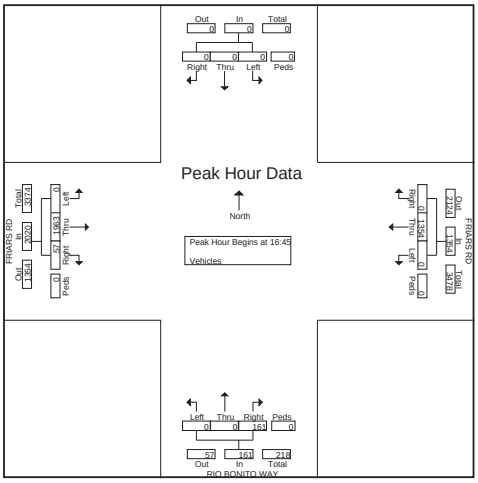

True Count
4401 Twain Ave, Suite 27
San Diego, CA 92120

File Name : 1164.10.FRIARS RD.RIVER RUN DR
Site Code : 00000000
Start Date : 6/8/2011
Page No : 1

Groups Printed- Vehicles

	Southbound				FRIARS RD Westbound				RIVER RUN DR Northbound				FRIARS RD Eastbound				
Start Time	Left	Thru	Right	Peds	Left	Thru	Right	Peds	Left	Thru	Right	Peds	Left	Thru	Right	Peds	Int. Total
07:00	2	0	0	1	20	187	21	0	17	4	5	0	6	78	2	0	343
07:15	4	0	3	0	41	237	51	0	16	14	15	0	21	83	1	0	486
07:30	1	0	2	0	28	252	56	0	16	7	11	0	17	106	3	0	499
07:45	4	2	1	0	45	337	70	0	17	14	10	0	36	121	4	0	661
Total	11	2	6	1	134	1013	198	0	66	39	41	0	80	388	10	0	1989
08:00	5	0	1	0	32	286	20	0	17	3	11	0	16	140	5	0	536
08:15	2	0	2	0	26	291	21	0	18	1	10	0	16	143	6	0	536
08:30	2	0	1	0	21	243	7	0	14	2	8	0	10	161	5	0	474
08:45	2	1	3	0	22	233	21	0	10	1	8	0	11	145	3	0	460
Total	11	1	7	0	101	1053	69	0	59	7	37	0	53	589	19	0	2006
*** BREAK ***																	
16:00	49	1	22	0	15	210	3	0	10	1	34	0	6	418	12	0	781
16:15	50	3	12	0	15	231	6	0	9	1	31	0	8	395	20	0	781
16:30	78	2	35	0	12	258	9	0	7	0	37	0	4	478	14	0	934
16:45	36	2	22	0	13	274	6	0	5	1	18	0	10	433	27	0	847
Total	213	8	91	0	55	973	24	0	31	3	120	0	28	1724	73	0	3343
17:00	39	2	15	0	10	302	8	0	8	1	44	0	2	538	25	0	994
17:15	11	1	6	0	17	324	6	0	10	0	14	0	5	517	26	0	937
17:30	13	0	9	0	12	303	9	0	18	2	20	0	11	496	18	0	911
17:45	3	0	9	0	15	297	10	0	12	0	11	0	9	445	20	0	831
Total	66	3	39	0	54	1226	33	0	48	3	89	0	27	1996	89	0	3673
Grand Total	301	14	143	1	344	4265	324	0	204	52	287	0	188	4697	191	0	11011
Apprch %	65.6	3.1	31.2	0.2	7	86.5	6.6	0	37.6	9.6	52.9	0	3.7	92.5	3.8	0	
Total %	2.7	0.1	1.3	0	3.1	38.7	2.9	0	1.9	0.5	2.6	0	1.7	42.7	1.7	0	

True Count
4401 Twain Ave, Suite 27
San Diego, CA 92120

File Name : 1164.10.FRIARS RD.RIVER RUN DR
Site Code : 00000000
Start Date : 6/8/2011
Page No : 2

	Southbound					FRIARS RD Westbound					RIVER RUN DR Northbound					FRIARS RD Eastbound					
Start Time	Left	Thru	Right	Peds	App. Total	Left	Thru	Right	Peds	App. Total	Left	Thru	Right	Peds	App. Total	Left	Thru	Right	Peds	App. Total	Int. Total
Peak Hour Analysis From 07:00 to 11:45 - Peak 1 of 1																					
Peak Hour for Entire Intersection Begins at 07:30																					
07:30	1	0	**2**	0	3	28	252	56	0	336	16	7	**11**	0	34	17	106	3	0	126	499
07:45	4	**2**	1	0	**7**	**45**	**337**	**70**	0	**452**	17	**14**	10	0	**41**	**36**	121	4	0	161	**661**
08:00	**5**	0	1	0	6	32	286	20	0	338	17	3	11	0	31	16	140	5	0	161	536
08:15	2	0	2	0	4	26	291	21	0	338	**18**	1	10	0	29	16	**143**	**6**	0	**165**	536
Total Volume	12	2	6	0	20	131	116 6	167	0	1464	68	25	42	0	135	85	510	18	0	613	2232
% App. Total	60	10	30	0		8.9	79.6	11.4	0		50.4	18.5	31.1	0		13.9	83.2	2.9	0		
PHF	.600	.250	.750	.000	.714	.728	.865	.596	.000	.810	.944	.446	.955	.000	.823	.590	.892	.750	.000	.929	.844

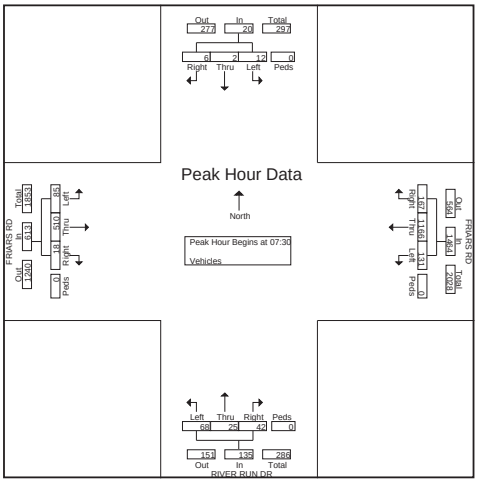

True Count
4401 Twain Ave, Suite 27
San Diego, CA 92120

File Name : 1164.10.FRIARS RD.RIVER RUN DR
Site Code : 00000000
Start Date : 6/8/2011
Page No : 3

	Southbound					FRIARS RD Westbound					RIVER RUN DR Northbound					FRIARS RD Eastbound					
Start Time	Left	Thru	Right	Peds	App. Total	Left	Thru	Right	Peds	App. Total	Left	Thru	Right	Peds	App. Total	Left	Thru	Right	Peds	App. Total	Int. Total
Peak Hour Analysis From 12:00 to 17:45 - Peak 1 of 1																					
Peak Hour for Entire Intersection Begins at 16:30																					
16:30	**78**	**2**	**35**	0	**115**	12	258	**9**	0	279	7	0	37	0	44	4	478	14	0	496	934
16:45	36	2	22	0	60	13	274	6	0	293	5	**1**	18	0	24	**10**	433	**27**	0	470	847
17:00	39	2	15	0	56	10	302	8	0	320	8	1	**44**	0	**53**	2	**538**	25	0	**565**	**994**
17:15	11	1	6	0	18	**17**	**324**	6	0	**347**	**10**	0	14	0	24	5	517	26	0	548	937
Total Volume	164	7	78	0	249	52	1158	29	0	1239	30	2	113	0	145	21	1966	92	0	2079	3712
% App Total	65.9	2.8	31.3	0		4.2	93.5	2.3	0		20.7	1.4	77.9	0		1	94.6	4.4	0		
PHF	.526	.875	.557	.000	.541	.765	.894	.806	.000	.893	.750	.500	.642	.000	.684	.525	.914	.852	.000	.920	.934

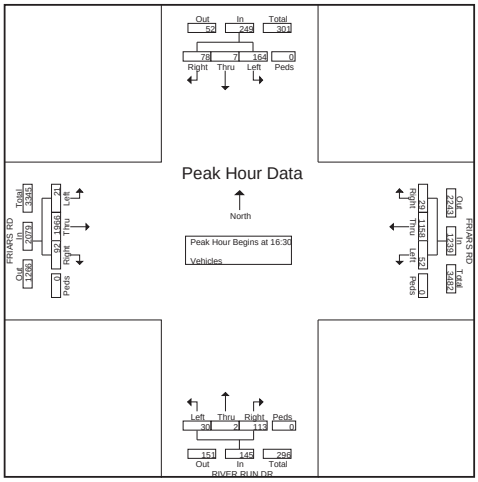

True Count
4401 Twain Ave, Suite 27
San Diego, CA 92120

File Name : 1164.11.FRIARS RD.FENTON PKWY
Site Code : 00000000
Start Date : 6/8/2011
Page No : 1

Groups Printed- Vehicles

	FENTON PKWY Southbound				FRIARS RD Westbound				FENTON PKWY Northbound				FRIARS RD Eastbound				
Start Time	Left	Thru	Right	Peds	Left	Thru	Right	Peds	Left	Thru	Right	Peds	Left	Thru	Right	Peds	Int. Total
07:00	9	6	35	0	27	175	1	1	19	1	34	0	4	73	4	0	389
07:15	18	5	34	0	29	274	3	0	21	1	27	0	3	96	2	0	513
07:30	25	8	37	0	43	281	3	0	18	2	32	0	1	116	4	0	570
07:45	25	5	38	0	43	388	5	0	17	1	24	0	6	128	8	0	688
Total	77	24	144	0	142	1118	12	1	75	5	117	0	14	413	18	0	2160
08:00	23	6	26	0	42	279	7	0	14	2	26	0	9	131	11	0	576
08:15	19	6	43	0	37	257	3	0	23	0	19	0	8	133	6	0	554
08:30	15	4	35	0	35	231	2	0	21	2	19	0	9	157	12	0	542
08:45	15	2	29	0	42	227	5	0	16	0	31	0	7	140	21	0	535
Total	72	18	133	0	156	994	17	0	74	4	95	0	33	561	50	0	2207
*** BREAK ***																	
16:00	6	0	10	0	47	181	13	1	51	5	67	0	20	421	63	0	885
16:15	6	1	11	0	33	185	5	0	45	5	59	2	23	373	60	0	808
16:30	10	2	8	0	35	212	6	0	45	4	68	0	28	461	74	0	953
16:45	3	0	13	0	33	243	16	0	41	1	53	0	33	446	67	0	949
Total	25	3	42	0	148	821	40	1	182	15	247	2	104	1701	264	0	3595
17:00	7	5	12	0	31	250	10	0	56	7	79	0	33	451	83	0	1024
17:15	7	2	11	0	32	288	13	0	57	4	74	0	34	461	82	0	1065
17:30	5	3	10	0	55	258	21	0	47	6	71	0	39	422	84	0	1021
17:45	18	8	14	0	53	226	22	0	61	5	60	0	41	306	73	0	887
Total	37	18	47	0	171	1022	66	0	221	22	284	0	147	1640	322	0	3997
Grand Total	211	63	366	0	617	3955	135	2	552	46	743	2	298	4315	654	0	11959
Apprch %	33	9.8	57.2	0	13.1	84	2.9	0	41.1	3.4	55.3	0.1	5.7	81.9	12.4	0	
Total %	1.8	0.5	3.1	0	5.2	33.1	1.1	0	4.6	0.4	6.2	0	2.5	36.1	5.5	0	

True Count
4401 Twain Ave, Suite 27
San Diego, CA 92120

File Name : 1164.11.FRIARS RD.FENTON PKWY
Site Code : 00000000
Start Date : 6/8/2011
Page No : 2

	FENTON PKWY Southbound					FRIARS RD Westbound					FENTON PKWY Northbound					FRIARS RD Eastbound					
Start Time	Left	Thru	Right	Peds	App. Total	Left	Thru	Right	Peds	App. Total	Left	Thru	Right	Peds	App. Total	Left	Thru	Right	Peds	App. Total	Int. Total
Peak Hour Analysis From 07:00 to 11:45 - Peak 1 of 1																					
Peak Hour for Entire Intersection Begins at 07:30																					
07:30	**25**	**8**	37	0	**70**	**43**	281	3	0	327	18	**2**	**32**	0	**52**	1	116	4	0	121	570
07:45	25	5	38	0	68	43	**388**	5	0	**436**	17	1	24	0	42	6	128	8	0	142	**688**
08:00	23	6	26	0	55	42	279	**7**	0	328	14	2	26	0	42	**9**	131	**11**	0	**151**	576
08:15	19	6	**43**	0	68	37	257	3	0	297	**23**	0	19	0	42	8	**133**	6	0	147	554
Total Volume	92	25	144	0	261	165	1205	18	0	1388	72	5	101	0	178	24	508	29	0	561	2388
% App Total	35.2	9.6	55.2	0		11.9	86.8	1.3	0		40.4	2.8	56.7	0		4.3	90.6	5.2	0		
PHF	.920	.781	.837	.000	.932	.959	.776	.643	.000	.796	.783	.625	.789	.000	.856	.667	.955	.659	.000	.929	.868

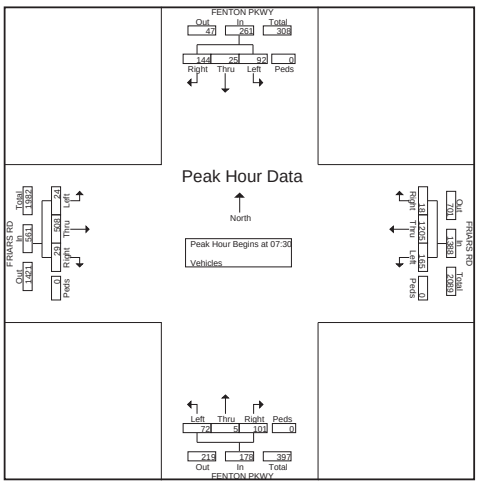

True Count
4401 Twain Ave, Suite 27
San Diego, CA 92120

File Name : 1164.11.FRIARS RD.FENTON PKWY
Site Code : 00000000
Start Date : 6/8/2011
Page No : 3

	FENTON PKWY Southbound					FRIARS RD Westbound					FENTON PKWY Northbound					FRIARS RD Eastbound					
Start Time	Left	Thru	Right	Peds	App. Total	Left	Thru	Right	Peds	App. Total	Left	Thru	Right	Peds	App. Total	Left	Thru	Right	Peds	App. Total	Int. Total
Peak Hour Analysis From 12:00 to 17:45 - Peak 1 of 1																					
Peak Hour for Entire Intersection Begins at 16:45																					
16:45	3	0	**13**	0	16	33	243	16	0	292	41	1	53	0	95	33	446	67	0	546	949
17:00	**7**	**5**	12	0	**24**	31	250	10	0	291	56	**7**	**79**	0	**142**	33	451	83	0	567	1024
17:15	7	2	11	0	20	32	**288**	13	0	333	**57**	4	74	0	135	34	**461**	82	0	**577**	**1065**
17:30	5	3	10	0	18	**55**	258	**21**	0	**334**	47	6	71	0	124	**39**	422	**84**	0	545	1021
Total Volume	22	10	46	0	78	151	1039	60	0	1250	201	18	277	0	496	139	1780	316	0	2235	4059
% App Total	28.2	12.8	59	0		12.1	83.1	4.8	0		40.5	3.6	55.8	0		6.2	79.6	14.1	0		
PHF	.786	.500	.885	.000	.813	.686	.902	.714	.000	.936	.882	.643	.877	.000	.873	.891	.965	.940	.000	.968	.953

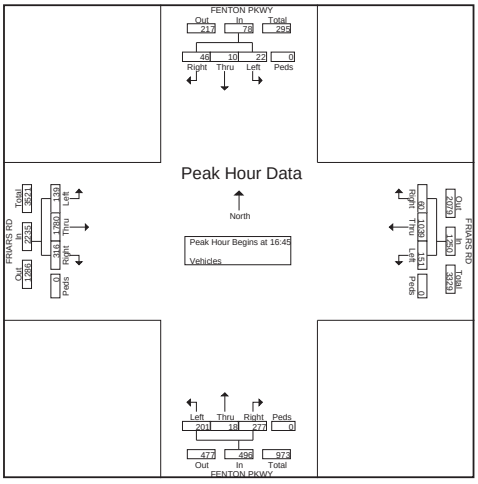

True Count
4401 Twain Ave, Suite 27
San Diego, CA 92120

File Name : 1164.12.FRIARS RD.NORTHSIDE DR
Site Code : 00000000
Start Date : 6/8/2011
Page No : 1

Groups Printed- Vehicles

	NORTHSIDE DR Southbound				FRIARS RD Westbound				NORTHSIDE DR Northbound				FRIARS RD Eastbound				
Start Time	Left	Thru	Right	Peds	Left	Thru	Right	Peds	Left	Thru	Right	Peds	Left	Thru	Right	Peds	Int. Total
07:00	29	8	0	23	65	189	0	10	7	1	33	0	2	98	34	0	499
07:15	38	13	3	25	119	238	1	4	19	2	35	0	5	98	34	0	634
07:30	58	12	20	7	89	277	6	0	27	1	44	0	3	129	44	0	717
07:45	34	5	27	1	102	357	14	1	23	2	40	0	5	125	37	0	773
Total	159	38	50	56	375	1061	21	15	76	6	152	0	15	450	149	0	2623
08:00	22	8	24	1	128	305	8	2	15	3	40	0	16	143	44	0	759
08:15	38	5	29	1	100	223	4	0	13	0	50	0	5	121	55	0	644
08:30	28	4	25	0	105	199	7	0	19	0	51	0	7	132	47	0	624
08:45	27	4	27	1	115	203	7	0	20	1	53	0	5	129	42	0	634
Total	115	21	105	3	448	930	26	2	67	4	194	0	33	525	188	0	2661
*** BREAK ***																	
16:00	13	5	8	0	104	217	18	1	26	3	136	0	40	417	60	0	1048
16:15	13	4	15	0	82	179	45	0	37	9	157	0	38	354	49	0	982
16:30	27	7	13	0	88	185	32	0	41	8	148	0	29	461	67	0	1106
16:45	10	4	17	0	106	249	24	0	36	9	156	0	45	380	44	0	1080
Total	63	20	53	0	380	830	119	1	140	29	597	0	152	1612	220	0	4216
17:00	24	2	18	0	124	243	35	0	52	8	202	0	35	431	49	0	1223
17:15	15	3	31	0	114	265	38	0	48	6	153	0	40	483	58	0	1254
17:30	15	10	13	1	144	259	42	1	47	6	161	0	55	419	36	0	1209
17:45	30	7	30	2	115	252	36	0	39	9	144	0	42	296	56	0	1058
Total	84	22	92	3	497	1019	151	1	186	29	660	0	172	1629	199	0	4744
Grand Total	421	101	300	62	1700	3840	317	19	469	68	1603	0	372	4216	756	0	14244
Apprch %	47.6	11.4	33.9	7	28.9	65.4	5.4	0.3	21.9	3.2	74.9	0	7	78.9	14.1	0	
Total %	3	0.7	2.1	0.4	11.9	27	2.2	0.1	3.3	0.5	11.3	0	2.6	29.6	5.3	0	

True Count
4401 Twain Ave, Suite 27
San Diego, CA 92120

File Name : 1164.12.FRIARS RD.NORTHSIDE DR
Site Code : 00000000
Start Date : 6/8/2011
Page No : 2

	NORTHSIDE DR Southbound					FRIARS RD Westbound					NORTHSIDE DR Northbound					FRIARS RD Eastbound					
Start Time	Left	Thru	Right	Peds	App. Total	Left	Thru	Right	Peds	App. Total	Left	Thru	Right	Peds	App. Total	Left	Thru	Right	Peds	App. Total	Int. Total
Peak Hour Analysis From 07:00 to 11:45 - Peak 1 of 1																					
Peak Hour for Entire Intersection Begins at 07:30																					
07:30	58	12	20	7	97	89	277	6	0	372	27	1	44	0	72	3	129	44	0	176	717
07:45	34	5	27	1	67	102	357	14	1	474	23	2	40	0	65	5	125	37	0	167	773
08:00	22	8	24	1	55	128	305	8	2	443	15	3	40	0	58	16	143	44	0	203	759
08:15	38	5	29	1	73	100	223	4	0	327	13	0	50	0	63	5	121	55	0	181	644
Total Volume	152	30	100	10	292	419	1162	32	3	1616	78	6	174	0	258	29	518	180	0	727	2893
% App. Total	52.1	10.3	34.2	3.4		25.9	71.9	2	0.2		30.2	2.3	67.4	0		4	71.3	24.8	0		
PHF	.655	.625	.862	.357	.753	.818	.814	.571	.375	.852	.722	.500	.870	.000	.896	.453	.906	.818	.000	.895	.936

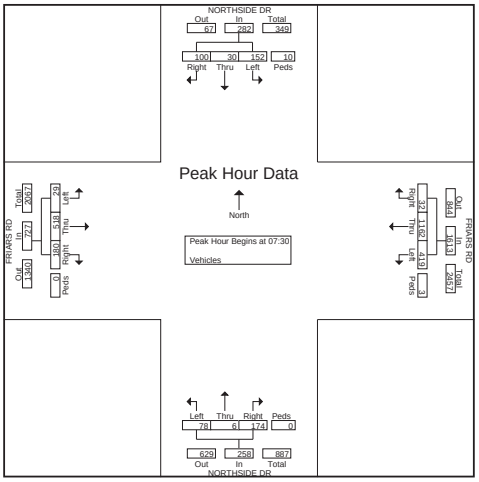

True Count
4401 Twain Ave, Suite 27
San Diego, CA 92120

File Name : 1164.12.FRIARS RD.NORTHSIDE DR
Site Code : 00000000
Start Date : 6/8/2011
Page No : 3

	NORTHSIDE DR Southbound					FRIARS RD Westbound					NORTHSIDE DR Northbound					FRIARS RD Eastbound					
Start Time	Left	Thru	Right	Peds	App. Total	Left	Thru	Right	Peds	App. Total	Left	Thru	Right	Peds	App. Total	Left	Thru	Right	Peds	App. Total	Int. Total
Peak Hour Analysis From 12:00 to 17:45 - Peak 1 of 1																					
Peak Hour for Entire Intersection Begins at 16:45																					
16:45	10	4	17	0	31	106	249	24	0	379	36	9	156	0	201	45	380	44	0	469	1080
17:00	24	2	18	0	44	124	243	35	0	402	52	8	202	0	262	35	431	49	0	515	1223
17:15	15	3	31	0	49	114	265	38	0	417	48	6	153	0	207	40	483	58	0	581	1254
17:30	15	10	13	1	39	144	259	42	1	446	47	6	161	0	214	55	419	36	0	510	1209
Total Volume	64	19	79	1	163	488	1016	139	1	1644	183	29	672	0	884	175	1713	187	0	2075	4766
% App. Total	39.3	11.7	48.5	0.6		29.7	61.8	8.5	0.1		20.7	3.3	76	0		8.4	82.6	9	0		
PHF	.667	.475	.637	.250	.832	.847	.958	.827	.250	.922	.880	.806	.832	.000	.844	.795	.887	.806	.000	.893	.950

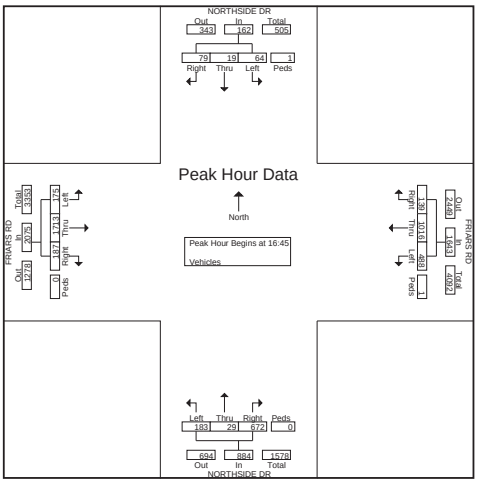

True Count
4401 Twain Ave, Suite 27
San Diego, CA 92120

File Name : 1164.16.MISSION CENTER RD.MISSION VALLEY RD
Site Code : 00000000
Start Date : 6/7/2011
Page No : 1

Groups Printed- Vehicles

	MISSION CENTER RD Southbound				MISSION VALLEY RD Westbound				MISSION CENTER RD Northbound				MISSION VALLEY RD Eastbound				
Start Time	Left	Thru	Right	Peds	Left	Thru	Right	Peds	Left	Thru	Right	Peds	Left	Thru	Right	Peds	Int. Total
07:00	0	29	53	1	0	0	3	0	41	28	1	0	4	0	5	0	165
07:15	0	43	51	0	1	1	0	0	62	52	2	0	3	0	9	0	224
07:30	0	66	70	0	0	0	2	0	68	31	3	0	11	0	20	0	271
07:45	2	55	73	0	1	0	0	0	130	42	0	0	7	0	21	0	331
Total	2	193	247	1	2	1	5	0	301	153	6	0	25	0	55	0	991
08:00	1	63	81	0	1	0	0	0	104	44	1	0	11	0	23	0	329
08:15	0	51	66	0	1	1	0	0	82	34	2	0	9	1	18	0	265
08:30	1	56	53	0	5	0	0	0	68	23	4	0	14	0	25	0	249
08:45	0	51	76	0	1	0	2	0	86	22	1	0	10	0	25	0	274
Total	2	221	276	0	8	1	2	0	340	123	8	0	44	1	91	0	1117
*** BREAK ***																	
16:00	0	69	14	1	0	0	0	0	32	95	0	0	67	0	81	0	359
16:15	0	79	18	0	2	0	0	0	39	101	0	0	47	0	74	0	360
16:30	0	75	13	0	1	0	0	0	27	86	0	0	72	0	85	1	360
16:45	0	82	14	0	1	0	0	0	26	76	1	0	61	0	68	0	329
Total	0	305	59	1	4	0	0	0	124	358	1	0	247	0	308	1	1408
17:00	0	92	15	0	0	0	1	0	46	141	1	0	101	0	160	0	557
17:15	0	90	13	0	1	0	0	0	42	120	1	0	70	0	84	0	421
17:30	0	88	9	0	2	0	0	0	52	106	0	0	57	0	57	0	371
17:45	0	77	21	0	0	0	0	0	47	94	0	0	38	0	43	0	320
Total	0	347	58	0	3	0	1	0	187	461	2	0	266	0	344	0	1669
Grand Total	4	1066	640	2	17	2	8	0	952	1095	17	0	582	1	798	1	5185
Apprch %	0.2	62.3	37.4	0.1	63	7.4	29.6	0	46.1	53.1	0.8	0	42.1	0.1	57.7	0.1	
Total %	0.1	20.6	12.3	0	0.3	0	0.2	0	18.4	21.1	0.3	0	11.2	0	15.4	0	

True Count
4401 Twain Ave, Suite 27
San Diego, CA 92120

File Name : 1164.16.MISSION CENTER RD.MISSION VALLEY RD
Site Code : 00000000
Start Date : 6/7/2011
Page No : 2

	MISSION CENTER RD Southbound					MISSION VALLEY RD Westbound					MISSION CENTER RD Northbound					MISSION VALLEY RD Eastbound					
Start Time	Left	Thru	Right	Peds	App. Total	Left	Thru	Right	Peds	App. Total	Left	Thru	Right	Peds	App. Total	Left	Thru	Right	Peds	App. Total	Int. Total
Peak Hour Analysis From 07:00 to 11:45 - Peak 1 of 1																					
Peak Hour for Entire Intersection Begins at 07:30																					
07:30	0	**66**	70	0	136	0	0	**2**	0	**2**	68	31	**3**	0	102	**11**	0	20	0	31	271
07:45	**2**	55	73	0	130	**1**	0	0	0	1	**130**	42	0	0	**172**	7	0	21	0	28	**331**
08:00	1	63	**81**	0	**145**	1	0	0	0	1	104	**44**	1	0	149	11	0	**23**	0	**34**	329
08:15	0	51	66	0	117	1	**1**	0	0	2	82	34	2	0	118	9	**1**	18	0	28	265
Total Volume	3	235	290	0	528	3	1	2	0	6	384	151	6	0	541	38	1	82	0	121	1196
% App. Total	0.6	44.5	54.9	0		50	16.7	33.3	0		71	27.9	1.1	0		31.4	0.8	67.8	0		
PHF	.375	.890	.895	.000	.910	.750	.250	.250	.000	.750	.738	.858	.500	.000	.786	.864	.250	.891	.000	.890	.903

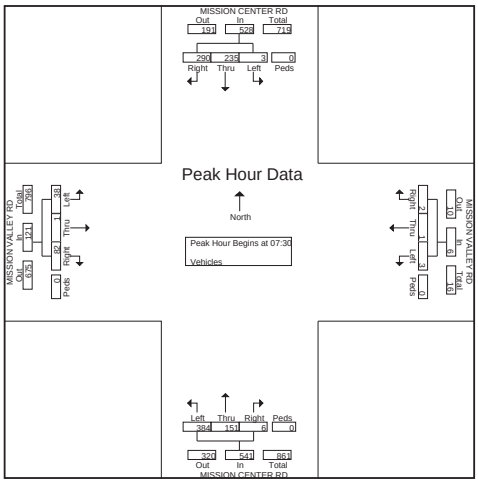

True Count
4401 Twain Ave, Suite 27
San Diego, CA 92120

File Name : 1164.16.MISSION CENTER RD.MISSION VALLEY RD
Site Code : 00000000
Start Date : 6/7/2011
Page No : 3

	MISSION CENTER RD Southbound					MISSION VALLEY RD Westbound					MISSION CENTER RD Northbound					MISSION VALLEY RD Eastbound					
Start Time	Left	Thru	Right	Peds	App. Total	Left	Thru	Right	Peds	App. Total	Left	Thru	Right	Peds	App. Total	Left	Thru	Right	Peds	App. Total	Int. Total
Peak Hour Analysis From 12:00 to 17:45 - Peak 1 of 1																					
Peak Hour for Entire Intersection Begins at 16:45																					
16:45	0	82	14	0	96	1	0	0	0	1	26	76	**1**	0	103	61	0	68	0	129	329
17:00	0	**92**	**15**	0	**107**	0	0	**1**	0	1	46	**141**	1	0	**188**	**101**	0	**160**	0	**261**	**557**
17:15	0	90	13	0	103	1	0	0	0	1	42	120	1	0	163	70	0	84	0	154	421
17:30	0	88	9	0	97	**2**	0	0	0	**2**	**52**	106	0	0	158	57	0	57	0	114	371
Total Volume	0	352	51	0	403	4	0	1	0	5	166	443	3	0	612	289	0	369	0	658	1678
% App. Total	0	87.3	12.7	0		80	0	20	0		27.1	72.4	0.5	0		43.9	0	56.1	0		
PHF	.000	.957	.850	.000	.942	.500	.000	.250	.000	.625	.798	.785	.750	.000	.814	.715	.000	.577	.000	.630	.753

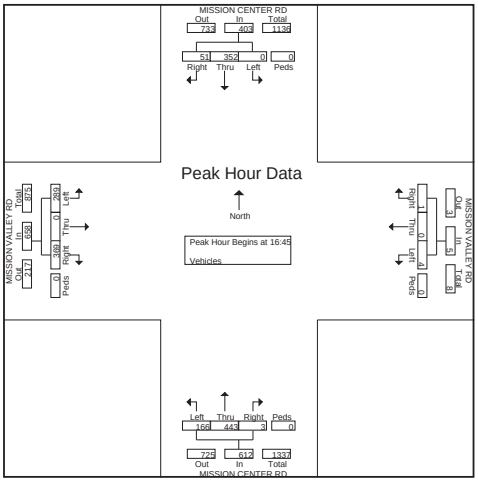

True Count
4401 Twain Ave, Suite 27
San Diego, CA 92120

File Name : 1164.17.MISSION CENTER RD.MURRAY RIDGE RD
Site Code : 00000000
Start Date : 6/7/2011
Page No : 1

Groups Printed- Vehicles

	MURRAY RIDGE RD Southbound				MISSION CENTER RD Westbound				MURRAY RIDGE RD Northbound				MISSION CENTER RD Eastbound				
Start Time	Left	Thru	Right	Peds	Left	Thru	Right	Peds	Left	Thru	Right	Peds	Left	Thru	Right	Peds	Int. Total
07:00	1	125	16	1	35	7	1	0	43	59	12	0	11	7	12	0	330
07:15	0	121	23	0	36	11	0	0	62	75	21	0	17	18	13	0	397
07:30	1	116	41	1	55	10	4	0	74	65	13	0	19	4	16	1	420
07:45	1	106	27	0	27	5	3	0	90	103	5	0	13	4	16	0	400
Total	3	468	107	2	153	33	8	0	269	302	51	0	60	33	57	1	1547
08:00	2	75	29	0	24	7	2	0	90	98	11	0	22	4	14	0	378
08:15	1	100	23	0	28	6	1	0	81	78	9	0	18	2	19	0	366
08:30	3	81	19	0	20	10	3	0	67	85	6	0	16	3	25	0	338
08:45	2	67	27	0	15	5	1	0	77	70	6	0	12	2	15	0	299
Total	8	323	98	0	87	28	7	0	315	331	32	0	68	11	73	0	1381
*** BREAK ***																	
16:00	3	97	33	0	13	9	1	0	31	110	10	0	38	17	90	0	452
16:15	0	85	33	0	15	10	0	0	28	125	16	0	46	13	83	1	455
16:30	2	92	37	0	13	10	2	0	29	122	19	0	38	11	113	1	489
16:45	3	89	37	1	18	7	1	0	33	110	19	0	44	19	87	1	469
Total	8	363	140	1	59	36	4	0	121	467	64	0	166	60	373	3	1865
17:00	5	106	42	1	35	12	1	0	35	106	20	0	65	13	112	1	554
17:15	4	94	33	0	28	14	1	0	37	111	29	0	54	27	122	1	555
17:30	2	94	37	0	19	9	1	1	64	108	16	0	57	14	100	0	522
17:45	2	71	29	0	21	2	0	0	55	106	20	0	37	11	67	0	421
Total	13	365	141	1	103	37	3	1	191	431	85	0	213	65	401	2	2052
Grand Total	32	1519	486	4	402	134	22	1	896	1531	232	0	507	169	904	6	6845
Apprch %	1.6	74.4	23.8	0.2	71.9	24	3.9	0.2	33.7	57.6	8.7	0	32	10.7	57	0.4	
Total %	0.5	22.2	7.1	0.1	5.9	2	0.3	0	13.1	22.4	3.4	0	7.4	2.5	13.2	0.1	

True Count
4401 Twain Ave, Suite 27
San Diego, CA 92120

File Name : 1164.17.MISSION CENTER RD.MURRAY RIDGE RD
Site Code : 00000000
Start Date : 6/7/2011
Page No : 2

	MURRAY RIDGE RD Southbound					MISSION CENTER RD Westbound					MURRAY RIDGE RD Northbound					MISSION CENTER RD Eastbound					
Start Time	Left	Thru	Right	Peds	App. Total	Left	Thru	Right	Peds	App. Total	Left	Thru	Right	Peds	App. Total	Left	Thru	Right	Peds	App. Total	Int. Total
Peak Hour Analysis From 07:00 to 11:45 - Peak 1 of 1																					
Peak Hour for Entire Intersection Begins at 07:15																					
07:15	0	**121**	23	0	144	36	**11**	0	0	47	62	75	**21**	0	158	17	**18**	13	0	**48**	397
07:30	1	116	**41**	**1**	**159**	**55**	10	**4**	0	**69**	74	65	13	0	152	19	4	**16**	**1**	40	**420**
07:45	1	106	27	0	134	27	5	3	0	35	**90**	**103**	5	0	198	13	4	16	0	33	400
08:00	**2**	75	29	0	106	24	7	2	0	33	90	98	11	0	**199**	**22**	4	14	0	40	378
Total Volume	4	418	120	1	543	142	33	9	0	184	316	341	50	0	707	71	30	59	1	161	1595
% App. Total	0.7	77	22.1	0.2		77.2	17.9	4.9	0		44.7	48.2	7.1	0		44.1	18.6	36.6	0.6		
PHF	.500	.864	.732	.250	.854	.645	.750	.563	.000	.667	.878	.828	.595	.000	.888	.807	.417	.922	.250	.839	.949

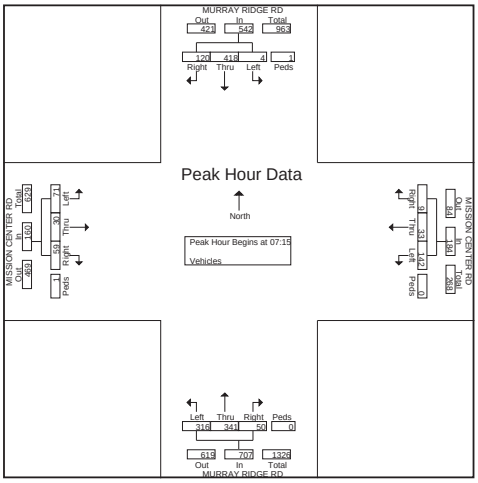

True Count
4401 Twain Ave, Suite 27
San Diego, CA 92120

File Name : 1164.17.MISSION CENTER RD.MURRAY RIDGE RD
Site Code : 00000000
Start Date : 6/7/2011
Page No : 3

	MURRAY RIDGE RD Southbound					MISSION CENTER RD Westbound					MURRAY RIDGE RD Northbound					MISSION CENTER RD Eastbound					
Start Time	Left	Thru	Right	Peds	App. Total	Left	Thru	Right	Peds	App. Total	Left	Thru	Right	Peds	App. Total	Left	Thru	Right	Peds	App. Total	Int. Total
Peak Hour Analysis From 12:00 to 17:45 - Peak 1 of 1																					
Peak Hour for Entire Intersection Begins at 16:45																					
16:45	3	89	37	**1**	130	18	7	**1**	0	26	33	110	19	0	162	44	19	87	**1**	151	469
17:00	**5**	**106**	**42**	1	**154**	**35**	12	1	0	**48**	35	106	20	0	161	**65**	13	112	1	191	554
17:15	4	94	33	0	131	28	**14**	1	0	43	37	**111**	**29**	0	177	54	**27**	**122**	1	**204**	**555**
17:30	2	94	37	0	133	19	9	1	**1**	30	**64**	108	16	0	**188**	57	14	100	0	171	522
Total Volume	14	383	149	2	548	100	42	4	1	147	169	435	84	0	688	220	73	421	3	717	2100
% App. Total	2.6	69.9	27.2	0.4		68	28.6	2.7	0.7		24.6	63.2	12.2	0		30.7	10.2	58.7	0.4		
PHF	.700	.903	.887	.500	.890	.714	.750	1.00	.250	.766	.660	.980	.724	.000	.915	.846	.676	.863	.750	.879	.946

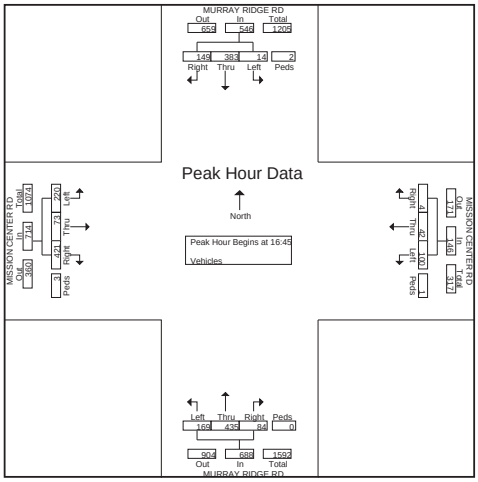

True Count
4401 Twain Ave, Suite 27
San Diego, CA 92120

File Name : 1164.22.I-805.NB RAMPSMURRAY RIDGE RD
Site Code : 00000000
Start Date : 6/7/2011
Page No : 1

Groups Printed- Vehicles

	MURRAY RIDGE RD Southbound				I-805 NB RAMP Westbound				MURRAY RIDGE RD Northbound				I-805 NB RAMP Eastbound				
Start Time	Left	Thru	Right	Peds	Left	Thru	Right	Peds	Left	Thru	Right	Peds	Left	Thru	Right	Peds	Int. Total
07:00	0	110	72	1	5	0	84	0	5	34	0	0	0	0	0	0	311
07:15	0	104	76	0	4	0	101	0	12	63	0	0	0	0	0	0	360
07:30	0	114	94	0	4	0	83	0	7	69	0	0	0	0	0	0	371
07:45	0	96	56	0	1	0	129	0	8	68	0	0	0	0	0	0	358
Total	0	424	298	1	14	0	397	0	32	234	0	0	0	0	0	0	1400
08:00	0	74	44	0	5	0	158	0	12	63	0	0	0	0	0	0	356
08:15	0	87	70	0	8	0	124	0	8	65	0	0	0	0	0	0	362
08:30	0	91	61	0	5	0	98	0	16	56	0	0	0	0	0	0	327
08:45	0	68	42	0	9	0	96	0	14	63	0	0	0	0	0	0	292
Total	0	320	217	0	27	0	476	0	50	247	0	0	0	0	0	0	1337
*** BREAK ***																	
16:00	0	128	77	1	10	0	97	0	8	82	0	0	0	0	0	0	403
16:15	0	122	72	0	13	0	105	0	8	83	0	0	0	0	0	0	403
16:30	0	122	94	0	18	0	100	0	12	59	0	0	0	0	0	0	405
16:45	0	132	61	0	7	0	105	0	13	63	0	0	0	0	0	0	381
Total	0	504	304	1	48	0	407	0	41	287	0	0	0	0	0	0	1592
17:00	0	165	86	0	15	0	96	0	8	79	0	0	0	0	0	0	449
17:15	0	148	93	0	19	0	123	0	6	63	0	0	0	0	0	0	452
17:30	0	147	69	0	8	0	110	0	14	92	0	0	0	0	0	0	440
17:45	0	95	58	0	11	0	121	0	7	88	0	0	0	0	0	0	380
Total	0	555	306	0	53	0	450	0	35	322	0	0	0	0	0	0	1721
Grand Total	0	1803	1125	2	142	0	1730	0	158	1090	0	0	0	0	0	0	6050
Apprch %	0	61.5	38.4	0.1	7.6	0	92.4	0	12.7	87.3	0	0	0	0	0	0	
Total %	0	29.8	18.6	0	2.3	0	28.6	0	2.6	18	0	0	0	0	0	0	

True Count
4401 Twain Ave, Suite 27
San Diego, CA 92120

File Name : 1164.22.I-805.NB RAMPSMURRAY RIDGE RD
Site Code : 00000000
Start Date : 6/7/2011
Page No : 2

	MURRAY RIDGE RD Southbound					I-805 NB RAMP Westbound					MURRAY RIDGE RD Northbound					I-805 NB RAMP Eastbound					
Start Time	Left	Thru	Right	Peds	App. Total	Left	Thru	Right	Peds	App. Total	Left	Thru	Right	Peds	App. Total	Left	Thru	Right	Peds	App. Total	Int. Total
Peak Hour Analysis From 07:00 to 11:45 - Peak 1 of 1																					
Peak Hour for Entire Intersection Begins at 07:30																					
07:30	0	**114**	**94**	0	**208**	4	0	83	0	87	7	**69**	0	0	**76**	0	0	0	0	0	**371**
07:45	0	96	56	0	152	1	0	129	0	130	8	68	0	0	76	0	0	0	0	0	358
08:00	0	74	44	0	118	5	0	**158**	0	**163**	**12**	63	0	0	75	0	0	0	0	0	356
08:15	0	87	70	0	157	**8**	0	124	0	132	8	65	0	0	73	0	0	0	0	0	362
Total Volume	0	371	264	0	635	18	0	494	0	512	35	265	0	0	300	0	0	0	0	0	1447
% App. Total	0	58.4	41.6	0		3.5	0	96.5	0		11.7	88.3	0	0		0	0	0	0		
PHF	.000	.814	.702	.000	.763	.563	.000	.782	.000	.785	.729	.960	.000	.000	.987	.000	.000	.000	.000	.000	.975

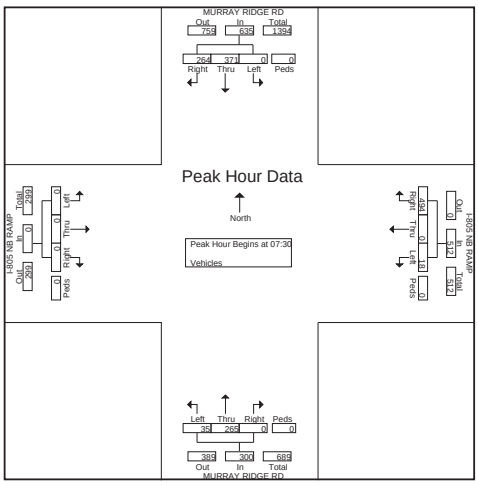

True Count
4401 Twain Ave, Suite 27
San Diego, CA 92120

File Name : 1164.22.I-805.NB RAMPSMURRAY RIDGE RD
Site Code : 00000000
Start Date : 6/7/2011
Page No : 3

	MURRAY RIDGE RD Southbound					I-805 NB RAMP Westbound					MURRAY RIDGE RD Northbound					I-805 NB RAMP Eastbound					
Start Time	Left	Thru	Right	Peds	App. Total	Left	Thru	Right	Peds	App. Total	Left	Thru	Right	Peds	App. Total	Left	Thru	Right	Peds	App. Total	Int. Total
Peak Hour Analysis From 12:00 to 17:45 - Peak 1 of 1																					
Peak Hour for Entire Intersection Begins at 16:45																					
16:45	0	132	61	0	193	7	0	105	0	112	13	63	0	0	76	0	0	0	0	0	381
17:00	0	**165**	86	0	**251**	15	0	96	0	111	8	79	0	0	87	0	0	0	0	0	449
17:15	0	148	**93**	0	241	**19**	0	**123**	0	**142**	6	63	0	0	69	0	0	0	0	0	**452**
17:30	0	147	69	0	216	8	0	110	0	118	**14**	**92**	0	0	**106**	0	0	0	0	0	440
Total Volume	0	592	309	0	901	49	0	434	0	483	41	297	0	0	338	0	0	0	0	0	1722
% App. Total	0	65.7	34.3	0		10.1	0	89.9	0		12.1	87.9	0	0		0	0	0	0		
PHF	.000	.897	.831	.000	.897	.645	.000	.882	.000	.850	.732	.807	.000	.000	.797	.000	.000	.000	.000	.000	.952

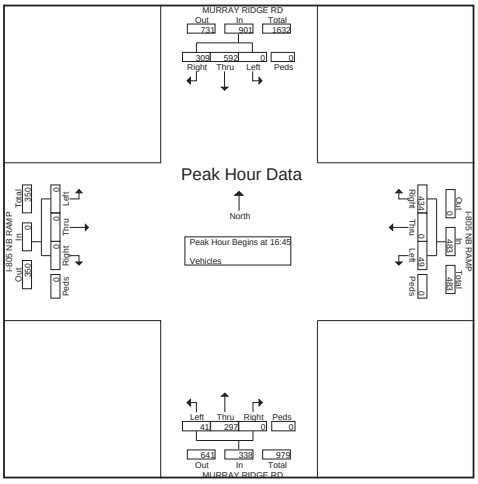

True Count

4401 Twain Ave, Suite 27
San Diego, CA 92120

File Name : 1164.23.I-805 SB RAMPS.MURRAY RIDGE RD
Site Code : 00000000
Start Date : 6/7/2011
Page No : 1

Groups Printed- Vehicles

	MURRAY RIDGE RD Southbound				I-805 SB RAMP Westbound				MURRAY RIDGE RD Northbound				I-805 SB RAMP Eastbound				
Start Time	Left	Thru	Right	Peds	Left	Thru	Right	Peds	Left	Thru	Right	Peds	Left	Thru	Right	Peds	Int. Total
07:00	110	6	0	1	0	0	0	0	0	7	15	0	35	0	1	0	175
07:15	101	4	0	0	0	0	0	0	0	15	8	0	71	0	1	0	200
07:30	91	4	0	0	0	0	0	0	0	10	6	0	56	0	1	0	168
07:45	69	1	0	0	0	0	0	0	0	10	8	0	43	0	2	0	133
Total	371	15	0	1	0	0	0	0	0	42	37	0	205	0	5	0	676
08:00	63	7	0	0	0	0	0	0	0	14	5	0	60	0	5	0	154
08:15	89	9	0	0	0	0	0	0	0	11	8	0	62	0	5	0	184
08:30	88	8	0	0	0	0	0	0	0	16	10	0	63	0	2	0	187
08:45	70	6	0	0	0	0	0	0	0	16	10	0	65	0	4	0	171
Total	310	30	0	0	0	0	0	0	0	57	33	0	250	0	16	0	696
*** BREAK ***																	
16:00	100	19	0	1	0	0	0	0	0	9	10	0	96	0	9	0	244
16:15	116	17	0	0	0	0	0	0	0	17	7	0	80	0	5	0	242
16:30	123	19	0	0	0	0	0	0	0	13	9	0	59	0	4	0	227
16:45	128	13	0	0	0	0	0	0	0	15	4	0	59	0	6	0	225
Total	467	68	0	1	0	0	0	0	0	54	30	0	294	0	24	0	938
17:00	152	21	0	0	0	0	0	0	0	7	6	0	92	0	5	0	283
17:15	153	22	0	0	0	0	0	0	0	10	10	0	67	0	9	0	271
17:30	119	21	0	0	0	0	0	0	0	11	6	0	101	0	11	0	269
17:45	90	15	0	0	0	0	0	0	0	12	10	0	66	0	10	0	203
Total	514	79	0	0	0	0	0	0	0	40	32	0	326	0	35	0	1026
Grand Total	1662	192	0	2	0	0	0	0	0	193	132	0	1075	0	80	0	3336
Apprch %	89.5	10.3	0	0.1	0	0	0	0	0	59.4	40.6	0	93.1	0	6.9	0	
Total %	49.8	5.8	0	0.1	0	0	0	0	0	5.8	4	0	32.2	0	2.4	0	

True Count

4401 Twain Ave, Suite 27
San Diego, CA 92120

File Name : 1164.23.I-805 SB RAMPS.MURRAY RIDGE RD
Site Code : 00000000
Start Date : 6/7/2011
Page No : 2

	MURRAY RIDGE RD Southbound					I-805 SB RAMP Westbound					MURRAY RIDGE RD Northbound					I-805 SB RAMP Eastbound					
Start Time	Left	Thru	Right	Peds	App. Total	Left	Thru	Right	Peds	App. Total	Left	Thru	Right	Peds	App. Total	Left	Thru	Right	Peds	App. Total	Int. Total
Peak Hour Analysis From 07:00 to 11:45 - Peak 1 of 1																					
Peak Hour for Entire Intersection Begins at 08:00																					
08:00	63	7	0	0	70	0	0	0	0	0	0	14	5	0	19	60	0	**5**	0	65	154
08:15	**89**	**9**	0	0	**98**	0	0	0	0	0	0	11	8	0	19	62	0	5	0	67	184
08:30	88	8	0	0	96	0	0	0	0	0	0	**16**	**10**	0	**26**	63	0	2	0	65	**187**
08:45	70	6	0	0	76	0	0	0	0	0	0	16	10	0	26	**65**	0	4	0	**69**	171
Total Volume	310	30	0	0	340	0	0	0	0	0	0	57	33	0	90	250	0	16	0	266	696
% App. Total	91.2	8.8	0	0		0	0	0	0		0	63.3	36.7	0		94	0	6	0		
PHF	.871	.833	.000	.000	.867	.000	.000	.000	.000	.000	.000	.891	.825	.000	.865	.962	.000	.800	.000	.964	.930

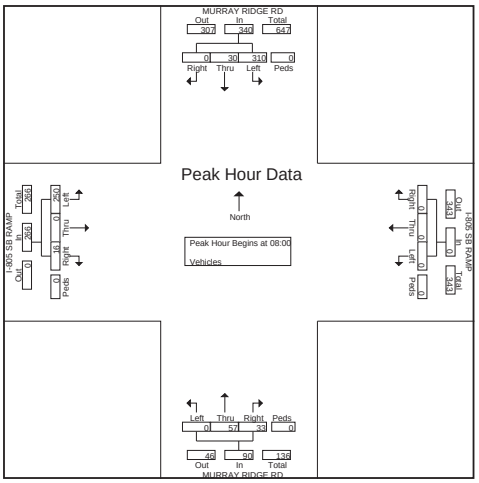

True Count

4401 Twain Ave, Suite 27
San Diego, CA 92120

File Name : 1164.23.I-805 SB RAMPS.MURRAY RIDGE RD
Site Code : 00000000
Start Date : 6/7/2011
Page No : 3

	MURRAY RIDGE RD Southbound					I-805 SB RAMP Westbound					MURRAY RIDGE RD Northbound					I-805 SB RAMP Eastbound					
Start Time	Left	Thru	Right	Peds	App. Total	Left	Thru	Right	Peds	App. Total	Left	Thru	Right	Peds	App. Total	Left	Thru	Right	Peds	App. Total	Int. Total
Peak Hour Analysis From 12:00 to 17:45 - Peak 1 of 1																					
Peak Hour for Entire Intersection Begins at 16:45																					
16:45	128	13	0	0	141	0	0	0	0	0	0	**15**	4	0	19	59	0	6	0	65	225
17:00	152	21	0	0	173	0	0	0	0	0	0	7	6	0	13	92	0	5	0	97	**283**
17:15	**153**	**22**	0	0	**175**	0	0	0	0	0	0	10	**10**	0	**20**	67	0	9	0	76	271
17:30	119	21	0	0	140	0	0	0	0	0	0	11	6	0	17	**101**	0	**11**	0	**112**	269
Total Volume	552	77	0	0	629	0	0	0	0	0	0	43	26	0	69	319	0	31	0	350	1048
% App Total	87.8	12.2	0	0		0	0	0	0		0	62.3	37.7	0		91.1	0	8.9	0		
PHF	.902	.875	.000	.000	.899	.000	.000	.000	.000	.000	.000	.717	.650	.000	.863	.790	.000	.705	.000	.781	.926

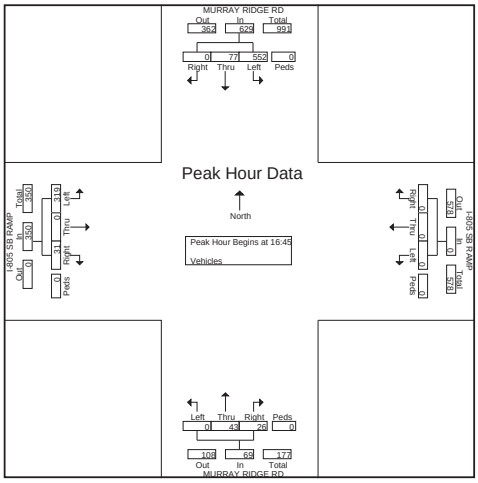

True Count

4401 Twain Ave, Suite 27
San Diego, CA 92120

File Name : 1164.24.QUALCOMM WAY.RIO SAN DIEGO DR
Site Code : 00000000
Start Date : 6/7/2011
Page No : 1

Groups Printed- Vehicles

	QUALCOMM WAY Southbound				RIO SAN DIEGO DR Westbound				QUALCOMM WAY Northbound				RIO SAN DIEGO DR Eastbound				
Start Time	Left	Thru	Right	Peds	Left	Thru	Right	Peds	Left	Thru	Right	Peds	Left	Thru	Right	Peds	Int. Total
07:00	10	29	5	0	55	7	11	0	12	46	104	0	19	9	22	0	329
07:15	15	48	7	0	51	8	12	0	7	50	167	0	23	13	27	0	428
07:30	24	32	7	0	57	2	22	0	12	60	142	0	21	13	17	0	409
07:45	25	45	4	0	50	3	22	0	23	93	162	0	22	10	28	0	487
Total	74	154	23	0	213	20	67	0	54	249	575	0	85	45	94	0	1653
08:00	26	51	9	0	44	3	19	0	18	74	123	0	18	12	19	0	416
08:15	16	33	2	0	64	10	13	0	23	81	150	0	29	10	16	0	447
08:30	12	48	10	0	65	12	8	0	11	72	120	0	17	15	41	0	431
08:45	21	47	18	0	51	7	15	0	25	61	107	0	19	8	30	1	410
Total	75	179	39	0	224	32	55	0	77	288	500	0	83	45	106	1	1704
*** BREAK ***																	
16:00	4	77	35	1	155	41	49	0	63	90	119	1	43	30	63	0	771
16:15	5	64	38	0	139	41	42	0	47	70	90	0	48	26	54	0	664
16:30	1	89	30	0	147	64	60	0	56	74	88	0	28	17	47	0	701
16:45	6	78	31	0	119	48	48	0	51	80	101	0	49	37	70	0	718
Total	16	308	134	1	560	194	199	0	217	314	398	1	168	110	234	0	2854
17:00	13	90	22	0	190	73	86	0	61	91	92	0	41	21	79	0	859
17:15	9	118	65	0	153	40	41	0	61	93	88	0	50	33	60	5	816
17:30	5	93	25	0	151	36	43	0	66	72	79	0	55	19	64	0	708
17:45	8	68	38	0	112	25	27	0	47	72	88	0	39	36	54	0	614
Total	35	369	150	0	606	174	197	0	235	328	347	0	185	109	257	5	2997
Grand Total	200	1010	346	1	1603	420	518	0	583	1179	1820	1	521	309	691	6	9208
Apprch %	12.8	64.9	22.2	0.1	63.1	16.5	20.4	0	16.3	32.9	50.8	0	34.1	20.2	45.3	0.4	
Total %	2.2	11	3.8	0	17.4	4.6	5.6	0	6.3	12.8	19.8	0	5.7	3.4	7.5	0.1	

True Count

4401 Twain Ave, Suite 27
San Diego, CA 92120

File Name : 1164.24.QUALCOMM WAY.RIO SAN DIEGO DR
Site Code : 00000000
Start Date : 6/7/2011
Page No : 2

	QUALCOMM WAY Southbound					RIO SAN DIEGO DR Westbound					QUALCOMM WAY Northbound					RIO SAN DIEGO DR Eastbound					
Start Time	Left	Thru	Right	Peds	App. Total	Left	Thru	Right	Peds	App. Total	Left	Thru	Right	Peds	App. Total	Left	Thru	Right	Peds	App. Total	Int. Total
Peak Hour Analysis From 07:00 to 11:45 - Peak 1 of 1																					
Peak Hour for Entire Intersection Begins at 07:45																					
07:45	25	45	4	0	74	50	3	**22**	0	75	**23**	**93**	**162**	0	**278**	22	10	28	0	60	**487**
08:00	**26**	**51**	9	0	**86**	44	3	19	0	66	18	74	123	0	215	18	12	19	0	49	416
08:15	16	33	2	0	51	64	10	13	0	**87**	23	81	150	0	254	**29**	10	16	0	55	447
08:30	12	48	**10**	0	70	**65**	**12**	8	0	85	11	72	120	0	203	17	**15**	**41**	0	**73**	431
Total Volume	79	177	25	0	281	223	28	62	0	313	75	320	555	0	950	86	47	104	0	237	1781
% App. Total	28.1	63	8.9	0		71.2	8.9	19.8	0		7.9	33.7	58.4	0		36.3	19.8	43.9	0		
PHF	.760	.868	.625	.000	.817	.858	.583	.705	.000	.899	.815	.860	.856	.000	.854	.741	.783	.634	.000	.812	.914

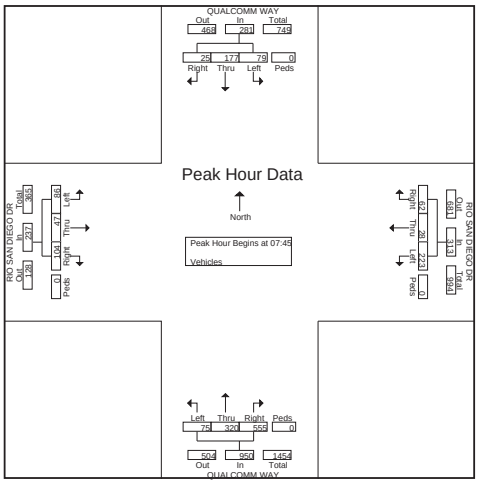

True Count

4401 Twain Ave, Suite 27
San Diego, CA 92120

File Name : 1164.24.QUALCOMM WAY.RIO SAN DIEGO DR
Site Code : 00000000
Start Date : 6/7/2011
Page No : 3

	QUALCOMM WAY Southbound					RIO SAN DIEGO DR Westbound					QUALCOMM WAY Northbound					RIO SAN DIEGO DR Eastbound					
Start Time	Left	Thru	Right	Peds	App. Total	Left	Thru	Right	Peds	App. Total	Left	Thru	Right	Peds	App. Total	Left	Thru	Right	Peds	App. Total	Int. Total
Peak Hour Analysis From 12:00 to 17:45 - Peak 1 of 1																					
Peak Hour for Entire Intersection Begins at 16:45																					
16:45	6	78	31	0	115	119	48	48	0	215	51	80	**101**	0	232	49	**37**	70	0	**156**	718
17:00	**13**	90	22	0	125	**190**	**73**	**86**	0	**349**	61	91	92	0	**244**	41	21	**79**	0	141	**859**
17:15	9	**118**	**65**	0	**192**	153	40	41	0	234	61	**93**	88	0	242	50	33	60	**5**	148	816
17:30	5	93	25	0	123	151	36	43	0	230	**66**	72	79	0	217	**55**	19	64	0	138	708
Total Volume	33	379	143	0	555	613	197	218	0	1028	239	336	360	0	935	195	110	273	5	583	3101
% App. Total	5.9	68.3	25.8	0		59.6	19.2	21.2	0		25.6	35.9	38.5	0		33.4	18.9	46.8	0.9		
PHF	.635	.803	.550	.000	.723	.807	.675	.634	.000	.736	.905	.903	.891	.000	.958	.886	.743	.864	.250	.934	.903

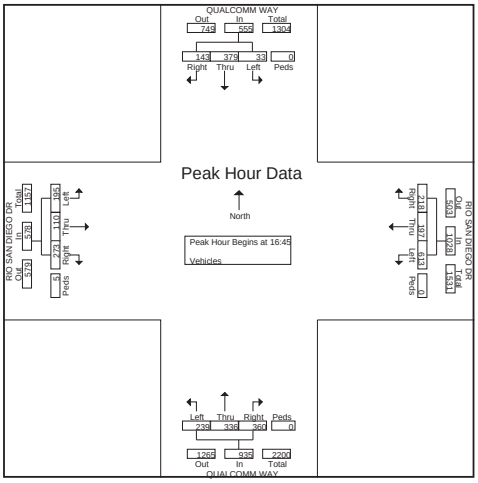

INTERSECTION TURNING MOVEMENT COUNTS

PREPARED BY: PACIFIC TECHNICAL DATA

DATE:	LOCATION:	MISSION VALLEY	PROJECT #:	PTD13-0614-01
6/12/13	NORTH & SOUTH:	MISSION CENTER	LOCATION #:	1
WEDNESDAY	EAST & WEST:	AQUATERA	CONTROL:	SIGNAL

NOTES:

AM / PM / MD / OTHER / OTHER — ▲ N, ◄ W, E ►, S ▼

		NORTHBOUND MISSION CENTER			SOUTHBOUND MISSION CENTER			EASTBOUND AQUATERA			WESTBOUND AQUATERA				U-TURNS				
	LANES:	NL 1	NT 2	NR 1	SL 1	ST 2	SR 0	EL 0	ET 1	ER 0	WL 1.3	WT 0.3	WR 0.3	TOTAL	NB X	SB X	EB X	WB X	TTL
AM	7:00 AM	4	36	1	0	74	2	0	0	0	3	0	1	121					0
	7:15 AM	5	53	0	0	77	6	2	0	1	3	0	7	154					0
	7:30 AM	9	33	6	2	109	11	0	0	2	4	0	5	181					0
	7:45 AM	9	28	1	1	103	17	0	1	3	4	0	1	168					0
	8:00 AM	8	40	2	1	144	10	0	0	1	3	0	3	212					0
	8:15 AM	6	37	2	0	116	5	0	0	1	6	0	1	174					0
	8:30 AM	4	26	3	0	101	2	0	0	2	2	0	3	143					0
	8:45 AM	4	33	5	1	108	6	2	0	1	7	0	0	167					0
	VOLUMES	49	286	20	5	832	59	4	1	11	32	0	21	1,320	0	0	0	0	0
	APPROACH %	14%	81%	6%	1%	93%	7%	25%	6%	69%	60%	0%	40%						
	APP/DEPART	355	/	311	896	/	875	16	/	26	53	/	108	0					
	BEGIN PEAK HR		7:30 AM																
	VOLUMES	32	138	11	4	472	43	0	1	7	17	0	10	735					
	APPROACH %	18%	76%	6%	1%	91%	8%	0%	13%	88%	63%	0%	37%						
	PEAK HR FACTOR		0.905			0.837			0.500			0.750		0.867					
	APP/DEPART	181	/	148	519	/	496	8	/	16	27	/	75	0					
PM	4:00 PM	3	140	13	4	48	2	0	0	1	2	0	2	215					0
	4:15 PM	3	130	7	5	68	1	2	0	4	7	0	0	227					0
	4:30 PM	7	162	12	3	65	3	5	0	5	1	0	0	263					0
	4:45 PM	4	107	11	3	81	3	2	0	3	2	0	3	219					0
	5:00 PM	2	184	9	3	84	5	7	0	9	2	0	0	305					0
	5:15 PM	6	127	13	2	92	2	7	0	10	1	0	1	261					0
	5:30 PM	4	123	9	4	90	6	3	0	2	5	0	2	248					0
	5:45 PM	8	125	12	7	81	18	7	0	4	1	0	0	263					0
	VOLUMES	37	1,088	86	31	609	40	33	0	38	21	0	8	2,001	0	0	0	0	0
	APPROACH %	3%	90%	7%	5%	90%	6%	46%	0%	54%	72%	0%	28%						
	APP/DEPART	1,221	/	1,139	680	/	668	71	/	117	29	/	77	0					
	BEGIN PEAK HR		5:00 PM																
	VOLUMES	20	559	43	16	347	31	24	0	25	9	0	3	1,077					
	APPROACH %	3%	90%	7%	4%	88%	8%	49%	0%	51%	75%	0%	25%						
	PEAK HR FACTOR		0.797			0.929			0.721			0.429		0.883					
	APP/DEPART	622	/	586	394	/	381	49	/	59	12	/	51	0					

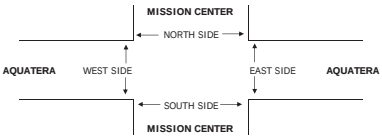

		PEDESTRIAN CROSSINGS					PEDESTRIAN ACTIVATIONS					BICYCLE CROSSINGS				
		N SIDE	S SIDE	E SIDE	W SIDE	TOTAL	N SIDE	S SIDE	E SIDE	W SIDE	TOTAL	NS	SS	ES	WS	TOTAL
AM	7:00 AM	1		1		2					0					0
	7:15 AM				2	2					0					0
	7:30 AM	1		1	2	4					0					0
	7:45 AM	1			1	2					0					0
	8:00 AM					0					0					0
	8:15 AM				1	1					0					0
	8:30 AM	1		1	1	3					0					0
	8:45 AM		1			1					0					0
	TOTAL	4	1	3	7	15	0	0	0	0	0	0	0	0	0	0
PM	4:00 PM			1		1					0					0
	4:15 PM			1	4	5					0					0
	4:30 PM				1	1					0					0
	4:45 PM					0					0					0
	5:00 PM			1		1					0					0
	5:15 PM				2	2					0					0
	5:30 PM			1		1					0					0
	5:45 PM	1			1	2					0					0
	TOTAL	1	0	4	8	13	0	0	0	0	0	0	0	0	0	0

PACIFIC TECHNICAL DATA

TURNING MOVEMENT COUNTS

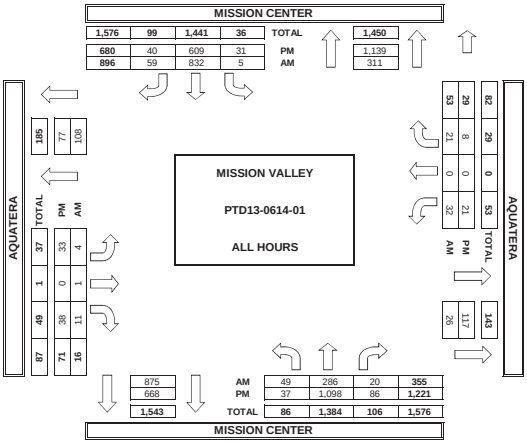

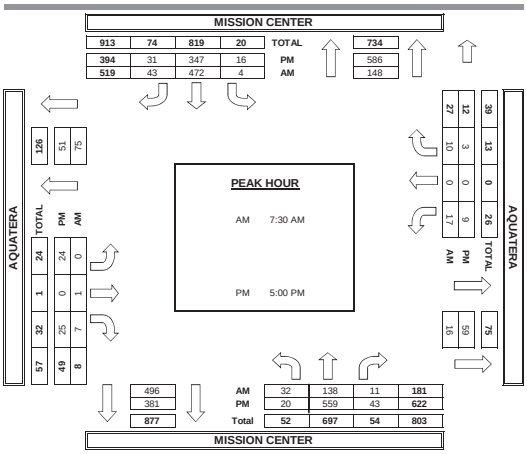

INTERSECTION TURNING MOVEMENT COUNTS

PREPARED BY: PACIFIC TECHNICAL DATA

DATE:	LOCATION:	KEARNY MESA	PROJECT #:	PTD13-0531-01
5/30/13	NORTH & SOUTH:	MURRAY RIDGE	LOCATION #:	1
THURSDAY	EAST & WEST:	PINECREST	CONTROL:	SIGNAL

NOTES:

AM / PM / MD / OTHER / OTHER — ▲ N, ◄ W, E ►, S ▼

		NORTHBOUND MURRAY RIDGE			SOUTHBOUND MURRAY RIDGE			EASTBOUND PINECREST			WESTBOUND PINECREST				U-TURNS				
	LANES:	NL 1	NT 1	NR 0	SL 1	ST 1	SR 0	EL 0	ET 1	ER 0	WL 0	WT 1	WR 0	TOTAL	NB X	SB X	EB X	WB X	TTL
AM	7:00 AM	4	78	4	2	98	0	1	1	14	11	1	1	215					0
	7:15 AM	5	92	3	2	134	0	0	1	25	7	4	5	278					0
	7:30 AM	6	123	0	0	98	0	0	0	14	16	2	5	264					0
	7:45 AM	10	134	4	3	93	1	0	0	12	8	3	4	272					0
	8:00 AM	2	104	6	0	92	2	1	0	22	8	0	2	239					0
	8:15 AM	5	98	1	1	65	0	2	0	13	2	3	2	192					0
	8:30 AM	5	116	5	0	75	2	0	0	12	12	3	1	231					0
	8:45 AM	9	83	3	0	55	0	0	0	11	8	0	1	170					0
	VOLUMES	46	828	26	8	710	5	4	2	123	72	16	21	1,861	0	0	0	0	0
	APPROACH %	5%	92%	3%	1%	98%	1%	3%	2%	95%	66%	15%	19%						
	APP/DEPART	900	/	853	723	/	905	129	/	36	109	/	67	0					
	BEGIN PEAK HR		7:15 AM																
	VOLUMES	23	453	13	5	417	3	1	1	73	39	9	16	1,053					
	APPROACH %	5%	93%	3%	1%	98%	1%	1%	1%	97%	61%	14%	25%						
	PEAK HR FACTOR		0.826			0.781			0.721			0.696		0.947					
	APP/DEPART	489	/	470	425	/	529	75	/	19	64	/	35	0					
PM	4:00 PM	6	125	6	0	96	1	0	1	15	9	0	3	262					0
	4:15 PM	9	131	4	2	94	0	1	1	22	8	0	5	277					0
	4:30 PM	8	107	10	1	119	2	0	4	18	11	1	1	282					0
	4:45 PM	15	128	6	1	98	0	2	1	16	11	1	0	279					0
	5:00 PM	11	116	4	5	130	2	0	1	27	11	1	0	308					0
	5:15 PM	6	132	9	0	135	0	3	1	26	6	2	1	321					0
	5:30 PM	9	105	9	4	133	1	4	2	28	16	0	4	315					0
	5:45 PM	5	108	6	1	113	1	1	1	17	13	1	1	268					0
	VOLUMES	69	952	54	14	918	7	11	12	169	85	6	15	2,312	0	0	0	0	0
	APPROACH %	6%	89%	5%	1%	98%	1%	6%	6%	88%	80%	6%	14%						
	APP/DEPART	1,075	/	978	939	/	1,172	192	/	80	106	/	82	0					
	BEGIN PEAK HR		4:45 PM																
	VOLUMES	41	481	28	10	496	3	9	5	97	44	4	5	1,223					
	APPROACH %	7%	87%	5%	2%	97%	1%	8%	5%	87%	83%	8%	9%						
	PEAK HR FACTOR		0.923			0.922			0.816			0.663		0.952					
	APP/DEPART	550	/	495	509	/	637	111	/	43	53	/	48	0					

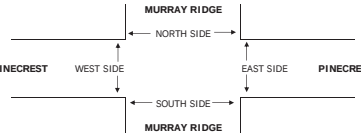

		PEDESTRIAN CROSSINGS					PEDESTRIAN ACTIVATIONS					BICYCLE CROSSINGS				
		N SIDE	S SIDE	E SIDE	W SIDE	TOTAL	N SIDE	S SIDE	E SIDE	W SIDE	TOTAL	NS	SS	ES	WS	TOTAL
AM	7:00 AM		2	2		4					0					0
	7:15 AM		3	1		4					0					0
	7:30 AM		2		1	3					0					0
	7:45 AM	1	1	1		3					0					0
	8:00 AM	1		2		3					0					0
	8:15 AM		1	1	1	3					0					0
	8:30 AM	1		1	1	3					0					0
	8:45 AM			1		1					0					0
	TOTAL	3	9	9	3	24	0	0	0	0	0	0	0	0	0	0
PM	4:00 PM			1		1					0					0
	4:15 PM	2	1			3					0					0
	4:30 PM					0					0					0
	4:45 PM		2			2					0					0
	5:00 PM					0					0					0
	5:15 PM					0					0					0
	5:30 PM					0					0					0
	5:45 PM					0					0					0
	TOTAL	2	3	1	0	6	0	0	0	0	0	0	0	0	0	0

PACIFIC TECHNICAL DATA

TURNING MOVEMENT COUNTS

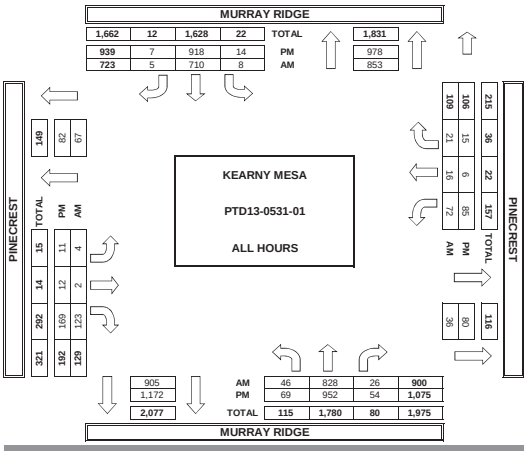

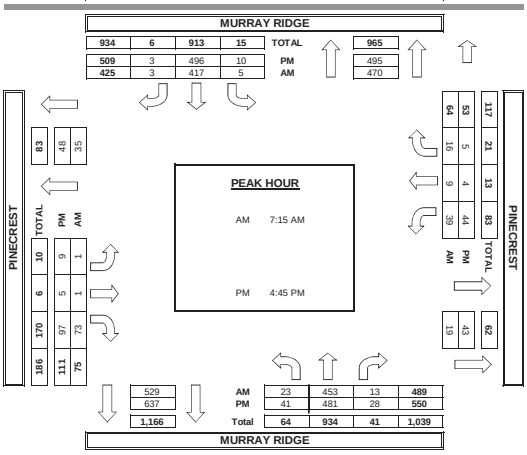

INTERSECTION TURNING MOVEMENT COUNTS

PREPARED BY: PACIFIC TECHNICAL DATA

DATE:	LOCATION:	MISSION VALLEY	PROJECT #:	PTD13-0614-01
6/12/13	NORTH & SOUTH:	MISSION CENTER	LOCATION #:	2
WEDNESDAY	EAST & WEST:	WESTSIDE DRIVE	CONTROL:	SIGNAL

NOTES:

AM / PM / MD / OTHER / OTHER — ▲ N, ◄ W, E ►, S ▼

		NORTHBOUND MISSION CENTER			SOUTHBOUND MISSION CENTER			EASTBOUND WESTSIDE DRIVE			WESTBOUND WESTSIDE DRIVE				U-TURNS				
	LANES:	NL 2	NT 2	NR 0	SL 1	ST 2	SR 0	EL 1	ET 1	ER 0	WL 0	WT 1	WR 0	TOTAL	NB X	SB X	EB X	WB X	TTL
AM	7:00 AM	39	78	2	0	27	16	4	1	29	17	0	4	217					0
	7:15 AM	52	107	3	1	34	13	8	0	24	18	1	2	263					0
	7:30 AM	43	111	5	0	78	10	5	1	36	15	3	3	310					0
	7:45 AM	46	134	2	0	67	15	14	3	21	10	3	2	317					0
	8:00 AM	59	116	4	0	69	16	7	2	33	13	2	1	322					0
	8:15 AM	39	104	5	0	78	10	9	0	39	10	4	1	299					0
	8:30 AM	42	68	4	0	59	11	5	0	25	14	2	0	230					0
	8:45 AM	37	66	5	0	52	12	7	0	22	13	1	2	217					0
	VOLUMES	357	784	30	1	464	103	59	7	229	110	16	15	2,175	0	0	0	0	0
	APPROACH %	30%	67%	3%	0%	82%	18%	20%	2%	78%	78%	11%	11%						
	APP/DEPART	1,171	/	858	568	/	803	295	/	38	141	/	476	0					
	BEGIN PEAK HR		7:30 AM																
	VOLUMES	187	465	16	0	292	51	35	6	129	48	12	7	1,248					
	APPROACH %	28%	70%	2%	0%	85%	15%	21%	4%	76%	72%	18%	10%						
	PEAK HR FACTOR		0.918			0.974			0.885			0.798		0.969					
	APP/DEPART	668	/	507	343	/	469	170	/	22	67	/	250	0					
PM	4:00 PM	48	109	14	1	118	16	21	2	75	8	0	0	412					0
	4:15 PM	69	96	12	2	131	12	16	1	65	14	1	0	419					0
	4:30 PM	70	112	13	0	107	16	15	1	68	2	1	0	405					0
	4:45 PM	62	103	12	2	135	20	16	2	70	6	4	1	433					0
	5:00 PM	70	100	17	0	155	13	22	4	76	11	2	2	472					0
	5:15 PM	52	130	8	3	124	16	16	3	65	4	1	1	423					0
	5:30 PM	87	116	20	1	120	2	13	3	90	12	0	1	465					0
	5:45 PM	72	107	22	0	103	2	20	4	88	11	1	1	431					0
	VOLUMES	530	873	118	9	993	97	139	20	597	68	10	6	3,460	0	0	0	0	0
	APPROACH %	35%	57%	8%	1%	90%	9%	18%	3%	79%	81%	12%	7%						
	APP/DEPART	1,521	/	1,018	1,099	/	1,658	756	/	147	84	/	637	0					
	BEGIN PEAK HR		4:45 PM																
	VOLUMES	271	449	57	6	534	51	67	12	301	33	7	5	1,793					
	APPROACH %	35%	58%	7%	1%	90%	9%	18%	3%	79%	73%	16%	11%						
	PEAK HR FACTOR		0.871			0.879			0.896			0.750		0.950					
	APP/DEPART	777	/	521	591	/	868	380	/	75	45	/	329	0					

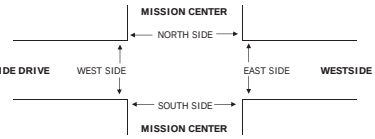

		PEDESTRIAN CROSSINGS					PEDESTRIAN ACTIVATIONS					BICYCLE CROSSINGS				
		N SIDE	S SIDE	E SIDE	W SIDE	TOTAL	N SIDE	S SIDE	E SIDE	W SIDE	TOTAL	NS	SS	ES	WS	TOTAL
AM	7:00 AM	3	1	6	5	15					0					0
	7:15 AM	3		1	2	6					0					0
	7:30 AM			1	1	2					0					0
	7:45 AM	2		3		5					0					0
	8:00 AM	3				3					0					0
	8:15 AM					0					0					0
	8:30 AM	1			1	2					0					0
	8:45 AM	1		2		3					0					0
	TOTAL	13	1	13	9	36	0	0	0	0	0	0	0	0	0	0
PM	4:00 PM	4		1	2	7					0					0
	4:15 PM	1		1	1	3					0					0
	4:30 PM			1	1	2					0					0
	4:45 PM	6		5	1	12					0					0
	5:00 PM					0					0					0
	5:15 PM	1		2		3					0					0
	5:30 PM				1	1					0					0
	5:45 PM	2		1	1	4					0					0
	TOTAL	14	0	11	7	32	0	0	0	0	0	0	0	0	0	0

PACIFIC TECHNICAL DATA

TURNING MOVEMENT COUNTS

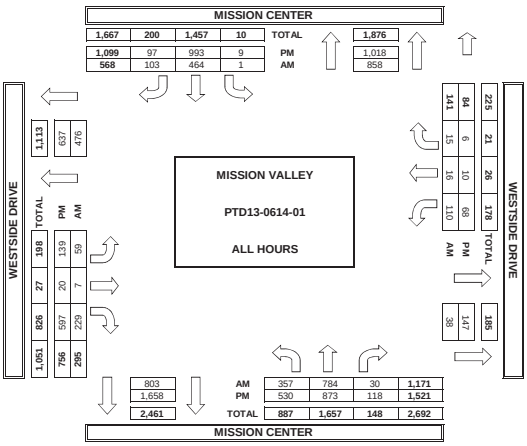

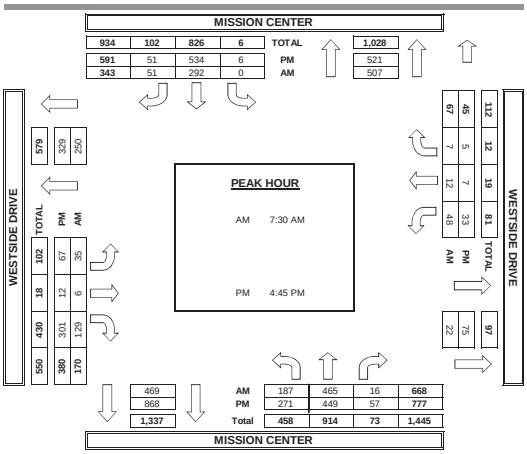

INTERSECTION TURNING MOVEMENT COUNTS

PREPARED BY: PACIFIC TECHNICAL DATA

DATE:	LOCATION:	KEARNY MESA	PROJECT #:	PTD13-0531-01
5/30/13	NORTH & SOUTH:	SANDROCK	LOCATION #:	2
THURSDAY	EAST & WEST:	MURRAY RIDGE	CONTROL:	SIGNAL

NOTES:

AM / PM / MD / OTHER / OTHER — ▲ N, ◄ W, E ►, S ▼

		NORTHBOUND SANDROCK			SOUTHBOUND SANDROCK			EASTBOUND MURRAY RIDGE			WESTBOUND MURRAY RIDGE				U-TURNS				
	LANES:	NL 0	NT 2	NR 0	SL 0	ST 2	SR 0	EL 1	ET 1	ER 1	WL 0	WT 1	WR 0	TOTAL	NB X	SB X	EB X	WB X	TTL
AM	7:00 AM	16	50	4	12	29	19	42	13	14	2	34	13	248		1			1
	7:15 AM	2	80	1	4	25	41	44	22	14	3	27	21	284		1			1
	7:30 AM	18	59	8	15	27	19	82	21	14	1	39	30	333					0
	7:45 AM	21	87	4	15	29	26	67	25	13	7	35	28	357					0
	8:00 AM	21	78	5	6	31	27	61	16	13	2	26	29	315					0
	8:15 AM	19	65	7	6	32	19	54	9	17	2	16	24	270					0
	8:30 AM	23	68	6	11	58	31	62	10	25	2	20	24	340					0
	8:45 AM	12	83	4	12	52	14	43	6	13	4	11	14	268	2				2
	VOLUMES	132	570	39	81	283	196	455	122	123	23	208	183	2,415	2	2	0	0	4
	APPROACH %	18%	77%	5%	14%	51%	35%	65%	17%	18%	6%	50%	44%						
	APP/DEPART	741	/	1,208	560	/	429	700	/	242	414	/	536	0					
	BEGIN PEAK HR		7:15 AM																
	VOLUMES	62	304	18	40	112	113	254	84	54	13	127	108	1,289					
	APPROACH %	16%	79%	5%	15%	42%	43%	65%	21%	14%	5%	51%	44%						
	PEAK HR FACTOR		0.857			0.946			0.838			0.886		0.903					
	APP/DEPART	384	/	666	265	/	179	392	/	142	248	/	302	0					
PM	4:00 PM	16	39	3	9	65	63	36	21	22	4	15	14	307		2			2
	4:15 PM	16	21	5	21	68	45	33	23	38	3	16	14	303		1			1
	4:30 PM	17	35	3	20	112	74	30	26	19	5	14	14	369					0
	4:45 PM	19	49	6	21	100	69	45	25	23	3	16	15	391					0
	5:00 PM	9	35	8	17	128	106	33	20	22	7	20	10	415		5			5
	5:15 PM	19	39	3	12	114	67	50	31	24	7	29	6	401		1			1
	5:30 PM	12	47	5	19	82	93	32	19	27	4	24	11	375		3			3
	5:45 PM	19	40	7	10	94	65	33	22	24	4	19	8	345		1			1
	VOLUMES	127	305	40	129	763	582	292	187	199	37	153	92	2,906	0	13	0	0	13
	APPROACH %	27%	65%	8%	9%	52%	39%	43%	28%	29%	13%	54%	33%						
	APP/DEPART	472	/	689	1,474	/	999	678	/	356	282	/	862	0					
	BEGIN PEAK HR		4:45 PM																
	VOLUMES	59	170	22	69	424	335	160	95	96	21	89	42	1,582					
	APPROACH %	24%	68%	9%	8%	51%	40%	46%	27%	27%	14%	59%	28%						
	PEAK HR FACTOR		0.848			0.825			0.836			0.905		0.953					
	APP/DEPART	251	/	372	828	/	541	351	/	186	152	/	483	0					

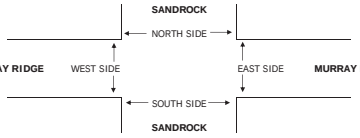

		PEDESTRIAN CROSSINGS					PEDESTRIAN ACTIVATIONS					BICYCLE CROSSINGS				
		N SIDE	S SIDE	E SIDE	W SIDE	TOTAL	N SIDE	S SIDE	E SIDE	W SIDE	TOTAL	NS	SS	ES	WS	TOTAL
AM	7:00 AM		2		2	4					0					0
	7:15 AM		1			1					0					0
	7:30 AM	1				1					0					0
	7:45 AM	2	3			5					0					0
	8:00 AM		1	8		9					0					0
	8:15 AM	6	2	2		10					0					0
	8:30 AM	2	1		3	6					0					0
	8:45 AM		1			1					0					0
	TOTAL	11	11	10	5	37	0	0	0	0	0	0	0	0	0	0
PM	4:00 PM	3	1	2	8	14					0					0
	4:15 PM	3	2		5	10					0					0
	4:30 PM		1		1	2					0					0
	4:45 PM	1				1					0					0
	5:00 PM				3	3					0					0
	5:15 PM	1	1		1	3					0					0
	5:30 PM					0					0					0
	5:45 PM		1		3	4					0					0
	TOTAL	8	6	2	21	37	0	0	0	0	0	0	0	0	0	0

PACIFIC TECHNICAL DATA

TURNING MOVEMENT COUNTS

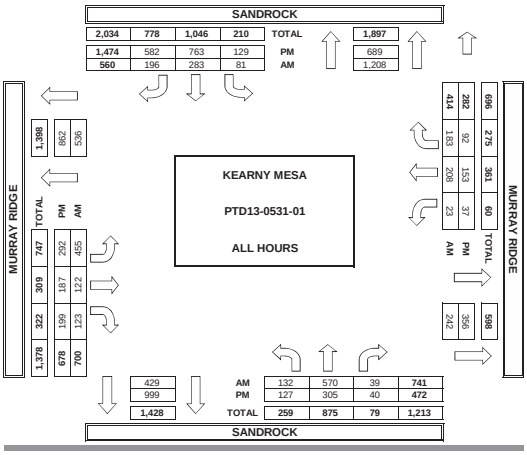

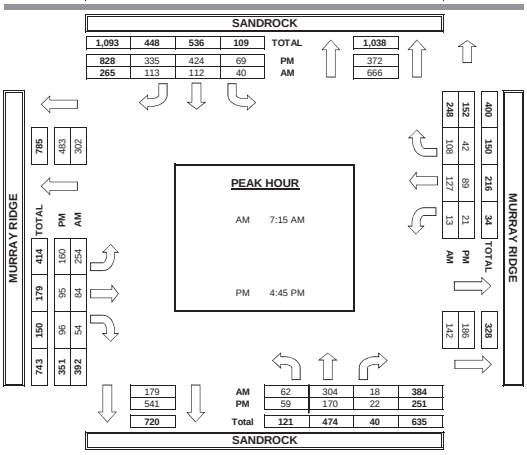

INTERSECTION TURNING MOVEMENT COUNTS

PREPARED BY: PACIFIC TECHNICAL DATA

DATE:	LOCATION:	MISSION VALLEY	PROJECT #:	PTD13-0614-01
6/12/13	NORTH & SOUTH:	MISSION CENTER	LOCATION #:	3
WEDNESDAY	EAST & WEST:	MISSION CENTER CT	CONTROL:	SIGNAL

NOTES:

AM / PM / MD / OTHER / OTHER — ▲ N, ◄ W, E ►, S ▼

		NORTHBOUND MISSION CENTER			SOUTHBOUND MISSION CENTER			EASTBOUND MISSION CENTER CT			WESTBOUND MISSION CENTER CT				U-TURNS				
	LANES:	NL 1	NT 2	NR 0	SL 1	ST 2	SR 0	EL 0	ET 1	ER 0	WL 0	WT 1	WR 0	TOTAL	NB X	SB X	EB X	WB X	TTL
AM	7:00 AM	5	61	10	4	40	5	4	1	2	9	0	21	162					0
	7:15 AM	10	78	3	10	41	10	3	0	1	13	0	31	200					0
	7:30 AM	11	64	4	10	70	12	4	0	3	21	0	34	233					0
	7:45 AM	14	90	7	12	65	17	4	0	4	12	2	22	249					0
	8:00 AM	18	86	7	11	81	25	5	0	7	14	1	18	273					0
	8:15 AM	9	80	7	28	68	18	9	0	5	19	2	23	268					0
	8:30 AM	12	90	8	12	80	17	5	2	3	21	0	20	270					0
	8:45 AM	22	85	5	14	80	30	6	1	5	13	1	23	285					0
	VOLUMES	101	634	51	101	525	134	40	4	30	122	6	192	1,940	0	0	0	0	0
	APPROACH %	13%	81%	6%	13%	69%	18%	54%	5%	41%	38%	2%	60%						
	APP/DEPART	786	/	866	760	/	677	74	/	156	320	/	241	0					
	BEGIN PEAK HR		8:00 AM																
	VOLUMES	61	341	27	65	309	90	25	3	20	67	4	84	1,096					
	APPROACH %	14%	79%	6%	14%	67%	19%	52%	6%	42%	43%	3%	54%						
	PEAK HR FACTOR		0.958			0.935			0.857			0.881		0.961					
	APP/DEPART	429	/	450	464	/	396	48	/	95	155	/	155	0					
PM	4:00 PM	13	160	14	25	140	15	34	3	18	12	2	16	452					0
	4:15 PM	14	130	16	32	152	11	16	2	15	19	1	15	423					0
	4:30 PM	20	172	17	27	135	12	22	1	19	17	1	13	456					0
	4:45 PM	18	161	14	26	169	14	10	2	30	21	1	21	487					0
	5:00 PM	15	177	20	40	178	9	24	1	32	24	1	27	548					0
	5:15 PM	24	164	19	42	161	19	11	3	32	19	1	19	514					0
	5:30 PM	12	203	25	44	170	7	10	0	29	26	0	32	558					0
	5:45 PM	13	181	15	28	148	20	16	0	18	18	1	19	477					0
	VOLUMES	129	1,348	140	264	1,253	107	143	12	193	156	8	162	3,915	0	0	0	0	0
	APPROACH %	8%	83%	9%	16%	77%	7%	41%	3%	55%	48%	2%	50%						
	APP/DEPART	1,617	/	1,653	1,624	/	1,602	348	/	416	326	/	244	0					
	BEGIN PEAK HR		4:45 PM																
	VOLUMES	69	705	78	152	678	49	55	6	123	90	3	99	2,107					
	APPROACH %	8%	83%	9%	17%	77%	6%	30%	3%	67%	47%	2%	52%						
	PEAK HR FACTOR		0.888			0.968			0.807			0.828		0.944					
	APP/DEPART	852	/	859	879	/	891	184	/	236	192	/	121	0					

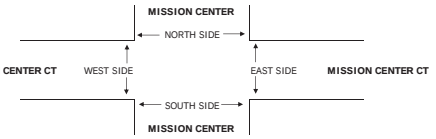

		PEDESTRIAN CROSSINGS					PEDESTRIAN ACTIVATIONS					BICYCLE CROSSINGS				
		N SIDE	S SIDE	E SIDE	W SIDE	TOTAL	N SIDE	S SIDE	E SIDE	W SIDE	TOTAL	NS	SS	ES	WS	TOTAL
AM	7:00 AM	1			5	6					0					0
	7:15 AM	1	1	1	3	6					0					0
	7:30 AM		1	2	1	4					0					0
	7:45 AM	1	2	1	1	5					0					0
	8:00 AM					0					0					0
	8:15 AM		1			1					0					0
	8:30 AM	1	1	2	1	5					0					0
	8:45 AM			1	3	4					0					0
	TOTAL	4	6	7	14	31	0	0	0	0	0	0	0	0	0	0
PM	4:00 PM	1		2	2	5					0					0
	4:15 PM		2	4		6					0					0
	4:30 PM		4	4		8					0					0
	4:45 PM		1	2	2	5					0					0
	5:00 PM	1	1	3	3	8					0					0
	5:15 PM	2		1	2	5					0					0
	5:30 PM			2	2	4					0					0
	5:45 PM	1		1		2					0					0
	TOTAL	5	8	19	11	43	0	0	0	0	0	0	0	0	0	0

PACIFIC TECHNICAL DATA

TURNING MOVEMENT COUNTS

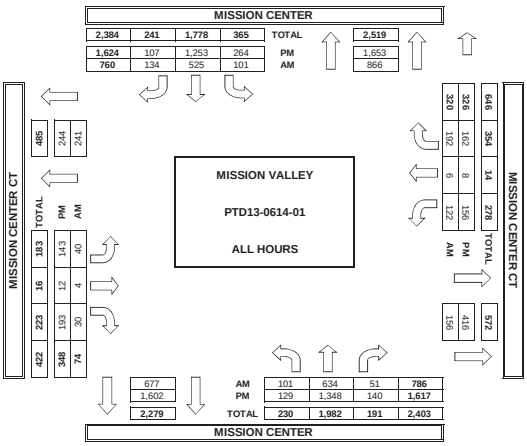

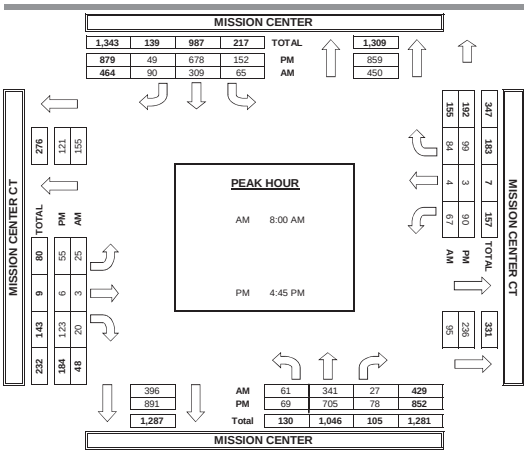

INTERSECTION TURNING MOVEMENT COUNTS

PREPARED BY: PACIFIC TECHNICAL DATA

DATE:	LOCATION:	KEARNY MESA	PROJECT #:	PTD13-0531-01
5/30/13	NORTH & SOUTH:	SANDROCK	LOCATION #:	3
THURSDAY	EAST & WEST:	AREO	CONTROL:	SIGNAL

NOTES:

AM / PM / MD / OTHER / OTHER — ▲ N, ◄ W, E ►, S ▼

		NORTHBOUND SANDROCK			SOUTHBOUND SANDROCK			EASTBOUND AREO			WESTBOUND AREO				U-TURNS				
	LANES:	NL 1.5	NT 0.5	NR 1	SL 0	ST 2	SR 0	EL 1	ET 2	ER 1	WL 1	WT 2	WR 0	TOTAL	NB X	SB X	EB X	WB X	TTL
AM	7:00 AM	73	10	34	4	1	1	2	63	32	14	103	18	355		1			1
	7:15 AM	93	10	26	3	3	2	5	96	20	27	125	20	430	1	1			2
	7:30 AM	103	19	44	4	1	0	10	101	40	21	123	14	480		4			4
	7:45 AM	124	19	51	1	2	4	14	113	36	19	153	18	554		1			1
	8:00 AM	131	7	43	1	1	1	7	119	34	19	130	16	509					0
	8:15 AM	110	8	32	6	2	7	11	99	25	21	162	12	495		4	1		5
	8:30 AM	102	3	31	2	1	5	4	133	54	27	159	16	537		4	3		7
	8:45 AM	82	9	40	3	6	7	4	126	44	29	111	4	465		6	3		9
	VOLUMES	818	85	301	24	17	27	57	850	285	177	1,066	118	3,825	1	0	21	7	29
	APPROACH %	68%	7%	25%	35%	25%	40%	5%	71%	24%	13%	78%	9%						
	APP/DEPART	1,204	/	260	68	/	479	1,192	/	1,175	1,361	/	1,911	0					
	BEGIN PEAK HR		7:45 AM																
	VOLUMES	467	37	157	10	6	17	36	464	149	86	604	62	2,095					
	APPROACH %	71%	6%	24%	30%	18%	52%	6%	71%	23%	11%	80%	8%						
	PEAK HR FACTOR		0.852			0.550			0.849			0.931		0.945					
	APP/DEPART	661	/	135	33	/	241	649	/	631	752	/	1,088	0					
PM	4:00 PM	73	3	33	25	10	12	3	146	80	53	122	4	564	2		7		9
	4:15 PM	50	3	27	15	7	11	3	139	98	54	130	3	540	2		6		8
	4:30 PM	51	3	28	19	19	13	7	170	114	49	164	5	642	5		6		11
	4:45 PM	65	7	48	9	5	6	6	172	113	60	144	7	642	4		14	3	21
	5:00 PM	59	2	32	14	27	6	7	157	124	61	162	4	655	12		15		27
	5:15 PM	67	5	38	5	7	7	4	178	128	54	148	3	644			10	3	13
	5:30 PM	53	1	33	16	16	3	12	181	103	64	110	9	601	4		7	2	13
	5:45 PM	56	3	26	13	6	6	14	149	109	53	121	2	558	1		4	1	6
	VOLUMES	474	27	265	116	97	64	56	1,292	869	448	1,101	37	4,846	30	0	69	9	108
	APPROACH %	62%	4%	35%	42%	35%	23%	3%	58%	39%	28%	69%	2%						
	APP/DEPART	766	/	120	277	/	1,414	2,217	/	1,673	1,586	/	1,639	0					
	BEGIN PEAK HR		4:30 PM																
	VOLUMES	242	17	146	47	58	32	24	677	479	224	618	19	2,583					
	APPROACH %	60%	4%	36%	34%	42%	23%	2%	57%	41%	26%	72%	2%						
	PEAK HR FACTOR		0.844			0.672			0.952			0.948		0.986					
	APP/DEPART	405	/	60	137	/	761	1,180	/	870	861	/	892	0					

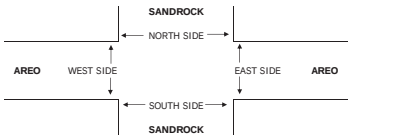

		PEDESTRIAN CROSSINGS					PEDESTRIAN ACTIVATIONS					BICYCLE CROSSINGS				
		N SIDE	S SIDE	E SIDE	W SIDE	TOTAL	N SIDE	S SIDE	E SIDE	W SIDE	TOTAL	NS	SS	ES	WS	TOTAL
AM	7:00 AM			1		1					0					0
	7:15 AM			1		1					0					0
	7:30 AM			1		1					0					0
	7:45 AM					0					0					0
	8:00 AM					0					0					0
	8:15 AM			1		1					0					0
	8:30 AM					0					0					0
	8:45 AM					0					0					0
	TOTAL	0	0	4	0	4	0	0	0	0	0	0	0	0	0	0
PM	4:00 PM					0					0					0
	4:15 PM	1		1		2					0					0
	4:30 PM	1		1		2					0					0
	4:45 PM					0					0					0
	5:00 PM			1	1	2					0					0
	5:15 PM				1	1					0					0
	5:30 PM	1	2	2		5					0					0
	5:45 PM	1				1					0					0
	TOTAL	4	2	5	2	13	0	0	0	0	0	0	0	0	0	0

PACIFIC TECHNICAL DATA

TURNING MOVEMENT COUNTS

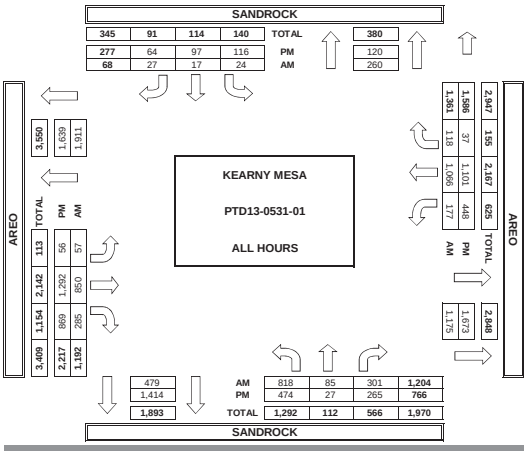

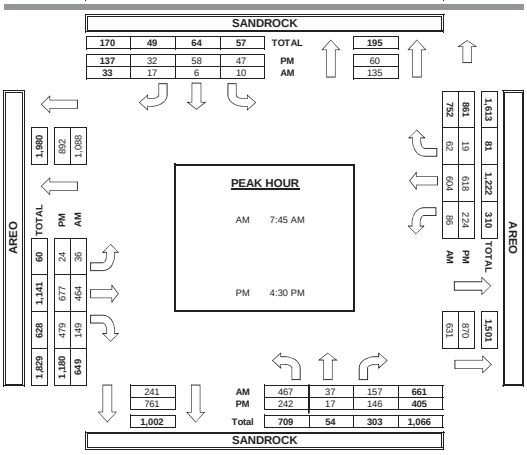

INTERSECTION TURNING MOVEMENT COUNTS

PREPARED BY: PACIFIC TECHNICAL DATA

DATE:	LOCATION:	MISSION VALLEY	PROJECT #:	PTD13-0614-01
6/12/13	NORTH & SOUTH:	RIO BONITA WAY	LOCATION #:	4
WEDNESDAY	EAST & WEST:	RIO SAN DIEGO	CONTROL:	SIGNAL

NOTES:

AM / PM / MD / OTHER / OTHER — ▲ N, ◄ W, E ►, S ▼

		NORTHBOUND RIO BONITA WAY			SOUTHBOUND RIO BONITA WAY			EASTBOUND RIO SAN DIEGO			WESTBOUND RIO SAN DIEGO				U-TURNS				
	LANES:	NL 0	NT 1	NR 0	SL 1	ST 1	SR 0	EL 1	ET 2	ER 0	WL 1	WT 2	WR 0	TOTAL	NB X	SB X	EB X	WB X	TTL
AM	7:00 AM	2	1	0	2	3	23	12	47	9	3	65	2	169					0
	7:15 AM	3	2	2	4	5	12	17	69	9	2	56	2	183					0
	7:30 AM	2	1	0	4	2	12	11	64	7	1	73	2	179					0
	7:45 AM	0	0	0	12	2	14	13	104	18	13	69	3	248					0
	8:00 AM	2	0	2	4	6	12	8	70	17	4	52	2	179					0
	8:15 AM	4	1	0	13	6	13	19	62	17	6	63	2	206					0
	8:30 AM	3	0	0	4	8	3	9	66	4	5	62	3	167					0
	8:45 AM	6	1	2	4	5	11	3	50	11	8	45	2	148					0
	VOLUMES	22	6	6	47	37	100	92	532	92	42	485	18	1,479	0	0	0	0	0
	APPROACH %	65%	18%	18%	26%	20%	54%	13%	74%	13%	8%	89%	3%						
	APP/DEPART	34	/	116	184	/	171	716	/	585	545	/	607	0					
	BEGIN PEAK HR		7:30 AM																
	VOLUMES	8	2	2	33	16	51	51	300	59	24	257	9	812					
	APPROACH %	67%	17%	17%	33%	16%	51%	12%	73%	14%	8%	89%	3%						
	PEAK HR FACTOR		0.600			0.781			0.759			0.853		0.819					
	APP/DEPART	12	/	62	100	/	99	410	/	335	290	/	316	0					
PM	4:00 PM	23	7	12	5	0	20	8	102	0	2	126	4	309					0
	4:15 PM	11	3	4	4	0	12	5	71	3	1	119	3	236					0
	4:30 PM	21	6	7	8	0	33	21	131	2	0	123	6	358					0
	4:45 PM	16	7	9	9	0	21	8	102	6	2	137	1	318					0
	5:00 PM	45	7	10	19	0	39	10	111	1	1	166	6	415					0
	5:15 PM	29	6	4	7	2	15	2	97	3	3	133	3	304					0
	5:30 PM	20	4	4	10	0	22	6	101	2	2	111	4	286					0
	5:45 PM	19	7	1	7	1	17	7	98	4	3	116	4	284					0
	VOLUMES	184	47	51	69	3	179	67	813	21	14	1,031	31	2,510	0	0	0	0	0
	APPROACH %	65%	17%	18%	27%	1%	71%	7%	90%	2%	1%	96%	3%						
	APP/DEPART	282	/	145	251	/	38	901	/	933	1,076	/	1,394	0					
	BEGIN PEAK HR		4:30 PM																
	VOLUMES	111	26	30	43	2	108	41	441	12	6	559	16	1,395					
	APPROACH %	66%	16%	18%	28%	1%	71%	8%	89%	2%	1%	96%	3%						
	PEAK HR FACTOR		0.673			0.659			0.802			0.840		0.840					
	APP/DEPART	167	/	83	153	/	20	494	/	514	581	/	778	0					

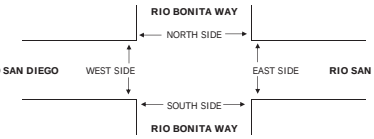

		PEDESTRIAN CROSSINGS					PEDESTRIAN ACTIVATIONS					BICYCLE CROSSINGS				
		N SIDE	S SIDE	E SIDE	W SIDE	TOTAL	N SIDE	S SIDE	E SIDE	W SIDE	TOTAL	NS	SS	ES	WS	TOTAL
AM	7:00 AM	3	5	1		9					0					0
	7:15 AM		1			1					0					0
	7:30 AM	2	2	2		6					0					0
	7:45 AM			1	1	2					0					0
	8:00 AM	1	1	2	1	5					0					0
	8:15 AM		2	2		4					0					0
	8:30 AM	1	3	1	1	6					0					0
	8:45 AM	3	1			4					0					0
	TOTAL	10	15	9	3	37	0	0	0	0	0	0	0	0	0	0
PM	4:00 PM	2	2	1	2	7					0					0
	4:15 PM	3	1		1	5					0					0
	4:30 PM	2	4			6					0					0
	4:45 PM		3			3					0					0
	5:00 PM	5	2	4		11					0					0
	5:15 PM	1	3	1		5					0					0
	5:30 PM	1	2		1	4					0					0
	5:45 PM	2	3	1		6					0					0
	TOTAL	16	20	7	4	47	0	0	0	0	0	0	0	0	0	0

PACIFIC TECHNICAL DATA

TURNING MOVEMENT COUNTS

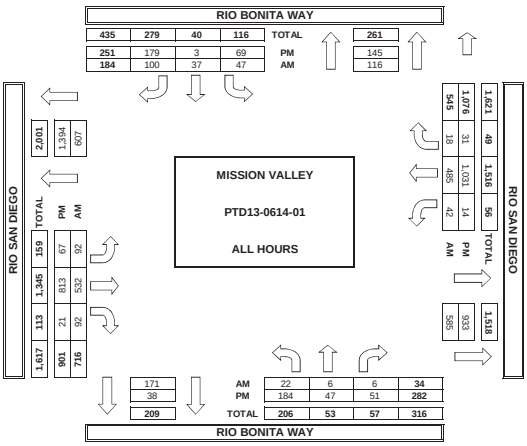

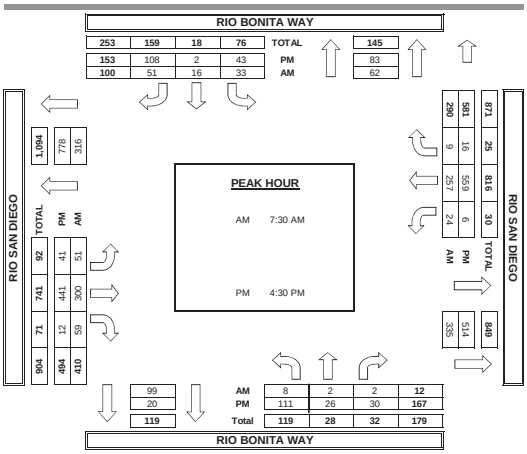

INTERSECTION TURNING MOVEMENT COUNTS

PREPARED BY: PACIFIC TECHNICAL DATA

DATE:	LOCATION:	MISSION VALLEY	PROJECT #:	PTD13-0614-01
6/25/13	NORTH & SOUTH:	MISSION CENTER	LOCATION #:	5
TUESDAY	EAST & WEST:	MISSION VALLEY	CONTROL:	SIGNAL

NOTES:

AM / PM / MD / OTHER / OTHER — ▲ N, ◄ W, E ►, S ▼

		NORTHBOUND MISSION CENTER			SOUTHBOUND MISSION CENTER			EASTBOUND MISSION VALLEY			WESTBOUND MISSION VALLEY				U-TURNS				
	LANES:	NL 1	NT 2	NR 0	SL 1	ST 2	SR 0	EL 1	ET 1	ER 1	WL 1	WT 1	WR 0	TOTAL	NB X	SB X	EB X	WB X	TTL
AM	7:00 AM	40	33	5	2	41	40	3	0	4	6	2	4	180					0
	7:15 AM	45	42	9	3	45	48	5	0	5	7	2	5	216					0
	7:30 AM	62	21	9	3	68	49	7	0	5	14	1	6	245					0
	7:45 AM	93	23	7	2	33	69	9	0	10	21	3	5	275					0
	8:00 AM	64	24	5	1	52	56	14	0	13	9	0	1	239					0
	8:15 AM	60	21	6	2	49	56	11	0	21	14	0	6	246					0
	8:30 AM	66	28	7	3	51	55	8	0	18	12	1	3	252					0
	8:45 AM	74	22	8	2	42	50	11	0	21	16	0	1	247					0
	VOLUMES	504	214	56	18	381	423	68	0	97	99	9	31	1,900	0	0	0	0	0
	APPROACH %	65%	28%	7%	2%	46%	51%	41%	0%	59%	71%	6%	22%						
	APP/DEPART	774	/	313	822	/	577	165	/	74	139	/	936	0					
	BEGIN PEAK HR		7:45 AM																
	VOLUMES	283	96	25	8	185	236	42	0	62	56	4	15	1,012					
	APPROACH %	70%	24%	6%	2%	43%	55%	40%	0%	60%	75%	5%	20%						
	PEAK HR FACTOR		0.821			0.984			0.813			0.647		0.920					
	APP/DEPART	404	/	153	429	/	303	104	/	33	75	/	523	0					
PM	4:00 PM	15	73	4	2	47	18	57	1	66	9	1	6	299					0
	4:15 PM	24	74	4	3	63	13	55	1	52	20	0	7	316					0
	4:30 PM	17	92	10	2	63	14	73	0	74	7	1	1	354					0
	4:45 PM	25	83	9	2	52	8	56	3	56	14	1	2	311					0
	5:00 PM	24	78	8	2	76	6	102	2	83	10	0	1	392					0
	5:15 PM	21	84	10	2	89	7	51	0	56	11	0	5	336					0
	5:30 PM	22	80	8	3	77	9	62	1	62	12	1	3	340					0
	5:45 PM	23	77	12	2	70	9	55	1	58	7	1	4	319					0
	VOLUMES	171	641	65	18	537	84	511	9	507	90	5	29	2,667	0	0	0	0	0
	APPROACH %	19%	73%	7%	3%	84%	13%	50%	1%	49%	73%	4%	23%						
	APP/DEPART	877	/	1,181	639	/	1,134	1,027	/	92	124	/	260	0					
	BEGIN PEAK HR		4:30 PM																
	VOLUMES	87	337	37	8	280	35	282	5	269	42	2	9	1,393					
	APPROACH %	19%	73%	8%	2%	87%	11%	51%	1%	48%	79%	4%	17%						
	PEAK HR FACTOR		0.968			0.824			0.743			0.779		0.888					
	APP/DEPART	461	/	628	323	/	591	556	/	50	53	/	124	0					

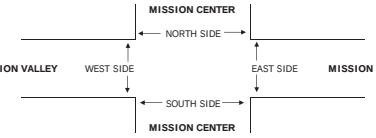

		PEDESTRIAN CROSSINGS					PEDESTRIAN ACTIVATIONS					BICYCLE CROSSINGS				
		N SIDE	S SIDE	E SIDE	W SIDE	TOTAL	N SIDE	S SIDE	E SIDE	W SIDE	TOTAL	NS	SS	ES	WS	TOTAL
AM	7:00 AM					0					0					0
	7:15 AM					0					0					0
	7:30 AM			1		1					0					0
	7:45 AM					0					0					0
	8:00 AM			1		1					0					0
	8:15 AM					0					0					0
	8:30 AM			1		1					0					0
	8:45 AM			2		2					0					0
	TOTAL	0	0	5	0	5	0	0	0	0	0	0	0	0	0	0
PM	4:00 PM					0					0					0
	4:15 PM					0					0					0
	4:30 PM	2		1	1	4					0					0
	4:45 PM	1			3	4					0					0
	5:00 PM	2		2		4					0					0
	5:15 PM				2	2					0					0
	5:30 PM			1	2	3					0					0
	5:45 PM	1		1	1	3					0					0
	TOTAL	6	0	5	9	20	0	0	0	0	0	0	0	0	0	0

PACIFIC TECHNICAL DATA

TURNING MOVEMENT COUNTS

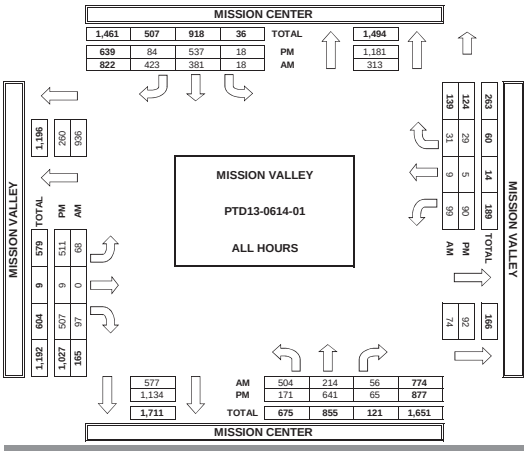

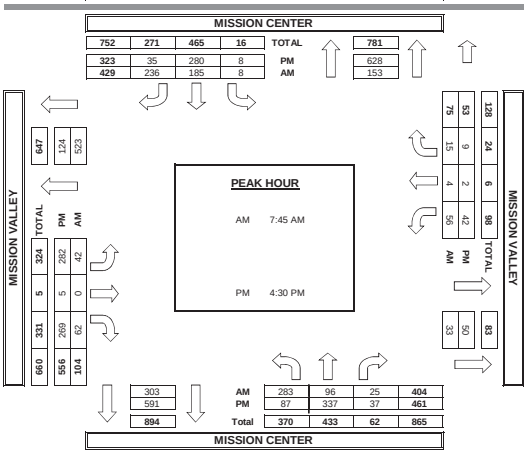

-SEGMENTS-

MetroCount Traffic Executive
Event Counts

1107 -- English (ENU)

Datasets:

Site:	**[1164.04] FRIARS RD (MISSION CENTER RD-QUALCOMM WAY) EASTBOUND**
Input A:	2 - East bound. - Lane= 0, Added to totals. (/2.000)
Input B:	0 - Unused or unknown. - Lane= 0, Excluded from totals.
Survey Duration:	7:42 Sunday, June 12, 2011 => 9:01 Wednesday, June 15, 2011
File:	1164.04.E15Jun2011.EC0 (Regular)
Data type:	Axle sensors - Separate (Count)

Profile:

Filter time: **0:00 Tuesday, June 14, 2011 => 0:00 Wednesday, June 15, 2011**

*** Tuesday, June 14, 2011=17953, 15 minute drops**

0000	0100	0200	0300	0400	0500	0600	0700	0800	0900	1000	1100	1200	1300	1400	1500	1600	1700	1800	1900	2000	2100	2200	2300	
88	**52**	**28**	**39**	**39**	**98**	**359**	**716**	**710**	**697**	**963**	**1050**	**1361**	**1327**	**1228**	**1309**	**1581**	**1841**	**1401**	**1073**	**823**	**581**	**383**	**213**	
34	19	11	12	13	10	55	122	172	156	232	224	**322**	364	300	337	394	474	380	279	195	174	127	62	-
20	22	5	12	6	17	76	185	192	185	264	261	**306**	336	326	319	350	467	339	282	213	138	93	62	-
23	8	6	11	6	17	103	191	176	177	212	287	**354**	301	292	306	433	478	315	272	212	141	93	40	-
11	4	6	4	14	54	126	219	171	180	256	**279**	381	327	311	348	405	423	367	242	204	129	71	50	-

AM Peak 1145 - 1245 (1260), AM PHF=0.89

MetroCount Traffic Executive
Event Counts

1108 -- English (ENU)

Datasets:

Site:	**[1164.04] FRIARS RD (MISSION CENTER RD-QUALCOMM WAY) WESTBOUND**
Input A:	4 - West bound. - Lane= 0, Added to totals. (/2.000)
Input B:	0 - Unused or unknown. - Lane= 0, Excluded from totals.
Survey Duration:	7:42 Sunday, June 12, 2011 => 8:59 Wednesday, June 15, 2011
File:	1164.04.W15Jun2011.EC0 (Regular)
Data type:	Axle sensors - Separate (Count)

Profile:

Filter time: **0:00 Tuesday, June 14, 2011 => 0:00 Wednesday, June 15, 2011**

*** Tuesday, June 14, 2011=15266, 15 minute drops**

0000	0100	0200	0300	0400	0500	0600	0700	0800	0900	1000	1100	1200	1300	1400	1500	1600	1700	1800	1900	2000	2100	2200	2300	
54	**42**	**27**	**26**	**77**	**191**	**567**	**1123**	**1058**	**727**	**794**	**999**	**1177**	**1117**	**982**	**1065**	**1154**	**1161**	**903**	**720**	**607**	**359**	**212**	**132**	
18	8	7	2	9	35	104	221	**291**	205	170	213	244	307	253	258	291	293	239	195	169	104	73	48	-
11	16	7	8	12	37	143	280	**283**	157	184	249	330	296	238	243	293	315	211	193	126	97	59	34	-
12	13	3	7	29	43	157	**285**	265	168	208	252	282	253	247	315	272	296	221	171	162	78	49	27	-
14	5	10	9	27	76	164	**337**	220	198	232	285	321	262	239	249	300	258	232	163	151	80	31	26	-

AM Peak 0730 - 0830 (1195), AM PHF=0.89

MetroCount Traffic Executive
Event Counts

1110 -- English (ENU)

Datasets:

Site:	**[1164.05] FRIARS RD (QUALCOMM WAY-FENTON PKWY) EASTBOUND**
Input A:	4 - West bound. - Lane= 0, Excluded from totals.
Input B:	2 - East bound. - Lane= 0, Added to totals. (/2.000)
Survey Duration:	7:25 Sunday, June 12, 2011 => 8:38 Wednesday, June 15, 2011
File:	1164.05.15Jun2011.EC0 (Regular)
Data type:	Axle sensors - Separate (Count)

Profile:

Filter time: **0:00 Tuesday, June 14, 2011 => 0:00 Wednesday, June 15, 2011**

*** Tuesday, June 14, 2011=18935, 15 minute drops**

0000	0100	0200	0300	0400	0500	0600	0700	0800	0900	1000	1100	1200	1300	1400	1500	1600	1700	1800	1900	2000	2100	2200	2300	
106	**63**	**38**	**44**	**38**	**75**	**240**	**519**	**605**	**633**	**939**	**1080**	**1359**	**1409**	**1368**	**1516**	**1885**	**2083**	**1538**	**1223**	**950**	**599**	**417**	**216**	
45	19	10	16	6	14	34	94	137	133	207	214	**333**	411	337	357	428	552	436	333	245	183	132	65	-
22	25	9	12	5	18	51	124	169	166	255	297	**331**	348	351	370	452	540	392	314	232	150	100	57	-
23	8	10	10	10	12	65	132	154	156	227	289	**339**	317	358	386	512	489	305	288	237	140	109	43	-
16	12	9	7	17	31	90	170	146	178	251	**280**	357	333	323	404	493	503	406	289	237	126	77	52	-

AM Peak 1145 - 1245 (1282), AM PHF=0.95

MetroCount Traffic Executive
Event Counts

1111 -- English (ENU)

Datasets:

Site:	**[1164.05] FRIARS RD (QUALCOMM WAY-FENTON PKWY) WESTBOUND**
Input A:	4 - West bound. - Lane= 0, Added to totals. (/2.000)
Input B:	2 - East bound. - Lane= 0, Excluded from totals.
Survey Duration:	7:25 Sunday, June 12, 2011 => 8:38 Wednesday, June 15, 2011
File:	1164.05.15Jun2011.EC0 (Regular)
Data type:	Axle sensors - Separate (Count)

Profile:

Filter time: **0:00 Tuesday, June 14, 2011 => 0:00 Wednesday, June 15, 2011**

*** Tuesday, June 14, 2011=15951, 15 minute drops**

0000	0100	0200	0300	0400	0500	0600	0700	0800	0900	1000	1100	1200	1300	1400	1500	1600	1700	1800	1900	2000	2100	2200	2300	
60	**43**	**23**	**37**	**70**	**238**	**621**	**1113**	**1114**	**775**	**842**	**1097**	**1191**	**1118**	**993**	**1040**	**1175**	**1224**	**998**	**862**	**643**	**376**	**190**	**113**	
21	16	6	10	10	30	127	215	**315**	206	202	214	233	298	261	243	254	305	243	229	184	116	61	44	-
15	10	8	14	10	49	129	277	**285**	169	213	267	320	300	220	237	315	344	260	217	131	96	55	29	-
10	12	4	8	24	48	172	271	**275**	192	201	306	307	272	267	299	282	299	244	222	174	92	45	24	-
14	6	6	6	26	113	193	**351**	240	209	228	311	332	249	246	263	324	277	251	195	155	72	30	17	-

AM Peak 0745 - 0845 (1225), AM PHF=0.87

MetroCount Traffic Executive
Event Counts

1113 -- English (ENU)

Datasets:
Site: **[1164.06] FRIARS RD (FENTON PKWY-NORTHSIDE DR) EASTBOUND**
Input A: 4 - West bound. - Lane= 0, Excluded from totals.
Input B: 2 - East bound. - Lane= 0, Added to totals. (/2.000)
Survey Duration: 12:37 Monday, June 13, 2011 => 8:38 Wednesday, June 15, 2011
File: 1164.06.15Jun2011.EC0 (Base)
Data type: Axle sensors - Separate (Count)

Profile:
Filter time: **0:00 Tuesday, June 14, 2011 => 0:00 Wednesday, June 15, 2011**

*** Tuesday, June 14, 2011=18433, 15 minute drops**

0000	0100	0200	0300	0400	0500	0600	0700	0800	0900	1000	1100	1200	1300	1400	1500	1600	1700	1800	1900	2000	2100	2200	2300	
115	**57**	**36**	**44**	**42**	**116**	**348**	**591**	**683**	**653**	**864**	**1079**	**1265**	**1427**	**1265**	**1482**	**1949**	**1919**	**1302**	**1113**	**898**	**591**	**402**	**196**	
47	20	9	13	6	20	66	119	162	142	181	238	**322**	431	316	339	441	542	388	309	223	176	132	62	-
28	18	9	14	5	22	71	132	186	173	239	282	**310**	332	305	347	488	493	326	259	221	161	105	37	-
25	6	8	11	10	31	95	166	164	169	219	275	**310**	312	344	402	516	449	266	287	246	124	103	53	-
15	13	11	7	21	44	117	175	173	170	227	**285**	323	352	300	394	505	437	323	259	209	131	62	44	-

AM Peak 1145 - 1245 (1227), AM PHF=0.95

MetroCount Traffic Executive
Event Counts

1112 -- English (ENU)

Datasets:
Site: **[1164.06] FRIARS RD (FENTON PKWY-NORTHSIDE DR) WESTBOUND**
Input A: 4 - West bound. - Lane= 0, Added to totals. (/2.000)
Input B: 2 - East bound. - Lane= 0, Excluded from totals.
Survey Duration: 12:37 Monday, June 13, 2011 => 8:38 Wednesday, June 15, 2011
File: 1164.06.15Jun2011.EC0 (Base)
Data type: Axle sensors - Separate (Count)

Profile:
Filter time: **0:00 Tuesday, June 14, 2011 => 0:00 Wednesday, June 15, 2011**

*** Tuesday, June 14, 2011=15549, 15 minute drops**

0000	0100	0200	0300	0400	0500	0600	0700	0800	0900	1000	1100	1200	1300	1400	1500	1600	1700	1800	1900	2000	2100	2200	2300	
79	**50**	**30**	**36**	**64**	**248**	**685**	**1273**	**1139**	**803**	**805**	**1011**	**1159**	**1043**	**913**	**1026**	**1082**	**1146**	**939**	**747**	**560**	**376**	**206**	**134**	
30	18	8	9	11	27	125	196	**340**	211	209	214	247	261	210	230	246	291	229	202	161	113	64	46	-
17	14	12	12	10	40	143	**331**	277	183	199	254	321	273	234	263	277	297	247	201	119	113	57	40	-
18	13	4	9	20	60	187	**316**	279	201	192	246	290	257	242	267	254	304	208	163	160	80	46	25	-
15	6	7	8	24	121	230	**430**	244	208	206	298	301	253	228	267	306	254	256	182	120	71	40	23	-

AM Peak 0715 - 0815 (1416), AM PHF=0.82

MetroCount Traffic Executive
Event Counts

1120 -- English (ENU)

Datasets:
Site: **[1164.10] MISSION CENTER RD (FRIARS RD-MISSION VALLEY RD) NORTHBOUND**
Input A: 1 - North bound. - Lane= 0, Added to totals. (/2.000)
Input B: 3 - South bound. - Lane= 0, Excluded from totals.
Survey Duration: 12:06 Monday, June 13, 2011 => 9:03 Wednesday, June 15, 2011
File: 1164.10.15Jun2011.EC0 (Regular)
Data type: Axle sensors - Separate (Count)

Profile:
Filter time: **0:00 Tuesday, June 14, 2011 => 0:00 Wednesday, June 15, 2011**

*** Tuesday, June 14, 2011=6695, 15 minute drops**

0000	0100	0200	0300	0400	0500	0600	0700	0800	0900	1000	1100	1200	1300	1400	1500	1600	1700	1800	1900	2000	2100	2200	2300	
27	**20**	**8**	**6**	**14**	**37**	**231**	**491**	**471**	**331**	**336**	**390**	**601**	**570**	**417**	**437**	**458**	**590**	**377**	**274**	**242**	**190**	**120**	**61**	
4	5	2	2	1	5	30	75	**124**	105	71	77	113	157	120	111	117	162	126	79	62	54	43	17	-
8	7	2	0	1	7	67	**124**	114	78	75	96	155	135	99	101	107	143	102	68	64	50	36	17	-
6	4	4	1	6	8	64	**136**	120	60	95	107	153	146	121	119	116	147	79	62	52	44	28	15	-
9	4	0	3	6	17	71	**156**	113	89	95	111	181	132	78	107	119	138	71	65	64	43	14	12	-

AM Peak 0715 - 0815 (540), AM PHF=0.86

MetroCount Traffic Executive
Event Counts

1121 -- English (ENU)

Datasets:
Site: **[1164.10] MISSION CENTER RD (FRIARS RD-MISSION VALLEY RD) SOUTHBOUND**
Input A: 1 - North bound. - Lane= 0, Excluded from totals.
Input B: 3 - South bound. - Lane= 0, Added to totals. (/2.000)
Survey Duration: 12:06 Monday, June 13, 2011 => 9:03 Wednesday, June 15, 2011
File: 1164.10.15Jun2011.EC0 (Regular)
Data type: Axle sensors - Separate (Count)

Profile:
Filter time: **0:00 Tuesday, June 14, 2011 => 0:00 Wednesday, June 15, 2011**

*** Tuesday, June 14, 2011=6671, 15 minute drops**

0000	0100	0200	0300	0400	0500	0600	0700	0800	0900	1000	1100	1200	1300	1400	1500	1600	1700	1800	1900	2000	2100	2200	2300	
24	**10**	**5**	**7**	**23**	**58**	**141**	**281**	**315**	**309**	**343**	**533**	**579**	**427**	**476**	**548**	**638**	**653**	**391**	**305**	**266**	**155**	**143**	**48**	
11	5	3	2	4	11	29	46	67	81	76	125	**175**	124	112	170	143	212	121	97	65	44	53	21	-
4	2	0	0	2	7	34	48	90	68	92	105	**128**	100	137	149	139	200	116	69	69	47	41	10	-
6	1	1	3	10	17	30	95	82	71	75	**162**	142	98	122	131	172	131	73	67	57	29	23	10	-
3	2	1	2	7	23	49	92	77	90	101	**142**	135	105	107	98	185	110	82	83	76	35	27	7	-

AM Peak 1130 - 1230 (606), AM PHF=0.87

MetroCount Traffic Executive
Event Counts

1122 -- English (ENU)

Datasets:
Site: **[1164.11] MISSION CENTER RD (MISSION VALLEY RD-MURRAY RIDGE RD) NORTHBOUND**
Input A: 1 - North bound. - Lane= 0, Added to totals. (/2.000)
Input B: 3 - South bound. - Lane= 0, Excluded from totals.
Survey Duration: 12:07 Monday, June 13, 2011 => 9:04 Wednesday, June 15, 2011
File: 1164.11.15Jun2011.EC0 (Base)
Data type: Axle sensors - Separate (Count)

Profile:
Filter time: **0:00 Tuesday, June 14, 2011 => 0:00 Wednesday, June 15, 2011**

*** Tuesday, June 14, 2011=4738, 15 minute drops**

0000	0100	0200	0300	0400	0500	0600	0700	0800	0900	1000	1100	1200	1300	1400	1500	1600	1700	1800	1900	2000	2100	2200	2300	
17	**16**	**6**	**4**	**9**	**19**	**69**	**163**	**154**	**162**	**171**	**241**	**295**	**294**	**338**	**474**	**517**	**623**	**397**	**236**	**217**	**176**	**93**	**52**	
4	3	2	0	1	5	11	33	53	36	35	68	**72**	79	86	133	130	216	136	70	64	53	38	15	-
3	5	1	0	1	3	16	44	25	37	36	43	**77**	62	64	96	116	151	106	52	51	51	20	14	-
5	4	3	1	3	3	18	46	45	40	54	69	**73**	83	112	131	146	139	88	52	44	40	21	14	-
5	4	0	3	4	8	24	40	31	49	47	**61**	73	71	78	115	125	117	67	62	59	33	15	9	-

AM Peak 1145 - 1245 (283), AM PHF=0.92

MetroCount Traffic Executive
Event Counts

1123 -- English (ENU)

Datasets:
Site: **[1164.11] MISSION CENTER RD (MISSION VALLEY RD-MURRAY RIDGE RD) SOUTHBOUND**
Input A: 1 - North bound. - Lane= 0, Excluded from totals.
Input B: 3 - South bound. - Lane= 0, Added to totals. (/2.000)
Survey Duration: 12:07 Monday, June 13, 2011 => 9:04 Wednesday, June 15, 2011
File: 1164.11.15Jun2011.EC0 (Base)
Data type: Axle sensors - Separate (Count)

Profile:
Filter time: **0:00 Tuesday, June 14, 2011 => 0:00 Wednesday, June 15, 2011**

*** Tuesday, June 14, 2011=4470, 15 minute drops**

0000	0100	0200	0300	0400	0500	0600	0700	0800	0900	1000	1100	1200	1300	1400	1500	1600	1700	1800	1900	2000	2100	2200	2300	
10	**6**	**5**	**4**	**24**	**95**	**255**	**484**	**484**	**254**	**239**	**257**	**287**	**276**	**271**	**249**	**289**	**333**	**248**	**164**	**103**	**63**	**43**	**29**	
2	2	0	1	2	12	42	78	**119**	85	52	70	64	69	58	65	75	77	77	47	22	18	14	12	-
4	1	1	0	2	20	57	80	**135**	55	62	58	69	75	95	65	70	93	69	47	35	17	10	5	-
3	1	1	3	10	22	64	**137**	117	59	54	62	67	62	59	54	67	91	47	35	24	14	5	9	-
1	2	3	0	10	41	92	**189**	113	55	71	67	87	70	59	65	77	72	55	35	22	14	14	3	-

AM Peak 0730 - 0830 (580), AM PHF=0.77

MetroCount Traffic Executive
Event Counts

1124 -- English (ENU)

Datasets:
Site: **[1164.12] MISSION CENTER RD (FRIARS RD-HAZARD CENTER DR) NORTHBOUND**
Input A: 1 - North bound. - Lane= 0, Added to totals. (/2.000)
Input B: 3 - South bound. - Lane= 0, Excluded from totals.
Survey Duration: 11:50 Monday, June 13, 2011 => 8:43 Wednesday, June 15, 2011
File: 1164.12.15Jun2011.EC0 (Regular)
Data type: Axle sensors - Separate (Count)

Profile:
Filter time: **0:00 Tuesday, June 14, 2011 => 0:00 Wednesday, June 15, 2011**

*** Tuesday, June 14, 2011=11325, 15 minute drops**

0000	0100	0200	0300	0400	0500	0600	0700	0800	0900	1000	1100	1200	1300	1400	1500	1600	1700	1800	1900	2000	2100	2200	2300	
60	**36**	**25**	**14**	**19**	**57**	**227**	**422**	**520**	**481**	**601**	**746**	**978**	**983**	**797**	**776**	**822**	**968**	**771**	**610**	**581**	**466**	**241**	**129**	
22	12	12	4	0	13	42	70	128	163	153	161	**220**	253	224	180	187	236	192	175	143	133	89	48	-
15	12	4	3	4	7	56	104	137	128	148	173	**239**	244	191	179	199	244	208	142	166	142	67	30	-
14	3	6	3	7	10	57	124	127	113	158	180	**249**	254	179	210	222	245	183	161	150	113	44	31	-
9	10	3	4	8	27	72	125	128	137	143	**233**	271	233	204	208	215	244	189	133	122	79	41	21	-

AM Peak 1145 - 1245 (940), AM PHF=0.94

MetroCount Traffic Executive
Event Counts

1125 -- English (ENU)

Datasets:
Site: **[1164.12] MISSION CENTER RD (FRIARS RD-HAZARD CENTER DR) SOUTHBOUND**
Input A: 1 - North bound. - Lane= 0, Excluded from totals.
Input B: 3 - South bound. - Lane= 0, Added to totals. (/2.000)
Survey Duration: 11:50 Monday, June 13, 2011 => 8:43 Wednesday, June 15, 2011
File: 1164.12.15Jun2011.EC0 (Regular)
Data type: Axle sensors - Separate (Count)

Profile:
Filter time: **0:00 Tuesday, June 14, 2011 => 0:00 Wednesday, June 15, 2011**

*** Tuesday, June 14, 2011=9502, 15 minute drops**

0000	0100	0200	0300	0400	0500	0600	0700	0800	0900	1000	1100	1200	1300	1400	1500	1600	1700	1800	1900	2000	2100	2200	2300	
45	**30**	**14**	**7**	**17**	**34**	**147**	**279**	**404**	**396**	**530**	**730**	**810**	**706**	**678**	**698**	**865**	**900**	**650**	**523**	**478**	**300**	**184**	**84**	
13	10	6	3	1	6	24	52	86	82	116	165	**209**	170	164	185	211	213	199	158	129	93	77	34	-
13	8	3	3	2	6	39	58	115	99	132	171	**185**	182	154	181	201	243	184	132	119	87	40	15	-
14	6	3	0	7	6	30	88	89	92	138	198	**213**	175	189	181	249	222	141	117	123	59	36	21	-
5	6	2	1	7	16	54	82	115	124	145	**197**	203	180	172	151	205	222	127	116	108	61	31	14	-

AM Peak 1145 - 1245 (803), AM PHF=0.94

MetroCount Traffic Executive
Event Counts

1129 -- English (ENU)

Datasets:

Site:	**[1164.16] PHYLLIS PL (WEST OF I-805 SB RAMPS) EASTBOUND**
Input A:	4 - West bound. - Lane= 0, Excluded from totals.
Input B:	2 - East bound. - Lane= 0, Added to totals. (/2.000)
Survey Duration:	15:27 Wednesday, June 08, 2011 => 10:59 Friday, June 10, 2011
File:	1164.16.10Jun2011.EC0 (Base)
Data type:	Axle sensors - Separate (Count)

Profile:

Filter time: **0:00 Thursday, June 09, 2011 => 0:00 Friday, June 10, 2011**

*** Thursday, June 09, 2011=1228, 15 minute drops**

0000	0100	0200	0300	0400	0500	0600	0700	0800	0900	1000	1100	1200	1300	1400	1500	1600	1700	1800	1900	2000	2100	2200	2300	
11	**4**	**5**	**5**	**13**	**18**	**37**	**89**	**95**	**72**	**74**	**84**	**91**	**75**	**86**	**65**	**86**	**101**	**51**	**55**	**50**	**24**	**29**	**10**	
7	2	1	3	2	3	11	19	**27**	17	14	22	16	17	13	14	13	31	15	14	11	10	8	4	-
2	1	0	0	6	1	6	28	**26**	23	24	15	31	23	21	21	24	22	11	15	14	8	7	3	-
2	1	0	0	3	9	10	19	**26**	12	16	25	22	11	26	20	22	25	16	13	18	4	6	0	-
0	0	4	2	2	5	10	**24**	17	21	20	22	22	24	21	10	27	23	9	13	8	2	8	3	-

AM Peak 0745 - 0845 (102), AM PHF=0.96

MetroCount Traffic Executive
Event Counts

1128 -- English (ENU)

Datasets:

Site:	**[1164.16] PHYLLIS PL (WEST OF I-805 SB RAMPS) WESTBOUND**
Input A:	4 - West bound. - Lane= 0, Added to totals. (/2.000)
Input B:	2 - East bound. - Lane= 0, Excluded from totals.
Survey Duration:	15:27 Wednesday, June 08, 2011 => 10:59 Friday, June 10, 2011
File:	1164.16.10Jun2011.EC0 (Base)
Data type:	Axle sensors - Separate (Count)

Profile:

Filter time: **0:00 Thursday, June 09, 2011 => 0:00 Friday, June 10, 2011**

*** Thursday, June 09, 2011=1192, 15 minute drops**

0000	0100	0200	0300	0400	0500	0600	0700	0800	0900	1000	1100	1200	1300	1400	1500	1600	1700	1800	1900	2000	2100	2200	2300	
8	**3**	**4**	**4**	**7**	**9**	**10**	**35**	**43**	**50**	**53**	**76**	**92**	**78**	**82**	**97**	**102**	**119**	**82**	**76**	**75**	**43**	**35**	**12**	
3	2	0	2	2	4	2	5	11	15	16	20	**28**	21	12	31	25	36	17	25	19	15	12	3	-
0	1	1	0	1	0	2	9	13	17	15	18	**23**	18	23	27	25	33	22	22	20	9	7	5	-
2	0	0	2	4	2	1	11	15	3	9	15	**19**	24	24	17	34	25	21	13	17	10	6	1	-
3	0	3	0	0	3	5	10	4	16	13	**23**	22	15	23	23	18	25	22	16	19	9	10	3	-

AM Peak 1145 - 1245 (92), AM PHF=0.84

MetroCount Traffic Executive
Event Counts

1130 -- English (ENU)

Datasets:

Site:	**[1164.17] MURRAY RIDGE RD (I-805 NB RAMPS-MISSION CENTER RD) NORTHBOUND**
Input A:	1 - North bound. - Lane= 0, Added to totals. (/2.000)
Input B:	3 - South bound. - Lane= 0, Excluded from totals.
Survey Duration:	15:38 Wednesday, June 08, 2011 => 10:57 Friday, June 10, 2011
File:	1164.17.10Jun2011.EC0 (Base)
Data type:	Axle sensors - Separate (Count)

Profile:

Filter time: **0:00 Thursday, June 09, 2011 => 0:00 Friday, June 10, 2011**

*** Thursday, June 09, 2011=8700, 15 minute drops**

0000	0100	0200	0300	0400	0500	0600	0700	0800	0900	1000	1100	1200	1300	1400	1500	1600	1700	1800	1900	2000	2100	2200	2300	
71	**46**	**31**	**16**	**42**	**108**	**356**	**673**	**697**	**389**	**370**	**362**	**524**	**478**	**492**	**691**	**944**	**883**	**541**	**376**	**319**	**144**	**92**	**60**	
17	9	9	1	2	12	61	145	**166**	112	109	93	141	127	102	157	194	216	140	112	89	42	23	22	-
16	9	7	4	7	29	79	165	**160**	93	78	89	130	136	122	208	263	267	158	90	86	34	23	15	-
22	14	8	7	14	29	101	170	**188**	77	97	83	134	109	131	168	208	217	114	81	76	39	31	14	-
16	14	7	4	19	38	116	**194**	183	109	86	98	119	106	137	159	279	184	130	93	69	30	15	9	-

AM Peak 0745 - 0845 (708), AM PHF=0.91

MetroCount Traffic Executive
Event Counts

1131 -- English (ENU)

Datasets:

Site:	**[1164.17] MURRAY RIDGE RD (I-805 NB RAMPS-MISSION CENTER RD) SOUTHBOUND**
Input A:	1 - North bound. - Lane= 0, Excluded from totals.
Input B:	3 - South bound. - Lane= 0, Added to totals. (/2.000)
Survey Duration:	15:38 Wednesday, June 08, 2011 => 10:57 Friday, June 10, 2011
File:	1164.17.10Jun2011.EC0 (Base)
Data type:	Axle sensors - Separate (Count)

Profile:

Filter time: **0:00 Thursday, June 09, 2011 => 0:00 Friday, June 10, 2011**

*** Thursday, June 09, 2011=8741, 15 minute drops**

0000	0100	0200	0300	0400	0500	0600	0700	0800	0900	1000	1100	1200	1300	1400	1500	1600	1700	1800	1900	2000	2100	2200	2300	
36	**31**	**16**	**19**	**89**	**231**	**556**	**667**	**530**	**427**	**389**	**406**	**471**	**440**	**516**	**673**	**870**	**837**	**464**	**250**	**304**	**254**	**185**	**86**	
11	8	3	7	14	29	118	**167**	122	114	97	101	124	124	132	158	223	269	119	80	86	73	46	26	-
10	12	5	1	20	45	111	**183**	154	125	84	89	113	90	123	158	204	200	120	78	66	57	43	26	-
10	6	2	4	27	67	164	**192**	144	102	113	102	130	119	126	179	224	192	123	48	69	67	53	18	-
5	5	6	7	28	91	**163**	126	111	86	96	114	104	108	135	178	219	176	102	44	83	57	43	16	-

AM Peak 0645 - 0745 (704), AM PHF=0.92

MetroCount Traffic Executive
Event Counts

1132 -- English (ENU)

Datasets:

Site:	**[1164.18] MURRAY RIDGE RD (MISSION CENTER RD-SANDROCK RD) NORTHBOUND**
Input A:	1 - North bound. - Lane= 0, Added to totals. (/2.000)
Input B:	0 - Unused or unknown. - Lane= 0, Excluded from totals.
Survey Duration:	15:52 Wednesday, June 08, 2011 => 10:43 Friday, June 10, 2011
File:	1164.18.N10Jun2011.EC0 (Base)
Data type:	Axle sensors - Separate (Count)

Profile:

Filter time:	**0:00 Thursday, June 09, 2011 => 0:00 Friday, June 10, 2011**

*** Thursday, June 09, 2011=7021, 15 minute drops**

0000	0100	0200	0300	0400	0500	0600	0700	0800	0900	1000	1100	1200	1300	1400	1500	1600	1700	1800	1900	2000	2100	2200	2300	
72	**50**	**29**	**16**	**31**	**70**	**192**	**391**	**386**	**273**	**300**	**331**	**411**	**426**	**469**	**603**	**680**	**686**	**509**	**410**	**329**	**178**	**111**	**73**	
16	17	7	2	3	6	34	88	88	70	82	78	**122**	106	111	140	155	178	136	119	103	53	23	26	-
14	7	7	1	10	20	36	88	94	64	64	79	**104**	125	110	165	176	176	143	93	87	45	33	17	-
23	13	6	9	7	18	47	95	108	63	80	80	**105**	98	117	149	161	178	101	89	84	36	31	14	-
19	14	9	4	11	26	75	121	97	77	75	**94**	81	98	132	149	189	155	130	109	55	45	25	16	-

AM Peak 1145 - 1245 (425), AM PHF=0.87

MetroCount Traffic Executive
Event Counts

1133 -- English (ENU)

Datasets:

Site:	**[1164.18] MURRAY RIDGE RD (MISSION CENTER RD-SANDROCK RD) SOUTHBOUND**
Input A:	3 - South bound. - Lane= 0, Added to totals. (/2.000)
Input B:	0 - Unused or unknown. - Lane= 0, Excluded from totals.
Survey Duration:	15:54 Wednesday, June 08, 2011 => 10:44 Friday, June 10, 2011
File:	1164.18.S10Jun2011.EC0 (Base)
Data type:	Axle sensors - Separate (Count)

Profile:

Filter time:	**0:00 Thursday, June 09, 2011 => 0:00 Friday, June 10, 2011**

*** Thursday, June 09, 2011=7053, 15 minute drops**

0000	0100	0200	0300	0400	0500	0600	0700	0800	0900	1000	1100	1200	1300	1400	1500	1600	1700	1800	1900	2000	2100	2200	2300	
32	**31**	**19**	**21**	**77**	**211**	**483**	**573**	**479**	**401**	**346**	**356**	**352**	**383**	**406**	**452**	**588**	**589**	**384**	**238**	**218**	**180**	**162**	**78**	
7	8	5	6	15	27	96	**146**	125	98	88	88	83	111	110	101	153	177	98	74	57	47	54	26	-
12	11	5	2	15	42	101	**151**	127	118	78	76	88	83	109	102	132	139	97	66	53	49	36	24	-
8	7	5	3	23	60	148	**158**	122	106	102	97	102	92	93	109	157	143	106	52	54	52	42	15	-
5	5	5	10	24	82	**138**	119	106	80	78	96	81	98	95	141	147	131	84	47	55	32	30	13	-

AM Peak 0645 - 0745 (592), AM PHF=0.94

True Count
Event Counts

EventCount-27 -- English (ENU)

Datasets:

Site:	**[04610W] Loc 28 Phyllis Pl Btwn I-805 SB Ramps & I-805 NB Ramps**
Attribute:	KOA
Input A:	4 - West bound. - Lane= 0, Added to totals. (/2.000)
Input B:	0 - Unused or unknown. - Lane= 0, Excluded from totals.
Survey Duration:	18:57 Tuesday, November 13, 2012 => 11:16 Saturday, November 17, 2012
Zone:	
File:	D:\Traffic Data\McData\KOA\2012\046\UM04610Wb17.EC0 (Base)
Identifier:	W558TFAZ MC56-L5 [MC55] (c)Microcom 19Oct04
Algorithm:	Event Count
Data type:	Axle sensors - Separate (Count)

Profile:

Filter time:	**19:00 Tuesday, November 13, 2012 => 6:00 Friday, November 16, 2012**
Name:	Default Profile
Scheme:	Count events divided by setup divisor
Units:	Non metric (ft, mi, ft/s, mph, lb, ton)
In profile:	Events = 18032 / 18037 (99.97%)

*** Tuesday, November 13, 2012=210 (Incomplete) , 15 minute drops**

0000	0100	0200	0300	0400	0500	0600	0700	0800	0900	1000	1100	1200	1300	1400	1500	1600	1700	1800	1900	2000	2100	2200	2300	
-	**-**	**-**	**-**	**-**	**-**	**-**	**-**	**-**	**-**	**-**	**-**	**-**	**-**	**-**	**-**	**-**	**-**	**-**	**0**	**0**	**1**	**128**	**82**	
-	-	-	-	-	-	-	-	-	-	-	-	-	-	-	-	-	-	-	0	0	0	33	14	10
-	-	-	-	-	-	-	-	-	-	-	-	-	-	-	-	-	-	-	0	0	0	46	24	10
-	-	-	-	-	-	-	-	-	-	-	-	-	-	-	-	-	-	-	0	0	0	26	24	14
-	-	-	-	-	-	-	-	-	-	-	-	-	-	-	-	-	-	-	0	0	1	23	21	10

*** Wednesday, November 14, 2012=8791, 15 minute drops**

0000	0100	0200	0300	0400	0500	0600	0700	0800	0900	1000	1100	1200	1300	1400	1500	1600	1700	1800	1900	2000	2100	2200	2300	
43	**34**	**10**	**24**	**75**	**243**	**441**	**640**	**521**	**449**	**355**	**469**	**444**	**442**	**542**	**682**	**794**	**1012**	**563**	**340**	**248**	**216**	**137**	**73**	
10	10	6	4	14	49	83	127	**136**	114	90	91	115	111	118	168	211	**303**	174	102	66	53	47	16	8
10	12	1	8	11	40	104	128	**132**	130	90	117	104	106	110	160	171	**265**	175	90	72	64	27	22	12
14	9	3	7	22	76	144	**212**	117	104	85	120	115	114	178	175	238	**214**	114	69	57	59	38	19	7
10	5	0	6	29	78	111	**174**	136	102	91	142	111	112	137	179	174	**231**	100	80	53	41	26	17	10

AM Peak 0730 - 0830 (653), AM PHF=0.77 PM Peak 1700 - 1800 (1012), PM PHF=0.83

*** Thursday, November 15, 2012=8990, 15 minute drops**

0000	0100	0200	0300	0400	0500	0600	0700	0800	0900	1000	1100	1200	1300	1400	1500	1600	1700	1800	1900	2000	2100	2200	2300	
37	**32**	**14**	**41**	**77**	**254**	**457**	**626**	**492**	**400**	**350**	**486**	**494**	**497**	**600**	**744**	**1000**	**858**	**521**	**333**	**228**	**228**	**144**	**84**	
8	7	7	10	14	44	91	123	**154**	90	83	103	135	125	132	174	271	**296**	161	103	56	72	49	29	10
12	8	2	8	9	52	108	**138**	110	110	92	91	113	118	141	149	**240**	228	124	95	61	63	40	23	8
7	9	4	11	27	84	125	**219**	103	103	105	134	128	128	179	208	**259**	166	149	79	53	53	37	23	1
10	9	1	13	28	74	134	**146**	125	97	71	160	118	127	148	214	**231**	169	87	59	59	41	19	9	1

AM Peak 0715 - 0815 (657), AM PHF=0.75 PM Peak 1615 - 1715 (1025), PM PHF=0.87

*** Friday, November 16, 2012=19 (Incomplete) , 15 minute drops**

0000	0100	0200	0300	0400	0500	0600	0700	0800	0900	1000	1100	1200	1300	1400	1500	1600	1700	1800	1900	2000	2100	2200	2300	
19	**0**	**0**	**0**	**0**	**0**	**-**	**-**	**-**	**-**	**-**	**-**	**-**	**-**	**-**	**-**	**-**	**-**	**-**	**-**	**-**	**-**	**-**	**-**	
10	0	0	0	0	0	-	-	-	-	-	-	-	-	-	-	-	-	-	-	-	-	-	-	-
8	0	0	0	0	0	-	-	-	-	-	-	-	-	-	-	-	-	-	-	-	-	-	-	-
1	0	0	0	0	0	-	-	-	-	-	-	-	-	-	-	-	-	-	-	-	-	-	-	-
1	0	0	0	0	0	-	-	-	-	-	-	-	-	-	-	-	-	-	-	-	-	-	-	-

True Count
Event Counts

EventCount-27 -- English (ENU)

Datasets:

Site:	**[04610E] Loc 28 Phyllis Pl Btwn I-805 SB Ramps & I-805 NB Ramps**
Attribute:	KOA
Input A:	2 - East bound. - Lane= 0, Added to totals. (/2.000)
Input B:	0 - Unused or unknown. - Lane= 0, Excluded from totals.
Survey Duration:	18:52 Tuesday, November 13, 2012 => 9:00 Saturday, November 17, 2012
Zone:	
File:	D:\Traffic Data\McData\KOA\2012\046\UM04610Eb17.EC0 (Base)
Identifier:	W139N0DA MC56-L5 [MC55] (c)Microcom 19Oct04
Algorithm:	Event Count
Data type:	Axle sensors - Separate (Count)

Profile:

Filter time:	**19:00 Tuesday, November 13, 2012 => 6:00 Friday, November 16, 2012**
Name:	Default Profile
Scheme:	Count events divided by setup divisor
Units:	Non metric (ft, mi, ft/s, mph, lb, ton)
In profile:	Events = 9729 / 9738 (99.91%)

*** Tuesday, November 13, 2012=121 (Incomplete) , 15 minute drops**

0000	0100	0200	0300	0400	0500	0600	0700	0800	0900	1000	1100	1200	1300	1400	1500	1600	1700	1800	1900	2000	2100	2200	2300	
-	**-**	**-**	**-**	**-**	**-**	**-**	**-**	**-**	**-**	**-**	**-**	**-**	**-**	**-**	**-**	**-**	**-**	**-**	**0**	**0**	**2**	**54**	**66**	
-	-	-	-	-	-	-	-	-	-	-	-	-	-	-	-	-	-	-	0	0	0	8	18	11
-	-	-	-	-	-	-	-	-	-	-	-	-	-	-	-	-	-	-	0	0	0	23	18	6
-	-	-	-	-	-	-	-	-	-	-	-	-	-	-	-	-	-	-	0	0	0	13	17	2
-	-	-	-	-	-	-	-	-	-	-	-	-	-	-	-	-	-	-	0	0	2	10	13	3

*** Wednesday, November 14, 2012=4849, 15 minute drops**

0000	0100	0200	0300	0400	0500	0600	0700	0800	0900	1000	1100	1200	1300	1400	1500	1600	1700	1800	1900	2000	2100	2200	2300	
22	**24**	**8**	**11**	**20**	**51**	**185**	**367**	**359**	**304**	**212**	**313**	**291**	**361**	**292**	**336**	**342**	**323**	**334**	**237**	**239**	**86**	**67**	**71**	
11	5	1	2	5	3	27	74	**79**	78	65	68	59	**91**	60	94	98	80	80	58	59	31	16	19	10
6	8	2	5	3	9	49	92	**97**	87	61	73	74	**82**	72	85	90	81	116	64	62	24	18	21	3
2	6	2	3	4	15	49	90	**92**	69	51	83	80	**102**	69	70	82	92	64	53	63	19	19	17	3
3	5	3	1	8	24	61	**112**	91	70	36	90	78	**87**	92	88	73	71	75	63	56	12	14	14	9

AM Peak 0745 - 0845 (380), AM PHF=0.85 PM Peak 1300 - 1400 (361), PM PHF=0.89

*** Thursday, November 15, 2012=4712, 15 minute drops**

0000	0100	0200	0300	0400	0500	0600	0700	0800	0900	1000	1100	1200	1300	1400	1500	1600	1700	1800	1900	2000	2100	2200	2300	
25	**24**	**13**	**23**	**17**	**49**	**175**	**326**	**325**	**226**	**236**	**307**	**375**	**323**	**347**	**322**	**331**	**285**	**289**	**227**	**187**	**123**	**105**	**58**	
10	5	6	4	3	3	30	57	68	64	60	75	**80**	**86**	92	81	89	79	77	71	50	34	35	12	4
3	5	2	1	2	10	36	92	89	61	65	57	**104**	80	77	87	73	59	68	66	54	31	27	19	14
3	5	0	5	6	21	56	94	89	56	46	69	**96**	72	82	33	65	65	69	46	49	25	23	12	0
9	10	6	14	6	15	54	84	80	46	65	**107**	**96**	86	96	121	104	83	76	45	35	33	21	16	0

AM Peak 1145 - 1245 (385), AM PHF=0.90 PM Peak 1215 - 1315 (381), PM PHF=0.92

*** Friday, November 16, 2012=18 (Incomplete) , 15 minute drops**

0000	0100	0200	0300	0400	0500	0600	0700	0800	0900	1000	1100	1200	1300	1400	1500	1600	1700	1800	1900	2000	2100	2200	2300	
18	**0**	**0**	**0**	**0**	**0**	**-**	**-**	**-**	**-**	**-**	**-**	**-**	**-**	**-**	**-**	**-**	**-**	**-**	**-**	**-**	**-**	**-**	**-**	
4	0	0	0	0	0	-	-	-	-	-	-	-	-	-	-	-	-	-	-	-	-	-	-	-
14	0	0	0	0	0	-	-	-	-	-	-	-	-	-	-	-	-	-	-	-	-	-	-	-
0	0	0	0	0	0	-	-	-	-	-	-	-	-	-	-	-	-	-	-	-	-	-	-	-
0	0	0	0	0	0	-	-	-	-	-	-	-	-	-	-	-	-	-	-	-	-	-	-	-

True Count
Event Counts

EventCount-27 -- English (ENU)

Datasets:

Site:	**[04605] Loc 21 Qualcomm Wy Btwn Friars Rd EB Ramps & Rio San Diego Dr**
Attribute:	KOA
Input A:	1 - North bound. - Lane= 0, Excluded from totals.
Input B:	3 - South bound. - Lane= 0, Added to totals. (/2.000)
Survey Duration:	18:52 Tuesday, November 13, 2012 => 9:09 Saturday, November 17, 2012
Zone:	
File:	D:\Traffic Data\McData\KOA\2012\046\UM04605b17.EC0 (Plus)
Identifier:	M264XG37 MC56-6 [MC55] (c)Microcom 02/03/01
Algorithm:	Event Count
Data type:	Axle sensors - Separate (Count)

Profile:

Filter time:	**19:00 Tuesday, November 13, 2012 => 6:00 Friday, November 16, 2012**
Name:	Default Profile
Scheme:	Count events divided by setup divisor
Units:	Non metric (ft, mi, ft/s, mph, lb, ton)
In profile:	Events = 27837 / 27841 (99.99%)

*** Tuesday, November 13, 2012=16 (Incomplete) , 15 minute drops**

0000	0100	0200	0300	0400	0500	0600	0700	0800	0900	1000	1100	1200	1300	1400	1500	1600	1700	1800	1900	2000	2100	2200	2300	
-	-	-	-	-	-	-	-	-	-	-	-	-	-	-	-	-	-	-	**0**	**0**	**0**	**0**	**16**	
-	-	-	-	-	-	-	-	-	-	-	-	-	-	-	-	-	-	-	0	0	0	0	3	3
-	-	-	-	-	-	-	-	-	-	-	-	-	-	-	-	-	-	-	0	0	0	0	8	3
-	-	-	-	-	-	-	-	-	-	-	-	-	-	-	-	-	-	-	0	0	0	0	3	4
-	-	-	-	-	-	-	-	-	-	-	-	-	-	-	-	-	-	-	0	0	0	0	2	2

*** Wednesday, November 14, 2012=5410, 15 minute drops**

0000	0100	0200	0300	0400	0500	0600	0700	0800	0900	1000	1100	1200	1300	1400	1500	1600	1700	1800	1900	2000	2100	2200	2300	
12	**4**	**3**	**5**	**11**	**36**	**132**	**281**	**302**	**315**	**322**	**411**	**426**	**370**	**375**	**444**	**454**	**546**	**379**	**231**	**140**	**122**	**59**	**34**	
3	3	2	1	0	5	19	53	76	64	93	109	**104**	98	98	99	109	**140**	90	49	42	37	21	11	3
3	1	0	1	3	4	27	75	70	80	70	96	**114**	101	95	113	110	**152**	110	68	32	22	16	9	2
4	0	0	2	3	13	44	70	72	78	80	94	**107**	93	96	112	109	**111**	111	49	32	35	13	7	3
2	0	1	1	5	14	43	84	84	94	80	**113**	102	78	86	121	126	**143**	69	65	34	28	9	7	1

AM Peak 1145 - 1245 (437), AM PHF=0.96 PM Peak 1700 - 1800 (546), PM PHF=0.90

*** Thursday, November 15, 2012=5699, 15 minute drops**

0000	0100	0200	0300	0400	0500	0600	0700	0800	0900	1000	1100	1200	1300	1400	1500	1600	1700	1800	1900	2000	2100	2200	2300	
9	**9**	**10**	**6**	**11**	**43**	**163**	**270**	**301**	**279**	**296**	**414**	**474**	**446**	**444**	**419**	**515**	**559**	**401**	**240**	**178**	**120**	**59**	**35**	
3	4	3	1	2	7	23	50	70	64	67	76	**98**	132	109	107	127	**148**	111	55	50	42	21	17	10
2	2	3	1	2	11	34	88	81	73	86	109	**126**	100	111	124	133	**166**	106	82	50	28	19	9	4
3	1	3	0	2	13	46	71	61	71	67	**125**	117	98	121	104	**129**	108	93	52	43	27	9	6	4
1	2	1	4	5	13	61	62	90	72	77	**105**	134	118	104	85	**127**	137	71	51	35	24	10	7	0

AM Peak 1130 - 1230 (453), AM PHF=0.90 PM Peak 1630 - 1730 (569), PM PHF=0.86

*** Friday, November 16, 2012=18 (Incomplete) , 15 minute drops**

0000	0100	0200	0300	0400	0500	0600	0700	0800	0900	1000	1100	1200	1300	1400	1500	1600	1700	1800	1900	2000	2100	2200	2300	
18	**0**	**0**	**0**	**0**	**0**	-	-	-	-	-	-	-	-	-	-	-	-	-	-	-	-	-	-	
10	0	0	0	0	0	-	-	-	-	-	-	-	-	-	-	-	-	-	-	-	-	-	-	-
4	0	0	0	0	0	-	-	-	-	-	-	-	-	-	-	-	-	-	-	-	-	-	-	-
4	0	0	0	0	0	-	-	-	-	-	-	-	-	-	-	-	-	-	-	-	-	-	-	-
0	0	0	0	0	0	-	-	-	-	-	-	-	-	-	-	-	-	-	-	-	-	-	-	-

EventCount-27 Page 1

True Count
Event Counts

EventCount-27 -- English (ENU)

Datasets:

Site:	**[04605] Loc 21 Qualcomm Wy Btwn Friars Rd EB Ramps & Rio San Diego Dr**
Attribute:	KOA
Input A:	1 - North bound. - Lane= 0, Added to totals. (/2.000)
Input B:	3 - South bound. - Lane= 0, Excluded from totals.
Survey Duration:	18:52 Tuesday, November 13, 2012 => 9:09 Saturday, November 17, 2012
Zone:	
File:	D:\Traffic Data\McData\KOA\2012\046\UM04605b17.EC0 (Plus)
Identifier:	M264XG37 MC56-6 [MC55] (c)Microcom 02/03/01
Algorithm:	Event Count
Data type:	Axle sensors - Separate (Count)

Profile:

Filter time:	**19:00 Tuesday, November 13, 2012 => 6:00 Friday, November 16, 2012**
Name:	Default Profile
Scheme:	Count events divided by setup divisor
Units:	Non metric (ft, mi, ft/s, mph, lb, ton)
In profile:	Events = 27837 / 27841 (99.99%)

*** Tuesday, November 13, 2012=41 (Incomplete) , 15 minute drops**

0000	0100	0200	0300	0400	0500	0600	0700	0800	0900	1000	1100	1200	1300	1400	1500	1600	1700	1800	1900	2000	2100	2200	2300	
-	-	-	-	-	-	-	-	-	-	-	-	-	-	-	-	-	-	-	**0**	**0**	**0**	**0**	**41**	
-	-	-	-	-	-	-	-	-	-	-	-	-	-	-	-	-	-	-	0	0	0	0	5	3
-	-	-	-	-	-	-	-	-	-	-	-	-	-	-	-	-	-	-	0	0	0	0	10	6
-	-	-	-	-	-	-	-	-	-	-	-	-	-	-	-	-	-	-	0	0	0	0	16	6
-	-	-	-	-	-	-	-	-	-	-	-	-	-	-	-	-	-	-	0	0	0	0	11	7

*** Wednesday, November 14, 2012=8264, 15 minute drops**

0000	0100	0200	0300	0400	0500	0600	0700	0800	0900	1000	1100	1200	1300	1400	1500	1600	1700	1800	1900	2000	2100	2200	2300	
22	**12**	**8**	**11**	**19**	**64**	**208**	**446**	**513**	**415**	**440**	**577**	**683**	**679**	**552**	**616**	**796**	**692**	**496**	**406**	**255**	**185**	**126**	**48**	
3	3	2	3	2	6	34	89	136	100	122	131	**157**	170	144	145	**208**	204	147	114	66	48	36	17	8
6	3	4	3	5	12	40	105	110	96	93	125	**188**	171	145	133	**172**	172	142	99	71	61	50	14	6
6	3	1	4	4	16	55	110	129	91	89	149	**165**	163	152	170	**222**	163	116	99	58	40	23	13	6
7	3	1	1	8	30	80	142	139	129	136	**172**	173	175	113	169	**195**	154	91	95	61	37	17	5	4

AM Peak 1145 - 1245 (682), AM PHF=0.91 PM Peak 1600 - 1700 (796), PM PHF=0.90

*** Thursday, November 15, 2012=8351, 15 minute drops**

0000	0100	0200	0300	0400	0500	0600	0700	0800	0900	1000	1100	1200	1300	1400	1500	1600	1700	1800	1900	2000	2100	2200	2300	
24	**15**	**16**	**4**	**25**	**68**	**211**	**459**	**480**	**362**	**469**	**575**	**711**	**721**	**614**	**664**	**712**	**681**	**528**	**350**	**262**	**233**	**113**	**59**	
5	2	5	2	5	6	26	92	111	89	110	131	**167**	181	174	171	172	**179**	152	93	78	64	36	15	16
6	7	5	1	4	19	49	119	124	99	103	136	**174**	174	147	140	170	**182**	147	98	69	62	33	18	18
6	2	4	0	4	16	59	125	126	95	109	150	**183**	187	155	207	**188**	163	128	88	62	67	26	14	5
4	4	2	1	9	28	78	124	120	80	148	**158**	187	180	140	146	**183**	157	101	72	54	41	18	12	1

AM Peak 1145 - 1245 (682), AM PHF=0.93 PM Peak 1630 - 1730 (731), PM PHF=0.97

*** Friday, November 16, 2012=39 (Incomplete) , 15 minute drops**

0000	0100	0200	0300	0400	0500	0600	0700	0800	0900	1000	1100	1200	1300	1400	1500	1600	1700	1800	1900	2000	2100	2200	2300	
39	**0**	**0**	**0**	**0**	**0**	-	-	-	-	-	-	-	-	-	-	-	-	-	-	-	-	-	-	
16	0	0	0	0	0	-	-	-	-	-	-	-	-	-	-	-	-	-	-	-	-	-	-	-
18	0	0	0	0	0	-	-	-	-	-	-	-	-	-	-	-	-	-	-	-	-	-	-	-
5	0	0	0	0	0	-	-	-	-	-	-	-	-	-	-	-	-	-	-	-	-	-	-	-
1	0	0	0	0	0	-	-	-	-	-	-	-	-	-	-	-	-	-	-	-	-	-	-	-

EventCount-27 Page 1

True Count
Event Counts

EventCount-27 -- English (ENU)

Datasets:

Site:	**[04604S] !Qualcomm Wy Btwn Friars Rd WB Ramps & Friars Rd EB Ramps**
Attribute:	KOA
Input A:	3 - South bound. - Lane= 0, Added to totals. (/2.000)
Input B:	0 - Unused or unknown. - Lane= 0, Excluded from totals.
Survey Duration:	18:50 Tuesday, November 13, 2012 => 9:14 Saturday, November 17, 2012
Zone:	
File:	D:\Traffic Data\McData\KOA\2012\046\UM04604Sb17.EC0 (Plus)
Identifier:	A7987E8Y MC56-1 [MC55] (c)Microcom 07/06/99
Algorithm:	Event Count
Data type:	Axle sensors - Separate (Count)

Profile:

Filter time:	**19:00 Tuesday, November 13, 2012 => 6:00 Friday, November 16, 2012**
Name:	Default Profile
Scheme:	Count events divided by setup divisor
Units:	Non metric (ft, mi, ft/s, mph, lb, ton)
In profile:	Events = 8068 / 8072 (99.95%)

*** Tuesday, November 13, 2012=24 (Incomplete) , 15 minute drops**

0000	0100	0200	0300	0400	0500	0600	0700	0800	0900	1000	1100	1200	1300	1400	1500	1600	1700	1800	1900	2000	2100	2200	2300	
-	-	-	-	-	-	-	-	-	-	-	-	-	-	-	-	-	-	-	**0**	**0**	**0**	**3**	**21**	
-	-	-	-	-	-	-	-	-	-	-	-	-	-	-	-	-	-	-	0	0	0	0	12	4
-	-	-	-	-	-	-	-	-	-	-	-	-	-	-	-	-	-	-	0	0	0	0	4	4
-	-	-	-	-	-	-	-	-	-	-	-	-	-	-	-	-	-	-	0	0	0	0	3	3
-	-	-	-	-	-	-	-	-	-	-	-	-	-	-	-	-	-	-	0	0	0	3	2	1

*** Wednesday, November 14, 2012=3915, 15 minute drops**

0000	0100	0200	0300	0400	0500	0600	0700	0800	0900	1000	1100	1200	1300	1400	1500	1600	1700	1800	1900	2000	2100	2200	2300	
11	**5**	**5**	**10**	**10**	**31**	**105**	**202**	**219**	**231**	**241**	**314**	**305**	**260**	**273**	**342**	**314**	**350**	**284**	**174**	**95**	**78**	**44**	**20**	
4	4	2	1	0	5	16	42	52	45	78	81	**76**	60	75	80	77	**92**	81	42	28	23	19	7	1
4	0	0	1	4	2	16	53	50	68	43	80	**85**	69	63	82	70	**104**	71	56	23	13	10	7	2
3	1	2	2	1	12	46	61	49	59	63	73	**77**	68	64	95	**78**	62	76	33	21	21	9	3	4
1	0	1	6	5	12	28	47	69	60	58	**80**	67	64	71	85	**90**	93	57	43	24	21	7	3	1

AM Peak 1145 - 1245 (318), AM PHF=0.93 PM Peak 1630 - 1730 (364), PM PHF=0.87

*** Thursday, November 15, 2012=4113, 15 minute drops**

0000	0100	0200	0300	0400	0500	0600	0700	0800	0900	1000	1100	1200	1300	1400	1500	1600	1700	1800	1900	2000	2100	2200	2300	
8	**7**	**9**	**10**	**11**	**34**	**122**	**193**	**206**	**228**	**241**	**308**	**341**	**318**	**318**	**297**	**354**	**396**	**275**	**169**	**124**	**81**	**43**	**26**	
1	2	1	6	2	6	24	40	43	49	52	63	**79**	86	74	74	102	**105**	95	39	37	31	17	8	3
2	3	6	0	2	9	25	64	60	45	69	89	**92**	75	83	75	74	**120**	73	59	36	15	15	10	5
4	1	1	0	2	11	32	40	48	62	66	**83**	83	71	85	81	**88**	64	54	37	29	20	8	5	2
1	1	1	4	5	8	42	49	56	73	54	**76**	88	87	77	67	**91**	107	49	35	23	15	3	4	0

AM Peak 1130 - 1230 (329), AM PHF=0.89 PM Peak 1630 - 1730 (404), PM PHF=0.84

*** Friday, November 16, 2012=10 (Incomplete) , 15 minute drops**

0000	0100	0200	0300	0400	0500	0600	0700	0800	0900	1000	1100	1200	1300	1400	1500	1600	1700	1800	1900	2000	2100	2200	2300	
10	**0**	**0**	**0**	**0**	-	-	-	-	-	-	-	-	-	-	-	-	-	-	-	-	-	-	-	
3	0	0	0	0	0	-	-	-	-	-	-	-	-	-	-	-	-	-	-	-	-	-	-	-
5	0	0	0	0	0	-	-	-	-	-	-	-	-	-	-	-	-	-	-	-	-	-	-	-
2	0	0	0	0	0	-	-	-	-	-	-	-	-	-	-	-	-	-	-	-	-	-	-	-
0	0	0	0	0	0	-	-	-	-	-	-	-	-	-	-	-	-	-	-	-	-	-	-	-

EventCount-27 Page 1

True Count
Event Counts

EventCount-27 -- English (ENU)

Datasets:

Site:	**[04604N] Loc 20 Qualcomm Wy Btwn Friars Rd WB Ramps & Friars Rd EB Ramps**
Attribute:	KOA
Input A:	1 - North bound. - Lane= 0, Added to totals. (/2.000)
Input B:	0 - Unused or unknown. - Lane= 0, Excluded from totals.
Survey Duration:	18:53 Tuesday, November 13, 2012 => 9:14 Saturday, November 17, 2012
Zone:	
File:	D:\Traffic Data\McData\KOA\2012\046\UM04604Nb17.EC0 (Plus)
Identifier:	A573BVAY MC56-1 [MC55] (c)Microcom 07/06/99
Algorithm:	Event Count
Data type:	Axle sensors - Separate (Count)

Profile:

Filter time:	**19:00 Tuesday, November 13, 2012 => 6:00 Friday, November 16, 2012**
Name:	Default Profile
Scheme:	Count events divided by setup divisor
Units:	Non metric (ft, mi, ft/s, mph, lb, ton)
In profile:	Events = 10548 / 10551 (99.98%)

*** Tuesday, November 13, 2012=34 (Incomplete) , 15 minute drops**

0000	0100	0200	0300	0400	0500	0600	0700	0800	0900	1000	1100	1200	1300	1400	1500	1600	1700	1800	1900	2000	2100	2200	2300	
-	-	-	-	-	-	-	-	-	-	-	-	-	-	-	-	-	-	-	**0**	**0**	**0**	**5**	**29**	
-	-	-	-	-	-	-	-	-	-	-	-	-	-	-	-	-	-	-	0	0	0	0	8	4
-	-	-	-	-	-	-	-	-	-	-	-	-	-	-	-	-	-	-	0	0	0	0	4	7
-	-	-	-	-	-	-	-	-	-	-	-	-	-	-	-	-	-	-	0	0	0	0	12	4
-	-	-	-	-	-	-	-	-	-	-	-	-	-	-	-	-	-	-	0	0	0	5	5	6

*** Wednesday, November 14, 2012=5235, 15 minute drops**

0000	0100	0200	0300	0400	0500	0600	0700	0800	0900	1000	1100	1200	1300	1400	1500	1600	1700	1800	1900	2000	2100	2200	2300	
21	**10**	**10**	**8**	**15**	**66**	**169**	**339**	**406**	**330**	**293**	**350**	**439**	**424**	**345**	**356**	**436**	**457**	**286**	**200**	**108**	**84**	**67**	**20**	
4	2	1	3	2	6	24	64	110	87	82	77	**112**	104	87	97	112	**146**	95	59	32	24	20	9	4
7	2	3	1	5	8	36	81	100	73	60	64	**122**	107	82	60	83	**119**	71	49	29	24	28	3	5
4	2	2	3	2	18	46	78	96	72	59	94	**98**	102	102	104	**132**	104	75	54	26	15	10	3	5
6	4	4	1	6	34	64	118	100	98	93	**117**	107	112	75	95	**109**	89	45	38	21	21	9	5	1

AM Peak 1145 - 1245 (448), AM PHF=0.92 PM Peak 1630 - 1730 (505), PM PHF=0.87

*** Thursday, November 15, 2012=5254, 15 minute drops**

0000	0100	0200	0300	0400	0500	0600	0700	0800	0900	1000	1100	1200	1300	1400	1500	1600	1700	1800	1900	2000	2100	2200	2300	
15	**14**	**9**	**4**	**21**	**63**	**176**	**377**	**412**	**280**	**282**	**386**	**457**	**424**	**356**	**392**	**428**	**416**	**273**	**158**	**129**	**105**	**51**	**31**	
4	2	3	2	9	5	23	86	96	73	76	81	**112**	**117**	111	103	103	125	79	57	32	31	18	7	10
5	7	3	1	1	21	40	95	100	72	61	99	**114**	114	79	83	96	95	74	43	26	23	12	10	8
5	2	1	1	3	15	46	96	104	79	68	**116**	**107**	96	94	113	116	102	74	33	36	28	9	6	1
1	3	2	0	8	23	68	100	113	56	81	**91**	**125**	97	72	93	113	95	47	26	35	24	12	8	0

AM Peak 1130 - 1230 (433), AM PHF=0.92 PM Peak 1215 - 1315 (462), PM PHF=0.93

*** Friday, November 16, 2012=19 (Incomplete) , 15 minute drops**

0000	0100	0200	0300	0400	0500	0600	0700	0800	0900	1000	1100	1200	1300	1400	1500	1600	1700	1800	1900	2000	2100	2200	2300	
19	**0**	**0**	**0**	**0**	-	-	-	-	-	-	-	-	-	-	-	-	-	-	-	-	-	-	-	
10	0	0	0	0	0	-	-	-	-	-	-	-	-	-	-	-	-	-	-	-	-	-	-	-
8	0	0	0	0	0	-	-	-	-	-	-	-	-	-	-	-	-	-	-	-	-	-	-	-
1	0	0	0	0	0	-	-	-	-	-	-	-	-	-	-	-	-	-	-	-	-	-	-	-
0	0	0	0	0	0	-	-	-	-	-	-	-	-	-	-	-	-	-	-	-	-	-	-	-

True Count
Event Counts

EventCount-27 -- English (ENU)

Datasets:
Site: **[04603S] !Loc 16 Mission Ctr Rd Btwn Friars Rd & Mission Ctr Drwy**
Attribute: KOA
Input A: 3 - South bound. - Lane= 0, Added to totals. (/2.000)
Input B: 0 - Unused or unknown. - Lane= 0, Excluded from totals.
Survey Duration: 18:42 Tuesday, November 13, 2012 => 10:27 Saturday, November 17, 2012
Zone:
File: D:\Traffic Data\McData\KOA\2012\046\UM04603Sb17.EC0 (Plus)
Identifier: M299DS4P MC56-6 [MC55] (c)Microcom 02/03/01
Algorithm: Event Count
Data type: Axle sensors - Separate (Count)

Profile:
Filter time: **19:00 Tuesday, November 13, 2012 => 10:00 Saturday, November 17, 2012**
Name: Default Profile
Scheme: Count events divided by setup divisor
Units: Non metric (ft, mi, ft/s, mph, lb, ton)
In profile: Events = 23606 / 23611 (99.98%)

*** Tuesday, November 13, 2012=1 (Incomplete) , 15 minute drops**

0000	0100	0200	0300	0400	0500	0600	0700	0800	0900	1000	1100	1200	1300	1400	1500	1600	1700	1800	1900	2000	2100	2200	2300	
-	-	-	-	-	-	-	-	-	-	-	-	-	-	-	-	-	-	-	**0**	**0**	**1**	**0**	**0**	
-	-	-	-	-	-	-	-	-	-	-	-	-	-	-	-	-	-	-	0	0	0	0	0	1
-	-	-	-	-	-	-	-	-	-	-	-	-	-	-	-	-	-	-	0	0	0	0	0	0
-	-	-	-	-	-	-	-	-	-	-	-	-	-	-	-	-	-	-	0	0	0	0	0	0
-	-	-	-	-	-	-	-	-	-	-	-	-	-	-	-	-	-	-	0	0	1	0	0	0

*** Wednesday, November 14, 2012=11458, 15 minute drops**

0000	0100	0200	0300	0400	0500	0600	0700	0800	0900	1000	1100	1200	1300	1400	1500	1600	1700	1800	1900	2000	2100	2200	2300	
1	**21**	**20**	**15**	**41**	**107**	**235**	**436**	**516**	**591**	**613**	**881**	**931**	**830**	**804**	**802**	**1105**	**1159**	**703**	**579**	**389**	**417**	**189**	**78**	
1	0	7	2	9	19	43	80	132	122	161	168	**293**	203	196	226	226	**340**	224	135	124	100	63	33	18
0	7	2	4	3	22	52	101	128	164	133	181	**238**	209	217	190	248	**323**	182	156	107	116	67	11	31
0	9	9	3	11	35	72	123	133	150	170	**247**	205	223	194	201	**287**	271	165	161	77	107	34	19	19
0	5	2	6	19	31	69	133	123	155	149	**286**	196	197	198	185	**344**	226	133	128	82	94	26	16	14

AM Peak 1130 - 1230 (1063), AM PHF=0.91 PM Peak 1630 - 1730 (1294), PM PHF=0.94

*** Thursday, November 15, 2012=12079, 15 minute drops**

0000	0100	0200	0300	0400	0500	0600	0700	0800	0900	1000	1100	1200	1300	1400	1500	1600	1700	1800	1900	2000	2100	2200	2300	
82	**31**	**24**	**24**	**40**	**104**	**206**	**472**	**543**	**617**	**581**	**832**	**1099**	**922**	**864**	**868**	**1097**	**1215**	**793**	**533**	**408**	**389**	**220**	**119**	
18	7	14	11	6	13	30	88	135	124	128	169	**306**	247	196	206	289	**406**	262	155	112	115	95	36	13
31	12	5	3	4	27	41	110	150	148	157	165	**258**	227	202	212	228	**307**	202	156	105	84	51	29	12
19	9	3	4	6	33	69	143	140	188	118	**262**	258	224	245	234	**274**	270	185	110	87	93	31	34	13
14	4	3	6	25	31	66	132	118	158	179	**237**	278	225	222	216	**307**	232	145	113	104	98	44	21	12

AM Peak 1130 - 1230 (1062), AM PHF=0.87 PM Peak 1630 - 1730 (1294), PM PHF=0.80

*** Friday, November 16, 2012=64, 15 minute drops**

0000	0100	0200	0300	0400	0500	0600	0700	0800	0900	1000	1100	1200	1300	1400	1500	1600	1700	1800	1900	2000	2100	2200	2300	
50	**14**	**0**	**0**	**0**	**0**	**1**	**0**	**0**	**0**	**0**	**0**	**0**	**0**	**0**	**0**	**0**	**0**	**0**	**0**	**0**	**0**	**0**	**0**	
13	**14**	0	0	0	0	0	0	0	0	0	0	0	0	0	0	0	0	0	0	0	0	0	0	0
12	0	0	0	0	0	0	0	0	0	0	0	0	0	0	0	0	0	0	0	0	0	0	0	0
13	0	0	0	0	0	0	0	0	0	0	0	0	0	0	0	0	0	0	0	0	0	0	0	0
12	0	0	0	0	0	1	0	0	0	0	0	0	0	0	0	0	0	0	0	0	0	0	0	0

AM Peak 0015 - 0115 (51), AM PHF=0.94 PM Peak 0000 - 0100 (0), PM PHF=-1.#J

*** Saturday, November 17, 2012=0 (Incomplete) , 15 minute drops**

0000	0100	0200	0300	0400	0500	0600	0700	0800	0900	1000	1100	1200	1300	1400	1500	1600	1700	1800	1900	2000	2100	2200	2300	
0	**0**	**0**	**0**	**0**	**0**	**0**	**0**	**0**	**0**	-	-	-	-	-	-	-	-	-	-	-	-	-	-	
0	0	0	0	0	0	0	0	0	0	-	-	-	-	-	-	-	-	-	-	-	-	-	-	-
0	0	0	0	0	0	0	0	0	0	-	-	-	-	-	-	-	-	-	-	-	-	-	-	-
0	0	0	0	0	0	0	0	0	0	-	-	-	-	-	-	-	-	-	-	-	-	-	-	-
0	0	0	0	0	0	0	0	0	0	-	-	-	-	-	-	-	-	-	-	-	-	-	-	-

True Count
Event Counts

EventCount-27 -- English (ENU)

Datasets:
Site: **[04603N] !Loc 16 Mission Ctr Rd Btwn Friars Rd & Mission Ctr Drwy**
Attribute: KOA
Input A: 1 - North bound. - Lane= 0, Added to totals. (/2.000)
Input B: 0 - Unused or unknown. - Lane= 0, Excluded from totals.
Survey Duration: 18:43 Tuesday, November 13, 2012 => 9:04 Saturday, November 17, 2012
Zone:
File: D:\Traffic Data\McData\KOA\2012\046\UM04603Nb17.EC0 (Plus)
Identifier: A594KV0T MC56-1 [MC55] (c)Microcom 07/06/99
Algorithm: Event Count
Data type: Axle sensors - Separate (Count)

Profile:
Filter time: **19:00 Tuesday, November 13, 2012 => 6:00 Friday, November 16, 2012**
Name: Default Profile
Scheme: Count events divided by setup divisor
Units: Non metric (ft, mi, ft/s, mph, lb, ton)
In profile: Events = 21221 / 21226 (99.98%)

*** Tuesday, November 13, 2012=0 (Incomplete) , 15 minute drops**

0000	0100	0200	0300	0400	0500	0600	0700	0800	0900	1000	1100	1200	1300	1400	1500	1600	1700	1800	1900	2000	2100	2200	2300	
-	-	-	-	-	-	-	-	-	-	-	-	-	-	-	-	-	-	-	**0**	**0**	**0**	**0**	**0**	
-	-	-	-	-	-	-	-	-	-	-	-	-	-	-	-	-	-	-	0	0	0	0	0	0
-	-	-	-	-	-	-	-	-	-	-	-	-	-	-	-	-	-	-	0	0	0	0	0	0
-	-	-	-	-	-	-	-	-	-	-	-	-	-	-	-	-	-	-	0	0	0	0	0	0
-	-	-	-	-	-	-	-	-	-	-	-	-	-	-	-	-	-	-	0	0	0	0	0	0

*** Wednesday, November 14, 2012=10461, 15 minute drops**

0000	0100	0200	0300	0400	0500	0600	0700	0800	0900	1000	1100	1200	1300	1400	1500	1600	1700	1800	1900	2000	2100	2200	2300	
0	**23**	**12**	**19**	**45**	**79**	**342**	**685**	**707**	**597**	**507**	**618**	**912**	**860**	**685**	**687**	**826**	**973**	**646**	**459**	**317**	**238**	**155**	**74**	
0	1	6	4	9	12	60	136	221	160	111	166	**199**	227	160	168	213	215	**221**	138	91	60	45	24	13
0	6	5	5	11	13	77	164	170	140	129	138	**217**	214	184	157	186	**278**	179	121	80	54	45	11	17
0	8	0	6	12	18	85	173	153	152	124	167	**229**	211	181	181	228	**239**	132	99	73	68	30	27	10
0	9	1	5	14	37	121	213	164	145	144	**148**	268	209	161	182	200	**241**	114	102	73	57	36	12	15

AM Peak 1145 - 1245 (792), AM PHF=0.87 PM Peak 1715 - 1815 (979), PM PHF=0.88

*** Thursday, November 15, 2012=10680, 15 minute drops**

0000	0100	0200	0300	0400	0500	0600	0700	0800	0900	1000	1100	1200	1300	1400	1500	1600	1700	1800	1900	2000	2100	2200	2300	
55	**42**	**26**	**15**	**54**	**95**	**346**	**710**	**750**	**617**	**547**	**631**	**896**	**853**	**705**	**733**	**811**	**891**	**570**	**460**	**344**	**273**	**172**	**89**	
13	12	10	3	14	17	73	115	182	178	144	145	**204**	**251**	179	165	211	230	172	119	76	73	58	24	21
17	10	2	2	8	16	70	174	185	140	136	139	**217**	**234**	185	184	196	207	140	110	74	71	32	25	27
10	11	7	1	15	22	93	190	168	133	128	172	**232**	200	180	213	210	228	138	129	89	67	38	19	10
15	9	8	9	18	41	131	232	215	167	140	**175**	**243**	169	162	170	196	227	121	102	105	62	45	21	7

AM Peak 1145 - 1245 (828), AM PHF=0.89 PM Peak 1230 - 1330 (959), PM PHF=0.96

*** Friday, November 16, 2012=76 (Incomplete) , 15 minute drops**

0000	0100	0200	0300	0400	0500	0600	0700	0800	0900	1000	1100	1200	1300	1400	1500	1600	1700	1800	1900	2000	2100	2200	2300	
64	**13**	**0**	**0**	**0**	**0**	-	-	-	-	-	-	-	-	-	-	-	-	-	-	-	-	-	-	
21	13	0	0	0	0	-	-	-	-	-	-	-	-	-	-	-	-	-	-	-	-	-	-	-
27	0	0	0	0	0	-	-	-	-	-	-	-	-	-	-	-	-	-	-	-	-	-	-	-
10	0	0	0	0	0	-	-	-	-	-	-	-	-	-	-	-	-	-	-	-	-	-	-	-
7	0	0	0	0	0	-	-	-	-	-	-	-	-	-	-	-	-	-	-	-	-	-	-	-

True Count
Event Counts

EventCount-27 -- English (ENU)

Datasets:
Site: **[04601] Loc 5 Friars Rd Btwn Qualcom Wy & Rio Bonito Wy**
Attribute: KOA
Input A: 2 - East bound. - Lane= 0, Excluded from totals.
Input B: 4 - West bound. - Lane= 0, Added to totals. (/2.000)
Survey Duration: 18:53 Tuesday, November 13, 2012 => 9:20 Saturday, November 17, 2012
Zone:
File: D:\Traffic Data\McData\KOA\2012\046\UM04601b17.EC0 (Plus)
Identifier: M8251KH4 MC56-6 [MC55] (c)Microcom 02/03/01
Algorithm: Event Count
Data type: Axle sensors - Separate (Count)

Profile:
Filter time: **19:00 Tuesday, November 13, 2012 => 6:00 Friday, November 16, 2012**
Name: Default Profile
Scheme: Count events divided by setup divisor
Units: Non metric (ft, mi, ft/s, mph, lb, ton)
In profile: Events = 70171 / 70175 (99.99%)

*** Tuesday, November 13, 2012=121 (Incomplete) , 15 minute drops**

0000	0100	0200	0300	0400	0500	0600	0700	0800	0900	1000	1100	1200	1300	1400	1500	1600	1700	1800	1900	2000	2100	2200	2300	
-	-	-	-	-	-	-	-	-	-	-	-	-	-	-	-	-	-	-	**0**	**0**	**2**	**46**	**74**	
-	-	-	-	-	-	-	-	-	-	-	-	-	-	-	-	-	-	-	0	0	0	0	23	17
-	-	-	-	-	-	-	-	-	-	-	-	-	-	-	-	-	-	-	0	0	0	0	24	10
-	-	-	-	-	-	-	-	-	-	-	-	-	-	-	-	-	-	-	0	0	0	18	12	15
-	-	-	-	-	-	-	-	-	-	-	-	-	-	-	-	-	-	-	0	0	2	28	15	9

*** Wednesday, November 14, 2012=15759, 15 minute drops**

0000	0100	0200	0300	0400	0500	0600	0700	0800	0900	1000	1100	1200	1300	1400	1500	1600	1700	1800	1900	2000	2100	2200	2300	
51	**24**	**18**	**23**	**66**	**179**	**565**	**1191**	**1213**	**850**	**882**	**1101**	**1172**	**1103**	**1029**	**1056**	**1173**	**1301**	**1002**	**692**	**470**	**314**	**186**	**101**	
17	9	6	6	7	20	85	222	**332**	212	210	248	281	281	245	246	272	**320**	282	184	153	93	69	29	13
10	5	5	8	10	35	111	288	**313**	212	197	266	274	291	247	243	285	**335**	268	185	122	66	58	19	13
15	9	3	5	22	53	163	**338**	294	201	238	308	298	267	271	293	323	**327**	214	174	94	90	32	31	19
9	1	4	4	27	71	207	**344**	275	225	238	280	319	264	267	274	293	**320**	239	150	102	65	28	22	7

AM Peak 0730 - 0830 (1327), AM PHF=0.96 PM Peak 1700 - 1800 (1301), PM PHF=0.97

*** Thursday, November 15, 2012=16159, 15 minute drops**

0000	0100	0200	0300	0400	0500	0600	0700	0800	0900	1000	1100	1200	1300	1400	1500	1600	1700	1800	1900	2000	2100	2200	2300	
52	**35**	**27**	**19**	**71**	**201**	**585**	**1144**	**1216**	**814**	**843**	**1029**	**1210**	**1148**	**1131**	**1163**	**1264**	**1300**	**990**	**703**	**540**	**355**	**204**	**122**	
13	11	6	1	15	32	98	205	**332**	211	189	233	288	313	288	293	329	**343**	308	187	137	120	80	37	17
13	9	2	3	10	43	125	272	**315**	197	207	263	313	294	279	288	296	**343**	262	198	151	78	41	37	4
19	5	11	5	20	50	160	**327**	305	189	208	252	285	263	273	296	306	**314**	235	156	124	89	49	28	0
7	10	8	10	26	76	204	**340**	265	217	239	282	325	279	292	297	**335**	301	185	162	129	69	34	20	1

AM Peak 0730 - 0830 (1314), AM PHF=0.97 PM Peak 1645 - 1745 (1334), PM PHF=0.97

*** Friday, November 16, 2012=21 (Incomplete) , 15 minute drops**

0000	0100	0200	0300	0400	0500	0600	0700	0800	0900	1000	1100	1200	1300	1400	1500	1600	1700	1800	1900	2000	2100	2200	2300	
21	**0**	**0**	**0**	**0**	**0**	-	-	-	-	-	-	-	-	-	-	-	-	-	-	-	-	-	-	
17	0	0	0	0	0	-	-	-	-	-	-	-	-	-	-	-	-	-	-	-	-	-	-	-
4	0	0	0	0	0	-	-	-	-	-	-	-	-	-	-	-	-	-	-	-	-	-	-	-
0	0	0	0	0	0	-	-	-	-	-	-	-	-	-	-	-	-	-	-	-	-	-	-	-
1	0	0	0	0	0	-	-	-	-	-	-	-	-	-	-	-	-	-	-	-	-	-	-	-

True Count
Event Counts

EventCount-27 -- English (ENU)

Datasets:
Site: **[04601] Loc 5 Friars Rd Btwn Qualcom Wy & Rio Bonito Wy**
Attribute: KOA
Input A: 2 - East bound. - Lane= 0, Added to totals. (/2.000)
Input B: 4 - West bound. - Lane= 0, Excluded from totals.
Survey Duration: 18:53 Tuesday, November 13, 2012 => 9:20 Saturday, November 17, 2012
Zone:
File: D:\Traffic Data\McData\KOA\2012\046\UM04601b17.EC0 (Plus)
Identifier: M8251KH4 MC56-6 [MC55] (c)Microcom 02/03/01
Algorithm: Event Count
Data type: Axle sensors - Separate (Count)

Profile:
Filter time: **19:00 Tuesday, November 13, 2012 => 6:00 Friday, November 16, 2012**
Name: Default Profile
Scheme: Count events divided by setup divisor
Units: Non metric (ft, mi, ft/s, mph, lb, ton)
In profile: Events = 70171 / 70175 (99.99%)

*** Tuesday, November 13, 2012=267 (Incomplete) , 15 minute drops**

0000	0100	0200	0300	0400	0500	0600	0700	0800	0900	1000	1100	1200	1300	1400	1500	1600	1700	1800	1900	2000	2100	2200	2300	
-	-	-	-	-	-	-	-	-	-	-	-	-	-	-	-	-	-	-	**0**	**0**	**1**	**105**	**162**	
-	-	-	-	-	-	-	-	-	-	-	-	-	-	-	-	-	-	-	0	0	0	0	59	35
-	-	-	-	-	-	-	-	-	-	-	-	-	-	-	-	-	-	-	0	0	0	0	42	20
-	-	-	-	-	-	-	-	-	-	-	-	-	-	-	-	-	-	-	0	0	0	46	40	27
-	-	-	-	-	-	-	-	-	-	-	-	-	-	-	-	-	-	-	0	0	1	59	21	17

*** Wednesday, November 14, 2012=18591, 15 minute drops**

0000	0100	0200	0300	0400	0500	0600	0700	0800	0900	1000	1100	1200	1300	1400	1500	1600	1700	1800	1900	2000	2100	2200	2300	
98	**50**	**30**	**33**	**44**	**109**	**353**	**705**	**783**	**747**	**946**	**1226**	**1421**	**1442**	**1291**	**1413**	**1822**	**1927**	**1347**	**1009**	**751**	**558**	**321**	**171**	
35	16	9	11	11	18	60	145	192	177	216	286	**326**	347	327	330	405	**553**	392	284	222	132	111	52	36
20	14	6	8	4	18	68	177	197	187	233	299	**382**	362	326	363	452	**465**	389	262	203	154	97	44	40
27	6	10	2	13	23	81	192	191	171	238	315	**344**	367	324	356	**483**	467	294	233	167	151	58	47	31
17	14	5	12	16	51	145	192	204	213	259	**327**	370	366	314	365	**483**	442	272	230	160	122	56	28	17

AM Peak 1145 - 1245 (1377), AM PHF=0.90 PM Peak 1630 - 1730 (1983), PM PHF=0.90

*** Thursday, November 15, 2012=19204, 15 minute drops**

0000	0100	0200	0300	0400	0500	0600	0700	0800	0900	1000	1100	1200	1300	1400	1500	1600	1700	1800	1900	2000	2100	2200	2300	
124	**62**	**50**	**28**	**40**	**116**	**356**	**644**	**768**	**772**	**987**	**1185**	**1485**	**1446**	**1364**	**1497**	**1768**	**1950**	**1522**	**1028**	**800**	**662**	**352**	**203**	
35	24	9	4	5	11	56	120	180	167	234	302	**359**	356	358	351	423	**501**	469	259	221	162	114	70	47
40	13	16	10	10	28	69	151	203	176	227	267	**364**	354	348	369	451	**527**	414	303	237	191	111	51	3
31	8	19	5	7	27	103	167	195	206	256	278	**364**	397	331	416	431	**481**	333	240	173	170	68	40	0
17	17	6	10	18	50	129	207	191	224	272	**339**	398	340	327	362	**463**	442	309	227	170	140	59	44	1

AM Peak 1145 - 1245 (1426), AM PHF=0.98 PM Peak 1645 - 1745 (1970), PM PHF=0.94

*** Friday, November 16, 2012=50 (Incomplete) , 15 minute drops**

0000	0100	0200	0300	0400	0500	0600	0700	0800	0900	1000	1100	1200	1300	1400	1500	1600	1700	1800	1900	2000	2100	2200	2300	
50	**0**	**0**	**0**	**0**	**0**	-	-	-	-	-	-	-	-	-	-	-	-	-	-	-	-	-	-	
47	0	0	0	0	0	-	-	-	-	-	-	-	-	-	-	-	-	-	-	-	-	-	-	-
3	0	0	0	0	0	-	-	-	-	-	-	-	-	-	-	-	-	-	-	-	-	-	-	-
0	0	0	0	0	0	-	-	-	-	-	-	-	-	-	-	-	-	-	-	-	-	-	-	-
1	0	0	0	0	0	-	-	-	-	-	-	-	-	-	-	-	-	-	-	-	-	-	-	-

THURSDAY, MAY 30TH, 2013 CITY: KEARNY MESA PROJECT: PTD13-0531-01

MURRAY RIDGE N-O LARKDALE

AM Period	NB		SB		EB	WB		PM Period	NB		SB		EB	WB	
00:00	24		10					12:00	82		63				
00:15	12		9					12:15	69		41				
00:30	12		3					12:30	77		57				
00:45	9	57	3	25			82	12:45	50	278	64	225			503
01:00	7		4					13:00	73		61				
01:15	12		4					13:15	66		60				
01:30	3		3					13:30	61		61				
01:45	6	28	2	13			41	13:45	71	271	65	247			518
02:00	6		3					14:00	73		58				
02:15	3		2					14:15	75		71				
02:30	9		4					14:30	79		68				
02:45	3	21	1	10			31	14:45	80	307	85	282			589
03:00	4		2					15:00	74		76				
03:15	6		5					15:15	70		57				
03:30	4		1					15:30	96		58				
03:45	4	18	2	10			28	15:45	85	325	74	265			590
04:00	3		8					16:00	101		92				
04:15	2		6					16:15	111		97				
04:30	1		6					16:30	88		105				
04:45	3	9	10	30			39	16:45	103	403	100	394			797
05:00	5		17					17:00	105		108				
05:15	6		22					17:15	113		120				
05:30	11		18					17:30	102		141				
05:45	7	29	37	94			123	17:45	106	426	125	494			920
06:00	16		35					18:00	82		107				
06:15	23		44					18:15	88		87				
06:30	18		52					18:30	75		81				
06:45	38	95	46	177			272	18:45	67	312	64	339			651
07:00	73		90					19:00	49		65				
07:15	99		116					19:15	61		57				
07:30	121		90					19:30	60		43				
07:45	118	411	89	385			796	19:45	53	223	45	210			433
08:00	101		80					20:00	59		35				
08:15	102		85					20:15	52		27				
08:30	105		65					20:30	56		45				
08:45	98	406	60	290			696	20:45	56	223	32	139			362
09:00	86		65					21:00	62		36				
09:15	70		43					21:15	36		35				
09:30	62		70					21:30	58		38				
09:45	49	267	64	242			509	21:45	37	193	27	136			329
10:00	50		51					22:00	36		28				
10:15	51		42					22:15	32		18				
10:30	51		52					22:30	39		25				
10:45	46	198	69	214			412	22:45	25	132	16	87			219
11:00	58		50					23:00	28		19				
11:15	52		44					23:15	15		14				
11:30	59		51					23:30	15		11				
11:45	68	237	53	198			435	23:45	12	70	13	57			127
Total Vol.	1776		1688				**3464**		3163		2875				**6038**

Daily Totals	NB	SB	EB	WB	Combined
AM	4939	4563			**9502**
PM	12115	12129			**24244**

	AM			PM		
Split %	51.3%	48.7%	**36.5%**	52.4%	47.6%	**63.5%**
Peak Hour	07:30	07:00	**07:15**	17:00	17:00	**17:00**
Volume	442	385	**814**	426	494	**920**
P.H.F.	0.91	0.83	**0.95**	0.93	0.88	**0.95**

PACIFIC TECHNICAL DATA

WEDNESDAY, JUNE 12TH, 2013 CITY: MISSION VALLEY PROJECT: PTD13-0614-01

MISSION CENTER S-O I-8 RAMPS

AM Period	NB		SB		EB	WB		PM Period	NB		SB		EB	WB	
00:00	44		24					12:00	184		195				
00:15	51		13					12:15	195		171				
00:30	42		25					12:30	177		179				
00:45	35	172	22	84			256	12:45	165	721	207	752			1473
01:00	31		16					13:00	184		220				
01:15	25		17					13:15	195		211				
01:30	20		13					13:30	162		187				
01:45	19	95	8	54			149	13:45	222	763	188	806			1569
02:00	22		6					14:00	218		215				
02:15	16		5					14:15	221		191				
02:30	11		3					14:30	206		172				
02:45	9	58	7	21			79	14:45	184	829	188	766			1595
03:00	12		11					15:00	195		209				
03:15	15		6					15:15	166		214				
03:30	11		1					15:30	175		223				
03:45	8	46	6	24			70	15:45	195	731	198	844			1575
04:00	9		7					16:00	205		226				
04:15	8		7					16:15	218		171				
04:30	7		8					16:30	222		222				
04:45	5	29	15	37			66	16:45	206	851	243	862			1713
05:00	12		12					17:00	195		207				
05:15	18		27					17:15	215		190				
05:30	22		29					17:30	235		201				
05:45	35	87	38	106			193	17:45	184	829	283	881			1710
06:00	68		65					18:00	195		318				
06:15	95		56					18:15	177		248				
06:30	121		55					18:30	184		204				
06:45	115	399	83	259			658	18:45	195	751	207	977			1728
07:00	135		112					19:00	161		159				
07:15	148		142					19:15	177		158				
07:30	184		175					19:30	154		152				
07:45	195	662	155	584			1246	19:45	135	627	148	617			1244
08:00	222		216					20:00	141		132				
08:15	218		243					20:15	135		123				
08:30	202		205					20:30	111		140				
08:45	216	858	243	907			1765	20:45	108	495	136	531			1026
09:00	203		243					21:00	116		128				
09:15	198		162					21:15	121		108				
09:30	174		176					21:30	103		99				
09:45	151	726	158	739			1465	21:45	99	439	68	403			842
10:00	184		177					22:00	95		88				
10:15	162		156					22:15	84		71				
10:30	177		159					22:30	88		74				
10:45	184	707	186	678			1385	22:45	84	351	67	300			651
11:00	195		192					23:00	65		42				
11:15	162		195					23:15	44		39				
11:30	177		184					23:30	51		35				
11:45	151	685	180	751			1436	23:45	44	204	30	146			350
Total Vol.	4524		4244				**8768**		7591		7885				**15476**

Daily Totals	NB	SB	EB	WB	Combined
AM	12115	12129			**24244**
PM					

	AM			PM		
Split %	51.6%	48.4%	**36.2%**	49.1%	50.9%	**63.8%**
Peak Hour	08:00	08:15	**08:15**	13:45	17:45	**17:30**
Volume	858	934	**1773**	867	1053	**1841**
P.H.F.	0.97	0.96	**0.96**	0.99	0.83	**0.90**

PACIFIC TECHNICAL DATA

THURSDAY, MAY 30TH, 2013 CITY: KEARNY MESA PROJECT: PTD13-0531-01

SANDROCK N-O GLENHAVEN

AM Period	NB		SB		EB	WB		PM Period	NB		SB		EB	WB	
00:00	12		20					12:00	85		65				
00:15	3		10					12:15	68		68				
00:30	2		5					12:30	100		92				
00:45	4	21	9	44			65	12:45	89	342	71	296			638
01:00	2		7					13:00	76		76				
01:15	8		4					13:15	91		82				
01:30	3		9					13:30	78		68				
01:45	4	17	7	27			44	13:45	72	317	85	311			628
02:00	6		5					14:00	71		71				
02:15	2		6					14:15	83		90				
02:30	3		5					14:30	88		67				
02:45	1	12	5	21			33	14:45	66	308	78	306			614
03:00	4		2					15:00	81		98				
03:15	3		4					15:15	58		87				
03:30	3		1					15:30	86		90				
03:45	7	17	3	10			27	15:45	90	315	114	389			704
04:00	6		2					16:00	95		139				
04:15	5		2					16:15	77		119				
04:30	1		2					16:30	72		195				
04:45	7	19	2	8			27	16:45	103	347	184	637			984
05:00	11		1					17:00	80		262				
05:15	16		7					17:15	91		182				
05:30	11		4					17:30	95		199				
05:45	18	56	5	17			73	17:45	80	346	153	796			1142
06:00	43		10					18:00	79		178				
06:15	41		11					18:15	84		138				
06:30	34		9					18:30	66		135				
06:45	56	174	17	47			221	18:45	53	282	70	521			803
07:00	100		66					19:00	44		67				
07:15	138		74					19:15	55		71				
07:30	161		68					19:30	46		63				
07:45	184	583	62	270			853	19:45	43	188	54	255			443
08:00	166		66					20:00	34		63				
08:15	152		58					20:15	45		51				
08:30	144		108					20:30	40		40				
08:45	138	600	77	309			909	20:45	30	149	38	192			341
09:00	130		76					21:00	40		40				
09:15	101		58					21:15	36		38				
09:30	75		48					21:30	29		36				
09:45	69	375	47	229			604	21:45	13	118	24	138			256
10:00	73		40					22:00	21		34				
10:15	55		57					22:15	19		20				
10:30	62		59					22:30	9		24				
10:45	62	252	54	210			462	22:45	18	67	24	102			169
11:00	72		56					23:00	12		27				
11:15	60		50					23:15	7		13				
11:30	79		73					23:30	11		16				
11:45	71	282	73	252			534	23:45	10	40	16	72			112
Total Vol.	2408		1444				**3852**		2819		4015				**6834**

Daily Totals	NB	SB	EB	WB	Combined
AM	5227	5459			**10686**
PM					

	AM			PM		
Split %	62.5%	37.5%	**36.0%**	41.2%	58.8%	**64.0%**
Peak Hour	07:30	08:15	**07:45**	16:45	16:45	**16:45**
Volume	663	319	**940**	369	827	**1196**
P.H.F.	0.90	0.74	**0.93**	0.89	0.79	**0.87**

PACIFIC TECHNICAL DATA

THURSDAY, MAY 30TH, 2013 CITY: KEARNY MESA PROJECT: PTD13-0531-01

AREO W-O SANDROCK

AM Period	NB		SB		EB	WB		PM Period	NB		SB		EB	WB	
00:00					20	12		12:00					169	194	
00:15					34	15		12:15					211	193	
00:30					23	9		12:30					203	195	
00:45					17	94	3	39	133	12:45			188	771	214	796	1567
01:00					14	7		13:00					184	186	
01:15					12	16		13:15					201	180	
01:30					15	8		13:30					192	182	
01:45					13	54	6	37	91	13:45			195	772	167	715	1487
02:00					7	7		14:00					188	173	
02:15					9	5		14:15					179	169	
02:30					13	9		14:30					152	169	
02:45					10	39	3	24	63	14:45			157	676	158	669	1345
03:00					7	5		15:00					159	197	
03:15					6	2		15:15					184	171	
03:30					6	2		15:30					187	181	
03:45					10	29	14	23	52	15:45			223	753	184	733	1486
04:00					2	13		16:00					230	206	
04:15					4	8		16:15					248	199	
04:30					11	5		16:30					284	215	
04:45					7	24	15	41	65	16:45			295	1057	204	824	1881
05:00					13	17		17:00					277	235	
05:15					18	28		17:15					318	216	
05:30					12	19		17:30					305	175	
05:45					22	65	31	95	160	17:45			262	1162	162	788	1950
06:00					37	62		18:00					291	189	
06:15					41	79		18:15					240	177	
06:30					57	60		18:30					238	154	
06:45					49	184	111	312	496	18:45			148	917	120	640	1557
07:00					89	168		19:00					149	94	
07:15					105	222		19:15					138	109	
07:30					169	235		19:30					136	113	
07:45					160	523	268	893	1416	19:45			98	521	118	434	955
08:00					153	275		20:00					120	76	
08:15					142	277		20:15					93	91	
08:30					184	253		20:30					95	78	
08:45					177	656	204	1009	1665	20:45			91	399	70	315	714
09:00					184	195		21:00					107	83	
09:15					160	159		21:15					79	74	
09:30					147	152		21:30					57	57	
09:45					161	652	169	675	1327	21:45			58	301	43	257	558
10:00					151	148		22:00					63	55	
10:15					131	138		22:15					48	47	
10:30					158	122		22:30					47	31	
10:45					129	569	178	586	1155	22:45			41	199	21	154	353
11:00					139	153		23:00					50	24	
11:15					156	157		23:15					36	20	
11:30					142	164		23:30					26	19	
11:45					163	600	170	644	1244	23:45			29	141	16	79	220
Total Vol.					3489		4378		**7867**				7669		6404		**14073**

Daily Totals	NB	SB	EB	WB	Combined
AM			11158	10782	**21940**
PM					

	AM			PM		
Split %	44.3%	55.7%	**35.9%**	54.5%	45.5%	**64.1%**
Peak Hour	11:45	07:45	**07:45**	16:45	16:30	**16:30**
Volume	746	1073	**1712**	1195	870	**2044**
P.H.F.	0.88	0.97	**0.98**	0.94	0.93	**0.96**

PACIFIC TECHNICAL DATA

WEDNESDAY, JUNE 12TH, 2013 CITY: MISSION VALLEY PROJECT: PTD13-0614-01

MISSION CENTER N-O FRIARS

AM Period	NB		SB		EB	WB		PM Period	NB		SB		EB	WB	
00:00	35		25					12:00	183		189				
00:15	12		29					12:15	203		198				
00:30	9		18					12:30	195		186				
00:45	12	68	18	90			158	12:45	225	806	210	783			1589
01:00	13		17					13:00	254		185				
01:15	7		14					13:15	208		197				
01:30	13		5					13:30	206		157				
01:45	5	38	12	48			86	13:45	189	857	159	698			1555
02:00	4		2					14:00	177		170				
02:15	4		3					14:15	193		172				
02:30	7		4					14:30	195		206				
02:45	4	19	3	12			31	14:45	168	733	196	744			1477
03:00	2		5					15:00	170		186				
03:15	5		3					15:15	176		195				
03:30	5		4					15:30	166		207				
03:45	4	16	1	13			29	15:45	180	692	198	786			1478
04:00	6		5					16:00	180		218				
04:15	8		3					16:15	169		212				
04:30	7		4					16:30	192		184				
04:45	20	41	18	30			71	16:45	184	725	210	824			1549
05:00	7		10					17:00	188		248				
05:15	9		16					17:15	196		206				
05:30	7		10					17:30	219		212				
05:45	15	38	23	59			97	17:45	215	818	208	874			1692
06:00	27		15					18:00	221		202				
06:15	52		35					18:15	176		217				
06:30	93		40					18:30	159		165				
06:45	100	272	64	154			426	18:45	117	673	172	756			1429
07:00	126		77					19:00	109		153				
07:15	168		85					19:15	139		123				
07:30	151		115					19:30	132		130				
07:45	184	629	96	373			1002	19:45	133	513	157	563			1076
08:00	177		121					20:00	109		117				
08:15	145		123					20:15	112		129				
08:30	121		95					20:30	91		119				
08:45	111	554	90	429			983	20:45	74	386	104	469			855
09:00	101		99					21:00	91		83				
09:15	121		103					21:15	86		115				
09:30	106		106					21:30	78		63				
09:45	113	441	121	429			870	21:45	74	329	60	321			650
10:00	146		125					22:00	64		57				
10:15	100		123					22:15	56		68				
10:30	108		132					22:30	42		55				
10:45	106	460	155	535			995	22:45	43	205	42	222			427
11:00	111		149					23:00	42		35				
11:15	170		143					23:15	31		34				
11:30	148		175					23:30	17		21				
11:45	159	588	195	662			1250	23:45	26	116	32	122			238
Total Vol.		3164		2834			**5998**		6853		7162				**14015**

Daily Totals	NB	SB	EB	WB	Combined
	10017	9996			**20013**

	AM			PM		
Split %	52.8%	47.2%	**30.0%**	48.9%	51.1%	**70.0%**
Peak Hour	11:45	11:45	**11:45**	12:45	16:45	**17:00**
Volume	740	768	**1508**	893	876	**1692**
P.H.F.	0.91	0.97	**0.94**	0.88	0.88	**0.97**

PACIFIC TECHNICAL DATA

THURSDAY, MAY 30TH, 2013 CITY: KEARNY MESA PROJECT: PTD13-0531-01

AREO E-O SANDROCK

AM Period	NB		SB		EB	WB		PM Period	NB		SB		EB	WB	
00:00					11	16		12:00					169	159	
00:15					21	9		12:15					154	182	
00:30					19	11		12:30					179	173	
00:45					14	65	4	40	105	12:45			172	674	176	690	1364
01:00					13	9		13:00					158	164	
01:15					8	16		13:15					189	158	
01:30					11	11		13:30					185	166	
01:45					10	42	2	38	80	13:45			171	703	138	626	1329
02:00					4	4		14:00					160	147	
02:15					5	4		14:15					150	156	
02:30					11	9		14:30					140	130	
02:45					6	26	3	20	46	14:45			144	594	153	586	1180
03:00					8	6		15:00					143	180	
03:15					4	0		15:15					147	148	
03:30					6	2		15:30					146	147	
03:45					9	27	11	19	46	15:45			204	640	151	626	1266
04:00					2	6		16:00					218	184	
04:15					4	4		16:15					188	179	
04:30					9	3		16:30					223	215	
04:45					9	24	14	27	51	16:45			235	864	203	781	1645
05:00					13	9		17:00					202	235	
05:15					16	14		17:15					216	202	
05:30					22	16		17:30					242	180	
05:45					30	81	31	70	151	17:45			190	850	166	783	1633
06:00					43	55		18:00					184	170	
06:15					41	54		18:15					164	136	
06:30					57	61		18:30					155	148	
06:45					50	191	91	261	452	18:45			118	621	113	567	1188
07:00					93	108		19:00					125	103	
07:15					126	177		19:15					119	95	
07:30					151	142		19:30					111	81	
07:45					177	547	195	622	1169	19:45			79	434	102	381	815
08:00					160	150		20:00					94	77	
08:15					148	182		20:15					102	79	
08:30					153	219		20:30					77	59	
08:45					170	631	158	709	1340	20:45			75	348	61	276	624
09:00					149	179		21:00					91	59	
09:15					135	136		21:15					61	56	
09:30					124	122		21:30					51	59	
09:45					117	525	118	555	1080	21:45			62	265	49	223	488
10:00					136	125		22:00					50	48	
10:15					103	129		22:15					43	41	
10:30					146	105		22:30					43	35	
10:45					99	484	148	507	991	22:45			40	176	27	151	327
11:00					121	130		23:00					36	28	
11:15					125	134		23:15					27	21	
11:30					121	159		23:30					22	23	
11:45					137	504	161	584	1088	23:45			23	108	15	87	195
Total Vol.						3147		3452	**6599**					6277		5777	**12054**

Daily Totals	NB	SB	EB	WB	Combined
			9424	9229	**18653**

	AM			PM		
Split %	47.7%	52.3%	**35.4%**	52.1%	47.9%	**64.6%**
Peak Hour	11:45	07:45	**07:45**	16:45	16:30	**16:30**
Volume	639	746	**1384**	895	855	**1731**
P.H.F.	0.89	0.85	**0.93**	0.92	0.91	**0.99**

PACIFIC TECHNICAL DATA

WEDNESDAY, JUNE 12TH, 2013 CITY: MISSION VALLEY PROJECT: PTD13-0614-01

MISSION CENTER N-O MISSION VALLEY

AM Period	NB		SB		EB	WB		PM Period	NB		SB		EB	WB	
00:00	3		1					12:00	40		75				
00:15	3		5					12:15	52		88				
00:30	5		2					12:30	44		65				
00:45	6	17	3	11			28	12:45	54	190	42	270			460
01:00	5		8					13:00	54		50				
01:15	3		1					13:15	54		54				
01:30	2		0					13:30	60		65				
01:45	0	10	2	11			21	13:45	65	233	54	223			456
02:00	1		1					14:00	77		77				
02:15	0		2					14:15	90		62				
02:30	4		0					14:30	70		48				
02:45	2	7	2	5			12	14:45	77	314	52	239			553
03:00	1		1					15:00	90		54				
03:15	0		1					15:15	126		70				
03:30	1		4					15:30	121		66				
03:45	2	4	5	11			15	15:45	111	448	60	250			698
04:00	4		9					16:00	135		66				
04:15	4		7					16:15	162		84				
04:30	5		9					16:30	177		70				
04:45	6	19	11	36			55	16:45	135	609	81	301			910
05:00	6		15					17:00	199		99				
05:15	11		12					17:15	141		112				
05:30	10		19					17:30	139		98				
05:45	18	45	21	67			112	17:45	152	631	84	393			1024
06:00	12		28					18:00	121		95				
06:15	18		33					18:15	108		77				
06:30	22		35					18:30	99		65				
06:45	35	87	61	157			244	18:45	84	412	54	291			703
07:00	51		84					19:00	70		42				
07:15	56		89					19:15	65		35				
07:30	44		126					19:30	55		22				
07:45	42	193	108	407			600	19:45	45	235	19	118			353
08:00	58		141					20:00	65		12				
08:15	43		135					20:15	35		11				
08:30	38		115					20:30	44		9				
08:45	41	180	112	503			683	20:45	42	186	10	42			228
09:00	44		107					21:00	35		5				
09:15	54		101					21:15	22		5				
09:30	40		88					21:30	28		9				
09:45	35	173	95	391			564	21:45	21	106	6	25			131
10:00	45		95					22:00	19		5				
10:15	40		77					22:15	20		4				
10:30	40		84					22:30	15		2				
10:45	66	191	95	351			542	22:45	11	65	2	13			78
11:00	42		75					23:00	9		2				
11:15	48		84					23:15	5		5				
11:30	52		95					23:30	4		5				
11:45	51	193	77	331			524	23:45	5	23	6	18			41
Total Vol.		1119		2281			**3400**		3452		2183				**5635**

Daily Totals	NB	SB	EB	WB	Combined
	4571	4464			**9035**

	AM			PM		
Split %	32.9%	67.1%	**37.6%**	61.3%	38.7%	**62.4%**
Peak Hour	10:45	07:30	**07:30**	16:15	17:00	**17:00**
Volume	208	510	**697**	673	393	**1024**
P.H.F.	0.79	0.90	**0.88**	0.86	0.88	**0.86**

PACIFIC TECHNICAL DATA

WEDNESDAY, JUNE 12TH, 2013 CITY: MISSION VALLEY PROJECT: PTD13-0614-01

QUALCOMM N-O FRIARS

AM Period	NB		SB		EB	WB		PM Period	NB		SB		EB	WB	
00:00	5		5					12:00	13		20				
00:15	3		7					12:15	10		17				
00:30	0		0					12:30	24		21				
00:45	0	8	4	16			24	12:45	19	66	18	76			142
01:00	4		12					13:00	20		5				
01:15	2		4					13:15	24		7				
01:30	0		5					13:30	15		20				
01:45	4	10	3	24			34	13:45	16	75	20	52			127
02:00	3		2					14:00	16		18				
02:15	2		3					14:15	11		16				
02:30	0		4					14:30	18		19				
02:45	4	9	1	10			19	14:45	20	65	13	66			131
03:00	3		5					15:00	16		8				
03:15	2		6					15:15	12		1				
03:30	18		7					15:30	18		14				
03:45	10	33	15	33			66	15:45	13	59	23	46			105
04:00	4		9					16:00	11		22				
04:15	2		5					16:15	15		7				
04:30	4		0					16:30	9		10				
04:45	1	11	0	14			25	16:45	12	47	6	45			92
05:00	0		0					17:00	12		2				
05:15	1		0					17:15	15		6				
05:30	1		4					17:30	9		2				
05:45	5	7	4	8			15	17:45	12	48	11	21			69
06:00	11		5					18:00	3		6				
06:15	18		7					18:15	1		3				
06:30	15		9					18:30	2		3				
06:45	14	58	5	26			84	18:45	1	7	5	17			24
07:00	12		9					19:00	1		3				
07:15	17		12					19:15	2		5				
07:30	17		11					19:30	1		4				
07:45	12	58	18	50			108	19:45	6	10	0	12			22
08:00	21		11					20:00	9		0				
08:15	19		16					20:15	0		13				
08:30	22		28					20:30	17		15				
08:45	22	84	22	77			161	20:45	8	34	13	41			75
09:00	15		23					21:00	15		20				
09:15	18		27					21:15	12		12				
09:30	16		21					21:30	0		0				
09:45	16	65	18	89			154	21:45	4	31	8	40			71
10:00	19		19					22:00	3		6				
10:15	29		21					22:15	3		5				
10:30	9		18					22:30	2		4				
10:45	21	78	18	76			154	22:45	1	9	1	16			25
11:00	12		18					23:00	0		0				
11:15	13		19					23:15	1		2				
11:30	15		16					23:30	1		3				
11:45	11	51	18	71			122	23:45	2	4	0	5			9
Total Vol.		472		494			**966**		455		437				**892**

Daily Totals	NB	SB	EB	WB	Combined
	927	931			**1858**

	AM			PM		
Split %	48.9%	51.1%	**52.0%**	51.0%	49.0%	**48.0%**
Peak Hour	08:00	08:30	**08:30**	12:30	12:00	**12:00**
Volume	84	100	**177**	87	76	**142**
P.H.F.	0.95	0.89	**0.89**	0.86	0.90	**0.79**

PACIFIC TECHNICAL DATA

WEDNESDAY, JUNE 12TH, 2013 CITY: MISSION VALLEY PROJECT: PTD13-0614-01

FRIARS W-O QUALCOMM

AM Period	NB	SB	EB		WB			PM Period	NB	SB	EB		WB		
00:00			40		27			12:00			274		335		
00:15			29		15			12:15			278		283		
00:30			33		18			12:30			306		333		
00:45			25	127	14	74	201	12:45			318	1176	308	1259	2435
01:00			16		12			13:00			301		354		
01:15			21		8			13:15			372		302		
01:30			16		11			13:30			339		293		
01:45			19	72	10	41	113	13:45			303	1315	294	1243	2558
02:00			19		11			14:00			310		295		
02:15			11		6			14:15			304		278		
02:30			7		15			14:30			325		298		
02:45			9	46	6	38	84	14:45			279	1218	259	1130	2348
03:00			12		6			15:00			284		274		
03:15			4		3			15:15			319		240		
03:30			6		7			15:30			308		279		
03:45			8	30	4	20	50	15:45			334	1245	285	1078	2323
04:00			8		14			16:00			327		330		
04:15			4		2			16:15			361		312		
04:30			8		8			16:30			376		319		
04:45			4	24	17	41	65	16:45			401	1465	314	1275	2740
05:00			14		17			17:00			410		318		
05:15			12		24			17:15			448		310		
05:30			24		31			17:30			475		351		
05:45			25	75	47	119	194	17:45			519	1852	286	1265	3117
06:00			40		71			18:00			446		295		
06:15			58		73			18:15			421		268		
06:30			51		117			18:30			356		259		
06:45			81	230	151	412	642	18:45			309	1532	218	1040	2572
07:00			116		174			19:00			323		221		
07:15			111		199			19:15			254		217		
07:30			149		249			19:30			272		208		
07:45			166	542	311	933	1475	19:45			276	1125	196	842	1967
08:00			214		381			20:00			251		166		
08:15			176		338			20:15			237		183		
08:30			156		344			20:30			228		139		
08:45			187	733	318	1381	2114	20:45			201	917	132	620	1537
09:00			199		290			21:00			196		113		
09:15			157		217			21:15			156		124		
09:30			168		215			21:30			171		114		
09:45			176	700	191	913	1613	21:45			135	658	86	437	1095
10:00			197		199			22:00			112		82		
10:15			211		191			22:15			114		94		
10:30			203		213			22:30			97		96		
10:45			234	845	225	828	1673	22:45			82	405	68	340	745
11:00			235		255			23:00			68		47		
11:15			248		260			23:15			66		50		
11:30			251		271			23:30			50		26		
11:45			252	986	246	1032	2018	23:45			48	232	23	146	378
Total Vol.				4410		5832	**10242**					13140		10675	**23815**

	AM			PM		
Split %	43.1%	56.9%	**30.1%**	55.2%	44.8%	**69.9%**
Peak Hour	11:45	08:00	**11:45**	17:15	12:30	**17:15**
Volume	1110	1381	**2307**	1888	1297	**3130**
P.H.F.	0.91	0.91	**0.90**	0.91	0.92	**0.95**

Daily Totals

NB	SB	EB	WB	Combined
		17550	16507	**34057**

PACIFIC TECHNICAL DATA

WEDNESDAY, JUNE 12TH, 2013 CITY: MISSION VALLEY PROJECT: PTD13-0614-01

QUALCOMM S-O FRIARS

AM Period	NB	SB	EB		WB			PM Period	NB	SB	EB		WB		
00:00	17		16					12:00	161		107				
00:15	13		13					12:15	152		105				
00:30	19		15					12:30	183		124				
00:45	9	58	9	53			111	12:45	154	650	114	450			1100
01:00	7		4					13:00	166		100				
01:15	13		3					13:15	172		125				
01:30	6		8					13:30	172		117				
01:45	7	33	8	23			56	13:45	158	668	114	456			1124
02:00	4		6					14:00	151		100				
02:15	6		4					14:15	130		87				
02:30	2		3					14:30	150		107				
02:45	9	21	0	13			34	14:45	151	582	101	395			977
03:00	6		1					15:00	126		93				
03:15	3		5					15:15	136		99				
03:30	4		4					15:30	123		101				
03:45	4	17	9	19			36	15:45	184	569	116	409			978
04:00	5		2					16:00	143		115				
04:15	1		2					16:15	182		116				
04:30	6		2					16:30	140		107				
04:45	7	19	4	10			29	16:45	159	624	109	447			1071
05:00	6		3					17:00	166		129				
05:15	4		4					17:15	208		148				
05:30	13		6					17:30	205		148				
05:45	23	46	17	30			76	17:45	165	744	168	593			1337
06:00	20		16					18:00	163		134				
06:15	32		22					18:15	168		131				
06:30	49		31					18:30	128		107				
06:45	61	162	28	97			259	18:45	127	586	84	456			1042
07:00	54		56					19:00	126		78				
07:15	88		39					19:15	121		83				
07:30	95		61					19:30	98		77				
07:45	121	358	96	252			610	19:45	96	441	54	292			733
08:00	105		94					20:00	92		36				
08:15	111		86					20:15	63		66				
08:30	115		69					20:30	81		78				
08:45	106	437	63	312			749	20:45	90	326	99	279			605
09:00	111		88					21:00	80		74				
09:15	84		71					21:15	91		75				
09:30	87		69					21:30	81		72				
09:45	72	354	59	287			641	21:45	61	313	53	274			587
10:00	85		85					22:00	52		52				
10:15	101		70					22:15	52		67				
10:30	91		85					22:30	37		49				
10:45	93	370	83	323			693	22:45	27	168	31	199			367
11:00	109		100					23:00	19		21				
11:15	117		91					23:15	25		22				
11:30	140		90					23:30	20		20				
11:45	141	507	105	386			893	23:45	16	80	18	81			161
Total Vol.		2382		1805			**4187**			5751		4331			**10082**

	AM			PM		
Split %	56.9%	43.1%	**29.3%**	57.0%	43.0%	**70.7%**
Peak Hour	11:45	11:45	**11:45**	17:00	17:15	**17:15**
Volume	637	441	**1078**	744	598	**1339**
P.H.F.	0.87	0.89	**0.88**	0.94	0.89	**0.94**

Daily Totals

NB	SB	EB	WB	Combined
		8133	6136	**14269**

PACIFIC TECHNICAL DATA

WEDNESDAY, JUNE 12TH, 2013 CITY: MISSION VALLEY PROJECT: PTD13-0614-01

MURRAY RIDGE BTN I-805 RAMPS

AM Period	NB	SB	EB		WB			PM Period	NB	SB	EB		WB		
00:00			18		13			12:00			67		79		
00:15			13		19			12:15			74		89		
00:30			9		8			12:30			68		92		
00:45			7	47	9	49	96	12:45			84	293	100	360	653
01:00			7		9			13:00			69		105		
01:15			6		9			13:15			68		80		
01:30			3		4			13:30			73		92		
01:45			8	24	2	24	48	13:45			62	272	88	365	637
02:00			6		8			14:00			59		92		
02:15			2		5			14:15			75		96		
02:30			4		4			14:30			65		119		
02:45			3	15	7	24	39	14:45			70	269	106	413	682
03:00			2		6			15:00			68		116		
03:15			5		6			15:15			74		122		
03:30			0		4			15:30			73		119		
03:45			3	10	4	20	30	15:45			59	274	130	487	761
04:00			5		10			16:00			69		140		
04:15			3		8			16:15			68		152		
04:30			2		7			16:30			53		137		
04:45			6	16	22	47	63	16:45			67	257	166	595	852
05:00			3		25			17:00			77		127		
05:15			8		28			17:15			64		164		
05:30			3		41			17:30			58		155		
05:45			21	35	64	158	193	17:45			64	263	137	583	846
06:00			12		69			18:00			64		127		
06:15			15		74			18:15			63		123		
06:30			29		88			18:30			67		103		
06:45			44	100	86	317	417	18:45			57	251	89	442	693
07:00			44		90			19:00			76		79		
07:15			49		89			19:15			56		78		
07:30			67		83			19:30			61		71		
07:45			45	205	102	364	569	19:45			69	262	79	307	569
08:00			67		120			20:00			50		80		
08:15			64		90			20:15			45		66		
08:30			72		91			20:30			45		62		
08:45			55	258	88	389	647	20:45			31	171	59	267	438
09:00			62		111			21:00			31		64		
09:15			56		84			21:15			43		53		
09:30			54		71			21:30			33		52		
09:45			39	211	84	350	561	21:45			35	142	43	212	354
10:00			57		102			22:00			25		53		
10:15			56		80			22:15			26		36		
10:30			52		82			22:30			23		36		
10:45			70	235	93	357	592	22:45			23	97	34	159	256
11:00			69		94			23:00			24		24		
11:15			56		89			23:15			15		31		
11:30			49		87			23:30			25		28		
11:45			64	238	79	349	587	23:45			17	81	23	106	187
Total Vol.				1394		2448	**3842**					2632		4296	**6928**

	AM			PM		
Split %	36.3%	63.7%	**35.7%**	38.0%	62.0%	**64.3%**
Peak Hour	11:45	07:45	**07:45**	12:15	16:45	**16:45**
Volume	273	403	**651**	295	612	**878**
P.H.F.	0.92	0.84	**0.87**	0.88	0.92	**0.94**

Daily Totals

NB	SB	EB	WB	Combined
		4026	6744	**10770**

PACIFIC TECHNICAL DATA

WEDNESDAY, JUNE 12TH, 2013 CITY: MISSION VALLEY PROJECT: PTD13-0614-01

RIO SAN DIEGO BTN QUALCOMM & RIO BONITA

AM Period	NB	SB	EB		WB			PM Period	NB	SB	EB		WB		
00:00			16		13			12:00			174		194		
00:15			7		8			12:15			182		228		
00:30			9		11			12:30			178		209		
00:45			14	46	6	38	84	12:45			191	725	193	824	1549
01:00			8		3			13:00			204		204		
01:15			8		6			13:15			191		182		
01:30			6		7			13:30			186		178		
01:45			7	29	7	23	52	13:45			175	756	179	743	1499
02:00			2		5			14:00			184		175		
02:15			6		2			14:15			162		155		
02:30			7		6			14:30			136		164		
02:45			5	20	3	16	36	14:45			117	599	187	681	1280
03:00			1		2			15:00			146		164		
03:15			2		0			15:15			134		182		
03:30			4		4			15:30			117		184		
03:45			2	9	5	11	20	15:45			145	542	273	803	1345
04:00			6		6			16:00			158		201		
04:15			3		5			16:15			129		258		
04:30			14		6			16:30			129		170		
04:45			12	35	7	24	59	16:45			127	543	280	909	1452
05:00			22		8			17:00			135		212		
05:15			9		13			17:15			130		312		
05:30			7		11			17:30			130		250		
05:45			23	61	16	48	109	17:45			129	524	207	981	1505
06:00			71		29			18:00			132		163		
06:15			84		22			18:15			121		181		
06:30			74		37			18:30			140		147		
06:45			91	320	36	124	444	18:45			129	522	114	605	1127
07:00			160		46			19:00			190		128		
07:15			169		57			19:15			125		124		
07:30			178		61			19:30			102		94		
07:45			173	680	62	226	906	19:45			97	514	113	459	973
08:00			203		73			20:00			85		99		
08:15			180		65			20:15			109		88		
08:30			172		87			20:30			63		78		
08:45			168	723	82	307	1030	20:45			79	336	69	334	670
09:00			179		84			21:00			48		60		
09:15			116		87			21:15			40		53		
09:30			121		82			21:30			51		68		
09:45			161	577	92	345	922	21:45			38	177	35	216	393
10:00			160		123			22:00			35		34		
10:15			151		98			22:15			49		49		
10:30			137		106			22:30			74		99		
10:45			130	578	123	450	1028	22:45			58	216	69	251	467
11:00			120		138			23:00			37		38		
11:15			133		138			23:15			22		47		
11:30			139		169			23:30			30		29		
11:45			164	556	237	682	1238	23:45			8	97	21	135	232
Total Vol.				3634		2294	**5928**					5551		6941	**12492**

	AM			PM		
Split %	61.3%	38.7%	**32.2%**	44.4%	55.6%	**67.8%**
Peak Hour	07:30	11:45	**11:45**	12:45	16:45	**12:15**
Volume	734	868	**1566**	772	1054	**1589**
P.H.F.	0.90	0.92	**0.95**	0.95	0.84	**0.97**

Daily Totals

NB	SB	EB	WB	Combined
		9185	9235	**18420**

PACIFIC TECHNICAL DATA

WEDNESDAY, JUNE 12TH, 2013 CITY: MISSION VALLEY PROJECT: PTD13-0614-01

RIO BONITA BTN FRIARS & RIO SAN DIEGO

AM Period	NB		SB		EB		WB			PM Period	NB		SB		EB		WB		
00:00	3		0							12:00	15		18						
00:15	0		1							12:15	24		24						
00:30	0		0							12:30	10		19						
00:45	1	4	1	2					6	12:45	15	64	21	82					146
01:00	0		0							13:00	10		26						
01:15	1		2							13:15	8		34						
01:30	0		1							13:30	17		37						
01:45	0	1	0	3					4	13:45	15	50	18	115					165
02:00	0		1							14:00	11		23						
02:15	0		1							14:15	10		11						
02:30	0		0							14:30	8		24						
02:45	0	0	1	3					3	14:45	13	42	14	72					114
03:00	1		1							15:00	11		11						
03:15	0		0							15:15	22		13						
03:30	1		0							15:30	19		22						
03:45	0	2	0	1					3	15:45	28	80	19	65					145
04:00	0		0							16:00	18		23						
04:15	2		1							16:15	15		18						
04:30	1		0							16:30	28		44						
04:45	1	4	0	1					5	16:45	15	76	32	117					193
05:00	0		1							17:00	22		56						
05:15	2		0							17:15	12		28						
05:30	1		0							17:30	16		33						
05:45	2	5	3	4					9	17:45	17	67	28	145					212
06:00	3		7							18:00	15		19						
06:15	2		9							18:15	23		20						
06:30	4		11							18:30	11		16						
06:45	5	14	12	39					53	18:45	6	55	11	66					121
07:00	9		22							19:00	12		15						
07:15	18		18							19:15	8		9						
07:30	10		20							19:30	8		12						
07:45	12	49	22	82					131	19:45	6	34	8	44					78
08:00	8		20							20:00	6		8						
08:15	20		27							20:15	6		8						
08:30	15		15							20:30	3		7						
08:45	4	47	19	81					128	20:45	2	17	1	24					41
09:00	9		31							21:00	4		1						
09:15	4		29							21:15	0		6						
09:30	4		21							21:30	1		7						
09:45	13	30	17	98					128	21:45	3	8	5	19					27
10:00	7		20							22:00	1		4						
10:15	7		27							22:15	1		5						
10:30	11		15							22:30	4		3						
10:45	11	36	14	76					112	22:45	5	11	10	22					33
11:00	13		22							23:00	2		1						
11:15	19		22							23:15	2		2						
11:30	11		19							23:30	1		3						
11:45	11	54	16	79					133	23:45	1	6	2	8					14
Total Vol.		246		469					**715**			510		779					**1289**

Daily Totals	NB	SB	EB	WB	Combined
	756	1248			**2004**

	AM			PM		
Split %	34.4%	65.6%	**35.7%**	39.6%	60.4%	**64.3%**
Peak Hour	11:30	08:45	**08:15**	15:45	16:30	**16:30**
Volume	61	100	**140**	89	160	**237**
P.H.F.	0.64	0.81	**0.74**	0.68	0.71	**0.76**

PACIFIC TECHNICAL DATA

TUESDAY, JUNE 25TH, 2013 CITY: MISSION VALLEY PROJECT: PTD13-0614-01

MISSION VALLEY E-O MISSION CENTER

AM Period	NB		SB		EB		WB			PM Period	NB		SB		EB		WB		
00:00					0		0			12:00					9		9		
00:15					3		1			12:15					12		8		
00:30					2		0			12:30					19		16		
00:45					1	6	0	1	7	12:45					17	57	18	51	108
01:00					0		1			13:00					10		12		
01:15					0		1			13:15					18		9		
01:30					0		1			13:30					12		11		
01:45					2	2	1	4	6	13:45					5	45	12	44	89
02:00					0		0			14:00					12		18		
02:15					0		0			14:15					11		20		
02:30					2		0			14:30					20		18		
02:45					0	2	0	0	2	14:45					15	58	18	74	132
03:00					0		0			15:00					8		22		
03:15					0		0			15:15					10		22		
03:30					1		0			15:30					10		21		
03:45					0	1	1	1	2	15:45					5	33	25	90	123
04:00					0		0			16:00					7		16		
04:15					0		0			16:15					10		22		
04:30					0		0			16:30					15		15		
04:45					0	0	2	2	2	16:45					18	50	18	71	121
05:00					0		0			17:00					10		15		
05:15					2		3			17:15					12		17		
05:30					1		3			17:30					16		17		
05:45					0	3	2	8	11	17:45					15	53	10	59	112
06:00					3		5			18:00					11		11		
06:15					6		1			18:15					11		7		
06:30					13		9			18:30					9		8		
06:45					10	32	8	23	55	18:45					8	39	8	34	73
07:00					9		12			19:00					11		10		
07:15					15		15			19:15					8		9		
07:30					11		22			19:30					12		4		
07:45					12	47	33	82	129	19:45					9	40	7	30	70
08:00					7		12			20:00					10		7		
08:15					8		18			20:15					7		10		
08:30					9		17			20:30					7		9		
08:45					10	34	17	64	98	20:45					8	32	4	30	62
09:00					9		9			21:00					6		6		
09:15					12		11			21:15					5		7		
09:30					8		9			21:30					6		3		
09:45					11	40	15	44	84	21:45					9	26	7	23	49
10:00					11		14			22:00					1		2		
10:15					15		10			22:15					2		4		
10:30					10		9			22:30					0		5		
10:45					13	49	12	45	94	22:45					4	7	3	14	21
11:00					9		12			23:00					3		5		
11:15					19		15			23:15					6		4		
11:30					11		11			23:30					1		3		
11:45					13	52	13	51	103	23:45					6	16	0	12	28
Total Vol.						268		325	**593**							456		532	**988**

Daily Totals	NB	SB	EB	WB	Combined
			724	857	**1581**

	AM			PM		
Split %	45.2%	54.8%	**37.5%**	46.2%	53.8%	**62.5%**
Peak Hour	11:45	07:30	**07:00**	12:30	15:00	**14:30**
Volume	53	85	**129**	64	90	**133**
P.H.F.	0.70	0.64	**0.72**	0.84	0.90	**0.88**

PACIFIC TECHNICAL DATA

2011 vs 2013 Segmental Counts Sample Calculations

Segment	2011 ADT	2013 ADT	% Difference
Friars Road			
Mission Center Road to Qualcomm Way	33219	34057	2.52%
Qualcomm Way to Fenton Parkway	34886	25698	-26.34%
Mission Center Road			
Mission Valley Road to Murray Ridge Road	9208	9035	-1.88%
Murray Ridge Road			
I-805 SB Ramp to Mission Center Road	17441	10770	-38.25%
Mission Center Road to Sandrock Road	14074	9502	-32.49%

APPENDIX E

PEAK HOUR INTERSECTION AND ARTERIAL ANALYSIS WORKSHEETS
EXISTING CONDITIONS

Existing Conditions AM
4: Friars Rd EB Ramps & Mission Center Rd 1/15/2015

Movement	EBL	EBT	EBR	WBL	WBT	WBR	NBL	NBT	NBR	SBL	SBT	SBR
Lane Configurations												
Ideal Flow (vphpl)	1900	1900	1900	1900	1900	1900	1900	1900	1900	1900	1900	1900
Lane Width	14	12	13	12	12	12	12	13	12	15	16	12
Total Lost time (s)	4.0	4.0	4.0					4.0		4.0	4.0	
Lane Util. Factor	0.95	0.95	1.00					0.95		0.97	0.95	
Frpb, ped/bikes	1.00	1.00	1.00					1.00		1.00	1.00	
Flpb, ped/bikes	1.00	1.00	1.00					1.00		1.00	1.00	
Frt	1.00	1.00	0.85					0.99		1.00	1.00	
Flt Protected	0.95	0.95	1.00					1.00		0.95	1.00	
Satd. Flow (prot)	1793	1686	1636					3622		3776	4011	
Flt Permitted	0.95	0.95	1.00					1.00		0.95	1.00	
Satd. Flow (perm)	1793	1686	1636					3622		3776	4011	
Volume (vph)	165	1	173	0	0	0	0	428	29	99	311	0
Peak-hour factor, PHF	0.95	0.95	0.95	0.95	0.95	0.95	0.95	0.95	0.95	0.95	0.95	0.95
Adj. Flow (vph)	174	1	182	0	0	0	0	451	31	104	327	0
RTOR Reduction (vph)	0	0	144	0	0	0	0	6	0	0	0	0
Lane Group Flow (vph)	88	87	38	0	0	0	0	476	0	104	327	0
Confl. Peds. (#/hr)												
Turn Type	Split		Perm							Prot		
Protected Phases	4	4						2		1	6	
Permitted Phases			4									
Actuated Green, G (s)	5.8	5.8	5.8					8.4		3.3	15.5	
Effective Green, g (s)	6.7	6.7	6.7					9.4		3.7	17.1	
Actuated g/C Ratio	0.21	0.21	0.21					0.30		0.12	0.54	
Clearance Time (s)	4.9	4.9	4.9					5.0		4.4	5.6	
Vehicle Extension (s)	3.0	3.0	3.0					3.0		3.0	3.0	
Lane Grp Cap (vph)	378	355	345					1071		439	2157	
v/s Ratio Prot	0.05	c0.05						c0.13		c0.03	0.08	
v/s Ratio Perm			0.02									
v/c Ratio	0.23	0.25	0.11					0.44		0.24	0.15	
Uniform Delay, d1	10.4	10.4	10.1					9.1		12.8	3.7	
Progression Factor	1.00	1.00	1.00					1.00		1.00	1.00	
Incremental Delay, d2	0.3	0.4	0.1					0.3		0.3	0.0	
Delay (s)	10.7	10.8	10.3					9.4		13.0	3.7	
Level of Service	B	B	B					A		B	A	
Approach Delay (s)		10.5			0.0			9.4			6.0	
Approach LOS		B			A			A			A	

Intersection Summary				
HCM Average Control Delay	8.5	HCM Level of Service	A	
HCM Volume to Capacity ratio	0.34			
Actuated Cycle Length (s)	31.8	Sum of lost time (s)	12.0	
Intersection Capacity Utilization	34.1%	ICU Level of Service	A	
Analysis Period (min)	15			
c Critical Lane Group				

Existing Conditions AM
5: Friars Rd WB Ramps & Mission Center Rd 1/15/2015

Movement	EBL	EBT	EBR	WBL	WBT	WBR	NBL	NBT	NBR	SBL	SBT	SBR
Lane Configurations												
Ideal Flow (vphpl)	1900	1900	1900	1900	1900	1900	1900	1900	1900	1900	1900	1900
Lane Width	12	12	12	15	12	15	10	12	12	12	14	11
Total Lost time (s)				4.0	4.0	4.0	4.0	4.0			4.0	4.0
Lane Util. Factor				0.95	0.95	1.00	0.97	0.95			0.95	1.00
Frpb, ped/bikes				1.00	1.00	1.00	1.00	1.00			1.00	1.00
Flpb, ped/bikes				1.00	1.00	1.00	1.00	1.00			1.00	1.00
Frt				1.00	1.00	0.85	1.00	1.00			1.00	0.85
Flt Protected				0.95	0.95	1.00	0.95	1.00			1.00	1.00
Satd. Flow (prot)				1849	1681	1742	3204	3539			3775	1531
Flt Permitted				0.95	0.95	1.00	0.95	1.00			1.00	1.00
Satd. Flow (perm)				1849	1681	1742	3204	3539			3775	1531
Volume (vph)	0	0	0	138	0	260	143	411	0	0	267	140
Peak-hour factor, PHF	0.95	0.95	0.95	0.95	0.95	0.95	0.95	0.95	0.95	0.95	0.95	0.95
Adj. Flow (vph)	0	0	0	145	0	274	151	433	0	0	281	147
RTOR Reduction (vph)	0	0	0	0	0	208	0	0	0	0	0	111
Lane Group Flow (vph)	0	0	0	74	71	66	151	433	0	0	281	36
Confl. Peds. (#/hr)												
Turn Type				Split		Perm	Prot					Perm
Protected Phases				8	8		5	2			6	
Permitted Phases						8						6
Actuated Green, G (s)				7.5	7.5	7.5	5.6	17.7			6.7	6.7
Effective Green, g (s)				8.4	8.4	8.4	6.0	18.7			8.7	8.7
Actuated g/C Ratio				0.24	0.24	0.24	0.17	0.53			0.25	0.25
Clearance Time (s)				4.9	4.9	4.9	4.4	5.0			6.0	6.0
Vehicle Extension (s)				3.0	3.0	3.0	3.0	3.0			3.0	3.0
Lane Grp Cap (vph)				442	402	417	548	1885			936	379
v/s Ratio Prot				0.04	c0.04		0.05	c0.12			c0.07	
v/s Ratio Perm						0.04						0.02
v/c Ratio				0.17	0.18	0.16	0.28	0.23			0.30	0.10
Uniform Delay, d1				10.6	10.6	10.6	12.7	4.4			10.7	10.2
Progression Factor				1.00	1.00	1.00	1.00	1.00			1.00	1.00
Incremental Delay, d2				0.2	0.2	0.2	0.3	0.1			0.2	0.1
Delay (s)				10.8	10.8	10.7	12.9	4.4			10.9	10.3
Level of Service				B	B	B	B	A			B	B
Approach Delay (s)		0.0			10.7			6.6			10.7	
Approach LOS		A			B			A			B	

Intersection Summary				
HCM Average Control Delay	9.1	HCM Level of Service	A	
HCM Volume to Capacity ratio	0.25			
Actuated Cycle Length (s)	35.1	Sum of lost time (s)	12.0	
Intersection Capacity Utilization	34.1%	ICU Level of Service	A	
Analysis Period (min)	15			
c Critical Lane Group				

Existing Conditions AM
7: Friars Rd EB Ramps & Qualcomm Wy 1/15/2015

Movement	EBL	EBT	EBR	WBL	WBT	WBR	NBL	NBT	NBR	SBL	SBT	SBR
Lane Configurations												
Ideal Flow (vphpl)	1900	1900	1900	1900	1900	1900	1900	1900	1900	1900	1900	1900
Lane Width	12	11	14	12	12	12	12	12	15	12	12	12
Total Lost time (s)		4.0	4.0					4.0	4.0	4.0	4.0	
Lane Util. Factor		1.00	1.00					0.95	1.00	1.00	0.95	
Frpb, ped/bikes		1.00	1.00					1.00	1.00	1.00	1.00	
Flpb, ped/bikes		1.00	1.00					1.00	1.00	1.00	1.00	
Frt		1.00	0.85					1.00	0.85	1.00	1.00	
Flt Protected		0.95	1.00					1.00	1.00	0.95	1.00	
Satd. Flow (prot)		1711	1689					3539	1742	1770	3539	
Flt Permitted		0.95	1.00					1.00	1.00	0.95	1.00	
Satd. Flow (perm)		1711	1689					3539	1742	1770	3539	
Volume (vph)	50	0	120	0	0	0	0	257	180	10	188	0
Peak-hour factor, PHF	0.95	0.95	0.95	0.95	0.95	0.95	0.95	0.95	0.95	0.95	0.95	0.95
Adj. Flow (vph)	53	0	126	0	0	0	0	271	189	11	198	0
RTOR Reduction (vph)	0	0	109	0	0	0	0	0	55	0	0	0
Lane Group Flow (vph)	0	53	17	0	0	0	0	271	134	11	198	0
Confl. Peds. (#/hr)												
Turn Type	Split		Perm						Perm	Prot		
Protected Phases	4	4						2		1	6	
Permitted Phases			4						2			
Actuated Green, G (s)		11.4	11.4					62.8	62.8	1.4	68.8	
Effective Green, g (s)		12.3	12.3					63.9	63.9	1.8	69.7	
Actuated g/C Ratio		0.14	0.14					0.71	0.71	0.02	0.77	
Clearance Time (s)		4.9	4.9					5.1	5.1	4.4	4.9	
Vehicle Extension (s)		3.0	3.0					3.0	3.0	3.0	3.0	
Lane Grp Cap (vph)		234	231					2513	1237	35	2741	
v/s Ratio Prot		c0.03						0.08		c0.01	0.06	
v/s Ratio Perm			0.01						c0.08			
v/c Ratio		0.23	0.07					0.11	0.11	0.31	0.07	
Uniform Delay, d1		34.6	33.9					4.1	4.1	43.5	2.4	
Progression Factor		1.00	1.00					1.00	1.00	1.04	1.06	
Incremental Delay, d2		0.5	0.1					0.1	0.2	4.9	0.0	
Delay (s)		35.1	34.0					4.2	4.3	50.3	2.6	
Level of Service		D	C					A	A	D	A	
Approach Delay (s)		34.3			0.0			4.2			5.1	
Approach LOS		C			A			A			A	

Intersection Summary				
HCM Average Control Delay	10.8	HCM Level of Service	B	
HCM Volume to Capacity ratio	0.13			
Actuated Cycle Length (s)	90.0	Sum of lost time (s)	12.0	
Intersection Capacity Utilization	33.6%	ICU Level of Service	A	
Analysis Period (min)	15			
c Critical Lane Group				

Existing Conditions AM
8: Friars Rd WB Ramps & Qualcomm Wy 1/15/2015

Movement	EBL	EBT	EBR	WBL	WBT	WBR	NBL	NBT	NBR	SBL	SBT	SBR
Lane Configurations												
Ideal Flow (vphpl)	1900	1900	1900	1900	1900	1900	1900	1900	1900	1900	1900	1900
Lane Width	12	12	12	12	16	12	12	11	12	12	16	16
Total Lost time (s)				4.0	4.0		4.0	4.0			4.0	
Lane Util. Factor				0.95	0.95		1.00	1.00			0.95	
Frpb, ped/bikes				1.00	1.00		1.00	1.00			1.00	
Flpb, ped/bikes				1.00	1.00		1.00	1.00			1.00	
Frt				1.00	0.99		1.00	1.00			0.97	
Flt Protected				0.95	0.95		0.95	1.00			1.00	
Satd. Flow (prot)				1681	1900		1770	1801			3877	
Flt Permitted				0.95	0.95		0.95	1.00			1.00	
Satd. Flow (perm)				1681	1900		1770	1801			3877	
Volume (vph)	0	0	0	170	0	5	298	17	0	0	27	8
Peak-hour factor, PHF	0.95	0.95	0.95	0.95	0.95	0.95	0.95	0.95	0.95	0.95	0.95	0.95
Adj. Flow (vph)	0	0	0	179	0	5	314	18	0	0	28	8
RTOR Reduction (vph)	0	0	0	0	3	0	0	0	0	0	7	0
Lane Group Flow (vph)	0	0	0	91	90	0	314	18	0	0	29	0
Confl. Peds. (#/hr)												
Turn Type				Split			Prot					
Protected Phases				8	8		5	2			6	
Permitted Phases												
Actuated Green, G (s)				11.4	11.4		53.3	68.6			10.6	
Effective Green, g (s)				12.3	12.3		54.2	69.7			11.5	
Actuated g/C Ratio				0.14	0.14		0.60	0.77			0.13	
Clearance Time (s)				4.9	4.9		4.9	5.1			4.9	
Vehicle Extension (s)				3.0	3.0		3.0	3.0			3.0	
Lane Grp Cap (vph)				230	260		1066	1395			495	
v/s Ratio Prot				c0.05	0.05		c0.18	0.01			c0.01	
v/s Ratio Perm												
v/c Ratio				0.40	0.35		0.29	0.01			0.06	
Uniform Delay, d1				35.5	35.2		8.7	2.3			34.5	
Progression Factor				1.00	1.00		0.86	0.39			1.00	
Incremental Delay, d2				1.1	0.8		0.7	0.0			0.0	
Delay (s)				36.6	36.0		8.1	0.9			34.5	
Level of Service				D	D		A	A			C	
Approach Delay (s)		0.0			36.3			7.7			34.5	
Approach LOS		A			D			A			C	

Intersection Summary				
HCM Average Control Delay	19.0	HCM Level of Service	B	
HCM Volume to Capacity ratio	0.28			
Actuated Cycle Length (s)	90.0	Sum of lost time (s)	12.0	
Intersection Capacity Utilization	33.6%	ICU Level of Service	A	
Analysis Period (min)	15			
c Critical Lane Group				

Existing Conditions AM
10: Friars Rd & River Rd 1/15/2015

Movement	EBL	EBT	EBR	WBL	WBT	WBR	NBL	NBT	NBR	SBL	SBT	SBR
Lane Configurations												
Ideal Flow (vphpl)	1900	1900	1900	1900	1900	1900	1900	1900	1900	1900	1900	1900
Lane Width	14	12	12	10	12	12	12	11	13	12	15	10
Total Lost time (s)	4.0	4.0		4.0	4.0			4.0	4.0		4.0	
Lane Util. Factor	1.00	0.91		1.00	0.91			1.00	1.00		1.00	
Frt	1.00	0.99		1.00	0.98			1.00	0.85		0.96	
Flt Protected	0.95	1.00		0.95	1.00			0.96	1.00		0.97	
Satd. Flow (prot)	1888	5059		1652	4990			1737	1636		1911	
Flt Permitted	0.95	1.00		0.95	1.00			0.77	1.00		0.78	
Satd. Flow (perm)	1888	5059		1652	4990			1387	1636		1539	
Volume (vph)	85	510	18	131	1166	167	68	25	42	12	2	6
Peak-hour factor, PHF	0.95	0.95	0.95	0.95	0.95	0.95	0.95	0.95	0.95	0.95	0.95	0.95
Adj. Flow (vph)	89	537	19	138	1227	176	72	26	44	13	2	6
RTOR Reduction (vph)	0	2	0	0	13	0	0	0	38	0	5	0
Lane Group Flow (vph)	89	554	0	138	1390	0	0	98	6	0	16	0
Turn Type	Prot			Prot			Perm		Perm	Perm		
Protected Phases	5	2		1	6			8			4	
Permitted Phases							8		8	4		
Actuated Green, G (s)	4.4	24.5		5.7	25.8			6.5	6.5		6.5	
Effective Green, g (s)	4.8	26.7		6.1	28.0			7.4	7.4		7.4	
Actuated g/C Ratio	0.09	0.51		0.12	0.54			0.14	0.14		0.14	
Clearance Time (s)	4.4	6.2		4.4	6.2			4.9	4.9		4.9	
Vehicle Extension (s)	3.0	3.0		3.0	3.0			3.0	3.0		3.0	
Lane Grp Cap (vph)	174	2588		193	2677			197	232		218	
v/s Ratio Prot	0.05	0.11		c0.08	c0.28							
v/s Ratio Perm								c0.07	0.00		0.01	
v/c Ratio	0.51	0.21		0.72	0.52			0.50	0.03		0.07	
Uniform Delay, d1	22.6	7.0		22.2	7.8			20.7	19.3		19.4	
Progression Factor	1.00	1.00		1.00	1.00			1.00	1.00		1.00	
Incremental Delay, d2	2.5	0.0		11.9	0.2			2.0	0.0		0.1	
Delay (s)	25.1	7.0		34.1	7.9			22.7	19.3		19.6	
Level of Service	C	A		C	A			C	B		B	
Approach Delay (s)		9.5			10.3			21.6			19.6	
Approach LOS		A			B			C			B	

Intersection Summary				
HCM Average Control Delay	10.8	HCM Level of Service	B	
HCM Volume to Capacity ratio	0.51			
Actuated Cycle Length (s)	52.2	Sum of lost time (s)	8.0	
Intersection Capacity Utilization	48.8%	ICU Level of Service	A	
Analysis Period (min)	15			

c Critical Lane Group

Existing Conditions AM
11: Friars Rd & Fenton Pkwy 1/15/2015

Movement	EBL	EBT	EBR	WBL	WBT	WBR	NBL	NBT	NBR	SBL	SBT	SBR
Lane Configurations												
Ideal Flow (vphpl)	1900	1900	1900	1900	1900	1900	1900	1900	1900	1900	1900	1900
Lane Width	12	12	14	10	12	12	9	12	16	12	12	12
Total Lost time (s)	4.0	4.0	4.0	4.0	4.0	4.0	4.0	4.0	4.0	4.0	4.0	4.0
Lane Util. Factor	1.00	0.91	1.00	0.97	0.91	1.00	0.97	1.00	1.00	0.97	0.95	0.95
Frpb, ped/bikes	1.00	1.00	1.00	1.00	1.00	1.00	1.00	1.00	1.00	1.00	1.00	1.00
Flpb, ped/bikes	1.00	1.00	1.00	1.00	1.00	1.00	1.00	1.00	1.00	1.00	1.00	1.00
Frt	1.00	1.00	0.85	1.00	1.00	0.85	1.00	1.00	0.85	1.00	0.89	0.85
Flt Protected	0.95	1.00	1.00	0.95	1.00	1.00	0.95	1.00	1.00	0.95	1.00	1.00
Satd. Flow (prot)	1770	5085	1689	3204	5085	1583	3090	1863	1794	3433	1583	1504
Flt Permitted	0.95	1.00	1.00	0.95	1.00	1.00	0.95	1.00	1.00	0.95	1.00	1.00
Satd. Flow (perm)	1770	5085	1689	3204	5085	1583	3090	1863	1794	3433	1583	1504
Volume (vph)	24	508	29	165	1205	18	72	5	101	92	25	144
Peak-hour factor, PHF	0.95	0.95	0.95	0.95	0.95	0.95	0.95	0.95	0.95	0.95	0.95	0.95
Adj. Flow (vph)	25	535	31	174	1268	19	76	5	106	97	26	152
RTOR Reduction (vph)	0	0	11	0	0	6	0	0	94	0	54	29
Lane Group Flow (vph)	25	535	20	174	1268	13	76	5	12	97	34	61
Confl. Peds. (#/hr)												
Turn Type	Prot		pm+ov	Prot		pm+ov	Prot		Perm	Prot		pm+ov
Protected Phases	5	2	3	1	6	7	3	8		7	4	5
Permitted Phases			2			6			8			4
Actuated Green, G (s)	5.3	65.5	70.3	10.7	70.9	77.5	4.8	12.3	12.3	6.6	14.1	19.4
Effective Green, g (s)	5.7	67.7	72.9	11.1	73.1	80.1	5.2	13.2	13.2	7.0	15.0	20.7
Actuated g/C Ratio	0.05	0.59	0.63	0.10	0.64	0.70	0.05	0.11	0.11	0.06	0.13	0.18
Clearance Time (s)	4.4	6.2	4.4	4.4	6.2	4.4	4.4	4.9	4.9	4.4	4.9	4.4
Vehicle Extension (s)	3.0	3.0	3.0	3.0	3.0	3.0	3.0	3.0	3.0	3.0	3.0	3.0
Lane Grp Cap (vph)	88	2994	1129	309	3232	1158	140	214	206	209	206	323
v/s Ratio Prot	0.01	0.11	0.00	c0.05	c0.25	0.00	0.02	0.00		c0.03	0.02	c0.01
v/s Ratio Perm			0.01			0.01			0.01			0.03
v/c Ratio	0.28	0.18	0.02	0.56	0.39	0.01	0.54	0.02	0.06	0.46	0.17	0.19
Uniform Delay, d1	52.7	10.9	7.8	49.6	10.2	5.3	53.7	45.2	45.4	52.2	44.4	40.0
Progression Factor	1.00	1.00	1.00	1.00	1.00	1.00	1.00	1.00	1.00	1.00	1.00	1.00
Incremental Delay, d2	1.8	0.1	0.0	2.3	0.4	0.0	4.2	0.0	0.1	1.6	0.4	0.3
Delay (s)	54.5	11.0	7.8	52.0	10.5	5.3	58.0	45.2	45.5	53.8	44.8	40.3
Level of Service	D	B	A	D	B	A	E	D	D	D	D	D
Approach Delay (s)		12.7			15.4			50.6			46.5	
Approach LOS		B			B			D			D	

Intersection Summary				
HCM Average Control Delay	20.8	HCM Level of Service	C	
HCM Volume to Capacity ratio	0.37			
Actuated Cycle Length (s)	115.0	Sum of lost time (s)	8.0	
Intersection Capacity Utilization	45.9%	ICU Level of Service	A	
Analysis Period (min)	15			

c Critical Lane Group

Existing Conditions AM
12: Friars Rd & Northside Dr 1/15/2015

Movement	EBL	EBT	EBR	WBL	WBT	WBR	NBL	NBT	NBR	SBL	SBT	SBR
Lane Configurations												
Ideal Flow (vphpl)	1900	1900	1900	1900	1900	1900	1900	1900	1900	1900	1900	1900
Lane Width	10	12	16	10	13	12	11	16	12	11	15	12
Total Lost time (s)	4.0	4.0	4.0	4.0	4.0	4.0	4.0	4.0	4.0	4.0	4.0	4.0
Lane Util. Factor	0.97	0.91	1.00	0.97	0.91	1.00	0.97	1.00	1.00	0.97	1.00	1.00
Frpb, ped/bikes	1.00	1.00	1.00	1.00	1.00	1.00	1.00	1.00	1.00	1.00	1.00	1.00
Flpb, ped/bikes	1.00	1.00	1.00	1.00	1.00	1.00	1.00	1.00	1.00	1.00	1.00	1.00
Frt	1.00	1.00	0.85	1.00	1.00	0.85	1.00	1.00	0.85	1.00	1.00	0.85
Flt Protected	0.95	1.00	1.00	0.95	1.00	1.00	0.95	1.00	1.00	0.95	1.00	1.00
Satd. Flow (prot)	3204	5085	1794	3204	5255	1583	3319	2111	1583	3319	2049	1583
Flt Permitted	0.95	1.00	1.00	0.95	1.00	1.00	0.95	1.00	1.00	0.95	1.00	1.00
Satd. Flow (perm)	3204	5085	1794	3204	5255	1583	3319	2111	1583	3319	2049	1583
Volume (vph)	29	518	180	419	1162	32	78	6	174	152	30	100
Peak-hour factor, PHF	0.95	0.95	0.95	0.95	0.95	0.95	0.95	0.95	0.95	0.95	0.95	0.95
Adj. Flow (vph)	31	545	189	441	1223	34	82	6	183	160	32	105
RTOR Reduction (vph)	0	0	130	0	0	12	0	0	49	0	0	87
Lane Group Flow (vph)	31	545	59	441	1223	22	82	6	134	160	32	18
Confl. Peds. (#/hr)												
Turn Type	Prot		Perm	Prot		pm+ov	Prot		pm+ov	Prot		Perm
Protected Phases	5	2		1	6	7	3	8	1	7	4	
Permitted Phases			2			6			8			4
Actuated Green, G (s)	2.0	18.6	18.6	14.4	30.8	40.7	3.2	3.9	18.3	9.9	10.6	10.6
Effective Green, g (s)	2.4	20.6	20.6	14.8	33.0	43.3	3.6	4.8	19.6	10.3	11.5	11.5
Actuated g/C Ratio	0.04	0.31	0.31	0.22	0.50	0.65	0.05	0.07	0.29	0.15	0.17	0.17
Clearance Time (s)	4.4	6.0	6.0	4.4	6.2	4.4	4.4	4.9	4.4	4.4	4.9	4.9
Vehicle Extension (s)	3.0	3.0	3.0	3.0	3.0	3.0	3.0	3.0	3.0	3.0	3.0	3.0
Lane Grp Cap (vph)	116	1575	556	713	2608	1126	180	152	562	514	354	274
v/s Ratio Prot	0.01	0.11		c0.14	c0.23	0.00	c0.02	0.00	c0.05	c0.05	0.02	
v/s Ratio Perm			0.03			0.01			0.03			0.01
v/c Ratio	0.27	0.35	0.11	0.62	0.47	0.02	0.46	0.04	0.24	0.31	0.09	0.07
Uniform Delay, d1	31.2	17.7	16.4	23.3	11.0	4.1	30.5	28.7	17.8	25.0	23.1	23.0
Progression Factor	1.00	1.00	1.00	1.00	1.00	1.00	1.00	1.00	1.00	1.00	1.00	1.00
Incremental Delay, d2	1.2	0.1	0.1	1.6	0.1	0.0	1.8	0.1	0.2	0.3	0.1	0.1
Delay (s)	32.4	17.9	16.5	24.9	11.1	4.1	32.3	28.8	18.0	25.3	23.2	23.1
Level of Service	C	B	B	C	B	A	C	C	B	C	C	C
Approach Delay (s)		18.1			14.6			22.6			24.3	
Approach LOS		B			B			C			C	

Intersection Summary				
HCM Average Control Delay	17.1	HCM Level of Service	B	
HCM Volume to Capacity ratio	0.45			
Actuated Cycle Length (s)	66.5	Sum of lost time (s)	12.0	
Intersection Capacity Utilization	46.8%	ICU Level of Service	A	
Analysis Period (min)	15			

c Critical Lane Group

Existing Conditions AM
17: Mission Ctr Rd & Murray Ridge Rd 1/15/2015

Movement	EBL	EBT	EBR	WBL	WBT	WBR	NBL	NBT	NBR	SBL	SBT	SBR
Lane Configurations												
Ideal Flow (vphpl)	1900	1900	1900	1900	1900	1900	1900	1900	1900	1900	1900	1900
Lane Width	12	10	12	12	16	12	12	16	12	12	16	12
Total Lost time (s)		4.0	4.0		4.0		4.0	4.0		4.0	4.0	4.0
Lane Util. Factor		1.00	1.00		1.00		1.00	1.00		1.00	1.00	1.00
Frpb, ped/bikes		1.00	1.00		1.00		1.00	1.00		1.00	1.00	1.00
Flpb, ped/bikes		1.00	1.00		1.00		1.00	1.00		1.00	1.00	1.00
Frt		1.00	0.85		0.99		1.00	0.98		1.00	1.00	0.85
Flt Protected		0.97	1.00		0.96		0.95	1.00		0.95	1.00	1.00
Satd. Flow (prot)		1680	1583		2020		1770	2070		1770	2111	1583
Flt Permitted		0.97	1.00		0.96		0.95	1.00		0.95	1.00	1.00
Satd. Flow (perm)		1680	1583		2020		1770	2070		1770	2111	1583
Volume (vph)	71	30	59	142	33	9	316	341	50	4	418	120
Peak-hour factor, PHF	0.95	0.95	0.95	0.95	0.95	0.95	0.95	0.95	0.95	0.95	0.95	0.95
Adj. Flow (vph)	75	32	62	149	35	9	333	359	53	4	440	126
RTOR Reduction (vph)	0	0	54	0	2	0	0	4	0	0	0	35
Lane Group Flow (vph)	0	107	8	0	191	0	333	408	0	4	440	91
Confl. Peds. (#/hr)												
Turn Type	Split		Perm	Split			Prot			Prot		Perm
Protected Phases	4	4		3	3		5	2		1	6	
Permitted Phases			4									6
Actuated Green, G (s)		10.2	10.2		12.4		19.1	43.8		0.6	25.3	25.3
Effective Green, g (s)		11.5	11.5		13.3		19.5	44.7		1.0	26.2	26.2
Actuated g/C Ratio		0.13	0.13		0.15		0.23	0.52		0.01	0.30	0.30
Clearance Time (s)		5.3	5.3		4.9		4.4	4.9		4.4	4.9	4.9
Vehicle Extension (s)		3.5	3.5		2.0		2.0	3.9		2.0	3.9	3.9
Lane Grp Cap (vph)		223	210		311		399	1070		20	639	479
v/s Ratio Prot		c0.06			c0.09		c0.19	0.20		0.00	c0.21	
v/s Ratio Perm			0.01									0.06
v/c Ratio		0.48	0.04		0.62		0.83	0.38		0.20	0.69	0.19
Uniform Delay, d1		34.7	32.7		34.2		32.0	12.6		42.4	26.6	22.3
Progression Factor		1.00	1.00		1.00		1.00	1.00		1.00	1.00	1.00
Incremental Delay, d2		1.9	0.1		2.5		13.4	0.3		1.8	3.3	0.3
Delay (s)		36.6	32.8		36.7		45.3	12.9		44.1	29.9	22.6
Level of Service		D	C		D		D	B		D	C	C
Approach Delay (s)		35.2			36.7			27.4			28.4	
Approach LOS		D			D			C			C	

Intersection Summary				
HCM Average Control Delay	29.6	HCM Level of Service	C	
HCM Volume to Capacity ratio	0.68			
Actuated Cycle Length (s)	86.5	Sum of lost time (s)	16.0	
Intersection Capacity Utilization	66.3%	ICU Level of Service	C	
Analysis Period (min)	15			

c Critical Lane Group

Existing Conditions AM
18: Civitas & Mission Center Rd 1/15/2015

Movement	EBL	EBT	EBR	WBL	WBT	WBR	NBL	NBT	NBR	SBL	SBT	SBR
Lane Configurations												
Ideal Flow (vphpl)	1900	1900	1900	1900	1900	1900	1900	1900	1900	1900	1900	1900
Lane Width	12	12	16	12	12	12	10	12	12	12	12	12
Total Lost time (s)	4.0		4.0	4.0	4.0		4.0	4.0	4.0	4.0	4.0	
Lane Util. Factor	1.00		1.00	0.97	1.00		0.97	0.95	1.00	1.00	0.95	
Frpb, ped/bikes	1.00		1.00	1.00	1.00		1.00	1.00	1.00	1.00	1.00	
Flpb, ped/bikes	1.00		1.00	1.00	1.00		1.00	1.00	1.00	1.00	1.00	
Frt	1.00		0.85	1.00	0.88		1.00	1.00	0.85	1.00	0.92	
Flt Protected	0.95		1.00	0.95	1.00		0.95	1.00	1.00	0.95	1.00	
Satd. Flow (prot)	1770		1794	3433	1639		3204	3539	1583	1770	3242	
Flt Permitted	0.95		1.00	0.95	1.00		0.95	1.00	1.00	0.95	1.00	
Satd. Flow (perm)	1770		1794	3433	1639		3204	3539	1583	1770	3242	
Volume (vph)	42	0	62	56	4	15	283	96	25	8	185	236
Peak-hour factor, PHF	0.95	0.95	0.95	0.95	0.95	0.95	0.95	0.95	0.95	0.95	0.95	0.95
Adj. Flow (vph)	44	0	65	59	4	16	298	101	26	8	195	248
RTOR Reduction (vph)	0	0	58	0	14	0	0	0	12	0	183	0
Lane Group Flow (vph)	44	0	7	59	6	0	298	101	14	8	260	0
Confl. Peds. (#/hr)												
Turn Type	Prot		Perm	Prot			Prot		Perm	Prot		
Protected Phases	7	4		3	8		5	2		1	6	
Permitted Phases		4	4		8			2	2		6	
Actuated Green, G (s)	2.6		6.4	3.5	7.3		19.3	34.3	34.3	0.8	15.8	
Effective Green, g (s)	3.0		7.3	3.9	8.2		19.7	35.3	35.3	1.2	16.8	
Actuated g/C Ratio	0.05		0.11	0.06	0.13		0.31	0.55	0.55	0.02	0.26	
Clearance Time (s)	4.4		4.9	4.4	4.9		4.4	5.0	5.0	4.4	5.0	
Vehicle Extension (s)	3.0		3.0	3.0	3.0		3.0	3.0	3.0	3.0	3.0	
Lane Grp Cap (vph)	83		206	210	211		991	1961	877	33	855	
v/s Ratio Prot	c0.02			0.02	0.00		c0.09	0.03		0.00	c0.08	
v/s Ratio Perm			c0.00						0.01			
v/c Ratio	0.53		0.04	0.28	0.03		0.30	0.05	0.02	0.24	0.30	
Uniform Delay, d1	29.7		25.1	28.6	24.3		16.8	6.5	6.4	30.8	18.8	
Progression Factor	1.00		1.00	1.00	1.00		1.00	1.00	1.00	1.00	1.00	
Incremental Delay, d2	6.4		0.1	0.7	0.1		0.8	0.0	0.0	3.8	0.2	
Delay (s)	36.0		25.1	29.3	24.3		17.5	6.5	6.4	34.6	19.0	
Level of Service	D		C	C	C		B	A	A	C	B	
Approach Delay (s)		29.5			28.0			14.2			19.3	
Approach LOS		C			C			B			B	

Intersection Summary			
HCM Average Control Delay	19.0	HCM Level of Service	B
HCM Volume to Capacity ratio	0.27		
Actuated Cycle Length (s)	63.7	Sum of lost time (s)	16.0
Intersection Capacity Utilization	39.8%	ICU Level of Service	A
Analysis Period (min)	15		
c Critical Lane Group			

Existing Conditions AM
19: Mission Center Crt & Mission Center Rd 1/15/2015

Movement	EBL	EBT	EBR	WBL	WBT	WBR	NBL	NBT	NBR	SBL	SBT	SBR
Lane Configurations												
Ideal Flow (vphpl)	1900	1900	1900	1900	1900	1900	1900	1900	1900	1900	1900	1900
Lane Width	10	12	16	12	12	12	11	12	12	10	12	12
Total Lost time (s)		4.0			4.0		4.0	4.0		4.0	4.0	
Lane Util. Factor		1.00			1.00		1.00	0.95		1.00	0.95	
Frt		0.94			0.93		1.00	0.99		1.00	0.97	
Flt Protected		0.97			0.98		0.95	1.00		0.95	1.00	
Satd. Flow (prot)		1713			1690		1711	3501		1652	3419	
Flt Permitted		0.97			0.98		0.95	1.00		0.95	1.00	
Satd. Flow (perm)		1713			1690		1711	3501		1652	3419	
Volume (vph)	25	3	20	67	4	84	61	341	27	65	309	90
Peak-hour factor, PHF	0.95	0.95	0.95	0.95	0.95	0.95	0.95	0.95	0.95	0.95	0.95	0.95
Adj. Flow (vph)	26	3	21	71	4	88	64	359	28	68	325	95
RTOR Reduction (vph)	0	19	0	0	41	0	0	6	0	0	30	0
Lane Group Flow (vph)	0	31	0	0	122	0	64	381	0	68	390	0
Turn Type	Split			Split			Prot			Prot		
Protected Phases	4	4		3	3		5	2		1	6	
Permitted Phases												
Actuated Green, G (s)		3.8			4.9		2.8	6.2		2.8	6.3	
Effective Green, g (s)		3.8			4.9		2.8	7.5		2.8	7.5	
Actuated g/C Ratio		0.11			0.14		0.08	0.21		0.08	0.21	
Clearance Time (s)		4.0			4.0		4.0	5.3		4.0	5.2	
Vehicle Extension (s)		3.0			3.0		3.0	3.0		3.0	3.0	
Lane Grp Cap (vph)		186			237		137	750		132	733	
v/s Ratio Prot		c0.02			c0.07		0.04	0.11		c0.04	c0.11	
v/s Ratio Perm												
v/c Ratio		0.17			0.51		0.47	0.51		0.52	0.53	
Uniform Delay, d1		14.2			13.9		15.4	12.1		15.4	12.2	
Progression Factor		1.00			1.00		1.00	1.00		1.00	1.00	
Incremental Delay, d2		0.4			1.9		2.5	0.5		3.4	0.7	
Delay (s)		14.6			15.8		17.9	12.7		18.8	12.9	
Level of Service		B			B		B	B		B	B	
Approach Delay (s)		14.6			15.8			13.4			13.8	
Approach LOS		B			B			B			B	

Intersection Summary			
HCM Average Control Delay	13.9	HCM Level of Service	B
HCM Volume to Capacity ratio	0.45		
Actuated Cycle Length (s)	35.0	Sum of lost time (s)	16.0
Intersection Capacity Utilization	35.4%	ICU Level of Service	A
Analysis Period (min)	15		
c Critical Lane Group			

Existing Conditions AM
23: I-805 NB Ramps & Murray Ridge Rd 1/15/2015

Movement	EBL	EBT	EBR	WBL	WBT	WBR	NBL	NBT	NBR	SBL	SBT	SBR
Lane Configurations												
Ideal Flow (vphpl)	1900	1900	1900	1900	1900	1900	1900	1900	1900	1900	1900	1900
Lane Width	12	12	12	16	12	16	12	16	12	12	16	11
Total Lost time (s)					4.0	4.0	4.0	4.0			4.0	
Lane Util. Factor					1.00	1.00	1.00	1.00			0.95	
Frpb, ped/bikes					1.00	1.00	1.00	1.00			1.00	
Flpb, ped/bikes					1.00	1.00	1.00	1.00			1.00	
Frt					1.00	0.85	1.00	1.00			0.94	
Flt Protected					0.95	1.00	0.95	1.00			1.00	
Satd. Flow (prot)					1770	1794	1770	2111			3761	
Flt Permitted					0.95	1.00	0.95	1.00			1.00	
Satd. Flow (perm)					1770	1794	1770	2111			3761	
Volume (vph)	0	0	0	18	0	494	35	265	0	0	371	264
Peak-hour factor, PHF	0.95	0.95	0.95	0.95	0.95	0.95	0.95	0.95	0.95	0.95	0.95	0.95
Adj. Flow (vph)	0	0	0	19	0	520	37	279	0	0	391	278
RTOR Reduction (vph)	0	0	0	0	0	383	0	0	0	0	150	0
Lane Group Flow (vph)	0	0	0	0	19	137	37	279	0	0	519	0
Confl. Peds. (#/hr)												
Turn Type				Perm		Perm	Prot					
Protected Phases					6		3	8			4	
Permitted Phases				6		6						
Actuated Green, G (s)					8.1	8.1	0.9	15.5			10.1	
Effective Green, g (s)					8.6	8.6	1.4	16.0			10.6	
Actuated g/C Ratio					0.26	0.26	0.04	0.49			0.33	
Clearance Time (s)					4.5	4.5	4.5	4.5			4.5	
Vehicle Extension (s)					3.0	3.0	3.0	3.0			3.0	
Lane Grp Cap (vph)					467	473	76	1036			1223	
v/s Ratio Prot							0.02	c0.13			c0.14	
v/s Ratio Perm					0.01	c0.08						
v/c Ratio					0.04	0.29	0.49	0.27			0.42	
Uniform Delay, d1					8.9	9.6	15.2	4.9			8.6	
Progression Factor					1.00	1.00	1.00	1.00			1.00	
Incremental Delay, d2					0.0	0.3	4.8	0.1			0.2	
Delay (s)					9.0	9.9	20.1	5.0			8.9	
Level of Service					A	A	C	A			A	
Approach Delay (s)		0.0			9.9			6.8			8.9	
Approach LOS		A			A			A			A	

Intersection Summary			
HCM Average Control Delay	8.8	HCM Level of Service	A
HCM Volume to Capacity ratio	0.38		
Actuated Cycle Length (s)	32.6	Sum of lost time (s)	12.0
Intersection Capacity Utilization	51.2%	ICU Level of Service	A
Analysis Period (min)	15		
c Critical Lane Group			

Existing Conditions AM
24: I-805 SB Ramps & Murray Ridge Rd 1/15/2015

Movement	EBL	EBT	EBR	WBL	WBT	WBR	NBL	NBT	NBR	SBL	SBT	SBR
Lane Configurations												
Ideal Flow (vphpl)	1900	1900	1900	1900	1900	1900	1900	1900	1900	1900	1900	1900
Lane Width	12	14	12	12	12	12	12	16	12	12	15	12
Total Lost time (s)		4.0	4.0					4.0		4.0	4.0	
Lane Util. Factor		1.00	1.00					1.00		1.00	1.00	
Frpb, ped/bikes		1.00	1.00					1.00		1.00	1.00	
Flpb, ped/bikes		1.00	1.00					1.00		1.00	1.00	
Frt		1.00	0.85					0.95		1.00	1.00	
Flt Protected		0.95	1.00					1.00		0.95	1.00	
Satd. Flow (prot)		1888	1583					2006		1770	2049	
Flt Permitted		0.95	1.00					1.00		0.95	1.00	
Satd. Flow (perm)		1888	1583					2006		1770	2049	
Volume (vph)	250	0	16	0	0	0	0	57	33	310	30	0
Peak-hour factor, PHF	0.95	0.95	0.95	0.95	0.95	0.95	0.95	0.95	0.95	0.95	0.95	0.95
Adj. Flow (vph)	263	0	17	0	0	0	0	60	35	326	32	0
RTOR Reduction (vph)	0	0	13	0	0	0	0	26	0	0	0	0
Lane Group Flow (vph)	0	263	4	0	0	0	0	69	0	326	32	0
Confl. Peds. (#/hr)												
Turn Type	Perm		Perm							Prot		
Protected Phases		4						2		1	6	
Permitted Phases	4		4									
Actuated Green, G (s)		9.5	9.5					4.6		11.3	20.1	
Effective Green, g (s)		10.5	10.5					5.9		11.5	21.4	
Actuated g/C Ratio		0.26	0.26					0.15		0.29	0.54	
Clearance Time (s)		5.0	5.0					5.3		4.2	5.3	
Vehicle Extension (s)		3.0	3.0					3.0		3.0	3.0	
Lane Grp Cap (vph)		497	417					297		510	1099	
v/s Ratio Prot								c0.03		c0.18	0.02	
v/s Ratio Perm		0.14	0.00									
v/c Ratio		0.53	0.01					0.23		0.64	0.03	
Uniform Delay, d1		12.6	10.9					15.0		12.4	4.4	
Progression Factor		1.00	1.00					1.00		1.00	1.00	
Incremental Delay, d2		1.0	0.0					0.4		2.6	0.0	
Delay (s)		13.6	10.9					15.4		15.0	4.4	
Level of Service		B	B					B		B	A	
Approach Delay (s)		13.4			0.0			15.4			14.1	
Approach LOS		B			A			B			B	

Intersection Summary			
HCM Average Control Delay	14.0	HCM Level of Service	B
HCM Volume to Capacity ratio	0.51		
Actuated Cycle Length (s)	39.9	Sum of lost time (s)	12.0
Intersection Capacity Utilization	51.2%	ICU Level of Service	A
Analysis Period (min)	15		
c Critical Lane Group			

Existing Conditions AM
25: Rio San Diego Drive & Qualcomm Wy 1/15/2015

Movement	EBL	EBT	EBR	WBL	WBT	WBR	NBL	NBT	NBR	SBL	SBT	SBR
Lane Configurations												
Ideal Flow (vphpl)	1900	1900	1900	1900	1900	1900	1900	1900	1900	1900	1900	1900
Lane Width	12	12	14	12	12	12	10	12	12	12	12	12
Total Lost time (s)	4.0	4.0	4.0	4.0	4.0	4.0	4.0	4.0		4.0	4.0	
Lane Util. Factor	0.97	1.00	1.00	0.97	0.95	1.00	0.97	0.91		0.97	0.91	
Frpb, ped/bikes	1.00	1.00	1.00	1.00	1.00	1.00	1.00	1.00		1.00	1.00	
Flpb, ped/bikes	1.00	1.00	1.00	1.00	1.00	1.00	1.00	1.00		1.00	1.00	
Frt	1.00	1.00	0.85	1.00	1.00	0.85	1.00	0.90		1.00	0.98	
Flt Protected	0.95	1.00	1.00	0.95	1.00	1.00	0.95	1.00		0.95	1.00	
Satd. Flow (prot)	3433	1863	1689	3433	3539	1583	3204	4602		3433	4992	
Flt Permitted	0.95	1.00	1.00	0.73	1.00	1.00	0.95	1.00		0.30	1.00	
Satd. Flow (perm)	3433	1863	1689	2620	3539	1583	3204	4602		1076	4992	
Volume (vph)	86	47	104	223	28	62	75	320	555	79	177	25
Peak-hour factor, PHF	0.95	0.95	0.95	0.95	0.95	0.95	0.95	0.95	0.95	0.95	0.95	0.95
Adj. Flow (vph)	91	49	109	235	29	65	79	337	584	83	186	26
RTOR Reduction (vph)	0	0	55	0	0	48	0	285	0	0	19	0
Lane Group Flow (vph)	91	49	54	235	29	17	79	636	0	83	193	0
Confl. Peds. (#/hr)												
Turn Type	Prot		pm+ov	Perm		Perm	Prot			Perm		
Protected Phases	5	2	3		6		3	8			4	
Permitted Phases			2	6		6				4		
Actuated Green, G (s)	3.1	20.1	24.6	12.7	12.7	12.7	4.5	22.1		13.2	13.2	
Effective Green, g (s)	3.5	21.2	26.1	13.7	13.7	13.7	4.9	23.4		14.5	14.5	
Actuated g/C Ratio	0.07	0.40	0.50	0.26	0.26	0.26	0.09	0.44		0.28	0.28	
Clearance Time (s)	4.4	5.1	4.4	5.0	5.0	5.0	4.4	5.3		5.3	5.3	
Vehicle Extension (s)	3.0	3.0	3.0	3.0	3.0	3.0	3.0	3.0		3.0	3.0	
Lane Grp Cap (vph)	228	751	967	682	922	412	298	2047		297	1376	
v/s Ratio Prot	c0.03	0.03	0.01		0.01		0.02	c0.14			0.04	
v/s Ratio Perm			0.03	c0.09		0.01				0.08		
v/c Ratio	0.40	0.07	0.06	0.34	0.03	0.04	0.27	0.31		0.28	0.14	
Uniform Delay, d1	23.5	9.6	6.9	15.8	14.5	14.5	22.2	9.4		15.0	14.4	
Progression Factor	1.00	1.00	1.00	1.00	1.00	1.00	1.00	1.00		1.00	1.00	
Incremental Delay, d2	1.1	0.0	0.0	0.3	0.0	0.0	0.5	0.1		0.5	0.0	
Delay (s)	24.7	9.7	6.9	16.1	14.5	14.6	22.7	9.5		15.5	14.4	
Level of Service	C	A	A	B	B	B	C	A		B	B	
Approach Delay (s)		13.9			15.7			10.5			14.7	
Approach LOS		B			B			B			B	

Intersection Summary			
HCM Average Control Delay	12.5	HCM Level of Service	B
HCM Volume to Capacity ratio	0.33		
Actuated Cycle Length (s)	52.6	Sum of lost time (s)	12.0
Intersection Capacity Utilization	45.0%	ICU Level of Service	A
Analysis Period (min)	15		

c Critical Lane Group

Existing Conditions AM
26: Rio San Diego Drive & Rio Bonito Wy 1/15/2015

Movement	EBL	EBT	EBR	WBL	WBT	WBR	NBL	NBT	NBR	SBL	SBT	SBR
Lane Configurations												
Ideal Flow (vphpl)	1900	1900	1900	1900	1900	1900	1900	1900	1900	1900	1900	1900
Total Lost time (s)	4.0	4.0		4.0	4.0			4.0		4.0	4.0	
Lane Util. Factor	1.00	0.95		1.00	0.95			1.00		1.00	1.00	
Frt	1.00	0.98		1.00	1.00			0.98		1.00	0.89	
Flt Protected	0.95	1.00		0.95	1.00			0.97		0.95	1.00	
Satd. Flow (prot)	1770	3452		1770	3522			1762		1770	1650	
Flt Permitted	0.58	1.00		0.50	1.00			0.91		0.75	1.00	
Satd. Flow (perm)	1072	3452		935	3522			1654		1397	1650	
Volume (vph)	51	300	59	24	257	9	8	2	2	33	16	51
Peak-hour factor, PHF	0.95	0.95	0.95	0.95	0.95	0.95	0.95	0.95	0.95	0.95	0.95	0.95
Adj. Flow (vph)	54	316	62	25	271	9	8	2	2	35	17	54
RTOR Reduction (vph)	0	18	0	0	3	0	0	1	0	0	30	0
Lane Group Flow (vph)	54	360	0	25	277	0	0	11	0	35	41	0
Turn Type	Perm			Perm			Perm			Perm		
Protected Phases		4			8			2			6	
Permitted Phases	4			8			2			6		
Actuated Green, G (s)	41.0	41.0		41.0	41.0			40.0		40.0	40.0	
Effective Green, g (s)	41.5	41.5		41.5	41.5			40.5		40.5	40.5	
Actuated g/C Ratio	0.46	0.46		0.46	0.46			0.45		0.45	0.45	
Clearance Time (s)	4.5	4.5		4.5	4.5			4.5		4.5	4.5	
Lane Grp Cap (vph)	494	1592		431	1624			744		629	743	
v/s Ratio Prot		c0.10			0.08						0.03	
v/s Ratio Perm	0.05			0.03				0.01		c0.03		
v/c Ratio	0.11	0.23		0.06	0.17			0.01		0.06	0.06	
Uniform Delay, d1	13.8	14.6		13.4	14.2			13.7		14.0	14.0	
Progression Factor	1.00	1.00		1.00	1.00			1.00		1.00	1.00	
Incremental Delay, d2	0.4	0.3		0.3	0.2			0.0		0.2	0.1	
Delay (s)	14.2	14.9		13.7	14.4			13.7		14.1	14.1	
Level of Service	B	B		B	B			B		B	B	
Approach Delay (s)		14.8			14.4			13.7			14.1	
Approach LOS		B			B			B			B	

Intersection Summary			
HCM Average Control Delay	14.6	HCM Level of Service	B
HCM Volume to Capacity ratio	0.14		
Actuated Cycle Length (s)	90.0	Sum of lost time (s)	8.0
Intersection Capacity Utilization	30.8%	ICU Level of Service	A
Analysis Period (min)	15		

c Critical Lane Group

Existing Conditions AM
55: Via Alta & Mission Center Rd 1/15/2015

Movement	EBL	EBT	EBR	WBL	WBT	WBR	NBL	NBT	NBR	SBL	SBT	SBR
Lane Configurations												
Ideal Flow (vphpl)	1900	1900	1900	1900	1900	1900	1900	1900	1900	1900	1900	1900
Total Lost time (s)		4.0	4.0	4.0	4.0		4.0	4.0	4.0		4.0	
Lane Util. Factor		1.00	1.00	1.00	1.00		0.97	0.91	1.00		0.95	
Frt		1.00	0.85	1.00	0.95		1.00	1.00	0.85		0.98	
Flt Protected		0.96	1.00	0.95	1.00		0.95	1.00	1.00		1.00	
Satd. Flow (prot)		1786	1583	1770	1765		3433	5085	1583		3460	
Flt Permitted		0.82	1.00	0.73	1.00		0.51	1.00	1.00		1.00	
Satd. Flow (perm)		1534	1583	1358	1765		1838	5085	1583		3460	
Volume (vph)	35	6	129	48	12	7	187	465	16	0	292	51
Peak-hour factor, PHF	0.95	0.95	0.95	0.95	0.95	0.95	0.95	0.95	0.95	0.95	0.95	0.95
Adj. Flow (vph)	37	6	136	51	13	7	197	489	17	0	307	54
RTOR Reduction (vph)	0	0	74	0	4	0	0	0	9	0	14	0
Lane Group Flow (vph)	0	43	62	51	16	0	197	489	8	0	347	0
Turn Type	Perm		Perm	Perm			Perm		Perm	Perm		
Protected Phases		4			8			2			6	
Permitted Phases	4		4	8			2		2	6		
Actuated Green, G (s)		47.0	47.0	47.0	47.0		49.0	49.0	49.0		49.0	
Effective Green, g (s)		47.5	47.5	47.5	47.5		49.5	49.5	49.5		49.5	
Actuated g/C Ratio		0.45	0.45	0.45	0.45		0.47	0.47	0.47		0.47	
Clearance Time (s)		4.5	4.5	4.5	4.5		4.5	4.5	4.5		4.5	
Lane Grp Cap (vph)		694	716	614	798		866	2397	746		1631	
v/s Ratio Prot					0.01			0.10			0.10	
v/s Ratio Perm		0.03	c0.04	0.04			c0.11		0.01			
v/c Ratio		0.06	0.09	0.08	0.02		0.23	0.20	0.01		0.21	
Uniform Delay, d1		16.2	16.4	16.4	15.9		16.4	16.2	14.7		16.3	
Progression Factor		1.00	1.00	1.00	1.00		1.00	1.00	1.00		1.00	
Incremental Delay, d2		0.2	0.2	0.3	0.0		0.6	0.2	0.0		0.3	
Delay (s)		16.4	16.6	16.6	15.9		17.0	16.4	14.8		16.6	
Level of Service		B	B	B	B		B	B	B		B	
Approach Delay (s)		16.6			16.4			16.6			16.6	
Approach LOS		B			B			B			B	

Intersection Summary			
HCM Average Control Delay	16.6	HCM Level of Service	B
HCM Volume to Capacity ratio	0.16		
Actuated Cycle Length (s)	105.0	Sum of lost time (s)	8.0
Intersection Capacity Utilization	34.4%	ICU Level of Service	A
Analysis Period (min)	15		

c Critical Lane Group

Existing Conditions AM
56: Aquatera Driveway & 1/15/2015

Movement	EBL	EBT	EBR	WBL	WBT	WBR	NBL	NBT	NBR	SBL	SBT	SBR
Lane Configurations												
Ideal Flow (vphpl)	1900	1900	1900	1900	1900	1900	1900	1900	1900	1900	1900	1900
Total Lost time (s)		4.0		4.0	4.0		4.0	4.0	4.0	4.0	4.0	
Lane Util. Factor		1.00		0.95	0.95		1.00	0.95	1.00	1.00	0.95	
Frt		0.88		1.00	0.91		1.00	1.00	0.85	1.00	0.99	
Flt Protected		1.00		0.95	0.98		0.95	1.00	1.00	0.95	1.00	
Satd. Flow (prot)		1643		1681	1583		1770	3539	1583	1770	3495	
Flt Permitted		1.00		0.75	0.95		0.40	1.00	1.00	0.66	1.00	
Satd. Flow (perm)		1643		1332	1528		739	3539	1583	1229	3495	
Volume (vph)	0	1	7	17	0	10	32	138	11	4	472	43
Peak-hour factor, PHF	0.95	0.95	0.95	0.95	0.95	0.95	0.95	0.95	0.95	0.95	0.95	0.95
Adj. Flow (vph)	0	1	7	18	0	11	34	145	12	4	497	45
RTOR Reduction (vph)	0	4	0	0	6	0	0	0	6	0	7	0
Lane Group Flow (vph)	0	4	0	10	13	0	34	145	6	4	535	0
Turn Type	Perm			Perm			Perm		Perm	Perm		
Protected Phases		4			8			2			6	
Permitted Phases	4			8			2		2	6		
Actuated Green, G (s)		45.0		45.0	45.0		51.0	51.0	51.0	51.0	51.0	
Effective Green, g (s)		45.5		45.5	45.5		51.5	51.5	51.5	51.5	51.5	
Actuated g/C Ratio		0.43		0.43	0.43		0.49	0.49	0.49	0.49	0.49	
Clearance Time (s)		4.5		4.5	4.5		4.5	4.5	4.5	4.5	4.5	
Lane Grp Cap (vph)		712		577	662		362	1736	776	603	1714	
v/s Ratio Prot		0.00						0.04			c0.15	
v/s Ratio Perm				0.01	c0.01		0.05		0.00	0.00		
v/c Ratio		0.01		0.02	0.02		0.09	0.08	0.01	0.01	0.31	
Uniform Delay, d1		16.9		17.0	17.0		14.3	14.2	13.7	13.7	16.1	
Progression Factor		1.00		1.00	1.00		1.00	1.00	1.00	1.00	1.00	
Incremental Delay, d2		0.0		0.1	0.1		0.5	0.1	0.0	0.0	0.5	
Delay (s)		16.9		17.0	17.1		14.8	14.3	13.7	13.7	16.6	
Level of Service		B		B	B		B	B	B	B	B	
Approach Delay (s)		16.9			17.0			14.4			16.6	
Approach LOS		B			B			B			B	

Intersection Summary			
HCM Average Control Delay	16.0	HCM Level of Service	B
HCM Volume to Capacity ratio	0.17		
Actuated Cycle Length (s)	105.0	Sum of lost time (s)	8.0
Intersection Capacity Utilization	35.2%	ICU Level of Service	A
Analysis Period (min)	15		

c Critical Lane Group

Existing Conditions AM
57: Pinecrest & Murray Ridge Rd 1/15/2015

Movement	EBL	EBT	EBR	WBL	WBT	WBR	NBL	NBT	NBR	SBL	SBT	SBR
Lane Configurations												
Ideal Flow (vphpl)	1900	1900	1900	1900	1900	1900	1900	1900	1900	1900	1900	1900
Total Lost time (s)		4.0			4.0		4.0	4.0		4.0	4.0	
Lane Util. Factor		1.00			1.00		1.00	1.00		1.00	1.00	
Frt		0.87			0.97		1.00	1.00		1.00	1.00	
Flt Protected		1.00			0.97		0.95	1.00		0.95	1.00	
Satd. Flow (prot)		1617			1746		1770	1855		1770	1861	
Flt Permitted		1.00			0.83		0.42	1.00		0.38	1.00	
Satd. Flow (perm)		1615			1499		778	1855		709	1861	
Volume (vph)	1	1	73	39	9	16	23	453	13	5	417	3
Peak-hour factor, PHF	0.95	0.95	0.95	0.95	0.95	0.95	0.95	0.95	0.95	0.95	0.95	0.95
Adj. Flow (vph)	1	1	77	41	9	17	24	477	14	5	439	3
RTOR Reduction (vph)	0	50	0	0	11	0	0	1	0	0	0	0
Lane Group Flow (vph)	0	29	0	0	56	0	24	490	0	5	442	0
Turn Type	Perm			Perm			Perm			Perm		
Protected Phases		4			8			2			6	
Permitted Phases	4			8			2			6		
Actuated Green, G (s)		31.0			31.0		50.0	50.0		50.0	50.0	
Effective Green, g (s)		31.5			31.5		50.5	50.5		50.5	50.5	
Actuated g/C Ratio		0.35			0.35		0.56	0.56		0.56	0.56	
Clearance Time (s)		4.5			4.5		4.5	4.5		4.5	4.5	
Lane Grp Cap (vph)		565			525		437	1041		398	1044	
v/s Ratio Prot								c0.26			0.24	
v/s Ratio Perm		0.02			c0.04		0.03			0.01		
v/c Ratio		0.05			0.11		0.05	0.47		0.01	0.42	
Uniform Delay, d1		19.4			19.7		8.9	11.8		8.7	11.4	
Progression Factor		1.00			1.00		1.00	1.00		1.00	1.00	
Incremental Delay, d2		0.2			0.4		0.2	1.5		0.1	1.3	
Delay (s)		19.5			20.2		9.2	13.3		8.8	12.6	
Level of Service		B			C		A	B		A	B	
Approach Delay (s)		19.5			20.2			13.1			12.6	
Approach LOS		B			C			B			B	

Intersection Summary			
HCM Average Control Delay	13.8	HCM Level of Service	B
HCM Volume to Capacity ratio	0.33		
Actuated Cycle Length (s)	90.0	Sum of lost time (s)	8.0
Intersection Capacity Utilization	41.6%	ICU Level of Service	A
Analysis Period (min)	15		

c Critical Lane Group

Existing Conditions AM
58: Murray Ridge Rd Ave & Sandrock Rd 1/15/2015

Movement	EBL	EBT	EBR	WBL	WBT	WBR	NBL	NBT	NBR	SBL	SBT	SBR
Lane Configurations												
Ideal Flow (vphpl)	1900	1900	1900	1900	1900	1900	1900	1900	1900	1900	1900	1900
Total Lost time (s)	4.0	4.0	4.0		4.0		4.0	4.0		4.0	4.0	
Lane Util. Factor	1.00	1.00	1.00		1.00		1.00	1.00		1.00	1.00	
Frt	1.00	1.00	0.85		0.94		1.00	0.99		1.00	0.92	
Flt Protected	0.95	1.00	1.00		1.00		0.95	1.00		0.95	1.00	
Satd. Flow (prot)	1770	1863	1583		1749		1770	1847		1770	1722	
Flt Permitted	0.57	1.00	1.00		0.99		0.53	1.00		0.41	1.00	
Satd. Flow (perm)	1070	1863	1583		1732		993	1847		770	1722	
Volume (vph)	254	84	54	13	127	108	62	304	18	40	112	113
Peak-hour factor, PHF	0.95	0.95	0.95	0.95	0.95	0.95	0.95	0.95	0.95	0.95	0.95	0.95
Adj. Flow (vph)	267	88	57	14	134	114	65	320	19	42	118	119
RTOR Reduction (vph)	0	0	27	0	31	0	0	2	0	0	40	0
Lane Group Flow (vph)	267	88	30	0	231	0	65	337	0	42	197	0
Turn Type	Perm		Perm	Perm			Perm			Perm		
Protected Phases		4			8			2			6	
Permitted Phases	4		4	8			2			6		
Actuated Green, G (s)	47.0	47.0	47.0		47.0		34.0	34.0		34.0	34.0	
Effective Green, g (s)	47.5	47.5	47.5		47.5		34.5	34.5		34.5	34.5	
Actuated g/C Ratio	0.53	0.53	0.53		0.53		0.38	0.38		0.38	0.38	
Clearance Time (s)	4.5	4.5	4.5		4.5		4.5	4.5		4.5	4.5	
Lane Grp Cap (vph)	565	983	835		914		381	708		295	660	
v/s Ratio Prot		0.05						c0.18			0.11	
v/s Ratio Perm	c0.25		0.02		0.13		0.07			0.05		
v/c Ratio	0.47	0.09	0.04		0.25		0.17	0.48		0.14	0.30	
Uniform Delay, d1	13.4	10.5	10.2		11.6		18.3	20.9		18.1	19.3	
Progression Factor	1.00	1.00	1.00		1.00		1.00	1.00		1.00	1.00	
Incremental Delay, d2	2.8	0.2	0.1		0.7		1.0	2.3		1.0	1.2	
Delay (s)	16.2	10.7	10.3		12.2		19.3	23.2		19.1	20.5	
Level of Service	B	B	B		B		B	C		B	C	
Approach Delay (s)		14.2			12.2			22.6			20.3	
Approach LOS		B			B			C			C	

Intersection Summary			
HCM Average Control Delay	17.6	HCM Level of Service	B
HCM Volume to Capacity ratio	0.47		
Actuated Cycle Length (s)	90.0	Sum of lost time (s)	8.0
Intersection Capacity Utilization	61.8%	ICU Level of Service	B
Analysis Period (min)	15		

c Critical Lane Group

Existing Conditions AM
59: Aero Dr & Sandrock Rd 1/15/2015

Movement	EBL	EBT	EBR	WBL	WBT	WBR	NBL	NBT	NBR	SBL	SBT	SBR
Lane Configurations												
Ideal Flow (vphpl)	1900	1900	1900	1900	1900	1900	1900	1900	1900	1900	1900	1900
Total Lost time (s)	4.0	4.0	4.0	4.0	4.0		4.0	4.0	4.0	4.0	4.0	
Lane Util. Factor	1.00	0.95	1.00	1.00	0.95		0.95	0.95	1.00	1.00	1.00	
Frt	1.00	1.00	0.85	1.00	0.99		1.00	1.00	0.85	1.00	0.89	
Flt Protected	0.95	1.00	1.00	0.95	1.00		0.95	0.96	1.00	0.95	1.00	
Satd. Flow (prot)	1770	3539	1583	1770	3490		1681	1696	1583	1770	1653	
Flt Permitted	0.33	1.00	1.00	0.47	1.00		0.74	0.74	1.00	0.56	1.00	
Satd. Flow (perm)	624	3539	1583	883	3490		1312	1306	1583	1040	1653	
Volume (vph)	36	464	149	86	604	62	467	37	157	10	6	17
Peak-hour factor, PHF	0.95	0.95	0.95	0.95	0.95	0.95	0.95	0.95	0.95	0.95	0.95	0.95
Adj. Flow (vph)	38	488	157	91	636	65	492	39	165	11	6	18
RTOR Reduction (vph)	0	0	96	0	9	0	0	0	99	0	11	0
Lane Group Flow (vph)	38	488	61	91	692	0	246	285	66	11	13	0
Turn Type	Perm		Perm	Perm			Perm		Perm	Perm		
Protected Phases		4			8			2			6	
Permitted Phases	4		4	8			2		2	6		
Actuated Green, G (s)	13.9	13.9	13.9	13.9	13.9		14.3	14.3	14.3	14.3	14.3	
Effective Green, g (s)	14.4	14.4	14.4	14.4	14.4		14.8	14.8	14.8	14.8	14.8	
Actuated g/C Ratio	0.39	0.39	0.39	0.39	0.39		0.40	0.40	0.40	0.40	0.40	
Clearance Time (s)	4.5	4.5	4.5	4.5	4.5		4.5	4.5	4.5	4.5	4.5	
Vehicle Extension (s)	3.0	3.0	3.0	3.0	3.0		3.0	3.0	3.0	3.0	3.0	
Lane Grp Cap (vph)	242	1370	613	342	1351		522	520	630	414	658	
v/s Ratio Prot		0.14			c0.20						0.01	
v/s Ratio Perm	0.06		0.04	0.10			0.19	c0.22	0.04	0.01		
v/c Ratio	0.16	0.36	0.10	0.27	0.51		0.47	0.55	0.10	0.03	0.02	
Uniform Delay, d1	7.4	8.1	7.3	7.8	8.7		8.3	8.6	7.0	6.8	6.8	
Progression Factor	1.00	1.00	1.00	1.00	1.00		1.00	1.00	1.00	1.00	1.00	
Incremental Delay, d2	0.3	0.2	0.1	0.4	0.3		0.7	1.2	0.1	0.0	0.0	
Delay (s)	7.7	8.3	7.3	8.2	9.0		9.0	9.8	7.1	6.8	6.8	
Level of Service	A	A	A	A	A		A	A	A	A	A	
Approach Delay (s)		8.0			8.9			8.9			6.8	
Approach LOS		A			A			A			A	

Intersection Summary			
HCM Average Control Delay	8.6	HCM Level of Service	A
HCM Volume to Capacity ratio	0.53		
Actuated Cycle Length (s)	37.2	Sum of lost time (s)	8.0
Intersection Capacity Utilization	52.6%	ICU Level of Service	A
Analysis Period (min)	15		

c Critical Lane Group

Existing Conditions PM
4: Friars Rd EB Ramps & Mission Center Rd 1/15/2015

Movement	EBL	EBT	EBR	WBL	WBT	WBR	NBL	NBT	NBR	SBL	SBT	SBR
Lane Configurations												
Ideal Flow (vphpl)	1900	1900	1900	1900	1900	1900	1900	1900	1900	1900	1900	1900
Lane Width	14	12	13	12	12	12	12	13	12	15	16	12
Total Lost time (s)	4.0	4.0	4.0					4.0		4.0	4.0	
Lane Util. Factor	0.95	0.95	1.00					0.95		0.97	0.95	
Frpb, ped/bikes	1.00	1.00	1.00					1.00		1.00	1.00	
Flpb, ped/bikes	1.00	1.00	1.00					1.00		1.00	1.00	
Frt	1.00	1.00	0.85					0.98		1.00	1.00	
Flt Protected	0.95	0.95	1.00					1.00		0.95	1.00	
Satd. Flow (prot)	1793	1688	1636					3581		3776	4011	
Flt Permitted	0.95	0.95	1.00					1.00		0.95	1.00	
Satd. Flow (perm)	1793	1688	1636					3581		3776	4011	
Volume (vph)	196	3	280	0	0	0	0	562	90	393	558	0
Peak-hour factor, PHF	0.95	0.95	0.95	0.95	0.95	0.95	0.95	0.95	0.95	0.95	0.95	0.95
Adj. Flow (vph)	206	3	295	0	0	0	0	592	95	414	587	0
RTOR Reduction (vph)	0	0	236	0	0	0	0	14	0	0	0	0
Lane Group Flow (vph)	105	104	59	0	0	0	0	673	0	414	587	0
Confl. Peds. (#/hr)												
Turn Type	Split		Perm							Prot		
Protected Phases	4	4						2		1	6	
Permitted Phases			4									
Actuated Green, G (s)	9.0	9.0	9.0					15.0		10.8	29.6	
Effective Green, g (s)	9.9	9.9	9.9					16.0		11.2	31.2	
Actuated g/C Ratio	0.20	0.20	0.20					0.33		0.23	0.64	
Clearance Time (s)	4.9	4.9	4.9					5.0		4.4	5.6	
Vehicle Extension (s)	3.0	3.0	3.0					3.0		3.0	3.0	
Lane Grp Cap (vph)	362	340	330					1167		861	2549	
v/s Ratio Prot	0.06	c0.06						c0.19		c0.11	0.15	
v/s Ratio Perm			0.04									
v/c Ratio	0.29	0.31	0.18					0.58		0.48	0.23	
Uniform Delay, d1	16.6	16.7	16.2					13.7		16.4	3.8	
Progression Factor	1.00	1.00	1.00					1.00		1.00	1.00	
Incremental Delay, d2	0.4	0.5	0.3					0.7		0.4	0.0	
Delay (s)	17.1	17.2	16.5					14.4		16.9	3.9	
Level of Service	B	B	B					B		B	A	
Approach Delay (s)		16.8			0.0			14.4			9.2	
Approach LOS		B			A			B			A	

Intersection Summary				
HCM Average Control Delay	12.6	HCM Level of Service	B	
HCM Volume to Capacity ratio	0.48			
Actuated Cycle Length (s)	49.1	Sum of lost time (s)	12.0	
Intersection Capacity Utilization	45.1%	ICU Level of Service	A	
Analysis Period (min)	15			
c Critical Lane Group				

Existing Conditions PM
5: Friars Rd WB Ramps & Mission Center Rd 1/15/2015

Movement	EBL	EBT	EBR	WBL	WBT	WBR	NBL	NBT	NBR	SBL	SBT	SBR
Lane Configurations												
Ideal Flow (vphpl)	1900	1900	1900	1900	1900	1900	1900	1900	1900	1900	1900	1900
Lane Width	12	12	12	15	12	15	10	12	12	12	14	11
Total Lost time (s)				4.0	4.0	4.0	4.0	4.0			4.0	4.0
Lane Util. Factor				0.95	0.95	1.00	0.97	0.95			0.95	1.00
Frpb, ped/bikes				1.00	1.00	1.00	1.00	1.00			1.00	1.00
Flpb, ped/bikes				1.00	1.00	1.00	1.00	1.00			1.00	1.00
Frt				1.00	1.00	0.85	1.00	1.00			1.00	0.85
Flt Protected				0.95	0.95	1.00	0.95	1.00			1.00	1.00
Satd. Flow (prot)				1849	1681	1742	3204	3539			3775	1531
Flt Permitted				0.95	0.95	1.00	0.95	1.00			1.00	1.00
Satd. Flow (perm)				1849	1681	1742	3204	3539			3775	1531
Volume (vph)	0	0	0	148	0	265	218	477	0	0	843	187
Peak-hour factor, PHF	0.95	0.95	0.95	0.95	0.95	0.95	0.95	0.95	0.95	0.95	0.95	0.95
Adj. Flow (vph)	0	0	0	156	0	279	229	502	0	0	887	197
RTOR Reduction (vph)	0	0	0	0	0	230	0	0	0	0	0	89
Lane Group Flow (vph)	0	0	0	80	76	49	229	502	0	0	887	108
Confl. Peds. (#/hr)												
Turn Type				Split		Perm	Prot					Perm
Protected Phases				8	8		5	2			6	
Permitted Phases						8						6
Actuated Green, G (s)				7.9	7.9	7.9	7.0	32.5			20.1	20.1
Effective Green, g (s)				8.8	8.8	8.8	7.4	33.5			22.1	22.1
Actuated g/C Ratio				0.17	0.17	0.17	0.15	0.67			0.44	0.44
Clearance Time (s)				4.9	4.9	4.9	4.4	5.0			6.0	6.0
Vehicle Extension (s)				3.0	3.0	3.0	3.0	3.0			3.0	3.0
Lane Grp Cap (vph)				323	294	305	471	2357			1659	673
v/s Ratio Prot				0.04	c0.05		c0.07	0.14			c0.23	
v/s Ratio Perm						0.03						0.07
v/c Ratio				0.25	0.26	0.16	0.49	0.21			0.53	0.16
Uniform Delay, d1				17.9	17.9	17.6	19.7	3.3			10.3	8.5
Progression Factor				1.00	1.00	1.00	1.00	1.00			1.00	1.00
Incremental Delay, d2				0.4	0.5	0.2	0.8	0.0			0.3	0.1
Delay (s)				18.3	18.4	17.9	20.5	3.3			10.7	8.6
Level of Service				B	B	B	C	A			B	A
Approach Delay (s)		0.0			18.0			8.7			10.3	
Approach LOS		A			B			A			B	

Intersection Summary				
HCM Average Control Delay	11.3	HCM Level of Service	B	
HCM Volume to Capacity ratio	0.46			
Actuated Cycle Length (s)	50.3	Sum of lost time (s)	12.0	
Intersection Capacity Utilization	45.1%	ICU Level of Service	A	
Analysis Period (min)	15			
c Critical Lane Group				

Existing Conditions PM
7: Friars Rd EB Ramps & Qualcomm Wy 1/15/2015

Movement	EBL	EBT	EBR	WBL	WBT	WBR	NBL	NBT	NBR	SBL	SBT	SBR
Lane Configurations												
Ideal Flow (vphpl)	1900	1900	1900	1900	1900	1900	1900	1900	1900	1900	1900	1900
Lane Width	12	11	14	12	12	12	12	12	15	12	12	12
Total Lost time (s)		4.0	4.0					4.0	4.0	4.0	4.0	
Lane Util. Factor		1.00	1.00					0.95	1.00	1.00	0.95	
Frpb, ped/bikes		1.00	1.00					1.00	1.00	1.00	1.00	
Flpb, ped/bikes		1.00	1.00					1.00	1.00	1.00	1.00	
Frt		1.00	0.85					1.00	0.85	1.00	1.00	
Flt Protected		0.96	1.00					1.00	1.00	0.95	1.00	
Satd. Flow (prot)		1724	1689					3539	1742	1770	3539	
Flt Permitted		0.96	1.00					1.00	1.00	0.95	1.00	
Satd. Flow (perm)		1724	1689					3539	1742	1770	3539	
Volume (vph)	30	4	203	0	0	0	0	396	359	19	327	0
Peak-hour factor, PHF	0.95	0.95	0.95	0.95	0.95	0.95	0.95	0.95	0.95	0.95	0.95	0.95
Adj. Flow (vph)	32	4	214	0	0	0	0	417	378	20	344	0
RTOR Reduction (vph)	0	0	183	0	0	0	0	0	120	0	0	0
Lane Group Flow (vph)	0	36	31	0	0	0	0	417	258	20	344	0
Confl. Peds. (#/hr)												
Turn Type	Split		Perm						Perm	Prot		
Protected Phases	4	4						2		1	6	
Permitted Phases			4						2			
Actuated Green, G (s)		12.1	12.1					60.4	60.4	3.1	68.1	
Effective Green, g (s)		13.0	13.0					61.5	61.5	3.5	69.0	
Actuated g/C Ratio		0.14	0.14					0.68	0.68	0.04	0.77	
Clearance Time (s)		4.9	4.9					5.1	5.1	4.4	4.9	
Vehicle Extension (s)		3.0	3.0					3.0	3.0	3.0	3.0	
Lane Grp Cap (vph)		249	244					2418	1190	69	2713	
v/s Ratio Prot		c0.02						0.12		c0.01	0.10	
v/s Ratio Perm			0.02						c0.15			
v/c Ratio		0.14	0.13					0.17	0.22	0.29	0.13	
Uniform Delay, d1		33.6	33.6					5.1	5.3	42.0	2.7	
Progression Factor		1.00	1.00					1.00	1.00	1.13	0.89	
Incremental Delay, d2		0.3	0.2					0.2	0.4	2.0	0.1	
Delay (s)		33.9	33.8					5.3	5.7	49.7	2.5	
Level of Service		C	C					A	A	D	A	
Approach Delay (s)		33.8			0.0			5.5			5.1	
Approach LOS		C			A			A			A	

Intersection Summary				
HCM Average Control Delay	10.4	HCM Level of Service	B	
HCM Volume to Capacity ratio	0.21			
Actuated Cycle Length (s)	90.0	Sum of lost time (s)	12.0	
Intersection Capacity Utilization	54.4%	ICU Level of Service	A	
Analysis Period (min)	15			
c Critical Lane Group				

Existing Conditions PM
8: Friars Rd WB Ramps & Qualcomm Wy 1/15/2015

Movement	EBL	EBT	EBR	WBL	WBT	WBR	NBL	NBT	NBR	SBL	SBT	SBR
Lane Configurations												
Ideal Flow (vphpl)	1900	1900	1900	1900	1900	1900	1900	1900	1900	1900	1900	1900
Lane Width	12	12	12	12	16	12	12	11	12	12	16	16
Total Lost time (s)				4.0	4.0		4.0	4.0			4.0	
Lane Util. Factor				0.95	0.95		1.00	1.00			0.95	
Frpb, ped/bikes				1.00	1.00		1.00	1.00			1.00	
Flpb, ped/bikes				1.00	1.00		1.00	1.00			1.00	
Frt				1.00	1.00		1.00	1.00			0.94	
Flt Protected				0.95	0.95		0.95	1.00			1.00	
Satd. Flow (prot)				1681	1913		1770	1801			3776	
Flt Permitted				0.95	0.95		0.95	1.00			1.00	
Satd. Flow (perm)				1681	1913		1770	1801			3776	
Volume (vph)	0	0	0	336	5	0	421	5	0	0	13	9
Peak-hour factor, PHF	0.95	0.95	0.95	0.95	0.95	0.95	0.95	0.95	0.95	0.95	0.95	0.95
Adj. Flow (vph)	0	0	0	354	5	0	443	5	0	0	14	9
RTOR Reduction (vph)	0	0	0	0	0	0	0	0	0	0	8	0
Lane Group Flow (vph)	0	0	0	177	182	0	443	5	0	0	15	0
Confl. Peds. (#/hr)												
Turn Type				Split			Prot					
Protected Phases				8	8		5	2			6	
Permitted Phases												
Actuated Green, G (s)				15.7	15.7		53.4	64.3			6.2	
Effective Green, g (s)				16.6	16.6		54.3	65.4			7.1	
Actuated g/C Ratio				0.18	0.18		0.60	0.73			0.08	
Clearance Time (s)				4.9	4.9		4.9	5.1			4.9	
Vehicle Extension (s)				3.0	3.0		3.0	3.0			3.0	
Lane Grp Cap (vph)				310	353		1068	1309			298	
v/s Ratio Prot				c0.11	0.10		c0.25	0.00			c0.00	
v/s Ratio Perm												
v/c Ratio				0.57	0.52		0.41	0.00			0.05	
Uniform Delay, d1				33.5	33.1		9.4	3.4			38.3	
Progression Factor				1.00	1.00		0.69	0.38			1.00	
Incremental Delay, d2				2.5	1.3		1.2	0.0			0.1	
Delay (s)				36.0	34.3		7.7	1.3			38.4	
Level of Service				D	C		A	A			D	
Approach Delay (s)		0.0			35.2			7.6			38.4	
Approach LOS		A			D			A			D	

Intersection Summary				
HCM Average Control Delay	20.4	HCM Level of Service	C	
HCM Volume to Capacity ratio	0.41			
Actuated Cycle Length (s)	90.0	Sum of lost time (s)	12.0	
Intersection Capacity Utilization	54.4%	ICU Level of Service	A	
Analysis Period (min)	15			
c Critical Lane Group				

Existing Conditions PM
10: Friars Rd & River Rd 1/15/2015

Movement	EBL	EBT	EBR	WBL	WBT	WBR	NBL	NBT	NBR	SBL	SBT	SBR
Lane Configurations												
Ideal Flow (vphpl)	1900	1900	1900	1900	1900	1900	1900	1900	1900	1900	1900	1900
Lane Width	14	12	12	10	12	12	12	11	13	12	15	10
Total Lost time (s)	4.0	4.0		4.0	4.0			4.0	4.0		4.0	
Lane Util. Factor	1.00	0.91		1.00	0.91			1.00	1.00		1.00	
Frt	1.00	0.99		1.00	1.00			1.00	0.85		0.96	
Flt Protected	0.95	1.00		0.95	1.00			0.96	1.00		0.97	
Satd. Flow (prot)	1888	5051		1652	5066			1720	1636		1900	
Flt Permitted	0.95	1.00		0.95	1.00			0.72	1.00		0.78	
Satd. Flow (perm)	1888	5051		1652	5066			1293	1636		1531	
Volume (vph)	21	1966	92	52	1158	29	30	2	113	164	7	78
Peak-hour factor, PHF	0.95	0.95	0.95	0.95	0.95	0.95	0.95	0.95	0.95	0.95	0.95	0.95
Adj. Flow (vph)	22	2069	97	55	1219	31	32	2	119	173	7	82
RTOR Reduction (vph)	0	3	0	0	2	0	0	0	93	0	14	0
Lane Group Flow (vph)	22	2163	0	55	1248	0	0	34	26	0	248	0
Turn Type	Prot			Prot			Perm		Perm	Perm		
Protected Phases	5	2		1	6			8			4	
Permitted Phases							8		8	4		
Actuated Green, G (s)	1.9	48.4		4.6	51.1			15.5	15.5		15.5	
Effective Green, g (s)	2.3	50.6		5.0	53.3			16.4	16.4		16.4	
Actuated g/C Ratio	0.03	0.60		0.06	0.63			0.20	0.20		0.20	
Clearance Time (s)	4.4	6.2		4.4	6.2			4.9	4.9		4.9	
Vehicle Extension (s)	3.0	3.0		3.0	3.0			3.0	3.0		3.0	
Lane Grp Cap (vph)	52	3043		98	3214			252	319		299	
v/s Ratio Prot	0.01	c0.43		c0.03	c0.25							
v/s Ratio Perm								0.03	0.02		c0.16	
v/c Ratio	0.42	0.71		0.56	0.39			0.13	0.08		0.83	
Uniform Delay, d1	40.2	11.6		38.4	7.4			27.9	27.6		32.4	
Progression Factor	1.00	1.00		1.00	1.00			1.00	1.00		1.00	
Incremental Delay, d2	5.5	0.8		7.2	0.1			0.2	0.1		16.9	
Delay (s)	45.7	12.4		45.6	7.5			28.2	27.7		49.4	
Level of Service	D	B		D	A			C	C		D	
Approach Delay (s)		12.7			9.1			27.8			49.4	
Approach LOS		B			A			C			D	

Intersection Summary				
HCM Average Control Delay	14.6	HCM Level of Service	B	
HCM Volume to Capacity ratio	0.76			
Actuated Cycle Length (s)	84.0	Sum of lost time (s)	16.0	
Intersection Capacity Utilization	71.2%	ICU Level of Service	C	
Analysis Period (min)	15			

c Critical Lane Group

Existing Conditions PM
11: Friars Rd & Fenton Pkwy 1/15/2015

Movement	EBL	EBT	EBR	WBL	WBT	WBR	NBL	NBT	NBR	SBL	SBT	SBR
Lane Configurations												
Ideal Flow (vphpl)	1900	1900	1900	1900	1900	1900	1900	1900	1900	1900	1900	1900
Lane Width	12	12	14	10	12	12	9	12	16	12	12	12
Total Lost time (s)	4.0	4.0	4.0	4.0	4.0	4.0	4.0	4.0	4.0	4.0	4.0	4.0
Lane Util. Factor	1.00	0.91	1.00	0.97	0.91	1.00	0.97	1.00	1.00	0.97	0.95	0.95
Frpb, ped/bikes	1.00	1.00	1.00	1.00	1.00	1.00	1.00	1.00	1.00	1.00	1.00	1.00
Flpb, ped/bikes	1.00	1.00	1.00	1.00	1.00	1.00	1.00	1.00	1.00	1.00	1.00	1.00
Frt	1.00	1.00	0.85	1.00	1.00	0.85	1.00	1.00	0.85	1.00	0.91	0.85
Flt Protected	0.95	1.00	1.00	0.95	1.00	1.00	0.95	1.00	1.00	0.95	1.00	1.00
Satd. Flow (prot)	1770	5085	1689	3204	5085	1583	3090	1863	1794	3433	1616	1504
Flt Permitted	0.95	1.00	1.00	0.95	1.00	1.00	0.95	1.00	1.00	0.95	1.00	1.00
Satd. Flow (perm)	1770	5085	1689	3204	5085	1583	3090	1863	1794	3433	1616	1504
Volume (vph)	139	1780	316	151	1039	60	201	18	277	22	10	46
Peak-hour factor, PHF	0.95	0.95	0.95	0.95	0.95	0.95	0.95	0.95	0.95	0.95	0.95	0.95
Adj. Flow (vph)	146	1874	333	159	1094	63	212	19	292	23	11	48
RTOR Reduction (vph)	0	0	104	0	0	25	0	0	214	0	14	8
Lane Group Flow (vph)	146	1874	229	159	1094	38	212	19	78	23	12	25
Confl. Peds. (#/hr)												
Turn Type	Prot		pm+ov	Prot		pm+ov	Prot		Perm	Prot		pm+ov
Protected Phases	5	2	3	1	6	7	3	8		7	4	5
Permitted Phases			2			6			8			4
Actuated Green, G (s)	14.8	73.4	83.3	10.7	69.3	72.6	9.9	17.7	17.7	3.3	11.1	25.9
Effective Green, g (s)	15.2	75.6	85.9	11.1	71.5	75.2	10.3	18.6	18.6	3.7	12.0	27.2
Actuated g/C Ratio	0.12	0.60	0.69	0.09	0.57	0.60	0.08	0.15	0.15	0.03	0.10	0.22
Clearance Time (s)	4.4	6.2	4.4	4.4	6.2	4.4	4.4	4.9	4.9	4.4	4.9	4.4
Vehicle Extension (s)	3.0	3.0	3.0	3.0	3.0	3.0	3.0	3.0	3.0	3.0	3.0	3.0
Lane Grp Cap (vph)	215	3075	1215	285	2909	1003	255	277	267	102	155	375
v/s Ratio Prot	c0.08	c0.37	0.02	0.05	0.22	0.00	c0.07	0.01		0.01	0.01	0.01
v/s Ratio Perm			0.12			0.02			c0.04			0.01
v/c Ratio	0.68	0.61	0.19	0.56	0.38	0.04	0.83	0.07	0.29	0.23	0.08	0.07
Uniform Delay, d1	52.6	15.5	7.0	54.6	14.6	10.2	56.5	45.8	47.4	59.3	51.5	38.8
Progression Factor	1.00	1.00	1.00	1.00	1.00	1.00	1.00	1.00	1.00	1.00	1.00	1.00
Incremental Delay, d2	8.2	0.9	0.1	2.4	0.4	0.0	20.0	0.1	0.6	1.1	0.2	0.1
Delay (s)	60.8	16.4	7.1	57.0	15.0	10.2	76.5	45.9	48.0	60.4	51.7	38.9
Level of Service	E	B	A	E	B	B	E	D	D	E	D	D
Approach Delay (s)		17.8			19.8			59.5			49.0	
Approach LOS		B			B			E			D	

Intersection Summary				
HCM Average Control Delay	24.1	HCM Level of Service	C	
HCM Volume to Capacity ratio	0.58			
Actuated Cycle Length (s)	125.0	Sum of lost time (s)	8.0	
Intersection Capacity Utilization	64.9%	ICU Level of Service	C	
Analysis Period (min)	15			

c Critical Lane Group

Existing Conditions PM
12: Friars Rd & Northside Dr 1/15/2015

Movement	EBL	EBT	EBR	WBL	WBT	WBR	NBL	NBT	NBR	SBL	SBT	SBR
Lane Configurations												
Ideal Flow (vphpl)	1900	1900	1900	1900	1900	1900	1900	1900	1900	1900	1900	1900
Lane Width	10	12	16	10	13	12	11	16	12	11	15	12
Total Lost time (s)	4.0	4.0	4.0	4.0	4.0	4.0	4.0	4.0	4.0	4.0	4.0	4.0
Lane Util. Factor	0.97	0.91	1.00	0.97	0.91	1.00	0.97	1.00	1.00	0.97	1.00	1.00
Frpb, ped/bikes	1.00	1.00	1.00	1.00	1.00	1.00	1.00	1.00	1.00	1.00	1.00	1.00
Flpb, ped/bikes	1.00	1.00	1.00	1.00	1.00	1.00	1.00	1.00	1.00	1.00	1.00	1.00
Frt	1.00	1.00	0.85	1.00	1.00	0.85	1.00	1.00	0.85	1.00	1.00	0.85
Flt Protected	0.95	1.00	1.00	0.95	1.00	1.00	0.95	1.00	1.00	0.95	1.00	1.00
Satd. Flow (prot)	3204	5085	1794	3204	5255	1583	3319	2111	1583	3319	2049	1583
Flt Permitted	0.95	1.00	1.00	0.95	1.00	1.00	0.95	1.00	1.00	0.95	1.00	1.00
Satd. Flow (perm)	3204	5085	1794	3204	5255	1583	3319	2111	1583	3319	2049	1583
Volume (vph)	175	1713	187	488	1016	139	183	29	672	64	19	79
Peak-hour factor, PHF	0.95	0.95	0.95	0.95	0.95	0.95	0.95	0.95	0.95	0.95	0.95	0.95
Adj. Flow (vph)	184	1803	197	514	1069	146	193	31	707	67	20	83
RTOR Reduction (vph)	0	0	101	0	0	57	0	0	3	0	0	75
Lane Group Flow (vph)	184	1803	96	514	1069	89	193	31	704	67	20	8
Confl. Peds. (#/hr)												
Turn Type	Prot		Perm	Prot		pm+ov	Prot		pm+ov	Prot		Perm
Protected Phases	5	2		1	6	7	3	8	1	7	4	
Permitted Phases			2			6			8			4
Actuated Green, G (s)	11.1	41.7	41.7	21.3	51.7	60.0	10.5	11.7	33.0	8.3	9.5	9.5
Effective Green, g (s)	11.5	43.7	43.7	21.7	53.9	62.6	10.9	12.6	34.3	8.7	10.4	10.4
Actuated g/C Ratio	0.11	0.43	0.43	0.21	0.52	0.61	0.11	0.12	0.33	0.08	0.10	0.10
Clearance Time (s)	4.4	6.0	6.0	4.4	6.2	4.4	4.4	4.9	4.4	4.4	4.9	4.9
Vehicle Extension (s)	3.0	3.0	3.0	3.0	3.0	3.0	3.0	3.0	3.0	3.0	3.0	3.0
Lane Grp Cap (vph)	359	2164	763	677	2758	1027	352	259	590	281	207	160
v/s Ratio Prot	0.06	c0.35		0.16	0.20	0.01	c0.06	0.01	c0.25	0.02	0.01	
v/s Ratio Perm			0.05			0.05			0.19			0.01
v/c Ratio	0.51	0.83	0.13	0.76	0.39	0.09	0.55	0.12	1.19	0.24	0.10	0.05
Uniform Delay, d1	43.0	26.3	17.9	38.0	14.6	8.3	43.6	40.1	34.2	43.9	41.9	41.7
Progression Factor	1.00	1.00	1.00	1.00	1.00	1.00	1.00	1.00	1.00	1.00	1.00	1.00
Incremental Delay, d2	1.2	2.9	0.1	4.9	0.1	0.0	1.7	0.2	103.1	0.4	0.2	0.1
Delay (s)	44.2	29.2	18.0	42.9	14.6	8.3	45.3	40.3	137.3	44.3	42.1	41.8
Level of Service	D	C	B	D	B	A	D	D	F	D	D	D
Approach Delay (s)		29.4			22.5			115.0			42.9	
Approach LOS		C			C			F			D	

Intersection Summary				
HCM Average Control Delay	43.4	HCM Level of Service	D	
HCM Volume to Capacity ratio	0.93			
Actuated Cycle Length (s)	102.7	Sum of lost time (s)	8.0	
Intersection Capacity Utilization	88.0%	ICU Level of Service	E	
Analysis Period (min)	15			

c Critical Lane Group

Existing Conditions PM
17: Mission Ctr Rd & Murray Ridge Rd 1/15/2015

Movement	EBL	EBT	EBR	WBL	WBT	WBR	NBL	NBT	NBR	SBL	SBT	SBR
Lane Configurations												
Ideal Flow (vphpl)	1900	1900	1900	1900	1900	1900	1900	1900	1900	1900	1900	1900
Lane Width	12	10	12	12	16	12	12	16	12	12	16	12
Total Lost time (s)		4.0	4.0		4.0		4.0	4.0		4.0	4.0	4.0
Lane Util. Factor		1.00	1.00		1.00		1.00	1.00		1.00	1.00	1.00
Frpb, ped/bikes		1.00	1.00		1.00		1.00	1.00		1.00	1.00	1.00
Flpb, ped/bikes		1.00	1.00		1.00		1.00	1.00		1.00	1.00	1.00
Frt		1.00	0.85		1.00		1.00	0.98		1.00	1.00	0.85
Flt Protected		0.96	1.00		0.97		0.95	1.00		0.95	1.00	1.00
Satd. Flow (prot)		1676	1583		2034		1770	2060		1770	2111	1583
Flt Permitted		0.96	1.00		0.97		0.95	1.00		0.95	1.00	1.00
Satd. Flow (perm)		1676	1583		2034		1770	2060		1770	2111	1583
Volume (vph)	220	73	421	100	42	4	169	435	84	14	383	149
Peak-hour factor, PHF	0.95	0.95	0.95	0.95	0.95	0.95	0.95	0.95	0.95	0.95	0.95	0.95
Adj. Flow (vph)	232	77	443	105	44	4	178	458	88	15	403	157
RTOR Reduction (vph)	0	0	312	0	1	0	0	6	0	0	0	54
Lane Group Flow (vph)	0	309	131	0	152	0	178	540	0	15	403	103
Confl. Peds. (#/hr)												
Turn Type	Split		Perm	Split			Prot			Prot		Perm
Protected Phases	4	4		3	3		5	2		1	6	
Permitted Phases			4									6
Actuated Green, G (s)		17.7	17.7		9.3		8.3	30.2		0.6	22.5	22.5
Effective Green, g (s)		19.0	19.0		10.2		8.7	31.1		1.0	23.4	23.4
Actuated g/C Ratio		0.25	0.25		0.13		0.11	0.40		0.01	0.30	0.30
Clearance Time (s)		5.3	5.3		4.9		4.4	4.9		4.4	4.9	4.9
Vehicle Extension (s)		3.5	3.5		2.0		2.0	3.9		2.0	3.9	3.9
Lane Grp Cap (vph)		412	389		268		199	829		23	639	479
v/s Ratio Prot		c0.18			c0.07		c0.10	c0.26		0.01	0.19	
v/s Ratio Perm			0.08									0.06
v/c Ratio		0.75	0.34		0.57		0.89	0.65		0.65	0.63	0.21
Uniform Delay, d1		27.0	24.0		31.5		33.8	18.7		38.0	23.2	20.1
Progression Factor		1.00	1.00		1.00		1.00	1.00		1.00	1.00	1.00
Incremental Delay, d2		7.7	0.6		1.6		35.3	2.0		40.7	2.3	0.3
Delay (s)		34.7	24.6		33.1		69.1	20.7		78.7	25.5	20.4
Level of Service		C	C		C		E	C		E	C	C
Approach Delay (s)		28.7			33.1			32.6			25.5	
Approach LOS		C			C			C			C	

Intersection Summary				
HCM Average Control Delay	29.5	HCM Level of Service	C	
HCM Volume to Capacity ratio	0.68			
Actuated Cycle Length (s)	77.3	Sum of lost time (s)	12.0	
Intersection Capacity Utilization	64.2%	ICU Level of Service	C	
Analysis Period (min)	15			

c Critical Lane Group

Existing Conditions PM
18: Civitas & Mission Center Rd 1/15/2015

Movement	EBL	EBT	EBR	WBL	WBT	WBR	NBL	NBT	NBR	SBL	SBT	SBR
Lane Configurations												
Ideal Flow (vphpl)	1900	1900	1900	1900	1900	1900	1900	1900	1900	1900	1900	1900
Lane Width	12	12	16	12	12	12	10	12	12	12	12	12
Total Lost time (s)	4.0	4.0	4.0	4.0	4.0		4.0	4.0	4.0	4.0	4.0	
Lane Util. Factor	1.00	1.00	1.00	0.97	1.00		0.97	0.95	1.00	1.00	0.95	
Frpb, ped/bikes	1.00	1.00	1.00	1.00	1.00		1.00	1.00	1.00	1.00	1.00	
Flpb, ped/bikes	1.00	1.00	1.00	1.00	1.00		1.00	1.00	1.00	1.00	1.00	
Frt	1.00	1.00	0.85	1.00	0.88		1.00	1.00	0.85	1.00	0.98	
Flt Protected	0.95	1.00	1.00	0.95	1.00		0.95	1.00	1.00	0.95	1.00	
Satd. Flow (prot)	1770	1863	1794	3433	1634		3204	3539	1583	1770	3480	
Flt Permitted	0.95	1.00	1.00	0.95	1.00		0.95	1.00	1.00	0.95	1.00	
Satd. Flow (perm)	1770	1863	1794	3433	1634		3204	3539	1583	1770	3480	
Volume (vph)	282	5	269	42	2	9	87	337	37	8	280	35
Peak-hour factor, PHF	0.95	0.95	0.95	0.95	0.95	0.95	0.95	0.95	0.95	0.95	0.95	0.95
Adj. Flow (vph)	297	5	283	44	2	9	92	355	39	8	295	37
RTOR Reduction (vph)	0	0	204	0	8	0	0	0	21	0	10	0
Lane Group Flow (vph)	297	5	79	44	3	0	92	355	18	8	322	0
Confl. Peds. (#/hr)												
Turn Type	Prot		Perm	Prot			Prot		Perm	Prot		
Protected Phases	7	4		3	8		5	2		1	6	
Permitted Phases		4	4		8			2	2		6	
Actuated Green, G (s)	17.7	19.9	19.9	2.4	4.6		17.1	32.9	32.9	0.9	16.7	
Effective Green, g (s)	18.1	20.8	20.8	2.8	5.5		17.5	33.9	33.9	1.3	17.7	
Actuated g/C Ratio	0.24	0.28	0.28	0.04	0.07		0.23	0.45	0.45	0.02	0.24	
Clearance Time (s)	4.4	4.9	4.9	4.4	4.9		4.4	5.0	5.0	4.4	5.0	
Vehicle Extension (s)	3.0	3.0	3.0	3.0	3.0		3.0	3.0	3.0	3.0	3.0	
Lane Grp Cap (vph)	428	518	499	129	120		750	1604	717	31	823	
v/s Ratio Prot	c0.17	0.00		0.01	0.00		c0.03	c0.10		0.00	c0.09	
v/s Ratio Perm			c0.04						0.01			
v/c Ratio	0.69	0.01	0.16	0.34	0.02		0.12	0.22	0.02	0.26	0.39	
Uniform Delay, d1	25.8	19.5	20.4	35.1	32.2		22.6	12.4	11.3	36.3	24.0	
Progression Factor	1.00	1.00	1.00	1.00	1.00		1.00	1.00	1.00	1.00	1.00	
Incremental Delay, d2	4.8	0.0	0.1	1.6	0.1		0.3	0.1	0.0	4.4	0.3	
Delay (s)	30.7	19.6	20.5	36.7	32.2		22.9	12.5	11.3	40.7	24.3	
Level of Service	C	B	C	D	C		C	B	B	D	C	
Approach Delay (s)		25.7			35.8			14.4			24.7	
Approach LOS		C			D			B			C	

Intersection Summary			
HCM Average Control Delay	22.1	HCM Level of Service	C
HCM Volume to Capacity ratio	0.41		
Actuated Cycle Length (s)	74.8	Sum of lost time (s)	16.0
Intersection Capacity Utilization	44.9%	ICU Level of Service	A
Analysis Period (min)	15		
c Critical Lane Group			

Existing Conditions PM
19: Mission Center Crt & Mission Center Rd 1/15/2015

Movement	EBL	EBT	EBR	WBL	WBT	WBR	NBL	NBT	NBR	SBL	SBT	SBR
Lane Configurations												
Ideal Flow (vphpl)	1900	1900	1900	1900	1900	1900	1900	1900	1900	1900	1900	1900
Lane Width	10	12	16	12	12	12	11	12	12	10	12	12
Total Lost time (s)		4.0			4.0		4.0	4.0		4.0	4.0	
Lane Util. Factor		1.00			1.00		1.00	0.95		1.00	0.95	
Frt		0.91			0.93		1.00	0.99		1.00	0.99	
Flt Protected		0.99			0.98		0.95	1.00		0.95	1.00	
Satd. Flow (prot)		1670			1693		1711	3486		1652	3503	
Flt Permitted		0.99			0.98		0.95	1.00		0.95	1.00	
Satd. Flow (perm)		1670			1693		1711	3486		1652	3503	
Volume (vph)	55	6	123	90	3	99	69	705	78	152	678	49
Peak-hour factor, PHF	0.95	0.95	0.95	0.95	0.95	0.95	0.95	0.95	0.95	0.95	0.95	0.95
Adj. Flow (vph)	58	6	129	95	3	104	73	742	82	160	714	52
RTOR Reduction (vph)	0	86	0	0	37	0	0	8	0	0	5	0
Lane Group Flow (vph)	0	107	0	0	165	0	73	816	0	160	761	0
Turn Type	Split			Split			Prot			Prot		
Protected Phases	4	4		3	3		5	2		1	6	
Permitted Phases												
Actuated Green, G (s)		9.4			9.0		4.0	23.4		7.7	27.2	
Effective Green, g (s)		9.4			9.0		4.0	24.7		7.7	28.4	
Actuated g/C Ratio		0.14			0.13		0.06	0.37		0.12	0.43	
Clearance Time (s)		4.0			4.0		4.0	5.3		4.0	5.2	
Vehicle Extension (s)		3.0			3.0		3.0	3.0		3.0	3.0	
Lane Grp Cap (vph)		235			228		102	1289		190	1489	
v/s Ratio Prot		c0.06			c0.10		0.04	c0.23		c0.10	c0.22	
v/s Ratio Perm												
v/c Ratio		0.46			0.72		0.72	0.63		0.84	0.51	
Uniform Delay, d1		26.4			27.7		30.8	17.3		29.0	14.1	
Progression Factor		1.00			1.00		1.00	1.00		1.00	1.00	
Incremental Delay, d2		1.4			10.8		21.1	1.0		27.2	0.3	
Delay (s)		27.8			38.5		52.0	18.4		56.1	14.4	
Level of Service		C			D		D	B		E	B	
Approach Delay (s)		27.8			38.5			21.1			21.6	
Approach LOS		C			D			C			C	

Intersection Summary			
HCM Average Control Delay	23.5	HCM Level of Service	C
HCM Volume to Capacity ratio	0.68		
Actuated Cycle Length (s)	66.8	Sum of lost time (s)	20.0
Intersection Capacity Utilization	58.6%	ICU Level of Service	B
Analysis Period (min)	15		
c Critical Lane Group			

Existing Conditions PM
23: I-805 NB Ramps & Murray Ridge Rd 1/15/2015

Movement	EBL	EBT	EBR	WBL	WBT	WBR	NBL	NBT	NBR	SBL	SBT	SBR
Lane Configurations												
Ideal Flow (vphpl)	1900	1900	1900	1900	1900	1900	1900	1900	1900	1900	1900	1900
Lane Width	12	12	12	16	12	16	12	16	12	12	16	11
Total Lost time (s)					4.0	4.0	4.0	4.0			4.0	
Lane Util. Factor					1.00	1.00	1.00	1.00			0.95	
Frpb, ped/bikes					1.00	1.00	1.00	1.00			1.00	
Flpb, ped/bikes					1.00	1.00	1.00	1.00			1.00	
Frt					1.00	0.85	1.00	1.00			0.95	
Flt Protected					0.95	1.00	0.95	1.00			1.00	
Satd. Flow (prot)					1770	1794	1770	2111			3805	
Flt Permitted					0.95	1.00	0.95	1.00			1.00	
Satd. Flow (perm)					1770	1794	1770	2111			3805	
Volume (vph)	0	0	0	49	0	434	41	297	0	0	592	309
Peak-hour factor, PHF	0.95	0.95	0.95	0.95	0.95	0.95	0.95	0.95	0.95	0.95	0.95	0.95
Adj. Flow (vph)	0	0	0	52	0	457	43	313	0	0	623	325
RTOR Reduction (vph)	0	0	0	0	0	352	0	0	0	0	70	0
Lane Group Flow (vph)	0	0	0	0	52	105	43	313	0	0	878	0
Confl. Peds. (#/hr)												
Turn Type				Perm		Perm	Prot					
Protected Phases					6		3	8			4	
Permitted Phases				6		6						
Actuated Green, G (s)					8.7	8.7	2.2	22.4			15.7	
Effective Green, g (s)					9.2	9.2	2.7	22.9			16.2	
Actuated g/C Ratio					0.23	0.23	0.07	0.57			0.40	
Clearance Time (s)					4.5	4.5	4.5	4.5			4.5	
Vehicle Extension (s)					3.0	3.0	3.0	3.0			3.0	
Lane Grp Cap (vph)					406	412	119	1206			1537	
v/s Ratio Prot							0.02	c0.15			c0.23	
v/s Ratio Perm					0.03	c0.06						
v/c Ratio					0.13	0.25	0.36	0.26			0.57	
Uniform Delay, d1					12.3	12.6	17.9	4.3			9.3	
Progression Factor					1.00	1.00	1.00	1.00			1.00	
Incremental Delay, d2					0.1	0.3	1.9	0.1			0.5	
Delay (s)					12.4	13.0	19.7	4.4			9.8	
Level of Service					B	B	B	A			A	
Approach Delay (s)		0.0			12.9			6.3			9.8	
Approach LOS		A			B			A			A	

Intersection Summary			
HCM Average Control Delay	10.0	HCM Level of Service	A
HCM Volume to Capacity ratio	0.45		
Actuated Cycle Length (s)	40.1	Sum of lost time (s)	12.0
Intersection Capacity Utilization	62.1%	ICU Level of Service	B
Analysis Period (min)	15		
c Critical Lane Group			

Existing Conditions PM
24: I-805 SB Ramps & Murray Ridge Rd 1/15/2015

Movement	EBL	EBT	EBR	WBL	WBT	WBR	NBL	NBT	NBR	SBL	SBT	SBR
Lane Configurations												
Ideal Flow (vphpl)	1900	1900	1900	1900	1900	1900	1900	1900	1900	1900	1900	1900
Lane Width	12	14	12	12	12	12	12	16	12	12	15	12
Total Lost time (s)		4.0	4.0					4.0		4.0	4.0	
Lane Util. Factor		1.00	1.00					1.00		1.00	1.00	
Frpb, ped/bikes		1.00	1.00					1.00		1.00	1.00	
Flpb, ped/bikes		1.00	1.00					1.00		1.00	1.00	
Frt		1.00	0.85					0.95		1.00	1.00	
Flt Protected		0.95	1.00					1.00		0.95	1.00	
Satd. Flow (prot)		1888	1583					2004		1770	2049	
Flt Permitted		0.95	1.00					1.00		0.95	1.00	
Satd. Flow (perm)		1888	1583					2004		1770	2049	
Volume (vph)	319	0	31	0	0	0	0	43	26	552	77	0
Peak-hour factor, PHF	0.95	0.95	0.95	0.95	0.95	0.95	0.95	0.95	0.95	0.95	0.95	0.95
Adj. Flow (vph)	336	0	33	0	0	0	0	45	27	581	81	0
RTOR Reduction (vph)	0	0	24	0	0	0	0	24	0	0	0	0
Lane Group Flow (vph)	0	336	9	0	0	0	0	48	0	581	81	0
Confl. Peds. (#/hr)												
Turn Type	Perm		Perm							Prot		
Protected Phases		4						2		1	6	
Permitted Phases	4		4									
Actuated Green, G (s)		15.4	15.4					4.8		24.8	33.8	
Effective Green, g (s)		16.4	16.4					6.1		25.0	35.1	
Actuated g/C Ratio		0.28	0.28					0.10		0.42	0.59	
Clearance Time (s)		5.0	5.0					5.3		4.2	5.3	
Vehicle Extension (s)		3.0	3.0					3.0		3.0	3.0	
Lane Grp Cap (vph)		520	436					205		744	1209	
v/s Ratio Prot								c0.02		c0.33	0.04	
v/s Ratio Perm		0.18	0.01									
v/c Ratio		0.65	0.02					0.23		0.78	0.07	
Uniform Delay, d1		19.0	15.7					24.5		14.9	5.2	
Progression Factor		1.00	1.00					1.00		1.00	1.00	
Incremental Delay, d2		2.8	0.0					0.6		5.3	0.0	
Delay (s)		21.8	15.7					25.1		20.2	5.2	
Level of Service		C	B					C		C	A	
Approach Delay (s)		21.2			0.0			25.1			18.4	
Approach LOS		C			A			C			B	

Intersection Summary			
HCM Average Control Delay	19.8	HCM Level of Service	B
HCM Volume to Capacity ratio	0.66		
Actuated Cycle Length (s)	59.5	Sum of lost time (s)	12.0
Intersection Capacity Utilization	62.1%	ICU Level of Service	B
Analysis Period (min)	15		
c Critical Lane Group			

Movement	EBL	EBT	EBR	WBL	WBT	WBR	NBL	NBT	NBR	SBL	SBT	SBR
Lane Configurations												
Ideal Flow (vphpl)	1900	1900	1900	1900	1900	1900	1900	1900	1900	1900	1900	1900
Lane Width	12	12	14	12	12	12	10	12	12	12	12	12
Total Lost time (s)	4.0	4.0	4.0	4.0	4.0	4.0	4.0	4.0		4.0	4.0	
Lane Util. Factor	0.97	1.00	1.00	0.97	0.95	1.00	0.97	0.91		0.97	0.91	
Frpb, ped/bikes	1.00	1.00	1.00	1.00	1.00	1.00	1.00	1.00		1.00	1.00	
Flpb, ped/bikes	1.00	1.00	1.00	1.00	1.00	1.00	1.00	1.00		1.00	1.00	
Frt	1.00	1.00	0.85	1.00	1.00	0.85	1.00	0.92		1.00	0.96	
Flt Protected	0.95	1.00	1.00	0.95	1.00	1.00	0.95	1.00		0.95	1.00	
Satd. Flow (prot)	3433	1863	1689	3433	3539	1583	3204	4691		3433	4876	
Flt Permitted	0.95	1.00	1.00	0.68	1.00	1.00	0.95	1.00		0.36	1.00	
Satd. Flow (perm)	3433	1863	1689	2466	3539	1583	3204	4691		1306	4876	
Volume (vph)	195	110	273	613	197	218	239	336	360	33	379	143
Peak-hour factor, PHF	0.95	0.95	0.95	0.95	0.95	0.95	0.95	0.95	0.95	0.95	0.95	0.95
Adj. Flow (vph)	205	116	287	645	207	229	252	354	379	35	399	151
RTOR Reduction (vph)	0	0	118	0	0	147	0	202	0	0	87	0
Lane Group Flow (vph)	205	116	169	645	207	82	252	531	0	35	463	0
Confl. Peds. (#/hr)												
Turn Type	Prot		pm+ov	Perm		Perm	Prot			Perm		
Protected Phases	5	2	3		6		3	8			4	
Permitted Phases			2	6		6				4		
Actuated Green, G (s)	4.9	32.6	38.5	23.4	23.4	23.4	5.9	24.8		14.5	14.5	
Effective Green, g (s)	5.3	33.7	40.0	24.4	24.4	24.4	6.3	26.1		15.8	15.8	
Actuated g/C Ratio	0.08	0.50	0.59	0.36	0.36	0.36	0.09	0.38		0.23	0.23	
Clearance Time (s)	4.4	5.1	4.4	5.0	5.0	5.0	4.4	5.3		5.3	5.3	
Vehicle Extension (s)	3.0	3.0	3.0	3.0	3.0	3.0	3.0	3.0		3.0	3.0	
Lane Grp Cap (vph)	268	926	1096	887	1274	570	298	1806		304	1136	
v/s Ratio Prot	c0.06	0.06	0.01		0.06		c0.08	0.11			c0.10	
v/s Ratio Perm			0.09	c0.26		0.05				0.03		
v/c Ratio	0.76	0.13	0.15	0.73	0.16	0.14	0.85	0.29		0.12	0.41	
Uniform Delay, d1	30.6	9.1	6.3	18.8	14.8	14.7	30.3	14.5		20.5	22.0	
Progression Factor	1.00	1.00	1.00	1.00	1.00	1.00	1.00	1.00		1.00	1.00	
Incremental Delay, d2	12.2	0.1	0.1	3.0	0.1	0.1	19.3	0.1		0.2	0.2	
Delay (s)	42.9	9.2	6.3	21.8	14.8	14.8	49.5	14.6		20.7	22.3	
Level of Service	D	A	A	C	B	B	D	B		C	C	
Approach Delay (s)		19.2			19.0			23.5			22.2	
Approach LOS		B			B			C			C	

Intersection Summary			
HCM Average Control Delay	21.0	HCM Level of Service	C
HCM Volume to Capacity ratio	0.65		
Actuated Cycle Length (s)	67.8	Sum of lost time (s)	16.0
Intersection Capacity Utilization	54.9%	ICU Level of Service	A
Analysis Period (min)	15		

c Critical Lane Group

Movement	EBL	EBT	EBR	WBL	WBT	WBR	NBL	NBT	NBR	SBL	SBT	SBR
Lane Configurations												
Ideal Flow (vphpl)	1900	1900	1900	1900	1900	1900	1900	1900	1900	1900	1900	1900
Total Lost time (s)	4.0	4.0		4.0	4.0			4.0		4.0	4.0	
Lane Util. Factor	1.00	0.95		1.00	0.95			1.00		1.00	1.00	
Frt	1.00	1.00		1.00	1.00			0.98		1.00	0.85	
Flt Protected	0.95	1.00		0.95	1.00			0.97		0.95	1.00	
Satd. Flow (prot)	1770	3525		1770	3524			1759		1770	1588	
Flt Permitted	0.36	1.00		0.44	1.00			0.75		0.66	1.00	
Satd. Flow (perm)	675	3525		817	3524			1366		1222	1588	
Volume (vph)	41	441	12	6	559	16	111	26	30	43	2	108
Peak-hour factor, PHF	0.95	0.95	0.95	0.95	0.95	0.95	0.95	0.95	0.95	0.95	0.95	0.95
Adj. Flow (vph)	43	464	13	6	588	17	117	27	32	45	2	114
RTOR Reduction (vph)	0	2	0	0	2	0	0	9	0	0	64	0
Lane Group Flow (vph)	43	475	0	6	603	0	0	167	0	45	52	0
Turn Type	Perm			Perm			Perm			Perm		
Protected Phases		4			8			2			6	
Permitted Phases	4			8			2			6		
Actuated Green, G (s)	42.3	42.3		42.3	42.3			38.7		38.7	38.7	
Effective Green, g (s)	42.8	42.8		42.8	42.8			39.2		39.2	39.2	
Actuated g/C Ratio	0.48	0.48		0.48	0.48			0.44		0.44	0.44	
Clearance Time (s)	4.5	4.5		4.5	4.5			4.5		4.5	4.5	
Lane Grp Cap (vph)	321	1676		389	1676			595		532	692	
v/s Ratio Prot		0.13			c0.17						0.03	
v/s Ratio Perm	0.06			0.01				c0.12		0.04		
v/c Ratio	0.13	0.28		0.02	0.36			0.28		0.08	0.07	
Uniform Delay, d1	13.2	14.3		12.5	14.9			16.3		14.9	14.8	
Progression Factor	1.00	1.00		1.00	1.00			1.00		1.00	1.00	
Incremental Delay, d2	0.9	0.4		0.1	0.6			1.2		0.3	0.2	
Delay (s)	14.1	14.7		12.5	15.5			17.5		15.2	15.0	
Level of Service	B	B		B	B			B		B	B	
Approach Delay (s)		14.7			15.5			17.5			15.1	
Approach LOS		B			B			B			B	

Intersection Summary			
HCM Average Control Delay	15.4	HCM Level of Service	B
HCM Volume to Capacity ratio	0.32		
Actuated Cycle Length (s)	90.0	Sum of lost time (s)	8.0
Intersection Capacity Utilization	45.3%	ICU Level of Service	A
Analysis Period (min)	15		

c Critical Lane Group

Movement	EBL	EBT	EBR	WBL	WBT	WBR	NBL	NBT	NBR	SBL	SBT	SBR
Lane Configurations												
Ideal Flow (vphpl)	1900	1900	1900	1900	1900	1900	1900	1900	1900	1900	1900	1900
Total Lost time (s)		4.0	4.0	4.0	4.0		4.0	4.0	4.0	4.0	4.0	
Lane Util. Factor		1.00	1.00	1.00	1.00		0.97	0.91	1.00	1.00	0.95	
Frt		1.00	0.85	1.00	0.94		1.00	1.00	0.85	1.00	0.99	
Flt Protected		0.96	1.00	0.95	1.00		0.95	1.00	1.00	0.95	1.00	
Satd. Flow (prot)		1787	1583	1770	1746		3433	5085	1583	1770	3493	
Flt Permitted		0.79	1.00	0.70	1.00		0.36	1.00	1.00	0.46	1.00	
Satd. Flow (perm)		1475	1583	1308	1746		1295	5085	1583	852	3493	
Volume (vph)	67	12	301	33	7	5	271	449	57	6	534	51
Peak-hour factor, PHF	0.95	0.95	0.95	0.95	0.95	0.95	0.95	0.95	0.95	0.95	0.95	0.95
Adj. Flow (vph)	71	13	317	35	7	5	285	473	60	6	562	54
RTOR Reduction (vph)	0	0	145	0	3	0	0	0	30	0	7	0
Lane Group Flow (vph)	0	84	172	35	9	0	285	473	30	6	609	0
Turn Type	Perm		Perm	Perm			Perm		Perm	Perm		
Protected Phases		4			8			2			6	
Permitted Phases	4		4	8			2		2	6		
Actuated Green, G (s)		44.0	44.0	44.0	44.0		52.0	52.0	52.0	52.0	52.0	
Effective Green, g (s)		44.5	44.5	44.5	44.5		52.5	52.5	52.5	52.5	52.5	
Actuated g/C Ratio		0.42	0.42	0.42	0.42		0.50	0.50	0.50	0.50	0.50	
Clearance Time (s)		4.5	4.5	4.5	4.5		4.5	4.5	4.5	4.5	4.5	
Lane Grp Cap (vph)		625	671	554	740		648	2543	792	426	1747	
v/s Ratio Prot					0.01			0.09			0.17	
v/s Ratio Perm		0.06	c0.11	0.03			c0.22		0.02	0.01		
v/c Ratio		0.13	0.26	0.06	0.01		0.44	0.19	0.04	0.01	0.35	
Uniform Delay, d1		18.5	19.6	17.9	17.5		16.8	14.5	13.4	13.2	15.9	
Progression Factor		1.00	1.00	1.00	1.00		1.00	1.00	1.00	1.00	1.00	
Incremental Delay, d2		0.4	0.9	0.2	0.0		2.2	0.2	0.1	0.1	0.6	
Delay (s)		18.9	20.5	18.1	17.6		19.0	14.6	13.5	13.3	16.4	
Level of Service		B	C	B	B		B	B	B	B	B	
Approach Delay (s)		20.1			18.0			16.1			16.4	
Approach LOS		C			B			B			B	

Intersection Summary			
HCM Average Control Delay	17.1	HCM Level of Service	B
HCM Volume to Capacity ratio	0.36		
Actuated Cycle Length (s)	105.0	Sum of lost time (s)	8.0
Intersection Capacity Utilization	48.4%	ICU Level of Service	A
Analysis Period (min)	15		

c Critical Lane Group

Movement	EBL	EBT	EBR	WBL	WBT	WBR	NBL	NBT	NBR	SBL	SBT	SBR
Lane Configurations												
Ideal Flow (vphpl)	1900	1900	1900	1900	1900	1900	1900	1900	1900	1900	1900	1900
Total Lost time (s)		4.0		4.0	4.0		4.0	4.0	4.0	4.0	4.0	
Lane Util. Factor		1.00		0.95	0.95		1.00	0.95	1.00	1.00	0.95	
Frt		0.93		1.00	0.85		1.00	1.00	0.85	1.00	0.99	
Flt Protected		0.98		0.95	1.00		0.95	1.00	1.00	0.95	1.00	
Satd. Flow (prot)		1693		1681	1504		1770	3539	1583	1770	3495	
Flt Permitted		0.91		0.72	1.00		0.49	1.00	1.00	0.37	1.00	
Satd. Flow (perm)		1571		1281	1504		910	3539	1583	696	3495	
Volume (vph)	24	0	25	9	0	3	20	559	43	16	347	31
Peak-hour factor, PHF	0.95	0.95	0.95	0.95	0.95	0.95	0.95	0.95	0.95	0.95	0.95	0.95
Adj. Flow (vph)	25	0	26	9	0	3	21	588	45	17	365	33
RTOR Reduction (vph)	0	15	0	0	2	0	0	0	23	0	7	0
Lane Group Flow (vph)	0	36	0	9	1	0	21	588	23	17	392	0
Turn Type	Perm			Perm			Perm		Perm	Perm		
Protected Phases		4			8			2			6	
Permitted Phases	4			8			2		2	6		
Actuated Green, G (s)		44.0		44.0	44.0		52.0	52.0	52.0	52.0	52.0	
Effective Green, g (s)		44.5		44.5	44.5		52.5	52.5	52.5	52.5	52.5	
Actuated g/C Ratio		0.42		0.42	0.42		0.50	0.50	0.50	0.50	0.50	
Clearance Time (s)		4.5		4.5	4.5		4.5	4.5	4.5	4.5	4.5	
Lane Grp Cap (vph)		666		543	637		455	1770	792	348	1748	
v/s Ratio Prot								c0.17			0.11	
v/s Ratio Perm		c0.02		0.01	0.00		0.02		0.01	0.02		
v/c Ratio		0.05		0.02	0.00		0.05	0.33	0.03	0.05	0.22	
Uniform Delay, d1		17.8		17.6	17.4		13.4	15.7	13.3	13.5	14.8	
Progression Factor		1.00		1.00	1.00		1.00	1.00	1.00	1.00	1.00	
Incremental Delay, d2		0.2		0.1	0.0		0.2	0.5	0.1	0.3	0.3	
Delay (s)		18.0		17.6	17.5		13.6	16.2	13.4	13.7	15.1	
Level of Service		B		B	B		B	B	B	B	B	
Approach Delay (s)		18.0			17.6			16.0			15.0	
Approach LOS		B			B			B			B	

Intersection Summary			
HCM Average Control Delay	15.7	HCM Level of Service	B
HCM Volume to Capacity ratio	0.20		
Actuated Cycle Length (s)	105.0	Sum of lost time (s)	8.0
Intersection Capacity Utilization	32.8%	ICU Level of Service	A
Analysis Period (min)	15		

c Critical Lane Group

Existing Conditions PM
57: Pinecrest & Murray Ridge Rd 1/15/2015

Movement	EBL	EBT	EBR	WBL	WBT	WBR	NBL	NBT	NBR	SBL	SBT	SBR
Lane Configurations												
Ideal Flow (vphpl)	1900	1900	1900	1900	1900	1900	1900	1900	1900	1900	1900	1900
Total Lost time (s)		4.0			4.0		4.0	4.0		4.0	4.0	
Lane Util. Factor		1.00			1.00		1.00	1.00		1.00	1.00	
Frt		0.88			0.99		1.00	0.99		1.00	1.00	
Flt Protected		1.00			0.96		0.95	1.00		0.95	1.00	
Satd. Flow (prot)		1635			1766		1770	1848		1770	1861	
Flt Permitted		0.99			0.76		0.36	1.00		0.35	1.00	
Satd. Flow (perm)		1617			1404		673	1848		659	1861	
Volume (vph)	9	5	97	44	4	5	41	481	28	10	496	3
Peak-hour factor, PHF	0.95	0.95	0.95	0.95	0.95	0.95	0.95	0.95	0.95	0.95	0.95	0.95
Adj. Flow (vph)	9	5	102	46	4	5	43	506	29	11	522	3
RTOR Reduction (vph)	0	67	0	0	3	0	0	2	0	0	0	0
Lane Group Flow (vph)	0	49	0	0	52	0	43	533	0	11	525	0
Turn Type	Perm			Perm			Perm			Perm		
Protected Phases		4			8			2			6	
Permitted Phases	4			8			2			6		
Actuated Green, G (s)		30.0			30.0		51.0	51.0		51.0	51.0	
Effective Green, g (s)		30.5			30.5		51.5	51.5		51.5	51.5	
Actuated g/C Ratio		0.34			0.34		0.57	0.57		0.57	0.57	
Clearance Time (s)		4.5			4.5		4.5	4.5		4.5	4.5	
Lane Grp Cap (vph)		548			476		385	1057		377	1065	
v/s Ratio Prot								c0.29			0.28	
v/s Ratio Perm		0.03			c0.04		0.06			0.02		
v/c Ratio		0.09			0.11		0.11	0.50		0.03	0.49	
Uniform Delay, d1		20.3			20.4		8.8	11.6		8.4	11.5	
Progression Factor		1.00			1.00		1.00	1.00		1.00	1.00	
Incremental Delay, d2		0.3			0.5		0.6	1.7		0.1	1.6	
Delay (s)		20.6			20.9		9.4	13.3		8.5	13.1	
Level of Service		C			C		A	B		A	B	
Approach Delay (s)		20.6			20.9			13.0			13.0	
Approach LOS		C			C			B			B	

Intersection Summary			
HCM Average Control Delay	14.0	HCM Level of Service	B
HCM Volume to Capacity ratio	0.36		
Actuated Cycle Length (s)	90.0	Sum of lost time (s)	8.0
Intersection Capacity Utilization	50.0%	ICU Level of Service	A
Analysis Period (min)	15		

c Critical Lane Group

Existing Conditions PM
58: Murray Ridge Rd Ave & Sandrock Rd 1/15/2015

Movement	EBL	EBT	EBR	WBL	WBT	WBR	NBL	NBT	NBR	SBL	SBT	SBR
Lane Configurations												
Ideal Flow (vphpl)	1900	1900	1900	1900	1900	1900	1900	1900	1900	1900	1900	1900
Total Lost time (s)	4.0	4.0	4.0		4.0		4.0	4.0		4.0	4.0	
Lane Util. Factor	1.00	1.00	1.00		1.00		1.00	1.00		1.00	1.00	
Frt	1.00	1.00	0.85		0.96		1.00	0.98		1.00	0.93	
Flt Protected	0.95	1.00	1.00		0.99		0.95	1.00		0.95	1.00	
Satd. Flow (prot)	1770	1863	1583		1781		1770	1831		1770	1739	
Flt Permitted	0.59	1.00	1.00		0.96		0.22	1.00		0.63	1.00	
Satd. Flow (perm)	1099	1863	1583		1719		409	1831		1171	1739	
Volume (vph)	160	95	96	21	89	42	59	170	22	69	424	335
Peak-hour factor, PHF	0.95	0.95	0.95	0.95	0.95	0.95	0.95	0.95	0.95	0.95	0.95	0.95
Adj. Flow (vph)	168	100	101	22	94	44	62	179	23	73	446	353
RTOR Reduction (vph)	0	0	73	0	15	0	0	5	0	0	32	0
Lane Group Flow (vph)	168	100	28	0	145	0	62	197	0	73	767	0
Turn Type	Perm		Perm	Perm			Perm			Perm		
Protected Phases		4			8			2			6	
Permitted Phases	4		4	8			2			6		
Actuated Green, G (s)	24.7	24.7	24.7		24.7		56.3	56.3		56.3	56.3	
Effective Green, g (s)	25.2	25.2	25.2		25.2		56.8	56.8		56.8	56.8	
Actuated g/C Ratio	0.28	0.28	0.28		0.28		0.63	0.63		0.63	0.63	
Clearance Time (s)	4.5	4.5	4.5		4.5		4.5	4.5		4.5	4.5	
Lane Grp Cap (vph)	308	522	443		481		258	1156		739	1098	
v/s Ratio Prot		0.05						0.11			c0.44	
v/s Ratio Perm	c0.15		0.02		0.08		0.15			0.06		
v/c Ratio	0.55	0.19	0.06		0.30		0.24	0.17		0.10	0.70	
Uniform Delay, d1	27.5	24.7	23.8		25.5		7.2	6.9		6.5	11.0	
Progression Factor	1.00	1.00	1.00		1.00		1.00	1.00		1.00	1.00	
Incremental Delay, d2	6.8	0.8	0.3		1.6		2.2	0.3		0.3	3.7	
Delay (s)	34.3	25.5	24.0		27.1		9.4	7.2		6.8	14.7	
Level of Service	C	C	C		C		A	A		A	B	
Approach Delay (s)		29.1			27.1			7.7			14.0	
Approach LOS		C			C			A			B	

Intersection Summary			
HCM Average Control Delay	17.6	HCM Level of Service	B
HCM Volume to Capacity ratio	0.65		
Actuated Cycle Length (s)	90.0	Sum of lost time (s)	8.0
Intersection Capacity Utilization	76.7%	ICU Level of Service	D
Analysis Period (min)	15		

c Critical Lane Group

Existing Conditions PM
59: Aero Dr & Sandrock Rd 1/15/2015

Movement	EBL	EBT	EBR	WBL	WBT	WBR	NBL	NBT	NBR	SBL	SBT	SBR
Lane Configurations												
Ideal Flow (vphpl)	1900	1900	1900	1900	1900	1900	1900	1900	1900	1900	1900	1900
Total Lost time (s)	4.0	4.0	4.0	4.0	4.0		4.0	4.0	4.0	4.0	4.0	
Lane Util. Factor	1.00	0.95	1.00	1.00	0.95		0.95	0.95	1.00	1.00	1.00	
Frt	1.00	1.00	0.85	1.00	1.00		1.00	1.00	0.85	1.00	0.95	
Flt Protected	0.95	1.00	1.00	0.95	1.00		0.95	0.96	1.00	0.95	1.00	
Satd. Flow (prot)	1770	3539	1583	1770	3523		1681	1695	1583	1770	1763	
Flt Permitted	0.38	1.00	1.00	0.36	1.00		0.70	0.69	1.00	0.66	1.00	
Satd. Flow (perm)	711	3539	1583	671	3523		1231	1215	1583	1229	1763	
Volume (vph)	24	677	479	224	618	19	242	17	146	47	58	32
Peak-hour factor, PHF	0.95	0.95	0.95	0.95	0.95	0.95	0.95	0.95	0.95	0.95	0.95	0.95
Adj. Flow (vph)	25	713	504	236	651	20	255	18	154	49	61	34
RTOR Reduction (vph)	0	0	232	0	3	0	0	0	111	0	22	0
Lane Group Flow (vph)	25	713	272	236	668	0	128	145	43	49	73	0
Turn Type	Perm		Perm	Perm			Perm		Perm	Perm		
Protected Phases		4			8			2			6	
Permitted Phases	4		4	8			2		2	6		
Actuated Green, G (s)	22.9	22.9	22.9	22.9	22.9		11.5	11.5	11.5	11.5	11.5	
Effective Green, g (s)	23.4	23.4	23.4	23.4	23.4		12.0	12.0	12.0	12.0	12.0	
Actuated g/C Ratio	0.54	0.54	0.54	0.54	0.54		0.28	0.28	0.28	0.28	0.28	
Clearance Time (s)	4.5	4.5	4.5	4.5	4.5		4.5	4.5	4.5	4.5	4.5	
Vehicle Extension (s)	3.0	3.0	3.0	3.0	3.0		3.0	3.0	3.0	3.0	3.0	
Lane Grp Cap (vph)	383	1908	854	362	1899		340	336	438	340	487	
v/s Ratio Prot		0.20			0.19						0.04	
v/s Ratio Perm	0.04		0.17	c0.35			0.10	c0.12	0.03	0.04		
v/c Ratio	0.07	0.37	0.32	0.65	0.35		0.38	0.43	0.10	0.14	0.15	
Uniform Delay, d1	4.8	5.8	5.6	7.1	5.7		12.7	12.9	11.7	11.8	11.9	
Progression Factor	1.00	1.00	1.00	1.00	1.00		1.00	1.00	1.00	1.00	1.00	
Incremental Delay, d2	0.1	0.1	0.2	4.2	0.1		0.7	0.9	0.1	0.2	0.1	
Delay (s)	4.8	5.9	5.8	11.3	5.8		13.4	13.8	11.8	12.0	12.0	
Level of Service	A	A	A	B	A		B	B	B	B	B	
Approach Delay (s)		5.8			7.2			12.9			12.0	
Approach LOS		A			A			B			B	

Intersection Summary			
HCM Average Control Delay	7.7	HCM Level of Service	A
HCM Volume to Capacity ratio	0.58		
Actuated Cycle Length (s)	43.4	Sum of lost time (s)	8.0
Intersection Capacity Utilization	57.1%	ICU Level of Service	B
Analysis Period (min)	15		

c Critical Lane Group

APPENDIX F

PEAK HOUR INTERSECTION AND ARTERIAL ANALYSIS WORKSHEETS
OPENING DAY (2017) WITHOUT CONNECTION CONDITIONS

2017 W/O Project AM
4: Friars Rd EB Ramps & Mission Center Rd 1/16/2015

Movement	EBL	EBT	EBR	WBL	WBT	WBR	NBL	NBT	NBR	SBL	SBT	SBR
Lane Configurations												
Ideal Flow (vphpl)	1900	1900	1900	1900	1900	1900	1900	1900	1900	1900	1900	1900
Lane Width	14	12	13	12	12	12	12	13	12	15	16	12
Total Lost time (s)	4.0	4.0	4.0					4.0		4.0	4.0	
Lane Util. Factor	0.95	0.95	1.00					0.95		0.97	0.95	
Frpb, ped/bikes	1.00	1.00	1.00					1.00		1.00	1.00	
Flpb, ped/bikes	1.00	1.00	1.00					1.00		1.00	1.00	
Frt	1.00	1.00	0.85					0.98		1.00	1.00	
Flt Protected	0.95	0.95	1.00					1.00		0.95	1.00	
Satd. Flow (prot)	1793	1681	1636					3586		3776	4011	
Flt Permitted	0.95	0.95	1.00					1.00		0.95	1.00	
Satd. Flow (perm)	1793	1681	1636					3586		3776	4011	
Volume (vph)	346	0	161	0	0	0	0	467	69	325	529	0
Peak-hour factor, PHF	0.95	0.95	0.95	0.95	0.95	0.95	0.95	0.95	0.95	0.95	0.95	0.95
Adj. Flow (vph)	364	0	169	0	0	0	0	492	73	342	557	0
RTOR Reduction (vph)	0	0	130	0	0	0	0	14	0	0	0	0
Lane Group Flow (vph)	183	181	39	0	0	0	0	551	0	342	557	0
Confl. Peds. (#/hr)												
Turn Type	Split		Perm							Prot		
Protected Phases	4	4						2		1	6	
Permitted Phases			4									
Actuated Green, G (s)	8.3	8.3	8.3					9.7		7.2	20.7	
Effective Green, g (s)	9.2	9.2	9.2					10.7		7.6	22.3	
Actuated g/C Ratio	0.23	0.23	0.23					0.27		0.19	0.56	
Clearance Time (s)	4.9	4.9	4.9					5.0		4.4	5.6	
Vehicle Extension (s)	3.0	3.0	3.0					3.0		3.0	3.0	
Lane Grp Cap (vph)	418	392	381					971		727	2264	
v/s Ratio Prot	0.10	c0.11						c0.15		c0.09	0.14	
v/s Ratio Perm			0.02									
v/c Ratio	0.44	0.46	0.10					0.57		0.47	0.25	
Uniform Delay, d1	12.9	13.0	11.9					12.4		14.2	4.3	
Progression Factor	1.00	1.00	1.00					1.00		1.00	1.00	
Incremental Delay, d2	0.7	0.9	0.1					0.8		0.5	0.1	
Delay (s)	13.7	13.9	12.0					13.2		14.6	4.4	
Level of Service	B	B	B					B		B	A	
Approach Delay (s)		13.2			0.0			13.2			8.3	
Approach LOS		B			A			B			A	

Intersection Summary				
HCM Average Control Delay	11.0	HCM Level of Service	B	
HCM Volume to Capacity ratio	0.51			
Actuated Cycle Length (s)	39.5	Sum of lost time (s)	12.0	
Intersection Capacity Utilization	44.0%	ICU Level of Service	A	
Analysis Period (min)	15			
c Critical Lane Group				

2017 W/O Project AM
5: Friars Rd WB Ramps & Mission Center Rd 1/16/2015

Movement	EBL	EBT	EBR	WBL	WBT	WBR	NBL	NBT	NBR	SBL	SBT	SBR
Lane Configurations												
Ideal Flow (vphpl)	1900	1900	1900	1900	1900	1900	1900	1900	1900	1900	1900	1900
Lane Width	12	12	12	15	12	15	10	12	12	12	14	11
Total Lost time (s)				4.0	4.0	4.0	4.0	4.0			4.0	4.0
Lane Util. Factor				0.95	0.95	1.00	0.97	0.95			0.95	1.00
Frpb, ped/bikes				1.00	1.00	1.00	1.00	1.00			1.00	1.00
Flpb, ped/bikes				1.00	1.00	1.00	1.00	1.00			1.00	1.00
Frt				1.00	1.00	0.85	1.00	1.00			1.00	0.85
Flt Protected				0.95	0.95	1.00	0.95	1.00			1.00	1.00
Satd. Flow (prot)				1849	1681	1742	3204	3539			3775	1531
Flt Permitted				0.95	0.95	1.00	0.95	1.00			1.00	1.00
Satd. Flow (perm)				1849	1681	1742	3204	3539			3775	1531
Volume (vph)	0	0	0	221	0	254	127	707	0	0	626	235
Peak-hour factor, PHF	0.95	0.95	0.95	0.95	0.95	0.95	0.95	0.95	0.95	0.95	0.95	0.95
Adj. Flow (vph)	0	0	0	233	0	267	134	744	0	0	659	247
RTOR Reduction (vph)	0	0	0	0	0	128	0	0	0	0	0	148
Lane Group Flow (vph)	0	0	0	119	114	139	134	744	0	0	659	99
Confl. Peds. (#/hr)												
Turn Type				Split		Perm	Prot					Perm
Protected Phases				8	8		5	2			6	
Permitted Phases						8						6
Actuated Green, G (s)				8.7	8.7	8.7	5.7	27.7			16.6	16.6
Effective Green, g (s)				9.6	9.6	9.6	6.1	28.7			18.6	18.6
Actuated g/C Ratio				0.21	0.21	0.21	0.13	0.62			0.40	0.40
Clearance Time (s)				4.9	4.9	4.9	4.4	5.0			6.0	6.0
Vehicle Extension (s)				3.0	3.0	3.0	3.0	3.0			3.0	3.0
Lane Grp Cap (vph)				383	349	361	422	2194			1517	615
v/s Ratio Prot				0.06	0.07		0.04	c0.21			c0.17	
v/s Ratio Perm						c0.08						0.06
v/c Ratio				0.31	0.33	0.38	0.32	0.34			0.43	0.16
Uniform Delay, d1				15.5	15.6	15.8	18.2	4.2			10.0	8.9
Progression Factor				1.00	1.00	1.00	1.00	1.00			1.00	1.00
Incremental Delay, d2				0.5	0.5	0.7	0.4	0.1			0.2	0.1
Delay (s)				16.0	16.2	16.5	18.6	4.3			10.2	9.0
Level of Service				B	B	B	B	A			B	A
Approach Delay (s)		0.0			16.3			6.5			9.9	
Approach LOS		A			B			A			A	

Intersection Summary				
HCM Average Control Delay	10.0	HCM Level of Service	A	
HCM Volume to Capacity ratio	0.42			
Actuated Cycle Length (s)	46.3	Sum of lost time (s)	12.0	
Intersection Capacity Utilization	44.0%	ICU Level of Service	A	
Analysis Period (min)	15			
c Critical Lane Group				

2017 W/O Project AM
7: Friars Rd EB Ramps & Qualcomm Wy 1/16/2015

Movement	EBL	EBT	EBR	WBL	WBT	WBR	NBL	NBT	NBR	SBL	SBT	SBR
Lane Configurations												
Ideal Flow (vphpl)	1900	1900	1900	1900	1900	1900	1900	1900	1900	1900	1900	1900
Lane Width	12	11	14	12	12	12	12	12	15	12	12	12
Total Lost time (s)		4.0	4.0					4.0	4.0	4.0	4.0	
Lane Util. Factor		1.00	1.00					0.95	1.00	1.00	0.95	
Frpb, ped/bikes		1.00	1.00					1.00	1.00	1.00	1.00	
Flpb, ped/bikes		1.00	1.00					1.00	1.00	1.00	1.00	
Frt		1.00	0.85					1.00	0.85	1.00	1.00	
Flt Protected		0.95	1.00					1.00	1.00	0.95	1.00	
Satd. Flow (prot)		1711	1689					3539	1742	1770	3539	
Flt Permitted		0.95	1.00					1.00	1.00	0.95	1.00	
Satd. Flow (perm)		1711	1689					3539	1742	1770	3539	
Volume (vph)	219	0	148	0	0	0	0	449	226	75	429	0
Peak-hour factor, PHF	0.95	0.95	0.95	0.95	0.95	0.95	0.95	0.95	0.95	0.95	0.95	0.95
Adj. Flow (vph)	231	0	156	0	0	0	0	473	238	79	452	0
RTOR Reduction (vph)	0	0	123	0	0	0	0	0	103	0	0	0
Lane Group Flow (vph)	0	231	33	0	0	0	0	473	135	79	452	0
Confl. Peds. (#/hr)												
Turn Type	Split		Perm						Perm	Prot		
Protected Phases	4	4						2		1	6	
Permitted Phases			4						2			
Actuated Green, G (s)		18.3	18.3					49.8	49.8	7.5	61.9	
Effective Green, g (s)		19.2	19.2					50.9	50.9	7.9	62.8	
Actuated g/C Ratio		0.21	0.21					0.57	0.57	0.09	0.70	
Clearance Time (s)		4.9	4.9					5.1	5.1	4.4	4.9	
Vehicle Extension (s)		3.0	3.0					3.0	3.0	3.0	3.0	
Lane Grp Cap (vph)		365	360					2002	985	155	2469	
v/s Ratio Prot		c0.14						c0.13		c0.04	0.13	
v/s Ratio Perm			0.02						0.08			
v/c Ratio		0.63	0.09					0.24	0.14	0.51	0.18	
Uniform Delay, d1		32.2	28.4					9.8	9.2	39.2	4.7	
Progression Factor		1.00	1.00					1.00	1.00	0.77	1.63	
Incremental Delay, d2		3.6	0.1					0.3	0.3	2.0	0.1	
Delay (s)		35.8	28.5					10.1	9.5	32.3	7.8	
Level of Service		D	C					B	A	C	A	
Approach Delay (s)		32.8			0.0			9.9			11.4	
Approach LOS		C			A			A			B	

Intersection Summary				
HCM Average Control Delay	15.8	HCM Level of Service	B	
HCM Volume to Capacity ratio	0.36			
Actuated Cycle Length (s)	90.0	Sum of lost time (s)	12.0	
Intersection Capacity Utilization	62.1%	ICU Level of Service	B	
Analysis Period (min)	15			
c Critical Lane Group				

2017 W/O Project AM
8: Friars Rd WB Ramps & Qualcomm Wy 1/16/2015

Movement	EBL	EBT	EBR	WBL	WBT	WBR	NBL	NBT	NBR	SBL	SBT	SBR
Lane Configurations												
Ideal Flow (vphpl)	1900	1900	1900	1900	1900	1900	1900	1900	1900	1900	1900	1900
Lane Width	12	12	12	12	16	12	12	11	12	12	16	16
Total Lost time (s)				4.0	4.0		4.0	4.0			4.0	
Lane Util. Factor				0.95	0.95		1.00	1.00			0.95	
Frpb, ped/bikes				1.00	1.00		1.00	1.00			1.00	
Flpb, ped/bikes				1.00	1.00		1.00	1.00			1.00	
Frt				1.00	0.93		1.00	1.00			0.93	
Flt Protected				0.95	0.97		0.95	1.00			1.00	
Satd. Flow (prot)				1681	1818		1770	1801			3722	
Flt Permitted				0.95	0.97		0.95	1.00			1.00	
Satd. Flow (perm)				1681	1818		1770	1801			3722	
Volume (vph)	0	0	0	274	0	83	382	304	0	0	332	307
Peak-hour factor, PHF	0.95	0.95	0.95	0.95	0.95	0.95	0.95	0.95	0.95	0.95	0.95	0.95
Adj. Flow (vph)	0	0	0	288	0	87	402	320	0	0	349	323
RTOR Reduction (vph)	0	0	0	0	41	0	0	0	0	0	187	0
Lane Group Flow (vph)	0	0	0	186	148	0	402	320	0	0	485	0
Confl. Peds. (#/hr)												
Turn Type				Split			Prot					
Protected Phases				8	8		5	2			6	
Permitted Phases												
Actuated Green, G (s)				16.0	16.0		42.2	64.0			17.1	
Effective Green, g (s)				16.9	16.9		43.1	65.1			18.0	
Actuated g/C Ratio				0.19	0.19		0.48	0.72			0.20	
Clearance Time (s)				4.9	4.9		4.9	5.1			4.9	
Vehicle Extension (s)				3.0	3.0		3.0	3.0			3.0	
Lane Grp Cap (vph)				316	341		848	1303			744	
v/s Ratio Prot				c0.11	0.08		c0.23	0.18			c0.13	
v/s Ratio Perm												
v/c Ratio				0.59	0.44		0.47	0.25			0.65	
Uniform Delay, d1				33.4	32.3		15.8	4.2			33.1	
Progression Factor				1.00	1.00		0.99	0.37			1.00	
Incremental Delay, d2				2.8	0.9		1.8	0.4			2.1	
Delay (s)				36.2	33.2		17.4	2.0			35.2	
Level of Service				D	C		B	A			D	
Approach Delay (s)		0.0			34.7			10.6			35.2	
Approach LOS		A			C			B			D	

Intersection Summary				
HCM Average Control Delay	25.0	HCM Level of Service	C	
HCM Volume to Capacity ratio	0.54			
Actuated Cycle Length (s)	90.0	Sum of lost time (s)	12.0	
Intersection Capacity Utilization	62.1%	ICU Level of Service	B	
Analysis Period (min)	15			
c Critical Lane Group				

Movement	EBT	EBR	WBL	WBT	NBL	NBR
Lane Configurations						
Ideal Flow (vphpl)	1900	1900	1900	1900	1900	1900
Total Lost time (s)	4.0	4.0	4.0	4.0	4.0	
Lane Util. Factor	0.95	1.00	0.97	1.00	0.97	
Frt	1.00	0.85	1.00	1.00	0.92	
Flt Protected	1.00	1.00	0.95	1.00	0.98	
Satd. Flow (prot)	3539	1583	3433	1863	3253	
Flt Permitted	1.00	1.00	0.69	1.00	0.98	
Satd. Flow (perm)	3539	1583	2497	1863	3253	
Volume (vph)	92	271	261	11	106	117
Peak-hour factor, PHF	0.95	0.95	0.95	0.95	0.95	0.95
Adj. Flow (vph)	97	285	275	12	112	123
RTOR Reduction (vph)	0	226	0	0	43	0
Lane Group Flow (vph)	97	59	275	12	192	0
Turn Type		Perm	Perm			
Protected Phases	4			8	2	
Permitted Phases		4	8			
Actuated Green, G (s)	11.3	11.3	11.3	11.3	36.4	
Effective Green, g (s)	11.8	11.8	11.8	11.8	36.9	
Actuated g/C Ratio	0.21	0.21	0.21	0.21	0.65	
Clearance Time (s)	4.5	4.5	4.5	4.5	4.5	
Vehicle Extension (s)	3.0	3.0	3.0	3.0	3.0	
Lane Grp Cap (vph)	737	329	520	388	2117	
v/s Ratio Prot	0.03			0.01	c0.06	
v/s Ratio Perm		0.04	c0.11			
v/c Ratio	0.13	0.18	0.53	0.03	0.09	
Uniform Delay, d1	18.3	18.5	20.0	17.9	3.7	
Progression Factor	1.00	1.00	1.00	1.00	1.00	
Incremental Delay, d2	0.1	0.3	1.0	0.0	0.1	
Delay (s)	18.4	18.7	21.0	17.9	3.8	
Level of Service	B	B	C	B	A	
Approach Delay (s)	18.6			20.8	3.8	
Approach LOS	B			C	A	

Intersection Summary			
HCM Average Control Delay	15.5	HCM Level of Service	B
HCM Volume to Capacity ratio	0.20		
Actuated Cycle Length (s)	56.7	Sum of lost time (s)	8.0
Intersection Capacity Utilization	30.9%	ICU Level of Service	A
Analysis Period (min)	15		
c Critical Lane Group			

Movement	EBL	EBT	EBR	WBL	WBT	WBR	NBL	NBT	NBR	SBL	SBT	SBR
Lane Configurations												
Ideal Flow (vphpl)	1900	1900	1900	1900	1900	1900	1900	1900	1900	1900	1900	1900
Lane Width	14	12	12	10	12	12	12	11	13	12	15	10
Total Lost time (s)	4.0	4.0		4.0	4.0			4.0	4.0		4.0	
Lane Util. Factor	1.00	0.91		1.00	0.91			1.00	1.00		1.00	
Frt	1.00	1.00		1.00	0.98			1.00	0.85		0.96	
Flt Protected	0.95	1.00		0.95	1.00			0.96	1.00		0.97	
Satd. Flow (prot)	1888	5063		1652	4989			1737	1636		1923	
Flt Permitted	0.95	1.00		0.95	1.00			0.77	1.00		0.79	
Satd. Flow (perm)	1888	5063		1652	4989			1387	1636		1571	
Volume (vph)	90	619	19	138	1215	176	68	26	42	12	4	6
Peak-hour factor, PHF	0.95	0.95	0.95	0.95	0.95	0.95	0.95	0.95	0.95	0.95	0.95	0.95
Adj. Flow (vph)	95	652	20	145	1279	185	72	27	44	13	4	6
RTOR Reduction (vph)	0	2	0	0	13	0	0	0	38	0	5	0
Lane Group Flow (vph)	95	670	0	145	1451	0	0	99	6	0	18	0
Turn Type	Prot			Prot			Perm		Perm	Perm		
Protected Phases	5	2		1	6			8			4	
Permitted Phases							8		8	4		
Actuated Green, G (s)	4.5	25.5		5.9	26.9			6.5	6.5		6.5	
Effective Green, g (s)	4.9	27.7		6.3	29.1			7.4	7.4		7.4	
Actuated g/C Ratio	0.09	0.52		0.12	0.54			0.14	0.14		0.14	
Clearance Time (s)	4.4	6.2		4.4	6.2			4.9	4.9		4.9	
Vehicle Extension (s)	3.0	3.0		3.0	3.0			3.0	3.0		3.0	
Lane Grp Cap (vph)	173	2626		195	2719			192	227		218	
v/s Ratio Prot	0.05	0.13		c0.09	c0.29							
v/s Ratio Perm								c0.07	0.00		0.01	
v/c Ratio	0.55	0.26		0.74	0.53			0.52	0.03		0.08	
Uniform Delay, d1	23.2	7.1		22.8	7.8			21.3	19.9		20.0	
Progression Factor	1.00	1.00		1.00	1.00			1.00	1.00		1.00	
Incremental Delay, d2	3.5	0.1		14.2	0.2			2.3	0.0		0.2	
Delay (s)	26.7	7.2		37.0	8.0			23.7	19.9		20.2	
Level of Service	C	A		D	A			C	B		C	
Approach Delay (s)		9.6			10.6			22.5			20.2	
Approach LOS		A			B			C			C	

Intersection Summary			
HCM Average Control Delay	11.1	HCM Level of Service	B
HCM Volume to Capacity ratio	0.53		
Actuated Cycle Length (s)	53.4	Sum of lost time (s)	8.0
Intersection Capacity Utilization	50.3%	ICU Level of Service	A
Analysis Period (min)	15		
c Critical Lane Group			

Movement	EBL	EBT	EBR	WBL	WBT	WBR	NBL	NBT	NBR	SBL	SBT	SBR
Lane Configurations												
Ideal Flow (vphpl)	1900	1900	1900	1900	1900	1900	1900	1900	1900	1900	1900	1900
Lane Width	12	12	14	10	12	12	9	12	16	12	12	12
Total Lost time (s)	4.0	4.0	4.0	4.0	4.0	4.0	4.0	4.0	4.0	4.0	4.0	4.0
Lane Util. Factor	1.00	0.91	1.00	0.97	0.91	1.00	0.97	1.00	1.00	0.97	0.95	0.95
Frpb, ped/bikes	1.00	1.00	1.00	1.00	1.00	1.00	1.00	1.00	1.00	1.00	1.00	1.00
Flpb, ped/bikes	1.00	1.00	1.00	1.00	1.00	1.00	1.00	1.00	1.00	1.00	1.00	1.00
Frt	1.00	1.00	0.85	1.00	1.00	0.85	1.00	1.00	0.85	1.00	0.89	0.85
Flt Protected	0.95	1.00	1.00	0.95	1.00	1.00	0.95	1.00	1.00	0.95	1.00	1.00
Satd. Flow (prot)	1770	5085	1689	3204	5085	1583	3090	1863	1794	3433	1583	1504
Flt Permitted	0.95	1.00	1.00	0.95	1.00	1.00	0.95	1.00	1.00	0.95	1.00	1.00
Satd. Flow (perm)	1770	5085	1689	3204	5085	1583	3090	1863	1794	3433	1583	1504
Volume (vph)	24	620	29	194	1462	22	72	5	101	92	25	144
Peak-hour factor, PHF	0.95	0.95	0.95	0.95	0.95	0.95	0.95	0.95	0.95	0.95	0.95	0.95
Adj. Flow (vph)	25	653	31	204	1539	23	76	5	106	97	26	152
RTOR Reduction (vph)	0	0	12	0	0	7	0	0	94	0	53	18
Lane Group Flow (vph)	25	653	19	204	1539	16	76	5	12	97	34	73
Confl. Peds. (#/hr)												
Turn Type	Prot		pm+ov	Prot		pm+ov	Prot		Perm	Prot		pm+ov
Protected Phases	5	2	3	1	6	7	3	8		7	4	5
Permitted Phases			2			6			8			4
Actuated Green, G (s)	6.4	64.8	69.0	11.9	70.3	76.8	4.2	11.9	11.9	6.5	14.2	20.6
Effective Green, g (s)	6.8	67.0	71.6	12.3	72.5	79.4	4.6	12.8	12.8	6.9	15.1	21.9
Actuated g/C Ratio	0.06	0.58	0.62	0.11	0.63	0.69	0.04	0.11	0.11	0.06	0.13	0.19
Clearance Time (s)	4.4	6.2	4.4	4.4	6.2	4.4	4.4	4.9	4.9	4.4	4.9	4.4
Vehicle Extension (s)	3.0	3.0	3.0	3.0	3.0	3.0	3.0	3.0	3.0	3.0	3.0	3.0
Lane Grp Cap (vph)	105	2963	1110	343	3206	1148	124	207	200	206	208	339
v/s Ratio Prot	0.01	0.13	0.00	c0.06	c0.30	0.00	0.02	0.00		c0.03	0.02	c0.01
v/s Ratio Perm			0.01			0.01			0.01			0.04
v/c Ratio	0.24	0.22	0.02	0.59	0.48	0.01	0.61	0.02	0.06	0.47	0.16	0.22
Uniform Delay, d1	51.6	11.5	8.3	49.0	11.3	5.6	54.3	45.5	45.7	52.3	44.3	39.3
Progression Factor	1.00	1.00	1.00	1.00	1.00	1.00	1.00	1.00	1.00	1.00	1.00	1.00
Incremental Delay, d2	1.2	0.2	0.0	2.8	0.5	0.0	8.7	0.0	0.1	1.7	0.4	0.3
Delay (s)	52.8	11.7	8.3	51.7	11.8	5.6	63.0	45.6	45.8	54.0	44.7	39.6
Level of Service	D	B	A	D	B	A	E	D	D	D	D	D
Approach Delay (s)		13.0			16.3			52.8			46.3	
Approach LOS		B			B			D			D	

Intersection Summary			
HCM Average Control Delay	20.6	HCM Level of Service	C
HCM Volume to Capacity ratio	0.44		
Actuated Cycle Length (s)	115.0	Sum of lost time (s)	8.0
Intersection Capacity Utilization	50.9%	ICU Level of Service	A
Analysis Period (min)	15		
c Critical Lane Group			

Movement	EBL	EBT	EBR	WBL	WBT	WBR	NBL	NBT	NBR	SBL	SBT	SBR
Lane Configurations												
Ideal Flow (vphpl)	1900	1900	1900	1900	1900	1900	1900	1900	1900	1900	1900	1900
Lane Width	10	12	16	10	13	12	11	16	12	11	15	12
Total Lost time (s)	4.0	4.0	4.0	4.0	4.0	4.0	4.0	4.0	4.0	4.0	4.0	4.0
Lane Util. Factor	0.97	0.91	1.00	0.97	0.91	1.00	0.97	1.00	1.00	0.97	1.00	1.00
Frpb, ped/bikes	1.00	1.00	1.00	1.00	1.00	1.00	1.00	1.00	1.00	1.00	1.00	1.00
Flpb, ped/bikes	1.00	1.00	1.00	1.00	1.00	1.00	1.00	1.00	1.00	1.00	1.00	1.00
Frt	1.00	1.00	0.85	1.00	1.00	0.85	1.00	1.00	0.85	1.00	1.00	0.85
Flt Protected	0.95	1.00	1.00	0.95	1.00	1.00	0.95	1.00	1.00	0.95	1.00	1.00
Satd. Flow (prot)	3204	5085	1794	3204	5255	1583	3319	2111	1583	3319	2049	1583
Flt Permitted	0.95	1.00	1.00	0.95	1.00	1.00	0.95	1.00	1.00	0.95	1.00	1.00
Satd. Flow (perm)	3204	5085	1794	3204	5255	1583	3319	2111	1583	3319	2049	1583
Volume (vph)	33	615	216	419	1210	32	78	3	174	162	31	105
Peak-hour factor, PHF	0.95	0.95	0.95	0.95	0.95	0.95	0.95	0.95	0.95	0.95	0.95	0.95
Adj. Flow (vph)	35	647	227	441	1274	34	82	3	183	171	33	111
RTOR Reduction (vph)	0	0	154	0	0	12	0	0	33	0	0	92
Lane Group Flow (vph)	35	647	73	441	1274	22	82	3	150	171	33	19
Confl. Peds. (#/hr)												
Turn Type	Prot		Perm	Prot		pm+ov	Prot		pm+ov	Prot		Perm
Protected Phases	5	2		1	6	7	3	8	1	7	4	
Permitted Phases			2			6			8			4
Actuated Green, G (s)	2.1	19.8	19.8	14.7	32.2	42.1	3.2	4.0	18.7	9.9	10.7	10.7
Effective Green, g (s)	2.5	21.8	21.8	15.1	34.4	44.7	3.6	4.9	20.0	10.3	11.6	11.6
Actuated g/C Ratio	0.04	0.32	0.32	0.22	0.51	0.66	0.05	0.07	0.29	0.15	0.17	0.17
Clearance Time (s)	4.4	6.0	6.0	4.4	6.2	4.4	4.4	4.9	4.4	4.4	4.9	4.9
Vehicle Extension (s)	3.0	3.0	3.0	3.0	3.0	3.0	3.0	3.0	3.0	3.0	3.0	3.0
Lane Grp Cap (vph)	118	1628	574	710	2655	1132	175	152	558	502	349	270
v/s Ratio Prot	0.01	0.13		c0.14	c0.24	0.00	0.02	0.00	c0.06	c0.05	0.02	
v/s Ratio Perm			0.04			0.01			0.04			0.01
v/c Ratio	0.30	0.40	0.13	0.62	0.48	0.02	0.47	0.02	0.27	0.34	0.09	0.07
Uniform Delay, d1	31.9	18.0	16.4	23.9	11.0	4.1	31.3	29.4	18.4	25.9	23.8	23.7
Progression Factor	1.00	1.00	1.00	1.00	1.00	1.00	1.00	1.00	1.00	1.00	1.00	1.00
Incremental Delay, d2	1.4	0.2	0.1	1.7	0.1	0.0	2.0	0.1	0.3	0.4	0.1	0.1
Delay (s)	33.4	18.2	16.5	25.6	11.1	4.1	33.3	29.4	18.7	26.3	23.9	23.8
Level of Service	C	B	B	C	B	A	C	C	B	C	C	C
Approach Delay (s)		18.4			14.7			23.3			25.2	
Approach LOS		B			B			C			C	

Intersection Summary			
HCM Average Control Delay	17.4	HCM Level of Service	B
HCM Volume to Capacity ratio	0.47		
Actuated Cycle Length (s)	68.1	Sum of lost time (s)	12.0
Intersection Capacity Utilization	48.0%	ICU Level of Service	A
Analysis Period (min)	15		
c Critical Lane Group			

Movement	EBL	EBT	EBR	WBL	WBT	WBR	NBL	NBT	NBR	SBL	SBT	SBR
Lane Configurations												
Ideal Flow (vphpl)	1900	1900	1900	1900	1900	1900	1900	1900	1900	1900	1900	1900
Lane Width	12	10	12	12	16	12	12	16	12	12	16	12
Total Lost time (s)		4.0	4.0		4.0		4.0	4.0		4.0	4.0	4.0
Lane Util. Factor		1.00	1.00		1.00		1.00	1.00		1.00	1.00	1.00
Frpb, ped/bikes		1.00	1.00		1.00		1.00	1.00		1.00	1.00	1.00
Flpb, ped/bikes		1.00	1.00		1.00		1.00	1.00		1.00	1.00	1.00
Frt		1.00	0.85		0.99		1.00	0.98		1.00	1.00	0.85
Flt Protected		0.97	1.00		0.96		0.95	1.00		0.95	1.00	1.00
Satd. Flow (prot)		1680	1583		2019		1770	2071		1770	2111	1583
Flt Permitted		0.97	1.00		0.96		0.95	1.00		0.95	1.00	1.00
Satd. Flow (perm)		1680	1583		2019		1770	2071		1770	2111	1583
Volume (vph)	71	30	91	164	41	12	232	355	51	5	452	124
Peak-hour factor, PHF	0.95	0.95	0.95	0.95	0.95	0.95	0.95	0.95	0.95	0.95	0.95	0.95
Adj. Flow (vph)	75	32	96	173	43	13	244	374	54	5	476	131
RTOR Reduction (vph)	0	0	82	0	3	0	0	4	0	0	0	34
Lane Group Flow (vph)	0	107	14	0	226	0	244	424	0	5	476	97
Confl. Peds. (#/hr)												
Turn Type	Split		Perm	Split			Prot			Prot		Perm
Protected Phases	4	4		3	3		5	2		1	6	
Permitted Phases			4									6
Actuated Green, G (s)		9.4	9.4		10.5		8.3	35.6		0.6	27.9	27.9
Effective Green, g (s)		10.7	10.7		11.4		8.7	36.5		1.0	28.8	28.8
Actuated g/C Ratio		0.14	0.14		0.15		0.12	0.48		0.01	0.38	0.38
Clearance Time (s)		5.3	5.3		4.9		4.4	4.9		4.4	4.9	4.9
Vehicle Extension (s)		3.5	3.5		2.0		2.0	3.9		2.0	3.9	3.9
Lane Grp Cap (vph)		238	224		304		204	1000		23	804	603
v/s Ratio Prot		c0.06			c0.11		c0.14	0.20		0.00	c0.23	
v/s Ratio Perm			0.01									0.06
v/c Ratio		0.45	0.06		0.74		1.20	0.42		0.22	0.59	0.16
Uniform Delay, d1		29.8	28.1		30.7		33.4	12.7		36.9	18.7	15.4
Progression Factor		1.00	1.00		1.00		1.00	1.00		1.00	1.00	1.00
Incremental Delay, d2		1.6	0.1		8.4		125.9	0.4		1.7	1.3	0.2
Delay (s)		31.3	28.2		39.1		159.4	13.1		38.6	20.1	15.6
Level of Service		C	C		D		F	B		D	C	B
Approach Delay (s)		29.9			39.1			66.2			19.3	
Approach LOS		C			D			E			B	

Intersection Summary			
HCM Average Control Delay	41.5	HCM Level of Service	D
HCM Volume to Capacity ratio	0.68		
Actuated Cycle Length (s)	75.6	Sum of lost time (s)	16.0
Intersection Capacity Utilization	65.3%	ICU Level of Service	C
Analysis Period (min)	15		
c Critical Lane Group			

Movement	EBL	EBT	EBR	WBL	WBT	WBR	NBL	NBT	NBR	SBL	SBT	SBR
Lane Configurations												
Ideal Flow (vphpl)	1900	1900	1900	1900	1900	1900	1900	1900	1900	1900	1900	1900
Lane Width	12	12	16	12	12	12	10	12	12	12	12	12
Total Lost time (s)	4.0	4.0	4.0	4.0	4.0		4.0	4.0	4.0	4.0	4.0	
Lane Util. Factor	1.00	1.00	1.00	0.97	1.00		0.97	0.95	1.00	1.00	0.95	
Frpb, ped/bikes	1.00	1.00	1.00	1.00	1.00		1.00	1.00	1.00	1.00	1.00	
Flpb, ped/bikes	1.00	1.00	1.00	1.00	1.00		1.00	1.00	1.00	1.00	1.00	
Frt	1.00	1.00	0.85	1.00	0.91		1.00	1.00	0.85	1.00	0.92	
Flt Protected	0.95	1.00	1.00	0.95	1.00		0.95	1.00	1.00	0.95	1.00	
Satd. Flow (prot)	1770	1863	1794	3433	1697		3204	3539	1583	1770	3255	
Flt Permitted	0.95	1.00	1.00	0.95	1.00		0.95	1.00	1.00	0.95	1.00	
Satd. Flow (perm)	1770	1863	1794	3433	1697		3204	3539	1583	1770	3255	
Volume (vph)	31	8	66	310	19	28	360	144	334	40	258	298
Peak-hour factor, PHF	0.95	0.95	0.95	0.95	0.95	0.95	0.95	0.95	0.95	0.95	0.95	0.95
Adj. Flow (vph)	33	8	69	326	20	29	379	152	352	42	272	314
RTOR Reduction (vph)	0	0	63	0	23	0	0	0	188	0	206	0
Lane Group Flow (vph)	33	8	6	326	26	0	379	152	164	42	380	0
Confl. Peds. (#/hr)												
Turn Type	Prot		Perm	Prot			Prot		Perm	Prot		
Protected Phases	7	4		3	8		5	2		1	6	
Permitted Phases		4	4		8			2	2		6	
Actuated Green, G (s)	2.6	5.5	5.5	11.2	14.1		18.1	31.5	31.5	2.8	16.2	
Effective Green, g (s)	3.0	6.4	6.4	11.6	15.0		18.5	32.5	32.5	3.2	17.2	
Actuated g/C Ratio	0.04	0.09	0.09	0.17	0.22		0.27	0.47	0.47	0.05	0.25	
Clearance Time (s)	4.4	4.9	4.9	4.4	4.9		4.4	5.0	5.0	4.4	5.0	
Vehicle Extension (s)	3.0	3.0	3.0	3.0	3.0		3.0	3.0	3.0	3.0	3.0	
Lane Grp Cap (vph)	76	171	165	571	365		850	1650	738	81	803	
v/s Ratio Prot	0.02	0.00		c0.09	c0.02		c0.12	0.04		0.02	c0.12	
v/s Ratio Perm			0.00						0.10			
v/c Ratio	0.43	0.05	0.04	0.57	0.07		0.45	0.09	0.22	0.52	0.47	
Uniform Delay, d1	32.5	28.9	28.8	26.8	21.8		21.3	10.4	11.1	32.5	22.4	
Progression Factor	1.00	1.00	1.00	1.00	1.00		1.00	1.00	1.00	1.00	1.00	
Incremental Delay, d2	3.9	0.1	0.1	1.4	0.1		1.7	0.0	0.2	5.5	0.4	
Delay (s)	36.5	29.0	28.9	28.1	21.9		23.0	10.4	11.2	38.0	22.8	
Level of Service	D	C	C	C	C		C	B	B	D	C	
Approach Delay (s)		31.2			27.3			16.1			23.8	
Approach LOS		C			C			B			C	

Intersection Summary			
HCM Average Control Delay	21.5	HCM Level of Service	C
HCM Volume to Capacity ratio	0.41		
Actuated Cycle Length (s)	69.7	Sum of lost time (s)	12.0
Intersection Capacity Utilization	52.5%	ICU Level of Service	A
Analysis Period (min)	15		
c Critical Lane Group			

Movement	EBL	EBT	EBR	WBL	WBT	WBR	NBL	NBT	NBR	SBL	SBT	SBR
Lane Configurations												
Ideal Flow (vphpl)	1900	1900	1900	1900	1900	1900	1900	1900	1900	1900	1900	1900
Lane Width	10	12	16	12	12	12	11	12	12	10	12	12
Total Lost time (s)		4.0			4.0		4.0	4.0		4.0	4.0	
Lane Util. Factor		1.00			1.00		1.00	0.95		1.00	0.95	
Frt		0.97			0.93		1.00	0.99		1.00	0.98	
Flt Protected		0.97			0.98		0.95	1.00		0.95	1.00	
Satd. Flow (prot)		1741			1690		1711	3508		1652	3454	
Flt Permitted		0.97			0.98		0.95	1.00		0.95	1.00	
Satd. Flow (perm)		1741			1690		1711	3508		1652	3454	
Volume (vph)	62	5	21	67	4	84	52	417	26	55	469	90
Peak-hour factor, PHF	0.95	0.95	0.95	0.95	0.95	0.95	0.95	0.95	0.95	0.95	0.95	0.95
Adj. Flow (vph)	65	5	22	71	4	88	55	439	27	58	494	95
RTOR Reduction (vph)	0	14	0	0	43	0	0	4	0	0	15	0
Lane Group Flow (vph)	0	78	0	0	120	0	55	462	0	58	574	0
Turn Type	Split			Split			Prot			Prot		
Protected Phases	4	4		3	3		5	2		1	6	
Permitted Phases												
Actuated Green, G (s)		5.8			4.9		2.6	12.9		2.8	13.2	
Effective Green, g (s)		5.8			4.9		2.6	14.2		2.8	14.4	
Actuated g/C Ratio		0.13			0.11		0.06	0.32		0.06	0.33	
Clearance Time (s)		4.0			4.0		4.0	5.3		4.0	5.2	
Vehicle Extension (s)		3.0			3.0		3.0	3.0		3.0	3.0	
Lane Grp Cap (vph)		231			189		102	1140		106	1138	
v/s Ratio Prot		c0.04			c0.07		0.03	0.13		c0.04	c0.17	
v/s Ratio Perm												
v/c Ratio		0.34			0.64		0.54	0.41		0.55	0.50	
Uniform Delay, d1		17.2			18.5		20.0	11.5		19.8	11.8	
Progression Factor		1.00			1.00		1.00	1.00		1.00	1.00	
Incremental Delay, d2		0.9			6.9		5.4	0.2		5.7	0.4	
Delay (s)		18.1			25.4		25.4	11.7		25.5	12.1	
Level of Service		B			C		C	B		C	B	
Approach Delay (s)		18.1			25.4			13.1			13.3	
Approach LOS		B			C			B			B	

Intersection Summary			
HCM Average Control Delay	15.0	HCM Level of Service	B
HCM Volume to Capacity ratio	0.44		
Actuated Cycle Length (s)	43.7	Sum of lost time (s)	12.0
Intersection Capacity Utilization	38.4%	ICU Level of Service	A
Analysis Period (min)	15		
c Critical Lane Group			

Movement	EBL	EBT	EBR	WBL	WBT	WBR	NBL	NBT	NBR	SBL	SBT	SBR
Lane Configurations												
Ideal Flow (vphpl)	1900	1900	1900	1900	1900	1900	1900	1900	1900	1900	1900	1900
Lane Width	12	12	12	16	12	16	12	16	12	12	16	11
Total Lost time (s)					4.0	4.0	4.0	4.0			4.0	
Lane Util. Factor					1.00	1.00	1.00	1.00			0.95	
Frpb, ped/bikes					1.00	1.00	1.00	1.00			1.00	
Flpb, ped/bikes					1.00	1.00	1.00	1.00			1.00	
Frt					1.00	0.85	1.00	1.00			0.94	
Flt Protected					0.95	1.00	0.95	1.00			1.00	
Satd. Flow (prot)					1770	1794	1770	2111			3763	
Flt Permitted					0.95	1.00	0.95	1.00			1.00	
Satd. Flow (perm)					1770	1794	1770	2111			3763	
Volume (vph)	0	0	0	12	0	331	82	253	0	0	407	286
Peak-hour factor, PHF	0.95	0.95	0.95	0.95	0.95	0.95	0.95	0.95	0.95	0.95	0.95	0.95
Adj. Flow (vph)	0	0	0	13	0	348	86	266	0	0	428	301
RTOR Reduction (vph)	0	0	0	0	0	271	0	0	0	0	144	0
Lane Group Flow (vph)	0	0	0	0	13	77	86	266	0	0	585	0
Confl. Peds. (#/hr)												
Turn Type				Perm		Perm	Prot					
Protected Phases					6		3	8			4	
Permitted Phases				6		6						
Actuated Green, G (s)					7.7	7.7	4.2	20.4			11.7	
Effective Green, g (s)					8.2	8.2	4.7	20.9			12.2	
Actuated g/C Ratio					0.22	0.22	0.13	0.56			0.33	
Clearance Time (s)					4.5	4.5	4.5	4.5			4.5	
Vehicle Extension (s)					3.0	3.0	3.0	3.0			3.0	
Lane Grp Cap (vph)					391	397	224	1189			1237	
v/s Ratio Prot							c0.05	0.13			c0.16	
v/s Ratio Perm					0.01	c0.04						
v/c Ratio					0.03	0.19	0.38	0.22			0.47	
Uniform Delay, d1					11.3	11.8	14.9	4.0			9.9	
Progression Factor					1.00	1.00	1.00	1.00			1.00	
Incremental Delay, d2					0.0	0.2	1.1	0.1			0.3	
Delay (s)					11.4	12.0	16.0	4.1			10.2	
Level of Service					B	B	B	A			B	
Approach Delay (s)		0.0			12.0			7.0			10.2	
Approach LOS		A			B			A			B	

Intersection Summary			
HCM Average Control Delay	9.9	HCM Level of Service	A
HCM Volume to Capacity ratio	0.36		
Actuated Cycle Length (s)	37.1	Sum of lost time (s)	12.0
Intersection Capacity Utilization	46.5%	ICU Level of Service	A
Analysis Period (min)	15		
c Critical Lane Group			

2017 W/O Project AM
24: I-805 SB Ramps & Murray Ridge Rd 1/16/2015

Movement	EBL	EBT	EBR	WBL	WBT	WBR	NBL	NBT	NBR	SBL	SBT	SBR
Lane Configurations												
Ideal Flow (vphpl)	1900	1900	1900	1900	1900	1900	1900	1900	1900	1900	1900	1900
Lane Width	12	14	12	12	12	12	12	16	12	12	15	12
Total Lost time (s)		4.0	4.0					4.0		4.0	4.0	
Lane Util. Factor		1.00	1.00					1.00		1.00	1.00	
Frpb, ped/bikes		1.00	1.00					1.00		1.00	1.00	
Flpb, ped/bikes		1.00	1.00					1.00		1.00	1.00	
Frt		1.00	0.85					0.96		1.00	1.00	
Flt Protected		0.95	1.00					1.00		0.95	1.00	
Satd. Flow (prot)		1888	1583					2027		1770	2049	
Flt Permitted		0.95	1.00					1.00		0.95	1.00	
Satd. Flow (perm)		1888	1583					2027		1770	2049	
Volume (vph)	192	0	12	0	0	0	0	61	26	381	85	0
Peak-hour factor, PHF	0.95	0.95	0.95	0.95	0.95	0.95	0.95	0.95	0.95	0.95	0.95	0.95
Adj. Flow (vph)	202	0	13	0	0	0	0	64	27	401	89	0
RTOR Reduction (vph)	0	0	10	0	0	0	0	20	0	0	0	0
Lane Group Flow (vph)	0	202	3	0	0	0	0	71	0	401	89	0
Confl. Peds. (#/hr)												
Turn Type	Perm		Perm							Prot		
Protected Phases		4						2		1	6	
Permitted Phases	4		4									
Actuated Green, G (s)		8.6	8.6					4.6		12.9	21.7	
Effective Green, g (s)		9.6	9.6					5.9		13.1	23.0	
Actuated g/C Ratio		0.24	0.24					0.15		0.32	0.57	
Clearance Time (s)		5.0	5.0					5.3		4.2	5.3	
Vehicle Extension (s)		3.0	3.0					3.0		3.0	3.0	
Lane Grp Cap (vph)		446	374					295		571	1161	
v/s Ratio Prot								c0.04		c0.23	0.04	
v/s Ratio Perm		0.11	0.00									
v/c Ratio		0.45	0.01					0.24		0.70	0.08	
Uniform Delay, d1		13.3	11.9					15.4		12.0	4.0	
Progression Factor		1.00	1.00					1.00		1.00	1.00	
Incremental Delay, d2		0.7	0.0					0.4		3.9	0.0	
Delay (s)		14.0	11.9					15.8		15.9	4.0	
Level of Service		B	B					B		B	A	
Approach Delay (s)		13.9			0.0			15.8			13.8	
Approach LOS		B			A			B			B	

Intersection Summary				
HCM Average Control Delay	14.0	HCM Level of Service	B	
HCM Volume to Capacity ratio	0.52			
Actuated Cycle Length (s)	40.6	Sum of lost time (s)	12.0	
Intersection Capacity Utilization	46.5%	ICU Level of Service	A	
Analysis Period (min)	15			
c Critical Lane Group				

2017 W/O Project AM
25: Rio San Diego Drive & Qualcomm Wy 1/16/2015

Movement	EBL	EBT	EBR	WBL	WBT	WBR	NBL	NBT	NBR	SBL	SBT	SBR
Lane Configurations												
Ideal Flow (vphpl)	1900	1900	1900	1900	1900	1900	1900	1900	1900	1900	1900	1900
Lane Width	12	12	14	12	12	12	10	12	12	12	12	12
Total Lost time (s)	4.0	4.0	4.0	4.0	4.0	4.0	4.0	4.0		4.0	4.0	
Lane Util. Factor	0.97	1.00	1.00	0.97	0.95	1.00	0.97	0.91		0.97	0.91	
Frpb, ped/bikes	1.00	1.00	1.00	1.00	1.00	1.00	1.00	1.00		1.00	1.00	
Flpb, ped/bikes	1.00	1.00	1.00	1.00	1.00	1.00	1.00	1.00		1.00	1.00	
Frt	1.00	1.00	0.85	1.00	1.00	0.85	1.00	0.91		1.00	0.98	
Flt Protected	0.95	1.00	1.00	0.95	1.00	1.00	0.95	1.00		0.95	1.00	
Satd. Flow (prot)	3433	1863	1689	3433	3539	1583	3204	4617		3433	4965	
Flt Permitted	0.95	1.00	1.00	0.73	1.00	1.00	0.95	1.00		0.27	1.00	
Satd. Flow (perm)	3433	1863	1689	2634	3539	1583	3204	4617		991	4965	
Volume (vph)	49	41	91	249	33	116	85	367	583	112	397	74
Peak-hour factor, PHF	0.95	0.95	0.95	0.95	0.95	0.95	0.95	0.95	0.95	0.95	0.95	0.95
Adj. Flow (vph)	52	43	96	262	35	122	89	386	614	118	418	78
RTOR Reduction (vph)	0	0	51	0	0	90	0	256	0	0	30	0
Lane Group Flow (vph)	52	43	45	262	35	32	89	744	0	118	466	0
Confl. Peds. (#/hr)												
Turn Type	Prot		pm+ov	Perm		Perm	Prot			Perm		
Protected Phases	5	2	3		6		3	8			4	
Permitted Phases			2	6		6				4		
Actuated Green, G (s)	2.0	19.5	24.2	13.2	13.2	13.2	4.7	24.6		15.5	15.5	
Effective Green, g (s)	2.4	20.6	25.7	14.2	14.2	14.2	5.1	25.9		16.8	16.8	
Actuated g/C Ratio	0.04	0.38	0.47	0.26	0.26	0.26	0.09	0.48		0.31	0.31	
Clearance Time (s)	4.4	5.1	4.4	5.0	5.0	5.0	4.4	5.3		5.3	5.3	
Vehicle Extension (s)	3.0	3.0	3.0	3.0	3.0	3.0	3.0	3.0		3.0	3.0	
Lane Grp Cap (vph)	151	704	920	686	922	412	300	2194		305	1530	
v/s Ratio Prot	c0.02	0.02	0.00		0.01		0.03	c0.16			0.09	
v/s Ratio Perm			0.02	c0.10		0.02				0.12		
v/c Ratio	0.34	0.06	0.05	0.38	0.04	0.08	0.30	0.34		0.39	0.30	
Uniform Delay, d1	25.3	10.8	7.8	16.5	15.0	15.2	23.0	8.9		14.8	14.4	
Progression Factor	1.00	1.00	1.00	1.00	1.00	1.00	1.00	1.00		1.00	1.00	
Incremental Delay, d2	1.4	0.0	0.0	0.4	0.0	0.1	0.6	0.1		0.8	0.1	
Delay (s)	26.7	10.8	7.8	16.9	15.1	15.3	23.6	9.0		15.6	14.5	
Level of Service	C	B	A	B	B	B	C	A		B	B	
Approach Delay (s)		13.6			16.3			10.2			14.7	
Approach LOS		B			B			B			B	

Intersection Summary				
HCM Average Control Delay	12.8	HCM Level of Service	B	
HCM Volume to Capacity ratio	0.35			
Actuated Cycle Length (s)	54.5	Sum of lost time (s)	12.0	
Intersection Capacity Utilization	47.3%	ICU Level of Service	A	
Analysis Period (min)	15			
c Critical Lane Group				

2017 W/O Project AM
26: Rio San Diego Drive & Rio Bonito Wy 1/16/2015

Movement	EBL	EBT	EBR	WBL	WBT	WBR	NBL	NBT	NBR	SBL	SBT	SBR
Lane Configurations												
Ideal Flow (vphpl)	1900	1900	1900	1900	1900	1900	1900	1900	1900	1900	1900	1900
Total Lost time (s)	4.0	4.0		4.0	4.0			4.0		4.0	4.0	
Lane Util. Factor	1.00	0.95		1.00	0.95			1.00		1.00	1.00	
Frt	1.00	0.98		1.00	0.99			0.98		1.00	0.89	
Flt Protected	0.95	1.00		0.95	1.00			0.97		0.95	1.00	
Satd. Flow (prot)	1770	3459		1770	3521			1762		1770	1662	
Flt Permitted	0.59	1.00		0.48	1.00			0.91		0.75	1.00	
Satd. Flow (perm)	1101	3459		895	3521			1652		1397	1662	
Volume (vph)	51	330	59	24	238	9	8	2	2	33	20	51
Peak-hour factor, PHF	0.95	0.95	0.95	0.95	0.95	0.95	0.95	0.95	0.95	0.95	0.95	0.95
Adj. Flow (vph)	54	347	62	25	251	9	8	2	2	35	21	54
RTOR Reduction (vph)	0	16	0	0	3	0	0	1	0	0	30	0
Lane Group Flow (vph)	54	393	0	25	257	0	0	11	0	35	45	0
Turn Type	Perm			Perm			Perm			Perm		
Protected Phases		4			8			2			6	
Permitted Phases	4			8			2			6		
Actuated Green, G (s)	41.3	41.3		41.3	41.3			39.7		39.7	39.7	
Effective Green, g (s)	41.8	41.8		41.8	41.8			40.2		40.2	40.2	
Actuated g/C Ratio	0.46	0.46		0.46	0.46			0.45		0.45	0.45	
Clearance Time (s)	4.5	4.5		4.5	4.5			4.5		4.5	4.5	
Lane Grp Cap (vph)	511	1607		416	1635			738		624	742	
v/s Ratio Prot		c0.11			0.07						c0.03	
v/s Ratio Perm	0.05			0.03				0.01		0.03		
v/c Ratio	0.11	0.24		0.06	0.16			0.01		0.06	0.06	
Uniform Delay, d1	13.6	14.6		13.3	13.9			13.9		14.1	14.2	
Progression Factor	1.00	1.00		1.00	1.00			1.00		1.00	1.00	
Incremental Delay, d2	0.4	0.4		0.3	0.2			0.0		0.2	0.2	
Delay (s)	14.0	14.9		13.6	14.1			13.9		14.3	14.3	
Level of Service	B	B		B	B			B		B	B	
Approach Delay (s)		14.8			14.1			13.9			14.3	
Approach LOS		B			B			B			B	

Intersection Summary				
HCM Average Control Delay	14.5	HCM Level of Service	B	
HCM Volume to Capacity ratio	0.15			
Actuated Cycle Length (s)	90.0	Sum of lost time (s)	8.0	
Intersection Capacity Utilization	31.7%	ICU Level of Service	A	
Analysis Period (min)	15			
c Critical Lane Group				

2017 W/O Project AM
51: Via Alta & Franklin Ridge Road 1/16/2015

Movement	EBT	EBR	WBL	WBT	NBL	NBR
Lane Configurations						
Ideal Flow (vphpl)	1900	1900	1900	1900	1900	1900
Total Lost time (s)	4.0			4.0	4.0	4.0
Lane Util. Factor	1.00			1.00	1.00	1.00
Frt	0.88			1.00	1.00	0.85
Flt Protected	1.00			0.98	0.95	1.00
Satd. Flow (prot)	1636			1822	1770	1583
Flt Permitted	1.00			0.82	0.95	1.00
Satd. Flow (perm)	1636			1536	1770	1583
Volume (vph)	10	97	12	15	26	2
Peak-hour factor, PHF	0.95	0.95	0.95	0.95	0.95	0.95
Adj. Flow (vph)	11	102	13	16	27	2
RTOR Reduction (vph)	92	0	0	0	0	0
Lane Group Flow (vph)	21	0	0	29	27	2
Turn Type			Perm			Perm
Protected Phases	4			8	2	
Permitted Phases			8			2
Actuated Green, G (s)	7.1			7.1	58.3	58.3
Effective Green, g (s)	7.6			7.6	58.8	58.8
Actuated g/C Ratio	0.10			0.10	0.79	0.79
Clearance Time (s)	4.5			4.5	4.5	4.5
Vehicle Extension (s)	3.0			3.0	3.0	3.0
Lane Grp Cap (vph)	167			157	1399	1251
v/s Ratio Prot	0.01				c0.02	
v/s Ratio Perm				c0.02		0.00
v/c Ratio	0.13			0.18	0.02	0.00
Uniform Delay, d1	30.4			30.6	1.7	1.6
Progression Factor	1.00			1.00	1.00	1.00
Incremental Delay, d2	0.3			0.6	0.0	0.0
Delay (s)	30.7			31.1	1.7	1.6
Level of Service	C			C	A	A
Approach Delay (s)	30.7			31.1	1.7	
Approach LOS	C			C	A	

Intersection Summary				
HCM Average Control Delay	25.9	HCM Level of Service	C	
HCM Volume to Capacity ratio	0.04			
Actuated Cycle Length (s)	74.4	Sum of lost time (s)	8.0	
Intersection Capacity Utilization	18.1%	ICU Level of Service	A	
Analysis Period (min)	15			
c Critical Lane Group				

Movement	EBL	EBT	EBR	WBL	WBT	WBR	NBL	NBT	NBR	SBL	SBT	SBR
Lane Configurations												
Ideal Flow (vphpl)	1900	1900	1900	1900	1900	1900	1900	1900	1900	1900	1900	1900
Total Lost time (s)	4.0	4.0		4.0	4.0		4.0	4.0		4.0	4.0	
Lane Util. Factor	1.00	0.95		1.00	0.95		1.00	1.00		1.00	1.00	
Frt	1.00	0.99		1.00	0.94		1.00	0.93		1.00	0.88	
Flt Protected	0.95	1.00		0.95	1.00		0.95	1.00		0.95	1.00	
Satd. Flow (prot)	1770	3493		1770	3333		1770	1735		1770	1646	
Flt Permitted	0.64	1.00		0.62	1.00		0.64	1.00		0.70	1.00	
Satd. Flow (perm)	1191	3493		1146	3333		1195	1735		1301	1646	
Volume (vph)	131	189	18	28	104	66	35	47	39	98	39	136
Peak-hour factor, PHF	0.95	0.95	0.95	0.95	0.95	0.95	0.95	0.95	0.95	0.95	0.95	0.95
Adj. Flow (vph)	138	199	19	29	109	69	37	49	41	103	41	143
RTOR Reduction (vph)	0	12	0	0	55	0	0	14	0	0	48	0
Lane Group Flow (vph)	138	206	0	29	123	0	37	76	0	103	136	0
Turn Type	Perm			Perm			Perm			Perm		
Protected Phases		4			8			2			6	
Permitted Phases	4			8			2			6		
Actuated Green, G (s)	12.3	12.3		12.3	12.3		40.8	40.8		40.8	40.8	
Effective Green, g (s)	12.8	12.8		12.8	12.8		41.3	41.3		41.3	41.3	
Actuated g/C Ratio	0.21	0.21		0.21	0.21		0.67	0.67		0.67	0.67	
Clearance Time (s)	4.5	4.5		4.5	4.5		4.5	4.5		4.5	4.5	
Vehicle Extension (s)	3.0	3.0		3.0	3.0		3.0	3.0		3.0	3.0	
Lane Grp Cap (vph)	245	720		236	687		795	1154		865	1095	
v/s Ratio Prot		0.06			0.04			0.04			c0.08	
v/s Ratio Perm	c0.12			0.03			0.03			0.08		
v/c Ratio	0.56	0.29		0.12	0.18		0.05	0.07		0.12	0.12	
Uniform Delay, d1	22.1	20.8		20.1	20.3		3.6	3.6		3.8	3.8	
Progression Factor	1.00	1.00		1.00	1.00		1.00	1.00		1.00	1.00	
Incremental Delay, d2	2.9	0.2		0.2	0.1		0.1	0.1		0.3	0.2	
Delay (s)	25.1	21.0		20.3	20.4		3.7	3.8		4.1	4.0	
Level of Service	C	C		C	C		A	A		A	A	
Approach Delay (s)		22.6			20.4			3.7			4.0	
Approach LOS		C			C			A			A	

Intersection Summary			
HCM Average Control Delay	14.2	HCM Level of Service	B
HCM Volume to Capacity ratio	0.23		
Actuated Cycle Length (s)	62.1	Sum of lost time (s)	8.0
Intersection Capacity Utilization	39.3%	ICU Level of Service	A
Analysis Period (min)	15		
c Critical Lane Group			

Movement	EBT	EBR	WBL	WBT	NBL	NBR
Lane Configurations						
Ideal Flow (vphpl)	1900	1900	1900	1900	1900	1900
Total Lost time (s)	4.0		4.0	4.0	4.0	4.0
Lane Util. Factor	0.95		1.00	0.95	1.00	1.00
Frt	0.96		1.00	1.00	1.00	0.85
Flt Protected	1.00		0.95	1.00	0.95	1.00
Satd. Flow (prot)	3400		1770	3539	1770	1583
Flt Permitted	1.00		0.43	1.00	0.95	1.00
Satd. Flow (perm)	3400		797	3539	1770	1583
Volume (vph)	340	121	224	36	163	25
Peak-hour factor, PHF	0.95	0.95	0.95	0.95	0.95	0.95
Adj. Flow (vph)	358	127	236	38	172	26
RTOR Reduction (vph)	63	0	0	0	0	13
Lane Group Flow (vph)	422	0	236	38	172	13
Turn Type			Perm			Perm
Protected Phases	4			8	2	
Permitted Phases			8			2
Actuated Green, G (s)	20.2		20.2	20.2	28.2	28.2
Effective Green, g (s)	20.7		20.7	20.7	28.7	28.7
Actuated g/C Ratio	0.36		0.36	0.36	0.50	0.50
Clearance Time (s)	4.5		4.5	4.5	4.5	4.5
Vehicle Extension (s)	3.0		3.0	3.0	3.0	3.0
Lane Grp Cap (vph)	1226		287	1276	885	792
v/s Ratio Prot	0.12			0.01	c0.10	
v/s Ratio Perm			c0.30			0.01
v/c Ratio	0.34		0.82	0.03	0.19	0.02
Uniform Delay, d1	13.4		16.7	11.9	7.9	7.2
Progression Factor	1.00		1.00	1.00	1.00	1.00
Incremental Delay, d2	0.2		17.0	0.0	0.5	0.0
Delay (s)	13.6		33.7	11.9	8.4	7.3
Level of Service	B		C	B	A	A
Approach Delay (s)	13.6			30.7	8.3	
Approach LOS	B			C	A	

Intersection Summary			
HCM Average Control Delay	17.4	HCM Level of Service	B
HCM Volume to Capacity ratio	0.46		
Actuated Cycle Length (s)	57.4	Sum of lost time (s)	8.0
Intersection Capacity Utilization	44.7%	ICU Level of Service	A
Analysis Period (min)	15		
c Critical Lane Group			

Movement	EBL	EBT	EBR	WBL	WBT	WBR	NBL	NBT	NBR	SBL	SBT	SBR
Lane Configurations												
Ideal Flow (vphpl)	1900	1900	1900	1900	1900	1900	1900	1900	1900	1900	1900	1900
Total Lost time (s)		4.0	4.0	4.0	4.0		4.0	4.0	4.0	4.0	4.0	
Lane Util. Factor		1.00	1.00	1.00	1.00		0.97	0.91	1.00	1.00	0.95	
Frt		1.00	0.85	1.00	0.91		1.00	1.00	0.85	1.00	0.99	
Flt Protected		0.96	1.00	0.95	1.00		0.95	1.00	1.00	0.95	1.00	
Satd. Flow (prot)		1798	1583	1770	1695		3433	5085	1583	1770	3496	
Flt Permitted		0.85	1.00	0.72	1.00		0.33	1.00	1.00	0.31	1.00	
Satd. Flow (perm)		1580	1583	1348	1695		1197	5085	1583	587	3496	
Volume (vph)	35	13	124	145	4	6	203	721	41	74	585	51
Peak-hour factor, PHF	0.95	0.95	0.95	0.95	0.95	0.95	0.95	0.95	0.95	0.95	0.95	0.95
Adj. Flow (vph)	37	14	131	153	4	6	214	759	43	78	616	54
RTOR Reduction (vph)	0	0	76	0	3	0	0	0	21	0	6	0
Lane Group Flow (vph)	0	51	55	153	7	0	214	759	22	78	664	0
Turn Type	Perm		Perm	Perm			Perm		Perm	Perm		
Protected Phases		4			8			2			6	
Permitted Phases	4		4	8			2		2	6		
Actuated Green, G (s)		43.8	43.8	43.8	43.8		52.2	52.2	52.2	52.2	52.2	
Effective Green, g (s)		44.3	44.3	44.3	44.3		52.7	52.7	52.7	52.7	52.7	
Actuated g/C Ratio		0.42	0.42	0.42	0.42		0.50	0.50	0.50	0.50	0.50	
Clearance Time (s)		4.5	4.5	4.5	4.5		4.5	4.5	4.5	4.5	4.5	
Lane Grp Cap (vph)		667	668	569	715		601	2552	795	295	1755	
v/s Ratio Prot					0.00			0.15			c0.19	
v/s Ratio Perm		0.03	0.03	c0.11			0.18		0.01	0.13		
v/c Ratio		0.08	0.08	0.27	0.01		0.36	0.30	0.03	0.26	0.38	
Uniform Delay, d1		18.1	18.2	19.8	17.6		15.9	15.3	13.2	15.0	16.1	
Progression Factor		1.00	1.00	1.00	1.00		1.00	1.00	1.00	1.00	1.00	
Incremental Delay, d2		0.2	0.2	1.2	0.0		1.6	0.3	0.1	2.2	0.6	
Delay (s)		18.4	18.4	20.9	17.6		17.5	15.6	13.3	17.2	16.7	
Level of Service		B	B	C	B		B	B	B	B	B	
Approach Delay (s)		18.4			20.7			15.9			16.8	
Approach LOS		B			C			B			B	

Intersection Summary			
HCM Average Control Delay	16.8	HCM Level of Service	B
HCM Volume to Capacity ratio	0.33		
Actuated Cycle Length (s)	105.0	Sum of lost time (s)	8.0
Intersection Capacity Utilization	48.3%	ICU Level of Service	A
Analysis Period (min)	15		
c Critical Lane Group			

Movement	EBL	EBT	EBR	WBL	WBT	WBR	NBL	NBT	NBR	SBL	SBT	SBR
Lane Configurations												
Ideal Flow (vphpl)	1900	1900	1900	1900	1900	1900	1900	1900	1900	1900	1900	1900
Total Lost time (s)		4.0		4.0	4.0		4.0	4.0	4.0	4.0	4.0	
Lane Util. Factor		1.00		0.95	0.95		1.00	0.95	1.00	1.00	0.95	
Frt		0.89		1.00	0.89		1.00	1.00	0.85	1.00	0.99	
Flt Protected		1.00		0.95	0.99		0.95	1.00	1.00	0.95	1.00	
Satd. Flow (prot)		1660		1681	1556		1770	3539	1583	1770	3499	
Flt Permitted		1.00		0.74	0.96		0.36	1.00	1.00	0.65	1.00	
Satd. Flow (perm)		1660		1310	1515		669	3539	1583	1203	3499	
Volume (vph)	0	5	20	30	0	20	32	160	11	4	525	43
Peak-hour factor, PHF	0.95	0.95	0.95	0.95	0.95	0.95	0.95	0.95	0.95	0.95	0.95	0.95
Adj. Flow (vph)	0	5	21	32	0	21	34	168	12	4	553	45
RTOR Reduction (vph)	0	12	0	0	12	0	0	0	6	0	6	0
Lane Group Flow (vph)	0	15	0	24	18	0	34	168	6	4	592	0
Turn Type	Perm			Perm			Perm		Perm	Perm		
Protected Phases		4			8			2			6	
Permitted Phases	4			8			2		2	6		
Actuated Green, G (s)		47.0		47.0	47.0		49.0	49.0	49.0	49.0	49.0	
Effective Green, g (s)		47.5		47.5	47.5		49.5	49.5	49.5	49.5	49.5	
Actuated g/C Ratio		0.45		0.45	0.45		0.47	0.47	0.47	0.47	0.47	
Clearance Time (s)		4.5		4.5	4.5		4.5	4.5	4.5	4.5	4.5	
Lane Grp Cap (vph)		751		593	685		315	1668	746	567	1650	
v/s Ratio Prot		0.01						0.05			c0.17	
v/s Ratio Perm				c0.02	0.01		0.05		0.00	0.00		
v/c Ratio		0.02		0.04	0.03		0.11	0.10	0.01	0.01	0.36	
Uniform Delay, d1		15.9		16.0	15.9		15.5	15.4	14.7	14.7	17.7	
Progression Factor		1.00		1.00	1.00		1.00	1.00	1.00	1.00	1.00	
Incremental Delay, d2		0.0		0.1	0.1		0.7	0.1	0.0	0.0	0.6	
Delay (s)		15.9		16.2	16.0		16.1	15.5	14.7	14.7	18.3	
Level of Service		B		B	B		B	B	B	B	B	
Approach Delay (s)		15.9			16.1			15.6			18.2	
Approach LOS		B			B			B			B	

Intersection Summary			
HCM Average Control Delay	17.4	HCM Level of Service	B
HCM Volume to Capacity ratio	0.20		
Actuated Cycle Length (s)	105.0	Sum of lost time (s)	8.0
Intersection Capacity Utilization	37.3%	ICU Level of Service	A
Analysis Period (min)	15		
c Critical Lane Group			

Movement	EBL	EBT	EBR	WBL	WBT	WBR	NBL	NBT	NBR	SBL	SBT	SBR
Lane Configurations												
Ideal Flow (vphpl)	1900	1900	1900	1900	1900	1900	1900	1900	1900	1900	1900	1900
Total Lost time (s)		4.0			4.0		4.0	4.0		4.0	4.0	
Lane Util. Factor		1.00			1.00		1.00	1.00		1.00	1.00	
Frt		0.87			0.97		1.00	1.00		1.00	1.00	
Flt Protected		1.00			0.97		0.95	1.00		0.95	1.00	
Satd. Flow (prot)		1626			1746		1770	1857		1770	1860	
Flt Permitted		0.99			0.77		0.38	1.00		0.34	1.00	
Satd. Flow (perm)		1618			1392		700	1857		638	1860	
Volume (vph)	8	8	208	39	9	16	25	498	10	5	461	5
Peak-hour factor, PHF	0.95	0.95	0.95	0.95	0.95	0.95	0.95	0.95	0.95	0.95	0.95	0.95
Adj. Flow (vph)	8	8	219	41	9	17	26	524	11	5	485	5
RTOR Reduction (vph)	0	140	0	0	11	0	0	1	0	0	0	0
Lane Group Flow (vph)	0	95	0	0	56	0	26	534	0	5	490	0
Turn Type	Perm			Perm			Perm			Perm		
Protected Phases		4			8			2			6	
Permitted Phases	4			8			2			6		
Actuated Green, G (s)		31.9			31.9		49.1	49.1		49.1	49.1	
Effective Green, g (s)		32.4			32.4		49.6	49.6		49.6	49.6	
Actuated g/C Ratio		0.36			0.36		0.55	0.55		0.55	0.55	
Clearance Time (s)		4.5			4.5		4.5	4.5		4.5	4.5	
Lane Grp Cap (vph)		582			501		386	1023		352	1025	
v/s Ratio Prot								c0.29			0.26	
v/s Ratio Perm		c0.06			0.04		0.04			0.01		
v/c Ratio		0.16			0.11		0.07	0.52		0.01	0.48	
Uniform Delay, d1		19.6			19.2		9.4	12.7		9.1	12.3	
Progression Factor		1.00			1.00		1.00	1.00		1.00	1.00	
Incremental Delay, d2		0.6			0.5		0.3	1.9		0.1	1.6	
Delay (s)		20.2			19.7		9.8	14.6		9.2	13.9	
Level of Service		C			B		A	B		A	B	
Approach Delay (s)		20.2			19.7			14.4			13.9	
Approach LOS		C			B			B			B	

Intersection Summary			
HCM Average Control Delay	15.5	HCM Level of Service	B
HCM Volume to Capacity ratio	0.38		
Actuated Cycle Length (s)	90.0	Sum of lost time (s)	8.0
Intersection Capacity Utilization	54.1%	ICU Level of Service	A
Analysis Period (min)	15		

c Critical Lane Group

Movement	EBL	EBT	EBR	WBL	WBT	WBR	NBL	NBT	NBR	SBL	SBT	SBR
Lane Configurations												
Ideal Flow (vphpl)	1900	1900	1900	1900	1900	1900	1900	1900	1900	1900	1900	1900
Total Lost time (s)	4.0	4.0	4.0		4.0		4.0	4.0		4.0	4.0	
Lane Util. Factor	1.00	1.00	1.00		1.00		1.00	1.00		1.00	1.00	
Frt	1.00	1.00	0.85		0.94		1.00	0.99		1.00	0.95	
Flt Protected	0.95	1.00	1.00		1.00		0.95	1.00		0.95	1.00	
Satd. Flow (prot)	1770	1863	1583		1737		1770	1842		1770	1763	
Flt Permitted	0.58	1.00	1.00		0.98		0.55	1.00		0.38	1.00	
Satd. Flow (perm)	1072	1863	1583		1716		1025	1842		710	1763	
Volume (vph)	234	84	54	15	106	111	69	351	28	40	144	81
Peak-hour factor, PHF	0.95	0.95	0.95	0.95	0.95	0.95	0.95	0.95	0.95	0.95	0.95	0.95
Adj. Flow (vph)	246	88	57	16	112	117	73	369	29	42	152	85
RTOR Reduction (vph)	0	0	29	0	37	0	0	3	0	0	22	0
Lane Group Flow (vph)	246	88	28	0	208	0	73	395	0	42	215	0
Turn Type	Perm		Perm	Perm			Perm			Perm		
Protected Phases		4			8			2			6	
Permitted Phases	4		4	8			2			6		
Actuated Green, G (s)	43.1	43.1	43.1		43.1		37.9	37.9		37.9	37.9	
Effective Green, g (s)	43.6	43.6	43.6		43.6		38.4	38.4		38.4	38.4	
Actuated g/C Ratio	0.48	0.48	0.48		0.48		0.43	0.43		0.43	0.43	
Clearance Time (s)	4.5	4.5	4.5		4.5		4.5	4.5		4.5	4.5	
Lane Grp Cap (vph)	519	903	767		831		437	786		303	752	
v/s Ratio Prot		0.05						c0.21			0.12	
v/s Ratio Perm	c0.23		0.02		0.12		0.07			0.06		
v/c Ratio	0.47	0.10	0.04		0.25		0.17	0.50		0.14	0.29	
Uniform Delay, d1	15.5	12.6	12.2		13.6		15.9	18.8		15.7	16.8	
Progression Factor	1.00	1.00	1.00		1.00		1.00	1.00		1.00	1.00	
Incremental Delay, d2	3.1	0.2	0.1		0.7		0.8	2.3		1.0	1.0	
Delay (s)	18.6	12.8	12.3		14.3		16.8	21.1		16.7	17.8	
Level of Service	B	B	B		B		B	C		B	B	
Approach Delay (s)		16.4			14.3			20.4			17.6	
Approach LOS		B			B			C			B	

Intersection Summary			
HCM Average Control Delay	17.6	HCM Level of Service	B
HCM Volume to Capacity ratio	0.49		
Actuated Cycle Length (s)	90.0	Sum of lost time (s)	8.0
Intersection Capacity Utilization	63.0%	ICU Level of Service	B
Analysis Period (min)	15		

c Critical Lane Group

Movement	EBL	EBT	EBR	WBL	WBT	WBR	NBL	NBT	NBR	SBL	SBT	SBR
Lane Configurations												
Ideal Flow (vphpl)	1900	1900	1900	1900	1900	1900	1900	1900	1900	1900	1900	1900
Total Lost time (s)	4.0	4.0	4.0	4.0	4.0		4.0	4.0	4.0	4.0	4.0	
Lane Util. Factor	1.00	0.95	1.00	1.00	0.95		0.95	0.95	1.00	1.00	1.00	
Frt	1.00	1.00	0.85	1.00	0.99		1.00	1.00	0.85	1.00	0.89	
Flt Protected	0.95	1.00	1.00	0.95	1.00		0.95	0.96	1.00	0.95	1.00	
Satd. Flow (prot)	1770	3539	1583	1770	3499		1681	1699	1583	1770	1650	
Flt Permitted	0.27	1.00	1.00	0.44	1.00		0.74	0.75	1.00	0.49	1.00	
Satd. Flow (perm)	502	3539	1583	818	3499		1316	1323	1583	910	1650	
Volume (vph)	37	480	134	75	670	55	544	55	150	15	5	15
Peak-hour factor, PHF	0.95	0.95	0.95	0.95	0.95	0.95	0.95	0.95	0.95	0.95	0.95	0.95
Adj. Flow (vph)	39	505	141	79	705	58	573	58	158	16	5	16
RTOR Reduction (vph)	0	0	90	0	11	0	0	0	86	0	9	0
Lane Group Flow (vph)	39	505	51	79	752	0	287	344	72	16	12	0
Turn Type	Perm		Perm	Perm			Perm		Perm	Perm		
Protected Phases		4			8			2			6	
Permitted Phases	4		4	8			2		2	6		
Actuated Green, G (s)	15.9	15.9	15.9	15.9	15.9		20.1	20.1	20.1	20.1	20.1	
Effective Green, g (s)	16.4	16.4	16.4	16.4	16.4		20.6	20.6	20.6	20.6	20.6	
Actuated g/C Ratio	0.36	0.36	0.36	0.36	0.36		0.46	0.46	0.46	0.46	0.46	
Clearance Time (s)	4.5	4.5	4.5	4.5	4.5		4.5	4.5	4.5	4.5	4.5	
Vehicle Extension (s)	3.0	3.0	3.0	3.0	3.0		3.0	3.0	3.0	3.0	3.0	
Lane Grp Cap (vph)	183	1290	577	298	1275		602	606	725	417	755	
v/s Ratio Prot		0.14			c0.21						0.01	
v/s Ratio Perm	0.08		0.03	0.10			0.22	c0.26	0.05	0.02		
v/c Ratio	0.21	0.39	0.09	0.27	0.59		0.48	0.57	0.10	0.04	0.02	
Uniform Delay, d1	9.9	10.6	9.4	10.1	11.6		8.5	8.9	6.9	6.7	6.7	
Progression Factor	1.00	1.00	1.00	1.00	1.00		1.00	1.00	1.00	1.00	1.00	
Incremental Delay, d2	0.6	0.2	0.1	0.5	0.7		0.6	1.2	0.1	0.0	0.0	
Delay (s)	10.4	10.8	9.5	10.5	12.3		9.1	10.2	7.0	6.8	6.7	
Level of Service	B	B	A	B	B		A	B	A	A	A	
Approach Delay (s)		10.5			12.1			9.1			6.7	
Approach LOS		B			B			A			A	

Intersection Summary			
HCM Average Control Delay	10.6	HCM Level of Service	B
HCM Volume to Capacity ratio	0.58		
Actuated Cycle Length (s)	45.0	Sum of lost time (s)	8.0
Intersection Capacity Utilization	56.8%	ICU Level of Service	B
Analysis Period (min)	15		

c Critical Lane Group

2017 W/O Project PM
4: Friars Rd EB Ramps & Mission Center Rd 1/16/2015

Movement	EBL	EBT	EBR	WBL	WBT	WBR	NBL	NBT	NBR	SBL	SBT	SBR
Lane Configurations												
Ideal Flow (vphpl)	1900	1900	1900	1900	1900	1900	1900	1900	1900	1900	1900	1900
Lane Width	14	12	13	12	12	12	12	13	12	15	16	12
Total Lost time (s)	4.0	4.0	4.0					4.0		4.0	4.0	
Lane Util. Factor	0.95	0.95	1.00					0.95		0.97	0.95	
Frpb, ped/bikes	1.00	1.00	1.00					1.00		1.00	1.00	
Flpb, ped/bikes	1.00	1.00	1.00					1.00		1.00	1.00	
Frt	1.00	1.00	0.85					0.97		1.00	1.00	
Flt Protected	0.95	0.95	1.00					1.00		0.95	1.00	
Satd. Flow (prot)	1793	1681	1636					3563		3776	4011	
Flt Permitted	0.95	0.95	1.00					1.00		0.95	1.00	
Satd. Flow (perm)	1793	1681	1636					3563		3776	4011	
Volume (vph)	417	0	225	0	0	0	0	701	145	374	883	0
Peak-hour factor, PHF	0.95	0.95	0.95	0.95	0.95	0.95	0.95	0.95	0.95	0.95	0.95	0.95
Adj. Flow (vph)	439	0	237	0	0	0	0	738	153	394	929	0
RTOR Reduction (vph)	0	0	124	0	0	0	0	20	0	0	0	0
Lane Group Flow (vph)	221	218	113	0	0	0	0	871	0	394	929	0
Confl. Peds. (#/hr)												
Turn Type	Split		Perm							Prot		
Protected Phases	4	4						2		1	6	
Permitted Phases			4									
Actuated Green, G (s)	13.7	13.7	13.7					21.0		11.9	36.7	
Effective Green, g (s)	14.6	14.6	14.6					22.0		12.3	38.3	
Actuated g/C Ratio	0.24	0.24	0.24					0.36		0.20	0.63	
Clearance Time (s)	4.9	4.9	4.9					5.0		4.4	5.6	
Vehicle Extension (s)	3.0	3.0	3.0					3.0		3.0	3.0	
Lane Grp Cap (vph)	430	403	392					1287		763	2523	
v/s Ratio Prot	0.12	c0.13						c0.24		c0.10	0.23	
v/s Ratio Perm			0.07									
v/c Ratio	0.51	0.54	0.29					0.68		0.52	0.37	
Uniform Delay, d1	20.1	20.2	18.9					16.4		21.7	5.5	
Progression Factor	1.00	1.00	1.00					1.00		1.00	1.00	
Incremental Delay, d2	1.0	1.5	0.4					1.4		0.6	0.1	
Delay (s)	21.1	21.7	19.3					17.9		22.2	5.5	
Level of Service	C	C	B					B		C	A	
Approach Delay (s)		20.7			0.0			17.9			10.5	
Approach LOS		C			A			B			B	

Intersection Summary			
HCM Average Control Delay	15.2	HCM Level of Service	B
HCM Volume to Capacity ratio	0.60		
Actuated Cycle Length (s)	60.9	Sum of lost time (s)	12.0
Intersection Capacity Utilization	56.6%	ICU Level of Service	B
Analysis Period (min)	15		
c Critical Lane Group			

2017 W/O Project PM
5: Friars Rd WB Ramps & Mission Center Rd 1/16/2015

Movement	EBL	EBT	EBR	WBL	WBT	WBR	NBL	NBT	NBR	SBL	SBT	SBR
Lane Configurations												
Ideal Flow (vphpl)	1900	1900	1900	1900	1900	1900	1900	1900	1900	1900	1900	1900
Lane Width	12	12	12	15	12	15	10	12	12	12	14	11
Total Lost time (s)				4.0	4.0	4.0	4.0	4.0			4.0	4.0
Lane Util. Factor				0.95	0.95	1.00	0.97	0.95			0.95	1.00
Frpb, ped/bikes				1.00	1.00	1.00	1.00	1.00			1.00	1.00
Flpb, ped/bikes				1.00	1.00	1.00	1.00	1.00			1.00	1.00
Frt				1.00	1.00	0.85	1.00	1.00			1.00	0.85
Flt Protected				0.95	0.95	1.00	0.95	1.00			1.00	1.00
Satd. Flow (prot)				1849	1681	1742	3204	3539			3775	1531
Flt Permitted				0.95	0.95	1.00	0.95	1.00			1.00	1.00
Satd. Flow (perm)				1849	1681	1742	3204	3539			3775	1531
Volume (vph)	0	0	0	255	0	380	193	955	0	0	1000	269
Peak-hour factor, PHF	0.95	0.95	0.95	0.95	0.95	0.95	0.95	0.95	0.95	0.95	0.95	0.95
Adj. Flow (vph)	0	0	0	268	0	400	203	1005	0	0	1053	283
RTOR Reduction (vph)	0	0	0	0	0	75	0	0	0	0	0	122
Lane Group Flow (vph)	0	0	0	137	131	325	203	1005	0	0	1053	161
Confl. Peds. (#/hr)												
Turn Type				Split		Perm	Prot					Perm
Protected Phases				8	8		5	2			6	
Permitted Phases						8						6
Actuated Green, G (s)				17.6	17.6	17.6	7.1	37.8			25.3	25.3
Effective Green, g (s)				18.5	18.5	18.5	7.5	38.8			27.3	27.3
Actuated g/C Ratio				0.28	0.28	0.28	0.11	0.59			0.42	0.42
Clearance Time (s)				4.9	4.9	4.9	4.4	5.0			6.0	6.0
Vehicle Extension (s)				3.0	3.0	3.0	3.0	3.0			3.0	3.0
Lane Grp Cap (vph)				524	476	494	368	2103			1578	640
v/s Ratio Prot				0.07	0.08		0.06	c0.28			c0.28	
v/s Ratio Perm						c0.19						0.11
v/c Ratio				0.26	0.28	0.66	0.55	0.48			0.67	0.25
Uniform Delay, d1				18.1	18.2	20.6	27.3	7.5			15.3	12.4
Progression Factor				1.00	1.00	1.00	1.00	1.00			1.00	1.00
Incremental Delay, d2				0.3	0.3	3.2	1.8	0.2			1.1	0.2
Delay (s)				18.4	18.5	23.8	29.1	7.7			16.4	12.6
Level of Service				B	B	C	C	A			B	B
Approach Delay (s)		0.0			21.6			11.3			15.6	
Approach LOS		A			C			B			B	

Intersection Summary			
HCM Average Control Delay	15.2	HCM Level of Service	B
HCM Volume to Capacity ratio	0.65		
Actuated Cycle Length (s)	65.3	Sum of lost time (s)	12.0
Intersection Capacity Utilization	56.6%	ICU Level of Service	B
Analysis Period (min)	15		
c Critical Lane Group			

2017 W/O Project PM
7: Friars Rd EB Ramps & Qualcomm Wy 1/16/2015

Movement	EBL	EBT	EBR	WBL	WBT	WBR	NBL	NBT	NBR	SBL	SBT	SBR
Lane Configurations												
Ideal Flow (vphpl)	1900	1900	1900	1900	1900	1900	1900	1900	1900	1900	1900	1900
Lane Width	12	11	14	12	12	12	12	12	15	12	12	12
Total Lost time (s)		4.0	4.0					4.0	4.0	4.0	4.0	
Lane Util. Factor		1.00	1.00					0.95	1.00	1.00	0.95	
Frpb, ped/bikes		1.00	1.00					1.00	1.00	1.00	1.00	
Flpb, ped/bikes		1.00	1.00					1.00	1.00	1.00	1.00	
Frt		1.00	0.85					1.00	0.85	1.00	1.00	
Flt Protected		0.95	1.00					1.00	1.00	0.95	1.00	
Satd. Flow (prot)		1711	1689					3539	1742	1770	3539	
Flt Permitted		0.95	1.00					1.00	1.00	0.95	1.00	
Satd. Flow (perm)		1711	1689					3539	1742	1770	3539	
Volume (vph)	344	0	252	0	0	0	0	1104	581	75	689	0
Peak-hour factor, PHF	0.95	0.95	0.95	0.95	0.95	0.95	0.95	0.95	0.95	0.95	0.95	0.95
Adj. Flow (vph)	362	0	265	0	0	0	0	1162	612	79	725	0
RTOR Reduction (vph)	0	0	128	0	0	0	0	0	301	0	0	0
Lane Group Flow (vph)	0	362	137	0	0	0	0	1162	311	79	725	0
Confl. Peds. (#/hr)												
Turn Type	Split		Perm						Perm	Prot		
Protected Phases	4	4						2		1	6	
Permitted Phases			4						2			
Actuated Green, G (s)		23.9	23.9					44.6	44.6	7.1	56.3	
Effective Green, g (s)		24.8	24.8					45.7	45.7	7.5	57.2	
Actuated g/C Ratio		0.28	0.28					0.51	0.51	0.08	0.64	
Clearance Time (s)		4.9	4.9					5.1	5.1	4.4	4.9	
Vehicle Extension (s)		3.0	3.0					3.0	3.0	3.0	3.0	
Lane Grp Cap (vph)		471	465					1797	885	148	2249	
v/s Ratio Prot		c0.21						c0.33		c0.04	0.20	
v/s Ratio Perm			0.08						0.18			
v/c Ratio		0.77	0.29					0.65	0.35	0.53	0.32	
Uniform Delay, d1		30.0	25.7					16.2	13.3	39.6	7.5	
Progression Factor		1.00	1.00					1.00	1.00	1.00	1.00	
Incremental Delay, d2		7.4	0.4					1.8	1.1	3.7	0.4	
Delay (s)		37.4	26.1					18.0	14.4	43.2	7.9	
Level of Service		D	C					B	B	D	A	
Approach Delay (s)		32.6			0.0			16.8			11.4	
Approach LOS		C			A			B			B	

Intersection Summary			
HCM Average Control Delay	18.5	HCM Level of Service	B
HCM Volume to Capacity ratio	0.67		
Actuated Cycle Length (s)	90.0	Sum of lost time (s)	12.0
Intersection Capacity Utilization	103.0%	ICU Level of Service	G
Analysis Period (min)	15		
c Critical Lane Group			

2017 W/O Project PM
8: Friars Rd WB Ramps & Qualcomm Wy 1/16/2015

Movement	EBL	EBT	EBR	WBL	WBT	WBR	NBL	NBT	NBR	SBL	SBT	SBR
Lane Configurations												
Ideal Flow (vphpl)	1900	1900	1900	1900	1900	1900	1900	1900	1900	1900	1900	1900
Lane Width	12	12	12	12	16	12	12	11	12	12	16	16
Total Lost time (s)				4.0	4.0		4.0	4.0			4.0	
Lane Util. Factor				0.95	0.95		1.00	1.00			0.95	
Frpb, ped/bikes				1.00	1.00		1.00	1.00			1.00	
Flpb, ped/bikes				1.00	1.00		1.00	1.00			1.00	
Frt				1.00	0.93		1.00	1.00			0.94	
Flt Protected				0.95	0.97		0.95	1.00			1.00	
Satd. Flow (prot)				1681	1821		1770	1801			3751	
Flt Permitted				0.95	0.97		0.95	1.00			1.00	
Satd. Flow (perm)				1681	1821		1770	1801			3751	
Volume (vph)	0	0	0	408	0	119	790	692	0	0	503	382
Peak-hour factor, PHF	0.95	0.95	0.95	0.95	0.95	0.95	0.95	0.95	0.95	0.95	0.95	0.95
Adj. Flow (vph)	0	0	0	429	0	125	832	728	0	0	529	402
RTOR Reduction (vph)	0	0	0	0	23	0	0	0	0	0	106	0
Lane Group Flow (vph)	0	0	0	275	256	0	832	728	0	0	825	0
Confl. Peds. (#/hr)												
Turn Type				Split			Prot					
Protected Phases				8	8		5	2			6	
Permitted Phases												
Actuated Green, G (s)				24.5	24.5		63.6	95.5			27.2	
Effective Green, g (s)				25.4	25.4		64.5	96.6			28.1	
Actuated g/C Ratio				0.20	0.20		0.50	0.74			0.22	
Clearance Time (s)				4.9	4.9		4.9	5.1			4.9	
Vehicle Extension (s)				3.0	3.0		3.0	3.0			3.0	
Lane Grp Cap (vph)				328	356		878	1338			811	
v/s Ratio Prot				c0.16	0.14		c0.47	0.40			c0.22	
v/s Ratio Perm												
v/c Ratio				0.84	0.72		0.95	0.54			1.02	
Uniform Delay, d1				50.3	48.9		31.1	7.2			51.0	
Progression Factor				1.00	1.00		1.00	1.00			1.00	
Incremental Delay, d2				16.8	6.8		20.0	1.6			36.1	
Delay (s)				67.2	55.7		51.2	8.8			87.0	
Level of Service				E	E		D	A			F	
Approach Delay (s)		0.0			61.4			31.4			87.0	
Approach LOS		A			E			C			F	

Intersection Summary			
HCM Average Control Delay	53.9	HCM Level of Service	D
HCM Volume to Capacity ratio	0.94		
Actuated Cycle Length (s)	130.0	Sum of lost time (s)	12.0
Intersection Capacity Utilization	103.0%	ICU Level of Service	G
Analysis Period (min)	15		
c Critical Lane Group			

Movement	EBT	EBR	WBL	WBT	NBL	NBR
Lane Configurations						
Ideal Flow (vphpl)	1900	1900	1900	1900	1900	1900
Total Lost time (s)	4.0	4.0	4.0	4.0	4.0	
Lane Util. Factor	0.95	1.00	0.97	1.00	0.97	
Frt	1.00	0.85	1.00	1.00	0.94	
Flt Protected	1.00	1.00	0.95	1.00	0.97	
Satd. Flow (prot)	3539	1583	3433	1863	3297	
Flt Permitted	1.00	1.00	0.62	1.00	0.97	
Satd. Flow (perm)	3539	1583	2230	1863	3297	
Volume (vph)	204	276	382	95	433	292
Peak-hour factor, PHF	0.95	0.95	0.95	0.95	0.95	0.95
Adj. Flow (vph)	215	291	402	100	456	307
RTOR Reduction (vph)	0	214	0	0	96	0
Lane Group Flow (vph)	215	77	402	100	667	0
Turn Type		Perm	Perm			
Protected Phases	4			8	2	
Permitted Phases		4	8			
Actuated Green, G (s)	17.3	17.3	17.3	17.3	41.2	
Effective Green, g (s)	17.8	17.8	17.8	17.8	41.7	
Actuated g/C Ratio	0.26	0.26	0.26	0.26	0.62	
Clearance Time (s)	4.5	4.5	4.5	4.5	4.5	
Vehicle Extension (s)	3.0	3.0	3.0	3.0	3.0	
Lane Grp Cap (vph)	933	417	588	491	2037	
v/s Ratio Prot	0.06			0.05	c0.20	
v/s Ratio Perm		0.05	c0.18			
v/c Ratio	0.23	0.18	0.68	0.20	0.33	
Uniform Delay, d1	19.5	19.2	22.3	19.3	6.2	
Progression Factor	1.00	1.00	1.00	1.00	1.00	
Incremental Delay, d2	0.1	0.2	3.3	0.2	0.4	
Delay (s)	19.6	19.4	25.6	19.5	6.6	
Level of Service	B	B	C	B	A	
Approach Delay (s)	19.5			24.4	6.6	
Approach LOS	B			C	A	

Intersection Summary			
HCM Average Control Delay	15.3	HCM Level of Service	B
HCM Volume to Capacity ratio	0.43		
Actuated Cycle Length (s)	67.5	Sum of lost time (s)	8.0
Intersection Capacity Utilization	48.1%	ICU Level of Service	A
Analysis Period (min)	15		
c Critical Lane Group			

Movement	EBL	EBT	EBR	WBL	WBT	WBR	NBL	NBT	NBR	SBL	SBT	SBR
Lane Configurations												
Ideal Flow (vphpl)	1900	1900	1900	1900	1900	1900	1900	1900	1900	1900	1900	1900
Lane Width	14	12	12	10	12	12	12	11	13	12	15	10
Total Lost time (s)	4.0	4.0		4.0	4.0			4.0	4.0		4.0	
Lane Util. Factor	1.00	0.91		1.00	0.91			1.00	1.00		1.00	
Frt	1.00	0.99		1.00	1.00			1.00	0.85		0.96	
Flt Protected	0.95	1.00		0.95	1.00			0.96	1.00		0.97	
Satd. Flow (prot)	1888	5029		1652	5070			1720	1636		1900	
Flt Permitted	0.95	1.00		0.95	1.00			0.71	1.00		0.78	
Satd. Flow (perm)	1888	5029		1652	5070			1287	1636		1531	
Volume (vph)	24	2276	181	52	1410	29	30	2	113	164	7	78
Peak-hour factor, PHF	0.95	0.95	0.95	0.95	0.95	0.95	0.95	0.95	0.95	0.95	0.95	0.95
Adj. Flow (vph)	25	2396	191	55	1484	31	32	2	119	173	7	82
RTOR Reduction (vph)	0	6	0	0	1	0	0	0	59	0	12	0
Lane Group Flow (vph)	25	2581	0	55	1514	0	0	34	60	0	250	0
Turn Type	Prot			Prot			Perm		Perm	Perm		
Protected Phases	5	2		1	6			8			4	
Permitted Phases							8		8	4		
Actuated Green, G (s)	2.8	71.3		6.6	75.1			22.8	22.8		22.8	
Effective Green, g (s)	3.2	73.5		7.0	77.3			23.7	23.7		23.7	
Actuated g/C Ratio	0.03	0.63		0.06	0.67			0.20	0.20		0.20	
Clearance Time (s)	4.4	6.2		4.4	6.2			4.9	4.9		4.9	
Vehicle Extension (s)	3.0	3.0		3.0	3.0			3.0	3.0		3.0	
Lane Grp Cap (vph)	52	3181		100	3373			262	334		312	
v/s Ratio Prot	0.01	c0.51		c0.03	c0.30							
v/s Ratio Perm								0.03	0.04		c0.16	
v/c Ratio	0.48	0.81		0.55	0.45			0.13	0.18		0.80	
Uniform Delay, d1	55.7	16.1		53.1	9.3			37.8	38.2		44.0	
Progression Factor	1.00	1.00		1.00	1.00			1.00	1.00		1.00	
Incremental Delay, d2	6.9	1.7		6.4	0.1			0.2	0.3		13.7	
Delay (s)	62.5	17.8		59.5	9.4			38.0	38.5		57.7	
Level of Service	E	B		E	A			D	D		E	
Approach Delay (s)		18.2			11.1			38.4			57.7	
Approach LOS		B			B			D			E	

Intersection Summary			
HCM Average Control Delay	18.7	HCM Level of Service	B
HCM Volume to Capacity ratio	0.82		
Actuated Cycle Length (s)	116.2	Sum of lost time (s)	16.0
Intersection Capacity Utilization	79.2%	ICU Level of Service	D
Analysis Period (min)	15		
c Critical Lane Group			

Movement	EBL	EBT	EBR	WBL	WBT	WBR	NBL	NBT	NBR	SBL	SBT	SBR
Lane Configurations												
Ideal Flow (vphpl)	1900	1900	1900	1900	1900	1900	1900	1900	1900	1900	1900	1900
Lane Width	12	12	14	10	12	12	9	12	16	12	12	12
Total Lost time (s)	4.0	4.0	4.0	4.0	4.0	4.0	4.0	4.0	4.0	4.0	4.0	4.0
Lane Util. Factor	1.00	0.91	1.00	0.97	0.91	1.00	0.97	1.00	1.00	0.97	0.95	0.95
Frpb, ped/bikes	1.00	1.00	1.00	1.00	1.00	1.00	1.00	1.00	1.00	1.00	1.00	1.00
Flpb, ped/bikes	1.00	1.00	1.00	1.00	1.00	1.00	1.00	1.00	1.00	1.00	1.00	1.00
Frt	1.00	1.00	0.85	1.00	1.00	0.85	1.00	1.00	0.85	1.00	0.91	0.85
Flt Protected	0.95	1.00	1.00	0.95	1.00	1.00	0.95	1.00	1.00	0.95	1.00	1.00
Satd. Flow (prot)	1770	5085	1689	3204	5085	1583	3090	1863	1794	3433	1616	1504
Flt Permitted	0.95	1.00	1.00	0.95	1.00	1.00	0.95	1.00	1.00	0.95	1.00	1.00
Satd. Flow (perm)	1770	5085	1689	3204	5085	1583	3090	1863	1794	3433	1616	1504
Volume (vph)	143	2074	309	177	1473	72	223	18	277	23	10	46
Peak-hour factor, PHF	0.95	0.95	0.95	0.95	0.95	0.95	0.95	0.95	0.95	0.95	0.95	0.95
Adj. Flow (vph)	151	2183	325	186	1551	76	235	19	292	24	11	48
RTOR Reduction (vph)	0	0	101	0	0	32	0	0	149	0	13	5
Lane Group Flow (vph)	151	2183	224	186	1551	44	235	19	143	24	13	28
Confl. Peds. (#/hr)												
Turn Type	Prot		pm+ov	Prot		pm+ov	Prot		Perm	Prot		pm+ov
Protected Phases	5	2	3	1	6	7	3	8		7	4	5
Permitted Phases			2			6			8			4
Actuated Green, G (s)	15.5	81.9	95.3	11.6	78.0	82.1	13.4	27.5	27.5	4.1	18.2	33.7
Effective Green, g (s)	15.9	84.1	97.9	12.0	80.2	84.7	13.8	28.4	28.4	4.5	19.1	35.0
Actuated g/C Ratio	0.11	0.58	0.68	0.08	0.55	0.58	0.10	0.20	0.20	0.03	0.13	0.24
Clearance Time (s)	4.4	6.2	4.4	4.4	6.2	4.4	4.4	4.9	4.9	4.4	4.9	4.4
Vehicle Extension (s)	3.0	3.0	3.0	3.0	3.0	3.0	3.0	3.0	3.0	3.0	3.0	3.0
Lane Grp Cap (vph)	194	2949	1187	265	2813	968	294	365	351	107	213	405
v/s Ratio Prot	c0.09	c0.43	0.02	0.06	0.30	0.00	c0.08	0.01		0.01	0.01	0.01
v/s Ratio Perm			0.11			0.03			c0.08			0.01
v/c Ratio	0.78	0.74	0.19	0.70	0.55	0.05	0.80	0.05	0.41	0.22	0.06	0.07
Uniform Delay, d1	62.8	22.4	8.8	64.8	20.8	12.9	64.2	47.4	51.0	68.5	55.1	42.4
Progression Factor	1.00	1.00	1.00	1.00	1.00	1.00	1.00	1.00	1.00	1.00	1.00	1.00
Incremental Delay, d2	17.7	1.7	0.1	8.1	0.8	0.0	14.1	0.1	0.8	1.1	0.1	0.1
Delay (s)	80.5	24.1	8.8	72.9	21.6	12.9	78.3	47.4	51.7	69.6	55.2	42.5
Level of Service	F	C	A	E	C	B	E	D	D	E	E	D
Approach Delay (s)		25.5			26.5			63.0			54.3	
Approach LOS		C			C			E			D	

Intersection Summary			
HCM Average Control Delay	30.3	HCM Level of Service	C
HCM Volume to Capacity ratio	0.70		
Actuated Cycle Length (s)	145.0	Sum of lost time (s)	12.0
Intersection Capacity Utilization	70.6%	ICU Level of Service	C
Analysis Period (min)	15		
c Critical Lane Group			

Movement	EBL	EBT	EBR	WBL	WBT	WBR	NBL	NBT	NBR	SBL	SBT	SBR
Lane Configurations												
Ideal Flow (vphpl)	1900	1900	1900	1900	1900	1900	1900	1900	1900	1900	1900	1900
Lane Width	10	12	16	10	13	12	11	16	12	11	15	12
Total Lost time (s)	4.0	4.0	4.0	4.0	4.0	4.0	4.0	4.0	4.0	4.0	4.0	4.0
Lane Util. Factor	0.97	0.91	1.00	0.97	0.91	1.00	0.97	1.00	1.00	0.97	1.00	1.00
Frpb, ped/bikes	1.00	1.00	1.00	1.00	1.00	1.00	1.00	1.00	1.00	1.00	1.00	1.00
Flpb, ped/bikes	1.00	1.00	1.00	1.00	1.00	1.00	1.00	1.00	1.00	1.00	1.00	1.00
Frt	1.00	1.00	0.85	1.00	1.00	0.85	1.00	1.00	0.85	1.00	1.00	0.85
Flt Protected	0.95	1.00	1.00	0.95	1.00	1.00	0.95	1.00	1.00	0.95	1.00	1.00
Satd. Flow (prot)	3204	5085	1794	3204	5255	1583	3319	2111	1583	3319	2049	1583
Flt Permitted	0.95	1.00	1.00	0.95	1.00	1.00	0.95	1.00	1.00	0.95	1.00	1.00
Satd. Flow (perm)	3204	5085	1794	3204	5255	1583	3319	2111	1583	3319	2049	1583
Volume (vph)	210	2353	221	488	1147	131	183	19	672	68	21	84
Peak-hour factor, PHF	0.95	0.95	0.95	0.95	0.95	0.95	0.95	0.95	0.95	0.95	0.95	0.95
Adj. Flow (vph)	221	2477	233	514	1207	138	193	20	707	72	22	88
RTOR Reduction (vph)	0	0	76	0	0	49	0	0	1	0	0	77
Lane Group Flow (vph)	221	2477	157	514	1207	89	193	20	706	72	22	11
Confl. Peds. (#/hr)												
Turn Type	Prot		Perm	Prot		pm+ov	Prot		pm+ov	Prot		Perm
Protected Phases	5	2		1	6	7	3	8	1	7	4	
Permitted Phases			2			6			8			4
Actuated Green, G (s)	13.3	63.1	63.1	21.8	71.4	82.7	11.9	16.5	38.3	11.3	15.9	15.9
Effective Green, g (s)	13.7	65.1	65.1	22.2	73.6	85.3	12.3	17.4	39.6	11.7	16.8	16.8
Actuated g/C Ratio	0.10	0.49	0.49	0.17	0.56	0.64	0.09	0.13	0.30	0.09	0.13	0.13
Clearance Time (s)	4.4	6.0	6.0	4.4	6.2	4.4	4.4	4.9	4.4	4.4	4.9	4.9
Vehicle Extension (s)	3.0	3.0	3.0	3.0	3.0	3.0	3.0	3.0	3.0	3.0	3.0	3.0
Lane Grp Cap (vph)	332	2500	882	537	2921	1068	308	277	521	293	260	201
v/s Ratio Prot	0.07	c0.49		0.16	0.23	0.01	c0.06	0.01	c0.23	0.02	0.01	
v/s Ratio Perm			0.09			0.05			0.22			0.01
v/c Ratio	0.67	0.99	0.18	0.96	0.41	0.08	0.63	0.07	1.36	0.25	0.08	0.06
Uniform Delay, d1	57.1	33.4	18.7	54.6	17.0	8.9	57.8	50.4	46.4	56.2	51.0	50.8
Progression Factor	1.00	1.00	1.00	1.00	1.00	1.00	1.00	1.00	1.00	1.00	1.00	1.00
Incremental Delay, d2	5.0	15.8	0.1	28.1	0.1	0.0	3.9	0.1	172.3	0.4	0.1	0.1
Delay (s)	62.1	49.2	18.8	82.7	17.0	8.9	61.8	50.5	218.7	56.7	51.2	50.9
Level of Service	E	D	B	F	B	A	E	D	F	E	D	D
Approach Delay (s)		47.7			34.6			182.1			53.2	
Approach LOS		D			C			F			D	

Intersection Summary			
HCM Average Control Delay	64.7	HCM Level of Service	E
HCM Volume to Capacity ratio	1.06		
Actuated Cycle Length (s)	132.4	Sum of lost time (s)	8.0
Intersection Capacity Utilization	100.4%	ICU Level of Service	G
Analysis Period (min)	15		
c Critical Lane Group			

Movement	EBL	EBT	EBR	WBL	WBT	WBR	NBL	NBT	NBR	SBL	SBT	SBR
Lane Configurations												
Ideal Flow (vphpl)	1900	1900	1900	1900	1900	1900	1900	1900	1900	1900	1900	1900
Lane Width	12	10	12	12	16	12	12	16	12	12	16	12
Total Lost time (s)		4.0	4.0		4.0		4.0	4.0		4.0	4.0	4.0
Lane Util. Factor		1.00	1.00		1.00		1.00	1.00		1.00	1.00	1.00
Frpb, ped/bikes		1.00	1.00		1.00		1.00	1.00		1.00	1.00	1.00
Flpb, ped/bikes		1.00	1.00		1.00		1.00	1.00		1.00	1.00	1.00
Frt		1.00	0.85		1.00		1.00	0.98		1.00	1.00	0.85
Flt Protected		0.96	1.00		0.97		0.95	1.00		0.95	1.00	1.00
Satd. Flow (prot)		1675	1583		2032		1770	2062		1770	2111	1583
Flt Permitted		0.96	1.00		0.97		0.95	1.00		0.95	1.00	1.00
Satd. Flow (perm)		1675	1583		2032		1770	2062		1770	2111	1583
Volume (vph)	243	76	480	111	47	6	264	450	83	15	374	176
Peak-hour factor, PHF	0.95	0.95	0.95	0.95	0.95	0.95	0.95	0.95	0.95	0.95	0.95	0.95
Adj. Flow (vph)	256	80	505	117	49	6	278	474	87	16	394	185
RTOR Reduction (vph)	0	0	298	0	2	0	0	6	0	0	0	66
Lane Group Flow (vph)	0	336	207	0	170	0	278	555	0	16	394	119
Confl. Peds. (#/hr)												
Turn Type	Split		Perm	Split			Prot			Prot		Perm
Protected Phases	4	4		3	3		5	2		1	6	
Permitted Phases			4									6
Actuated Green, G (s)		18.9	18.9		9.8		8.3	30.1		0.6	22.4	22.4
Effective Green, g (s)		20.2	20.2		10.7		8.7	31.0		1.0	23.3	23.3
Actuated g/C Ratio		0.26	0.26		0.14		0.11	0.39		0.01	0.30	0.30
Clearance Time (s)		5.3	5.3		4.9		4.4	4.9		4.4	4.9	4.9
Vehicle Extension (s)		3.5	3.5		2.0		2.0	3.9		2.0	3.9	3.9
Lane Grp Cap (vph)		429	405		276		195	810		22	623	467
v/s Ratio Prot		c0.20			c0.08		c0.16	c0.27		0.01	0.19	
v/s Ratio Perm			0.13									0.08
v/c Ratio		0.78	0.51		0.62		1.43	0.69		0.73	0.63	0.25
Uniform Delay, d1		27.3	25.1		32.2		35.1	19.9		38.8	24.1	21.2
Progression Factor		1.00	1.00		1.00		1.00	1.00		1.00	1.00	1.00
Incremental Delay, d2		9.3	1.3		2.9		218.6	2.6		67.5	2.3	0.4
Delay (s)		36.6	26.4		35.0		253.7	22.5		106.4	26.4	21.6
Level of Service		D	C		D		F	C		F	C	C
Approach Delay (s)		30.5			35.0			99.1			27.1	
Approach LOS		C			D			F			C	

Intersection Summary			
HCM Average Control Delay	53.5	HCM Level of Service	D
HCM Volume to Capacity ratio	0.78		
Actuated Cycle Length (s)	78.9	Sum of lost time (s)	12.0
Intersection Capacity Utilization	68.4%	ICU Level of Service	C
Analysis Period (min)	15		
c Critical Lane Group			

Movement	EBL	EBT	EBR	WBL	WBT	WBR	NBL	NBT	NBR	SBL	SBT	SBR
Lane Configurations												
Ideal Flow (vphpl)	1900	1900	1900	1900	1900	1900	1900	1900	1900	1900	1900	1900
Lane Width	12	12	16	12	12	12	10	12	12	12	12	12
Total Lost time (s)	4.0	4.0	4.0	4.0	4.0		4.0	4.0	4.0	4.0	4.0	
Lane Util. Factor	1.00	1.00	1.00	0.97	1.00		0.97	0.95	1.00	1.00	0.95	
Frpb, ped/bikes	1.00	1.00	1.00	1.00	1.00		1.00	1.00	1.00	1.00	1.00	
Flpb, ped/bikes	1.00	1.00	1.00	1.00	1.00		1.00	1.00	1.00	1.00	1.00	
Frt	1.00	1.00	0.85	1.00	0.90		1.00	1.00	0.85	1.00	0.98	
Flt Protected	0.95	1.00	1.00	0.95	1.00		0.95	1.00	1.00	0.95	1.00	
Satd. Flow (prot)	1770	1863	1794	3433	1677		3204	3539	1583	1770	3484	
Flt Permitted	0.95	1.00	1.00	0.95	1.00		0.95	1.00	1.00	0.95	1.00	
Satd. Flow (perm)	1770	1863	1794	3433	1677		3204	3539	1583	1770	3484	
Volume (vph)	202	37	264	382	34	67	157	319	522	70	440	51
Peak-hour factor, PHF	0.95	0.95	0.95	0.95	0.95	0.95	0.95	0.95	0.95	0.95	0.95	0.95
Adj. Flow (vph)	213	39	278	402	36	71	165	336	549	74	463	54
RTOR Reduction (vph)	0	0	236	0	63	0	0	0	335	0	9	0
Lane Group Flow (vph)	213	39	42	402	44	0	165	336	214	74	508	0
Confl. Peds. (#/hr)												
Turn Type	Prot		Perm	Prot			Prot		Perm	Prot		
Protected Phases	7	4		3	8		5	2		1	6	
Permitted Phases		4	4		8			2	2		6	
Actuated Green, G (s)	16.2	11.0	11.0	13.5	8.3		16.7	29.5	29.5	5.6	18.4	
Effective Green, g (s)	16.6	11.9	11.9	13.9	9.2		17.1	30.5	30.5	6.0	19.4	
Actuated g/C Ratio	0.21	0.15	0.15	0.18	0.12		0.22	0.39	0.39	0.08	0.25	
Clearance Time (s)	4.4	4.9	4.9	4.4	4.9		4.4	5.0	5.0	4.4	5.0	
Vehicle Extension (s)	3.0	3.0	3.0	3.0	3.0		3.0	3.0	3.0	3.0	3.0	
Lane Grp Cap (vph)	375	283	273	609	197		700	1379	617	136	863	
v/s Ratio Prot	0.12	0.02		c0.12	c0.03		0.05	0.09		c0.04	c0.15	
v/s Ratio Perm			c0.02						c0.14			
v/c Ratio	0.57	0.14	0.15	0.66	0.23		0.24	0.24	0.35	0.54	0.59	
Uniform Delay, d1	27.6	28.8	28.8	30.0	31.3		25.2	16.1	16.9	34.8	25.9	
Progression Factor	1.00	1.00	1.00	1.00	1.00		1.00	1.00	1.00	1.00	1.00	
Incremental Delay, d2	2.0	0.2	0.3	2.7	0.6		0.8	0.1	0.3	4.4	1.0	
Delay (s)	29.6	29.0	29.1	32.7	31.9		26.0	16.2	17.2	39.2	27.0	
Level of Service	C	C	C	C	C		C	B	B	D	C	
Approach Delay (s)		29.3			32.5			18.3			28.5	
Approach LOS		C			C			B			C	

Intersection Summary			
HCM Average Control Delay	25.4	HCM Level of Service	C
HCM Volume to Capacity ratio	0.53		
Actuated Cycle Length (s)	78.3	Sum of lost time (s)	24.0
Intersection Capacity Utilization	51.0%	ICU Level of Service	A
Analysis Period (min)	15		
c Critical Lane Group			

Movement	EBL	EBT	EBR	WBL	WBT	WBR	NBL	NBT	NBR	SBL	SBT	SBR
Lane Configurations												
Ideal Flow (vphpl)	1900	1900	1900	1900	1900	1900	1900	1900	1900	1900	1900	1900
Lane Width	10	12	16	12	12	12	11	12	12	10	12	12
Total Lost time (s)		4.0			4.0		4.0	4.0		4.0	4.0	
Lane Util. Factor		1.00			1.00		1.00	0.95		1.00	0.95	
Frt		0.93			0.93		1.00	0.98		1.00	0.99	
Flt Protected		0.98			0.98		0.95	1.00		0.95	1.00	
Satd. Flow (prot)		1693			1693		1711	3480		1652	3495	
Flt Permitted		0.98			0.98		0.95	1.00		0.95	1.00	
Satd. Flow (perm)		1693			1693		1711	3480		1652	3495	
Volume (vph)	114	5	129	90	3	99	67	624	78	152	687	63
Peak-hour factor, PHF	0.95	0.95	0.95	0.95	0.95	0.95	0.95	0.95	0.95	0.95	0.95	0.95
Adj. Flow (vph)	120	5	136	95	3	104	71	657	82	160	723	66
RTOR Reduction (vph)	0	44	0	0	37	0	0	9	0	0	7	0
Lane Group Flow (vph)	0	217	0	0	165	0	71	730	0	160	782	0
Turn Type	Split			Split			Prot			Prot		
Protected Phases	4	4		3	3		5	2		1	6	
Permitted Phases												
Actuated Green, G (s)		12.2			9.1		6.4	20.7		7.9	22.3	
Effective Green, g (s)		12.2			9.1		6.4	22.0		7.9	23.5	
Actuated g/C Ratio		0.18			0.14		0.10	0.33		0.12	0.35	
Clearance Time (s)		4.0			4.0		4.0	5.3		4.0	5.2	
Vehicle Extension (s)		3.0			3.0		3.0	3.0		3.0	3.0	
Lane Grp Cap (vph)		307			229		163	1139		194	1222	
v/s Ratio Prot		c0.13			c0.10		0.04	0.21		c0.10	c0.22	
v/s Ratio Perm												
v/c Ratio		0.71			0.72		0.44	0.64		0.82	0.64	
Uniform Delay, d1		25.8			27.8		28.7	19.2		29.0	18.3	
Progression Factor		1.00			1.00		1.00	1.00		1.00	1.00	
Incremental Delay, d2		7.2			10.3		1.9	1.2		23.9	1.2	
Delay (s)		33.0			38.2		30.6	20.5		52.8	19.5	
Level of Service		C			D		C	C		D	B	
Approach Delay (s)		33.0			38.2			21.4			25.1	
Approach LOS		C			D			C			C	

Intersection Summary			
HCM Average Control Delay	25.9	HCM Level of Service	C
HCM Volume to Capacity ratio	0.66		
Actuated Cycle Length (s)	67.2	Sum of lost time (s)	12.0
Intersection Capacity Utilization	56.3%	ICU Level of Service	B
Analysis Period (min)	15		
c Critical Lane Group			

Movement	EBL	EBT	EBR	WBL	WBT	WBR	NBL	NBT	NBR	SBL	SBT	SBR
Lane Configurations												
Ideal Flow (vphpl)	1900	1900	1900	1900	1900	1900	1900	1900	1900	1900	1900	1900
Lane Width	12	12	12	16	12	16	12	16	12	12	16	11
Total Lost time (s)					4.0	4.0	4.0	4.0			4.0	
Lane Util. Factor					1.00	1.00	1.00	1.00			0.95	
Frpb, ped/bikes					1.00	1.00	1.00	1.00			1.00	
Flpb, ped/bikes					1.00	1.00	1.00	1.00			1.00	
Frt					1.00	0.85	1.00	1.00			0.93	
Flt Protected					0.95	1.00	0.95	1.00			1.00	
Satd. Flow (prot)					1770	1794	1770	2111			3744	
Flt Permitted					0.95	1.00	0.95	1.00			1.00	
Satd. Flow (perm)					1770	1794	1770	2111			3744	
Volume (vph)	0	0	0	30	0	437	103	379	0	0	522	415
Peak-hour factor, PHF	0.95	0.95	0.95	0.95	0.95	0.95	0.95	0.95	0.95	0.95	0.95	0.95
Adj. Flow (vph)	0	0	0	32	0	460	108	399	0	0	549	437
RTOR Reduction (vph)	0	0	0	0	0	360	0	0	0	0	157	0
Lane Group Flow (vph)	0	0	0	0	32	100	108	399	0	0	829	0
Confl. Peds. (#/hr)												
Turn Type				Perm		Perm	Prot					
Protected Phases					6		3	8			4	
Permitted Phases				6		6						
Actuated Green, G (s)					8.9	8.9	4.7	25.3			16.1	
Effective Green, g (s)					9.4	9.4	5.2	25.8			16.6	
Actuated g/C Ratio					0.22	0.22	0.12	0.60			0.38	
Clearance Time (s)					4.5	4.5	4.5	4.5			4.5	
Vehicle Extension (s)					3.0	3.0	3.0	3.0			3.0	
Lane Grp Cap (vph)					385	390	213	1261			1439	
v/s Ratio Prot							c0.06	0.19			c0.22	
v/s Ratio Perm					0.02	c0.06						
v/c Ratio					0.08	0.26	0.51	0.32			0.58	
Uniform Delay, d1					13.5	14.0	17.8	4.3			10.5	
Progression Factor					1.00	1.00	1.00	1.00			1.00	
Incremental Delay, d2					0.1	0.4	1.9	0.1			0.6	
Delay (s)					13.6	14.4	19.7	4.5			11.1	
Level of Service					B	B	B	A			B	
Approach Delay (s)		0.0			14.3			7.7			11.1	
Approach LOS		A			B			A			B	

Intersection Summary			
HCM Average Control Delay	11.0	HCM Level of Service	B
HCM Volume to Capacity ratio	0.47		
Actuated Cycle Length (s)	43.2	Sum of lost time (s)	12.0
Intersection Capacity Utilization	64.6%	ICU Level of Service	C
Analysis Period (min)	15		
c Critical Lane Group			

Movement	EBL	EBT	EBR	WBL	WBT	WBR	NBL	NBT	NBR	SBL	SBT	SBR
Lane Configurations												
Ideal Flow (vphpl)	1900	1900	1900	1900	1900	1900	1900	1900	1900	1900	1900	1900
Lane Width	12	14	12	12	12	12	12	16	12	12	15	12
Total Lost time (s)		4.0	4.0					4.0		4.0	4.0	
Lane Util. Factor		1.00	1.00					1.00		1.00	1.00	
Frpb, ped/bikes		1.00	1.00					1.00		1.00	1.00	
Flpb, ped/bikes		1.00	1.00					1.00		1.00	1.00	
Frt		1.00	0.85					0.95		1.00	1.00	
Flt Protected		0.95	1.00					1.00		0.95	1.00	
Satd. Flow (prot)		1888	1583					2010		1770	2049	
Flt Permitted		0.95	1.00					1.00		0.95	1.00	
Satd. Flow (perm)		1888	1583					2010		1770	2049	
Volume (vph)	339	0	16	0	0	0	0	28	15	587	42	0
Peak-hour factor, PHF	0.95	0.95	0.95	0.95	0.95	0.95	0.95	0.95	0.95	0.95	0.95	0.95
Adj. Flow (vph)	357	0	17	0	0	0	0	29	16	618	44	0
RTOR Reduction (vph)	0	0	12	0	0	0	0	14	0	0	0	0
Lane Group Flow (vph)	0	357	5	0	0	0	0	31	0	618	44	0
Confl. Peds. (#/hr)												
Turn Type	Perm		Perm							Prot		
Protected Phases		4						2		1	6	
Permitted Phases	4		4									
Actuated Green, G (s)		16.3	16.3					4.6		26.2	35.0	
Effective Green, g (s)		17.3	17.3					5.9		26.4	36.3	
Actuated g/C Ratio		0.28	0.28					0.10		0.43	0.59	
Clearance Time (s)		5.0	5.0					5.3		4.2	5.3	
Vehicle Extension (s)		3.0	3.0					3.0		3.0	3.0	
Lane Grp Cap (vph)		530	445					193		759	1207	
v/s Ratio Prot								c0.02		c0.35	0.02	
v/s Ratio Perm		0.19	0.00									
v/c Ratio		0.67	0.01					0.16		0.81	0.04	
Uniform Delay, d1		19.6	16.0					25.6		15.4	5.3	
Progression Factor		1.00	1.00					1.00		1.00	1.00	
Incremental Delay, d2		3.4	0.0					0.4		6.7	0.0	
Delay (s)		23.0	16.0					26.0		22.1	5.3	
Level of Service		C	B					C		C	A	
Approach Delay (s)		22.7			0.0			26.0			21.0	
Approach LOS		C			A			C			C	

Intersection Summary				
HCM Average Control Delay	21.8	HCM Level of Service	C	
HCM Volume to Capacity ratio	0.69			
Actuated Cycle Length (s)	61.6	Sum of lost time (s)	12.0	
Intersection Capacity Utilization	64.6%	ICU Level of Service	C	
Analysis Period (min)	15			
c Critical Lane Group				

Movement	EBL	EBT	EBR	WBL	WBT	WBR	NBL	NBT	NBR	SBL	SBT	SBR
Lane Configurations												
Ideal Flow (vphpl)	1900	1900	1900	1900	1900	1900	1900	1900	1900	1900	1900	1900
Lane Width	12	12	14	12	12	12	10	12	12	12	12	12
Total Lost time (s)	4.0	4.0	4.0	4.0	4.0	4.0	4.0	4.0		4.0	4.0	
Lane Util. Factor	0.97	1.00	1.00	0.97	0.95	1.00	0.97	0.91		0.97	0.91	
Frpb, ped/bikes	1.00	1.00	1.00	1.00	1.00	1.00	1.00	1.00		1.00	1.00	
Flpb, ped/bikes	1.00	1.00	1.00	1.00	1.00	1.00	1.00	1.00		1.00	1.00	
Frt	1.00	1.00	0.85	1.00	1.00	0.85	1.00	0.96		1.00	0.98	
Flt Protected	0.95	1.00	1.00	0.95	1.00	1.00	0.95	1.00		0.95	1.00	
Satd. Flow (prot)	3433	1863	1689	3433	3539	1583	3204	4867		3433	4981	
Flt Permitted	0.95	1.00	1.00	0.70	1.00	1.00	0.95	1.00		0.17	1.00	
Satd. Flow (perm)	3433	1863	1689	2513	3539	1583	3204	4867		600	4981	
Volume (vph)	135	90	235	691	221	164	271	1026	412	16	794	125
Peak-hour factor, PHF	0.95	0.95	0.95	0.95	0.95	0.95	0.95	0.95	0.95	0.95	0.95	0.95
Adj. Flow (vph)	142	95	247	727	233	173	285	1080	434	17	836	132
RTOR Reduction (vph)	0	0	70	0	0	82	0	69	0	0	24	0
Lane Group Flow (vph)	142	95	177	727	233	91	285	1445	0	17	944	0
Confl. Peds. (#/hr)												
Turn Type	Prot		pm+ov	Perm		Perm	Prot			Perm		
Protected Phases	5	2	3		6		3	8			4	
Permitted Phases			2	6		6				4		
Actuated Green, G (s)	4.2	36.6	44.4	28.1	28.1	28.1	7.8	35.0		22.8	22.8	
Effective Green, g (s)	4.6	37.7	45.9	29.1	29.1	29.1	8.2	36.3		24.1	24.1	
Actuated g/C Ratio	0.06	0.46	0.56	0.35	0.35	0.35	0.10	0.44		0.29	0.29	
Clearance Time (s)	4.4	5.1	4.4	5.0	5.0	5.0	4.4	5.3		5.3	5.3	
Vehicle Extension (s)	3.0	3.0	3.0	3.0	3.0	3.0	3.0	3.0		3.0	3.0	
Lane Grp Cap (vph)	193	857	1028	892	1256	562	320	2155		176	1464	
v/s Ratio Prot	c0.04	0.05	0.02		0.07		c0.09	c0.30			0.19	
v/s Ratio Perm			0.09	c0.29		0.06				0.03		
v/c Ratio	0.74	0.11	0.17	0.82	0.19	0.16	0.89	0.67		0.10	0.64	
Uniform Delay, d1	38.1	12.6	8.8	24.0	18.3	18.1	36.5	18.1		21.0	25.2	
Progression Factor	1.00	1.00	1.00	1.00	1.00	1.00	1.00	1.00		1.00	1.00	
Incremental Delay, d2	13.6	0.1	0.1	5.8	0.1	0.1	25.0	0.8		0.2	1.0	
Delay (s)	51.7	12.7	8.9	29.8	18.3	18.2	61.5	18.9		21.3	26.2	
Level of Service	D	B	A	C	B	B	E	B		C	C	
Approach Delay (s)		22.2			25.7			25.7			26.1	
Approach LOS		C			C			C			C	

Intersection Summary				
HCM Average Control Delay	25.4	HCM Level of Service	C	
HCM Volume to Capacity ratio	0.75			
Actuated Cycle Length (s)	82.0	Sum of lost time (s)	12.0	
Intersection Capacity Utilization	70.1%	ICU Level of Service	C	
Analysis Period (min)	15			
c Critical Lane Group				

Movement	EBL	EBT	EBR	WBL	WBT	WBR	NBL	NBT	NBR	SBL	SBT	SBR
Lane Configurations												
Ideal Flow (vphpl)	1900	1900	1900	1900	1900	1900	1900	1900	1900	1900	1900	1900
Total Lost time (s)	4.0	4.0		4.0	4.0			4.0		4.0	4.0	
Lane Util. Factor	1.00	0.95		1.00	0.95			1.00		1.00	1.00	
Frt	1.00	1.00		1.00	1.00			0.98		1.00	0.86	
Flt Protected	0.95	1.00		0.95	1.00			0.97		0.95	1.00	
Satd. Flow (prot)	1770	3525		1770	3525			1759		1770	1595	
Flt Permitted	0.36	1.00		0.44	1.00			0.75		0.66	1.00	
Satd. Flow (perm)	668	3525		823	3525			1356		1221	1595	
Volume (vph)	41	446	12	6	580	16	111	26	30	118	5	112
Peak-hour factor, PHF	0.95	0.95	0.95	0.95	0.95	0.95	0.95	0.95	0.95	0.95	0.95	0.95
Adj. Flow (vph)	43	469	13	6	611	17	117	27	32	124	5	118
RTOR Reduction (vph)	0	2	0	0	2	0	0	9	0	0	70	0
Lane Group Flow (vph)	43	480	0	6	626	0	0	167	0	124	53	0
Turn Type	Perm			Perm			Perm			Perm		
Protected Phases		4			8			2			6	
Permitted Phases	4			8			2			6		
Actuated Green, G (s)	44.9	44.9		44.9	44.9			36.1		36.1	36.1	
Effective Green, g (s)	45.4	45.4		45.4	45.4			36.6		36.6	36.6	
Actuated g/C Ratio	0.50	0.50		0.50	0.50			0.41		0.41	0.41	
Clearance Time (s)	4.5	4.5		4.5	4.5			4.5		4.5	4.5	
Lane Grp Cap (vph)	337	1778		415	1778			551		497	649	
v/s Ratio Prot		0.14			c0.18						0.03	
v/s Ratio Perm	0.06			0.01				c0.12		0.10		
v/c Ratio	0.13	0.27		0.01	0.35			0.30		0.25	0.08	
Uniform Delay, d1	11.8	12.8		11.1	13.4			18.1		17.6	16.4	
Progression Factor	1.00	1.00		1.00	1.00			1.00		1.00	1.00	
Incremental Delay, d2	0.8	0.4		0.1	0.5			1.4		1.2	0.2	
Delay (s)	12.6	13.2		11.2	14.0			19.5		18.8	16.6	
Level of Service	B	B		B	B			B		B	B	
Approach Delay (s)		13.1			14.0			19.5			17.7	
Approach LOS		B			B			B			B	

Intersection Summary				
HCM Average Control Delay	14.9	HCM Level of Service	B	
HCM Volume to Capacity ratio	0.33			
Actuated Cycle Length (s)	90.0	Sum of lost time (s)	8.0	
Intersection Capacity Utilization	45.9%	ICU Level of Service	A	
Analysis Period (min)	15			
c Critical Lane Group				

Movement	EBT	EBR	WBL	WBT	NBL	NBR
Lane Configurations						
Ideal Flow (vphpl)	1900	1900	1900	1900	1900	1900
Total Lost time (s)	4.0			4.0	4.0	4.0
Lane Util. Factor	1.00			1.00	1.00	1.00
Frt	0.91			1.00	1.00	0.85
Flt Protected	1.00			0.98	0.95	1.00
Satd. Flow (prot)	1687			1830	1770	1583
Flt Permitted	1.00			0.87	0.95	1.00
Satd. Flow (perm)	1687			1624	1770	1583
Volume (vph)	15	35	6	10	40	15
Peak-hour factor, PHF	0.95	0.95	0.95	0.95	0.95	0.95
Adj. Flow (vph)	16	37	6	11	42	16
RTOR Reduction (vph)	34	0	0	0	0	3
Lane Group Flow (vph)	19	0	0	17	42	13
Turn Type			Perm			Perm
Protected Phases	4			8	2	
Permitted Phases			8			2
Actuated Green, G (s)	5.8			5.8	74.6	74.6
Effective Green, g (s)	6.3			6.3	75.1	75.1
Actuated g/C Ratio	0.07			0.07	0.84	0.84
Clearance Time (s)	4.5			4.5	4.5	4.5
Vehicle Extension (s)	3.0			3.0	3.0	3.0
Lane Grp Cap (vph)	119			114	1487	1330
v/s Ratio Prot	c0.01				c0.02	
v/s Ratio Perm				0.01		0.01
v/c Ratio	0.16			0.15	0.03	0.01
Uniform Delay, d1	39.1			39.0	1.2	1.2
Progression Factor	1.00			1.00	1.00	1.00
Incremental Delay, d2	0.6			0.6	0.0	0.0
Delay (s)	39.7			39.6	1.2	1.2
Level of Service	D			D	A	A
Approach Delay (s)	39.7			39.6	1.2	
Approach LOS	D			D	A	

Intersection Summary				
HCM Average Control Delay	22.2	HCM Level of Service	C	
HCM Volume to Capacity ratio	0.04			
Actuated Cycle Length (s)	89.4	Sum of lost time (s)	8.0	
Intersection Capacity Utilization	15.9%	ICU Level of Service	A	
Analysis Period (min)	15			
c Critical Lane Group				

Movement	EBL	EBT	EBR	WBL	WBT	WBR	NBL	NBT	NBR	SBL	SBT	SBR
Lane Configurations												
Ideal Flow (vphpl)	1900	1900	1900	1900	1900	1900	1900	1900	1900	1900	1900	1900
Total Lost time (s)	4.0	4.0		4.0	4.0		4.0	4.0		4.0	4.0	
Lane Util. Factor	1.00	0.95		1.00	0.95		1.00	1.00		1.00	1.00	
Frt	1.00	0.98		1.00	0.92		1.00	0.96		1.00	0.91	
Flt Protected	0.95	1.00		0.95	1.00		0.95	1.00		0.95	1.00	
Satd. Flow (prot)	1770	3455		1770	3261		1770	1780		1770	1692	
Flt Permitted	0.39	1.00		0.50	1.00		0.67	1.00		0.66	1.00	
Satd. Flow (perm)	726	3455		925	3261		1245	1780		1227	1692	
Volume (vph)	137	282	53	75	209	231	23	104	44	170	51	81
Peak-hour factor, PHF	0.95	0.95	0.95	0.95	0.95	0.95	0.95	0.95	0.95	0.95	0.95	0.95
Adj. Flow (vph)	144	297	56	79	220	243	24	109	46	179	54	85
RTOR Reduction (vph)	0	25	0	0	179	0	0	11	0	0	33	0
Lane Group Flow (vph)	144	328	0	79	284	0	24	144	0	179	106	0
Turn Type	Perm			Perm			Perm			Perm		
Protected Phases		4			8			2			6	
Permitted Phases	4			8			2			6		
Actuated Green, G (s)	16.0	16.0		16.0	16.0		37.9	37.9		37.9	37.9	
Effective Green, g (s)	16.5	16.5		16.5	16.5		38.4	38.4		38.4	38.4	
Actuated g/C Ratio	0.26	0.26		0.26	0.26		0.61	0.61		0.61	0.61	
Clearance Time (s)	4.5	4.5		4.5	4.5		4.5	4.5		4.5	4.5	
Vehicle Extension (s)	3.0	3.0		3.0	3.0		3.0	3.0		3.0	3.0	
Lane Grp Cap (vph)	190	906		243	855		760	1087		749	1033	
v/s Ratio Prot		0.09			0.09			0.08			0.06	
v/s Ratio Perm	c0.20			0.09			0.02			c0.15		
v/c Ratio	0.76	0.36		0.33	0.33		0.03	0.13		0.24	0.10	
Uniform Delay, d1	21.4	18.9		18.7	18.7		4.9	5.2		5.6	5.1	
Progression Factor	1.00	1.00		1.00	1.00		1.00	1.00		1.00	1.00	
Incremental Delay, d2	15.8	0.2		0.8	0.2		0.1	0.3		0.8	0.2	
Delay (s)	37.2	19.2		19.5	19.0		4.9	5.4		6.3	5.3	
Level of Service	D	B		B	B		A	A		A	A	
Approach Delay (s)		24.4			19.1			5.4			5.9	
Approach LOS		C			B			A			A	

Intersection Summary			
HCM Average Control Delay	16.5	HCM Level of Service	B
HCM Volume to Capacity ratio	0.39		
Actuated Cycle Length (s)	62.9	Sum of lost time (s)	8.0
Intersection Capacity Utilization	51.7%	ICU Level of Service	A
Analysis Period (min)	15		
c Critical Lane Group			

Movement	EBT	EBR	WBL	WBT	NBL	NBR
Lane Configurations						
Ideal Flow (vphpl)	1900	1900	1900	1900	1900	1900
Total Lost time (s)	4.0		4.0	4.0	4.0	4.0
Lane Util. Factor	0.95		1.00	0.95	1.00	1.00
Frt	0.96		1.00	1.00	1.00	0.85
Flt Protected	1.00		0.95	1.00	0.95	1.00
Satd. Flow (prot)	3384		1770	3539	1770	1583
Flt Permitted	1.00		0.40	1.00	0.95	1.00
Satd. Flow (perm)	3384		751	3539	1770	1583
Volume (vph)	324	134	214	32	483	196
Peak-hour factor, PHF	0.95	0.95	0.95	0.95	0.95	0.95
Adj. Flow (vph)	341	141	225	34	508	206
RTOR Reduction (vph)	63	0	0	0	0	93
Lane Group Flow (vph)	419	0	225	34	508	113
Turn Type			Perm			Perm
Protected Phases	4			8	2	
Permitted Phases			8			2
Actuated Green, G (s)	24.4		24.4	24.4	39.4	39.4
Effective Green, g (s)	24.9		24.9	24.9	39.9	39.9
Actuated g/C Ratio	0.34		0.34	0.34	0.55	0.55
Clearance Time (s)	4.5		4.5	4.5	4.5	4.5
Vehicle Extension (s)	3.0		3.0	3.0	3.0	3.0
Lane Grp Cap (vph)	1157		257	1210	970	868
v/s Ratio Prot	0.12			0.01	c0.29	
v/s Ratio Perm			c0.30			0.07
v/c Ratio	0.36		0.88	0.03	0.52	0.13
Uniform Delay, d1	18.0		22.5	15.9	10.4	8.0
Progression Factor	1.00		1.00	1.00	1.00	1.00
Incremental Delay, d2	0.2		26.5	0.0	2.0	0.3
Delay (s)	18.2		49.0	15.9	12.4	8.3
Level of Service	B		D	B	B	A
Approach Delay (s)	18.2			44.6	11.3	
Approach LOS	B			D	B	

Intersection Summary			
HCM Average Control Delay	19.5	HCM Level of Service	B
HCM Volume to Capacity ratio	0.66		
Actuated Cycle Length (s)	72.8	Sum of lost time (s)	8.0
Intersection Capacity Utilization	61.9%	ICU Level of Service	B
Analysis Period (min)	15		
c Critical Lane Group			

Movement	EBL	EBT	EBR	WBL	WBT	WBR	NBL	NBT	NBR	SBL	SBT	SBR
Lane Configurations												
Ideal Flow (vphpl)	1900	1900	1900	1900	1900	1900	1900	1900	1900	1900	1900	1900
Total Lost time (s)		4.0	4.0	4.0	4.0		4.0	4.0	4.0	4.0	4.0	
Lane Util. Factor		1.00	1.00	1.00	1.00		0.97	0.91	1.00	1.00	0.95	
Frt		1.00	0.85	1.00	0.94		1.00	1.00	0.85	1.00	0.99	
Flt Protected		0.97	1.00	0.95	1.00		0.95	1.00	1.00	0.95	1.00	
Satd. Flow (prot)		1799	1583	1770	1751		3433	5085	1583	1770	3510	
Flt Permitted		0.81	1.00	0.69	1.00		0.24	1.00	1.00	0.26	1.00	
Satd. Flow (perm)		1505	1583	1278	1751		859	5085	1583	483	3510	
Volume (vph)	67	28	301	132	9	6	301	917	120	139	881	51
Peak-hour factor, PHF	0.95	0.95	0.95	0.95	0.95	0.95	0.95	0.95	0.95	0.95	0.95	0.95
Adj. Flow (vph)	71	29	317	139	9	6	317	965	126	146	927	54
RTOR Reduction (vph)	0	0	106	0	4	0	0	0	48	0	4	0
Lane Group Flow (vph)	0	100	211	139	11	0	317	965	78	146	977	0
Turn Type	Perm		Perm	Perm			Perm		Perm	Perm		
Protected Phases		4			8			2			6	
Permitted Phases	4		4	8			2		2	6		
Actuated Green, G (s)		31.5	31.5	31.5	31.5		64.5	64.5	64.5	64.5	64.5	
Effective Green, g (s)		32.0	32.0	32.0	32.0		65.0	65.0	65.0	65.0	65.0	
Actuated g/C Ratio		0.30	0.30	0.30	0.30		0.62	0.62	0.62	0.62	0.62	
Clearance Time (s)		4.5	4.5	4.5	4.5		4.5	4.5	4.5	4.5	4.5	
Lane Grp Cap (vph)		459	482	389	534		532	3148	980	299	2173	
v/s Ratio Prot					0.01			0.19			0.28	
v/s Ratio Perm		0.07	c0.13	0.11			c0.37		0.05	0.30		
v/c Ratio		0.22	0.44	0.36	0.02		0.60	0.31	0.08	0.49	0.45	
Uniform Delay, d1		27.2	29.3	28.5	25.5		12.1	9.4	8.0	10.9	10.6	
Progression Factor		1.00	1.00	1.00	1.00		1.00	1.00	1.00	1.00	1.00	
Incremental Delay, d2		1.1	2.9	2.6	0.1		4.9	0.3	0.2	5.6	0.7	
Delay (s)		28.3	32.2	31.0	25.6		16.9	9.7	8.2	16.5	11.2	
Level of Service		C	C	C	C		B	A	A	B	B	
Approach Delay (s)		31.2			30.5			11.2			11.9	
Approach LOS		C			C			B			B	

Intersection Summary			
HCM Average Control Delay	15.1	HCM Level of Service	B
HCM Volume to Capacity ratio	0.54		
Actuated Cycle Length (s)	105.0	Sum of lost time (s)	8.0
Intersection Capacity Utilization	61.9%	ICU Level of Service	B
Analysis Period (min)	15		
c Critical Lane Group			

Movement	EBL	EBT	EBR	WBL	WBT	WBR	NBL	NBT	NBR	SBL	SBT	SBR
Lane Configurations												
Ideal Flow (vphpl)	1900	1900	1900	1900	1900	1900	1900	1900	1900	1900	1900	1900
Total Lost time (s)		4.0		4.0	4.0		4.0	4.0	4.0	4.0	4.0	
Lane Util. Factor		1.00		0.95	0.95		1.00	0.95	1.00	1.00	0.95	
Frt		0.92		1.00	0.85		1.00	1.00	0.85	1.00	0.99	
Flt Protected		0.98		0.95	1.00		0.95	1.00	1.00	0.95	1.00	
Satd. Flow (prot)		1680		1681	1504		1770	3539	1583	1770	3507	
Flt Permitted		0.91		0.75	1.00		0.39	1.00	1.00	0.39	1.00	
Satd. Flow (perm)		1567		1321	1504		735	3539	1583	727	3507	
Volume (vph)	25	0	35	20	0	15	20	525	43	16	487	31
Peak-hour factor, PHF	0.95	0.95	0.95	0.95	0.95	0.95	0.95	0.95	0.95	0.95	0.95	0.95
Adj. Flow (vph)	26	0	37	21	0	16	21	553	45	17	513	33
RTOR Reduction (vph)	0	21	0	0	9	0	0	0	23	0	5	0
Lane Group Flow (vph)	0	42	0	21	7	0	21	553	22	17	541	0
Turn Type	Perm			Perm			Perm		Perm	Perm		
Protected Phases		4			8			2			6	
Permitted Phases	4			8			2		2	6		
Actuated Green, G (s)		45.0		45.0	45.0		51.0	51.0	51.0	51.0	51.0	
Effective Green, g (s)		45.5		45.5	45.5		51.5	51.5	51.5	51.5	51.5	
Actuated g/C Ratio		0.43		0.43	0.43		0.49	0.49	0.49	0.49	0.49	
Clearance Time (s)		4.5		4.5	4.5		4.5	4.5	4.5	4.5	4.5	
Lane Grp Cap (vph)		679		572	652		361	1736	776	357	1720	
v/s Ratio Prot								c0.16			0.15	
v/s Ratio Perm		c0.03		0.02	0.00		0.03		0.01	0.02		
v/c Ratio		0.06		0.04	0.01		0.06	0.32	0.03	0.05	0.31	
Uniform Delay, d1		17.3		17.1	16.9		14.0	16.2	13.8	14.0	16.1	
Progression Factor		1.00		1.00	1.00		1.00	1.00	1.00	1.00	1.00	
Incremental Delay, d2		0.2		0.1	0.0		0.3	0.5	0.1	0.3	0.5	
Delay (s)		17.5		17.3	17.0		14.3	16.6	13.9	14.2	16.6	
Level of Service		B		B	B		B	B	B	B	B	
Approach Delay (s)		17.5			17.1			16.4			16.5	
Approach LOS		B			B			B			B	

Intersection Summary			
HCM Average Control Delay	16.5	HCM Level of Service	B
HCM Volume to Capacity ratio	0.20		
Actuated Cycle Length (s)	105.0	Sum of lost time (s)	8.0
Intersection Capacity Utilization	33.5%	ICU Level of Service	A
Analysis Period (min)	15		
c Critical Lane Group			

Movement	EBL	EBT	EBR	WBL	WBT	WBR	NBL	NBT	NBR	SBL	SBT	SBR
Lane Configurations												
Ideal Flow (vphpl)	1900	1900	1900	1900	1900	1900	1900	1900	1900	1900	1900	1900
Total Lost time (s)		4.0			4.0		4.0	4.0		4.0	4.0	
Lane Util. Factor		1.00			1.00		1.00	1.00		1.00	1.00	
Frt		0.88			0.99		1.00	0.99		1.00	1.00	
Flt Protected		1.00			0.96		0.95	1.00		0.95	1.00	
Satd. Flow (prot)		1638			1767		1770	1853		1770	1860	
Flt Permitted		0.98			0.73		0.31	1.00		0.29	1.00	
Satd. Flow (perm)		1612			1342		583	1853		542	1860	
Volume (vph)	24	16	267	30	4	4	39	556	20	10	542	5
Peak-hour factor, PHF	0.95	0.95	0.95	0.95	0.95	0.95	0.95	0.95	0.95	0.95	0.95	0.95
Adj. Flow (vph)	25	17	281	32	4	4	41	585	21	11	571	5
RTOR Reduction (vph)	0	180	0	0	3	0	0	1	0	0	0	0
Lane Group Flow (vph)	0	143	0	0	37	0	41	605	0	11	576	0
Turn Type	Perm			Perm			Perm			Perm		
Protected Phases		4			8			2			6	
Permitted Phases	4			8			2			6		
Actuated Green, G (s)		31.8			31.8		49.2	49.2		49.2	49.2	
Effective Green, g (s)		32.3			32.3		49.7	49.7		49.7	49.7	
Actuated g/C Ratio		0.36			0.36		0.55	0.55		0.55	0.55	
Clearance Time (s)		4.5			4.5		4.5	4.5		4.5	4.5	
Lane Grp Cap (vph)		579			482		322	1023		299	1027	
v/s Ratio Prot								c0.33			0.31	
v/s Ratio Perm		c0.09			0.03		0.07			0.02		
v/c Ratio		0.25			0.08		0.13	0.59		0.04	0.56	
Uniform Delay, d1		20.3			19.0		9.7	13.4		9.2	13.1	
Progression Factor		1.00			1.00		1.00	1.00		1.00	1.00	
Incremental Delay, d2		1.0			0.3		0.8	2.5		0.2	2.2	
Delay (s)		21.3			19.3		10.5	15.9		9.4	15.3	
Level of Service		C			B		B	B		A	B	
Approach Delay (s)		21.3			19.3			15.6			15.2	
Approach LOS		C			B			B			B	

Intersection Summary			
HCM Average Control Delay	16.7	HCM Level of Service	B
HCM Volume to Capacity ratio	0.46		
Actuated Cycle Length (s)	90.0	Sum of lost time (s)	8.0
Intersection Capacity Utilization	57.3%	ICU Level of Service	B
Analysis Period (min)	15		

c Critical Lane Group

Movement	EBL	EBT	EBR	WBL	WBT	WBR	NBL	NBT	NBR	SBL	SBT	SBR
Lane Configurations												
Ideal Flow (vphpl)	1900	1900	1900	1900	1900	1900	1900	1900	1900	1900	1900	1900
Total Lost time (s)	4.0	4.0	4.0		4.0		4.0	4.0		4.0	4.0	
Lane Util. Factor	1.00	1.00	1.00		1.00		1.00	1.00		1.00	1.00	
Frt	1.00	1.00	0.85		0.96		1.00	0.98		1.00	0.92	
Flt Protected	0.95	1.00	1.00		0.99		0.95	1.00		0.95	1.00	
Satd. Flow (prot)	1770	1863	1583		1775		1770	1831		1770	1712	
Flt Permitted	0.53	1.00	1.00		0.96		0.07	1.00		0.60	1.00	
Satd. Flow (perm)	982	1863	1583		1710		122	1831		1110	1712	
Volume (vph)	173	132	178	20	96	51	87	212	28	64	497	584
Peak-hour factor, PHF	0.95	0.95	0.95	0.95	0.95	0.95	0.95	0.95	0.95	0.95	0.95	0.95
Adj. Flow (vph)	182	139	187	21	101	54	92	223	29	67	523	615
RTOR Reduction (vph)	0	0	143	0	18	0	0	5	0	0	47	0
Lane Group Flow (vph)	182	139	44	0	158	0	92	247	0	67	1091	0
Turn Type	Perm		Perm	Perm			Perm			Perm		
Protected Phases		4			8			2			6	
Permitted Phases	4		4	8			2			6		
Actuated Green, G (s)	20.5	20.5	20.5		20.5		60.5	60.5		60.5	60.5	
Effective Green, g (s)	21.0	21.0	21.0		21.0		61.0	61.0		61.0	61.0	
Actuated g/C Ratio	0.23	0.23	0.23		0.23		0.68	0.68		0.68	0.68	
Clearance Time (s)	4.5	4.5	4.5		4.5		4.5	4.5		4.5	4.5	
Lane Grp Cap (vph)	229	435	369		399		83	1241		752	1160	
v/s Ratio Prot		0.07						0.13			0.64	
v/s Ratio Perm	c0.19		0.03		0.09		c0.75			0.06		
v/c Ratio	0.79	0.32	0.12		0.40		1.11	0.20		0.09	0.94	
Uniform Delay, d1	32.5	28.6	27.2		29.1		14.5	5.4		5.0	12.9	
Progression Factor	1.00	1.00	1.00		1.00		1.00	1.00		1.00	1.00	
Incremental Delay, d2	24.1	1.9	0.7		2.9		131.2	0.4		0.2	15.5	
Delay (s)	56.6	30.5	27.9		32.1		145.7	5.8		5.2	28.4	
Level of Service	E	C	C		C		F	A		A	C	
Approach Delay (s)		38.9			32.1			43.2			27.1	
Approach LOS		D			C			D			C	

Intersection Summary			
HCM Average Control Delay	32.7	HCM Level of Service	C
HCM Volume to Capacity ratio	1.03		
Actuated Cycle Length (s)	90.0	Sum of lost time (s)	8.0
Intersection Capacity Utilization	98.9%	ICU Level of Service	F
Analysis Period (min)	15		

c Critical Lane Group

Movement	EBL	EBT	EBR	WBL	WBT	WBR	NBL	NBT	NBR	SBL	SBT	SBR
Lane Configurations												
Ideal Flow (vphpl)	1900	1900	1900	1900	1900	1900	1900	1900	1900	1900	1900	1900
Total Lost time (s)	4.0	4.0	4.0	4.0	4.0		4.0	4.0	4.0	4.0	4.0	
Lane Util. Factor	1.00	0.95	1.00	1.00	0.95		0.95	0.95	1.00	1.00	1.00	
Frt	1.00	1.00	0.85	1.00	0.94		1.00	1.00	0.85	1.00	0.98	
Flt Protected	0.95	1.00	1.00	0.95	1.00		0.95	0.97	1.00	0.95	1.00	
Satd. Flow (prot)	1770	3539	1583	1770	3331		1681	1709	1583	1770	1825	
Flt Permitted	0.52	1.00	1.00	0.26	1.00		0.59	0.62	1.00	0.58	1.00	
Satd. Flow (perm)	971	3539	1583	480	3331		1040	1098	1583	1083	1825	
Volume (vph)	48	898	394	235	225	145	249	50	249	171	156	25
Peak-hour factor, PHF	0.95	0.95	0.95	0.95	0.95	0.95	0.95	0.95	0.95	0.95	0.95	0.95
Adj. Flow (vph)	51	945	415	247	237	153	262	53	262	180	164	26
RTOR Reduction (vph)	0	0	167	0	61	0	0	0	116	0	7	0
Lane Group Flow (vph)	51	945	248	247	329	0	131	184	146	180	183	0
Turn Type	Perm		Perm	Perm			Perm		Perm	Perm		
Protected Phases		4			8			2			6	
Permitted Phases	4		4	8			2		2	6		
Actuated Green, G (s)	36.7	36.7	36.7	36.7	36.7		16.5	16.5	16.5	16.5	16.5	
Effective Green, g (s)	37.2	37.2	37.2	37.2	37.2		17.0	17.0	17.0	17.0	17.0	
Actuated g/C Ratio	0.60	0.60	0.60	0.60	0.60		0.27	0.27	0.27	0.27	0.27	
Clearance Time (s)	4.5	4.5	4.5	4.5	4.5		4.5	4.5	4.5	4.5	4.5	
Vehicle Extension (s)	3.0	3.0	3.0	3.0	3.0		3.0	3.0	3.0	3.0	3.0	
Lane Grp Cap (vph)	581	2117	947	287	1992		284	300	433	296	499	
v/s Ratio Prot		0.27			0.10						0.10	
v/s Ratio Perm	0.05		0.16	c0.51			0.13	c0.17	0.09	0.17		
v/c Ratio	0.09	0.45	0.26	0.86	0.16		0.46	0.61	0.34	0.61	0.37	
Uniform Delay, d1	5.3	6.9	6.0	10.4	5.6		18.8	19.7	18.1	19.7	18.3	
Progression Factor	1.00	1.00	1.00	1.00	1.00		1.00	1.00	1.00	1.00	1.00	
Incremental Delay, d2	0.1	0.2	0.1	22.2	0.0		1.2	3.7	0.5	3.5	0.5	
Delay (s)	5.4	7.0	6.1	32.6	5.6		20.0	23.4	18.6	23.2	18.7	
Level of Service	A	A	A	C	A		B	C	B	C	B	
Approach Delay (s)		6.7			16.1			20.4			20.9	
Approach LOS		A			B			C			C	

Intersection Summary			
HCM Average Control Delay	13.1	HCM Level of Service	B
HCM Volume to Capacity ratio	0.78		
Actuated Cycle Length (s)	62.2	Sum of lost time (s)	8.0
Intersection Capacity Utilization	69.1%	ICU Level of Service	C
Analysis Period (min)	15		

c Critical Lane Group

APPENDIX G

PEAK HOUR INTERSECTION AND ARTERIAL ANALYSIS WORKSHEETS
OPENING DAY (2017) WITH CONNECTION CONDITIONS

2017 W/ Project AM
4: Friars Rd EB Ramps & Mission Center Rd 1/15/2015

Movement	EBL	EBT	EBR	WBL	WBT	WBR	NBL	NBT	NBR	SBL	SBT	SBR
Lane Configurations												
Ideal Flow (vphpl)	1900	1900	1900	1900	1900	1900	1900	1900	1900	1900	1900	1900
Lane Width	14	12	13	12	12	12	12	13	12	15	16	12
Total Lost time (s)	4.0	4.0	4.0					4.0		4.0	4.0	
Lane Util. Factor	0.95	0.95	1.00					0.95		0.97	0.95	
Frpb, ped/bikes	1.00	1.00	1.00					1.00		1.00	1.00	
Flpb, ped/bikes	1.00	1.00	1.00					1.00		1.00	1.00	
Frt	1.00	1.00	0.85					0.99		1.00	1.00	
Flt Protected	0.95	0.95	1.00					1.00		0.95	1.00	
Satd. Flow (prot)	1793	1681	1636					3629		3776	4011	
Flt Permitted	0.95	0.95	1.00					1.00		0.95	1.00	
Satd. Flow (perm)	1793	1681	1636					3629		3776	4011	
Volume (vph)	281	0	161	0	0	0	0	432	24	320	369	0
Peak-hour factor, PHF	0.95	0.95	0.95	0.95	0.95	0.95	0.95	0.95	0.95	0.95	0.95	0.95
Adj. Flow (vph)	296	0	169	0	0	0	0	455	25	337	388	0
RTOR Reduction (vph)	0	0	132	0	0	0	0	4	0	0	0	0
Lane Group Flow (vph)	149	147	37	0	0	0	0	476	0	337	388	0
Confl. Peds. (#/hr)												
Turn Type	Split		Perm							Prot		
Protected Phases	4	4						2		1	6	
Permitted Phases			4									
Actuated Green, G (s)	7.3	7.3	7.3					8.8		7.0	19.6	
Effective Green, g (s)	8.2	8.2	8.2					9.8		7.4	21.2	
Actuated g/C Ratio	0.22	0.22	0.22					0.26		0.20	0.57	
Clearance Time (s)	4.9	4.9	4.9					5.0		4.4	5.6	
Vehicle Extension (s)	3.0	3.0	3.0					3.0		3.0	3.0	
Lane Grp Cap (vph)	393	369	359					951		747	2274	
v/s Ratio Prot	0.08	c0.09						c0.13		c0.09	0.10	
v/s Ratio Perm			0.02									
v/c Ratio	0.38	0.40	0.10					0.50		0.45	0.17	
Uniform Delay, d1	12.4	12.5	11.7					11.7		13.2	3.9	
Progression Factor	1.00	1.00	1.00					1.00		1.00	1.00	
Incremental Delay, d2	0.6	0.7	0.1					0.4		0.4	0.0	
Delay (s)	13.0	13.2	11.8					12.1		13.6	3.9	
Level of Service	B	B	B					B		B	A	
Approach Delay (s)		12.6			0.0			12.1			8.4	
Approach LOS		B			A			B			A	

Intersection Summary				
HCM Average Control Delay	10.7	HCM Level of Service	B	
HCM Volume to Capacity ratio	0.45			
Actuated Cycle Length (s)	37.4	Sum of lost time (s)	12.0	
Intersection Capacity Utilization	39.6%	ICU Level of Service	A	
Analysis Period (min)	15			
c Critical Lane Group				

2017 W/ Project AM
5: Friars Rd WB Ramps & Mission Center Rd 1/15/2015

Movement	EBL	EBT	EBR	WBL	WBT	WBR	NBL	NBT	NBR	SBL	SBT	SBR
Lane Configurations												
Ideal Flow (vphpl)	1900	1900	1900	1900	1900	1900	1900	1900	1900	1900	1900	1900
Lane Width	12	12	12	15	12	15	10	12	12	12	14	11
Total Lost time (s)				4.0	4.0	4.0	4.0	4.0			4.0	4.0
Lane Util. Factor				0.95	0.95	1.00	0.97	0.95			0.95	1.00
Frpb, ped/bikes				1.00	1.00	1.00	1.00	1.00			1.00	1.00
Flpb, ped/bikes				1.00	1.00	1.00	1.00	1.00			1.00	1.00
Frt				1.00	1.00	0.85	1.00	1.00			1.00	0.85
Flt Protected				0.95	0.95	1.00	0.95	1.00			1.00	1.00
Satd. Flow (prot)				1849	1681	1742	3204	3539			3775	1531
Flt Permitted				0.95	0.95	1.00	0.95	1.00			1.00	1.00
Satd. Flow (perm)				1849	1681	1742	3204	3539			3775	1531
Volume (vph)	0	0	0	141	0	249	127	607	0	0	541	195
Peak-hour factor, PHF	0.95	0.95	0.95	0.95	0.95	0.95	0.95	0.95	0.95	0.95	0.95	0.95
Adj. Flow (vph)	0	0	0	148	0	262	134	639	0	0	569	205
RTOR Reduction (vph)	0	0	0	0	0	165	0	0	0	0	0	126
Lane Group Flow (vph)	0	0	0	76	72	97	134	639	0	0	569	79
Confl. Peds. (#/hr)												
Turn Type				Split		Perm	Prot					Perm
Protected Phases				8	8		5	2			6	
Permitted Phases						8						6
Actuated Green, G (s)				7.8	7.8	7.8	5.6	25.6			14.6	14.6
Effective Green, g (s)				8.7	8.7	8.7	6.0	26.6			16.6	16.6
Actuated g/C Ratio				0.20	0.20	0.20	0.14	0.61			0.38	0.38
Clearance Time (s)				4.9	4.9	4.9	4.4	5.0			6.0	6.0
Vehicle Extension (s)				3.0	3.0	3.0	3.0	3.0			3.0	3.0
Lane Grp Cap (vph)				372	338	350	444	2174			1447	587
v/s Ratio Prot				0.04	0.04		0.04	c0.18			c0.15	
v/s Ratio Perm						c0.06						0.05
v/c Ratio				0.20	0.21	0.28	0.30	0.29			0.39	0.13
Uniform Delay, d1				14.4	14.4	14.6	16.8	3.9			9.7	8.7
Progression Factor				1.00	1.00	1.00	1.00	1.00			1.00	1.00
Incremental Delay, d2				0.3	0.3	0.4	0.4	0.1			0.2	0.1
Delay (s)				14.7	14.8	15.1	17.2	4.0			9.9	8.8
Level of Service				B	B	B	B	A			A	A
Approach Delay (s)		0.0			15.0			6.3			9.6	
Approach LOS		A			B			A			A	

Intersection Summary				
HCM Average Control Delay	9.4	HCM Level of Service	A	
HCM Volume to Capacity ratio	0.36			
Actuated Cycle Length (s)	43.3	Sum of lost time (s)	12.0	
Intersection Capacity Utilization	39.6%	ICU Level of Service	A	
Analysis Period (min)	15			
c Critical Lane Group				

2017 W/ Project AM
7: Friars Rd EB Ramps & Qualcomm Wy 1/15/2015

Movement	EBL	EBT	EBR	WBL	WBT	WBR	NBL	NBT	NBR	SBL	SBT	SBR
Lane Configurations												
Ideal Flow (vphpl)	1900	1900	1900	1900	1900	1900	1900	1900	1900	1900	1900	1900
Lane Width	12	11	14	12	12	12	12	12	15	12	12	12
Total Lost time (s)		4.0	4.0					4.0	4.0	4.0	4.0	
Lane Util. Factor		1.00	1.00					0.95	1.00	1.00	0.95	
Frpb, ped/bikes		1.00	1.00					1.00	1.00	1.00	1.00	
Flpb, ped/bikes		1.00	1.00					1.00	1.00	1.00	1.00	
Frt		1.00	0.85					1.00	0.85	1.00	1.00	
Flt Protected		0.95	1.00					1.00	1.00	0.95	1.00	
Satd. Flow (prot)		1711	1689					3539	1742	1770	3539	
Flt Permitted		0.95	1.00					1.00	1.00	0.95	1.00	
Satd. Flow (perm)		1711	1689					3539	1742	1770	3539	
Volume (vph)	89	0	133	0	0	0	0	544	226	155	509	0
Peak-hour factor, PHF	0.95	0.95	0.95	0.95	0.95	0.95	0.95	0.95	0.95	0.95	0.95	0.95
Adj. Flow (vph)	94	0	140	0	0	0	0	573	238	163	536	0
RTOR Reduction (vph)	0	0	117	0	0	0	0	0	107	0	0	0
Lane Group Flow (vph)	0	94	23	0	0	0	0	573	131	163	536	0
Confl. Peds. (#/hr)												
Turn Type	Split		Perm						Perm	Prot		
Protected Phases	4	4						2		1	6	
Permitted Phases			4						2			
Actuated Green, G (s)		13.7	13.7					48.6	48.6	13.3	66.5	
Effective Green, g (s)		14.6	14.6					49.7	49.7	13.7	67.4	
Actuated g/C Ratio		0.16	0.16					0.55	0.55	0.15	0.75	
Clearance Time (s)		4.9	4.9					5.1	5.1	4.4	4.9	
Vehicle Extension (s)		3.0	3.0					3.0	3.0	3.0	3.0	
Lane Grp Cap (vph)		278	274					1954	962	269	2650	
v/s Ratio Prot		c0.05						c0.16		c0.09	0.15	
v/s Ratio Perm			0.01						0.08			
v/c Ratio		0.34	0.08					0.29	0.14	0.61	0.20	
Uniform Delay, d1		33.4	32.0					10.8	9.8	35.6	3.3	
Progression Factor		1.00	1.00					1.00	1.00	0.77	1.99	
Incremental Delay, d2		0.7	0.1					0.4	0.3	2.6	0.1	
Delay (s)		34.1	32.1					11.1	10.1	30.0	6.8	
Level of Service		C	C					B	B	C	A	
Approach Delay (s)		32.9			0.0			10.8			12.2	
Approach LOS		C			A			B			B	

Intersection Summary				
HCM Average Control Delay	14.3	HCM Level of Service	B	
HCM Volume to Capacity ratio	0.36			
Actuated Cycle Length (s)	90.0	Sum of lost time (s)	12.0	
Intersection Capacity Utilization	60.7%	ICU Level of Service	B	
Analysis Period (min)	15			
c Critical Lane Group				

2017 W/ Project AM
8: Friars Rd WB Ramps & Qualcomm Wy 1/15/2015

Movement	EBL	EBT	EBR	WBL	WBT	WBR	NBL	NBT	NBR	SBL	SBT	SBR
Lane Configurations												
Ideal Flow (vphpl)	1900	1900	1900	1900	1900	1900	1900	1900	1900	1900	1900	1900
Lane Width	12	12	12	12	16	12	12	11	12	12	16	16
Total Lost time (s)				4.0	4.0		4.0	4.0			4.0	
Lane Util. Factor				0.95	0.95		1.00	1.00			0.95	
Frpb, ped/bikes				1.00	1.00		1.00	1.00			1.00	
Flpb, ped/bikes				1.00	1.00		1.00	1.00			1.00	
Frt				1.00	0.90		1.00	1.00			0.96	
Flt Protected				0.95	0.98		0.95	1.00			1.00	
Satd. Flow (prot)				1681	1782		1770	1801			3855	
Flt Permitted				0.95	0.98		0.95	1.00			1.00	
Satd. Flow (perm)				1681	1782		1770	1801			3855	
Volume (vph)	0	0	0	274	0	128	372	279	0	0	492	172
Peak-hour factor, PHF	0.95	0.95	0.95	0.95	0.95	0.95	0.95	0.95	0.95	0.95	0.95	0.95
Adj. Flow (vph)	0	0	0	288	0	135	392	294	0	0	518	181
RTOR Reduction (vph)	0	0	0	0	82	0	0	0	0	0	39	0
Lane Group Flow (vph)	0	0	0	210	131	0	392	294	0	0	660	0
Confl. Peds. (#/hr)												
Turn Type				Split			Prot					
Protected Phases				8	8		5	2			6	
Permitted Phases												
Actuated Green, G (s)				16.9	16.9		39.3	63.1			19.1	
Effective Green, g (s)				17.8	17.8		40.2	64.2			20.0	
Actuated g/C Ratio				0.20	0.20		0.45	0.71			0.22	
Clearance Time (s)				4.9	4.9		4.9	5.1			4.9	
Vehicle Extension (s)				3.0	3.0		3.0	3.0			3.0	
Lane Grp Cap (vph)				332	352		791	1285			857	
v/s Ratio Prot				c0.12	0.07		c0.22	0.16			c0.17	
v/s Ratio Perm												
v/c Ratio				0.63	0.37		0.50	0.23			0.77	
Uniform Delay, d1				33.1	31.3		17.7	4.4			32.8	
Progression Factor				1.00	1.00		0.73	0.50			1.00	
Incremental Delay, d2				3.9	0.7		2.2	0.4			4.3	
Delay (s)				37.0	31.9		15.1	2.6			37.2	
Level of Service				D	C		B	A			D	
Approach Delay (s)		0.0			34.4			9.8			37.2	
Approach LOS		A			C			A			D	

Intersection Summary				
HCM Average Control Delay	26.1	HCM Level of Service	C	
HCM Volume to Capacity ratio	0.60			
Actuated Cycle Length (s)	90.0	Sum of lost time (s)	12.0	
Intersection Capacity Utilization	60.7%	ICU Level of Service	B	
Analysis Period (min)	15			
c Critical Lane Group				

Movement	EBT	EBR	WBL	WBT	NBL	NBR
Lane Configurations						
Ideal Flow (vphpl)	1900	1900	1900	1900	1900	1900
Total Lost time (s)	4.0	4.0	4.0	4.0	4.0	4.0
Lane Util. Factor	0.95	1.00	0.97	1.00	0.97	1.00
Frt	1.00	0.85	1.00	1.00	1.00	0.85
Flt Protected	1.00	1.00	0.95	1.00	0.95	1.00
Satd. Flow (prot)	3539	1583	3433	1863	3433	1583
Flt Permitted	1.00	1.00	0.61	1.00	0.95	1.00
Satd. Flow (perm)	3539	1583	2192	1863	3433	1583
Volume (vph)	221	237	339	118	96	158
Peak-hour factor, PHF	0.95	0.95	0.95	0.95	0.95	0.95
Adj. Flow (vph)	233	249	357	124	101	166
RTOR Reduction (vph)	0	186	0	0	0	64
Lane Group Flow (vph)	233	63	357	124	101	102
Turn Type		Perm	Perm			Perm
Protected Phases	4			8	2	
Permitted Phases		4	8			2
Actuated Green, G (s)	14.8	14.8	14.8	14.8	36.2	36.2
Effective Green, g (s)	15.3	15.3	15.3	15.3	36.7	36.7
Actuated g/C Ratio	0.26	0.26	0.26	0.26	0.61	0.61
Clearance Time (s)	4.5	4.5	4.5	4.5	4.5	4.5
Vehicle Extension (s)	3.0	3.0	3.0	3.0	3.0	3.0
Lane Grp Cap (vph)	902	404	559	475	2100	968
v/s Ratio Prot	0.07			0.07	0.03	
v/s Ratio Perm		0.04	c0.16			c0.06
v/c Ratio	0.26	0.16	0.64	0.26	0.05	0.10
Uniform Delay, d1	17.8	17.3	19.9	17.8	4.7	4.8
Progression Factor	1.00	1.00	1.00	1.00	1.00	1.00
Incremental Delay, d2	0.2	0.2	2.4	0.3	0.0	0.2
Delay (s)	18.0	17.5	22.3	18.1	4.7	5.1
Level of Service	B	B	C	B	A	A
Approach Delay (s)	17.7			21.2	4.9	
Approach LOS	B			C	A	

Intersection Summary			
HCM Average Control Delay	16.3	HCM Level of Service	B
HCM Volume to Capacity ratio	0.26		
Actuated Cycle Length (s)	60.0	Sum of lost time (s)	8.0
Intersection Capacity Utilization	31.0%	ICU Level of Service	A
Analysis Period (min)	15		
c Critical Lane Group			

Movement	EBL	EBT	EBR	WBL	WBT	WBR	NBL	NBT	NBR	SBL	SBT	SBR
Lane Configurations												
Ideal Flow (vphpl)	1900	1900	1900	1900	1900	1900	1900	1900	1900	1900	1900	1900
Lane Width	14	12	12	10	12	12	12	11	13	12	15	10
Total Lost time (s)	4.0	4.0		4.0	4.0			4.0	4.0		4.0	
Lane Util. Factor	1.00	0.91		1.00	0.91			1.00	1.00		1.00	
Frt	1.00	1.00		1.00	0.98			1.00	0.85		0.96	
Flt Protected	0.95	1.00		0.95	1.00			0.96	1.00		0.97	
Satd. Flow (prot)	1888	5065		1652	4990			1737	1636		1923	
Flt Permitted	0.95	1.00		0.95	1.00			0.77	1.00		0.80	
Satd. Flow (perm)	1888	5065		1652	4990			1387	1636		1578	
Volume (vph)	90	699	19	138	1235	176	68	26	42	12	4	6
Peak-hour factor, PHF	0.95	0.95	0.95	0.95	0.95	0.95	0.95	0.95	0.95	0.95	0.95	0.95
Adj. Flow (vph)	95	736	20	145	1300	185	72	27	44	13	4	6
RTOR Reduction (vph)	0	2	0	0	12	0	0	0	38	0	5	0
Lane Group Flow (vph)	95	754	0	145	1473	0	0	99	6	0	18	0
Turn Type	Prot			Prot			Perm		Perm	Perm		
Protected Phases	5	2		1	6			8			4	
Permitted Phases							8		8	4		
Actuated Green, G (s)	4.7	25.6		9.1	30.0			6.8	6.8		6.8	
Effective Green, g (s)	5.1	27.8		9.5	32.2			7.7	7.7		7.7	
Actuated g/C Ratio	0.09	0.49		0.17	0.56			0.14	0.14		0.14	
Clearance Time (s)	4.4	6.2		4.4	6.2			4.9	4.9		4.9	
Vehicle Extension (s)	3.0	3.0		3.0	3.0			3.0	3.0		3.0	
Lane Grp Cap (vph)	169	2470		275	2819			187	221		213	
v/s Ratio Prot	0.05	0.15		c0.09	c0.30							
v/s Ratio Perm								c0.07	0.00		0.01	
v/c Ratio	0.56	0.31		0.53	0.52			0.53	0.03		0.08	
Uniform Delay, d1	24.9	8.8		21.7	7.7			23.0	21.4		21.6	
Progression Factor	1.00	1.00		1.00	1.00			1.00	1.00		1.00	
Incremental Delay, d2	4.2	0.1		1.8	0.2			2.7	0.0		0.2	
Delay (s)	29.1	8.9		23.5	7.8			25.7	21.4		21.7	
Level of Service	C	A		C	A			C	C		C	
Approach Delay (s)		11.1			9.2			24.4			21.7	
Approach LOS		B			A			C			C	

Intersection Summary			
HCM Average Control Delay	10.8	HCM Level of Service	B
HCM Volume to Capacity ratio	0.51		
Actuated Cycle Length (s)	57.0	Sum of lost time (s)	8.0
Intersection Capacity Utilization	50.7%	ICU Level of Service	A
Analysis Period (min)	15		
c Critical Lane Group			

Movement	EBL	EBT	EBR	WBL	WBT	WBR	NBL	NBT	NBR	SBL	SBT	SBR
Lane Configurations												
Ideal Flow (vphpl)	1900	1900	1900	1900	1900	1900	1900	1900	1900	1900	1900	1900
Lane Width	12	12	14	10	12	12	9	12	16	12	12	12
Total Lost time (s)	4.0	4.0	4.0	4.0	4.0	4.0	4.0	4.0	4.0	4.0	4.0	4.0
Lane Util. Factor	1.00	0.91	1.00	0.97	0.91	1.00	0.97	1.00	1.00	0.97	0.95	0.95
Frpb, ped/bikes	1.00	1.00	1.00	1.00	1.00	1.00	1.00	1.00	1.00	1.00	1.00	1.00
Flpb, ped/bikes	1.00	1.00	1.00	1.00	1.00	1.00	1.00	1.00	1.00	1.00	1.00	1.00
Frt	1.00	1.00	0.85	1.00	1.00	0.85	1.00	1.00	0.85	1.00	0.89	0.85
Flt Protected	0.95	1.00	1.00	0.95	1.00	1.00	0.95	1.00	1.00	0.95	1.00	1.00
Satd. Flow (prot)	1770	5085	1689	3204	5085	1583	3090	1863	1794	3433	1583	1504
Flt Permitted	0.95	1.00	1.00	0.95	1.00	1.00	0.95	1.00	1.00	0.95	1.00	1.00
Satd. Flow (perm)	1770	5085	1689	3204	5085	1583	3090	1863	1794	3433	1583	1504
Volume (vph)	24	640	29	194	1482	22	75	5	101	92	25	144
Peak-hour factor, PHF	0.95	0.95	0.95	0.95	0.95	0.95	0.95	0.95	0.95	0.95	0.95	0.95
Adj. Flow (vph)	25	674	31	204	1560	23	79	5	106	97	26	152
RTOR Reduction (vph)	0	0	12	0	0	7	0	0	94	0	54	19
Lane Group Flow (vph)	25	674	19	204	1560	16	79	5	12	97	34	71
Confl. Peds. (#/hr)												
Turn Type	Prot		pm+ov	Prot		pm+ov	Prot		Perm	Prot		pm+ov
Protected Phases	5	2	3	1	6	7	3	8		7	4	5
Permitted Phases			2			6			8			4
Actuated Green, G (s)	5.2	64.8	69.3	11.7	71.3	77.8	4.5	12.1	12.1	6.5	14.1	19.3
Effective Green, g (s)	5.6	67.0	71.9	12.1	73.5	80.4	4.9	13.0	13.0	6.9	15.0	20.6
Actuated g/C Ratio	0.05	0.58	0.63	0.11	0.64	0.70	0.04	0.11	0.11	0.06	0.13	0.18
Clearance Time (s)	4.4	6.2	4.4	4.4	6.2	4.4	4.4	4.9	4.9	4.4	4.9	4.4
Vehicle Extension (s)	3.0	3.0	3.0	3.0	3.0	3.0	3.0	3.0	3.0	3.0	3.0	3.0
Lane Grp Cap (vph)	86	2963	1115	337	3250	1162	132	211	203	206	206	322
v/s Ratio Prot	0.01	0.13	0.00	c0.06	c0.31	0.00	0.03	0.00		c0.03	0.02	c0.01
v/s Ratio Perm			0.01			0.01			0.01			0.04
v/c Ratio	0.29	0.23	0.02	0.61	0.48	0.01	0.60	0.02	0.06	0.47	0.17	0.22
Uniform Delay, d1	52.8	11.5	8.2	49.2	10.8	5.3	54.1	45.4	45.5	52.3	44.4	40.3
Progression Factor	1.00	1.00	1.00	1.00	1.00	1.00	1.00	1.00	1.00	1.00	1.00	1.00
Incremental Delay, d2	1.9	0.2	0.0	3.1	0.5	0.0	7.1	0.0	0.1	1.7	0.4	0.3
Delay (s)	54.7	11.7	8.2	52.2	11.3	5.3	61.2	45.4	45.7	54.0	44.8	40.7
Level of Service	D	B	A	D	B	A	E	D	D	D	D	D
Approach Delay (s)		13.0			15.9			52.1			46.7	
Approach LOS		B			B			D			D	

Intersection Summary			
HCM Average Control Delay	20.4	HCM Level of Service	C
HCM Volume to Capacity ratio	0.44		
Actuated Cycle Length (s)	115.0	Sum of lost time (s)	8.0
Intersection Capacity Utilization	51.3%	ICU Level of Service	A
Analysis Period (min)	15		
c Critical Lane Group			

Movement	EBL	EBT	EBR	WBL	WBT	WBR	NBL	NBT	NBR	SBL	SBT	SBR
Lane Configurations												
Ideal Flow (vphpl)	1900	1900	1900	1900	1900	1900	1900	1900	1900	1900	1900	1900
Lane Width	10	12	16	10	13	12	11	16	12	11	15	12
Total Lost time (s)	4.0	4.0	4.0	4.0	4.0	4.0	4.0	4.0	4.0	4.0	4.0	4.0
Lane Util. Factor	0.97	0.91	1.00	0.97	0.91	1.00	0.97	1.00	1.00	0.97	1.00	1.00
Frpb, ped/bikes	1.00	1.00	1.00	1.00	1.00	1.00	1.00	1.00	1.00	1.00	1.00	1.00
Flpb, ped/bikes	1.00	1.00	1.00	1.00	1.00	1.00	1.00	1.00	1.00	1.00	1.00	1.00
Frt	1.00	1.00	0.85	1.00	1.00	0.85	1.00	1.00	0.85	1.00	1.00	0.85
Flt Protected	0.95	1.00	1.00	0.95	1.00	1.00	0.95	1.00	1.00	0.95	1.00	1.00
Satd. Flow (prot)	3204	5085	1794	3204	5255	1583	3319	2111	1583	3319	2049	1583
Flt Permitted	0.95	1.00	1.00	0.95	1.00	1.00	0.95	1.00	1.00	0.95	1.00	1.00
Satd. Flow (perm)	3204	5085	1794	3204	5255	1583	3319	2111	1583	3319	2049	1583
Volume (vph)	33	615	216	419	1210	32	78	3	174	162	31	105
Peak-hour factor, PHF	0.95	0.95	0.95	0.95	0.95	0.95	0.95	0.95	0.95	0.95	0.95	0.95
Adj. Flow (vph)	35	647	227	441	1274	34	82	3	183	171	33	111
RTOR Reduction (vph)	0	0	154	0	0	12	0	0	33	0	0	92
Lane Group Flow (vph)	35	647	73	441	1274	22	82	3	150	171	33	19
Confl. Peds. (#/hr)												
Turn Type	Prot		Perm	Prot		pm+ov	Prot		pm+ov	Prot		Perm
Protected Phases	5	2		1	6	7	3	8	1	7	4	
Permitted Phases			2			6			8			4
Actuated Green, G (s)	2.1	19.8	19.8	14.7	32.2	42.1	3.2	4.0	18.7	9.9	10.7	10.7
Effective Green, g (s)	2.5	21.8	21.8	15.1	34.4	44.7	3.6	4.9	20.0	10.3	11.6	11.6
Actuated g/C Ratio	0.04	0.32	0.32	0.22	0.51	0.66	0.05	0.07	0.29	0.15	0.17	0.17
Clearance Time (s)	4.4	6.0	6.0	4.4	6.2	4.4	4.4	4.9	4.4	4.4	4.9	4.9
Vehicle Extension (s)	3.0	3.0	3.0	3.0	3.0	3.0	3.0	3.0	3.0	3.0	3.0	3.0
Lane Grp Cap (vph)	118	1628	574	710	2655	1132	175	152	558	502	349	270
v/s Ratio Prot	0.01	0.13		c0.14	c0.24	0.00	0.02	0.00	c0.06	c0.05	0.02	
v/s Ratio Perm			0.04			0.01			0.04			0.01
v/c Ratio	0.30	0.40	0.13	0.62	0.48	0.02	0.47	0.02	0.27	0.34	0.09	0.07
Uniform Delay, d1	31.9	18.0	16.4	23.9	11.0	4.1	31.3	29.4	18.4	25.9	23.8	23.7
Progression Factor	1.00	1.00	1.00	1.00	1.00	1.00	1.00	1.00	1.00	1.00	1.00	1.00
Incremental Delay, d2	1.4	0.2	0.1	1.7	0.1	0.0	2.0	0.1	0.3	0.4	0.1	0.1
Delay (s)	33.4	18.2	16.5	25.6	11.1	4.1	33.3	29.4	18.7	26.3	23.9	23.8
Level of Service	C	B	B	C	B	A	C	C	B	C	C	C
Approach Delay (s)		18.4			14.7			23.3			25.2	
Approach LOS		B			B			C			C	

Intersection Summary			
HCM Average Control Delay	17.4	HCM Level of Service	B
HCM Volume to Capacity ratio	0.47		
Actuated Cycle Length (s)	68.1	Sum of lost time (s)	12.0
Intersection Capacity Utilization	48.0%	ICU Level of Service	A
Analysis Period (min)	15		
c Critical Lane Group			

Movement	EBL	EBT	EBR	WBL	WBT	WBR	NBL	NBT	NBR	SBL	SBT	SBR
Lane Configurations												
Ideal Flow (vphpl)	1900	1900	1900	1900	1900	1900	1900	1900	1900	1900	1900	1900
Lane Width	12	10	12	12	16	12	12	16	12	12	16	12
Total Lost time (s)		4.0	4.0		4.0		4.0	4.0		4.0	4.0	4.0
Lane Util. Factor		1.00	1.00		1.00		1.00	1.00		1.00	1.00	1.00
Frpb, ped/bikes		1.00	1.00		1.00		1.00	1.00		1.00	1.00	1.00
Flpb, ped/bikes		1.00	1.00		1.00		1.00	1.00		1.00	1.00	1.00
Frt		1.00	0.85		0.99		1.00	0.98		1.00	1.00	0.85
Flt Protected		0.97	1.00		0.96		0.95	1.00		0.95	1.00	1.00
Satd. Flow (prot)		1680	1583		2019		1770	2072		1770	2111	1583
Flt Permitted		0.97	1.00		0.96		0.95	1.00		0.95	1.00	1.00
Satd. Flow (perm)		1680	1583		2019		1770	2072		1770	2111	1583
Volume (vph)	71	30	61	169	41	12	177	375	52	5	487	97
Peak-hour factor, PHF	0.95	0.95	0.95	0.95	0.95	0.95	0.95	0.95	0.95	0.95	0.95	0.95
Adj. Flow (vph)	75	32	64	178	43	13	186	395	55	5	513	102
RTOR Reduction (vph)	0	0	55	0	2	0	0	4	0	0	0	25
Lane Group Flow (vph)	0	107	9	0	232	0	186	446	0	5	513	77
Confl. Peds. (#/hr)												
Turn Type	Split		Perm	Split			Prot			Prot		Perm
Protected Phases	4	4		3	3		5	2		1	6	
Permitted Phases			4									6
Actuated Green, G (s)		9.7	9.7		12.8		7.9	34.4		0.6	27.1	27.1
Effective Green, g (s)		11.0	11.0		13.7		8.3	35.3		1.0	28.0	28.0
Actuated g/C Ratio		0.14	0.14		0.18		0.11	0.46		0.01	0.36	0.36
Clearance Time (s)		5.3	5.3		4.9		4.4	4.9		4.4	4.9	4.9
Vehicle Extension (s)		3.5	3.5		2.0		2.0	3.9		2.0	3.9	3.9
Lane Grp Cap (vph)		240	226		359		191	950		23	768	576
v/s Ratio Prot		c0.06			c0.11		c0.11	0.22		0.00	c0.24	
v/s Ratio Perm			0.01									0.05
v/c Ratio		0.45	0.04		0.64		0.97	0.47		0.22	0.67	0.13
Uniform Delay, d1		30.2	28.5		29.4		34.2	14.4		37.6	20.6	16.4
Progression Factor		1.00	1.00		1.00		1.00	1.00		1.00	1.00	1.00
Incremental Delay, d2		1.6	0.1		3.0		56.9	0.5		1.7	2.4	0.1
Delay (s)		31.8	28.5		32.4		91.1	14.9		39.3	23.0	16.5
Level of Service		C	C		C		F	B		D	C	B
Approach Delay (s)		30.6			32.4			37.2			22.1	
Approach LOS		C			C			D			C	

Intersection Summary			
HCM Average Control Delay	30.2	HCM Level of Service	C
HCM Volume to Capacity ratio	0.66		
Actuated Cycle Length (s)	77.0	Sum of lost time (s)	16.0
Intersection Capacity Utilization	64.4%	ICU Level of Service	C
Analysis Period (min)	15		
c Critical Lane Group			

Movement	EBL	EBT	EBR	WBL	WBT	WBR	NBL	NBT	NBR	SBL	SBT	SBR
Lane Configurations												
Ideal Flow (vphpl)	1900	1900	1900	1900	1900	1900	1900	1900	1900	1900	1900	1900
Lane Width	12	12	16	12	12	12	10	12	12	12	12	12
Total Lost time (s)	4.0	4.0	4.0	4.0	4.0		4.0	4.0	4.0	4.0	4.0	
Lane Util. Factor	1.00	1.00	1.00	0.97	1.00		0.97	0.95	1.00	1.00	0.95	
Frpb, ped/bikes	1.00	1.00	1.00	1.00	1.00		1.00	1.00	1.00	1.00	1.00	
Flpb, ped/bikes	1.00	1.00	1.00	1.00	1.00		1.00	1.00	1.00	1.00	1.00	
Frt	1.00	1.00	0.85	1.00	0.98		1.00	1.00	0.85	1.00	0.92	
Flt Protected	0.95	1.00	1.00	0.95	1.00		0.95	1.00	1.00	0.95	1.00	
Satd. Flow (prot)	1770	1863	1794	3433	1821		3204	3539	1583	1770	3252	
Flt Permitted	0.95	1.00	1.00	0.95	1.00		0.95	1.00	1.00	0.95	1.00	
Satd. Flow (perm)	1770	1863	1794	3433	1821		3204	3539	1583	1770	3252	
Volume (vph)	31	28	66	210	44	8	360	139	254	15	253	298
Peak-hour factor, PHF	0.95	0.95	0.95	0.95	0.95	0.95	0.95	0.95	0.95	0.95	0.95	0.95
Adj. Flow (vph)	33	29	69	221	46	8	379	146	267	16	266	314
RTOR Reduction (vph)	0	0	62	0	7	0	0	0	125	0	205	0
Lane Group Flow (vph)	33	29	7	221	47	0	379	146	142	16	375	0
Confl. Peds. (#/hr)												
Turn Type	Prot		Perm	Prot			Prot		Perm	Prot		
Protected Phases	7	4		3	8		5	2		1	6	
Permitted Phases		4	4		8			2	2		6	
Actuated Green, G (s)	2.5	5.8	5.8	7.6	10.9		19.2	35.4	35.4	1.0	17.2	
Effective Green, g (s)	2.9	6.7	6.7	8.0	11.8		19.6	36.4	36.4	1.4	18.2	
Actuated g/C Ratio	0.04	0.10	0.10	0.12	0.17		0.29	0.53	0.53	0.02	0.27	
Clearance Time (s)	4.4	4.9	4.9	4.4	4.9		4.4	5.0	5.0	4.4	5.0	
Vehicle Extension (s)	3.0	3.0	3.0	3.0	3.0		3.0	3.0	3.0	3.0	3.0	
Lane Grp Cap (vph)	75	182	175	401	314		917	1881	841	36	864	
v/s Ratio Prot	0.02	0.02		c0.06	c0.03		c0.12	0.04		0.01	c0.12	
v/s Ratio Perm			0.00						0.09			
v/c Ratio	0.44	0.16	0.04	0.55	0.15		0.41	0.08	0.17	0.44	0.43	
Uniform Delay, d1	32.0	28.3	28.0	28.6	24.1		19.8	7.8	8.3	33.2	20.9	
Progression Factor	1.00	1.00	1.00	1.00	1.00		1.00	1.00	1.00	1.00	1.00	
Incremental Delay, d2	4.1	0.4	0.1	1.6	0.2		1.4	0.0	0.1	8.5	0.4	
Delay (s)	36.1	28.7	28.1	30.2	24.3		21.2	7.9	8.4	41.7	21.2	
Level of Service	D	C	C	C	C		C	A	A	D	C	
Approach Delay (s)		30.2			29.0			14.4			21.8	
Approach LOS		C			C			B			C	

Intersection Summary			
HCM Average Control Delay	20.3	HCM Level of Service	C
HCM Volume to Capacity ratio	0.39		
Actuated Cycle Length (s)	68.5	Sum of lost time (s)	12.0
Intersection Capacity Utilization	49.5%	ICU Level of Service	A
Analysis Period (min)	15		
c Critical Lane Group			

Movement	EBL	EBT	EBR	WBL	WBT	WBR	NBL	NBT	NBR	SBL	SBT	SBR
Lane Configurations												
Ideal Flow (vphpl)	1900	1900	1900	1900	1900	1900	1900	1900	1900	1900	1900	1900
Lane Width	10	12	16	12	12	12	11	12	12	10	12	12
Total Lost time (s)		4.0			4.0		4.0	4.0		4.0	4.0	
Lane Util. Factor		1.00			1.00		1.00	0.95		1.00	0.95	
Frt		0.97			0.93		1.00	0.99		1.00	0.98	
Flt Protected		0.97			0.98		0.95	1.00		0.95	1.00	
Satd. Flow (prot)		1741			1690		1711	3508		1652	3454	
Flt Permitted		0.97			0.98		0.95	1.00		0.95	1.00	
Satd. Flow (perm)		1741			1690		1711	3508		1652	3454	
Volume (vph)	62	5	21	67	4	84	52	417	26	55	474	90
Peak-hour factor, PHF	0.95	0.95	0.95	0.95	0.95	0.95	0.95	0.95	0.95	0.95	0.95	0.95
Adj. Flow (vph)	65	5	22	71	4	88	55	439	27	58	499	95
RTOR Reduction (vph)	0	14	0	0	43	0	0	4	0	0	15	0
Lane Group Flow (vph)	0	78	0	0	120	0	55	462	0	58	579	0
Turn Type	Split			Split			Prot			Prot		
Protected Phases	4	4		3	3		5	2		1	6	
Permitted Phases												
Actuated Green, G (s)		5.9			4.9		2.6	13.0		2.8	13.3	
Effective Green, g (s)		5.9			4.9		2.6	14.3		2.8	14.5	
Actuated g/C Ratio		0.13			0.11		0.06	0.33		0.06	0.33	
Clearance Time (s)		4.0			4.0		4.0	5.3		4.0	5.2	
Vehicle Extension (s)		3.0			3.0		3.0	3.0		3.0	3.0	
Lane Grp Cap (vph)		234			189		101	1143		105	1141	
v/s Ratio Prot		c0.04			c0.07		0.03	0.13		c0.04	c0.17	
v/s Ratio Perm												
v/c Ratio		0.33			0.64		0.54	0.40		0.55	0.51	
Uniform Delay, d1		17.2			18.6		20.1	11.5		19.9	11.8	
Progression Factor		1.00			1.00		1.00	1.00		1.00	1.00	
Incremental Delay, d2		0.8			6.9		5.9	0.2		6.2	0.4	
Delay (s)		18.1			25.5		26.0	11.7		26.1	12.2	
Level of Service		B			C		C	B		C	B	
Approach Delay (s)		18.1			25.5			13.2			13.4	
Approach LOS		B			C			B			B	

Intersection Summary			
HCM Average Control Delay	15.0	HCM Level of Service	B
HCM Volume to Capacity ratio	0.44		
Actuated Cycle Length (s)	43.9	Sum of lost time (s)	12.0
Intersection Capacity Utilization	38.6%	ICU Level of Service	A
Analysis Period (min)	15		
c Critical Lane Group			

Movement	EBL	EBT	EBR	WBL	WBT	WBR	NBL	NBT	NBR	SBL	SBT	SBR
Lane Configurations												
Ideal Flow (vphpl)	1900	1900	1900	1900	1900	1900	1900	1900	1900	1900	1900	1900
Lane Width	12	12	12	16	12	16	12	16	12	12	16	11
Total Lost time (s)					4.0	4.0	4.0	4.0			4.0	
Lane Util. Factor					1.00	1.00	1.00	1.00			0.95	
Frpb, ped/bikes					1.00	1.00	1.00	1.00			1.00	
Flpb, ped/bikes					1.00	1.00	1.00	1.00			1.00	
Frt					1.00	0.85	1.00	1.00			0.94	
Flt Protected					0.95	1.00	0.95	1.00			1.00	
Satd. Flow (prot)					1770	1794	1770	2111			3779	
Flt Permitted					0.95	1.00	0.95	1.00			1.00	
Satd. Flow (perm)					1770	1794	1770	2111			3779	
Volume (vph)	0	0	0	192	0	326	567	273	0	0	432	271
Peak-hour factor, PHF	0.95	0.95	0.95	0.95	0.95	0.95	0.95	0.95	0.95	0.95	0.95	0.95
Adj. Flow (vph)	0	0	0	202	0	343	597	287	0	0	455	285
RTOR Reduction (vph)	0	0	0	0	0	277	0	0	0	0	107	0
Lane Group Flow (vph)	0	0	0	0	202	66	597	287	0	0	633	0
Confl. Peds. (#/hr)												
Turn Type				Perm		Perm	Prot					
Protected Phases					6		3	8			4	
Permitted Phases				6		6						
Actuated Green, G (s)					13.0	13.0	27.5	48.4			16.4	
Effective Green, g (s)					13.5	13.5	28.0	48.9			16.9	
Actuated g/C Ratio					0.19	0.19	0.40	0.69			0.24	
Clearance Time (s)					4.5	4.5	4.5	4.5			4.5	
Vehicle Extension (s)					3.0	3.0	3.0	3.0			3.0	
Lane Grp Cap (vph)					339	344	704	1466			907	
v/s Ratio Prot							c0.34	0.14			c0.17	
v/s Ratio Perm					0.11	0.04						
v/c Ratio					0.60	0.19	0.85	0.20			0.70	
Uniform Delay, d1					26.0	23.9	19.3	3.8			24.4	
Progression Factor					1.00	1.00	1.00	1.00			1.00	
Incremental Delay, d2					2.8	0.3	9.3	0.1			2.4	
Delay (s)					28.8	24.1	28.6	3.9			26.8	
Level of Service					C	C	C	A			C	
Approach Delay (s)		0.0			25.9			20.6			26.8	
Approach LOS		A			C			C			C	

Intersection Summary			
HCM Average Control Delay	24.0	HCM Level of Service	C
HCM Volume to Capacity ratio	0.75		
Actuated Cycle Length (s)	70.4	Sum of lost time (s)	12.0
Intersection Capacity Utilization	86.2%	ICU Level of Service	E
Analysis Period (min)	15		
c Critical Lane Group			

2017 W/ Project AM
24: I-805 SB Ramps & Murray Ridge Rd 1/15/2015

Movement	EBL	EBT	EBR	WBL	WBT	WBR	NBL	NBT	NBR	SBL	SBT	SBR
Lane Configurations												
Ideal Flow (vphpl)	1900	1900	1900	1900	1900	1900	1900	1900	1900	1900	1900	1900
Lane Width	12	14	12	12	12	12	12	16	12	12	15	12
Total Lost time (s)		4.0	4.0					4.0		4.0	4.0	
Lane Util. Factor		1.00	1.00					1.00		1.00	1.00	
Frpb, ped/bikes		1.00	1.00					1.00		1.00	1.00	
Flpb, ped/bikes		1.00	1.00					1.00		1.00	1.00	
Frt		1.00	0.85					0.96		1.00	1.00	
Flt Protected		0.95	1.00					1.00		0.95	1.00	
Satd. Flow (prot)		1888	1583					2026		1770	2049	
Flt Permitted		0.95	1.00					1.00		0.95	1.00	
Satd. Flow (perm)		1888	1583					2026		1770	2049	
Volume (vph)	172	0	417	0	0	0	0	586	251	371	300	0
Peak-hour factor, PHF	0.95	0.95	0.95	0.95	0.95	0.95	0.95	0.95	0.95	0.95	0.95	0.95
Adj. Flow (vph)	181	0	439	0	0	0	0	617	264	391	316	0
RTOR Reduction (vph)	0	0	368	0	0	0	0	17	0	0	0	0
Lane Group Flow (vph)	0	181	71	0	0	0	0	864	0	391	316	0
Confl. Peds. (#/hr)												
Turn Type	Perm		Perm							Prot		
Protected Phases		4						2		1	6	
Permitted Phases	4		4									
Actuated Green, G (s)		12.7	12.7					37.3		20.2	61.7	
Effective Green, g (s)		13.7	13.7					38.6		20.4	63.0	
Actuated g/C Ratio		0.16	0.16					0.46		0.24	0.74	
Clearance Time (s)		5.0	5.0					5.3		4.2	5.3	
Vehicle Extension (s)		3.0	3.0					3.0		3.0	3.0	
Lane Grp Cap (vph)		305	256					923		426	1524	
v/s Ratio Prot								c0.43		c0.22	0.15	
v/s Ratio Perm		0.10	0.04									
v/c Ratio		0.59	0.28					0.94		0.92	0.21	
Uniform Delay, d1		32.9	31.2					21.9		31.3	3.3	
Progression Factor		1.00	1.00					1.00		1.00	1.00	
Incremental Delay, d2		3.1	0.6					16.2		24.4	0.1	
Delay (s)		36.0	31.7					38.1		55.7	3.4	
Level of Service		D	C					D		E	A	
Approach Delay (s)		33.0			0.0			38.1			32.3	
Approach LOS		C			A			D			C	

Intersection Summary				
HCM Average Control Delay	34.8	HCM Level of Service	C	
HCM Volume to Capacity ratio	0.87			
Actuated Cycle Length (s)	84.7	Sum of lost time (s)	12.0	
Intersection Capacity Utilization	86.2%	ICU Level of Service	E	
Analysis Period (min)	15			
c Critical Lane Group				

2017 W/ Project AM
25: Rio San Diego Drive & Qualcomm Wy 1/15/2015

Movement	EBL	EBT	EBR	WBL	WBT	WBR	NBL	NBT	NBR	SBL	SBT	SBR
Lane Configurations												
Ideal Flow (vphpl)	1900	1900	1900	1900	1900	1900	1900	1900	1900	1900	1900	1900
Lane Width	12	12	14	12	12	12	10	12	12	12	12	12
Total Lost time (s)	4.0	4.0	4.0	4.0	4.0	4.0	4.0	4.0		4.0	4.0	
Lane Util. Factor	0.97	1.00	1.00	0.97	0.95	1.00	0.97	0.91		0.97	0.91	
Frpb, ped/bikes	1.00	1.00	1.00	1.00	1.00	1.00	1.00	1.00		1.00	1.00	
Flpb, ped/bikes	1.00	1.00	1.00	1.00	1.00	1.00	1.00	1.00		1.00	1.00	
Frt	1.00	1.00	0.85	1.00	1.00	0.85	1.00	0.91		1.00	0.97	
Flt Protected	0.95	1.00	1.00	0.95	1.00	1.00	0.95	1.00		0.95	1.00	
Satd. Flow (prot)	3433	1863	1689	3433	3539	1583	3204	4627		3433	4928	
Flt Permitted	0.95	1.00	1.00	0.73	1.00	1.00	0.95	1.00		0.27	1.00	
Satd. Flow (perm)	3433	1863	1689	2634	3539	1583	3204	4627		970	4928	
Volume (vph)	74	41	86	249	33	166	85	387	583	147	397	104
Peak-hour factor, PHF	0.95	0.95	0.95	0.95	0.95	0.95	0.95	0.95	0.95	0.95	0.95	0.95
Adj. Flow (vph)	78	43	91	262	35	175	89	407	614	155	418	109
RTOR Reduction (vph)	0	0	50	0	0	130	0	233	0	0	51	0
Lane Group Flow (vph)	78	43	41	262	35	45	89	788	0	155	476	0
Confl. Peds. (#/hr)												
Turn Type	Prot		pm+ov	Perm		Perm	Prot			Perm		
Protected Phases	5	2	3		6		3	8			4	
Permitted Phases			2	6		6				4		
Actuated Green, G (s)	2.2	20.3	24.7	13.8	13.8	13.8	4.4	27.1		18.3	18.3	
Effective Green, g (s)	2.6	21.4	26.2	14.8	14.8	14.8	4.8	28.4		19.6	19.6	
Actuated g/C Ratio	0.04	0.37	0.45	0.26	0.26	0.26	0.08	0.49		0.34	0.34	
Clearance Time (s)	4.4	5.1	4.4	5.0	5.0	5.0	4.4	5.3		5.3	5.3	
Vehicle Extension (s)	3.0	3.0	3.0	3.0	3.0	3.0	3.0	3.0		3.0	3.0	
Lane Grp Cap (vph)	154	690	882	674	906	405	266	2273		329	1671	
v/s Ratio Prot	c0.02	0.02	0.00		0.01		0.03	c0.17			0.10	
v/s Ratio Perm			0.02	c0.10		0.03				c0.16		
v/c Ratio	0.51	0.06	0.05	0.39	0.04	0.11	0.33	0.35		0.47	0.28	
Uniform Delay, d1	27.0	11.7	8.8	17.8	16.2	16.5	25.0	9.0		15.0	14.0	
Progression Factor	1.00	1.00	1.00	1.00	1.00	1.00	1.00	1.00		1.00	1.00	
Incremental Delay, d2	2.6	0.0	0.0	0.4	0.0	0.1	0.7	0.1		1.1	0.1	
Delay (s)	29.6	11.8	8.8	18.1	16.2	16.6	25.7	9.1		16.1	14.1	
Level of Service	C	B	A	B	B	B	C	A		B	B	
Approach Delay (s)		17.1			17.4			10.4			14.5	
Approach LOS		B			B			B			B	

Intersection Summary				
HCM Average Control Delay	13.5	HCM Level of Service	B	
HCM Volume to Capacity ratio	0.44			
Actuated Cycle Length (s)	57.8	Sum of lost time (s)	16.0	
Intersection Capacity Utilization	48.6%	ICU Level of Service	A	
Analysis Period (min)	15			
c Critical Lane Group				

2017 W/ Project AM
26: Rio San Diego Drive & Rio Bonito Wy 1/15/2015

Movement	EBL	EBT	EBR	WBL	WBT	WBR	NBL	NBT	NBR	SBL	SBT	SBR
Lane Configurations												
Ideal Flow (vphpl)	1900	1900	1900	1900	1900	1900	1900	1900	1900	1900	1900	1900
Total Lost time (s)	4.0	4.0		4.0	4.0			4.0		4.0	4.0	
Lane Util. Factor	1.00	0.95		1.00	0.95			1.00		1.00	1.00	
Frt	1.00	0.98		1.00	1.00			0.98		1.00	0.89	
Flt Protected	0.95	1.00		0.95	1.00			0.97		0.95	1.00	
Satd. Flow (prot)	1770	3459		1770	3522			1762		1770	1662	
Flt Permitted	0.57	1.00		0.48	1.00			0.91		0.75	1.00	
Satd. Flow (perm)	1071	3459		895	3522			1652		1397	1662	
Volume (vph)	51	330	59	22	258	9	8	2	2	51	20	51
Peak-hour factor, PHF	0.95	0.95	0.95	0.95	0.95	0.95	0.95	0.95	0.95	0.95	0.95	0.95
Adj. Flow (vph)	54	347	62	23	272	9	8	2	2	54	21	54
RTOR Reduction (vph)	0	16	0	0	3	0	0	1	0	0	30	0
Lane Group Flow (vph)	54	393	0	23	278	0	0	11	0	54	45	0
Turn Type	Perm			Perm			Perm			Perm		
Protected Phases		4			8			2			6	
Permitted Phases	4			8			2			6		
Actuated Green, G (s)	41.3	41.3		41.3	41.3			39.7		39.7	39.7	
Effective Green, g (s)	41.8	41.8		41.8	41.8			40.2		40.2	40.2	
Actuated g/C Ratio	0.46	0.46		0.46	0.46			0.45		0.45	0.45	
Clearance Time (s)	4.5	4.5		4.5	4.5			4.5		4.5	4.5	
Lane Grp Cap (vph)	497	1607		416	1636			738		624	742	
v/s Ratio Prot		c0.11			0.08						0.03	
v/s Ratio Perm	0.05			0.03				0.01		c0.04		
v/c Ratio	0.11	0.24		0.06	0.17			0.01		0.09	0.06	
Uniform Delay, d1	13.6	14.6		13.2	14.0			13.9		14.3	14.2	
Progression Factor	1.00	1.00		1.00	1.00			1.00		1.00	1.00	
Incremental Delay, d2	0.4	0.4		0.3	0.2			0.0		0.3	0.2	
Delay (s)	14.0	14.9		13.5	14.2			13.9		14.6	14.3	
Level of Service	B	B		B	B			B		B	B	
Approach Delay (s)		14.8			14.2			13.9			14.4	
Approach LOS		B			B			B			B	

Intersection Summary				
HCM Average Control Delay	14.5	HCM Level of Service	B	
HCM Volume to Capacity ratio	0.17			
Actuated Cycle Length (s)	90.0	Sum of lost time (s)	8.0	
Intersection Capacity Utilization	31.7%	ICU Level of Service	A	
Analysis Period (min)	15			
c Critical Lane Group				

2017 W/ Project AM
50: Phyllis Pl & 1/22/2015

Movement	EBT	EBR	WBL	WBT	NBL	NBR
Lane Configurations						
Ideal Flow (vphpl)	1900	1900	1900	1900	1900	1900
Total Lost time (s)	4.0		4.0	4.0	4.0	4.0
Lane Util. Factor	0.95		0.97	1.00	1.00	0.88
Frt	0.96		1.00	1.00	1.00	0.85
Flt Protected	1.00		0.95	1.00	0.95	1.00
Satd. Flow (prot)	3402		3433	1863	1770	2787
Flt Permitted	1.00		0.95	1.00	0.95	1.00
Satd. Flow (perm)	3402		3433	1863	1770	2787
Volume (vph)	79	28	597	65	25	761
Peak-hour factor, PHF	0.95	0.95	0.95	0.95	0.95	0.95
Adj. Flow (vph)	83	29	628	68	26	801
RTOR Reduction (vph)	26	0	0	0	0	230
Lane Group Flow (vph)	86	0	628	68	26	571
Turn Type			Prot			pm+ov
Protected Phases	4		3	8	2	3
Permitted Phases						2
Actuated Green, G (s)	5.6		20.2	30.3	23.8	44.0
Effective Green, g (s)	6.1		20.7	30.8	24.3	45.0
Actuated g/C Ratio	0.10		0.33	0.49	0.39	0.71
Clearance Time (s)	4.5		4.5	4.5	4.5	4.5
Vehicle Extension (s)	3.0		3.0	3.0	3.0	3.0
Lane Grp Cap (vph)	329		1126	909	682	2164
v/s Ratio Prot	c0.03		c0.18	0.04	0.01	c0.09
v/s Ratio Perm						0.12
v/c Ratio	0.26		0.56	0.07	0.04	0.26
Uniform Delay, d1	26.4		17.4	8.6	12.1	3.2
Progression Factor	1.00		1.00	1.00	1.00	1.00
Incremental Delay, d2	0.4		0.6	0.0	0.1	0.1
Delay (s)	26.8		18.0	8.6	12.2	3.3
Level of Service	C		B	A	B	A
Approach Delay (s)	26.8			17.1	3.5	
Approach LOS	C			B	A	

Intersection Summary				
HCM Average Control Delay	10.9	HCM Level of Service	B	
HCM Volume to Capacity ratio	0.39			
Actuated Cycle Length (s)	63.1	Sum of lost time (s)	12.0	
Intersection Capacity Utilization	36.6%	ICU Level of Service	A	
Analysis Period (min)	15			
c Critical Lane Group				

2017 W/ Project AM
51: Via Alta & 1/22/2015

Movement	EBL	EBT	EBR	WBL	WBT	WBR	NBL	NBT	NBR	SBL	SBT	SBR
Lane Configurations												
Ideal Flow (vphpl)	1900	1900	1900	1900	1900	1900	1900	1900	1900	1900	1900	1900
Total Lost time (s)	4.0	4.0			4.0		4.0	4.0		4.0	4.0	4.0
Lane Util. Factor	1.00	1.00			1.00		1.00	1.00		1.00	1.00	1.00
Frt	1.00	0.86			0.97		1.00	1.00		1.00	1.00	0.85
Flt Protected	0.95	1.00			0.98		0.95	1.00		0.95	1.00	1.00
Satd. Flow (prot)	1770	1593			1769		1770	1861		1770	1863	1583
Flt Permitted	0.95	1.00			0.98		0.95	1.00		0.95	1.00	1.00
Satd. Flow (perm)	1770	1593			1769		1770	1861		1770	1863	1583
Volume (vph)	376	5	133	12	10	7	64	400	2	3	376	253
Peak-hour factor, PHF	0.95	0.95	0.95	0.95	0.95	0.95	0.95	0.95	0.95	0.95	0.95	0.95
Adj. Flow (vph)	396	5	140	13	11	7	67	421	2	3	396	266
RTOR Reduction (vph)	0	104	0	0	7	0	0	0	0	0	0	171
Lane Group Flow (vph)	396	41	0	0	24	0	67	423	0	3	396	95
Turn Type	Split			Split			Prot			Prot		Perm
Protected Phases	4	4		8	8		5	2		1	6	
Permitted Phases												6
Actuated Green, G (s)	25.1	25.1			4.2		16.6	50.9		0.6	34.9	34.9
Effective Green, g (s)	25.6	25.6			4.7		17.1	51.4		1.1	35.4	35.4
Actuated g/C Ratio	0.26	0.26			0.05		0.17	0.52		0.01	0.36	0.36
Clearance Time (s)	4.5	4.5			4.5		4.5	4.5		4.5	4.5	4.5
Vehicle Extension (s)	3.0	3.0			3.0		3.0	3.0		3.0	3.0	3.0
Lane Grp Cap (vph)	459	413			84		306	968		20	668	567
v/s Ratio Prot	c0.22	0.03			c0.01		c0.04	c0.23		0.00	c0.21	
v/s Ratio Perm												0.06
v/c Ratio	0.86	0.10			0.29		0.22	0.44		0.15	0.59	0.17
Uniform Delay, d1	34.9	27.8			45.4		35.1	14.7		48.4	25.8	21.6
Progression Factor	1.00	1.00			1.00		1.00	1.00		1.00	1.00	1.00
Incremental Delay, d2	15.3	0.1			1.9		1.6	1.4		3.5	1.4	0.1
Delay (s)	50.2	27.9			47.3		36.8	16.2		51.8	27.2	21.8
Level of Service	D	C			D		D	B		D	C	C
Approach Delay (s)		44.3			47.3			19.0			25.2	
Approach LOS		D			D			B			C	

Intersection Summary			
HCM Average Control Delay	29.8	HCM Level of Service	C
HCM Volume to Capacity ratio	0.65		
Actuated Cycle Length (s)	98.8	Sum of lost time (s)	20.0
Intersection Capacity Utilization	62.0%	ICU Level of Service	B
Analysis Period (min)	15		
c Critical Lane Group			

2017 W/ Project AM
53: Civitas & Via Alta 1/15/2015

Movement	EBL	EBT	EBR	WBL	WBT	WBR	NBL	NBT	NBR	SBL	SBT	SBR
Lane Configurations												
Ideal Flow (vphpl)	1900	1900	1900	1900	1900	1900	1900	1900	1900	1900	1900	1900
Total Lost time (s)	4.0	4.0		4.0	4.0		4.0	4.0		4.0	4.0	
Lane Util. Factor	1.00	0.95		1.00	0.95		1.00	1.00		1.00	1.00	
Frt	1.00	0.97		1.00	0.89		1.00	0.96		1.00	0.90	
Flt Protected	0.95	1.00		0.95	1.00		0.95	1.00		0.95	1.00	
Satd. Flow (prot)	1770	3446		1770	3146		1770	1782		1770	1675	
Flt Permitted	0.66	1.00		0.65	1.00		0.50	1.00		0.66	1.00	
Satd. Flow (perm)	1237	3446		1205	3146		928	1782		1237	1675	
Volume (vph)	204	130	28	30	34	98	44	94	38	177	89	184
Peak-hour factor, PHF	0.95	0.95	0.95	0.95	0.95	0.95	0.95	0.95	0.95	0.95	0.95	0.95
Adj. Flow (vph)	215	137	29	32	36	103	46	99	40	186	94	194
RTOR Reduction (vph)	0	15	0	0	54	0	0	16	0	0	83	0
Lane Group Flow (vph)	215	151	0	32	85	0	46	123	0	186	205	0
Turn Type	Perm			Perm			Perm			Perm		
Protected Phases		4			8			2			6	
Permitted Phases	4			8			2			6		
Actuated Green, G (s)	42.4	42.4		42.4	42.4		38.6	38.6		38.6	38.6	
Effective Green, g (s)	42.9	42.9		42.9	42.9		39.1	39.1		39.1	39.1	
Actuated g/C Ratio	0.48	0.48		0.48	0.48		0.43	0.43		0.43	0.43	
Clearance Time (s)	4.5	4.5		4.5	4.5		4.5	4.5		4.5	4.5	
Lane Grp Cap (vph)	590	1643		574	1500		403	774		537	728	
v/s Ratio Prot		0.04			0.03			0.07			0.12	
v/s Ratio Perm	c0.17			0.03			0.05			c0.15		
v/c Ratio	0.36	0.09		0.06	0.06		0.11	0.16		0.35	0.28	
Uniform Delay, d1	14.9	12.9		12.7	12.7		15.1	15.5		16.9	16.4	
Progression Factor	1.00	1.00		1.10	1.99		1.00	1.00		1.06	1.12	
Incremental Delay, d2	1.7	0.1		0.2	0.1		0.6	0.4		1.7	0.9	
Delay (s)	16.7	13.0		14.1	25.3		15.7	15.9		19.7	19.4	
Level of Service	B	B		B	C		B	B		B	B	
Approach Delay (s)		15.1			23.2			15.9			19.5	
Approach LOS		B			C			B			B	

Intersection Summary			
HCM Average Control Delay	18.1	HCM Level of Service	B
HCM Volume to Capacity ratio	0.36		
Actuated Cycle Length (s)	90.0	Sum of lost time (s)	8.0
Intersection Capacity Utilization	48.1%	ICU Level of Service	A
Analysis Period (min)	15		
c Critical Lane Group			

2017 W/ Project AM
54: Civitas & Gill Village Way 1/15/2015

Movement	EBT	EBR	WBL	WBT	NBL	NBR
Lane Configurations						
Ideal Flow (vphpl)	1900	1900	1900	1900	1900	1900
Total Lost time (s)	4.0		4.0	4.0	4.0	4.0
Lane Util. Factor	0.95		1.00	0.95	1.00	1.00
Frt	0.96		1.00	1.00	1.00	0.85
Flt Protected	1.00		0.95	1.00	0.95	1.00
Satd. Flow (prot)	3401		1770	3539	1770	1583
Flt Permitted	1.00		0.46	1.00	0.95	1.00
Satd. Flow (perm)	3401		851	3539	1770	1583
Volume (vph)	343	121	224	84	163	25
Peak-hour factor, PHF	0.95	0.95	0.95	0.95	0.95	0.95
Adj. Flow (vph)	361	127	236	88	172	26
RTOR Reduction (vph)	39	0	0	0	0	18
Lane Group Flow (vph)	449	0	236	88	172	8
Turn Type			Perm			Perm
Protected Phases	4			8	2	
Permitted Phases			8			2
Actuated Green, G (s)	53.7		53.7	53.7	27.3	27.3
Effective Green, g (s)	54.2		54.2	54.2	27.8	27.8
Actuated g/C Ratio	0.60		0.60	0.60	0.31	0.31
Clearance Time (s)	4.5		4.5	4.5	4.5	4.5
Lane Grp Cap (vph)	2048		512	2131	547	489
v/s Ratio Prot	0.13			0.02	c0.10	
v/s Ratio Perm			c0.28			0.01
v/c Ratio	0.22		0.46	0.04	0.31	0.02
Uniform Delay, d1	8.2		9.9	7.3	23.8	21.6
Progression Factor	0.86		1.00	1.00	1.00	1.00
Incremental Delay, d2	0.2		3.0	0.0	1.5	0.1
Delay (s)	7.3		12.8	7.3	25.3	21.7
Level of Service	A		B	A	C	C
Approach Delay (s)	7.3			11.3	24.8	
Approach LOS	A			B	C	

Intersection Summary			
HCM Average Control Delay	12.0	HCM Level of Service	B
HCM Volume to Capacity ratio	0.41		
Actuated Cycle Length (s)	90.0	Sum of lost time (s)	8.0
Intersection Capacity Utilization	44.8%	ICU Level of Service	A
Analysis Period (min)	15		
c Critical Lane Group			

2017 W/ Project AM
55: Via Alta & Mission Center Rd 1/15/2015

Movement	EBL	EBT	EBR	WBL	WBT	WBR	NBL	NBT	NBR	SBL	SBT	SBR
Lane Configurations												
Ideal Flow (vphpl)	1900	1900	1900	1900	1900	1900	1900	1900	1900	1900	1900	1900
Total Lost time (s)		4.0	4.0	4.0	4.0		4.0	4.0	4.0	4.0	4.0	
Lane Util. Factor		1.00	1.00	1.00	1.00		0.97	0.91	1.00	1.00	0.95	
Frt		1.00	0.85	1.00	0.99		1.00	1.00	0.85	1.00	0.99	
Flt Protected		0.98	1.00	0.95	1.00		0.95	1.00	1.00	0.95	1.00	
Satd. Flow (prot)		1826	1583	1770	1836		3433	5085	1583	1770	3493	
Flt Permitted		0.89	1.00	0.70	1.00		0.39	1.00	1.00	0.35	1.00	
Satd. Flow (perm)		1662	1583	1298	1836		1392	5085	1583	651	3493	
Volume (vph)	35	53	99	150	54	6	183	636	51	74	480	46
Peak-hour factor, PHF	0.95	0.95	0.95	0.95	0.95	0.95	0.95	0.95	0.95	0.95	0.95	0.95
Adj. Flow (vph)	37	56	104	158	57	6	193	669	54	78	505	48
RTOR Reduction (vph)	0	0	57	0	3	0	0	0	28	0	7	0
Lane Group Flow (vph)	0	93	47	158	60	0	193	669	26	78	546	0
Turn Type	Perm		Perm	Perm			Perm		Perm	Perm		
Protected Phases		4			8			2			6	
Permitted Phases	4		4	8			2		2	6		
Actuated Green, G (s)		46.9	46.9	46.9	46.9		49.1	49.1	49.1	49.1	49.1	
Effective Green, g (s)		47.4	47.4	47.4	47.4		49.6	49.6	49.6	49.6	49.6	
Actuated g/C Ratio		0.45	0.45	0.45	0.45		0.47	0.47	0.47	0.47	0.47	
Clearance Time (s)		4.5	4.5	4.5	4.5		4.5	4.5	4.5	4.5	4.5	
Lane Grp Cap (vph)		750	715	586	829		658	2402	748	308	1650	
v/s Ratio Prot					0.03			0.13			c0.16	
v/s Ratio Perm		0.06	0.03	c0.12			0.14		0.02	0.12		
v/c Ratio		0.12	0.07	0.27	0.07		0.29	0.28	0.03	0.25	0.33	
Uniform Delay, d1		16.7	16.3	18.0	16.3		17.0	16.8	14.9	16.6	17.3	
Progression Factor		1.00	1.00	1.00	1.00		1.00	1.00	1.00	1.00	1.00	
Incremental Delay, d2		0.3	0.2	1.1	0.2		1.1	0.3	0.1	2.0	0.5	
Delay (s)		17.1	16.5	19.1	16.5		18.1	17.1	14.9	18.6	17.9	
Level of Service		B	B	B	B		B	B	B	B	B	
Approach Delay (s)		16.7			18.4			17.2			18.0	
Approach LOS		B			B			B			B	

Intersection Summary			
HCM Average Control Delay	17.5	HCM Level of Service	B
HCM Volume to Capacity ratio	0.30		
Actuated Cycle Length (s)	105.0	Sum of lost time (s)	8.0
Intersection Capacity Utilization	44.9%	ICU Level of Service	A
Analysis Period (min)	15		
c Critical Lane Group			

2017 W/ Project AM
56: Aquatera Driveway & 1/15/2015

Movement	EBL	EBT	EBR	WBL	WBT	WBR	NBL	NBT	NBR	SBL	SBT	SBR
Lane Configurations												
Ideal Flow (vphpl)	1900	1900	1900	1900	1900	1900	1900	1900	1900	1900	1900	1900
Total Lost time (s)		4.0		4.0	4.0		4.0	4.0	4.0	4.0	4.0	
Lane Util. Factor		1.00		0.95	0.95		1.00	0.95	1.00	1.00	0.95	
Frt		0.89		1.00	0.89		1.00	1.00	0.85	1.00	0.99	
Flt Protected		1.00		0.95	0.99		0.95	1.00	1.00	0.95	1.00	
Satd. Flow (prot)		1660		1681	1551		1770	3539	1583	1770	3504	
Flt Permitted		1.00		0.74	0.97		0.36	1.00	1.00	0.65	1.00	
Satd. Flow (perm)		1660		1310	1518		668	3539	1583	1219	3504	
Volume (vph)	0	5	20	30	0	20	23	146	9	3	521	37
Peak-hour factor, PHF	0.95	0.95	0.95	0.95	0.95	0.95	0.95	0.95	0.95	0.95	0.95	0.95
Adj. Flow (vph)	0	5	21	32	0	21	24	154	9	3	548	39
RTOR Reduction (vph)	0	11	0	0	11	0	0	0	5	0	5	0
Lane Group Flow (vph)	0	15	0	25	17	0	24	154	4	3	582	0
Turn Type	Perm			Perm			Perm		Perm	Perm		
Protected Phases		4			8			2			6	
Permitted Phases	4			8			2		2	6		
Actuated Green, G (s)		49.0		49.0	49.0		47.0	47.0	47.0	47.0	47.0	
Effective Green, g (s)		49.5		49.5	49.5		47.5	47.5	47.5	47.5	47.5	
Actuated g/C Ratio		0.47		0.47	0.47		0.45	0.45	0.45	0.45	0.45	
Clearance Time (s)		4.5		4.5	4.5		4.5	4.5	4.5	4.5	4.5	
Lane Grp Cap (vph)		783		618	716		302	1601	716	551	1585	
v/s Ratio Prot		0.01						0.04			c0.17	
v/s Ratio Perm				c0.02	0.01		0.04		0.00	0.00		
v/c Ratio		0.02		0.04	0.02		0.08	0.10	0.01	0.01	0.37	
Uniform Delay, d1		14.8		15.0	14.8		16.3	16.5	15.8	15.8	18.9	
Progression Factor		1.00		1.00	1.00		1.00	1.00	1.00	1.00	1.00	
Incremental Delay, d2		0.0		0.1	0.1		0.5	0.1	0.0	0.0	0.7	
Delay (s)		14.8		15.1	14.9		16.8	16.6	15.8	15.8	19.5	
Level of Service		B		B	B		B	B	B	B	B	
Approach Delay (s)		14.8			15.0			16.6			19.5	
Approach LOS		B			B			B			B	

Intersection Summary			
HCM Average Control Delay	18.5	HCM Level of Service	B
HCM Volume to Capacity ratio	0.20		
Actuated Cycle Length (s)	105.0	Sum of lost time (s)	8.0
Intersection Capacity Utilization	33.9%	ICU Level of Service	A
Analysis Period (min)	15		

c Critical Lane Group

2017 W/ Project AM
57: Pinecrest & Murray Ridge Rd 1/15/2015

Movement	EBL	EBT	EBR	WBL	WBT	WBR	NBL	NBT	NBR	SBL	SBT	SBR
Lane Configurations												
Ideal Flow (vphpl)	1900	1900	1900	1900	1900	1900	1900	1900	1900	1900	1900	1900
Total Lost time (s)		4.0			4.0		4.0	4.0		4.0	4.0	
Lane Util. Factor		1.00			1.00		1.00	1.00		1.00	1.00	
Frt		0.87			0.97		1.00	0.99		1.00	1.00	
Flt Protected		1.00			0.97		0.95	1.00		0.95	1.00	
Satd. Flow (prot)		1626			1746		1770	1853		1770	1860	
Flt Permitted		0.99			0.77		0.36	1.00		0.40	1.00	
Satd. Flow (perm)		1618			1392		663	1853		742	1860	
Volume (vph)	8	8	208	39	9	16	25	423	15	5	486	5
Peak-hour factor, PHF	0.95	0.95	0.95	0.95	0.95	0.95	0.95	0.95	0.95	0.95	0.95	0.95
Adj. Flow (vph)	8	8	219	41	9	17	26	445	16	5	512	5
RTOR Reduction (vph)	0	140	0	0	11	0	0	1	0	0	0	0
Lane Group Flow (vph)	0	95	0	0	56	0	26	460	0	5	517	0
Turn Type	Perm			Perm			Perm			Perm		
Protected Phases		4			8			2			6	
Permitted Phases	4			8			2			6		
Actuated Green, G (s)		31.9			31.9		49.1	49.1		49.1	49.1	
Effective Green, g (s)		32.4			32.4		49.6	49.6		49.6	49.6	
Actuated g/C Ratio		0.36			0.36		0.55	0.55		0.55	0.55	
Clearance Time (s)		4.5			4.5		4.5	4.5		4.5	4.5	
Lane Grp Cap (vph)		582			501		365	1021		409	1025	
v/s Ratio Prot								0.25			c0.28	
v/s Ratio Perm		c0.06			0.04		0.04			0.01		
v/c Ratio		0.16			0.11		0.07	0.45		0.01	0.50	
Uniform Delay, d1		19.6			19.2		9.4	12.1		9.1	12.6	
Progression Factor		1.00			1.00		1.00	1.00		1.00	1.00	
Incremental Delay, d2		0.6			0.5		0.4	1.4		0.1	1.8	
Delay (s)		20.2			19.7		9.8	13.5		9.2	14.3	
Level of Service		C			B		A	B		A	B	
Approach Delay (s)		20.2			19.7			13.3			14.3	
Approach LOS		C			B			B			B	

Intersection Summary			
HCM Average Control Delay	15.2	HCM Level of Service	B
HCM Volume to Capacity ratio	0.37		
Actuated Cycle Length (s)	90.0	Sum of lost time (s)	8.0
Intersection Capacity Utilization	53.2%	ICU Level of Service	A
Analysis Period (min)	15		

c Critical Lane Group

2017 W/ Project AM
58: Murray Ridge Rd Ave & Sandrock Rd 1/15/2015

Movement	EBL	EBT	EBR	WBL	WBT	WBR	NBL	NBT	NBR	SBL	SBT	SBR
Lane Configurations												
Ideal Flow (vphpl)	1900	1900	1900	1900	1900	1900	1900	1900	1900	1900	1900	1900
Total Lost time (s)	4.0	4.0	4.0		4.0		4.0	4.0		4.0	4.0	
Lane Util. Factor	1.00	1.00	1.00		1.00		1.00	1.00		1.00	1.00	
Frt	1.00	1.00	0.85		0.94		1.00	0.99		1.00	0.94	
Flt Protected	0.95	1.00	1.00		1.00		0.95	1.00		0.95	1.00	
Satd. Flow (prot)	1770	1863	1583		1737		1770	1842		1770	1751	
Flt Permitted	0.58	1.00	1.00		0.98		0.53	1.00		0.37	1.00	
Satd. Flow (perm)	1082	1863	1583		1716		980	1842		689	1751	
Volume (vph)	254	76	56	15	106	111	69	351	28	37	144	96
Peak-hour factor, PHF	0.95	0.95	0.95	0.95	0.95	0.95	0.95	0.95	0.95	0.95	0.95	0.95
Adj. Flow (vph)	267	80	59	16	112	117	73	369	29	39	152	101
RTOR Reduction (vph)	0	0	30	0	37	0	0	3	0	0	27	0
Lane Group Flow (vph)	267	80	30	0	209	0	73	395	0	39	227	0
Turn Type	Perm		Perm	Perm			Perm			Perm		
Protected Phases		4			8			2			6	
Permitted Phases	4		4	8			2			6		
Actuated Green, G (s)	44.5	44.5	44.5		44.5		36.5	36.5		36.5	36.5	
Effective Green, g (s)	45.0	45.0	45.0		45.0		37.0	37.0		37.0	37.0	
Actuated g/C Ratio	0.50	0.50	0.50		0.50		0.41	0.41		0.41	0.41	
Clearance Time (s)	4.5	4.5	4.5		4.5		4.5	4.5		4.5	4.5	
Lane Grp Cap (vph)	541	932	792		858		403	757		283	720	
v/s Ratio Prot		0.04						c0.21			0.13	
v/s Ratio Perm	c0.25		0.02		0.12		0.07			0.06		
v/c Ratio	0.49	0.09	0.04		0.24		0.18	0.52		0.14	0.31	
Uniform Delay, d1	14.9	11.8	11.5		12.8		16.9	19.9		16.5	17.9	
Progression Factor	1.00	1.00	1.00		1.00		1.00	1.00		1.00	1.00	
Incremental Delay, d2	3.2	0.2	0.1		0.7		1.0	2.6		1.0	1.1	
Delay (s)	18.1	11.9	11.6		13.5		17.8	22.4		17.6	19.1	
Level of Service	B	B	B		B		B	C		B	B	
Approach Delay (s)		16.0			13.5			21.7			18.9	
Approach LOS		B			B			C			B	

Intersection Summary			
HCM Average Control Delay	18.0	HCM Level of Service	B
HCM Volume to Capacity ratio	0.51		
Actuated Cycle Length (s)	90.0	Sum of lost time (s)	8.0
Intersection Capacity Utilization	64.1%	ICU Level of Service	C
Analysis Period (min)	15		

c Critical Lane Group

2017 W/ Project AM
59: Aero Dr & Sandrock Rd 1/15/2015

Movement	EBL	EBT	EBR	WBL	WBT	WBR	NBL	NBT	NBR	SBL	SBT	SBR
Lane Configurations												
Ideal Flow (vphpl)	1900	1900	1900	1900	1900	1900	1900	1900	1900	1900	1900	1900
Total Lost time (s)	4.0	4.0	4.0	4.0	4.0		4.0	4.0	4.0	4.0	4.0	
Lane Util. Factor	1.00	0.95	1.00	1.00	0.95		0.95	0.95	1.00	1.00	1.00	
Frt	1.00	1.00	0.85	1.00	0.99		1.00	1.00	0.85	1.00	0.89	
Flt Protected	0.95	1.00	1.00	0.95	1.00		0.95	0.96	1.00	0.95	1.00	
Satd. Flow (prot)	1770	3539	1583	1770	3499		1681	1699	1583	1770	1650	
Flt Permitted	0.27	1.00	1.00	0.44	1.00		0.74	0.75	1.00	0.49	1.00	
Satd. Flow (perm)	499	3539	1583	816	3499		1316	1322	1583	904	1650	
Volume (vph)	38	480	139	80	670	55	549	55	160	15	5	15
Peak-hour factor, PHF	0.95	0.95	0.95	0.95	0.95	0.95	0.95	0.95	0.95	0.95	0.95	0.95
Adj. Flow (vph)	40	505	146	84	705	58	578	58	168	16	5	16
RTOR Reduction (vph)	0	0	93	0	11	0	0	0	91	0	9	0
Lane Group Flow (vph)	40	505	53	84	752	0	289	347	77	16	12	0
Turn Type	Perm		Perm	Perm			Perm		Perm	Perm		
Protected Phases		4			8			2			6	
Permitted Phases	4		4	8			2		2	6		
Actuated Green, G (s)	16.0	16.0	16.0	16.0	16.0		20.4	20.4	20.4	20.4	20.4	
Effective Green, g (s)	16.5	16.5	16.5	16.5	16.5		20.9	20.9	20.9	20.9	20.9	
Actuated g/C Ratio	0.36	0.36	0.36	0.36	0.36		0.46	0.46	0.46	0.46	0.46	
Clearance Time (s)	4.5	4.5	4.5	4.5	4.5		4.5	4.5	4.5	4.5	4.5	
Vehicle Extension (s)	3.0	3.0	3.0	3.0	3.0		3.0	3.0	3.0	3.0	3.0	
Lane Grp Cap (vph)	181	1286	575	297	1272		606	609	729	416	760	
v/s Ratio Prot		0.14			c0.21						0.01	
v/s Ratio Perm	0.08		0.03	0.10			0.22	c0.26	0.05	0.02		
v/c Ratio	0.22	0.39	0.09	0.28	0.59		0.48	0.57	0.11	0.04	0.02	
Uniform Delay, d1	10.0	10.7	9.5	10.3	11.7		8.5	9.0	7.0	6.7	6.7	
Progression Factor	1.00	1.00	1.00	1.00	1.00		1.00	1.00	1.00	1.00	1.00	
Incremental Delay, d2	0.6	0.2	0.1	0.5	0.7		0.6	1.2	0.1	0.0	0.0	
Delay (s)	10.6	10.9	9.6	10.8	12.5		9.1	10.2	7.0	6.8	6.7	
Level of Service	B	B	A	B	B		A	B	A	A	A	
Approach Delay (s)		10.6			12.3			9.1			6.7	
Approach LOS		B			B			A			A	

Intersection Summary			
HCM Average Control Delay	10.6	HCM Level of Service	B
HCM Volume to Capacity ratio	0.58		
Actuated Cycle Length (s)	45.4	Sum of lost time (s)	8.0
Intersection Capacity Utilization	56.9%	ICU Level of Service	B
Analysis Period (min)	15		

c Critical Lane Group

2017 W/ Project PM
4: Friars Rd EB Ramps & Mission Center Rd 1/15/2015

Movement	EBL	EBT	EBR	WBL	WBT	WBR	NBL	NBT	NBR	SBL	SBT	SBR
Lane Configurations												
Ideal Flow (vphpl)	1900	1900	1900	1900	1900	1900	1900	1900	1900	1900	1900	1900
Lane Width	14	12	13	12	12	12	12	13	12	15	16	12
Total Lost time (s)	4.0	4.0	4.0					4.0		4.0	4.0	
Lane Util. Factor	0.95	0.95	1.00					0.95		0.97	0.95	
Frpb, ped/bikes	1.00	1.00	1.00					1.00		1.00	1.00	
Flpb, ped/bikes	1.00	1.00	1.00					1.00		1.00	1.00	
Frt	1.00	1.00	0.85					0.98		1.00	1.00	
Flt Protected	0.95	0.95	1.00					1.00		0.95	1.00	
Satd. Flow (prot)	1793	1681	1636					3600		3776	4011	
Flt Permitted	0.95	0.95	1.00					1.00		0.95	1.00	
Satd. Flow (perm)	1793	1681	1636					3600		3776	4011	
Volume (vph)	317	0	225	0	0	0	0	646	75	369	628	0
Peak-hour factor, PHF	0.95	0.95	0.95	0.95	0.95	0.95	0.95	0.95	0.95	0.95	0.95	0.95
Adj. Flow (vph)	334	0	237	0	0	0	0	680	79	388	661	0
RTOR Reduction (vph)	0	0	193	0	0	0	0	10	0	0	0	0
Lane Group Flow (vph)	168	166	44	0	0	0	0	749	0	388	661	0
Confl. Peds. (#/hr)												
Turn Type	Split		Perm							Prot		
Protected Phases	4	4						2		1	6	
Permitted Phases			4									
Actuated Green, G (s)	8.9	8.9	8.9					17.9		11.3	33.0	
Effective Green, g (s)	9.8	9.8	9.8					18.9		11.7	34.6	
Actuated g/C Ratio	0.19	0.19	0.19					0.36		0.22	0.66	
Clearance Time (s)	4.9	4.9	4.9					5.0		4.4	5.6	
Vehicle Extension (s)	3.0	3.0	3.0					3.0		3.0	3.0	
Lane Grp Cap (vph)	335	314	306					1298		843	2648	
v/s Ratio Prot	0.09	c0.10						c0.21		c0.10	0.16	
v/s Ratio Perm			0.03									
v/c Ratio	0.50	0.53	0.14					0.58		0.46	0.25	
Uniform Delay, d1	19.1	19.2	17.8					13.5		17.6	3.6	
Progression Factor	1.00	1.00	1.00					1.00		1.00	1.00	
Incremental Delay, d2	1.2	1.6	0.2					0.6		0.4	0.0	
Delay (s)	20.3	20.8	18.0					14.2		18.0	3.7	
Level of Service	C	C	B					B		B	A	
Approach Delay (s)		19.5			0.0			14.2			9.0	
Approach LOS		B			A			B			A	

Intersection Summary				
HCM Average Control Delay	13.2	HCM Level of Service	B	
HCM Volume to Capacity ratio	0.53			
Actuated Cycle Length (s)	52.4	Sum of lost time (s)	12.0	
Intersection Capacity Utilization	52.0%	ICU Level of Service	A	
Analysis Period (min)	15			
c Critical Lane Group				

2017 W/ Project PM
5: Friars Rd WB Ramps & Mission Center Rd 1/15/2015

Movement	EBL	EBT	EBR	WBL	WBT	WBR	NBL	NBT	NBR	SBL	SBT	SBR
Lane Configurations												
Ideal Flow (vphpl)	1900	1900	1900	1900	1900	1900	1900	1900	1900	1900	1900	1900
Lane Width	12	12	12	15	12	15	10	12	12	12	14	11
Total Lost time (s)				4.0	4.0	4.0	4.0	4.0			4.0	4.0
Lane Util. Factor				0.95	0.95	1.00	0.97	0.95			0.95	1.00
Frpb, ped/bikes				1.00	1.00	1.00	1.00	1.00			1.00	1.00
Flpb, ped/bikes				1.00	1.00	1.00	1.00	1.00			1.00	1.00
Frt				1.00	1.00	0.85	1.00	1.00			1.00	0.85
Flt Protected				0.95	0.95	1.00	0.95	1.00			1.00	1.00
Satd. Flow (prot)				1849	1681	1742	3204	3539			3775	1531
Flt Permitted				0.95	0.95	1.00	0.95	1.00			1.00	1.00
Satd. Flow (perm)				1849	1681	1742	3204	3539			3775	1531
Volume (vph)	0	0	0	130	0	375	193	800	0	0	865	204
Peak-hour factor, PHF	0.95	0.95	0.95	0.95	0.95	0.95	0.95	0.95	0.95	0.95	0.95	0.95
Adj. Flow (vph)	0	0	0	137	0	395	203	842	0	0	911	215
RTOR Reduction (vph)	0	0	0	0	0	104	0	0	0	0	0	104
Lane Group Flow (vph)	0	0	0	70	67	291	203	842	0	0	911	111
Confl. Peds. (#/hr)												
Turn Type				Split		Perm	Prot					Perm
Protected Phases				8	8		5	2			6	
Permitted Phases						8						6
Actuated Green, G (s)				15.3	15.3	15.3	7.2	33.5			20.9	20.9
Effective Green, g (s)				16.2	16.2	16.2	7.6	34.5			22.9	22.9
Actuated g/C Ratio				0.28	0.28	0.28	0.13	0.59			0.39	0.39
Clearance Time (s)				4.9	4.9	4.9	4.4	5.0			6.0	6.0
Vehicle Extension (s)				3.0	3.0	3.0	3.0	3.0			3.0	3.0
Lane Grp Cap (vph)				510	464	481	415	2080			1473	597
v/s Ratio Prot				0.04	0.04		c0.06	0.24			c0.24	
v/s Ratio Perm						c0.17						0.07
v/c Ratio				0.14	0.14	0.61	0.49	0.40			0.62	0.19
Uniform Delay, d1				16.0	16.0	18.5	23.7	6.5			14.4	11.8
Progression Factor				1.00	1.00	1.00	1.00	1.00			1.00	1.00
Incremental Delay, d2				0.1	0.1	2.2	0.9	0.1			0.8	0.2
Delay (s)				16.1	16.2	20.6	24.7	6.7			15.2	11.9
Level of Service				B	B	C	C	A			B	B
Approach Delay (s)		0.0			19.5			10.2			14.5	
Approach LOS		A			B			B			B	

Intersection Summary				
HCM Average Control Delay	13.8	HCM Level of Service	B	
HCM Volume to Capacity ratio	0.59			
Actuated Cycle Length (s)	58.7	Sum of lost time (s)	12.0	
Intersection Capacity Utilization	52.0%	ICU Level of Service	A	
Analysis Period (min)	15			
c Critical Lane Group				

2017 W/ Project PM
7: Friars Rd EB Ramps & Qualcomm Wy 1/15/2015

Movement	EBL	EBT	EBR	WBL	WBT	WBR	NBL	NBT	NBR	SBL	SBT	SBR
Lane Configurations												
Ideal Flow (vphpl)	1900	1900	1900	1900	1900	1900	1900	1900	1900	1900	1900	1900
Lane Width	12	11	14	12	12	12	12	12	15	12	12	12
Total Lost time (s)		4.0	4.0					4.0	4.0	4.0	4.0	
Lane Util. Factor		1.00	1.00					0.95	1.00	1.00	0.95	
Frpb, ped/bikes		1.00	1.00					1.00	1.00	1.00	1.00	
Flpb, ped/bikes		1.00	1.00					1.00	1.00	1.00	1.00	
Frt		1.00	0.85					1.00	0.85	1.00	1.00	
Flt Protected		0.95	1.00					1.00	1.00	0.95	1.00	
Satd. Flow (prot)		1711	1689					3539	1742	1770	3539	
Flt Permitted		0.95	1.00					1.00	1.00	0.95	1.00	
Satd. Flow (perm)		1711	1689					3539	1742	1770	3539	
Volume (vph)	139	0	227	0	0	0	0	1284	581	180	794	0
Peak-hour factor, PHF	0.95	0.95	0.95	0.95	0.95	0.95	0.95	0.95	0.95	0.95	0.95	0.95
Adj. Flow (vph)	146	0	239	0	0	0	0	1352	612	189	836	0
RTOR Reduction (vph)	0	0	109	0	0	0	0	0	299	0	0	0
Lane Group Flow (vph)	0	146	130	0	0	0	0	1352	313	189	836	0
Confl. Peds. (#/hr)												
Turn Type	Split		Perm						Perm	Prot		
Protected Phases	4	4						2		1	6	
Permitted Phases			4						2			
Actuated Green, G (s)		15.5	15.5					44.2	44.2	15.9	64.7	
Effective Green, g (s)		16.4	16.4					45.3	45.3	16.3	65.6	
Actuated g/C Ratio		0.18	0.18					0.50	0.50	0.18	0.73	
Clearance Time (s)		4.9	4.9					5.1	5.1	4.4	4.9	
Vehicle Extension (s)		3.0	3.0					3.0	3.0	3.0	3.0	
Lane Grp Cap (vph)		312	308					1781	877	321	2580	
v/s Ratio Prot		c0.09						c0.38		c0.11	0.24	
v/s Ratio Perm			0.08						0.18			
v/c Ratio		0.47	0.42					0.76	0.36	0.59	0.32	
Uniform Delay, d1		32.9	32.6					18.0	13.5	33.8	4.3	
Progression Factor		1.00	1.00					1.00	1.00	1.00	1.00	
Incremental Delay, d2		1.1	0.9					3.1	1.1	2.8	0.3	
Delay (s)		34.0	33.5					21.1	14.7	36.5	4.7	
Level of Service		C	C					C	B	D	A	
Approach Delay (s)		33.7			0.0			19.1			10.5	
Approach LOS		C			A			B			B	

Intersection Summary				
HCM Average Control Delay	18.1	HCM Level of Service	B	
HCM Volume to Capacity ratio	0.66			
Actuated Cycle Length (s)	90.0	Sum of lost time (s)	12.0	
Intersection Capacity Utilization	99.6%	ICU Level of Service	F	
Analysis Period (min)	15			
c Critical Lane Group				

2017 W/ Project PM
8: Friars Rd WB Ramps & Qualcomm Wy 1/15/2015

Movement	EBL	EBT	EBR	WBL	WBT	WBR	NBL	NBT	NBR	SBL	SBT	SBR
Lane Configurations												
Ideal Flow (vphpl)	1900	1900	1900	1900	1900	1900	1900	1900	1900	1900	1900	1900
Lane Width	12	12	12	12	16	12	12	11	12	12	16	16
Total Lost time (s)				4.0	4.0		4.0	4.0			4.0	
Lane Util. Factor				0.95	0.95		1.00	1.00			0.95	
Frpb, ped/bikes				1.00	1.00		1.00	1.00			1.00	
Flpb, ped/bikes				1.00	1.00		1.00	1.00			1.00	
Frt				1.00	0.90		1.00	1.00			0.97	
Flt Protected				0.95	0.98		0.95	1.00			1.00	
Satd. Flow (prot)				1681	1776		1770	1801			3894	
Flt Permitted				0.95	0.98		0.95	1.00			1.00	
Satd. Flow (perm)				1681	1776		1770	1801			3894	
Volume (vph)	0	0	0	408	0	204	775	682	0	0	713	172
Peak-hour factor, PHF	0.95	0.95	0.95	0.95	0.95	0.95	0.95	0.95	0.95	0.95	0.95	0.95
Adj. Flow (vph)	0	0	0	429	0	215	816	718	0	0	751	181
RTOR Reduction (vph)	0	0	0	0	51	0	0	0	0	0	15	0
Lane Group Flow (vph)	0	0	0	320	273	0	816	718	0	0	917	0
Confl. Peds. (#/hr)												
Turn Type				Split			Prot					
Protected Phases				8	8		5	2			6	
Permitted Phases												
Actuated Green, G (s)				27.4	27.4		65.8	102.6			32.1	
Effective Green, g (s)				28.3	28.3		66.7	103.7			33.0	
Actuated g/C Ratio				0.20	0.20		0.48	0.74			0.24	
Clearance Time (s)				4.9	4.9		4.9	5.1			4.9	
Vehicle Extension (s)				3.0	3.0		3.0	3.0			3.0	
Lane Grp Cap (vph)				340	359		843	1334			918	
v/s Ratio Prot				c0.19	0.15		c0.46	0.40			c0.24	
v/s Ratio Perm												
v/c Ratio				0.94	0.76		0.97	0.54			1.00	
Uniform Delay, d1				55.0	52.7		35.6	7.8			53.5	
Progression Factor				1.00	1.00		1.00	1.00			1.00	
Incremental Delay, d2				33.7	9.1		24.1	1.6			29.1	
Delay (s)				88.7	61.8		59.7	9.4			82.6	
Level of Service				F	E		E	A			F	
Approach Delay (s)		0.0			75.2			36.2			82.6	
Approach LOS		A			E			D			F	

Intersection Summary				
HCM Average Control Delay	58.2	HCM Level of Service	E	
HCM Volume to Capacity ratio	0.97			
Actuated Cycle Length (s)	140.0	Sum of lost time (s)	12.0	
Intersection Capacity Utilization	99.6%	ICU Level of Service	F	
Analysis Period (min)	15			
c Critical Lane Group				

Movement	EBT	EBR	WBL	WBT	NBL	NBR
Lane Configurations						
Ideal Flow (vphpl)	1900	1900	1900	1900	1900	1900
Total Lost time (s)	4.0	4.0	4.0	4.0	4.0	4.0
Lane Util. Factor	0.95	1.00	0.97	1.00	0.97	1.00
Frt	1.00	0.85	1.00	1.00	1.00	0.85
Flt Protected	1.00	1.00	0.95	1.00	0.95	1.00
Satd. Flow (prot)	3539	1583	3433	1863	3433	1583
Flt Permitted	1.00	1.00	0.57	1.00	0.95	1.00
Satd. Flow (perm)	3539	1583	2046	1863	3433	1583
Volume (vph)	266	235	453	173	499	507
Peak-hour factor, PHF	0.95	0.95	0.95	0.95	0.95	0.95
Adj. Flow (vph)	280	247	477	182	525	534
RTOR Reduction (vph)	0	171	0	0	0	200
Lane Group Flow (vph)	280	76	477	182	525	334
Turn Type		Perm	Perm			Perm
Protected Phases	4			8	2	
Permitted Phases		4	8			2
Actuated Green, G (s)	22.1	22.1	22.1	22.1	42.3	42.3
Effective Green, g (s)	22.6	22.6	22.6	22.6	42.8	42.8
Actuated g/C Ratio	0.31	0.31	0.31	0.31	0.58	0.58
Clearance Time (s)	4.5	4.5	4.5	4.5	4.5	4.5
Vehicle Extension (s)	3.0	3.0	3.0	3.0	3.0	3.0
Lane Grp Cap (vph)	1090	487	630	574	2002	923
v/s Ratio Prot	0.08			0.10	0.15	
v/s Ratio Perm		0.05	c0.23			c0.21
v/c Ratio	0.26	0.16	0.76	0.32	0.26	0.36
Uniform Delay, d1	19.1	18.5	22.9	19.5	7.5	8.1
Progression Factor	1.00	1.00	1.00	1.00	1.00	1.00
Incremental Delay, d2	0.1	0.2	5.2	0.3	0.3	1.1
Delay (s)	19.2	18.6	28.1	19.8	7.8	9.2
Level of Service	B	B	C	B	A	A
Approach Delay (s)	18.9			25.8	8.5	
Approach LOS	B			C	A	

Intersection Summary			
HCM Average Control Delay	16.0	HCM Level of Service	B
HCM Volume to Capacity ratio	0.50		
Actuated Cycle Length (s)	73.4	Sum of lost time (s)	8.0
Intersection Capacity Utilization	45.4%	ICU Level of Service	A
Analysis Period (min)	15		
c Critical Lane Group			

Movement	EBL	EBT	EBR	WBL	WBT	WBR	NBL	NBT	NBR	SBL	SBT	SBR
Lane Configurations												
Ideal Flow (vphpl)	1900	1900	1900	1900	1900	1900	1900	1900	1900	1900	1900	1900
Lane Width	14	12	12	10	12	12	12	11	13	12	15	10
Total Lost time (s)	4.0	4.0		4.0	4.0			4.0	4.0		4.0	
Lane Util. Factor	1.00	0.91		1.00	0.91			1.00	1.00		1.00	
Frt	1.00	0.99		1.00	1.00			1.00	0.85		0.96	
Flt Protected	0.95	1.00		0.95	1.00			0.96	1.00		0.97	
Satd. Flow (prot)	1888	5029		1652	5070			1724	1636		1899	
Flt Permitted	0.95	1.00		0.95	1.00			0.73	1.00		0.78	
Satd. Flow (perm)	1888	5029		1652	5070			1307	1636		1524	
Volume (vph)	24	2296	181	52	1450	29	31	4	110	147	4	69
Peak-hour factor, PHF	0.95	0.95	0.95	0.95	0.95	0.95	0.95	0.95	0.95	0.95	0.95	0.95
Adj. Flow (vph)	25	2417	191	55	1526	31	33	4	116	155	4	73
RTOR Reduction (vph)	0	6	0	0	1	0	0	0	60	0	12	0
Lane Group Flow (vph)	25	2602	0	55	1556	0	0	37	56	0	220	0
Turn Type	Prot			Prot			Perm		Perm	Perm		
Protected Phases	5	2		1	6			8			4	
Permitted Phases							8		8	4		
Actuated Green, G (s)	2.7	69.8		6.6	73.7			20.8	20.8		20.8	
Effective Green, g (s)	3.1	72.0		7.0	75.9			21.7	21.7		21.7	
Actuated g/C Ratio	0.03	0.64		0.06	0.67			0.19	0.19		0.19	
Clearance Time (s)	4.4	6.2		4.4	6.2			4.9	4.9		4.9	
Vehicle Extension (s)	3.0	3.0		3.0	3.0			3.0	3.0		3.0	
Lane Grp Cap (vph)	52	3213		103	3414			252	315		293	
v/s Ratio Prot	0.01	c0.52		c0.03	c0.31							
v/s Ratio Perm								0.03	0.03		c0.14	
v/c Ratio	0.48	0.81		0.53	0.46			0.15	0.18		0.75	
Uniform Delay, d1	54.0	15.2		51.3	8.7			37.8	38.0		42.9	
Progression Factor	1.00	1.00		1.00	1.00			1.00	1.00		1.00	
Incremental Delay, d2	6.9	1.6		5.2	0.1			0.3	0.3		10.3	
Delay (s)	60.9	16.8		56.5	8.8			38.1	38.3		53.3	
Level of Service	E	B		E	A			D	D		D	
Approach Delay (s)		17.2			10.4			38.3			53.3	
Approach LOS		B			B			D			D	

Intersection Summary			
HCM Average Control Delay	17.4	HCM Level of Service	B
HCM Volume to Capacity ratio	0.80		
Actuated Cycle Length (s)	112.7	Sum of lost time (s)	16.0
Intersection Capacity Utilization	77.8%	ICU Level of Service	D
Analysis Period (min)	15		
c Critical Lane Group			

Movement	EBL	EBT	EBR	WBL	WBT	WBR	NBL	NBT	NBR	SBL	SBT	SBR
Lane Configurations												
Ideal Flow (vphpl)	1900	1900	1900	1900	1900	1900	1900	1900	1900	1900	1900	1900
Lane Width	12	12	14	10	12	12	9	12	16	12	12	12
Total Lost time (s)	4.0	4.0	4.0	4.0	4.0	4.0	4.0	4.0	4.0	4.0	4.0	4.0
Lane Util. Factor	1.00	0.91	1.00	0.97	0.91	1.00	0.97	1.00	1.00	0.97	0.95	0.95
Frpb, ped/bikes	1.00	1.00	1.00	1.00	1.00	1.00	1.00	1.00	1.00	1.00	1.00	1.00
Flpb, ped/bikes	1.00	1.00	1.00	1.00	1.00	1.00	1.00	1.00	1.00	1.00	1.00	1.00
Frt	1.00	1.00	0.85	1.00	1.00	0.85	1.00	1.00	0.85	1.00	0.90	0.85
Flt Protected	0.95	1.00	1.00	0.95	1.00	1.00	0.95	1.00	1.00	0.95	1.00	1.00
Satd. Flow (prot)	1770	5085	1689	3204	5085	1583	3090	1863	1794	3433	1600	1504
Flt Permitted	0.95	1.00	1.00	0.95	1.00	1.00	0.95	1.00	1.00	0.95	1.00	1.00
Satd. Flow (perm)	1770	5085	1689	3204	5085	1583	3090	1863	1794	3433	1600	1504
Volume (vph)	148	2094	334	177	1493	72	253	18	239	23	9	45
Peak-hour factor, PHF	0.95	0.95	0.95	0.95	0.95	0.95	0.95	0.95	0.95	0.95	0.95	0.95
Adj. Flow (vph)	156	2204	352	186	1572	76	266	19	252	24	9	47
RTOR Reduction (vph)	0	0	108	0	0	32	0	0	152	0	14	5
Lane Group Flow (vph)	156	2204	244	186	1572	44	266	19	100	24	11	26
Confl. Peds. (#/hr)												
Turn Type	Prot		pm+ov	Prot		pm+ov	Prot		Perm	Prot		pm+ov
Protected Phases	5	2	3	1	6	7	3	8		7	4	5
Permitted Phases			2			6			8			4
Actuated Green, G (s)	15.9	81.8	95.5	11.6	77.5	81.6	13.7	27.6	27.6	4.1	18.0	33.9
Effective Green, g (s)	16.3	84.0	98.1	12.0	79.7	84.2	14.1	28.5	28.5	4.5	18.9	35.2
Actuated g/C Ratio	0.11	0.58	0.68	0.08	0.55	0.58	0.10	0.20	0.20	0.03	0.13	0.24
Clearance Time (s)	4.4	6.2	4.4	4.4	6.2	4.4	4.4	4.9	4.9	4.4	4.9	4.4
Vehicle Extension (s)	3.0	3.0	3.0	3.0	3.0	3.0	3.0	3.0	3.0	3.0	3.0	3.0
Lane Grp Cap (vph)	199	2946	1189	265	2795	963	300	366	353	107	209	407
v/s Ratio Prot	c0.09	c0.43	0.02	0.06	0.31	0.00	c0.09	0.01		0.01	0.01	0.01
v/s Ratio Perm			0.12			0.03			c0.06			0.01
v/c Ratio	0.78	0.75	0.21	0.70	0.56	0.05	0.89	0.05	0.28	0.22	0.05	0.07
Uniform Delay, d1	62.6	22.6	8.8	64.8	21.3	13.1	64.7	47.3	49.6	68.5	55.2	42.2
Progression Factor	1.00	1.00	1.00	1.00	1.00	1.00	1.00	1.00	1.00	1.00	1.00	1.00
Incremental Delay, d2	18.0	1.8	0.1	8.1	0.8	0.0	25.3	0.1	0.4	1.1	0.1	0.1
Delay (s)	80.7	24.4	8.9	72.9	22.1	13.1	90.0	47.3	50.0	69.6	55.3	42.3
Level of Service	F	C	A	E	C	B	F	D	D	E	E	D
Approach Delay (s)		25.7			26.9			69.7			54.6	
Approach LOS		C			C			E			D	

Intersection Summary			
HCM Average Control Delay	31.1	HCM Level of Service	C
HCM Volume to Capacity ratio	0.68		
Actuated Cycle Length (s)	145.0	Sum of lost time (s)	8.0
Intersection Capacity Utilization	69.4%	ICU Level of Service	C
Analysis Period (min)	15		
c Critical Lane Group			

Movement	EBL	EBT	EBR	WBL	WBT	WBR	NBL	NBT	NBR	SBL	SBT	SBR
Lane Configurations												
Ideal Flow (vphpl)	1900	1900	1900	1900	1900	1900	1900	1900	1900	1900	1900	1900
Lane Width	10	12	16	10	13	12	11	16	12	11	15	12
Total Lost time (s)	4.0	4.0	4.0	4.0	4.0	4.0	4.0	4.0	4.0	4.0	4.0	4.0
Lane Util. Factor	0.97	0.91	1.00	0.97	0.91	1.00	0.97	1.00	1.00	0.97	1.00	1.00
Frpb, ped/bikes	1.00	1.00	1.00	1.00	1.00	1.00	1.00	1.00	1.00	1.00	1.00	1.00
Flpb, ped/bikes	1.00	1.00	1.00	1.00	1.00	1.00	1.00	1.00	1.00	1.00	1.00	1.00
Frt	1.00	1.00	0.85	1.00	1.00	0.85	1.00	1.00	0.85	1.00	1.00	0.85
Flt Protected	0.95	1.00	1.00	0.95	1.00	1.00	0.95	1.00	1.00	0.95	1.00	1.00
Satd. Flow (prot)	3204	5085	1794	3204	5255	1583	3319	2111	1583	3319	2049	1583
Flt Permitted	0.95	1.00	1.00	0.95	1.00	1.00	0.95	1.00	1.00	0.95	1.00	1.00
Satd. Flow (perm)	3204	5085	1794	3204	5255	1583	3319	2111	1583	3319	2049	1583
Volume (vph)	210	2353	221	488	1147	131	183	19	672	68	21	84
Peak-hour factor, PHF	0.95	0.95	0.95	0.95	0.95	0.95	0.95	0.95	0.95	0.95	0.95	0.95
Adj. Flow (vph)	221	2477	233	514	1207	138	193	20	707	72	22	88
RTOR Reduction (vph)	0	0	76	0	0	49	0	0	1	0	0	77
Lane Group Flow (vph)	221	2477	157	514	1207	89	193	20	706	72	22	11
Confl. Peds. (#/hr)												
Turn Type	Prot		Perm	Prot		pm+ov	Prot		pm+ov	Prot		Perm
Protected Phases	5	2		1	6	7	3	8	1	7	4	
Permitted Phases			2			6			8			4
Actuated Green, G (s)	13.3	63.1	63.1	21.8	71.4	82.7	11.9	16.5	38.3	11.3	15.9	15.9
Effective Green, g (s)	13.7	65.1	65.1	22.2	73.6	85.3	12.3	17.4	39.6	11.7	16.8	16.8
Actuated g/C Ratio	0.10	0.49	0.49	0.17	0.56	0.64	0.09	0.13	0.30	0.09	0.13	0.13
Clearance Time (s)	4.4	6.0	6.0	4.4	6.2	4.4	4.4	4.9	4.4	4.4	4.9	4.9
Vehicle Extension (s)	3.0	3.0	3.0	3.0	3.0	3.0	3.0	3.0	3.0	3.0	3.0	3.0
Lane Grp Cap (vph)	332	2500	882	537	2921	1068	308	277	521	293	260	201
v/s Ratio Prot	0.07	c0.49		0.16	0.23	0.01	c0.06	0.01	c0.23	0.02	0.01	
v/s Ratio Perm			0.09			0.05			0.22			0.01
v/c Ratio	0.67	0.99	0.18	0.96	0.41	0.08	0.63	0.07	1.36	0.25	0.08	0.06
Uniform Delay, d1	57.1	33.4	18.7	54.6	17.0	8.9	57.8	50.4	46.4	56.2	51.0	50.8
Progression Factor	1.00	1.00	1.00	1.00	1.00	1.00	1.00	1.00	1.00	1.00	1.00	1.00
Incremental Delay, d2	5.0	15.8	0.1	28.1	0.1	0.0	3.9	0.1	172.3	0.4	0.1	0.1
Delay (s)	62.1	49.2	18.8	82.7	17.0	8.9	61.8	50.5	218.7	56.7	51.2	50.9
Level of Service	E	D	B	F	B	A	E	D	F	E	D	D
Approach Delay (s)		47.7			34.6			182.1			53.2	
Approach LOS		D			C			F			D	

Intersection Summary			
HCM Average Control Delay	64.7	HCM Level of Service	E
HCM Volume to Capacity ratio	1.06		
Actuated Cycle Length (s)	132.4	Sum of lost time (s)	8.0
Intersection Capacity Utilization	100.4%	ICU Level of Service	G
Analysis Period (min)	15		
c Critical Lane Group			

2017 W/ Project PM
17: Mission Ctr Rd & Murray Ridge Rd 1/15/2015

Movement	EBL	EBT	EBR	WBL	WBT	WBR	NBL	NBT	NBR	SBL	SBT	SBR
Lane Configurations												
Ideal Flow (vphpl)	1900	1900	1900	1900	1900	1900	1900	1900	1900	1900	1900	1900
Lane Width	12	10	12	12	16	12	12	16	12	12	16	12
Total Lost time (s)		4.0	4.0		4.0		4.0	4.0		4.0	4.0	4.0
Lane Util. Factor		1.00	1.00		1.00		1.00	1.00		1.00	1.00	1.00
Frpb, ped/bikes		1.00	1.00		1.00		1.00	1.00		1.00	1.00	1.00
Flpb, ped/bikes		1.00	1.00		1.00		1.00	1.00		1.00	1.00	1.00
Frt		1.00	0.85		1.00		1.00	0.98		1.00	1.00	0.85
Flt Protected		0.96	1.00		0.97		0.95	1.00		0.95	1.00	1.00
Satd. Flow (prot)		1675	1583		2031		1770	2064		1770	2111	1583
Flt Permitted		0.96	1.00		0.97		0.95	1.00		0.95	1.00	1.00
Satd. Flow (perm)		1675	1583		2031		1770	2064		1770	2111	1583
Volume (vph)	243	76	435	116	47	6	219	505	88	15	434	171
Peak-hour factor, PHF	0.95	0.95	0.95	0.95	0.95	0.95	0.95	0.95	0.95	0.95	0.95	0.95
Adj. Flow (vph)	256	80	458	122	49	6	231	532	93	16	457	180
RTOR Reduction (vph)	0	0	282	0	2	0	0	6	0	0	0	55
Lane Group Flow (vph)	0	336	176	0	175	0	231	619	0	16	457	125
Confl. Peds. (#/hr)												
Turn Type	Split		Perm	Split			Prot			Prot		Perm
Protected Phases	4	4		3	3		5	2		1	6	
Permitted Phases			4									6
Actuated Green, G (s)		19.6	19.6		12.0		7.8	31.4		0.7	24.3	24.3
Effective Green, g (s)		20.9	20.9		12.9		8.2	32.3		1.1	25.2	25.2
Actuated g/C Ratio		0.25	0.25		0.16		0.10	0.39		0.01	0.30	0.30
Clearance Time (s)		5.3	5.3		4.9		4.4	4.9		4.4	4.9	4.9
Vehicle Extension (s)		3.5	3.5		2.0		2.0	3.9		2.0	3.9	3.9
Lane Grp Cap (vph)		421	398		315		174	801		23	639	479
v/s Ratio Prot		c0.20			c0.09		c0.13	c0.30		0.01	0.22	
v/s Ratio Perm			0.11									0.08
v/c Ratio		0.80	0.44		0.56		1.33	0.77		0.70	0.72	0.26
Uniform Delay, d1		29.2	26.2		32.5		37.5	22.3		40.9	25.8	22.0
Progression Factor		1.00	1.00		1.00		1.00	1.00		1.00	1.00	1.00
Incremental Delay, d2		10.4	0.9		1.2		181.5	4.9		54.1	4.0	0.4
Delay (s)		39.6	27.2		33.7		219.0	27.2		95.0	29.9	22.3
Level of Service		D	C		C		F	C		F	C	C
Approach Delay (s)		32.4			33.7			78.9			29.4	
Approach LOS		C			C			E			C	

Intersection Summary			
HCM Average Control Delay	47.8	HCM Level of Service	D
HCM Volume to Capacity ratio	0.79		
Actuated Cycle Length (s)	83.2	Sum of lost time (s)	12.0
Intersection Capacity Utilization	69.0%	ICU Level of Service	C
Analysis Period (min)	15		
c Critical Lane Group			

2017 W/ Project PM
18: Civitas & Mission Center Rd 1/15/2015

Movement	EBL	EBT	EBR	WBL	WBT	WBR	NBL	NBT	NBR	SBL	SBT	SBR
Lane Configurations												
Ideal Flow (vphpl)	1900	1900	1900	1900	1900	1900	1900	1900	1900	1900	1900	1900
Lane Width	12	12	16	12	12	12	10	12	12	12	12	12
Total Lost time (s)	4.0	4.0	4.0	4.0	4.0		4.0	4.0	4.0	4.0	4.0	
Lane Util. Factor	1.00	1.00	1.00	0.97	1.00		0.97	0.95	1.00	1.00	0.95	
Frpb, ped/bikes	1.00	1.00	1.00	1.00	1.00		1.00	1.00	1.00	1.00	1.00	
Flpb, ped/bikes	1.00	1.00	1.00	1.00	1.00		1.00	1.00	1.00	1.00	1.00	
Frt	1.00	1.00	0.85	1.00	0.95		1.00	1.00	0.85	1.00	0.98	
Flt Protected	0.95	1.00	1.00	0.95	1.00		0.95	1.00	1.00	0.95	1.00	
Satd. Flow (prot)	1770	1863	1794	3433	1774		3204	3539	1583	1770	3483	
Flt Permitted	0.95	1.00	1.00	0.95	1.00		0.95	1.00	1.00	0.95	1.00	
Satd. Flow (perm)	1770	1863	1794	3433	1774		3204	3539	1583	1770	3483	
Volume (vph)	202	77	264	222	69	32	157	309	397	35	430	51
Peak-hour factor, PHF	0.95	0.95	0.95	0.95	0.95	0.95	0.95	0.95	0.95	0.95	0.95	0.95
Adj. Flow (vph)	213	81	278	234	73	34	165	325	418	37	453	54
RTOR Reduction (vph)	0	0	223	0	18	0	0	0	250	0	9	0
Lane Group Flow (vph)	213	81	55	234	89	0	165	325	168	37	498	0
Confl. Peds. (#/hr)												
Turn Type	Prot		Perm	Prot			Prot		Perm	Prot		
Protected Phases	7	4		3	8		5	2		1	6	
Permitted Phases		4	4		8			2	2		6	
Actuated Green, G (s)	15.9	14.8	14.8	10.5	9.4		16.8	30.8	30.8	4.4	18.4	
Effective Green, g (s)	16.3	15.7	15.7	10.9	10.3		17.2	31.8	31.8	4.8	19.4	
Actuated g/C Ratio	0.21	0.20	0.20	0.14	0.13		0.22	0.40	0.40	0.06	0.24	
Clearance Time (s)	4.4	4.9	4.9	4.4	4.9		4.4	5.0	5.0	4.4	5.0	
Vehicle Extension (s)	3.0	3.0	3.0	3.0	3.0		3.0	3.0	3.0	3.0	3.0	
Lane Grp Cap (vph)	364	369	356	472	231		696	1421	636	107	853	
v/s Ratio Prot	c0.12	0.04		0.07	c0.05		0.05	0.09		c0.02	c0.14	
v/s Ratio Perm			0.03						c0.11			
v/c Ratio	0.59	0.22	0.15	0.50	0.38		0.24	0.23	0.26	0.35	0.58	
Uniform Delay, d1	28.4	26.6	26.3	31.6	31.5		25.6	15.6	15.9	35.7	26.3	
Progression Factor	1.00	1.00	1.00	1.00	1.00		1.00	1.00	1.00	1.00	1.00	
Incremental Delay, d2	2.4	0.3	0.2	0.8	1.1		0.8	0.1	0.2	1.9	1.0	
Delay (s)	30.8	26.9	26.5	32.4	32.6		26.4	15.7	16.1	37.6	27.4	
Level of Service	C	C	C	C	C		C	B	B	D	C	
Approach Delay (s)		28.1			32.5			17.8			28.1	
Approach LOS		C			C			B			C	

Intersection Summary			
HCM Average Control Delay	24.8	HCM Level of Service	C
HCM Volume to Capacity ratio	0.49		
Actuated Cycle Length (s)	79.2	Sum of lost time (s)	20.0
Intersection Capacity Utilization	46.2%	ICU Level of Service	A
Analysis Period (min)	15		
c Critical Lane Group			

2017 W/ Project PM
19: Mission Center Crt & Mission Center Rd 1/15/2015

Movement	EBL	EBT	EBR	WBL	WBT	WBR	NBL	NBT	NBR	SBL	SBT	SBR
Lane Configurations												
Ideal Flow (vphpl)	1900	1900	1900	1900	1900	1900	1900	1900	1900	1900	1900	1900
Lane Width	10	12	16	12	12	12	11	12	12	10	12	12
Total Lost time (s)		4.0			4.0		4.0	4.0		4.0	4.0	
Lane Util. Factor		1.00			1.00		1.00	0.95		1.00	0.95	
Frt		0.93			0.93		1.00	0.98		1.00	0.99	
Flt Protected		0.98			0.98		0.95	1.00		0.95	1.00	
Satd. Flow (prot)		1693			1693		1711	3481		1652	3495	
Flt Permitted		0.98			0.98		0.95	1.00		0.95	1.00	
Satd. Flow (perm)		1693			1693		1711	3481		1652	3495	
Volume (vph)	114	5	129	90	3	99	67	629	78	152	692	63
Peak-hour factor, PHF	0.95	0.95	0.95	0.95	0.95	0.95	0.95	0.95	0.95	0.95	0.95	0.95
Adj. Flow (vph)	120	5	136	95	3	104	71	662	82	160	728	66
RTOR Reduction (vph)	0	44	0	0	37	0	0	9	0	0	6	0
Lane Group Flow (vph)	0	217	0	0	165	0	71	735	0	160	788	0
Turn Type	Split			Split			Prot			Prot		
Protected Phases	4	4		3	3		5	2		1	6	
Permitted Phases												
Actuated Green, G (s)		12.3			9.1		6.4	21.0		7.8	22.5	
Effective Green, g (s)		12.3			9.1		6.4	22.3		7.8	23.7	
Actuated g/C Ratio		0.18			0.13		0.09	0.33		0.12	0.35	
Clearance Time (s)		4.0			4.0		4.0	5.3		4.0	5.2	
Vehicle Extension (s)		3.0			3.0		3.0	3.0		3.0	3.0	
Lane Grp Cap (vph)		309			228		162	1150		191	1227	
v/s Ratio Prot		c0.13			c0.10		0.04	0.21		c0.10	c0.23	
v/s Ratio Perm												
v/c Ratio		0.70			0.72		0.44	0.64		0.84	0.64	
Uniform Delay, d1		25.9			28.0		28.9	19.2		29.2	18.3	
Progression Factor		1.00			1.00		1.00	1.00		1.00	1.00	
Incremental Delay, d2		7.0			10.8		1.9	1.2		26.1	1.2	
Delay (s)		32.9			38.8		30.7	20.4		55.3	19.5	
Level of Service		C			D		C	C		E	B	
Approach Delay (s)		32.9			38.8			21.3			25.5	
Approach LOS		C			D			C			C	

Intersection Summary			
HCM Average Control Delay	26.0	HCM Level of Service	C
HCM Volume to Capacity ratio	0.67		
Actuated Cycle Length (s)	67.5	Sum of lost time (s)	12.0
Intersection Capacity Utilization	56.5%	ICU Level of Service	B
Analysis Period (min)	15		
c Critical Lane Group			

2017 W/ Project PM
23: I-805 NB Ramps & Murray Ridge Rd 1/15/2015

Movement	EBL	EBT	EBR	WBL	WBT	WBR	NBL	NBT	NBR	SBL	SBT	SBR
Lane Configurations												
Ideal Flow (vphpl)	1900	1900	1900	1900	1900	1900	1900	1900	1900	1900	1900	1900
Lane Width	12	12	12	16	12	16	12	16	12	12	16	11
Total Lost time (s)					4.0	4.0	4.0	4.0			4.0	
Lane Util. Factor					1.00	1.00	1.00	1.00			0.95	
Frpb, ped/bikes					1.00	1.00	1.00	1.00			1.00	
Flpb, ped/bikes					1.00	1.00	1.00	1.00			1.00	
Frt					1.00	0.85	1.00	1.00			0.94	
Flt Protected					0.95	1.00	0.95	1.00			1.00	
Satd. Flow (prot)					1770	1794	1770	2111			3767	
Flt Permitted					0.95	1.00	0.95	1.00			1.00	
Satd. Flow (perm)					1770	1794	1770	2111			3767	
Volume (vph)	0	0	0	360	0	427	753	404	0	0	572	390
Peak-hour factor, PHF	0.95	0.95	0.95	0.95	0.95	0.95	0.95	0.95	0.95	0.95	0.95	0.95
Adj. Flow (vph)	0	0	0	379	0	449	793	425	0	0	602	411
RTOR Reduction (vph)	0	0	0	0	0	350	0	0	0	0	122	0
Lane Group Flow (vph)	0	0	0	0	379	99	793	425	0	0	891	0
Confl. Peds. (#/hr)												
Turn Type				Perm		Perm	Prot					
Protected Phases					6		3	8			4	
Permitted Phases				6		6						
Actuated Green, G (s)					21.5	21.5	42.5	69.5			22.5	
Effective Green, g (s)					22.0	22.0	43.0	70.0			23.0	
Actuated g/C Ratio					0.22	0.22	0.43	0.70			0.23	
Clearance Time (s)					4.5	4.5	4.5	4.5			4.5	
Vehicle Extension (s)					3.0	3.0	3.0	3.0			3.0	
Lane Grp Cap (vph)					389	395	761	1478			866	
v/s Ratio Prot							c0.45	0.20			c0.24	
v/s Ratio Perm					0.21	0.06						
v/c Ratio					0.97	0.25	1.04	0.29			1.03	
Uniform Delay, d1					38.7	32.2	28.5	5.6			38.5	
Progression Factor					1.00	1.00	1.00	1.00			1.00	
Incremental Delay, d2					38.5	0.3	44.1	0.1			38.3	
Delay (s)					77.3	32.5	72.6	5.7			76.8	
Level of Service					E	C	E	A			E	
Approach Delay (s)		0.0			53.0			49.3			76.8	
Approach LOS		A			D			D			E	

Intersection Summary			
HCM Average Control Delay	59.4	HCM Level of Service	E
HCM Volume to Capacity ratio	1.02		
Actuated Cycle Length (s)	100.0	Sum of lost time (s)	12.0
Intersection Capacity Utilization	116.6%	ICU Level of Service	H
Analysis Period (min)	15		
c Critical Lane Group			

2017 W/ Project PM
24: I-805 SB Ramps & Murray Ridge Rd 1/15/2015

Movement	EBL	EBT	EBR	WBL	WBT	WBR	NBL	NBT	NBR	SBL	SBT	SBR
Lane Configurations												
Ideal Flow (vphpl)	1900	1900	1900	1900	1900	1900	1900	1900	1900	1900	1900	1900
Lane Width	12	14	12	12	12	12	12	16	12	12	15	12
Total Lost time (s)		4.0	4.0					4.0		4.0	4.0	
Lane Util. Factor		1.00	1.00					1.00		1.00	1.00	
Frpb, ped/bikes		1.00	1.00					1.00		1.00	1.00	
Flpb, ped/bikes		1.00	1.00					1.00		1.00	1.00	
Frt		1.00	0.85					0.96		1.00	1.00	
Flt Protected		0.95	1.00					1.00		0.95	1.00	
Satd. Flow (prot)		1888	1583					2025		1770	2049	
Flt Permitted		0.95	1.00					1.00		0.95	1.00	
Satd. Flow (perm)		1888	1583					2025		1770	2049	
Volume (vph)	304	0	756	0	0	0	0	738	320	567	437	0
Peak-hour factor, PHF	0.95	0.95	0.95	0.95	0.95	0.95	0.95	0.95	0.95	0.95	0.95	0.95
Adj. Flow (vph)	320	0	796	0	0	0	0	777	337	597	460	0
RTOR Reduction (vph)	0	0	407	0	0	0	0	10	0	0	0	0
Lane Group Flow (vph)	0	320	389	0	0	0	0	1104	0	597	460	0
Confl. Peds. (#/hr)												
Turn Type	Perm		Perm							Prot		
Protected Phases		4						2		1	6	
Permitted Phases	4		4									
Actuated Green, G (s)		27.0	27.0					67.7		40.8	112.7	
Effective Green, g (s)		28.0	28.0					69.0		41.0	114.0	
Actuated g/C Ratio		0.19	0.19					0.46		0.27	0.76	
Clearance Time (s)		5.0	5.0					5.3		4.2	5.3	
Vehicle Extension (s)		3.0	3.0					3.0		3.0	3.0	
Lane Grp Cap (vph)		352	295					932		484	1557	
v/s Ratio Prot								c0.55		c0.34	0.22	
v/s Ratio Perm		0.17	c0.25									
v/c Ratio		0.91	1.32					1.18		1.23	0.30	
Uniform Delay, d1		59.8	61.0					40.5		54.5	5.6	
Progression Factor		1.00	1.00					1.00		1.00	1.00	
Incremental Delay, d2		26.2	164.6					93.9		122.0	0.1	
Delay (s)		85.9	225.6					134.4		176.5	5.7	
Level of Service		F	F					F		F	A	
Approach Delay (s)		185.6			0.0			134.4			102.2	
Approach LOS		F			A			F			F	

Intersection Summary			
HCM Average Control Delay	141.4	HCM Level of Service	F
HCM Volume to Capacity ratio	1.23		
Actuated Cycle Length (s)	150.0	Sum of lost time (s)	12.0
Intersection Capacity Utilization	116.6%	ICU Level of Service	H
Analysis Period (min)	15		
c Critical Lane Group			

2017 W/ Project PM
25: Rio San Diego Drive & Qualcomm Wy 1/15/2015

Movement	EBL	EBT	EBR	WBL	WBT	WBR	NBL	NBT	NBR	SBL	SBT	SBR
Lane Configurations												
Ideal Flow (vphpl)	1900	1900	1900	1900	1900	1900	1900	1900	1900	1900	1900	1900
Lane Width	12	12	14	12	12	12	10	12	12	12	12	12
Total Lost time (s)	4.0	4.0	4.0	4.0	4.0	4.0	4.0	4.0		4.0	4.0	
Lane Util. Factor	0.97	1.00	1.00	0.97	0.95	1.00	0.97	0.91		0.97	0.91	
Frpb, ped/bikes	1.00	1.00	1.00	1.00	1.00	1.00	1.00	1.00		1.00	1.00	
Flpb, ped/bikes	1.00	1.00	1.00	1.00	1.00	1.00	1.00	1.00		1.00	1.00	
Frt	1.00	1.00	0.85	1.00	1.00	0.85	1.00	0.96		1.00	0.97	
Flt Protected	0.95	1.00	1.00	0.95	1.00	1.00	0.95	1.00		0.95	1.00	
Satd. Flow (prot)	3433	1863	1689	3433	3539	1583	3204	4873		3433	4953	
Flt Permitted	0.95	1.00	1.00	0.70	1.00	1.00	0.95	1.00		0.16	1.00	
Satd. Flow (perm)	3433	1863	1689	2513	3539	1583	3204	4873		569	4953	
Volume (vph)	185	90	230	691	221	254	271	1066	412	61	789	165
Peak-hour factor, PHF	0.95	0.95	0.95	0.95	0.95	0.95	0.95	0.95	0.95	0.95	0.95	0.95
Adj. Flow (vph)	195	95	242	727	233	267	285	1122	434	64	831	174
RTOR Reduction (vph)	0	0	73	0	0	78	0	66	0	0	36	0
Lane Group Flow (vph)	195	95	169	727	233	189	285	1490	0	64	969	0
Confl. Peds. (#/hr)												
Turn Type	Prot		pm+ov	Perm		Perm	Prot			Perm		
Protected Phases	5	2	3		6		3	8			4	
Permitted Phases			2	6		6				4		
Actuated Green, G (s)	4.7	37.6	44.4	28.6	28.6	28.6	6.8	35.3		24.1	24.1	
Effective Green, g (s)	5.1	38.7	45.9	29.6	29.6	29.6	7.2	36.6		25.4	25.4	
Actuated g/C Ratio	0.06	0.46	0.55	0.36	0.36	0.36	0.09	0.44		0.30	0.30	
Clearance Time (s)	4.4	5.1	4.4	5.0	5.0	5.0	4.4	5.3		5.3	5.3	
Vehicle Extension (s)	3.0	3.0	3.0	3.0	3.0	3.0	3.0	3.0		3.0	3.0	
Lane Grp Cap (vph)	210	866	1012	893	1258	563	277	2141		174	1510	
v/s Ratio Prot	c0.06	0.05	0.01		0.07		c0.09	c0.31			0.20	
v/s Ratio Perm			0.09	c0.29		0.12				0.11		
v/c Ratio	0.93	0.11	0.17	0.81	0.19	0.34	1.03	0.70		0.37	0.64	
Uniform Delay, d1	38.9	12.6	9.2	24.4	18.5	19.7	38.0	18.9		22.7	25.0	
Progression Factor	1.00	1.00	1.00	1.00	1.00	1.00	1.00	1.00		1.00	1.00	
Incremental Delay, d2	42.1	0.1	0.1	5.7	0.1	0.4	61.7	1.0		1.3	0.9	
Delay (s)	81.0	12.6	9.3	30.1	18.6	20.0	99.8	19.9		24.0	26.0	
Level of Service	F	B	A	C	B	C	F	B		C	C	
Approach Delay (s)		36.2			25.7			32.2			25.8	
Approach LOS		D			C			C			C	

Intersection Summary			
HCM Average Control Delay	29.5	HCM Level of Service	C
HCM Volume to Capacity ratio	0.78		
Actuated Cycle Length (s)	83.3	Sum of lost time (s)	12.0
Intersection Capacity Utilization	70.9%	ICU Level of Service	C
Analysis Period (min)	15		
c Critical Lane Group			

2017 W/ Project PM
26: Rio San Diego Drive & Rio Bonito Wy 1/15/2015

Movement	EBL	EBT	EBR	WBL	WBT	WBR	NBL	NBT	NBR	SBL	SBT	SBR
Lane Configurations												
Ideal Flow (vphpl)	1900	1900	1900	1900	1900	1900	1900	1900	1900	1900	1900	1900
Total Lost time (s)	4.0	4.0		4.0	4.0			4.0		4.0	4.0	
Lane Util. Factor	1.00	0.95		1.00	0.95			1.00		1.00	1.00	
Frt	1.00	1.00		1.00	1.00			0.98		1.00	0.86	
Flt Protected	0.95	1.00		0.95	1.00			0.97		0.95	1.00	
Satd. Flow (prot)	1770	3525		1770	3527			1759		1770	1595	
Flt Permitted	0.35	1.00		0.44	1.00			0.75		0.66	1.00	
Satd. Flow (perm)	658	3525		814	3527			1359		1221	1595	
Volume (vph)	41	446	12	4	580	13	111	26	30	148	5	112
Peak-hour factor, PHF	0.95	0.95	0.95	0.95	0.95	0.95	0.95	0.95	0.95	0.95	0.95	0.95
Adj. Flow (vph)	43	469	13	4	611	14	117	27	32	156	5	118
RTOR Reduction (vph)	0	2	0	0	2	0	0	9	0	0	67	0
Lane Group Flow (vph)	43	480	0	4	623	0	0	167	0	156	56	0
Turn Type	Perm			Perm			Perm			Perm		
Protected Phases		4			8			2			6	
Permitted Phases	4			8			2			6		
Actuated Green, G (s)	42.9	42.9		42.9	42.9			38.1		38.1	38.1	
Effective Green, g (s)	43.4	43.4		43.4	43.4			38.6		38.6	38.6	
Actuated g/C Ratio	0.48	0.48		0.48	0.48			0.43		0.43	0.43	
Clearance Time (s)	4.5	4.5		4.5	4.5			4.5		4.5	4.5	
Lane Grp Cap (vph)	317	1700		393	1701			583		524	684	
v/s Ratio Prot		0.14			c0.18						0.03	
v/s Ratio Perm	0.07			0.00				0.12		c0.13		
v/c Ratio	0.14	0.28		0.01	0.37			0.29		0.30	0.08	
Uniform Delay, d1	12.9	14.0		12.1	14.7			16.7		16.8	15.2	
Progression Factor	1.00	1.00		1.00	1.00			1.00		1.00	1.00	
Incremental Delay, d2	0.9	0.4		0.0	0.6			1.2		1.4	0.2	
Delay (s)	13.8	14.4		12.2	15.3			18.0		18.3	15.4	
Level of Service	B	B		B	B			B		B	B	
Approach Delay (s)		14.3			15.2			18.0			17.0	
Approach LOS		B			B			B			B	

Intersection Summary			
HCM Average Control Delay	15.6	HCM Level of Service	B
HCM Volume to Capacity ratio	0.33		
Actuated Cycle Length (s)	90.0	Sum of lost time (s)	8.0
Intersection Capacity Utilization	45.8%	ICU Level of Service	A
Analysis Period (min)	15		
c Critical Lane Group			

2017 W/ Project PM
50: Phyllis Pl & 1/22/2015

Movement	EBT	EBR	WBL	WBT	NBL	NBR
Lane Configurations						
Ideal Flow (vphpl)	1900	1900	1900	1900	1900	1900
Total Lost time (s)	4.0		4.0	4.0	4.0	4.0
Lane Util. Factor	0.95		0.97	1.00	1.00	0.88
Frt	0.93		1.00	1.00	1.00	0.85
Flt Protected	1.00		0.95	1.00	0.95	1.00
Satd. Flow (prot)	3304		3433	1863	1770	2787
Flt Permitted	1.00		0.95	1.00	0.95	1.00
Satd. Flow (perm)	3304		3433	1863	1770	2787
Volume (vph)	42	33	1109	60	41	1014
Peak-hour factor, PHF	0.95	0.95	0.95	0.95	0.95	0.95
Adj. Flow (vph)	44	35	1167	63	43	1067
RTOR Reduction (vph)	32	0	0	0	0	257
Lane Group Flow (vph)	47	0	1167	63	43	810
Turn Type			Prot			pm+ov
Protected Phases	4		3	8	2	3
Permitted Phases						2
Actuated Green, G (s)	5.1		35.3	44.9	19.1	54.4
Effective Green, g (s)	5.6		35.8	45.4	19.6	55.4
Actuated g/C Ratio	0.08		0.49	0.62	0.27	0.76
Clearance Time (s)	4.5		4.5	4.5	4.5	4.5
Vehicle Extension (s)	3.0		3.0	3.0	3.0	3.0
Lane Grp Cap (vph)	253		1684	1159	475	2268
v/s Ratio Prot	c0.01		c0.34	0.03	0.02	c0.18
v/s Ratio Perm						0.12
v/c Ratio	0.18		0.69	0.05	0.09	0.36
Uniform Delay, d1	31.6		14.4	5.4	20.0	2.9
Progression Factor	1.00		1.00	1.00	1.00	1.00
Incremental Delay, d2	0.4		1.3	0.0	0.4	0.1
Delay (s)	31.9		15.6	5.4	20.4	3.0
Level of Service	C		B	A	C	A
Approach Delay (s)	31.9			15.1	3.7	
Approach LOS	C			B	A	

Intersection Summary			
HCM Average Control Delay	10.4	HCM Level of Service	B
HCM Volume to Capacity ratio	0.55		
Actuated Cycle Length (s)	73.0	Sum of lost time (s)	12.0
Intersection Capacity Utilization	48.3%	ICU Level of Service	A
Analysis Period (min)	15		
c Critical Lane Group			

2017 W/ Project PM
51: Via Alta & 1/22/2015

Movement	EBL	EBT	EBR	WBL	WBT	WBR	NBL	NBT	NBR	SBL	SBT	SBR
Lane Configurations												
Ideal Flow (vphpl)	1900	1900	1900	1900	1900	1900	1900	1900	1900	1900	1900	1900
Total Lost time (s)	4.0	4.0			4.0		4.0	4.0		4.0	4.0	4.0
Lane Util. Factor	1.00	1.00			1.00		1.00	1.00		1.00	1.00	1.00
Frt	1.00	0.88			0.98		1.00	1.00		1.00	1.00	0.85
Flt Protected	0.95	1.00			0.99		0.95	1.00		0.95	1.00	1.00
Satd. Flow (prot)	1770	1638			1802		1770	1856		1770	1863	1583
Flt Permitted	0.95	1.00			0.99		0.95	1.00		0.95	1.00	1.00
Satd. Flow (perm)	1770	1638			1802		1770	1856		1770	1863	1583
Volume (vph)	413	10	43	3	10	3	50	606	15	7	608	528
Peak-hour factor, PHF	0.95	0.95	0.95	0.95	0.95	0.95	0.95	0.95	0.95	0.95	0.95	0.95
Adj. Flow (vph)	435	11	45	3	11	3	53	638	16	7	640	556
RTOR Reduction (vph)	0	33	0	0	3	0	0	0	0	0	0	239
Lane Group Flow (vph)	435	23	0	0	14	0	53	654	0	7	640	317
Turn Type	Split			Split			Prot			Prot		Perm
Protected Phases	4	4		8	8		5	2		1	6	
Permitted Phases												6
Actuated Green, G (s)	26.7	26.7			2.7		5.5	51.4		0.7	46.6	46.6
Effective Green, g (s)	27.2	27.2			3.2		6.0	51.9		1.2	47.1	47.1
Actuated g/C Ratio	0.27	0.27			0.03		0.06	0.52		0.01	0.47	0.47
Clearance Time (s)	4.5	4.5			4.5		4.5	4.5		4.5	4.5	4.5
Vehicle Extension (s)	3.0	3.0			3.0		3.0	3.0		3.0	3.0	3.0
Lane Grp Cap (vph)	484	448			58		107	968		21	882	749
v/s Ratio Prot	c0.25	0.01			c0.01		c0.03	0.35		0.00	c0.34	
v/s Ratio Perm												0.20
v/c Ratio	0.90	0.05			0.24		0.50	0.68		0.33	0.73	0.42
Uniform Delay, d1	34.8	26.6			47.0		45.3	17.6		48.8	21.0	17.3
Progression Factor	1.00	1.00			1.00		1.00	1.00		1.00	1.00	1.00
Incremental Delay, d2	19.2	0.0			2.2		3.6	3.8		9.1	3.0	0.4
Delay (s)	54.0	26.7			49.1		48.9	21.3		57.9	24.0	17.6
Level of Service	D	C			D		D	C		E	C	B
Approach Delay (s)		50.9			49.1			23.4			21.3	
Approach LOS		D			D			C			C	

Intersection Summary			
HCM Average Control Delay	28.1	HCM Level of Service	C
HCM Volume to Capacity ratio	0.75		
Actuated Cycle Length (s)	99.5	Sum of lost time (s)	16.0
Intersection Capacity Utilization	75.7%	ICU Level of Service	D
Analysis Period (min)	15		

c Critical Lane Group

2017 W/ Project PM
53: Civitas & Via Alta 1/15/2015

Movement	EBL	EBT	EBR	WBL	WBT	WBR	NBL	NBT	NBR	SBL	SBT	SBR
Lane Configurations												
Ideal Flow (vphpl)	1900	1900	1900	1900	1900	1900	1900	1900	1900	1900	1900	1900
Total Lost time (s)	4.0	4.0		4.0	4.0		4.0	4.0		4.0	4.0	
Lane Util. Factor	1.00	0.95		1.00	0.95		1.00	1.00		1.00	1.00	
Frt	1.00	0.96		1.00	0.88		1.00	0.97		1.00	0.93	
Flt Protected	0.95	1.00		0.95	1.00		0.95	1.00		0.95	1.00	
Satd. Flow (prot)	1770	3398		1770	3120		1770	1802		1770	1723	
Flt Permitted	0.42	1.00		0.58	1.00		0.54	1.00		0.57	1.00	
Satd. Flow (perm)	779	3398		1085	3120		1013	1802		1054	1723	
Volume (vph)	203	192	69	84	105	397	34	158	44	193	109	109
Peak-hour factor, PHF	0.95	0.95	0.95	0.95	0.95	0.95	0.95	0.95	0.95	0.95	0.95	0.95
Adj. Flow (vph)	214	202	73	88	111	418	36	166	46	203	115	115
RTOR Reduction (vph)	0	35	0	0	200	0	0	11	0	0	40	0
Lane Group Flow (vph)	214	240	0	88	329	0	36	201	0	203	190	0
Turn Type	Perm			Perm			Perm			Perm		
Protected Phases		4			8			2			6	
Permitted Phases	4			8			2			6		
Actuated Green, G (s)	46.5	46.5		46.5	46.5		34.5	34.5		34.5	34.5	
Effective Green, g (s)	47.0	47.0		47.0	47.0		35.0	35.0		35.0	35.0	
Actuated g/C Ratio	0.52	0.52		0.52	0.52		0.39	0.39		0.39	0.39	
Clearance Time (s)	4.5	4.5		4.5	4.5		4.5	4.5		4.5	4.5	
Lane Grp Cap (vph)	407	1775		567	1629		394	701		410	670	
v/s Ratio Prot		0.07			0.11			0.11			0.11	
v/s Ratio Perm	c0.27			0.08			0.04			c0.19		
v/c Ratio	0.53	0.14		0.16	0.20		0.09	0.29		0.50	0.28	
Uniform Delay, d1	14.2	11.1		11.2	11.5		17.4	18.9		20.8	18.9	
Progression Factor	1.00	1.00		0.71	2.13		1.00	1.00		1.00	1.00	
Incremental Delay, d2	4.8	0.2		0.5	0.2		0.5	1.0		4.2	1.1	
Delay (s)	19.0	11.2		8.5	24.7		17.9	19.9		25.0	20.0	
Level of Service	B	B		A	C		B	B		C	B	
Approach Delay (s)		14.6			22.3			19.6			22.3	
Approach LOS		B			C			B			C	

Intersection Summary			
HCM Average Control Delay	19.8	HCM Level of Service	B
HCM Volume to Capacity ratio	0.51		
Actuated Cycle Length (s)	90.0	Sum of lost time (s)	8.0
Intersection Capacity Utilization	62.0%	ICU Level of Service	B
Analysis Period (min)	15		

c Critical Lane Group

2017 W/ Project PM
54: Civitas & Gill Village Way 1/15/2015

Movement	EBT	EBR	WBL	WBT	NBL	NBR
Lane Configurations						
Ideal Flow (vphpl)	1900	1900	1900	1900	1900	1900
Total Lost time (s)	4.0		4.0	4.0	4.0	4.0
Lane Util. Factor	0.95		1.00	0.95	1.00	1.00
Frt	0.95		1.00	1.00	1.00	0.85
Flt Protected	1.00		0.95	1.00	0.95	1.00
Satd. Flow (prot)	3378		1770	3539	1770	1583
Flt Permitted	1.00		0.45	1.00	0.95	1.00
Satd. Flow (perm)	3378		830	3539	1770	1583
Volume (vph)	306	134	215	103	483	196
Peak-hour factor, PHF	0.95	0.95	0.95	0.95	0.95	0.95
Adj. Flow (vph)	322	141	226	108	508	206
RTOR Reduction (vph)	55	0	0	0	0	115
Lane Group Flow (vph)	408	0	226	108	508	91
Turn Type			Perm			Perm
Protected Phases	4			8	2	
Permitted Phases			8			2
Actuated Green, G (s)	41.7		41.7	41.7	39.3	39.3
Effective Green, g (s)	42.2		42.2	42.2	39.8	39.8
Actuated g/C Ratio	0.47		0.47	0.47	0.44	0.44
Clearance Time (s)	4.5		4.5	4.5	4.5	4.5
Lane Grp Cap (vph)	1584		389	1659	783	700
v/s Ratio Prot	0.12			0.03	c0.29	
v/s Ratio Perm			c0.27			0.06
v/c Ratio	0.26		0.58	0.07	0.65	0.13
Uniform Delay, d1	14.4		17.4	13.1	19.6	14.9
Progression Factor	0.95		1.00	1.00	1.00	1.00
Incremental Delay, d2	0.4		6.2	0.1	4.1	0.4
Delay (s)	14.1		23.7	13.2	23.8	15.2
Level of Service	B		C	B	C	B
Approach Delay (s)	14.1			20.3	21.3	
Approach LOS	B			C	C	

Intersection Summary			
HCM Average Control Delay	18.9	HCM Level of Service	B
HCM Volume to Capacity ratio	0.61		
Actuated Cycle Length (s)	90.0	Sum of lost time (s)	8.0
Intersection Capacity Utilization	61.4%	ICU Level of Service	B
Analysis Period (min)	15		

c Critical Lane Group

2017 W/ Project PM
55: Via Alta & Mission Center Rd 1/15/2015

Movement	EBL	EBT	EBR	WBL	WBT	WBR	NBL	NBT	NBR	SBL	SBT	SBR
Lane Configurations												
Ideal Flow (vphpl)	1900	1900	1900	1900	1900	1900	1900	1900	1900	1900	1900	1900
Total Lost time (s)		4.0	4.0	4.0	4.0		4.0	4.0	4.0	4.0	4.0	
Lane Util. Factor		1.00	1.00	1.00	1.00		0.97	0.91	1.00	1.00	0.95	
Frt		1.00	0.85	1.00	0.99		1.00	1.00	0.85	1.00	0.99	
Flt Protected		0.98	1.00	0.95	1.00		0.95	1.00	1.00	0.95	1.00	
Satd. Flow (prot)		1827	1583	1770	1843		3433	5085	1583	1770	3507	
Flt Permitted		0.86	1.00	0.58	1.00		0.29	1.00	1.00	0.30	1.00	
Satd. Flow (perm)		1597	1583	1084	1843		1057	5085	1583	563	3507	
Volume (vph)	67	103	232	137	74	6	266	782	125	139	716	46
Peak-hour factor, PHF	0.95	0.95	0.95	0.95	0.95	0.95	0.95	0.95	0.95	0.95	0.95	0.95
Adj. Flow (vph)	71	108	244	144	78	6	280	823	132	146	754	48
RTOR Reduction (vph)	0	0	127	0	3	0	0	0	56	0	4	0
Lane Group Flow (vph)	0	179	117	144	81	0	280	823	76	146	798	0
Turn Type	Perm		Perm	Perm			Perm		Perm	Perm		
Protected Phases		4			8			2			6	
Permitted Phases	4		4	8			2		2	6		
Actuated Green, G (s)		36.2	36.2	36.2	36.2		59.8	59.8	59.8	59.8	59.8	
Effective Green, g (s)		36.7	36.7	36.7	36.7		60.3	60.3	60.3	60.3	60.3	
Actuated g/C Ratio		0.35	0.35	0.35	0.35		0.57	0.57	0.57	0.57	0.57	
Clearance Time (s)		4.5	4.5	4.5	4.5		4.5	4.5	4.5	4.5	4.5	
Lane Grp Cap (vph)		558	553	379	644		607	2920	909	323	2014	
v/s Ratio Prot					0.04			0.16			0.23	
v/s Ratio Perm		0.11	0.07	c0.13			c0.26		0.05	0.26		
v/c Ratio		0.32	0.21	0.38	0.13		0.46	0.28	0.08	0.45	0.40	
Uniform Delay, d1		25.0	24.0	25.6	23.2		12.9	11.4	10.0	12.9	12.3	
Progression Factor		1.00	1.00	1.00	1.00		1.00	1.00	1.00	1.00	1.00	
Incremental Delay, d2		1.5	0.9	2.9	0.4		2.5	0.2	0.2	4.5	0.6	
Delay (s)		26.5	24.8	28.5	23.6		15.5	11.6	10.2	17.4	12.9	
Level of Service		C	C	C	C		B	B	B	B	B	
Approach Delay (s)		25.6			26.7			12.3			13.6	
Approach LOS		C			C			B			B	

Intersection Summary			
HCM Average Control Delay	15.9	HCM Level of Service	B
HCM Volume to Capacity ratio	0.43		
Actuated Cycle Length (s)	105.0	Sum of lost time (s)	8.0
Intersection Capacity Utilization	54.6%	ICU Level of Service	A
Analysis Period (min)	15		

c Critical Lane Group

2017 W/ Project PM
56: Aquatera Driveway & 1/15/2015

Movement	EBL	EBT	EBR	WBL	WBT	WBR	NBL	NBT	NBR	SBL	SBT	SBR
Lane Configurations												
Ideal Flow (vphpl)	1900	1900	1900	1900	1900	1900	1900	1900	1900	1900	1900	1900
Total Lost time (s)		4.0		4.0	4.0		4.0	4.0	4.0	4.0	4.0	
Lane Util. Factor		1.00		0.95	0.95		1.00	0.95	1.00	1.00	0.95	
Frt		0.88		1.00	0.85		1.00	1.00	0.85	1.00	0.99	
Flt Protected		1.00		0.95	1.00		0.95	1.00	1.00	0.95	1.00	
Satd. Flow (prot)		1630		1681	1504		1770	3539	1583	1770	3509	
Flt Permitted		1.00		0.73	1.00		0.35	1.00	1.00	0.41	1.00	
Satd. Flow (perm)		1630		1294	1504		645	3539	1583	772	3509	
Volume (vph)	0	3	35	20	0	15	19	483	41	17	561	34
Peak-hour factor, PHF	0.95	0.95	0.95	0.95	0.95	0.95	0.95	0.95	0.95	0.95	0.95	0.95
Adj. Flow (vph)	0	3	37	21	0	16	20	508	43	18	591	36
RTOR Reduction (vph)	0	21	0	0	9	0	0	0	22	0	4	0
Lane Group Flow (vph)	0	19	0	21	7	0	20	508	21	18	623	0
Turn Type	Perm			Perm			Perm		Perm	Perm		
Protected Phases		4			8			2			6	
Permitted Phases	4			8			2		2	6		
Actuated Green, G (s)		46.0		46.0	46.0		50.0	50.0	50.0	50.0	50.0	
Effective Green, g (s)		46.5		46.5	46.5		50.5	50.5	50.5	50.5	50.5	
Actuated g/C Ratio		0.44		0.44	0.44		0.48	0.48	0.48	0.48	0.48	
Clearance Time (s)		4.5		4.5	4.5		4.5	4.5	4.5	4.5	4.5	
Lane Grp Cap (vph)		722		573	666		310	1702	761	371	1688	
v/s Ratio Prot		0.01						0.14			c0.18	
v/s Ratio Perm				c0.02	0.00		0.03		0.01	0.02		
v/c Ratio		0.03		0.04	0.01		0.06	0.30	0.03	0.05	0.37	
Uniform Delay, d1		16.5		16.6	16.4		14.6	16.5	14.3	14.5	17.2	
Progression Factor		1.00		1.00	1.00		1.00	1.00	1.00	1.00	1.00	
Incremental Delay, d2		0.1		0.1	0.0		0.4	0.4	0.1	0.2	0.6	
Delay (s)		16.6		16.7	16.4		15.0	17.0	14.4	14.7	17.8	
Level of Service		B		B	B		B	B	B	B	B	
Approach Delay (s)		16.6			16.6			16.7			17.7	
Approach LOS		B			B			B			B	

Intersection Summary			
HCM Average Control Delay	17.2	HCM Level of Service	B
HCM Volume to Capacity ratio	0.21		
Actuated Cycle Length (s)	105.0	Sum of lost time (s)	8.0
Intersection Capacity Utilization	30.9%	ICU Level of Service	A
Analysis Period (min)	15		

c Critical Lane Group

2017 W/ Project PM
57: Pinecrest & Murray Ridge Rd 1/15/2015

Movement	EBL	EBT	EBR	WBL	WBT	WBR	NBL	NBT	NBR	SBL	SBT	SBR
Lane Configurations												
Ideal Flow (vphpl)	1900	1900	1900	1900	1900	1900	1900	1900	1900	1900	1900	1900
Total Lost time (s)		4.0			4.0		4.0	4.0		4.0	4.0	
Lane Util. Factor		1.00			1.00		1.00	1.00		1.00	1.00	
Frt		0.88			0.99		1.00	0.99		1.00	1.00	
Flt Protected		1.00			0.96		0.95	1.00		0.95	1.00	
Satd. Flow (prot)		1637			1768		1770	1849		1770	1860	
Flt Permitted		0.98			0.69		0.30	1.00		0.27	1.00	
Satd. Flow (perm)		1610			1267		552	1849		506	1860	
Volume (vph)	24	16	272	40	4	4	44	591	30	10	582	5
Peak-hour factor, PHF	0.95	0.95	0.95	0.95	0.95	0.95	0.95	0.95	0.95	0.95	0.95	0.95
Adj. Flow (vph)	25	17	286	42	4	4	46	622	32	11	613	5
RTOR Reduction (vph)	0	180	0	0	3	0	0	2	0	0	0	0
Lane Group Flow (vph)	0	148	0	0	47	0	46	652	0	11	618	0
Turn Type	Perm			Perm			Perm			Perm		
Protected Phases		4			8			2			6	
Permitted Phases	4			8			2			6		
Actuated Green, G (s)		29.9			29.9		51.1	51.1		51.1	51.1	
Effective Green, g (s)		30.4			30.4		51.6	51.6		51.6	51.6	
Actuated g/C Ratio		0.34			0.34		0.57	0.57		0.57	0.57	
Clearance Time (s)		4.5			4.5		4.5	4.5		4.5	4.5	
Lane Grp Cap (vph)		544			428		316	1060		290	1066	
v/s Ratio Prot								c0.35			0.33	
v/s Ratio Perm		c0.09			0.04		0.08			0.02		
v/c Ratio		0.27			0.11		0.15	0.61		0.04	0.58	
Uniform Delay, d1		21.7			20.5		8.9	12.7		8.4	12.3	
Progression Factor		1.00			1.00		1.00	1.00		1.00	1.00	
Incremental Delay, d2		1.2			0.5		1.0	2.7		0.2	2.3	
Delay (s)		23.0			21.0		9.9	15.3		8.6	14.6	
Level of Service		C			C		A	B		A	B	
Approach Delay (s)		23.0			21.0			15.0			14.5	
Approach LOS		C			C			B			B	

Intersection Summary			
HCM Average Control Delay	16.5	HCM Level of Service	B
HCM Volume to Capacity ratio	0.49		
Actuated Cycle Length (s)	90.0	Sum of lost time (s)	8.0
Intersection Capacity Utilization	61.7%	ICU Level of Service	B
Analysis Period (min)	15		

c Critical Lane Group

2017 W/ Project PM
58: Murray Ridge Rd Ave & Sandrock Rd 1/15/2015

Movement	EBL	EBT	EBR	WBL	WBT	WBR	NBL	NBT	NBR	SBL	SBT	SBR
Lane Configurations												
Ideal Flow (vphpl)	1900	1900	1900	1900	1900	1900	1900	1900	1900	1900	1900	1900
Total Lost time (s)	4.0	4.0	4.0		4.0		4.0	4.0		4.0	4.0	
Lane Util. Factor	1.00	1.00	1.00		1.00		1.00	1.00		1.00	1.00	
Frt	1.00	1.00	0.85		0.96		1.00	0.98		1.00	0.92	
Flt Protected	0.95	1.00	1.00		0.99		0.95	1.00		0.95	1.00	
Satd. Flow (prot)	1770	1863	1583		1775		1770	1831		1770	1708	
Flt Permitted	0.54	1.00	1.00		0.96		0.07	1.00		0.59	1.00	
Satd. Flow (perm)	1000	1863	1583		1711		124	1831		1107	1708	
Volume (vph)	198	132	183	20	96	51	92	212	28	64	497	614
Peak-hour factor, PHF	0.95	0.95	0.95	0.95	0.95	0.95	0.95	0.95	0.95	0.95	0.95	0.95
Adj. Flow (vph)	208	139	193	21	101	54	97	223	29	67	523	646
RTOR Reduction (vph)	0	0	146	0	17	0	0	5	0	0	49	0
Lane Group Flow (vph)	208	139	47	0	159	0	97	247	0	67	1120	0
Turn Type	Perm		Perm	Perm			Perm			Perm		
Protected Phases		4			8			2			6	
Permitted Phases	4		4	8			2			6		
Actuated Green, G (s)	21.5	21.5	21.5		21.5		59.5	59.5		59.5	59.5	
Effective Green, g (s)	22.0	22.0	22.0		22.0		60.0	60.0		60.0	60.0	
Actuated g/C Ratio	0.24	0.24	0.24		0.24		0.67	0.67		0.67	0.67	
Clearance Time (s)	4.5	4.5	4.5		4.5		4.5	4.5		4.5	4.5	
Lane Grp Cap (vph)	244	455	387		418		83	1221		738	1139	
v/s Ratio Prot		0.07						0.13			0.66	
v/s Ratio Perm	c0.21		0.03		0.09		c0.78			0.06		
v/c Ratio	0.85	0.31	0.12		0.38		1.17	0.20		0.09	0.98	
Uniform Delay, d1	32.5	27.8	26.5		28.3		15.0	5.8		5.3	14.5	
Progression Factor	1.00	1.00	1.00		1.00		1.00	1.00		1.00	1.00	
Incremental Delay, d2	29.5	1.7	0.6		2.6		151.3	0.4		0.2	22.9	
Delay (s)	62.0	29.5	27.1		30.9		166.3	6.2		5.6	37.4	
Level of Service	E	C	C		C		F	A		A	D	
Approach Delay (s)		41.2			30.9			50.7			35.7	
Approach LOS		D			C			D			D	

Intersection Summary			
HCM Average Control Delay	38.9	HCM Level of Service	D
HCM Volume to Capacity ratio	1.09		
Actuated Cycle Length (s)	90.0	Sum of lost time (s)	8.0
Intersection Capacity Utilization	102.4%	ICU Level of Service	G
Analysis Period (min)	15		

c Critical Lane Group

2017 W/ Project PM
59: Aero Dr & Sandrock Rd 1/15/2015

Movement	EBL	EBT	EBR	WBL	WBT	WBR	NBL	NBT	NBR	SBL	SBT	SBR
Lane Configurations												
Ideal Flow (vphpl)	1900	1900	1900	1900	1900	1900	1900	1900	1900	1900	1900	1900
Total Lost time (s)	4.0	4.0	4.0	4.0	4.0		4.0	4.0	4.0	4.0	4.0	
Lane Util. Factor	1.00	0.95	1.00	1.00	0.95		0.95	0.95	1.00	1.00	1.00	
Frt	1.00	1.00	0.85	1.00	0.94		1.00	1.00	0.85	1.00	0.98	
Flt Protected	0.95	1.00	1.00	0.95	1.00		0.95	0.97	1.00	0.95	1.00	
Satd. Flow (prot)	1770	3539	1583	1770	3331		1681	1710	1583	1770	1825	
Flt Permitted	0.52	1.00	1.00	0.26	1.00		0.56	0.60	1.00	0.55	1.00	
Satd. Flow (perm)	971	3539	1583	485	3331		990	1054	1583	1023	1825	
Volume (vph)	48	898	399	250	225	145	254	55	259	171	161	25
Peak-hour factor, PHF	0.95	0.95	0.95	0.95	0.95	0.95	0.95	0.95	0.95	0.95	0.95	0.95
Adj. Flow (vph)	51	945	420	263	237	153	267	58	273	180	169	26
RTOR Reduction (vph)	0	0	160	0	58	0	0	0	117	0	6	0
Lane Group Flow (vph)	51	945	260	263	332	0	134	191	156	180	189	0
Turn Type	Perm		Perm	Perm			Perm		Perm	Perm		
Protected Phases		4			8			2			6	
Permitted Phases	4		4	8			2		2	6		
Actuated Green, G (s)	42.1	42.1	42.1	42.1	42.1		17.6	17.6	17.6	17.6	17.6	
Effective Green, g (s)	42.6	42.6	42.6	42.6	42.6		18.1	18.1	18.1	18.1	18.1	
Actuated g/C Ratio	0.62	0.62	0.62	0.62	0.62		0.26	0.26	0.26	0.26	0.26	
Clearance Time (s)	4.5	4.5	4.5	4.5	4.5		4.5	4.5	4.5	4.5	4.5	
Vehicle Extension (s)	3.0	3.0	3.0	3.0	3.0		3.0	3.0	3.0	3.0	3.0	
Lane Grp Cap (vph)	602	2194	982	301	2066		261	278	417	270	481	
v/s Ratio Prot		0.27			0.10						0.10	
v/s Ratio Perm	0.05		0.16	c0.54			0.14	c0.18	0.10	0.18		
v/c Ratio	0.08	0.43	0.27	0.87	0.16		0.51	0.69	0.37	0.67	0.39	
Uniform Delay, d1	5.2	6.8	5.9	10.8	5.5		21.5	22.8	20.7	22.6	20.8	
Progression Factor	1.00	1.00	1.00	1.00	1.00		1.00	1.00	1.00	1.00	1.00	
Incremental Delay, d2	0.1	0.1	0.1	23.3	0.0		1.7	6.9	0.6	6.1	0.5	
Delay (s)	5.3	6.9	6.1	34.1	5.5		23.3	29.6	21.2	28.7	21.3	
Level of Service	A	A	A	C	A		C	C	C	C	C	
Approach Delay (s)		6.6			17.0			24.4			24.9	
Approach LOS		A			B			C			C	

Intersection Summary			
HCM Average Control Delay	14.6	HCM Level of Service	B
HCM Volume to Capacity ratio	0.82		
Actuated Cycle Length (s)	68.7	Sum of lost time (s)	8.0
Intersection Capacity Utilization	70.5%	ICU Level of Service	C
Analysis Period (min)	15		

c Critical Lane Group

APPENDIX H

PEAK HOUR INTERSECTION
OPENING DAY (2017) WITH CONNECTION CONDITIONS
-MITIGATIONS-

2017 AM Pk Hr — W/ Project Mitigated

8: Friars Rd WB Ramps & Qualcomm Wy — 1/28/2015

Movement	EBL	EBT	EBR	WBL	WBT	WBR	NBL	NBT	NBR	SBL	SBT	SBR
Lane Configurations												
Ideal Flow (vphpl)	1900	1900	1900	1900	1900	1900	1900	1900	1900	1900	1900	1900
Lane Width	12	12	12	12	16	12	12	11	12	12	16	16
Total Lost time (s)				4.0	4.0		4.0	4.0			4.0	4.0
Lane Util. Factor				0.95	0.95		0.97	0.95			0.91	1.00
Frpb, ped/bikes				1.00	1.00		1.00	1.00			1.00	1.00
Flpb, ped/bikes				1.00	1.00		1.00	1.00			1.00	1.00
Frt				1.00	0.91		1.00	1.00			1.00	0.85
Flt Protected				0.95	0.98		0.95	1.00			1.00	1.00
Satd. Flow (prot)				1681	1790		3433	3421			5763	1794
Flt Permitted				0.95	0.98		0.95	1.00			1.00	1.00
Satd. Flow (perm)				1681	1790		3433	3421			5763	1794
Volume (vph)	0	0	0	274	0	128	372	279	0	0	492	172
Peak-hour factor, PHF	0.95	0.95	0.95	0.95	0.95	0.95	0.95	0.95	0.95	0.95	0.95	0.95
Adj. Flow (vph)	0	0	0	288	0	135	392	294	0	0	518	181
RTOR Reduction (vph)	0	0	0	0	70	0	0	0	0	0	0	147
Lane Group Flow (vph)	0	0	0	197	156	0	392	294	0	0	518	34
Confl. Peds. (#/hr)												
Turn Type				Perm			Prot					Prot
Protected Phases					8		5	2			6	6
Permitted Phases				8								
Actuated Green, G (s)				16.4	16.4		42.8	63.6			16.1	16.1
Effective Green, g (s)				17.3	17.3		43.7	64.7			17.0	17.0
Actuated g/C Ratio				0.19	0.19		0.49	0.72			0.19	0.19
Clearance Time (s)				4.9	4.9		4.9	5.1			4.9	4.9
Vehicle Extension (s)				3.0	3.0		3.0	3.0			3.0	3.0
Lane Grp Cap (vph)				323	344		1667	2459			1089	339
v/s Ratio Prot							c0.11	0.09			c0.09	0.02
v/s Ratio Perm				c0.12	0.09							
v/c Ratio				0.61	0.45		0.24	0.12			0.48	0.10
Uniform Delay, d1				33.3	32.2		13.4	3.9			32.5	30.2
Progression Factor				1.00	1.00		1.00	1.00			1.00	1.00
Incremental Delay, d2				3.3	0.9		0.3	0.1			0.3	0.1
Delay (s)				36.5	33.1		13.8	4.0			32.9	30.3
Level of Service				D	C		B	A			C	C
Approach Delay (s)		0.0			34.7			9.6			32.2	
Approach LOS		A			C			A			C	

Intersection Summary			
HCM Average Control Delay	24.2	HCM Level of Service	C
HCM Volume to Capacity ratio	0.37		
Actuated Cycle Length (s)	90.0	Sum of lost time (s)	12.0
Intersection Capacity Utilization	42.8%	ICU Level of Service	A
Analysis Period (min)	15		
c Critical Lane Group			

2017 AM Pk Hr — W/ Project Mitigated

23: I-805 NB Ramps & Murray Ridge Rd — 1/28/2015

Movement	EBL	EBT	EBR	WBL	WBT	WBR	NBL	NBT	NBR	SBL	SBT	SBR
Lane Configurations												
Ideal Flow (vphpl)	1900	1900	1900	1900	1900	1900	1900	1900	1900	1900	1900	1900
Lane Width	12	12	12	16	12	16	12	16	12	12	16	11
Total Lost time (s)					4.0	4.0	4.0	4.0			4.0	
Lane Util. Factor					1.00	1.00	0.97	1.00			0.95	
Frpb, ped/bikes					1.00	1.00	1.00	1.00			1.00	
Flpb, ped/bikes					1.00	1.00	1.00	1.00			1.00	
Frt					1.00	0.85	1.00	1.00			0.94	
Flt Protected					0.95	1.00	0.95	1.00			1.00	
Satd. Flow (prot)					1770	1794	3433	2111			3779	
Flt Permitted					0.95	1.00	0.95	1.00			1.00	
Satd. Flow (perm)					1770	1794	3433	2111			3779	
Volume (vph)	0	0	0	192	0	326	567	273	0	0	432	271
Peak-hour factor, PHF	0.95	0.95	0.95	0.95	0.95	0.95	0.95	0.95	0.95	0.95	0.95	0.95
Adj. Flow (vph)	0	0	0	202	0	343	597	287	0	0	455	285
RTOR Reduction (vph)	0	0	0	0	0	267	0	0	0	0	98	0
Lane Group Flow (vph)	0	0	0	0	202	76	597	287	0	0	642	0
Confl. Peds. (#/hr)												
Turn Type				Perm		Perm	Prot					
Protected Phases					6		3	8			4	
Permitted Phases				6		6						
Actuated Green, G (s)					11.7	11.7	14.9	34.1			14.7	
Effective Green, g (s)					12.2	12.2	15.4	34.6			15.2	
Actuated g/C Ratio					0.22	0.22	0.28	0.63			0.28	
Clearance Time (s)					4.5	4.5	4.5	4.5			4.5	
Vehicle Extension (s)					3.0	3.0	3.0	3.0			3.0	
Lane Grp Cap (vph)					394	399	965	1333			1048	
v/s Ratio Prot							c0.17	0.14			c0.17	
v/s Ratio Perm					0.11	0.04						
v/c Ratio					0.51	0.19	0.62	0.22			0.61	
Uniform Delay, d1					18.7	17.3	17.1	4.3			17.2	
Progression Factor					1.00	1.00	1.00	1.00			1.00	
Incremental Delay, d2					1.1	0.2	1.2	0.1			1.1	
Delay (s)					19.8	17.5	18.3	4.4			18.3	
Level of Service					B	B	B	A			B	
Approach Delay (s)		0.0			18.4			13.8			18.3	
Approach LOS		A			B			B			B	

Intersection Summary			
HCM Average Control Delay	16.5	HCM Level of Service	B
HCM Volume to Capacity ratio	0.59		
Actuated Cycle Length (s)	54.8	Sum of lost time (s)	12.0
Intersection Capacity Utilization	62.6%	ICU Level of Service	B
Analysis Period (min)	15		
c Critical Lane Group			

2017 AM Pk Hr — W/ Project Mitigated

24: I-805 SB Ramps & Murray Ridge Rd — 1/28/2015

Movement	EBL	EBT	EBR	WBL	WBT	WBR	NBL	NBT	NBR	SBL	SBT	SBR
Lane Configurations												
Ideal Flow (vphpl)	1900	1900	1900	1900	1900	1900	1900	1900	1900	1900	1900	1900
Lane Width	12	14	12	12	12	12	12	16	12	12	15	12
Total Lost time (s)	4.0	4.0						4.0	4.0	4.0	4.0	
Lane Util. Factor	0.97	1.00						0.95	1.00	0.97	1.00	
Frpb, ped/bikes	1.00	1.00						1.00	1.00	1.00	1.00	
Flpb, ped/bikes	1.00	1.00						1.00	1.00	1.00	1.00	
Frt	1.00	0.85						1.00	0.85	1.00	1.00	
Flt Protected	0.95	1.00						1.00	1.00	0.95	1.00	
Satd. Flow (prot)	3433	1689						4011	1583	3433	2049	
Flt Permitted	0.95	1.00						1.00	1.00	0.95	1.00	
Satd. Flow (perm)	3433	1689						4011	1583	3433	2049	
Volume (vph)	172	0	417	0	0	0	0	586	251	371	300	0
Peak-hour factor, PHF	0.95	0.95	0.95	0.95	0.95	0.95	0.95	0.95	0.95	0.95	0.95	0.95
Adj. Flow (vph)	181	0	439	0	0	0	0	617	264	391	316	0
RTOR Reduction (vph)	0	351	0	0	0	0	0	0	178	0	0	0
Lane Group Flow (vph)	181	88	0	0	0	0	0	617	86	391	316	0
Confl. Peds. (#/hr)												
Turn Type	Perm								Perm	Prot		
Protected Phases		4						2		1	6	
Permitted Phases	4								2			
Actuated Green, G (s)	8.7	8.7						14.4	14.4	10.8	29.4	
Effective Green, g (s)	9.7	9.7						15.7	15.7	11.0	30.7	
Actuated g/C Ratio	0.20	0.20						0.32	0.32	0.23	0.63	
Clearance Time (s)	5.0	5.0						5.3	5.3	4.2	5.3	
Vehicle Extension (s)	3.0	3.0						3.0	3.0	3.0	3.0	
Lane Grp Cap (vph)	688	338						1301	513	780	1300	
v/s Ratio Prot		0.05						c0.15		c0.11	0.15	
v/s Ratio Perm	c0.05								0.05			
v/c Ratio	0.26	0.26						0.47	0.17	0.50	0.24	
Uniform Delay, d1	16.3	16.3						13.1	11.7	16.3	3.8	
Progression Factor	1.00	1.00						1.00	1.00	1.00	1.00	
Incremental Delay, d2	0.2	0.4						0.3	0.2	0.5	0.1	
Delay (s)	16.5	16.7						13.3	11.8	16.8	3.9	
Level of Service	B	B						B	B	B	A	
Approach Delay (s)		16.7			0.0			12.9			11.1	
Approach LOS		B			A			B			B	

Intersection Summary			
HCM Average Control Delay	13.4	HCM Level of Service	B
HCM Volume to Capacity ratio	0.43		
Actuated Cycle Length (s)	48.4	Sum of lost time (s)	12.0
Intersection Capacity Utilization	62.6%	ICU Level of Service	B
Analysis Period (min)	15		
c Critical Lane Group			

2017 PM Pk Hr — W/ Project Mitigated

8: Friars Rd WB Ramps & Qualcomm Wy — 1/28/2015

Movement	EBL	EBT	EBR	WBL	WBT	WBR	NBL	NBT	NBR	SBL	SBT	SBR
Lane Configurations												
Ideal Flow (vphpl)	1900	1900	1900	1900	1900	1900	1900	1900	1900	1900	1900	1900
Lane Width	12	12	12	12	16	12	12	11	12	12	16	16
Total Lost time (s)				4.0	4.0		4.0	4.0			4.0	4.0
Lane Util. Factor				0.95	0.95		0.97	0.95			0.91	1.00
Frpb, ped/bikes				1.00	1.00		1.00	1.00			1.00	1.00
Flpb, ped/bikes				1.00	1.00		1.00	1.00			1.00	1.00
Frt				1.00	0.91		1.00	1.00			1.00	0.85
Flt Protected				0.95	0.98		0.95	1.00			1.00	1.00
Satd. Flow (prot)				1681	1785		3433	3421			5763	1794
Flt Permitted				0.95	0.98		0.95	1.00			1.00	1.00
Satd. Flow (perm)				1681	1785		3433	3421			5763	1794
Volume (vph)	0	0	0	408	0	204	775	682	0	0	713	172
Peak-hour factor, PHF	0.95	0.95	0.95	0.95	0.95	0.95	0.95	0.95	0.95	0.95	0.95	0.95
Adj. Flow (vph)	0	0	0	429	0	215	816	718	0	0	751	181
RTOR Reduction (vph)	0	0	0	0	51	0	0	0	0	0	0	99
Lane Group Flow (vph)	0	0	0	298	295	0	816	718	0	0	751	82
Confl. Peds. (#/hr)												
Turn Type				Perm			Prot					Prot
Protected Phases					8		5	2			6	6
Permitted Phases				8								
Actuated Green, G (s)				24.7	24.7		58.5	85.3			22.1	22.1
Effective Green, g (s)				25.6	25.6		59.4	86.4			23.0	23.0
Actuated g/C Ratio				0.21	0.21		0.49	0.72			0.19	0.19
Clearance Time (s)				4.9	4.9		4.9	5.1			4.9	4.9
Vehicle Extension (s)				3.0	3.0		3.0	3.0			3.0	3.0
Lane Grp Cap (vph)				359	381		1699	2463			1105	344
v/s Ratio Prot							c0.24	0.21			c0.13	0.05
v/s Ratio Perm				c0.18	0.17							
v/c Ratio				0.83	0.77		0.48	0.29			0.68	0.24
Uniform Delay, d1				45.1	44.5		20.1	6.0			45.1	41.1
Progression Factor				1.00	1.00		1.00	1.00			1.00	1.00
Incremental Delay, d2				14.9	9.4		1.0	0.3			1.7	0.4
Delay (s)				60.0	53.9		21.0	6.3			46.8	41.5
Level of Service				E	D		C	A			D	D
Approach Delay (s)		0.0			56.8			14.1			45.7	
Approach LOS		A			E			B			D	

Intersection Summary			
HCM Average Control Delay	32.4	HCM Level of Service	C
HCM Volume to Capacity ratio	0.61		
Actuated Cycle Length (s)	120.0	Sum of lost time (s)	12.0
Intersection Capacity Utilization	88.2%	ICU Level of Service	E
Analysis Period (min)	15		
c Critical Lane Group			

2017 PM Pk Hr — W/ Project Mitigated

23: I-805 NB Ramps & Murray Ridge Rd — 1/28/2015

Movement	EBL	EBT	EBR	WBL	WBT	WBR	NBL	NBT	NBR	SBL	SBT	SBR
Lane Configurations												
Ideal Flow (vphpl)	1900	1900	1900	1900	1900	1900	1900	1900	1900	1900	1900	1900
Lane Width	12	12	12	16	12	16	12	16	12	12	16	11
Total Lost time (s)					4.0	4.0	4.0	4.0			4.0	
Lane Util. Factor					1.00	1.00	0.97	1.00			0.95	
Frpb, ped/bikes					1.00	1.00	1.00	1.00			1.00	
Flpb, ped/bikes					1.00	1.00	1.00	1.00			1.00	
Frt					1.00	0.85	1.00	1.00			0.94	
Flt Protected					0.95	1.00	0.95	1.00			1.00	
Satd. Flow (prot)					1770	1794	3433	2111			3767	
Flt Permitted					0.95	1.00	0.95	1.00			1.00	
Satd. Flow (perm)					1770	1794	3433	2111			3767	
Volume (vph)	0	0	0	360	0	427	753	404	0	0	572	390
Peak-hour factor, PHF	0.95	0.95	0.95	0.95	0.95	0.95	0.95	0.95	0.95	0.95	0.95	0.95
Adj. Flow (vph)	0	0	0	379	0	449	793	425	0	0	602	411
RTOR Reduction (vph)	0	0	0	0	0	328	0	0	0	0	126	0
Lane Group Flow (vph)	0	0	0	0	379	121	793	425	0	0	887	0
Confl. Peds. (#/hr)												
Turn Type				Perm		Perm	Prot					
Protected Phases					6		3	8			4	
Permitted Phases				6		6						
Actuated Green, G (s)					18.6	18.6	22.0	43.2			16.7	
Effective Green, g (s)					19.1	19.1	22.5	43.7			17.2	
Actuated g/C Ratio					0.27	0.27	0.32	0.62			0.24	
Clearance Time (s)					4.5	4.5	4.5	4.5			4.5	
Vehicle Extension (s)					3.0	3.0	3.0	3.0			3.0	
Lane Grp Cap (vph)					478	484	1091	1303			915	
v/s Ratio Prot							c0.23	0.20			c0.24	
v/s Ratio Perm					0.21	0.07						
v/c Ratio					0.79	0.25	0.73	0.33			0.97	
Uniform Delay, d1					24.0	20.2	21.4	6.5			26.5	
Progression Factor					1.00	1.00	1.00	1.00			1.00	
Incremental Delay, d2					8.8	0.3	2.4	0.1			22.3	
Delay (s)					32.8	20.5	23.9	6.6			48.9	
Level of Service					C	C	C	A			D	
Approach Delay (s)		0.0			26.1			17.9			48.9	
Approach LOS		A			C			B			D	

Intersection Summary			
HCM Average Control Delay	30.4	HCM Level of Service	C
HCM Volume to Capacity ratio	0.82		
Actuated Cycle Length (s)	70.8	Sum of lost time (s)	12.0
Intersection Capacity Utilization	93.4%	ICU Level of Service	F
Analysis Period (min)	15		
c Critical Lane Group			

2017 PM Pk Hr — W/ Project Mitigated

24: I-805 SB Ramps & Murray Ridge Rd — 1/28/2015

Movement	EBL	EBT	EBR	WBL	WBT	WBR	NBL	NBT	NBR	SBL	SBT	SBR
Lane Configurations												
Ideal Flow (vphpl)	1900	1900	1900	1900	1900	1900	1900	1900	1900	1900	1900	1900
Lane Width	12	14	12	12	12	12	12	16	12	12	15	12
Total Lost time (s)	4.0	4.0						4.0	4.0	4.0	4.0	
Lane Util. Factor	0.97	1.00						0.95	1.00	0.97	1.00	
Frpb, ped/bikes	1.00	1.00						1.00	1.00	1.00	1.00	
Flpb, ped/bikes	1.00	1.00						1.00	1.00	1.00	1.00	
Frt	1.00	0.85						1.00	0.85	1.00	1.00	
Flt Protected	0.95	1.00						1.00	1.00	0.95	1.00	
Satd. Flow (prot)	3433	1689						4011	1583	3433	2049	
Flt Permitted	0.95	1.00						1.00	1.00	0.95	1.00	
Satd. Flow (perm)	3433	1689						4011	1583	3433	2049	
Volume (vph)	304	0	756	0	0	0	0	738	320	567	437	0
Peak-hour factor, PHF	0.95	0.95	0.95	0.95	0.95	0.95	0.95	0.95	0.95	0.95	0.95	0.95
Adj. Flow (vph)	320	0	796	0	0	0	0	777	337	597	460	0
RTOR Reduction (vph)	0	391	0	0	0	0	0	0	230	0	0	0
Lane Group Flow (vph)	320	405	0	0	0	0	0	777	107	597	460	0
Confl. Peds. (#/hr)												
Turn Type	Perm								Perm	Prot		
Protected Phases		4						2		1	6	
Permitted Phases	4								2			
Actuated Green, G (s)	17.5	17.5						21.3	21.3	18.1	43.6	
Effective Green, g (s)	18.5	18.5						22.6	22.6	18.3	44.9	
Actuated g/C Ratio	0.26	0.26						0.32	0.32	0.26	0.63	
Clearance Time (s)	5.0	5.0						5.3	5.3	4.2	5.3	
Vehicle Extension (s)	3.0	3.0						3.0	3.0	3.0	3.0	
Lane Grp Cap (vph)	890	438						1270	501	880	1289	
v/s Ratio Prot		c0.24						c0.19		c0.17	0.22	
v/s Ratio Perm	0.09								0.07			
v/c Ratio	0.36	0.92						0.61	0.21	0.68	0.36	
Uniform Delay, d1	21.6	25.8						20.7	17.9	23.9	6.3	
Progression Factor	1.00	1.00						1.00	1.00	1.00	1.00	
Incremental Delay, d2	0.2	25.2						0.9	0.2	2.1	0.2	
Delay (s)	21.9	50.9						21.6	18.1	26.0	6.5	
Level of Service	C	D						C	B	C	A	
Approach Delay (s)		42.6			0.0			20.5			17.5	
Approach LOS		D			A			C			B	

Intersection Summary			
HCM Average Control Delay	27.0	HCM Level of Service	C
HCM Volume to Capacity ratio	0.73		
Actuated Cycle Length (s)	71.4	Sum of lost time (s)	12.0
Intersection Capacity Utilization	93.4%	ICU Level of Service	F
Analysis Period (min)	15		
c Critical Lane Group			

APPENDIX I

PEAK HOUR INTERSECTION AND ARTERIAL ANALYSIS WORKSHEETS
LONG TERM (2035) WITHOUT CONNECTION CONDITIONS

2035 W/O Project AM
4: Friars Rd EB Ramps & Mission Center Rd 1/15/2015

Movement	EBL	EBT	EBR	WBL	WBT	WBR	NBL	NBT	NBR	SBL	SBT	SBR
Lane Configurations												
Ideal Flow (vphpl)	1900	1900	1900	1900	1900	1900	1900	1900	1900	1900	1900	1900
Lane Width	14	12	13	12	12	12	12	13	12	15	16	12
Total Lost time (s)	4.0	4.0	4.0					4.0		4.0	4.0	
Lane Util. Factor	0.95	0.95	1.00					0.95		0.97	0.95	
Frpb, ped/bikes	1.00	1.00	1.00					1.00		1.00	1.00	
Flpb, ped/bikes	1.00	1.00	1.00					1.00		1.00	1.00	
Frt	1.00	1.00	0.85					0.97		1.00	1.00	
Flt Protected	0.95	0.95	1.00					1.00		0.95	1.00	
Satd. Flow (prot)	1793	1681	1636					3543		3776	4011	
Flt Permitted	0.95	0.95	1.00					1.00		0.95	1.00	
Satd. Flow (perm)	1793	1681	1636					3543		3776	4011	
Volume (vph)	325	0	175	0	0	0	0	630	165	385	625	0
Peak-hour factor, PHF	0.95	0.95	0.95	0.95	0.95	0.95	0.95	0.95	0.95	0.95	0.95	0.95
Adj. Flow (vph)	342	0	184	0	0	0	0	663	174	405	658	0
RTOR Reduction (vph)	0	0	150	0	0	0	0	26	0	0	0	0
Lane Group Flow (vph)	172	170	34	0	0	0	0	811	0	405	658	0
Confl. Peds. (#/hr)												
Turn Type	Split		Perm							Prot		
Protected Phases	4	4						2		1	6	
Permitted Phases			4									
Actuated Green, G (s)	9.3	9.3	9.3					19.8		11.9	35.5	
Effective Green, g (s)	10.2	10.2	10.2					20.8		12.3	37.1	
Actuated g/C Ratio	0.18	0.18	0.18					0.38		0.22	0.67	
Clearance Time (s)	4.9	4.9	4.9					5.0		4.4	5.6	
Vehicle Extension (s)	3.0	3.0	3.0					3.0		3.0	3.0	
Lane Grp Cap (vph)	331	310	302					1333		840	2691	
v/s Ratio Prot	0.10	c0.10						c0.23		c0.11	0.16	
v/s Ratio Perm			0.02									
v/c Ratio	0.52	0.55	0.11					0.61		0.48	0.24	
Uniform Delay, d1	20.3	20.5	18.8					14.0		18.7	3.6	
Progression Factor	1.00	1.00	1.00					1.00		1.00	1.00	
Incremental Delay, d2	1.4	2.0	0.2					0.8		0.4	0.0	
Delay (s)	21.7	22.4	18.9					14.7		19.2	3.6	
Level of Service	C	C	B					B		B	A	
Approach Delay (s)		21.0			0.0			14.7			9.5	
Approach LOS		C			A			B			A	

Intersection Summary				
HCM Average Control Delay	13.8	HCM Level of Service	B	
HCM Volume to Capacity ratio	0.56			
Actuated Cycle Length (s)	55.3	Sum of lost time (s)	12.0	
Intersection Capacity Utilization	52.7%	ICU Level of Service	A	
Analysis Period (min)	15			
c Critical Lane Group				

2035 W/O Project AM
5: Friars Rd WB Ramps & Mission Center Rd 1/15/2015

Movement	EBL	EBT	EBR	WBL	WBT	WBR	NBL	NBT	NBR	SBL	SBT	SBR
Lane Configurations												
Ideal Flow (vphpl)	1900	1900	1900	1900	1900	1900	1900	1900	1900	1900	1900	1900
Lane Width	12	12	12	15	12	15	10	12	12	12	14	11
Total Lost time (s)				4.0	4.0	4.0	4.0	4.0			4.0	4.0
Lane Util. Factor				0.95	0.95	1.00	0.97	0.95			0.95	1.00
Frpb, ped/bikes				1.00	1.00	1.00	1.00	1.00			1.00	1.00
Flpb, ped/bikes				1.00	1.00	1.00	1.00	1.00			1.00	1.00
Frt				1.00	1.00	0.85	1.00	1.00			1.00	0.85
Flt Protected				0.95	0.95	1.00	0.95	1.00			1.00	1.00
Satd. Flow (prot)				1849	1681	1742	3204	3539			3775	1531
Flt Permitted				0.95	0.95	1.00	0.95	1.00			1.00	1.00
Satd. Flow (perm)				1849	1681	1742	3204	3539			3775	1531
Volume (vph)	0	0	0	260	0	345	155	800	0	0	750	390
Peak-hour factor, PHF	0.95	0.95	0.95	0.95	0.95	0.95	0.95	0.95	0.95	0.95	0.95	0.95
Adj. Flow (vph)	0	0	0	274	0	363	163	842	0	0	789	411
RTOR Reduction (vph)	0	0	0	0	0	99	0	0	0	0	0	230
Lane Group Flow (vph)	0	0	0	140	134	264	163	842	0	0	789	181
Confl. Peds. (#/hr)												
Turn Type				Split		Perm	Prot					Perm
Protected Phases				8	8		5	2			6	
Permitted Phases						8						6
Actuated Green, G (s)				14.4	14.4	14.4	6.6	31.5			19.5	19.5
Effective Green, g (s)				15.3	15.3	15.3	7.0	32.5			21.5	21.5
Actuated g/C Ratio				0.27	0.27	0.27	0.13	0.58			0.39	0.39
Clearance Time (s)				4.9	4.9	4.9	4.4	5.0			6.0	6.0
Vehicle Extension (s)				3.0	3.0	3.0	3.0	3.0			3.0	3.0
Lane Grp Cap (vph)				507	461	478	402	2061			1455	590
v/s Ratio Prot				0.08	0.08		0.05	c0.24			c0.21	
v/s Ratio Perm						c0.15						0.12
v/c Ratio				0.28	0.29	0.55	0.41	0.41			0.54	0.31
Uniform Delay, d1				15.9	16.0	17.3	22.5	6.4			13.3	12.0
Progression Factor				1.00	1.00	1.00	1.00	1.00			1.00	1.00
Incremental Delay, d2				0.3	0.4	1.4	0.7	0.1			0.4	0.3
Delay (s)				16.2	16.3	18.7	23.2	6.5			13.7	12.3
Level of Service				B	B	B	C	A			B	B
Approach Delay (s)		0.0			17.6			9.2			13.2	
Approach LOS		A			B			A			B	

Intersection Summary				
HCM Average Control Delay	12.8	HCM Level of Service	B	
HCM Volume to Capacity ratio	0.54			
Actuated Cycle Length (s)	55.8	Sum of lost time (s)	12.0	
Intersection Capacity Utilization	52.7%	ICU Level of Service	A	
Analysis Period (min)	15			
c Critical Lane Group				

2035 W/O Project AM
7: Friars Rd EB Ramps & Qualcomm Wy 1/15/2015

Movement	EBL	EBT	EBR	WBL	WBT	WBR	NBL	NBT	NBR	SBL	SBT	SBR
Lane Configurations												
Ideal Flow (vphpl)	1900	1900	1900	1900	1900	1900	1900	1900	1900	1900	1900	1900
Lane Width	12	11	14	12	12	12	12	12	15	12	12	12
Total Lost time (s)		4.0	4.0					4.0	4.0	4.0	4.0	
Lane Util. Factor		1.00	1.00					0.95	1.00	1.00	0.95	
Frpb, ped/bikes		1.00	1.00					1.00	1.00	1.00	1.00	
Flpb, ped/bikes		1.00	1.00					1.00	1.00	1.00	1.00	
Frt		1.00	0.85					1.00	0.85	1.00	1.00	
Flt Protected		0.95	1.00					1.00	1.00	0.95	1.00	
Satd. Flow (prot)		1711	1689					3539	1742	1770	3539	
Flt Permitted		0.95	1.00					1.00	1.00	0.95	1.00	
Satd. Flow (perm)		1711	1689					3539	1742	1770	3539	
Volume (vph)	470	0	175	0	0	0	0	625	235	165	530	0
Peak-hour factor, PHF	0.95	0.95	0.95	0.95	0.95	0.95	0.95	0.95	0.95	0.95	0.95	0.95
Adj. Flow (vph)	495	0	184	0	0	0	0	658	247	174	558	0
RTOR Reduction (vph)	0	0	122	0	0	0	0	0	153	0	0	0
Lane Group Flow (vph)	0	495	62	0	0	0	0	658	94	174	558	0
Confl. Peds. (#/hr)												
Turn Type	Split		Perm						Perm	Prot		
Protected Phases	4	4						2		1	6	
Permitted Phases			4						2			
Actuated Green, G (s)		29.5	29.5					33.2	33.2	12.9	50.7	
Effective Green, g (s)		30.4	30.4					34.3	34.3	13.3	51.6	
Actuated g/C Ratio		0.34	0.34					0.38	0.38	0.15	0.57	
Clearance Time (s)		4.9	4.9					5.1	5.1	4.4	4.9	
Vehicle Extension (s)		3.0	3.0					3.0	3.0	3.0	3.0	
Lane Grp Cap (vph)		578	571					1349	664	262	2029	
v/s Ratio Prot		c0.29						c0.19		c0.10	0.16	
v/s Ratio Perm			0.04						0.05			
v/c Ratio		0.86	0.11					0.49	0.14	0.66	0.28	
Uniform Delay, d1		27.8	20.5					21.2	18.2	36.2	9.7	
Progression Factor		1.00	1.00					1.00	1.00	0.64	1.73	
Incremental Delay, d2		11.9	0.1					1.3	0.4	3.9	0.2	
Delay (s)		39.7	20.6					22.4	18.7	27.1	17.0	
Level of Service		D	C					C	B	C	B	
Approach Delay (s)		34.5			0.0			21.4			19.4	
Approach LOS		C			A			C			B	

Intersection Summary				
HCM Average Control Delay	24.6	HCM Level of Service	C	
HCM Volume to Capacity ratio	0.66			
Actuated Cycle Length (s)	90.0	Sum of lost time (s)	12.0	
Intersection Capacity Utilization	87.2%	ICU Level of Service	E	
Analysis Period (min)	15			
c Critical Lane Group				

2035 W/O Project AM
8: Friars Rd WB Ramps & Qualcomm Wy 1/15/2015

Movement	EBL	EBT	EBR	WBL	WBT	WBR	NBL	NBT	NBR	SBL	SBT	SBR
Lane Configurations												
Ideal Flow (vphpl)	1900	1900	1900	1900	1900	1900	1900	1900	1900	1900	1900	1900
Lane Width	12	12	12	12	16	12	12	11	12	12	16	16
Total Lost time (s)				4.0	4.0		4.0	4.0			4.0	
Lane Util. Factor				0.95	0.95		1.00	1.00			0.95	
Frpb, ped/bikes				1.00	1.00		1.00	1.00			1.00	
Flpb, ped/bikes				1.00	1.00		1.00	1.00			1.00	
Frt				1.00	0.87		1.00	1.00			0.93	
Flt Protected				0.95	0.99		0.95	1.00			1.00	
Satd. Flow (prot)				1681	1729		1770	1801			3740	
Flt Permitted				0.95	0.99		0.95	1.00			1.00	
Satd. Flow (perm)				1681	1729		1770	1801			3740	
Volume (vph)	0	0	0	300	0	240	475	620	0	0	395	325
Peak-hour factor, PHF	0.95	0.95	0.95	0.95	0.95	0.95	0.95	0.95	0.95	0.95	0.95	0.95
Adj. Flow (vph)	0	0	0	316	0	253	500	653	0	0	416	342
RTOR Reduction (vph)	0	0	0	0	194	0	0	0	0	0	165	0
Lane Group Flow (vph)	0	0	0	283	92	0	500	653	0	0	593	0
Confl. Peds. (#/hr)												
Turn Type				Split			Prot					
Protected Phases				8	8		5	2			6	
Permitted Phases												
Actuated Green, G (s)				20.0	20.0		37.9	60.0			17.4	
Effective Green, g (s)				20.9	20.9		38.8	61.1			18.3	
Actuated g/C Ratio				0.23	0.23		0.43	0.68			0.20	
Clearance Time (s)				4.9	4.9		4.9	5.1			4.9	
Vehicle Extension (s)				3.0	3.0		3.0	3.0			3.0	
Lane Grp Cap (vph)				390	402		763	1223			760	
v/s Ratio Prot				c0.17	0.05		c0.28	0.36			c0.16	
v/s Ratio Perm												
v/c Ratio				0.73	0.23		0.66	0.53			0.78	
Uniform Delay, d1				31.9	28.0		20.3	7.3			33.9	
Progression Factor				1.00	1.00		0.81	0.68			1.12	
Incremental Delay, d2				6.6	0.3		3.3	1.3			5.1	
Delay (s)				38.5	28.3		19.7	6.2			43.3	
Level of Service				D	C		B	A			D	
Approach Delay (s)		0.0			33.4			12.0			43.3	
Approach LOS		A			C			B			D	

Intersection Summary				
HCM Average Control Delay	26.5	HCM Level of Service	C	
HCM Volume to Capacity ratio	0.70			
Actuated Cycle Length (s)	90.0	Sum of lost time (s)	12.0	
Intersection Capacity Utilization	87.2%	ICU Level of Service	E	
Analysis Period (min)	15			
c Critical Lane Group				

Movement	EBT	EBR	WBL	WBT	NBL	NBR
Lane Configurations						
Ideal Flow (vphpl)	1900	1900	1900	1900	1900	1900
Total Lost time (s)	4.0	4.0	4.0	4.0	4.0	
Lane Util. Factor	0.95	1.00	0.97	1.00	0.97	
Frt	1.00	0.85	1.00	1.00	0.92	
Flt Protected	1.00	1.00	0.95	1.00	0.98	
Satd. Flow (prot)	3539	1583	3433	1863	3252	
Flt Permitted	1.00	1.00	0.63	1.00	0.98	
Satd. Flow (perm)	3539	1583	2287	1863	3252	
Volume (vph)	180	305	295	165	235	260
Peak-hour factor, PHF	0.95	0.95	0.95	0.95	0.95	0.95
Adj. Flow (vph)	189	321	311	174	247	274
RTOR Reduction (vph)	0	162	0	0	160	0
Lane Group Flow (vph)	189	159	311	174	361	0
Turn Type		Perm	Perm			
Protected Phases	4			8	2	
Permitted Phases		4	8			
Actuated Green, G (s)	44.0	44.0	44.0	44.0	37.0	
Effective Green, g (s)	44.5	44.5	44.5	44.5	37.5	
Actuated g/C Ratio	0.49	0.49	0.49	0.49	0.42	
Clearance Time (s)	4.5	4.5	4.5	4.5	4.5	
Lane Grp Cap (vph)	1750	783	1131	921	1355	
v/s Ratio Prot	0.05			0.09	c0.11	
v/s Ratio Perm		0.10	c0.14			
v/c Ratio	0.11	0.20	0.27	0.19	0.27	
Uniform Delay, d1	12.2	12.8	13.3	12.7	17.2	
Progression Factor	1.04	2.88	1.00	1.00	0.87	
Incremental Delay, d2	0.1	0.6	0.6	0.5	0.4	
Delay (s)	12.7	37.4	13.9	13.1	15.3	
Level of Service	B	D	B	B	B	
Approach Delay (s)	28.3			13.6	15.3	
Approach LOS	C			B	B	

Intersection Summary			
HCM Average Control Delay	19.1	HCM Level of Service	B
HCM Volume to Capacity ratio	0.27		
Actuated Cycle Length (s)	90.0	Sum of lost time (s)	8.0
Intersection Capacity Utilization	38.3%	ICU Level of Service	A
Analysis Period (min)	15		

c Critical Lane Group

Movement	EBL	EBT	EBR	WBL	WBT	WBR	NBL	NBT	NBR	SBL	SBT	SBR
Lane Configurations												
Ideal Flow (vphpl)	1900	1900	1900	1900	1900	1900	1900	1900	1900	1900	1900	1900
Lane Width	14	12	12	10	12	12	12	11	13	12	15	10
Total Lost time (s)	4.0	4.0		4.0	4.0			4.0	4.0		4.0	
Lane Util. Factor	1.00	0.91		1.00	0.91			1.00	1.00		1.00	
Frt	1.00	1.00		1.00	0.98			1.00	0.85		0.96	
Flt Protected	0.95	1.00		0.95	1.00			0.97	1.00		0.98	
Satd. Flow (prot)	1888	5074		1652	4982			1741	1636		1925	
Flt Permitted	0.95	1.00		0.95	1.00			0.78	1.00		0.85	
Satd. Flow (perm)	1888	5074		1652	4982			1410	1636		1675	
Volume (vph)	95	685	10	165	1340	210	65	30	50	10	5	6
Peak-hour factor, PHF	0.95	0.95	0.95	0.95	0.95	0.95	0.95	0.95	0.95	0.95	0.95	0.95
Adj. Flow (vph)	100	721	11	174	1411	221	68	32	53	11	5	6
RTOR Reduction (vph)	0	1	0	0	15	0	0	0	44	0	5	0
Lane Group Flow (vph)	100	731	0	174	1617	0	0	100	9	0	17	0
Turn Type	Prot			Prot			Perm		Perm	Perm		
Protected Phases	5	2		1	6			8			4	
Permitted Phases							8		8	4		
Actuated Green, G (s)	6.9	27.6		9.7	30.4			9.2	9.2		9.2	
Effective Green, g (s)	7.3	29.8		10.1	32.6			10.1	10.1		10.1	
Actuated g/C Ratio	0.12	0.48		0.16	0.53			0.16	0.16		0.16	
Clearance Time (s)	4.4	6.2		4.4	6.2			4.9	4.9		4.9	
Vehicle Extension (s)	3.0	3.0		3.0	3.0			3.0	3.0		3.0	
Lane Grp Cap (vph)	222	2439		269	2620			230	267		273	
v/s Ratio Prot	0.05	0.14		c0.11	c0.32							
v/s Ratio Perm								c0.07	0.01		0.01	
v/c Ratio	0.45	0.30		0.65	0.62			0.43	0.03		0.06	
Uniform Delay, d1	25.5	9.8		24.3	10.3			23.4	21.8		21.9	
Progression Factor	1.00	1.00		1.00	1.00			1.00	1.00		1.00	
Incremental Delay, d2	1.5	0.1		5.3	0.4			1.3	0.0		0.1	
Delay (s)	26.9	9.8		29.5	10.8			24.7	21.9		22.0	
Level of Service	C	A		C	B			C	C		C	
Approach Delay (s)		11.9			12.6			23.7			22.0	
Approach LOS		B			B			C			C	

Intersection Summary			
HCM Average Control Delay	13.0	HCM Level of Service	B
HCM Volume to Capacity ratio	0.60		
Actuated Cycle Length (s)	62.0	Sum of lost time (s)	12.0
Intersection Capacity Utilization	53.7%	ICU Level of Service	A
Analysis Period (min)	15		

c Critical Lane Group

Movement	EBL	EBT	EBR	WBL	WBT	WBR	NBL	NBT	NBR	SBL	SBT	SBR
Lane Configurations												
Ideal Flow (vphpl)	1900	1900	1900	1900	1900	1900	1900	1900	1900	1900	1900	1900
Lane Width	12	12	14	10	12	12	9	12	16	12	12	12
Total Lost time (s)	4.0	4.0	4.0	4.0	4.0	4.0	4.0	4.0	4.0	4.0	4.0	4.0
Lane Util. Factor	1.00	0.91	1.00	0.97	0.91	1.00	0.97	1.00	1.00	0.97	0.95	0.95
Frpb, ped/bikes	1.00	1.00	1.00	1.00	1.00	1.00	1.00	1.00	1.00	1.00	1.00	1.00
Flpb, ped/bikes	1.00	1.00	1.00	1.00	1.00	1.00	1.00	1.00	1.00	1.00	1.00	1.00
Frt	1.00	1.00	0.85	1.00	1.00	0.85	1.00	1.00	0.85	1.00	0.89	0.85
Flt Protected	0.95	1.00	1.00	0.95	1.00	1.00	0.95	1.00	1.00	0.95	1.00	1.00
Satd. Flow (prot)	1770	5085	1689	3204	5085	1583	3090	1863	1794	3433	1583	1504
Flt Permitted	0.95	1.00	1.00	0.95	1.00	1.00	0.95	1.00	1.00	0.95	1.00	1.00
Satd. Flow (perm)	1770	5085	1689	3204	5085	1583	3090	1863	1794	3433	1583	1504
Volume (vph)	25	660	15	215	1530	25	65	5	105	95	25	145
Peak-hour factor, PHF	0.95	0.95	0.95	0.95	0.95	0.95	0.95	0.95	0.95	0.95	0.95	0.95
Adj. Flow (vph)	26	695	16	226	1611	26	68	5	111	100	26	153
RTOR Reduction (vph)	0	0	6	0	0	8	0	0	97	0	53	14
Lane Group Flow (vph)	26	695	10	226	1611	18	68	5	14	100	35	77
Confl. Peds. (#/hr)												
Turn Type	Prot		pm+ov	Prot		pm+ov	Prot		Perm	Prot		pm+ov
Protected Phases	5	2	3	1	6	7	3	8		7	4	5
Permitted Phases			2			6			8			4
Actuated Green, G (s)	6.3	62.4	66.1	12.3	68.4	75.1	3.7	13.7	13.7	6.7	16.7	23.0
Effective Green, g (s)	6.7	64.6	68.7	12.7	70.6	77.7	4.1	14.6	14.6	7.1	17.6	24.3
Actuated g/C Ratio	0.06	0.56	0.60	0.11	0.61	0.68	0.04	0.13	0.13	0.06	0.15	0.21
Clearance Time (s)	4.4	6.2	4.4	4.4	6.2	4.4	4.4	4.9	4.9	4.4	4.9	4.4
Vehicle Extension (s)	3.0	3.0	3.0	3.0	3.0	3.0	3.0	3.0	3.0	3.0	3.0	3.0
Lane Grp Cap (vph)	103	2856	1068	354	3122	1125	110	237	228	212	242	370
v/s Ratio Prot	0.01	0.14	0.00	c0.07	c0.32	0.00	0.02	0.00		c0.03	0.02	c0.01
v/s Ratio Perm			0.01			0.01			0.01			0.04
v/c Ratio	0.25	0.24	0.01	0.64	0.52	0.02	0.62	0.02	0.06	0.47	0.15	0.21
Uniform Delay, d1	51.8	12.8	9.4	49.0	12.5	6.1	54.7	43.9	44.2	52.1	42.2	37.4
Progression Factor	1.00	1.00	1.00	1.00	1.00	1.00	1.00	1.00	1.00	1.00	1.00	1.00
Incremental Delay, d2	1.3	0.2	0.0	3.8	0.6	0.0	9.9	0.0	0.1	1.7	0.3	0.3
Delay (s)	53.0	13.0	9.4	52.7	13.2	6.1	64.6	44.0	44.3	53.8	42.5	37.7
Level of Service	D	B	A	D	B	A	E	D	D	D	D	D
Approach Delay (s)		14.3			17.9			51.8			45.0	
Approach LOS		B			B			D			D	

Intersection Summary			
HCM Average Control Delay	21.5	HCM Level of Service	C
HCM Volume to Capacity ratio	0.48		
Actuated Cycle Length (s)	115.0	Sum of lost time (s)	12.0
Intersection Capacity Utilization	52.3%	ICU Level of Service	A
Analysis Period (min)	15		

c Critical Lane Group

Movement	EBL	EBT	EBR	WBL	WBT	WBR	NBL	NBT	NBR	SBL	SBT	SBR
Lane Configurations												
Ideal Flow (vphpl)	1900	1900	1900	1900	1900	1900	1900	1900	1900	1900	1900	1900
Lane Width	10	12	16	10	13	12	11	16	12	11	15	12
Total Lost time (s)	4.0	4.0	4.0	4.0	4.0	4.0	4.0	4.0	4.0	4.0	4.0	4.0
Lane Util. Factor	0.97	0.91	1.00	0.97	0.91	1.00	0.97	1.00	1.00	0.97	1.00	1.00
Frpb, ped/bikes	1.00	1.00	1.00	1.00	1.00	1.00	1.00	1.00	1.00	1.00	1.00	1.00
Flpb, ped/bikes	1.00	1.00	1.00	1.00	1.00	1.00	1.00	1.00	1.00	1.00	1.00	1.00
Frt	1.00	1.00	0.85	1.00	1.00	0.85	1.00	1.00	0.85	1.00	1.00	0.85
Flt Protected	0.95	1.00	1.00	0.95	1.00	1.00	0.95	1.00	1.00	0.95	1.00	1.00
Satd. Flow (prot)	3204	5085	1794	3204	5255	1583	3319	2111	1583	3319	2049	1583
Flt Permitted	0.95	1.00	1.00	0.95	1.00	1.00	0.95	1.00	1.00	0.95	1.00	1.00
Satd. Flow (perm)	3204	5085	1794	3204	5255	1583	3319	2111	1583	3319	2049	1583
Volume (vph)	40	580	235	485	1530	45	80	5	175	155	30	110
Peak-hour factor, PHF	0.95	0.95	0.95	0.95	0.95	0.95	0.95	0.95	0.95	0.95	0.95	0.95
Adj. Flow (vph)	42	611	247	511	1611	47	84	5	184	163	32	116
RTOR Reduction (vph)	0	0	167	0	0	16	0	0	35	0	0	97
Lane Group Flow (vph)	42	611	80	511	1611	31	84	5	149	163	32	19
Confl. Peds. (#/hr)												
Turn Type	Prot		Perm	Prot		pm+ov	Prot		pm+ov	Prot		Perm
Protected Phases	5	2		1	6	7	3	8	1	7	4	
Permitted Phases			2			6			8			4
Actuated Green, G (s)	3.3	21.0	21.0	16.6	34.1	43.5	3.1	4.2	20.8	9.4	10.5	10.5
Effective Green, g (s)	3.7	23.0	23.0	17.0	36.3	46.1	3.5	5.1	22.1	9.8	11.4	11.4
Actuated g/C Ratio	0.05	0.32	0.32	0.24	0.51	0.65	0.05	0.07	0.31	0.14	0.16	0.16
Clearance Time (s)	4.4	6.0	6.0	4.4	6.2	4.4	4.4	4.9	4.4	4.4	4.9	4.9
Vehicle Extension (s)	3.0	3.0	3.0	3.0	3.0	3.0	3.0	3.0	3.0	3.0	3.0	3.0
Lane Grp Cap (vph)	167	1650	582	768	2691	1119	164	152	583	459	329	255
v/s Ratio Prot	0.01	0.12		c0.16	c0.31	0.00	c0.03	0.00	c0.06	c0.05	0.02	
v/s Ratio Perm			0.04			0.02			0.03			0.01
v/c Ratio	0.25	0.37	0.14	0.67	0.60	0.03	0.51	0.03	0.26	0.36	0.10	0.07
Uniform Delay, d1	32.3	18.4	16.9	24.4	12.2	4.4	32.9	30.6	18.2	27.7	25.4	25.3
Progression Factor	1.00	1.00	1.00	1.00	1.00	1.00	1.00	1.00	1.00	1.00	1.00	1.00
Incremental Delay, d2	0.8	0.1	0.1	2.2	0.4	0.0	2.7	0.1	0.2	0.5	0.1	0.1
Delay (s)	33.1	18.5	17.0	26.6	12.5	4.4	35.6	30.7	18.5	28.2	25.5	25.4
Level of Service	C	B	B	C	B	A	D	C	B	C	C	C
Approach Delay (s)		18.8			15.7			24.0			26.9	
Approach LOS		B			B			C			C	

Intersection Summary			
HCM Average Control Delay	18.0	HCM Level of Service	B
HCM Volume to Capacity ratio	0.54		
Actuated Cycle Length (s)	70.9	Sum of lost time (s)	12.0
Intersection Capacity Utilization	54.0%	ICU Level of Service	A
Analysis Period (min)	15		

c Critical Lane Group

Movement	EBL	EBT	EBR	WBL	WBT	WBR	NBL	NBT	NBR	SBL	SBT	SBR
Lane Configurations												
Ideal Flow (vphpl)	1900	1900	1900	1900	1900	1900	1900	1900	1900	1900	1900	1900
Lane Width	12	10	12	12	16	12	12	16	12	12	16	12
Total Lost time (s)		4.0	4.0		4.0		4.0	4.0		4.0	4.0	4.0
Lane Util. Factor		1.00	1.00		1.00		1.00	1.00		1.00	1.00	1.00
Frpb, ped/bikes		1.00	1.00		1.00		1.00	1.00		1.00	1.00	1.00
Flpb, ped/bikes		1.00	1.00		1.00		1.00	1.00		1.00	1.00	1.00
Frt		1.00	0.85		0.99		1.00	0.98		1.00	1.00	0.85
Flt Protected		0.96	1.00		0.96		0.95	1.00		0.95	1.00	1.00
Satd. Flow (prot)		1676	1583		2019		1770	2075		1770	2111	1583
Flt Permitted		0.96	1.00		0.96		0.95	1.00		0.95	1.00	1.00
Satd. Flow (perm)		1676	1583		2019		1770	2075		1770	2111	1583
Volume (vph)	120	40	340	140	35	10	605	390	50	5	460	145
Peak-hour factor, PHF	0.95	0.95	0.95	0.95	0.95	0.95	0.95	0.95	0.95	0.95	0.95	0.95
Adj. Flow (vph)	126	42	358	147	37	11	637	411	53	5	484	153
RTOR Reduction (vph)	0	0	307	0	2	0	0	3	0	0	0	30
Lane Group Flow (vph)	0	168	51	0	193	0	637	461	0	5	484	123
Confl. Peds. (#/hr)												
Turn Type	Split		Perm	Split			Prot			Prot		Perm
Protected Phases	4	4		3	3		5	2		1	6	
Permitted Phases			4									6
Actuated Green, G (s)		18.2	18.2		16.8		48.8	82.7		0.8	34.7	34.7
Effective Green, g (s)		19.5	19.5		17.7		49.2	83.6		1.2	35.6	35.6
Actuated g/C Ratio		0.14	0.14		0.13		0.36	0.61		0.01	0.26	0.26
Clearance Time (s)		5.3	5.3		4.9		4.4	4.9		4.4	4.9	4.9
Vehicle Extension (s)		3.5	3.5		2.0		2.0	3.9		2.0	3.9	3.9
Lane Grp Cap (vph)		237	224		259		631	1257		15	545	408
v/s Ratio Prot		c0.10			c0.10		c0.36	0.22		0.00	c0.23	
v/s Ratio Perm			0.03									0.08
v/c Ratio		0.71	0.23		0.75		1.01	0.37		0.33	0.89	0.30
Uniform Delay, d1		56.5	52.6		58.0		44.4	13.8		68.0	49.3	41.2
Progression Factor		1.00	1.00		1.00		1.00	1.00		1.00	1.00	1.00
Incremental Delay, d2		9.6	0.6		9.8		38.2	0.2		4.7	16.4	0.6
Delay (s)		66.2	53.2		67.8		82.6	14.0		72.7	65.7	41.8
Level of Service		E	D		E		F	B		E	E	D
Approach Delay (s)		57.3			67.8			53.7			60.1	
Approach LOS		E			E			D			E	

Intersection Summary			
HCM Average Control Delay	57.2	HCM Level of Service	E
HCM Volume to Capacity ratio	0.89		
Actuated Cycle Length (s)	138.0	Sum of lost time (s)	16.0
Intersection Capacity Utilization	84.6%	ICU Level of Service	E
Analysis Period (min)	15		
c Critical Lane Group			

Movement	EBL	EBT	EBR	WBL	WBT	WBR	NBL	NBT	NBR	SBL	SBT	SBR
Lane Configurations												
Ideal Flow (vphpl)	1900	1900	1900	1900	1900	1900	1900	1900	1900	1900	1900	1900
Lane Width	12	12	16	12	12	12	10	12	12	12	12	12
Total Lost time (s)	4.0	4.0	4.0	4.0	4.0		4.0	4.0	4.0	4.0	4.0	
Lane Util. Factor	1.00	1.00	1.00	0.97	1.00		0.97	0.95	1.00	1.00	0.95	
Frpb, ped/bikes	1.00	1.00	1.00	1.00	1.00		1.00	1.00	1.00	1.00	1.00	
Flpb, ped/bikes	1.00	1.00	1.00	1.00	1.00		1.00	1.00	1.00	1.00	1.00	
Frt	1.00	1.00	0.85	1.00	0.85		1.00	1.00	0.85	1.00	0.93	
Flt Protected	0.95	1.00	1.00	0.95	1.00		0.95	1.00	1.00	0.95	1.00	
Satd. Flow (prot)	1770	1863	1794	3433	1588		3204	3539	1583	1770	3278	
Flt Permitted	0.95	1.00	1.00	0.95	1.00		0.95	1.00	1.00	0.95	1.00	
Satd. Flow (perm)	1770	1863	1794	3433	1588		3204	3539	1583	1770	3278	
Volume (vph)	50	10	85	455	5	260	390	310	325	320	315	305
Peak-hour factor, PHF	0.95	0.95	0.95	0.95	0.95	0.95	0.95	0.95	0.95	0.95	0.95	0.95
Adj. Flow (vph)	53	11	89	479	5	274	411	326	342	337	332	321
RTOR Reduction (vph)	0	0	80	0	208	0	0	0	275	0	177	0
Lane Group Flow (vph)	53	11	9	479	71	0	411	326	67	337	476	0
Confl. Peds. (#/hr)												
Turn Type	Prot		Perm	Prot			Prot		Perm	Prot		
Protected Phases	7	4		3	8		5	2		1	6	
Permitted Phases		4	4		8			2	2		6	
Actuated Green, G (s)	4.8	6.8	6.8	14.9	16.9		17.5	13.5	13.5	20.0	16.0	
Effective Green, g (s)	5.2	7.7	7.7	15.3	17.8		17.9	14.5	14.5	20.4	17.0	
Actuated g/C Ratio	0.07	0.10	0.10	0.21	0.24		0.24	0.20	0.20	0.28	0.23	
Clearance Time (s)	4.4	4.9	4.9	4.4	4.9		4.4	5.0	5.0	4.4	5.0	
Vehicle Extension (s)	3.0	3.0	3.0	3.0	3.0		3.0	3.0	3.0	3.0	3.0	
Lane Grp Cap (vph)	125	194	187	711	382		776	694	311	489	754	
v/s Ratio Prot	0.03	0.01		c0.14	c0.04		0.13	0.09		c0.19	c0.15	
v/s Ratio Perm			0.01						0.04			
v/c Ratio	0.42	0.06	0.05	0.67	0.19		0.53	0.47	0.22	0.69	0.63	
Uniform Delay, d1	32.9	29.8	29.8	27.0	22.3		24.3	26.3	24.9	23.9	25.6	
Progression Factor	1.00	1.00	1.00	1.00	1.00		1.00	1.00	1.00	1.00	1.00	
Incremental Delay, d2	2.3	0.1	0.1	2.5	0.2		2.6	0.5	0.3	4.0	1.7	
Delay (s)	35.2	30.0	29.9	29.5	22.5		26.9	26.8	25.3	27.9	27.4	
Level of Service	D	C	C	C	C		C	C	C	C	C	
Approach Delay (s)		31.8			27.0			26.4			27.6	
Approach LOS		C			C			C			C	

Intersection Summary			
HCM Average Control Delay	27.2	HCM Level of Service	C
HCM Volume to Capacity ratio	0.55		
Actuated Cycle Length (s)	73.9	Sum of lost time (s)	8.0
Intersection Capacity Utilization	62.7%	ICU Level of Service	B
Analysis Period (min)	15		
c Critical Lane Group			

Movement	EBL	EBT	EBR	WBL	WBT	WBR	NBL	NBT	NBR	SBL	SBT	SBR
Lane Configurations												
Ideal Flow (vphpl)	1900	1900	1900	1900	1900	1900	1900	1900	1900	1900	1900	1900
Lane Width	10	12	16	12	12	12	11	12	12	10	12	12
Total Lost time (s)		4.0			4.0		4.0	4.0		4.0	4.0	
Lane Util. Factor		1.00			1.00		1.00	0.95		1.00	0.95	
Frt		0.96			0.91		1.00	0.99		1.00	0.98	
Flt Protected		0.97			0.98		0.95	1.00		0.95	1.00	
Satd. Flow (prot)		1736			1673		1711	3513		1652	3460	
Flt Permitted		0.97			0.98		0.95	1.00		0.95	1.00	
Satd. Flow (perm)		1736			1673		1711	3513		1652	3460	
Volume (vph)	80	5	30	70	5	135	70	575	30	85	605	105
Peak-hour factor, PHF	0.95	0.95	0.95	0.95	0.95	0.95	0.95	0.95	0.95	0.95	0.95	0.95
Adj. Flow (vph)	84	5	32	74	5	142	74	605	32	89	637	111
RTOR Reduction (vph)	0	15	0	0	63	0	0	3	0	0	12	0
Lane Group Flow (vph)	0	106	0	0	158	0	74	634	0	89	736	0
Turn Type	Split			Split			Prot			Prot		
Protected Phases	4	4		3	3		5	2		1	6	
Permitted Phases												
Actuated Green, G (s)		9.3			8.7		4.0	21.0		8.2	25.3	
Effective Green, g (s)		9.3			8.7		4.0	22.3		8.2	26.5	
Actuated g/C Ratio		0.14			0.13		0.06	0.35		0.13	0.41	
Clearance Time (s)		4.0			4.0		4.0	5.3		4.0	5.2	
Vehicle Extension (s)		3.0			3.0		3.0	3.0		3.0	3.0	
Lane Grp Cap (vph)		250			226		106	1215		210	1422	
v/s Ratio Prot		c0.06			c0.09		c0.04	0.18		c0.05	c0.21	
v/s Ratio Perm												
v/c Ratio		0.42			0.70		0.70	0.52		0.42	0.52	
Uniform Delay, d1		25.2			26.6		29.7	16.8		26.0	14.2	
Progression Factor		1.00			1.00		1.00	1.00		1.00	1.00	
Incremental Delay, d2		1.2			9.1		18.2	0.4		1.4	0.3	
Delay (s)		26.3			35.7		47.8	17.2		27.4	14.5	
Level of Service		C			D		D	B		C	B	
Approach Delay (s)		26.3			35.7			20.4			15.9	
Approach LOS		C			D			C			B	

Intersection Summary			
HCM Average Control Delay	20.6	HCM Level of Service	C
HCM Volume to Capacity ratio	0.51		
Actuated Cycle Length (s)	64.5	Sum of lost time (s)	12.0
Intersection Capacity Utilization	46.5%	ICU Level of Service	A
Analysis Period (min)	15		
c Critical Lane Group			

Movement	EBL	EBT	EBR	WBL	WBT	WBR	NBL	NBT	NBR	SBL	SBT	SBR
Lane Configurations												
Ideal Flow (vphpl)	1900	1900	1900	1900	1900	1900	1900	1900	1900	1900	1900	1900
Lane Width	12	12	12	16	12	16	12	16	12	12	16	11
Total Lost time (s)					4.0	4.0	4.0	4.0			4.0	
Lane Util. Factor					1.00	1.00	1.00	1.00			0.95	
Frpb, ped/bikes					1.00	1.00	1.00	1.00			1.00	
Flpb, ped/bikes					1.00	1.00	1.00	1.00			1.00	
Frt					1.00	0.85	1.00	1.00			0.94	
Flt Protected					0.95	1.00	0.95	1.00			1.00	
Satd. Flow (prot)					1770	1794	1770	2111			3763	
Flt Permitted					0.95	1.00	0.95	1.00			1.00	
Satd. Flow (perm)					1770	1794	1770	2111			3763	
Volume (vph)	0	0	0	25	0	535	40	535	0	0	525	370
Peak-hour factor, PHF	0.95	0.95	0.95	0.95	0.95	0.95	0.95	0.95	0.95	0.95	0.95	0.95
Adj. Flow (vph)	0	0	0	26	0	563	42	563	0	0	553	389
RTOR Reduction (vph)	0	0	0	0	0	167	0	0	0	0	137	0
Lane Group Flow (vph)	0	0	0	0	26	396	42	563	0	0	805	0
Confl. Peds. (#/hr)												
Turn Type				Perm		Perm	Prot					
Protected Phases					6		3	8			4	
Permitted Phases				6		6						
Actuated Green, G (s)					15.8	15.8	2.1	24.3			17.7	
Effective Green, g (s)					16.3	16.3	2.6	24.8			18.2	
Actuated g/C Ratio					0.33	0.33	0.05	0.51			0.37	
Clearance Time (s)					4.5	4.5	4.5	4.5			4.5	
Vehicle Extension (s)					3.0	3.0	3.0	3.0			3.0	
Lane Grp Cap (vph)					588	596	94	1066			1395	
v/s Ratio Prot							0.02	c0.27			0.21	
v/s Ratio Perm					0.01	c0.22						
v/c Ratio					0.04	0.66	0.45	0.53			0.58	
Uniform Delay, d1					11.1	14.1	22.6	8.2			12.4	
Progression Factor					1.00	1.00	1.00	1.00			1.00	
Incremental Delay, d2					0.0	2.8	3.4	0.5			0.6	
Delay (s)					11.1	16.9	25.9	8.7			13.0	
Level of Service					B	B	C	A			B	
Approach Delay (s)		0.0			16.6			9.9			13.0	
Approach LOS		A			B			A			B	

Intersection Summary			
HCM Average Control Delay	13.1	HCM Level of Service	B
HCM Volume to Capacity ratio	0.58		
Actuated Cycle Length (s)	49.1	Sum of lost time (s)	8.0
Intersection Capacity Utilization	70.3%	ICU Level of Service	C
Analysis Period (min)	15		
c Critical Lane Group			

2035 W/O Project AM
24: I-805 SB Ramps & Murray Ridge Rd 1/15/2015

Movement	EBL	EBT	EBR	WBL	WBT	WBR	NBL	NBT	NBR	SBL	SBT	SBR
Lane Configurations												
Ideal Flow (vphpl)	1900	1900	1900	1900	1900	1900	1900	1900	1900	1900	1900	1900
Lane Width	12	14	12	12	12	12	12	16	12	12	15	12
Total Lost time (s)		4.0	4.0					4.0		4.0	4.0	
Lane Util. Factor		1.00	1.00					1.00		1.00	1.00	
Frpb, ped/bikes		1.00	1.00					1.00		1.00	1.00	
Flpb, ped/bikes		1.00	1.00					1.00		1.00	1.00	
Frt		1.00	0.85					0.97		1.00	1.00	
Flt Protected		0.95	1.00					1.00		0.95	1.00	
Satd. Flow (prot)		1888	1583					2052		1770	2049	
Flt Permitted		0.95	1.00					1.00		0.95	1.00	
Satd. Flow (perm)		1888	1583					2052		1770	2049	
Volume (vph)	480	0	15	0	0	0	0	95	25	490	60	0
Peak-hour factor, PHF	0.95	0.95	0.95	0.95	0.95	0.95	0.95	0.95	0.95	0.95	0.95	0.95
Adj. Flow (vph)	505	0	16	0	0	0	0	100	26	516	63	0
RTOR Reduction (vph)	0	0	11	0	0	0	0	11	0	0	0	0
Lane Group Flow (vph)	0	505	5	0	0	0	0	115	0	516	63	0
Confl. Peds. (#/hr)												
Turn Type	Perm		Perm							Prot		
Protected Phases		4						2		1	6	
Permitted Phases	4		4									
Actuated Green, G (s)		22.6	22.6					7.9		24.7	36.8	
Effective Green, g (s)		23.6	23.6					9.2		24.9	38.1	
Actuated g/C Ratio		0.34	0.34					0.13		0.36	0.55	
Clearance Time (s)		5.0	5.0					5.3		4.2	5.3	
Vehicle Extension (s)		3.0	3.0					3.0		3.0	3.0	
Lane Grp Cap (vph)		639	536					271		632	1120	
v/s Ratio Prot								c0.06		c0.29	0.03	
v/s Ratio Perm		0.27	0.00									
v/c Ratio		0.79	0.01					0.42		0.82	0.06	
Uniform Delay, d1		20.8	15.3					27.8		20.3	7.4	
Progression Factor		1.00	1.00					1.00		1.00	1.00	
Incremental Delay, d2		6.6	0.0					1.1		8.0	0.0	
Delay (s)		27.4	15.3					28.9		28.4	7.4	
Level of Service		C	B					C		C	A	
Approach Delay (s)		27.1			0.0			28.9			26.1	
Approach LOS		C			A			C			C	

Intersection Summary				
HCM Average Control Delay	26.8	HCM Level of Service	C	
HCM Volume to Capacity ratio	0.74			
Actuated Cycle Length (s)	69.7	Sum of lost time (s)	12.0	
Intersection Capacity Utilization	70.3%	ICU Level of Service	C	
Analysis Period (min)	15			
c Critical Lane Group				

2035 W/O Project AM
25: Rio San Diego Drive & Qualcomm Wy 1/15/2015

Movement	EBL	EBT	EBR	WBL	WBT	WBR	NBL	NBT	NBR	SBL	SBT	SBR
Lane Configurations												
Ideal Flow (vphpl)	1900	1900	1900	1900	1900	1900	1900	1900	1900	1900	1900	1900
Lane Width	12	12	14	12	12	12	10	12	12	12	12	12
Total Lost time (s)	4.0	4.0	4.0	4.0	4.0	4.0	4.0	4.0		4.0	4.0	
Lane Util. Factor	0.97	1.00	1.00	0.97	0.95	1.00	0.97	0.91		0.97	0.91	
Frpb, ped/bikes	1.00	1.00	1.00	1.00	1.00	1.00	1.00	1.00		1.00	1.00	
Flpb, ped/bikes	1.00	1.00	1.00	1.00	1.00	1.00	1.00	1.00		1.00	1.00	
Frt	1.00	1.00	0.85	1.00	1.00	0.85	1.00	0.92		1.00	0.97	
Flt Protected	0.95	1.00	1.00	0.95	1.00	1.00	0.95	1.00		0.95	1.00	
Satd. Flow (prot)	3433	1863	1689	3433	3539	1583	3204	4667		3433	4928	
Flt Permitted	0.95	1.00	1.00	0.72	1.00	1.00	0.95	1.00		0.20	1.00	
Satd. Flow (perm)	3433	1863	1689	2587	3539	1583	3204	4667		712	4928	
Volume (vph)	160	60	140	225	30	195	95	565	685	180	365	95
Peak-hour factor, PHF	0.95	0.95	0.95	0.95	0.95	0.95	0.95	0.95	0.95	0.95	0.95	0.95
Adj. Flow (vph)	168	63	147	237	32	205	100	595	721	189	384	100
RTOR Reduction (vph)	0	0	94	0	0	165	0	147	0	0	40	0
Lane Group Flow (vph)	168	63	53	237	32	40	100	1169	0	189	444	0
Confl. Peds. (#/hr)												
Turn Type	Prot		pm+ov	Perm		Perm	Prot			Perm		
Protected Phases	5	2	3		6		3	8			4	
Permitted Phases			2	6		6				4		
Actuated Green, G (s)	4.6	24.1	28.2	15.2	15.2	15.2	4.1	48.2		39.7	39.7	
Effective Green, g (s)	5.0	25.2	29.7	16.2	16.2	16.2	4.5	49.5		41.0	41.0	
Actuated g/C Ratio	0.06	0.30	0.36	0.20	0.20	0.20	0.05	0.60		0.50	0.50	
Clearance Time (s)	4.4	5.1	4.4	5.0	5.0	5.0	4.4	5.3		5.3	5.3	
Vehicle Extension (s)	3.0	3.0	3.0	3.0	3.0	3.0	3.0	3.0		3.0	3.0	
Lane Grp Cap (vph)	208	568	688	507	693	310	174	2793		353	2443	
v/s Ratio Prot	c0.05	0.03	0.00		0.01		c0.03	0.25			0.09	
v/s Ratio Perm			0.03	c0.09		0.03				c0.27		
v/c Ratio	0.81	0.11	0.08	0.47	0.05	0.13	0.57	0.42		0.54	0.18	
Uniform Delay, d1	38.4	20.7	17.5	29.4	27.0	27.4	38.2	8.9		14.3	11.6	
Progression Factor	1.00	1.00	1.00	1.00	1.00	1.00	1.00	1.00		1.00	1.00	
Incremental Delay, d2	20.1	0.1	0.0	0.7	0.0	0.2	4.5	0.1		1.6	0.0	
Delay (s)	58.4	20.8	17.5	30.1	27.0	27.6	42.7	9.0		15.9	11.6	
Level of Service	E	C	B	C	C	C	D	A		B	B	
Approach Delay (s)		36.2			28.8			11.4			12.8	
Approach LOS		D			C			B			B	

Intersection Summary				
HCM Average Control Delay	17.7	HCM Level of Service	B	
HCM Volume to Capacity ratio	0.54			
Actuated Cycle Length (s)	82.7	Sum of lost time (s)	16.0	
Intersection Capacity Utilization	54.5%	ICU Level of Service	A	
Analysis Period (min)	15			
c Critical Lane Group				

2035 W/O Project AM
26: Rio San Diego Drive & Rio Bonito Wy 1/15/2015

Movement	EBL	EBT	EBR	WBL	WBT	WBR	NBL	NBT	NBR	SBL	SBT	SBR
Lane Configurations												
Ideal Flow (vphpl)	1900	1900	1900	1900	1900	1900	1900	1900	1900	1900	1900	1900
Total Lost time (s)	4.0	4.0		4.0	4.0			4.0		4.0	4.0	
Lane Util. Factor	1.00	0.95		1.00	0.95			1.00		1.00	1.00	
Frt	1.00	0.98		1.00	0.99			0.97		1.00	0.89	
Flt Protected	0.95	1.00		0.95	1.00			0.97		0.95	1.00	
Satd. Flow (prot)	1770	3476		1770	3519			1757		1770	1649	
Flt Permitted	0.47	1.00		0.41	1.00			0.91		0.74	1.00	
Satd. Flow (perm)	881	3476		759	3519			1639		1385	1649	
Volume (vph)	55	445	60	25	390	15	10	5	5	125	20	65
Peak-hour factor, PHF	0.95	0.95	0.95	0.95	0.95	0.95	0.95	0.95	0.95	0.95	0.95	0.95
Adj. Flow (vph)	58	468	63	26	411	16	11	5	5	132	21	68
RTOR Reduction (vph)	0	12	0	0	3	0	0	3	0	0	39	0
Lane Group Flow (vph)	58	519	0	26	424	0	0	18	0	132	50	0
Turn Type	Perm			Perm			Perm			Perm		
Protected Phases		4			8			2			6	
Permitted Phases	4			8			2			6		
Actuated Green, G (s)	43.1	43.1		43.1	43.1			37.9		37.9	37.9	
Effective Green, g (s)	43.6	43.6		43.6	43.6			38.4		38.4	38.4	
Actuated g/C Ratio	0.48	0.48		0.48	0.48			0.43		0.43	0.43	
Clearance Time (s)	4.5	4.5		4.5	4.5			4.5		4.5	4.5	
Lane Grp Cap (vph)	427	1684		368	1705			699		591	704	
v/s Ratio Prot		c0.15			0.12						0.03	
v/s Ratio Perm	0.07			0.03				0.01		c0.10		
v/c Ratio	0.14	0.31		0.07	0.25			0.03		0.22	0.07	
Uniform Delay, d1	12.8	14.1		12.4	13.6			15.0		16.4	15.3	
Progression Factor	1.00	1.00		1.00	1.00			1.00		1.00	1.00	
Incremental Delay, d2	0.7	0.5		0.4	0.3			0.1		0.9	0.2	
Delay (s)	13.5	14.5		12.8	13.9			15.0		17.2	15.4	
Level of Service	B	B		B	B			B		B	B	
Approach Delay (s)		14.4			13.9			15.0			16.5	
Approach LOS		B			B			B			B	

Intersection Summary				
HCM Average Control Delay	14.6	HCM Level of Service	B	
HCM Volume to Capacity ratio	0.27			
Actuated Cycle Length (s)	90.0	Sum of lost time (s)	8.0	
Intersection Capacity Utilization	39.8%	ICU Level of Service	A	
Analysis Period (min)	15			
c Critical Lane Group				

2035 W/O Project AM
51: Via Alta & Franklin Ridge Road 1/15/2015

Movement	EBT	EBR	WBL	WBT	NBL	NBR
Lane Configurations						
Ideal Flow (vphpl)	1900	1900	1900	1900	1900	1900
Total Lost time (s)	4.0			4.0	4.0	4.0
Lane Util. Factor	1.00			1.00	1.00	1.00
Frt	0.87			1.00	1.00	0.85
Flt Protected	1.00			0.97	0.95	1.00
Satd. Flow (prot)	1626			1811	1770	1583
Flt Permitted	1.00			0.85	0.95	1.00
Satd. Flow (perm)	1626			1586	1770	1583
Volume (vph)	10	165	20	15	85	5
Peak-hour factor, PHF	0.95	0.95	0.95	0.95	0.95	0.95
Adj. Flow (vph)	11	174	21	16	89	5
RTOR Reduction (vph)	92	0	0	0	0	3
Lane Group Flow (vph)	93	0	0	37	89	2
Turn Type			Perm			Perm
Protected Phases	4			8	2	
Permitted Phases			8			2
Actuated Green, G (s)	41.7			41.7	39.3	39.3
Effective Green, g (s)	42.2			42.2	39.8	39.8
Actuated g/C Ratio	0.47			0.47	0.44	0.44
Clearance Time (s)	4.5			4.5	4.5	4.5
Lane Grp Cap (vph)	762			744	783	700
v/s Ratio Prot	c0.06				c0.05	
v/s Ratio Perm				0.02		0.00
v/c Ratio	0.12			0.05	0.11	0.00
Uniform Delay, d1	13.5			13.0	14.7	14.0
Progression Factor	3.99			1.00	1.00	1.00
Incremental Delay, d2	0.3			0.1	0.3	0.0
Delay (s)	54.1			13.1	15.0	14.0
Level of Service	D			B	B	B
Approach Delay (s)	54.1			13.1	15.0	
Approach LOS	D			B	B	

Intersection Summary				
HCM Average Control Delay	37.6	HCM Level of Service	D	
HCM Volume to Capacity ratio	0.12			
Actuated Cycle Length (s)	90.0	Sum of lost time (s)	8.0	
Intersection Capacity Utilization	28.8%	ICU Level of Service	A	
Analysis Period (min)	15			
c Critical Lane Group				

Movement	EBL	EBT	EBR	WBL	WBT	WBR	NBL	NBT	NBR	SBL	SBT	SBR
Lane Configurations												
Ideal Flow (vphpl)	1900	1900	1900	1900	1900	1900	1900	1900	1900	1900	1900	1900
Total Lost time (s)	4.0	4.0		4.0	4.0		4.0	4.0		4.0	4.0	
Lane Util. Factor	1.00	0.95		1.00	0.95		1.00	1.00		1.00	1.00	
Frt	1.00	0.99		1.00	0.94		1.00	0.93		1.00	0.88	
Flt Protected	0.95	1.00		0.95	1.00		0.95	1.00		0.95	1.00	
Satd. Flow (prot)	1770	3494		1770	3327		1770	1735		1770	1640	
Flt Permitted	0.52	1.00		0.51	1.00		0.40	1.00		0.68	1.00	
Satd. Flow (perm)	962	3494		955	3327		750	1735		1271	1640	
Volume (vph)	225	325	30	50	210	140	70	60	50	240	70	275
Peak-hour factor, PHF	0.95	0.95	0.95	0.95	0.95	0.95	0.95	0.95	0.95	0.95	0.95	0.95
Adj. Flow (vph)	237	342	32	53	221	147	74	63	53	253	74	289
RTOR Reduction (vph)	0	8	0	0	73	0	0	32	0	0	156	0
Lane Group Flow (vph)	237	366	0	53	295	0	74	84	0	253	207	0
Turn Type	Perm			Perm			Perm			Perm		
Protected Phases		4			8			2			6	
Permitted Phases	4			8			2			6		
Actuated Green, G (s)	45.0	45.0		45.0	45.0		36.0	36.0		36.0	36.0	
Effective Green, g (s)	45.5	45.5		45.5	45.5		36.5	36.5		36.5	36.5	
Actuated g/C Ratio	0.51	0.51		0.51	0.51		0.41	0.41		0.41	0.41	
Clearance Time (s)	4.5	4.5		4.5	4.5		4.5	4.5		4.5	4.5	
Lane Grp Cap (vph)	486	1766		483	1682		304	704		515	665	
v/s Ratio Prot		0.10			0.09			0.05			0.13	
v/s Ratio Perm	c0.25			0.06			0.10			c0.20		
v/c Ratio	0.49	0.21		0.11	0.18		0.24	0.12		0.49	0.31	
Uniform Delay, d1	14.6	12.3		11.6	12.1		17.6	16.7		19.9	18.2	
Progression Factor	1.00	1.00		0.92	0.97		1.00	1.00		1.04	1.12	
Incremental Delay, d2	3.5	0.3		0.5	0.2		1.9	0.3		3.3	1.2	
Delay (s)	18.1	12.6		11.2	11.9		19.5	17.1		24.0	21.7	
Level of Service	B	B		B	B		B	B		C	C	
Approach Delay (s)		14.7			11.9			18.0			22.6	
Approach LOS		B			B			B			C	

Intersection Summary			
HCM Average Control Delay	17.0	HCM Level of Service	B
HCM Volume to Capacity ratio	0.49		
Actuated Cycle Length (s)	90.0	Sum of lost time (s)	8.0
Intersection Capacity Utilization	60.6%	ICU Level of Service	B
Analysis Period (min)	15		

c Critical Lane Group

Movement	EBT	EBR	WBL	WBT	NBL	NBR
Lane Configurations						
Ideal Flow (vphpl)	1900	1900	1900	1900	1900	1900
Total Lost time (s)	4.0		4.0	4.0	4.0	4.0
Lane Util. Factor	0.95		1.00	0.95	1.00	1.00
Frt	0.96		1.00	1.00	1.00	0.85
Flt Protected	1.00		0.95	1.00	0.95	1.00
Satd. Flow (prot)	3415		1770	3539	1770	1583
Flt Permitted	1.00		0.40	1.00	0.95	1.00
Satd. Flow (perm)	3415		753	3539	1770	1583
Volume (vph)	440	135	250	315	165	25
Peak-hour factor, PHF	0.95	0.95	0.95	0.95	0.95	0.95
Adj. Flow (vph)	463	142	263	332	174	26
RTOR Reduction (vph)	32	0	0	0	0	19
Lane Group Flow (vph)	573	0	263	332	174	7
Turn Type			Perm			Perm
Protected Phases	4			8	2	
Permitted Phases			8			2
Actuated Green, G (s)	58.7		58.7	58.7	22.3	22.3
Effective Green, g (s)	59.2		59.2	59.2	22.8	22.8
Actuated g/C Ratio	0.66		0.66	0.66	0.25	0.25
Clearance Time (s)	4.5		4.5	4.5	4.5	4.5
Lane Grp Cap (vph)	2246		495	2328	448	401
v/s Ratio Prot	0.17			0.09	c0.10	
v/s Ratio Perm			c0.35			0.00
v/c Ratio	0.26		0.53	0.14	0.39	0.02
Uniform Delay, d1	6.3		8.1	5.8	27.8	25.2
Progression Factor	0.61		0.93	0.82	1.00	1.00
Incremental Delay, d2	0.3		4.0	0.1	2.5	0.1
Delay (s)	4.1		11.6	4.9	30.4	25.3
Level of Service	A		B	A	C	C
Approach Delay (s)	4.1			7.8	29.7	
Approach LOS	A			A	C	

Intersection Summary			
HCM Average Control Delay	9.4	HCM Level of Service	A
HCM Volume to Capacity ratio	0.49		
Actuated Cycle Length (s)	90.0	Sum of lost time (s)	8.0
Intersection Capacity Utilization	49.5%	ICU Level of Service	A
Analysis Period (min)	15		

c Critical Lane Group

Movement	EBL	EBT	EBR	WBL	WBT	WBR	NBL	NBT	NBR	SBL	SBT	SBR
Lane Configurations												
Ideal Flow (vphpl)	1900	1900	1900	1900	1900	1900	1900	1900	1900	1900	1900	1900
Total Lost time (s)		4.0	4.0	4.0	4.0		4.0	4.0	4.0	4.0	4.0	
Lane Util. Factor		1.00	1.00	1.00	1.00		0.97	0.91	1.00	1.00	0.95	
Frt		1.00	0.85	1.00	0.88		1.00	1.00	0.85	1.00	0.98	
Flt Protected		0.97	1.00	0.95	1.00		0.95	1.00	1.00	0.95	1.00	
Satd. Flow (prot)		1800	1583	1770	1643		3433	5085	1583	1770	3484	
Flt Permitted		0.76	1.00	0.69	1.00		0.24	1.00	1.00	0.28	1.00	
Satd. Flow (perm)		1411	1583	1278	1643		880	5085	1583	515	3484	
Volume (vph)	70	30	195	160	25	90	215	840	85	50	775	90
Peak-hour factor, PHF	0.95	0.95	0.95	0.95	0.95	0.95	0.95	0.95	0.95	0.95	0.95	0.95
Adj. Flow (vph)	74	32	205	168	26	95	226	884	89	53	816	95
RTOR Reduction (vph)	0	0	100	0	60	0	0	0	40	0	8	0
Lane Group Flow (vph)	0	106	105	168	61	0	226	884	49	53	903	0
Turn Type	Perm		Perm	Perm			Perm		Perm	Perm		
Protected Phases		4			8			2			6	
Permitted Phases	4		4	8			2		2	6		
Actuated Green, G (s)		38.2	38.2	38.2	38.2		57.8	57.8	57.8	57.8	57.8	
Effective Green, g (s)		38.7	38.7	38.7	38.7		58.3	58.3	58.3	58.3	58.3	
Actuated g/C Ratio		0.37	0.37	0.37	0.37		0.56	0.56	0.56	0.56	0.56	
Clearance Time (s)		4.5	4.5	4.5	4.5		4.5	4.5	4.5	4.5	4.5	
Lane Grp Cap (vph)		520	583	471	606		489	2823	879	286	1934	
v/s Ratio Prot					0.04			0.17			c0.26	
v/s Ratio Perm		0.08	0.07	c0.13			0.26		0.03	0.10		
v/c Ratio		0.20	0.18	0.36	0.10		0.46	0.31	0.06	0.19	0.47	
Uniform Delay, d1		22.6	22.4	24.1	21.7		14.0	12.6	10.7	11.6	14.0	
Progression Factor		1.00	1.00	1.00	1.00		1.00	1.00	1.00	1.00	1.00	
Incremental Delay, d2		0.9	0.7	2.1	0.3		3.1	0.3	0.1	1.4	0.8	
Delay (s)		23.5	23.1	26.2	22.1		17.1	12.9	10.8	13.0	14.8	
Level of Service		C	C	C	C		B	B	B	B	B	
Approach Delay (s)		23.2			24.5			13.5			14.7	
Approach LOS		C			C			B			B	

Intersection Summary			
HCM Average Control Delay	16.2	HCM Level of Service	B
HCM Volume to Capacity ratio	0.42		
Actuated Cycle Length (s)	105.0	Sum of lost time (s)	8.0
Intersection Capacity Utilization	56.0%	ICU Level of Service	B
Analysis Period (min)	15		

c Critical Lane Group

Movement	EBL	EBT	EBR	WBL	WBT	WBR	NBL	NBT	NBR	SBL	SBT	SBR
Lane Configurations												
Ideal Flow (vphpl)	1900	1900	1900	1900	1900	1900	1900	1900	1900	1900	1900	1900
Total Lost time (s)		4.0		4.0	4.0		4.0	4.0	4.0	4.0	4.0	
Lane Util. Factor		1.00		0.95	0.95		1.00	0.95	1.00	1.00	0.95	
Frt		0.89		1.00	0.89		1.00	1.00	0.85	1.00	0.99	
Flt Protected		1.00		0.95	0.99		0.95	1.00	1.00	0.95	1.00	
Satd. Flow (prot)		1660		1681	1551		1770	3539	1583	1770	3508	
Flt Permitted		1.00		0.74	0.96		0.21	1.00	1.00	0.38	1.00	
Satd. Flow (perm)		1660		1310	1515		386	3539	1583	708	3508	
Volume (vph)	0	5	20	30	0	20	40	565	15	5	890	55
Peak-hour factor, PHF	0.95	0.95	0.95	0.95	0.95	0.95	0.95	0.95	0.95	0.95	0.95	0.95
Adj. Flow (vph)	0	5	21	32	0	21	42	595	16	5	937	58
RTOR Reduction (vph)	0	13	0	0	13	0	0	0	7	0	4	0
Lane Group Flow (vph)	0	13	0	25	15	0	42	595	9	5	991	0
Turn Type	Perm			Perm			Perm		Perm	Perm		
Protected Phases		4			8			2			6	
Permitted Phases	4			8			2		2	6		
Actuated Green, G (s)		40.0		40.0	40.0		56.0	56.0	56.0	56.0	56.0	
Effective Green, g (s)		40.5		40.5	40.5		56.5	56.5	56.5	56.5	56.5	
Actuated g/C Ratio		0.39		0.39	0.39		0.54	0.54	0.54	0.54	0.54	
Clearance Time (s)		4.5		4.5	4.5		4.5	4.5	4.5	4.5	4.5	
Lane Grp Cap (vph)		640		505	584		208	1904	852	381	1888	
v/s Ratio Prot		0.01						0.17			c0.28	
v/s Ratio Perm				c0.02	0.01		0.11		0.01	0.01		
v/c Ratio		0.02		0.05	0.03		0.20	0.31	0.01	0.01	0.52	
Uniform Delay, d1		20.0		20.2	20.0		12.6	13.5	11.3	11.3	15.6	
Progression Factor		1.00		1.00	1.00		1.00	1.00	1.00	1.00	1.00	
Incremental Delay, d2		0.1		0.2	0.1		2.2	0.4	0.0	0.1	1.0	
Delay (s)		20.0		20.4	20.1		14.7	13.9	11.3	11.3	16.7	
Level of Service		C		C	C		B	B	B	B	B	
Approach Delay (s)		20.0			20.2			13.9			16.6	
Approach LOS		C			C			B			B	

Intersection Summary			
HCM Average Control Delay	15.8	HCM Level of Service	B
HCM Volume to Capacity ratio	0.33		
Actuated Cycle Length (s)	105.0	Sum of lost time (s)	8.0
Intersection Capacity Utilization	47.8%	ICU Level of Service	A
Analysis Period (min)	15		

c Critical Lane Group

Movement	EBL	EBT	EBR	WBL	WBT	WBR	NBL	NBT	NBR	SBL	SBT	SBR
Lane Configurations												
Ideal Flow (vphpl)	1900	1900	1900	1900	1900	1900	1900	1900	1900	1900	1900	1900
Total Lost time (s)		4.0			4.0		4.0	4.0		4.0	4.0	
Lane Util. Factor		1.00			1.00		1.00	1.00		1.00	1.00	
Frt		0.87			0.96		1.00	1.00		1.00	1.00	
Flt Protected		1.00			0.97		0.95	1.00		0.95	1.00	
Satd. Flow (prot)		1622			1742		1770	1858		1770	1860	
Flt Permitted		1.00			0.79		0.35	1.00		0.31	1.00	
Satd. Flow (perm)		1617			1419		654	1858		580	1860	
Volume (vph)	5	5	175	40	10	20	30	580	10	5	530	5
Peak-hour factor, PHF	0.95	0.95	0.95	0.95	0.95	0.95	0.95	0.95	0.95	0.95	0.95	0.95
Adj. Flow (vph)	5	5	184	42	11	21	32	611	11	5	558	5
RTOR Reduction (vph)	0	127	0	0	15	0	0	1	0	0	0	0
Lane Group Flow (vph)	0	67	0	0	59	0	32	621	0	5	563	0
Turn Type	Perm			Perm			Perm			Perm		
Protected Phases		4			8			2			6	
Permitted Phases	4			8			2			6		
Actuated Green, G (s)		27.2			27.2		53.8	53.8		53.8	53.8	
Effective Green, g (s)		27.7			27.7		54.3	54.3		54.3	54.3	
Actuated g/C Ratio		0.31			0.31		0.60	0.60		0.60	0.60	
Clearance Time (s)		4.5			4.5		4.5	4.5		4.5	4.5	
Lane Grp Cap (vph)		498			437		395	1121		350	1122	
v/s Ratio Prot								c0.33			0.30	
v/s Ratio Perm		0.04			c0.04		0.05			0.01		
v/c Ratio		0.13			0.14		0.08	0.55		0.01	0.50	
Uniform Delay, d1		22.5			22.5		7.4	10.6		7.1	10.2	
Progression Factor		1.00			1.00		1.00	1.00		1.00	1.00	
Incremental Delay, d2		0.6			0.6		0.4	2.0		0.1	1.6	
Delay (s)		23.0			23.2		7.8	12.6		7.2	11.8	
Level of Service		C			C		A	B		A	B	
Approach Delay (s)		23.0			23.2			12.4			11.7	
Approach LOS		C			C			B			B	

Intersection Summary			
HCM Average Control Delay	14.0	HCM Level of Service	B
HCM Volume to Capacity ratio	0.41		
Actuated Cycle Length (s)	90.0	Sum of lost time (s)	8.0
Intersection Capacity Utilization	56.5%	ICU Level of Service	B
Analysis Period (min)	15		

c Critical Lane Group

Movement	EBL	EBT	EBR	WBL	WBT	WBR	NBL	NBT	NBR	SBL	SBT	SBR
Lane Configurations												
Ideal Flow (vphpl)	1900	1900	1900	1900	1900	1900	1900	1900	1900	1900	1900	1900
Total Lost time (s)	4.0	4.0	4.0		4.0		4.0	4.0		4.0	4.0	
Lane Util. Factor	1.00	1.00	1.00		1.00		1.00	1.00		1.00	1.00	
Frt	1.00	1.00	0.85		0.94		1.00	0.99		1.00	0.94	
Flt Protected	0.95	1.00	1.00		1.00		0.95	1.00		0.95	1.00	
Satd. Flow (prot)	1770	1863	1583		1735		1770	1842		1770	1747	
Flt Permitted	0.57	1.00	1.00		0.98		0.50	1.00		0.31	1.00	
Satd. Flow (perm)	1068	1863	1583		1704		925	1842		585	1747	
Volume (vph)	305	105	70	20	110	120	75	380	30	45	150	105
Peak-hour factor, PHF	0.95	0.95	0.95	0.95	0.95	0.95	0.95	0.95	0.95	0.95	0.95	0.95
Adj. Flow (vph)	321	111	74	21	116	126	79	400	32	47	158	111
RTOR Reduction (vph)	0	0	35	0	37	0	0	3	0	0	28	0
Lane Group Flow (vph)	321	111	39	0	226	0	79	429	0	47	241	0
Turn Type	Perm		Perm	Perm			Perm			Perm		
Protected Phases		4			8			2			6	
Permitted Phases	4		4	8			2			6		
Actuated Green, G (s)	46.7	46.7	46.7		46.7		34.3	34.3		34.3	34.3	
Effective Green, g (s)	47.2	47.2	47.2		47.2		34.8	34.8		34.8	34.8	
Actuated g/C Ratio	0.52	0.52	0.52		0.52		0.39	0.39		0.39	0.39	
Clearance Time (s)	4.5	4.5	4.5		4.5		4.5	4.5		4.5	4.5	
Lane Grp Cap (vph)	560	977	830		894		358	712		226	676	
v/s Ratio Prot		0.06						c0.23			0.14	
v/s Ratio Perm	c0.30		0.02		0.13		0.09			0.08		
v/c Ratio	0.57	0.11	0.05		0.25		0.22	0.60		0.21	0.36	
Uniform Delay, d1	14.6	10.8	10.4		11.7		18.5	22.1		18.4	19.6	
Progression Factor	1.00	1.00	1.00		1.00		1.00	1.00		1.00	1.00	
Incremental Delay, d2	4.2	0.2	0.1		0.7		1.4	3.8		2.1	1.5	
Delay (s)	18.8	11.1	10.5		12.4		19.9	25.8		20.5	21.1	
Level of Service	B	B	B		B		B	C		C	C	
Approach Delay (s)		15.9			12.4			24.9			21.0	
Approach LOS		B			B			C			C	

Intersection Summary			
HCM Average Control Delay	19.2	HCM Level of Service	B
HCM Volume to Capacity ratio	0.59		
Actuated Cycle Length (s)	90.0	Sum of lost time (s)	8.0
Intersection Capacity Utilization	69.6%	ICU Level of Service	C
Analysis Period (min)	15		

c Critical Lane Group

Movement	EBL	EBT	EBR	WBL	WBT	WBR	NBL	NBT	NBR	SBL	SBT	SBR
Lane Configurations												
Ideal Flow (vphpl)	1900	1900	1900	1900	1900	1900	1900	1900	1900	1900	1900	1900
Total Lost time (s)	4.0	4.0	4.0	4.0	4.0		4.0	4.0	4.0	4.0	4.0	
Lane Util. Factor	1.00	0.95	1.00	1.00	0.95		0.95	0.95	1.00	1.00	1.00	
Frt	1.00	1.00	0.85	1.00	0.99		1.00	1.00	0.85	1.00	0.89	
Flt Protected	0.95	1.00	1.00	0.95	1.00		0.95	0.96	1.00	0.95	1.00	
Satd. Flow (prot)	1770	3539	1583	1770	3501		1681	1699	1583	1770	1650	
Flt Permitted	0.20	1.00	1.00	0.34	1.00		0.74	0.75	1.00	0.45	1.00	
Satd. Flow (perm)	378	3539	1583	629	3501		1316	1323	1583	846	1650	
Volume (vph)	46	600	170	85	770	60	585	60	165	20	5	15
Peak-hour factor, PHF	0.95	0.95	0.95	0.95	0.95	0.95	0.95	0.95	0.95	0.95	0.95	0.95
Adj. Flow (vph)	48	632	179	89	811	63	616	63	174	21	5	16
RTOR Reduction (vph)	0	0	112	0	11	0	0	0	91	0	8	0
Lane Group Flow (vph)	48	632	67	89	863	0	308	371	83	21	13	0
Turn Type	Perm		Perm	Perm			Perm		Perm	Perm		
Protected Phases		4			8			2			6	
Permitted Phases	4		4	8			2		2	6		
Actuated Green, G (s)	19.2	19.2	19.2	19.2	19.2		24.8	24.8	24.8	24.8	24.8	
Effective Green, g (s)	19.7	19.7	19.7	19.7	19.7		25.3	25.3	25.3	25.3	25.3	
Actuated g/C Ratio	0.37	0.37	0.37	0.37	0.37		0.48	0.48	0.48	0.48	0.48	
Clearance Time (s)	4.5	4.5	4.5	4.5	4.5		4.5	4.5	4.5	4.5	4.5	
Vehicle Extension (s)	3.0	3.0	3.0	3.0	3.0		3.0	3.0	3.0	3.0	3.0	
Lane Grp Cap (vph)	141	1315	588	234	1301		628	632	756	404	788	
v/s Ratio Prot		0.18			c0.25						0.01	
v/s Ratio Perm	0.13		0.04	0.14			0.23	c0.28	0.05	0.02		
v/c Ratio	0.34	0.48	0.11	0.38	0.66		0.49	0.59	0.11	0.05	0.02	
Uniform Delay, d1	12.0	12.7	10.9	12.2	13.9		9.5	10.1	7.6	7.4	7.3	
Progression Factor	1.00	1.00	1.00	1.00	1.00		1.00	1.00	1.00	1.00	1.00	
Incremental Delay, d2	1.4	0.3	0.1	1.0	1.3		0.6	1.4	0.1	0.1	0.0	
Delay (s)	13.4	13.0	11.0	13.2	15.2		10.1	11.5	7.7	7.5	7.3	
Level of Service	B	B	B	B	B		B	B	A	A	A	
Approach Delay (s)		12.6			15.0			10.2			7.4	
Approach LOS		B			B			B			A	

Intersection Summary			
HCM Average Control Delay	12.6	HCM Level of Service	B
HCM Volume to Capacity ratio	0.62		
Actuated Cycle Length (s)	53.0	Sum of lost time (s)	8.0
Intersection Capacity Utilization	61.0%	ICU Level of Service	B
Analysis Period (min)	15		

c Critical Lane Group

2035 W/O Project PM
4: Friars Rd EB Ramps & Mission Center Rd 1/15/2015

Movement	EBL	EBT	EBR	WBL	WBT	WBR	NBL	NBT	NBR	SBL	SBT	SBR
Lane Configurations												
Ideal Flow (vphpl)	1900	1900	1900	1900	1900	1900	1900	1900	1900	1900	1900	1900
Lane Width	14	12	13	12	12	12	12	13	12	15	16	12
Total Lost time (s)	4.0	4.0	4.0					4.0		4.0	4.0	
Lane Util. Factor	0.95	0.95	1.00					0.95		0.97	0.95	
Frpb, ped/bikes	1.00	1.00	1.00					1.00		1.00	1.00	
Flpb, ped/bikes	1.00	1.00	1.00					1.00		1.00	1.00	
Frt	1.00	1.00	0.85					0.97		1.00	1.00	
Flt Protected	0.95	0.95	1.00					1.00		0.95	1.00	
Satd. Flow (prot)	1793	1681	1636					3545		3776	4011	
Flt Permitted	0.95	0.95	1.00					1.00		0.95	1.00	
Satd. Flow (perm)	1793	1681	1636					3545		3776	4011	
Volume (vph)	610	0	285	0	0	0	0	835	215	575	1100	0
Peak-hour factor, PHF	0.95	0.95	0.95	0.95	0.95	0.95	0.95	0.95	0.95	0.95	0.95	0.95
Adj. Flow (vph)	642	0	300	0	0	0	0	879	226	605	1158	0
RTOR Reduction (vph)	0	0	76	0	0	0	0	26	0	0	0	0
Lane Group Flow (vph)	323	319	224	0	0	0	0	1079	0	605	1158	0
Confl. Peds. (#/hr)												
Turn Type	Split		Perm							Prot		
Protected Phases	4	4						2		1	6	
Permitted Phases			4									
Actuated Green, G (s)	18.6	18.6	18.6					28.4		16.0	48.2	
Effective Green, g (s)	19.5	19.5	19.5					29.4		16.4	49.8	
Actuated g/C Ratio	0.25	0.25	0.25					0.38		0.21	0.64	
Clearance Time (s)	4.9	4.9	4.9					5.0		4.4	5.6	
Vehicle Extension (s)	3.0	3.0	3.0					3.0		3.0	3.0	
Lane Grp Cap (vph)	452	424	413					1348		801	2584	
v/s Ratio Prot	0.18	c0.19						c0.30		c0.16	0.29	
v/s Ratio Perm			0.14									
v/c Ratio	0.71	0.75	0.54					0.80		0.76	0.45	
Uniform Delay, d1	26.4	26.7	25.0					21.3		28.6	6.9	
Progression Factor	1.00	1.00	1.00					1.00		1.00	1.00	
Incremental Delay, d2	5.3	7.4	1.5					3.5		4.1	0.1	
Delay (s)	31.7	34.1	26.5					24.8		32.6	7.0	
Level of Service	C	C	C					C		C	A	
Approach Delay (s)		30.8			0.0			24.8			15.8	
Approach LOS		C			A			C			B	

Intersection Summary			
HCM Average Control Delay	22.1	HCM Level of Service	C
HCM Volume to Capacity ratio	0.77		
Actuated Cycle Length (s)	77.3	Sum of lost time (s)	12.0
Intersection Capacity Utilization	121.6%	ICU Level of Service	H
Analysis Period (min)	15		
c Critical Lane Group			

2035 W/O Project PM
5: Friars Rd WB Ramps & Mission Center Rd 1/15/2015

Movement	EBL	EBT	EBR	WBL	WBT	WBR	NBL	NBT	NBR	SBL	SBT	SBR
Lane Configurations												
Ideal Flow (vphpl)	1900	1900	1900	1900	1900	1900	1900	1900	1900	1900	1900	1900
Lane Width	12	12	12	15	12	15	10	12	12	12	14	11
Total Lost time (s)				4.0	4.0	4.0	4.0	4.0			4.0	4.0
Lane Util. Factor				0.95	0.95	1.00	0.97	0.95			0.95	1.00
Frpb, ped/bikes				1.00	1.00	1.00	1.00	1.00			1.00	1.00
Flpb, ped/bikes				1.00	1.00	1.00	1.00	1.00			1.00	1.00
Frt				1.00	1.00	0.85	1.00	1.00			1.00	0.85
Flt Protected				0.95	0.95	1.00	0.95	1.00			1.00	1.00
Satd. Flow (prot)				1849	1681	1742	3204	3539			3775	1531
Flt Permitted				0.95	0.95	1.00	0.95	1.00			1.00	1.00
Satd. Flow (perm)				1849	1681	1742	3204	3539			3775	1531
Volume (vph)	0	0	0	320	0	580	290	1155	0	0	1355	280
Peak-hour factor, PHF	0.95	0.95	0.95	0.95	0.95	0.95	0.95	0.95	0.95	0.95	0.95	0.95
Adj. Flow (vph)	0	0	0	337	0	611	305	1216	0	0	1426	295
RTOR Reduction (vph)	0	0	0	0	0	41	0	0	0	0	0	97
Lane Group Flow (vph)	0	0	0	172	165	570	305	1216	0	0	1426	198
Confl. Peds. (#/hr)												
Turn Type				Split		Perm	Prot					Perm
Protected Phases				8	8		5	2			6	
Permitted Phases						8						6
Actuated Green, G (s)				29.7	29.7	29.7	9.6	50.0			35.0	35.0
Effective Green, g (s)				30.6	30.6	30.6	10.0	51.0			37.0	37.0
Actuated g/C Ratio				0.34	0.34	0.34	0.11	0.57			0.41	0.41
Clearance Time (s)				4.9	4.9	4.9	4.4	5.0			6.0	6.0
Vehicle Extension (s)				3.0	3.0	3.0	3.0	3.0			3.0	3.0
Lane Grp Cap (vph)				631	574	595	358	2014			1559	632
v/s Ratio Prot				0.09	0.10		c0.10	0.34			c0.38	
v/s Ratio Perm						c0.33						0.13
v/c Ratio				0.27	0.29	0.96	0.85	0.60			0.91	0.31
Uniform Delay, d1				21.4	21.5	28.9	39.1	12.7			24.8	17.7
Progression Factor				1.00	1.00	1.00	1.00	1.00			1.00	1.00
Incremental Delay, d2				0.2	0.3	26.5	17.4	0.5			8.6	0.3
Delay (s)				21.7	21.8	55.4	56.5	13.2			33.5	18.0
Level of Service				C	C	E	E	B			C	B
Approach Delay (s)		0.0			43.4			21.9			30.8	
Approach LOS		A			D			C			C	

Intersection Summary			
HCM Average Control Delay	30.4	HCM Level of Service	C
HCM Volume to Capacity ratio	0.92		
Actuated Cycle Length (s)	89.6	Sum of lost time (s)	12.0
Intersection Capacity Utilization	121.6%	ICU Level of Service	H
Analysis Period (min)	15		
c Critical Lane Group			

2035 W/O Project PM
7: Friars Rd EB Ramps & Qualcomm Wy 1/15/2015

Movement	EBL	EBT	EBR	WBL	WBT	WBR	NBL	NBT	NBR	SBL	SBT	SBR
Lane Configurations												
Ideal Flow (vphpl)	1900	1900	1900	1900	1900	1900	1900	1900	1900	1900	1900	1900
Lane Width	12	11	14	12	12	12	12	12	15	12	12	12
Total Lost time (s)		4.0	4.0					4.0	4.0	4.0	4.0	
Lane Util. Factor		1.00	1.00					0.95	1.00	1.00	0.95	
Frpb, ped/bikes		1.00	1.00					1.00	1.00	1.00	1.00	
Flpb, ped/bikes		1.00	1.00					1.00	1.00	1.00	1.00	
Frt		1.00	0.85					1.00	0.85	1.00	1.00	
Flt Protected		0.95	1.00					1.00	1.00	0.95	1.00	
Satd. Flow (prot)		1711	1689					3539	1742	1770	3539	
Flt Permitted		0.95	1.00					1.00	1.00	0.95	1.00	
Satd. Flow (perm)		1711	1689					3539	1742	1770	3539	
Volume (vph)	670	0	280	0	0	0	0	1190	635	370	725	0
Peak-hour factor, PHF	0.95	0.95	0.95	0.95	0.95	0.95	0.95	0.95	0.95	0.95	0.95	0.95
Adj. Flow (vph)	705	0	295	0	0	0	0	1253	668	389	763	0
RTOR Reduction (vph)	0	0	113	0	0	0	0	0	365	0	0	0
Lane Group Flow (vph)	0	705	182	0	0	0	0	1253	303	389	763	0
Confl. Peds. (#/hr)												
Turn Type	Split		Perm						Perm	Prot		
Protected Phases	4	4						2		1	6	
Permitted Phases			4						2			
Actuated Green, G (s)		40.1	40.1					34.9	34.9	20.6	60.1	
Effective Green, g (s)		41.0	41.0					36.0	36.0	21.0	61.0	
Actuated g/C Ratio		0.37	0.37					0.33	0.33	0.19	0.55	
Clearance Time (s)		4.9	4.9					5.1	5.1	4.4	4.9	
Vehicle Extension (s)		3.0	3.0					3.0	3.0	3.0	3.0	
Lane Grp Cap (vph)		638	630					1158	570	338	1963	
v/s Ratio Prot		c0.41						c0.35		c0.22	0.22	
v/s Ratio Perm			0.11						0.17			
v/c Ratio		1.11	0.29					1.08	0.53	1.15	0.39	
Uniform Delay, d1		34.5	24.3					37.0	30.1	44.5	13.9	
Progression Factor		1.00	1.00					1.00	1.00	1.00	1.00	
Incremental Delay, d2		67.9	0.3					51.6	3.5	96.5	0.6	
Delay (s)		102.4	24.5					88.6	33.7	141.0	14.5	
Level of Service		F	C					F	C	F	B	
Approach Delay (s)		79.4			0.0			69.5			57.2	
Approach LOS		E			A			E			E	

Intersection Summary			
HCM Average Control Delay	68.5	HCM Level of Service	E
HCM Volume to Capacity ratio	1.11		
Actuated Cycle Length (s)	110.0	Sum of lost time (s)	12.0
Intersection Capacity Utilization	137.5%	ICU Level of Service	H
Analysis Period (min)	15		
c Critical Lane Group			

2035 W/O Project PM
8: Friars Rd WB Ramps & Qualcomm Wy 1/15/2015

Movement	EBL	EBT	EBR	WBL	WBT	WBR	NBL	NBT	NBR	SBL	SBT	SBR
Lane Configurations												
Ideal Flow (vphpl)	1900	1900	1900	1900	1900	1900	1900	1900	1900	1900	1900	1900
Lane Width	12	12	12	12	16	12	12	11	12	12	16	16
Total Lost time (s)				4.0	4.0		4.0	4.0			4.0	
Lane Util. Factor				0.95	0.95		1.00	1.00			0.95	
Frpb, ped/bikes				1.00	1.00		1.00	1.00			1.00	
Flpb, ped/bikes				1.00	1.00		1.00	1.00			1.00	
Frt				1.00	0.88		1.00	1.00			0.94	
Flt Protected				0.95	0.99		0.95	1.00			1.00	
Satd. Flow (prot)				1681	1751		1770	1801			3759	
Flt Permitted				0.95	0.99		0.95	1.00			1.00	
Satd. Flow (perm)				1681	1751		1770	1801			3759	
Volume (vph)	0	0	0	415	0	270	865	995	0	0	680	490
Peak-hour factor, PHF	0.95	0.95	0.95	0.95	0.95	0.95	0.95	0.95	0.95	0.95	0.95	0.95
Adj. Flow (vph)	0	0	0	437	0	284	911	1047	0	0	716	516
RTOR Reduction (vph)	0	0	0	0	92	0	0	0	0	0	93	0
Lane Group Flow (vph)	0	0	0	358	271	0	911	1047	0	0	1139	0
Confl. Peds. (#/hr)												
Turn Type				Split			Prot					
Protected Phases				8	8		5	2			6	
Permitted Phases												
Actuated Green, G (s)				28.0	28.0		61.2	102.0			36.1	
Effective Green, g (s)				28.9	28.9		62.1	103.1			37.0	
Actuated g/C Ratio				0.21	0.21		0.44	0.74			0.26	
Clearance Time (s)				4.9	4.9		4.9	5.1			4.9	
Vehicle Extension (s)				3.0	3.0		3.0	3.0			3.0	
Lane Grp Cap (vph)				347	361		785	1326			993	
v/s Ratio Prot				c0.21	0.15		c0.51	0.58			c0.30	
v/s Ratio Perm												
v/c Ratio				1.03	0.75		1.16	0.79			1.15	
Uniform Delay, d1				55.5	52.2		39.0	11.6			51.5	
Progression Factor				1.00	1.00		1.00	1.00			1.00	
Incremental Delay, d2				56.7	8.5		86.1	4.8			78.3	
Delay (s)				112.3	60.7		125.1	16.5			129.8	
Level of Service				F	E		F	B			F	
Approach Delay (s)		0.0			86.3			67.0			129.8	
Approach LOS		A			F			E			F	

Intersection Summary			
HCM Average Control Delay	90.3	HCM Level of Service	F
HCM Volume to Capacity ratio	1.13		
Actuated Cycle Length (s)	140.0	Sum of lost time (s)	12.0
Intersection Capacity Utilization	137.5%	ICU Level of Service	H
Analysis Period (min)	15		
c Critical Lane Group			

Movement	EBT	EBR	WBL	WBT	NBL	NBR
Lane Configurations						
Ideal Flow (vphpl)	1900	1900	1900	1900	1900	1900
Total Lost time (s)	4.0	4.0	4.0	4.0	4.0	
Lane Util. Factor	0.95	1.00	0.97	1.00	0.97	
Frt	1.00	0.85	1.00	1.00	0.94	
Flt Protected	1.00	1.00	0.95	1.00	0.97	
Satd. Flow (prot)	3539	1583	3433	1863	3297	
Flt Permitted	1.00	1.00	0.51	1.00	0.97	
Satd. Flow (perm)	3539	1583	1830	1863	3297	
Volume (vph)	350	365	505	315	675	455
Peak-hour factor, PHF	0.95	0.95	0.95	0.95	0.95	0.95
Adj. Flow (vph)	368	384	532	332	711	479
RTOR Reduction (vph)	0	212	0	0	135	0
Lane Group Flow (vph)	368	172	532	332	1055	0
Turn Type		Perm	Perm			
Protected Phases	4			8	2	
Permitted Phases		4	8			
Actuated Green, G (s)	39.9	39.9	39.9	39.9	41.1	
Effective Green, g (s)	40.4	40.4	40.4	40.4	41.6	
Actuated g/C Ratio	0.45	0.45	0.45	0.45	0.46	
Clearance Time (s)	4.5	4.5	4.5	4.5	4.5	
Lane Grp Cap (vph)	1589	711	821	836	1524	
v/s Ratio Prot	0.10			0.18	c0.32	
v/s Ratio Perm		0.11	c0.29			
v/c Ratio	0.23	0.24	0.65	0.40	0.69	
Uniform Delay, d1	15.3	15.3	19.3	16.6	19.1	
Progression Factor	1.09	2.39	1.00	1.00	1.00	
Incremental Delay, d2	0.3	0.8	3.9	1.4	2.6	
Delay (s)	17.0	37.5	23.2	18.0	21.7	
Level of Service	B	D	C	B	C	
Approach Delay (s)	27.5			21.2	21.7	
Approach LOS	C			C	C	

Intersection Summary			
HCM Average Control Delay	23.1	HCM Level of Service	C
HCM Volume to Capacity ratio	0.67		
Actuated Cycle Length (s)	90.0	Sum of lost time (s)	8.0
Intersection Capacity Utilization	67.7%	ICU Level of Service	C
Analysis Period (min)	15		

c Critical Lane Group

Movement	EBL	EBT	EBR	WBL	WBT	WBR	NBL	NBT	NBR	SBL	SBT	SBR
Lane Configurations												
Ideal Flow (vphpl)	1900	1900	1900	1900	1900	1900	1900	1900	1900	1900	1900	1900
Lane Width	14	12	12	10	12	12	12	11	13	12	15	10
Total Lost time (s)	4.0	4.0		4.0	4.0			4.0	4.0		4.0	
Lane Util. Factor	1.00	0.91		1.00	0.91			1.00	1.00		1.00	
Frt	1.00	1.00		1.00	1.00			1.00	0.85		0.96	
Flt Protected	0.95	1.00		0.95	1.00			0.98	1.00		0.97	
Satd. Flow (prot)	1888	5062		1652	5067			1757	1636		1908	
Flt Permitted	0.95	1.00		0.95	1.00			0.90	1.00		0.78	
Satd. Flow (perm)	1888	5062		1652	5067			1621	1636		1544	
Volume (vph)	10	2690	85	65	1420	35	5	5	135	165	5	60
Peak-hour factor, PHF	0.95	0.95	0.95	0.95	0.95	0.95	0.95	0.95	0.95	0.95	0.95	0.95
Adj. Flow (vph)	11	2832	89	68	1495	37	5	5	142	174	5	63
RTOR Reduction (vph)	0	2	0	0	1	0	0	0	51	0	9	0
Lane Group Flow (vph)	11	2919	0	68	1531	0	0	10	91	0	233	0
Turn Type	Prot			Prot			Perm		Perm	Perm		
Protected Phases	5	2		1	6			8			4	
Permitted Phases							8		8	4		
Actuated Green, G (s)	1.4	82.3		6.8	87.7			22.7	22.7		22.7	
Effective Green, g (s)	1.8	84.5		7.2	89.9			23.6	23.6		23.6	
Actuated g/C Ratio	0.01	0.66		0.06	0.71			0.19	0.19		0.19	
Clearance Time (s)	4.4	6.2		4.4	6.2			4.9	4.9		4.9	
Vehicle Extension (s)	3.0	3.0		3.0	3.0			3.0	3.0		3.0	
Lane Grp Cap (vph)	27	3360		93	3578			301	303		286	
v/s Ratio Prot	0.01	c0.58		c0.04	0.30							
v/s Ratio Perm								0.01	0.06		c0.15	
v/c Ratio	0.41	0.87		0.73	0.43			0.03	0.30		0.81	
Uniform Delay, d1	62.2	17.0		59.1	7.9			42.5	44.7		49.8	
Progression Factor	1.00	1.00		1.00	1.00			1.00	1.00		1.00	
Incremental Delay, d2	9.7	2.6		25.3	0.1			0.0	0.6		16.1	
Delay (s)	71.9	19.6		84.4	8.0			42.5	45.3		65.9	
Level of Service	E	B		F	A			D	D		E	
Approach Delay (s)		19.8			11.2			45.1			65.9	
Approach LOS		B			B			D			E	

Intersection Summary			
HCM Average Control Delay	20.1	HCM Level of Service	C
HCM Volume to Capacity ratio	0.85		
Actuated Cycle Length (s)	127.3	Sum of lost time (s)	12.0
Intersection Capacity Utilization	85.3%	ICU Level of Service	E
Analysis Period (min)	15		

c Critical Lane Group

Movement	EBL	EBT	EBR	WBL	WBT	WBR	NBL	NBT	NBR	SBL	SBT	SBR
Lane Configurations												
Ideal Flow (vphpl)	1900	1900	1900	1900	1900	1900	1900	1900	1900	1900	1900	1900
Lane Width	12	12	14	10	12	12	9	12	16	12	12	12
Total Lost time (s)	4.0	4.0	4.0	4.0	4.0	4.0	4.0	4.0	4.0	4.0	4.0	4.0
Lane Util. Factor	1.00	0.91	1.00	0.97	0.91	1.00	0.97	1.00	1.00	0.97	0.95	0.95
Frpb, ped/bikes	1.00	1.00	1.00	1.00	1.00	1.00	1.00	1.00	1.00	1.00	1.00	1.00
Flpb, ped/bikes	1.00	1.00	1.00	1.00	1.00	1.00	1.00	1.00	1.00	1.00	1.00	1.00
Frt	1.00	1.00	0.85	1.00	1.00	0.85	1.00	1.00	0.85	1.00	0.93	0.85
Flt Protected	0.95	1.00	1.00	0.95	1.00	1.00	0.95	1.00	1.00	0.95	1.00	1.00
Satd. Flow (prot)	1770	5085	1689	3204	5085	1583	3090	1863	1794	3433	1643	1504
Flt Permitted	0.95	1.00	1.00	0.95	1.00	1.00	0.95	1.00	1.00	0.95	1.00	1.00
Satd. Flow (perm)	1770	5085	1689	3204	5085	1583	3090	1863	1794	3433	1643	1504
Volume (vph)	165	2470	375	200	1270	80	175	20	285	20	10	35
Peak-hour factor, PHF	0.95	0.95	0.95	0.95	0.95	0.95	0.95	0.95	0.95	0.95	0.95	0.95
Adj. Flow (vph)	174	2600	395	211	1337	84	184	21	300	21	11	37
RTOR Reduction (vph)	0	0	97	0	0	39	0	0	148	0	9	6
Lane Group Flow (vph)	174	2600	298	211	1337	45	184	21	152	21	12	21
Confl. Peds. (#/hr)												
Turn Type	Prot		pm+ov	Prot		pm+ov	Prot		Perm	Prot		pm+ov
Protected Phases	5	2	3	1	6	7	3	8		7	4	5
Permitted Phases			2			6			8			4
Actuated Green, G (s)	23.3	83.9	95.5	10.6	71.2	75.3	11.6	26.5	26.5	4.1	19.0	42.3
Effective Green, g (s)	23.7	86.1	98.1	11.0	73.4	77.9	12.0	27.4	27.4	4.5	19.9	43.6
Actuated g/C Ratio	0.16	0.59	0.68	0.08	0.51	0.54	0.08	0.19	0.19	0.03	0.14	0.30
Clearance Time (s)	4.4	6.2	4.4	4.4	6.2	4.4	4.4	4.9	4.9	4.4	4.9	4.4
Vehicle Extension (s)	3.0	3.0	3.0	3.0	3.0	3.0	3.0	3.0	3.0	3.0	3.0	3.0
Lane Grp Cap (vph)	289	3019	1143	243	2574	850	256	352	339	107	225	452
v/s Ratio Prot	0.10	c0.51	0.02	c0.07	0.26	0.00	c0.06	0.01		0.01	0.01	0.01
v/s Ratio Perm			0.16			0.03			c0.08			0.01
v/c Ratio	0.60	0.86	0.26	0.87	0.52	0.05	0.72	0.06	0.45	0.20	0.05	0.05
Uniform Delay, d1	56.3	24.5	9.2	66.3	24.0	16.0	64.9	48.2	52.1	68.5	54.4	36.0
Progression Factor	1.00	1.00	1.00	1.00	1.00	1.00	1.00	1.00	1.00	1.00	1.00	1.00
Incremental Delay, d2	3.5	3.5	0.1	26.3	0.8	0.0	9.3	0.1	0.9	0.9	0.1	0.0
Delay (s)	59.8	28.0	9.3	92.5	24.7	16.0	74.1	48.3	53.0	69.4	54.5	36.0
Level of Service	E	C	A	F	C	B	E	D	D	E	D	D
Approach Delay (s)		27.4			33.1			60.5			51.8	
Approach LOS		C			C			E			D	

Intersection Summary			
HCM Average Control Delay	32.5	HCM Level of Service	C
HCM Volume to Capacity ratio	0.77		
Actuated Cycle Length (s)	145.0	Sum of lost time (s)	12.0
Intersection Capacity Utilization	78.7%	ICU Level of Service	D
Analysis Period (min)	15		

c Critical Lane Group

Movement	EBL	EBT	EBR	WBL	WBT	WBR	NBL	NBT	NBR	SBL	SBT	SBR
Lane Configurations												
Ideal Flow (vphpl)	1900	1900	1900	1900	1900	1900	1900	1900	1900	1900	1900	1900
Lane Width	10	12	16	10	13	12	11	16	12	11	15	12
Total Lost time (s)	4.0	4.0	4.0	4.0	4.0	4.0	4.0	4.0	4.0	4.0	4.0	4.0
Lane Util. Factor	0.97	0.91	1.00	0.97	0.91	1.00	0.97	1.00	1.00	0.97	1.00	1.00
Frpb, ped/bikes	1.00	1.00	1.00	1.00	1.00	1.00	1.00	1.00	1.00	1.00	1.00	1.00
Flpb, ped/bikes	1.00	1.00	1.00	1.00	1.00	1.00	1.00	1.00	1.00	1.00	1.00	1.00
Frt	1.00	1.00	0.85	1.00	1.00	0.85	1.00	1.00	0.85	1.00	1.00	0.85
Flt Protected	0.95	1.00	1.00	0.95	1.00	1.00	0.95	1.00	1.00	0.95	1.00	1.00
Satd. Flow (prot)	3204	5085	1794	3204	5255	1583	3319	2111	1583	3319	2049	1583
Flt Permitted	0.95	1.00	1.00	0.95	1.00	1.00	0.95	1.00	1.00	0.95	1.00	1.00
Satd. Flow (perm)	3204	5085	1794	3204	5255	1583	3319	2111	1583	3319	2049	1583
Volume (vph)	230	2280	245	565	1270	160	185	30	685	65	20	80
Peak-hour factor, PHF	0.95	0.95	0.95	0.95	0.95	0.95	0.95	0.95	0.95	0.95	0.95	0.95
Adj. Flow (vph)	242	2400	258	595	1337	168	195	32	721	68	21	84
RTOR Reduction (vph)	0	0	86	0	0	61	0	0	1	0	0	75
Lane Group Flow (vph)	242	2400	172	595	1337	107	195	32	720	68	21	9
Confl. Peds. (#/hr)												
Turn Type	Prot		Perm	Prot		pm+ov	Prot		pm+ov	Prot		Perm
Protected Phases	5	2		1	6	7	3	8	1	7	4	
Permitted Phases			2			6			8			4
Actuated Green, G (s)	14.0	61.5	61.5	23.9	71.2	80.1	11.9	16.2	40.1	8.9	13.2	13.2
Effective Green, g (s)	14.4	63.5	63.5	24.3	73.4	82.7	12.3	17.1	41.4	9.3	14.1	14.1
Actuated g/C Ratio	0.11	0.49	0.49	0.19	0.56	0.64	0.09	0.13	0.32	0.07	0.11	0.11
Clearance Time (s)	4.4	6.0	6.0	4.4	6.2	4.4	4.4	4.9	4.4	4.4	4.9	4.9
Vehicle Extension (s)	3.0	3.0	3.0	3.0	3.0	3.0	3.0	3.0	3.0	3.0	3.0	3.0
Lane Grp Cap (vph)	354	2480	875	598	2962	1054	314	277	552	237	222	171
v/s Ratio Prot	0.08	c0.47		0.19	0.25	0.01	c0.06	0.02	c0.24	0.02	0.01	
v/s Ratio Perm			0.10			0.06			0.21			0.01
v/c Ratio	0.68	0.97	0.20	0.99	0.45	0.10	0.62	0.12	1.30	0.29	0.09	0.05
Uniform Delay, d1	55.7	32.4	18.9	52.9	16.6	9.3	56.7	49.9	44.4	57.3	52.3	52.1
Progression Factor	1.00	1.00	1.00	1.00	1.00	1.00	1.00	1.00	1.00	1.00	1.00	1.00
Incremental Delay, d2	5.4	11.4	0.1	35.3	0.1	0.0	3.8	0.2	149.5	0.7	0.2	0.1
Delay (s)	61.1	43.8	19.0	88.2	16.7	9.3	60.5	50.1	193.9	58.0	52.5	52.2
Level of Service	E	D	B	F	B	A	E	D	F	E	D	D
Approach Delay (s)		43.0			36.4			161.6			54.5	
Approach LOS		D			D			F			D	

Intersection Summary			
HCM Average Control Delay	59.4	HCM Level of Service	E
HCM Volume to Capacity ratio	1.08		
Actuated Cycle Length (s)	130.2	Sum of lost time (s)	12.0
Intersection Capacity Utilization	99.8%	ICU Level of Service	F
Analysis Period (min)	15		

c Critical Lane Group

Movement	EBL	EBT	EBR	WBL	WBT	WBR	NBL	NBT	NBR	SBL	SBT	SBR
Lane Configurations												
Ideal Flow (vphpl)	1900	1900	1900	1900	1900	1900	1900	1900	1900	1900	1900	1900
Lane Width	12	10	12	12	16	12	12	16	12	12	16	12
Total Lost time (s)		4.0	4.0		4.0		4.0	4.0		4.0	4.0	4.0
Lane Util. Factor		1.00	1.00		1.00		1.00	1.00		1.00	1.00	1.00
Frpb, ped/bikes		1.00	1.00		1.00		1.00	1.00		1.00	1.00	1.00
Flpb, ped/bikes		1.00	1.00		1.00		1.00	1.00		1.00	1.00	1.00
Frt		1.00	0.85		1.00		1.00	0.98		1.00	1.00	0.85
Flt Protected		0.96	1.00		0.97		0.95	1.00		0.95	1.00	1.00
Satd. Flow (prot)		1676	1583		2039		1770	2066		1770	2111	1583
Flt Permitted		0.96	1.00		0.97		0.95	1.00		0.95	1.00	1.00
Satd. Flow (perm)		1676	1583		2039		1770	2066		1770	2111	1583
Volume (vph)	275	95	990	90	50	5	735	540	90	20	410	245
Peak-hour factor, PHF	0.95	0.95	0.95	0.95	0.95	0.95	0.95	0.95	0.95	0.95	0.95	0.95
Adj. Flow (vph)	289	100	1042	95	53	5	774	568	95	21	432	258
RTOR Reduction (vph)	0	0	393	0	1	0	0	4	0	0	0	58
Lane Group Flow (vph)	0	389	649	0	152	0	774	659	0	21	432	200
Confl. Peds. (#/hr)												
Turn Type	Split		Perm	Split			Prot			Prot		Perm
Protected Phases	4	4		3	3		5	2		1	6	
Permitted Phases			4									6
Actuated Green, G (s)		35.7	35.7		14.9		40.6	66.3		2.4	28.1	28.1
Effective Green, g (s)		37.0	37.0		15.8		41.0	67.2		2.8	29.0	29.0
Actuated g/C Ratio		0.27	0.27		0.11		0.30	0.48		0.02	0.21	0.21
Clearance Time (s)		5.3	5.3		4.9		4.4	4.9		4.4	4.9	4.9
Vehicle Extension (s)		3.5	3.5		2.0		2.0	3.9		2.0	3.9	3.9
Lane Grp Cap (vph)		447	422		232		523	1000		36	441	331
v/s Ratio Prot		0.23			c0.07		c0.44	0.32		0.01	c0.20	
v/s Ratio Perm			c0.41									0.13
v/c Ratio		0.87	1.54		0.66		1.48	0.66		0.58	0.98	0.60
Uniform Delay, d1		48.6	50.9		58.9		48.9	27.1		67.4	54.6	49.7
Progression Factor		1.00	1.00		1.00		1.00	1.00		1.00	1.00	1.00
Incremental Delay, d2		17.0	253.6		5.0		226.1	1.7		14.6	37.2	3.5
Delay (s)		65.6	304.5		63.9		275.0	28.9		82.0	91.8	53.2
Level of Service		E	F		E		F	C		F	F	D
Approach Delay (s)		239.5			63.9			161.4			77.5	
Approach LOS		F			E			F			E	

Intersection Summary			
HCM Average Control Delay	171.4	HCM Level of Service	F
HCM Volume to Capacity ratio	1.27		
Actuated Cycle Length (s)	138.8	Sum of lost time (s)	16.0
Intersection Capacity Utilization	100.8%	ICU Level of Service	G
Analysis Period (min)	15		
c Critical Lane Group			

Movement	EBL	EBT	EBR	WBL	WBT	WBR	NBL	NBT	NBR	SBL	SBT	SBR
Lane Configurations												
Ideal Flow (vphpl)	1900	1900	1900	1900	1900	1900	1900	1900	1900	1900	1900	1900
Lane Width	12	12	16	12	12	12	10	12	12	12	12	12
Total Lost time (s)	4.0	4.0	4.0	4.0	4.0		4.0	4.0	4.0	4.0	4.0	
Lane Util. Factor	1.00	1.00	1.00	0.97	1.00		0.97	0.95	1.00	1.00	0.95	
Frpb, ped/bikes	1.00	1.00	1.00	1.00	1.00		1.00	1.00	1.00	1.00	1.00	
Flpb, ped/bikes	1.00	1.00	1.00	1.00	1.00		1.00	1.00	1.00	1.00	1.00	
Frt	1.00	1.00	0.85	1.00	0.86		1.00	1.00	0.85	1.00	0.98	
Flt Protected	0.95	1.00	1.00	0.95	1.00		0.95	1.00	1.00	0.95	1.00	
Satd. Flow (prot)	1770	1863	1794	3433	1611		3204	3539	1583	1770	3475	
Flt Permitted	0.95	1.00	1.00	0.95	1.00		0.95	1.00	1.00	0.95	1.00	
Satd. Flow (perm)	1770	1863	1794	3433	1611		3204	3539	1583	1770	3475	
Volume (vph)	320	75	380	450	50	460	170	490	690	430	545	75
Peak-hour factor, PHF	0.95	0.95	0.95	0.95	0.95	0.95	0.95	0.95	0.95	0.95	0.95	0.95
Adj. Flow (vph)	337	79	400	474	53	484	179	516	726	453	574	79
RTOR Reduction (vph)	0	0	233	0	272	0	0	0	472	0	9	0
Lane Group Flow (vph)	337	79	167	474	265	0	179	516	254	453	644	0
Confl. Peds. (#/hr)												
Turn Type	Prot		Perm	Prot			Prot		Perm	Prot		
Protected Phases	7	4		3	8		5	2		1	6	
Permitted Phases		4	4		8			2	2		6	
Actuated Green, G (s)	23.8	26.0	26.0	19.0	21.2		16.2	22.8	22.8	31.8	38.4	
Effective Green, g (s)	24.2	26.9	26.9	19.4	22.1		16.6	23.8	23.8	32.2	39.4	
Actuated g/C Ratio	0.20	0.23	0.23	0.16	0.19		0.14	0.20	0.20	0.27	0.33	
Clearance Time (s)	4.4	4.9	4.9	4.4	4.9		4.4	5.0	5.0	4.4	5.0	
Vehicle Extension (s)	3.0	3.0	3.0	3.0	3.0		3.0	3.0	3.0	3.0	3.0	
Lane Grp Cap (vph)	362	424	408	563	301		450	712	318	482	1157	
v/s Ratio Prot	c0.19	0.04		0.14	c0.16		0.06	0.15		c0.26	0.19	
v/s Ratio Perm			0.09						c0.16			
v/c Ratio	0.93	0.19	0.41	0.84	0.88		0.40	0.72	0.80	0.94	0.56	
Uniform Delay, d1	46.2	36.9	38.9	48.0	46.8		46.3	44.2	45.0	42.1	32.3	
Progression Factor	1.00	1.00	1.00	1.00	1.00		1.00	1.00	1.00	1.00	1.00	
Incremental Delay, d2	30.2	0.2	0.7	11.0	23.9		2.6	3.7	13.1	26.3	0.6	
Delay (s)	76.4	37.1	39.6	58.9	70.7		48.9	47.9	58.0	68.4	32.9	
Level of Service	E	D	D	E	E		D	D	E	E	C	
Approach Delay (s)		54.6			65.2			53.2			47.4	
Approach LOS		D			E			D			D	

Intersection Summary			
HCM Average Control Delay	54.8	HCM Level of Service	D
HCM Volume to Capacity ratio	0.89		
Actuated Cycle Length (s)	118.3	Sum of lost time (s)	16.0
Intersection Capacity Utilization	99.5%	ICU Level of Service	F
Analysis Period (min)	15		
c Critical Lane Group			

Movement	EBL	EBT	EBR	WBL	WBT	WBR	NBL	NBT	NBR	SBL	SBT	SBR
Lane Configurations												
Ideal Flow (vphpl)	1900	1900	1900	1900	1900	1900	1900	1900	1900	1900	1900	1900
Lane Width	10	12	16	12	12	12	11	12	12	10	12	12
Total Lost time (s)		4.0			4.0		4.0	4.0		4.0	4.0	
Lane Util. Factor		1.00			1.00		1.00	0.95		1.00	0.95	
Frt		0.91			0.93		1.00	0.99		1.00	0.99	
Flt Protected		0.99			0.98		0.95	1.00		0.95	1.00	
Satd. Flow (prot)		1668			1695		1711	3490		1652	3513	
Flt Permitted		0.99			0.98		0.95	1.00		0.95	1.00	
Satd. Flow (perm)		1668			1695		1711	3490		1652	3513	
Volume (vph)	55	5	125	90	5	100	80	875	90	185	1130	60
Peak-hour factor, PHF	0.95	0.95	0.95	0.95	0.95	0.95	0.95	0.95	0.95	0.95	0.95	0.95
Adj. Flow (vph)	58	5	132	95	5	105	84	921	95	195	1189	63
RTOR Reduction (vph)	0	88	0	0	37	0	0	6	0	0	3	0
Lane Group Flow (vph)	0	107	0	0	168	0	84	1010	0	195	1249	0
Turn Type	Split			Split			Prot			Prot		
Protected Phases	4	4		3	3		5	2		1	6	
Permitted Phases												
Actuated Green, G (s)		12.5			12.3		4.6	33.4		6.1	35.0	
Effective Green, g (s)		12.5			12.3		4.6	34.7		6.1	36.2	
Actuated g/C Ratio		0.15			0.15		0.06	0.43		0.07	0.44	
Clearance Time (s)		4.0			4.0		4.0	5.3		4.0	5.2	
Vehicle Extension (s)		3.0			3.0		3.0	3.0		3.0	3.0	
Lane Grp Cap (vph)		256			255		96	1484		123	1558	
v/s Ratio Prot		c0.06			c0.10		0.05	0.29		c0.12	c0.36	
v/s Ratio Perm												
v/c Ratio		0.42			0.66		0.88	0.68		1.59	0.80	
Uniform Delay, d1		31.3			32.7		38.2	19.0		37.8	19.6	
Progression Factor		1.00			1.00		1.00	1.00		1.00	1.00	
Incremental Delay, d2		1.1			6.3		53.4	1.3		298.4	3.1	
Delay (s)		32.4			39.0		91.6	20.3		336.2	22.7	
Level of Service		C			D		F	C		F	C	
Approach Delay (s)		32.4			39.0			25.7			64.9	
Approach LOS		C			D			C			E	

Intersection Summary			
HCM Average Control Delay	46.3	HCM Level of Service	D
HCM Volume to Capacity ratio	0.75		
Actuated Cycle Length (s)	81.6	Sum of lost time (s)	12.0
Intersection Capacity Utilization	65.9%	ICU Level of Service	C
Analysis Period (min)	15		
c Critical Lane Group			

Movement	EBL	EBT	EBR	WBL	WBT	WBR	NBL	NBT	NBR	SBL	SBT	SBR
Lane Configurations												
Ideal Flow (vphpl)	1900	1900	1900	1900	1900	1900	1900	1900	1900	1900	1900	1900
Lane Width	12	12	12	16	12	16	12	16	12	12	16	11
Total Lost time (s)					4.0	4.0	4.0	4.0			4.0	
Lane Util. Factor					1.00	1.00	1.00	1.00			0.95	
Frpb, ped/bikes					1.00	1.00	1.00	1.00			1.00	
Flpb, ped/bikes					1.00	1.00	1.00	1.00			1.00	
Frt					1.00	0.85	1.00	1.00			0.93	
Flt Protected					0.95	1.00	0.95	1.00			1.00	
Satd. Flow (prot)					1770	1794	1770	2111			3730	
Flt Permitted					0.95	1.00	0.95	1.00			1.00	
Satd. Flow (perm)					1770	1794	1770	2111			3730	
Volume (vph)	0	0	0	50	0	765	85	650	0	0	790	695
Peak-hour factor, PHF	0.95	0.95	0.95	0.95	0.95	0.95	0.95	0.95	0.95	0.95	0.95	0.95
Adj. Flow (vph)	0	0	0	53	0	805	89	684	0	0	832	732
RTOR Reduction (vph)	0	0	0	0	0	106	0	0	0	0	175	0
Lane Group Flow (vph)	0	0	0	0	53	699	89	684	0	0	1389	0
Confl. Peds. (#/hr)												
Turn Type				Perm		Perm	Prot					
Protected Phases					6		3	8			4	
Permitted Phases				6		6						
Actuated Green, G (s)					35.4	35.4	5.0	43.8			34.3	
Effective Green, g (s)					35.9	35.9	5.5	44.3			34.8	
Actuated g/C Ratio					0.41	0.41	0.06	0.50			0.39	
Clearance Time (s)					4.5	4.5	4.5	4.5			4.5	
Vehicle Extension (s)					3.0	3.0	3.0	3.0			3.0	
Lane Grp Cap (vph)					720	730	110	1060			1472	
v/s Ratio Prot							0.05	c0.32			c0.37	
v/s Ratio Perm					0.03	c0.39						
v/c Ratio					0.07	0.96	0.81	0.65			0.94	
Uniform Delay, d1					16.0	25.4	40.8	16.2			25.8	
Progression Factor					1.00	1.00	1.00	1.00			1.00	
Incremental Delay, d2					0.0	23.2	33.8	1.4			12.4	
Delay (s)					16.0	48.7	74.7	17.5			38.2	
Level of Service					B	D	E	B			D	
Approach Delay (s)		0.0			46.6			24.1			38.2	
Approach LOS		A			D			C			D	

Intersection Summary			
HCM Average Control Delay	37.0	HCM Level of Service	D
HCM Volume to Capacity ratio	0.94		
Actuated Cycle Length (s)	88.2	Sum of lost time (s)	12.0
Intersection Capacity Utilization	126.7%	ICU Level of Service	H
Analysis Period (min)	15		
c Critical Lane Group			

Movement	EBL	EBT	EBR	WBL	WBT	WBR	NBL	NBT	NBR	SBL	SBT	SBR
Lane Configurations												
Ideal Flow (vphpl)	1900	1900	1900	1900	1900	1900	1900	1900	1900	1900	1900	1900
Lane Width	12	14	12	12	12	12	12	16	12	12	15	12
Total Lost time (s)		4.0	4.0					4.0		4.0	4.0	
Lane Util. Factor		1.00	1.00					1.00		1.00	1.00	
Frpb, ped/bikes		1.00	1.00					1.00		1.00	1.00	
Flpb, ped/bikes		1.00	1.00					1.00		1.00	1.00	
Frt		1.00	0.85					0.91		1.00	1.00	
Flt Protected		0.95	1.00					1.00		0.95	1.00	
Satd. Flow (prot)		1888	1583					1915		1770	2049	
Flt Permitted		0.95	1.00					1.00		0.95	1.00	
Satd. Flow (perm)		1888	1583					1915		1770	2049	
Volume (vph)	685	0	30	0	0	0	0	50	110	750	90	0
Peak-hour factor, PHF	0.95	0.95	0.95	0.95	0.95	0.95	0.95	0.95	0.95	0.95	0.95	0.95
Adj. Flow (vph)	721	0	32	0	0	0	0	53	116	789	95	0
RTOR Reduction (vph)	0	0	11	0	0	0	0	55	0	0	0	0
Lane Group Flow (vph)	0	721	21	0	0	0	0	114	0	789	95	0
Confl. Peds. (#/hr)												
Turn Type	Perm		Perm							Prot		
Protected Phases		4						2		1	6	
Permitted Phases	4		4									
Actuated Green, G (s)		53.0	53.0					13.5		62.9	80.6	
Effective Green, g (s)		54.0	54.0					14.8		63.1	81.9	
Actuated g/C Ratio		0.38	0.38					0.10		0.44	0.57	
Clearance Time (s)		5.0	5.0					5.3		4.2	5.3	
Vehicle Extension (s)		3.0	3.0					3.0		3.0	3.0	
Lane Grp Cap (vph)		708	594					197		776	1166	
v/s Ratio Prot								c0.06		c0.45	0.05	
v/s Ratio Perm		0.38	0.01									
v/c Ratio		1.02	0.03					0.58		1.02	0.08	
Uniform Delay, d1		45.0	28.5					61.6		40.4	14.0	
Progression Factor		1.00	1.00					1.00		1.00	1.00	
Incremental Delay, d2		38.5	0.0					4.3		36.6	0.0	
Delay (s)		83.5	28.5					65.9		77.0	14.0	
Level of Service		F	C					E		E	B	
Approach Delay (s)		81.1			0.0			65.9			70.2	
Approach LOS		F			A			E			E	

Intersection Summary			
HCM Average Control Delay	74.4	HCM Level of Service	E
HCM Volume to Capacity ratio	0.97		
Actuated Cycle Length (s)	143.9	Sum of lost time (s)	12.0
Intersection Capacity Utilization	126.7%	ICU Level of Service	H
Analysis Period (min)	15		
c Critical Lane Group			

Movement	EBL	EBT	EBR	WBL	WBT	WBR	NBL	NBT	NBR	SBL	SBT	SBR
Lane Configurations												
Ideal Flow (vphpl)	1900	1900	1900	1900	1900	1900	1900	1900	1900	1900	1900	1900
Lane Width	12	12	14	12	12	12	10	12	12	12	12	12
Total Lost time (s)	4.0	4.0	4.0	4.0	4.0	4.0	4.0	4.0		4.0	4.0	
Lane Util. Factor	0.97	1.00	1.00	0.97	0.95	1.00	0.97	0.91		0.97	0.91	
Frpb, ped/bikes	1.00	1.00	1.00	1.00	1.00	1.00	1.00	1.00		1.00	1.00	
Flpb, ped/bikes	1.00	1.00	1.00	1.00	1.00	1.00	1.00	1.00		1.00	1.00	
Frt	1.00	1.00	0.85	1.00	1.00	0.85	1.00	0.96		1.00	0.96	
Flt Protected	0.95	1.00	1.00	0.95	1.00	1.00	0.95	1.00		0.95	1.00	
Satd. Flow (prot)	3433	1863	1689	3433	3539	1583	3204	4868		3433	4896	
Flt Permitted	0.95	1.00	1.00	0.66	1.00	1.00	0.95	1.00		0.13	1.00	
Satd. Flow (perm)	3433	1863	1689	2384	3539	1583	3204	4868		457	4896	
Volume (vph)	370	145	360	625	200	320	285	1080	430	240	545	180
Peak-hour factor, PHF	0.95	0.95	0.95	0.95	0.95	0.95	0.95	0.95	0.95	0.95	0.95	0.95
Adj. Flow (vph)	389	153	379	658	211	337	300	1137	453	253	574	189
RTOR Reduction (vph)	0	0	172	0	0	84	0	42	0	0	40	0
Lane Group Flow (vph)	389	153	207	658	211	253	300	1548	0	253	723	0
Confl. Peds. (#/hr)												
Turn Type	Prot		pm+ov	Perm		Perm	Prot			Perm		
Protected Phases	5	2	3		6		3	8			4	
Permitted Phases			2	6		6				4		
Actuated Green, G (s)	11.6	50.9	60.5	35.0	35.0	35.0	9.6	88.7		74.7	74.7	
Effective Green, g (s)	12.0	52.0	62.0	36.0	36.0	36.0	10.0	90.0		76.0	76.0	
Actuated g/C Ratio	0.08	0.35	0.41	0.24	0.24	0.24	0.07	0.60		0.51	0.51	
Clearance Time (s)	4.4	5.1	4.4	5.0	5.0	5.0	4.4	5.3		5.3	5.3	
Vehicle Extension (s)	3.0	3.0	3.0	3.0	3.0	3.0	3.0	3.0		3.0	3.0	
Lane Grp Cap (vph)	275	646	743	572	849	380	214	2921		232	2481	
v/s Ratio Prot	c0.11	0.08	0.02		0.06		c0.09	0.32			0.15	
v/s Ratio Perm			0.10	c0.28		0.16				c0.55		
v/c Ratio	1.41	0.24	0.28	1.15	0.25	0.67	1.40	0.53		1.09	0.29	
Uniform Delay, d1	69.0	34.9	29.2	57.0	46.1	51.6	70.0	17.6		37.0	21.4	
Progression Factor	1.00	1.00	1.00	1.00	1.00	1.00	1.00	1.00		1.00	1.00	
Incremental Delay, d2	206.7	0.2	0.2	86.5	0.2	4.4	206.5	0.2		85.3	0.1	
Delay (s)	275.7	35.1	29.4	143.5	46.2	56.0	276.5	17.8		122.3	21.5	
Level of Service	F	D	C	F	D	E	F	B		F	C	
Approach Delay (s)		134.4			102.0			58.8			46.6	
Approach LOS		F			F			E			D	

Intersection Summary			
HCM Average Control Delay	80.5	HCM Level of Service	F
HCM Volume to Capacity ratio	1.16		
Actuated Cycle Length (s)	150.0	Sum of lost time (s)	16.0
Intersection Capacity Utilization	76.1%	ICU Level of Service	D
Analysis Period (min)	15		
c Critical Lane Group			

Movement	EBL	EBT	EBR	WBL	WBT	WBR	NBL	NBT	NBR	SBL	SBT	SBR
Lane Configurations												
Ideal Flow (vphpl)	1900	1900	1900	1900	1900	1900	1900	1900	1900	1900	1900	1900
Total Lost time (s)	4.0	4.0		4.0	4.0			4.0		4.0	4.0	
Lane Util. Factor	1.00	0.95		1.00	0.95			1.00		1.00	1.00	
Frt	1.00	1.00		1.00	0.99			0.98		1.00	0.85	
Flt Protected	0.95	1.00		0.95	1.00			0.97		0.95	1.00	
Satd. Flow (prot)	1770	3526		1770	3521			1759		1770	1593	
Flt Permitted	0.28	1.00		0.34	1.00			0.73		0.66	1.00	
Satd. Flow (perm)	524	3526		639	3521			1330		1221	1593	
Volume (vph)	45	600	15	10	710	25	111	26	30	170	5	140
Peak-hour factor, PHF	0.95	0.95	0.95	0.95	0.95	0.95	0.95	0.95	0.95	0.95	0.95	0.95
Adj. Flow (vph)	47	632	16	11	747	26	117	27	32	179	5	147
RTOR Reduction (vph)	0	2	0	0	3	0	0	9	0	0	84	0
Lane Group Flow (vph)	47	646	0	11	770	0	0	167	0	179	68	0
Turn Type	Perm			Perm			Perm			Perm		
Protected Phases		4			8			2			6	
Permitted Phases	4			8			2			6		
Actuated Green, G (s)	43.4	43.4		43.4	43.4			37.6		37.6	37.6	
Effective Green, g (s)	43.9	43.9		43.9	43.9			38.1		38.1	38.1	
Actuated g/C Ratio	0.49	0.49		0.49	0.49			0.42		0.42	0.42	
Clearance Time (s)	4.5	4.5		4.5	4.5			4.5		4.5	4.5	
Lane Grp Cap (vph)	256	1720		312	1717			563		517	674	
v/s Ratio Prot		0.18			c0.22						0.04	
v/s Ratio Perm	0.09			0.02				0.13		c0.15		
v/c Ratio	0.18	0.38		0.04	0.45			0.30		0.35	0.10	
Uniform Delay, d1	13.0	14.5		12.0	15.1			17.1		17.5	15.6	
Progression Factor	1.00	1.00		1.00	1.00			1.00		1.00	1.00	
Incremental Delay, d2	1.6	0.6		0.2	0.9			1.3		1.8	0.3	
Delay (s)	14.5	15.1		12.2	16.0			18.5		19.4	15.9	
Level of Service	B	B		B	B			B		B	B	
Approach Delay (s)		15.0			15.9			18.5			17.8	
Approach LOS		B			B			B			B	

Intersection Summary			
HCM Average Control Delay	16.1	HCM Level of Service	B
HCM Volume to Capacity ratio	0.40		
Actuated Cycle Length (s)	90.0	Sum of lost time (s)	8.0
Intersection Capacity Utilization	55.8%	ICU Level of Service	B
Analysis Period (min)	15		
c Critical Lane Group			

Movement	EBT	EBR	WBL	WBT	NBL	NBR
Lane Configurations						
Ideal Flow (vphpl)	1900	1900	1900	1900	1900	1900
Total Lost time (s)	4.0			4.0	4.0	4.0
Lane Util. Factor	1.00			1.00	1.00	1.00
Frt	0.89			1.00	1.00	0.85
Flt Protected	1.00			0.98	0.95	1.00
Satd. Flow (prot)	1662			1817	1770	1583
Flt Permitted	1.00			0.92	0.95	1.00
Satd. Flow (perm)	1662			1706	1770	1583
Volume (vph)	15	60	10	10	65	25
Peak-hour factor, PHF	0.95	0.95	0.95	0.95	0.95	0.95
Adj. Flow (vph)	16	63	11	11	68	26
RTOR Reduction (vph)	34	0	0	0	0	14
Lane Group Flow (vph)	45	0	0	22	68	12
Turn Type			Perm			Perm
Protected Phases	4			8	2	
Permitted Phases			8			2
Actuated Green, G (s)	41.0			41.0	40.0	40.0
Effective Green, g (s)	41.5			41.5	40.5	40.5
Actuated g/C Ratio	0.46			0.46	0.45	0.45
Clearance Time (s)	4.5			4.5	4.5	4.5
Lane Grp Cap (vph)	766			787	797	712
v/s Ratio Prot	c0.03				c0.04	
v/s Ratio Perm				0.01		0.01
v/c Ratio	0.06			0.03	0.09	0.02
Uniform Delay, d1	13.4			13.2	14.2	13.7
Progression Factor	2.00			1.00	1.00	1.00
Incremental Delay, d2	0.1			0.1	0.2	0.0
Delay (s)	26.9			13.3	14.4	13.8
Level of Service	C			B	B	B
Approach Delay (s)	26.9			13.3	14.2	
Approach LOS	C			B	B	

Intersection Summary			
HCM Average Control Delay	19.3	HCM Level of Service	B
HCM Volume to Capacity ratio	0.07		
Actuated Cycle Length (s)	90.0	Sum of lost time (s)	8.0
Intersection Capacity Utilization	18.0%	ICU Level of Service	A
Analysis Period (min)	15		
c Critical Lane Group			

Movement	EBL	EBT	EBR	WBL	WBT	WBR	NBL	NBT	NBR	SBL	SBT	SBR
Lane Configurations												
Ideal Flow (vphpl)	1900	1900	1900	1900	1900	1900	1900	1900	1900	1900	1900	1900
Total Lost time (s)	4.0	4.0		4.0	4.0		4.0	4.0		4.0	4.0	
Lane Util. Factor	1.00	0.95		1.00	0.95		1.00	1.00		1.00	1.00	
Frt	1.00	0.98		1.00	0.92		1.00	0.94		1.00	0.91	
Flt Protected	0.95	1.00		0.95	1.00		0.95	1.00		0.95	1.00	
Satd. Flow (prot)	1770	3456		1770	3268		1770	1759		1770	1703	
Flt Permitted	0.27	1.00		0.37	1.00		0.40	1.00		0.57	1.00	
Satd. Flow (perm)	502	3456		680	3268		749	1759		1054	1703	
Volume (vph)	260	535	100	175	415	435	45	110	65	255	120	160
Peak-hour factor, PHF	0.95	0.95	0.95	0.95	0.95	0.95	0.95	0.95	0.95	0.95	0.95	0.95
Adj. Flow (vph)	274	563	105	184	437	458	47	116	68	268	126	168
RTOR Reduction (vph)	0	17	0	0	178	0	0	23	0	0	53	0
Lane Group Flow (vph)	274	651	0	184	717	0	47	161	0	268	241	0
Turn Type	Perm			Perm			Perm			Perm		
Protected Phases		4			8			2			6	
Permitted Phases	4			8			2			6		
Actuated Green, G (s)	54.5	54.5		54.5	54.5		26.5	26.5		26.5	26.5	
Effective Green, g (s)	55.0	55.0		55.0	55.0		27.0	27.0		27.0	27.0	
Actuated g/C Ratio	0.61	0.61		0.61	0.61		0.30	0.30		0.30	0.30	
Clearance Time (s)	4.5	4.5		4.5	4.5		4.5	4.5		4.5	4.5	
Lane Grp Cap (vph)	307	2112		416	1997		225	528		316	511	
v/s Ratio Prot		0.19			0.22			0.09			0.14	
v/s Ratio Perm	c0.55			0.27			0.06			c0.25		
v/c Ratio	0.89	0.31		0.44	0.36		0.21	0.30		0.85	0.47	
Uniform Delay, d1	15.0	8.4		9.3	8.7		23.5	24.3		29.6	25.7	
Progression Factor	1.00	1.00		0.59	0.37		1.00	1.00		1.00	0.99	
Incremental Delay, d2	30.0	0.4		2.7	0.4		2.1	1.5		23.6	3.1	
Delay (s)	45.0	8.8		8.2	3.6		25.6	25.8		53.1	28.5	
Level of Service	D	A		A	A		C	C		D	C	
Approach Delay (s)		19.3			4.4			25.7			40.2	
Approach LOS		B			A			C			D	

Intersection Summary			
HCM Average Control Delay	18.3	HCM Level of Service	B
HCM Volume to Capacity ratio	0.88		
Actuated Cycle Length (s)	90.0	Sum of lost time (s)	8.0
Intersection Capacity Utilization	77.1%	ICU Level of Service	D
Analysis Period (min)	15		

c Critical Lane Group

Movement	EBT	EBR	WBL	WBT	NBL	NBR
Lane Configurations						
Ideal Flow (vphpl)	1900	1900	1900	1900	1900	1900
Total Lost time (s)	4.0		4.0	4.0	4.0	4.0
Lane Util. Factor	0.95		1.00	0.95	1.00	1.00
Frt	0.97		1.00	1.00	1.00	0.85
Flt Protected	1.00		0.95	1.00	0.95	1.00
Satd. Flow (prot)	3430		1770	3539	1770	1583
Flt Permitted	1.00		0.26	1.00	0.95	1.00
Satd. Flow (perm)	3430		488	3539	1770	1583
Volume (vph)	690	180	290	530	495	200
Peak-hour factor, PHF	0.95	0.95	0.95	0.95	0.95	0.95
Adj. Flow (vph)	726	189	305	558	521	211
RTOR Reduction (vph)	26	0	0	0	0	148
Lane Group Flow (vph)	889	0	305	558	521	63
Turn Type			Perm			Perm
Protected Phases	4			8	2	
Permitted Phases			8			2
Actuated Green, G (s)	54.5		54.5	54.5	26.5	26.5
Effective Green, g (s)	55.0		55.0	55.0	27.0	27.0
Actuated g/C Ratio	0.61		0.61	0.61	0.30	0.30
Clearance Time (s)	4.5		4.5	4.5	4.5	4.5
Lane Grp Cap (vph)	2096		298	2163	531	475
v/s Ratio Prot	0.26			0.16	c0.29	
v/s Ratio Perm			c0.62			0.04
v/c Ratio	0.42		1.02	0.26	0.98	0.13
Uniform Delay, d1	9.2		17.5	8.1	31.2	23.0
Progression Factor	0.73		1.04	1.03	1.00	1.00
Incremental Delay, d2	0.6		52.4	0.2	34.7	0.6
Delay (s)	7.3		70.6	8.5	65.9	23.6
Level of Service	A		E	A	E	C
Approach Delay (s)	7.3			30.5	53.7	
Approach LOS	A			C	D	

Intersection Summary			
HCM Average Control Delay	28.8	HCM Level of Service	C
HCM Volume to Capacity ratio	1.01		
Actuated Cycle Length (s)	90.0	Sum of lost time (s)	8.0
Intersection Capacity Utilization	78.3%	ICU Level of Service	D
Analysis Period (min)	15		

c Critical Lane Group

Movement	EBL	EBT	EBR	WBL	WBT	WBR	NBL	NBT	NBR	SBL	SBT	SBR
Lane Configurations												
Ideal Flow (vphpl)	1900	1900	1900	1900	1900	1900	1900	1900	1900	1900	1900	1900
Total Lost time (s)		4.0	4.0	4.0	4.0		4.0	4.0	4.0	4.0	4.0	
Lane Util. Factor		1.00	1.00	1.00	1.00		0.97	0.91	1.00	1.00	0.95	
Frt		1.00	0.85	1.00	0.86		1.00	1.00	0.85	1.00	0.99	
Flt Protected		0.96	1.00	0.95	1.00		0.95	1.00	1.00	0.95	1.00	
Satd. Flow (prot)		1791	1583	1770	1606		3433	5085	1583	1770	3501	
Flt Permitted		0.61	1.00	0.55	1.00		0.19	1.00	1.00	0.21	1.00	
Satd. Flow (perm)		1133	1583	1034	1606		688	5085	1583	384	3501	
Volume (vph)	125	30	460	215	10	120	395	1105	245	145	1030	80
Peak-hour factor, PHF	0.95	0.95	0.95	0.95	0.95	0.95	0.95	0.95	0.95	0.95	0.95	0.95
Adj. Flow (vph)	132	32	484	226	11	126	416	1163	258	153	1084	84
RTOR Reduction (vph)	0	0	92	0	78	0	0	0	87	0	5	0
Lane Group Flow (vph)	0	164	392	226	59	0	416	1163	171	153	1163	0
Turn Type	Perm		Perm	Perm			Perm		Perm	Perm		
Protected Phases		4			8			2			6	
Permitted Phases	4		4	8			2		2	6		
Actuated Green, G (s)		33.5	33.5	33.5	33.5		82.5	82.5	82.5	82.5	82.5	
Effective Green, g (s)		34.0	34.0	34.0	34.0		83.0	83.0	83.0	83.0	83.0	
Actuated g/C Ratio		0.27	0.27	0.27	0.27		0.66	0.66	0.66	0.66	0.66	
Clearance Time (s)		4.5	4.5	4.5	4.5		4.5	4.5	4.5	4.5	4.5	
Lane Grp Cap (vph)		308	431	281	437		457	3376	1051	255	2325	
v/s Ratio Prot					0.04			0.23			0.33	
v/s Ratio Perm		0.14	c0.25	0.22			c0.60		0.11	0.40		
v/c Ratio		0.53	0.91	0.80	0.14		0.91	0.34	0.16	0.60	0.50	
Uniform Delay, d1		38.7	44.0	42.4	34.4		17.8	9.1	7.9	11.7	10.6	
Progression Factor		1.00	1.00	1.00	1.00		1.00	1.00	1.00	1.00	1.00	
Incremental Delay, d2		6.5	25.8	21.2	0.6		24.8	0.3	0.3	10.0	0.8	
Delay (s)		45.2	69.8	63.6	35.0		42.6	9.4	8.2	21.8	11.3	
Level of Service		D	E	E	D		D	A	A	C	B	
Approach Delay (s)		63.6			52.8			16.8			12.5	
Approach LOS		E			D			B			B	

Intersection Summary			
HCM Average Control Delay	25.9	HCM Level of Service	C
HCM Volume to Capacity ratio	0.91		
Actuated Cycle Length (s)	125.0	Sum of lost time (s)	8.0
Intersection Capacity Utilization	81.4%	ICU Level of Service	D
Analysis Period (min)	15		

c Critical Lane Group

Movement	EBL	EBT	EBR	WBL	WBT	WBR	NBL	NBT	NBR	SBL	SBT	SBR
Lane Configurations												
Ideal Flow (vphpl)	1900	1900	1900	1900	1900	1900	1900	1900	1900	1900	1900	1900
Total Lost time (s)		4.0		4.0	4.0		4.0	4.0	4.0	4.0	4.0	
Lane Util. Factor		1.00		0.95	0.95		1.00	0.95	1.00	1.00	0.95	
Frt		0.93		1.00	0.85		1.00	1.00	0.85	1.00	0.99	
Flt Protected		0.98		0.95	1.00		0.95	1.00	1.00	0.95	1.00	
Satd. Flow (prot)		1695		1681	1504		1770	3539	1583	1770	3519	
Flt Permitted		0.88		0.72	1.00		0.20	1.00	1.00	0.16	1.00	
Satd. Flow (perm)		1523		1267	1504		374	3539	1583	289	3519	
Volume (vph)	35	0	35	20	0	15	25	1190	55	20	995	40
Peak-hour factor, PHF	0.95	0.95	0.95	0.95	0.95	0.95	0.95	0.95	0.95	0.95	0.95	0.95
Adj. Flow (vph)	37	0	37	21	0	16	26	1253	58	21	1047	42
RTOR Reduction (vph)	0	25	0	0	11	0	0	0	22	0	2	0
Lane Group Flow (vph)	0	49	0	21	5	0	26	1253	36	21	1087	0
Turn Type	Perm			Perm			Perm		Perm	Perm		
Protected Phases		4			8			2			6	
Permitted Phases	4			8			2		2	6		
Actuated Green, G (s)		39.0		39.0	39.0		77.0	77.0	77.0	77.0	77.0	
Effective Green, g (s)		39.5		39.5	39.5		77.5	77.5	77.5	77.5	77.5	
Actuated g/C Ratio		0.32		0.32	0.32		0.62	0.62	0.62	0.62	0.62	
Clearance Time (s)		4.5		4.5	4.5		4.5	4.5	4.5	4.5	4.5	
Lane Grp Cap (vph)		481		400	475		232	2194	981	179	2182	
v/s Ratio Prot								c0.35			0.31	
v/s Ratio Perm		c0.03		0.02	0.00		0.07		0.02	0.07		
v/c Ratio		0.10		0.05	0.01		0.11	0.57	0.04	0.12	0.50	
Uniform Delay, d1		30.2		29.7	29.3		9.7	14.0	9.2	9.7	13.1	
Progression Factor		1.00		1.00	1.00		1.00	1.00	1.00	1.00	1.00	
Incremental Delay, d2		0.4		0.2	0.0		1.0	1.1	0.1	1.3	0.8	
Delay (s)		30.6		30.0	29.4		10.7	15.1	9.3	11.1	13.9	
Level of Service		C		C	C		B	B	A	B	B	
Approach Delay (s)		30.6			29.7			14.7			13.8	
Approach LOS		C			C			B			B	

Intersection Summary			
HCM Average Control Delay	15.0	HCM Level of Service	B
HCM Volume to Capacity ratio	0.41		
Actuated Cycle Length (s)	125.0	Sum of lost time (s)	8.0
Intersection Capacity Utilization	50.3%	ICU Level of Service	A
Analysis Period (min)	15		

c Critical Lane Group

Movement	EBL	EBT	EBR	WBL	WBT	WBR	NBL	NBT	NBR	SBL	SBT	SBR
Lane Configurations												
Ideal Flow (vphpl)	1900	1900	1900	1900	1900	1900	1900	1900	1900	1900	1900	1900
Total Lost time (s)		4.0			4.0		4.0	4.0		4.0	4.0	
Lane Util. Factor		1.00			1.00		1.00	1.00		1.00	1.00	
Frt		0.90			0.99		1.00	1.00		1.00	1.00	
Flt Protected		0.99			0.96		0.95	1.00		0.95	1.00	
Satd. Flow (prot)		1659			1767		1770	1854		1770	1861	
Flt Permitted		0.96			0.75		0.24	1.00		0.24	1.00	
Satd. Flow (perm)		1603			1388		454	1854		438	1861	
Volume (vph)	20	10	95	40	5	5	50	730	25	15	735	5
Peak-hour factor, PHF	0.95	0.95	0.95	0.95	0.95	0.95	0.95	0.95	0.95	0.95	0.95	0.95
Adj. Flow (vph)	21	11	100	42	5	5	53	768	26	16	774	5
RTOR Reduction (vph)	0	74	0	0	4	0	0	1	0	0	0	0
Lane Group Flow (vph)	0	58	0	0	48	0	53	793	0	16	779	0
Turn Type	Perm			Perm			Perm			Perm		
Protected Phases		4			8			2			6	
Permitted Phases	4			8			2			6		
Actuated Green, G (s)		23.0			23.0		58.0	58.0		58.0	58.0	
Effective Green, g (s)		23.5			23.5		58.5	58.5		58.5	58.5	
Actuated g/C Ratio		0.26			0.26		0.65	0.65		0.65	0.65	
Clearance Time (s)		4.5			4.5		4.5	4.5		4.5	4.5	
Lane Grp Cap (vph)		419			362		295	1205		285	1210	
v/s Ratio Prot								c0.43			0.42	
v/s Ratio Perm		c0.04			0.03		0.12			0.04		
v/c Ratio		0.14			0.13		0.18	0.66		0.06	0.64	
Uniform Delay, d1		25.5			25.5		6.2	9.6		5.7	9.5	
Progression Factor		1.00			1.00		1.00	1.00		1.00	1.00	
Incremental Delay, d2		0.7			0.8		1.3	2.8		0.4	2.6	
Delay (s)		26.2			26.2		7.6	12.4		6.1	12.1	
Level of Service		C			C		A	B		A	B	
Approach Delay (s)		26.2			26.2			12.1			12.0	
Approach LOS		C			C			B			B	

Intersection Summary			
HCM Average Control Delay	13.5	HCM Level of Service	B
HCM Volume to Capacity ratio	0.51		
Actuated Cycle Length (s)	90.0	Sum of lost time (s)	8.0
Intersection Capacity Utilization	57.7%	ICU Level of Service	B
Analysis Period (min)	15		

c Critical Lane Group

Movement	EBL	EBT	EBR	WBL	WBT	WBR	NBL	NBT	NBR	SBL	SBT	SBR
Lane Configurations												
Ideal Flow (vphpl)	1900	1900	1900	1900	1900	1900	1900	1900	1900	1900	1900	1900
Total Lost time (s)	4.0	4.0	4.0		4.0		4.0	4.0		4.0	4.0	
Lane Util. Factor	1.00	1.00	1.00		1.00		1.00	1.00		1.00	1.00	
Frt	1.00	1.00	0.85		0.96		1.00	0.98		1.00	0.91	
Flt Protected	0.95	1.00	1.00		0.99		0.95	1.00		0.95	1.00	
Satd. Flow (prot)	1770	1863	1583		1781		1770	1830		1770	1693	
Flt Permitted	0.51	1.00	1.00		0.95		0.07	1.00		0.58	1.00	
Satd. Flow (perm)	951	1863	1583		1709		122	1830		1079	1693	
Volume (vph)	240	180	245	20	105	50	95	230	30	80	450	700
Peak-hour factor, PHF	0.95	0.95	0.95	0.95	0.95	0.95	0.95	0.95	0.95	0.95	0.95	0.95
Adj. Flow (vph)	253	189	258	21	111	53	100	242	32	84	474	737
RTOR Reduction (vph)	0	0	198	0	16	0	0	5	0	0	62	0
Lane Group Flow (vph)	253	189	60	0	169	0	100	269	0	84	1149	0
Turn Type	Perm		Perm	Perm			Perm			Perm		
Protected Phases		4			8			2			6	
Permitted Phases	4		4	8			2			6		
Actuated Green, G (s)	20.5	20.5	20.5		20.5		60.5	60.5		60.5	60.5	
Effective Green, g (s)	21.0	21.0	21.0		21.0		61.0	61.0		61.0	61.0	
Actuated g/C Ratio	0.23	0.23	0.23		0.23		0.68	0.68		0.68	0.68	
Clearance Time (s)	4.5	4.5	4.5		4.5		4.5	4.5		4.5	4.5	
Lane Grp Cap (vph)	222	435	369		399		83	1240		731	1147	
v/s Ratio Prot		0.10						0.15			0.68	
v/s Ratio Perm	c0.27		0.04		0.10		c0.82			0.08		
v/c Ratio	1.14	0.43	0.16		0.42		1.20	0.22		0.11	1.00	
Uniform Delay, d1	34.5	29.4	27.5		29.3		14.5	5.5		5.1	14.5	
Progression Factor	1.00	1.00	1.00		1.00		1.00	1.00		1.00	1.00	
Incremental Delay, d2	103.1	3.1	0.9		3.3		163.9	0.4		0.3	27.0	
Delay (s)	137.6	32.6	28.4		32.6		178.4	5.9		5.4	41.5	
Level of Service	F	C	C		C		F	A		A	D	
Approach Delay (s)		69.0			32.6			52.0			39.1	
Approach LOS		E			C			D			D	

Intersection Summary			
HCM Average Control Delay	48.7	HCM Level of Service	D
HCM Volume to Capacity ratio	1.19		
Actuated Cycle Length (s)	90.0	Sum of lost time (s)	8.0
Intersection Capacity Utilization	108.2%	ICU Level of Service	G
Analysis Period (min)	15		

c Critical Lane Group

Movement	EBL	EBT	EBR	WBL	WBT	WBR	NBL	NBT	NBR	SBL	SBT	SBR
Lane Configurations												
Ideal Flow (vphpl)	1900	1900	1900	1900	1900	1900	1900	1900	1900	1900	1900	1900
Total Lost time (s)	4.0	4.0	4.0	4.0	4.0		4.0	4.0	4.0	4.0	4.0	
Lane Util. Factor	1.00	0.95	1.00	1.00	0.95		0.95	0.95	1.00	1.00	1.00	
Frt	1.00	1.00	0.85	1.00	0.94		1.00	1.00	0.85	1.00	0.98	
Flt Protected	0.95	1.00	1.00	0.95	1.00		0.95	0.97	1.00	0.95	1.00	
Satd. Flow (prot)	1770	3539	1583	1770	3327		1681	1708	1583	1770	1825	
Flt Permitted	0.49	1.00	1.00	0.20	1.00		0.49	0.52	1.00	0.48	1.00	
Satd. Flow (perm)	916	3539	1583	369	3327		874	918	1583	890	1825	
Volume (vph)	60	1120	490	270	255	170	265	50	265	180	160	25
Peak-hour factor, PHF	0.95	0.95	0.95	0.95	0.95	0.95	0.95	0.95	0.95	0.95	0.95	0.95
Adj. Flow (vph)	63	1179	516	284	268	179	279	53	279	189	168	26
RTOR Reduction (vph)	0	0	128	0	56	0	0	0	88	0	6	0
Lane Group Flow (vph)	63	1179	388	284	391	0	140	192	191	189	188	0
Turn Type	Perm		Perm	Perm			Perm		Perm	Perm		
Protected Phases		4			8			2			6	
Permitted Phases	4		4	8			2		2	6		
Actuated Green, G (s)	61.5	61.5	61.5	61.5	61.5		19.5	19.5	19.5	19.5	19.5	
Effective Green, g (s)	62.0	62.0	62.0	62.0	62.0		20.0	20.0	20.0	20.0	20.0	
Actuated g/C Ratio	0.69	0.69	0.69	0.69	0.69		0.22	0.22	0.22	0.22	0.22	
Clearance Time (s)	4.5	4.5	4.5	4.5	4.5		4.5	4.5	4.5	4.5	4.5	
Vehicle Extension (s)	3.0	3.0	3.0	3.0	3.0		3.0	3.0	3.0	3.0	3.0	
Lane Grp Cap (vph)	631	2438	1091	254	2292		194	204	352	198	406	
v/s Ratio Prot		0.33			0.12						0.10	
v/s Ratio Perm	0.07		0.24	c0.77			0.16	0.21	0.12	c0.21		
v/c Ratio	0.10	0.48	0.36	1.12	0.17		0.72	0.94	0.54	0.95	0.46	
Uniform Delay, d1	4.7	6.5	5.8	14.0	4.9		32.4	34.4	31.0	34.6	30.3	
Progression Factor	1.00	1.00	1.00	1.00	1.00		1.00	1.00	1.00	1.00	1.00	
Incremental Delay, d2	0.1	0.2	0.2	91.9	0.0		12.4	46.4	1.7	50.6	0.8	
Delay (s)	4.7	6.7	6.0	105.9	5.0		44.9	80.8	32.7	85.1	31.2	
Level of Service	A	A	A	F	A		D	F	C	F	C	
Approach Delay (s)		6.4			44.2			50.6			57.8	
Approach LOS		A			D			D			E	

Intersection Summary			
HCM Average Control Delay	27.7	HCM Level of Service	C
HCM Volume to Capacity ratio	1.08		
Actuated Cycle Length (s)	90.0	Sum of lost time (s)	8.0
Intersection Capacity Utilization	77.9%	ICU Level of Service	D
Analysis Period (min)	15		

c Critical Lane Group

APPENDIX J

PEAK HOUR INTERSECTION AND ARTERIAL ANALYSIS WORKSHEETS
LONG TERM (2035) WITH CONNECTION CONDITIONS

2035 W/ Project AM
4: Friars Rd EB Ramps & Mission Center Rd 1/15/2015

Movement	EBL	EBT	EBR	WBL	WBT	WBR	NBL	NBT	NBR	SBL	SBT	SBR
Lane Configurations												
Ideal Flow (vphpl)	1900	1900	1900	1900	1900	1900	1900	1900	1900	1900	1900	1900
Lane Width	14	12	13	12	12	12	12	13	12	15	16	12
Total Lost time (s)	4.0	4.0	4.0					4.0		4.0	4.0	
Lane Util. Factor	0.95	0.95	1.00					0.95		0.97	0.95	
Frpb, ped/bikes	1.00	1.00	1.00					1.00		1.00	1.00	
Flpb, ped/bikes	1.00	1.00	1.00					1.00		1.00	1.00	
Frt	1.00	1.00	0.85					0.98		1.00	1.00	
Flt Protected	0.95	0.95	1.00					1.00		0.95	1.00	
Satd. Flow (prot)	1793	1681	1636					3568		3776	4011	
Flt Permitted	0.95	0.95	1.00					1.00		0.95	1.00	
Satd. Flow (perm)	1793	1681	1636					3568		3776	4011	
Volume (vph)	255	0	175	0	0	0	0	590	115	340	455	0
Peak-hour factor, PHF	0.95	0.95	0.95	0.95	0.95	0.95	0.95	0.95	0.95	0.95	0.95	0.95
Adj. Flow (vph)	268	0	184	0	0	0	0	621	121	358	479	0
RTOR Reduction (vph)	0	0	152	0	0	0	0	16	0	0	0	0
Lane Group Flow (vph)	135	133	32	0	0	0	0	726	0	358	479	0
Confl. Peds. (#/hr)												
Turn Type	Split		Perm							Prot		
Protected Phases	4	4						2		1	6	
Permitted Phases			4									
Actuated Green, G (s)	7.2	7.2	7.2					17.5		7.5	28.8	
Effective Green, g (s)	8.1	8.1	8.1					18.5		7.9	30.4	
Actuated g/C Ratio	0.17	0.17	0.17					0.40		0.17	0.65	
Clearance Time (s)	4.9	4.9	4.9					5.0		4.4	5.6	
Vehicle Extension (s)	3.0	3.0	3.0					3.0		3.0	3.0	
Lane Grp Cap (vph)	312	293	285					1420		642	2622	
v/s Ratio Prot	0.08	c0.08						c0.20		c0.09	0.12	
v/s Ratio Perm			0.02									
v/c Ratio	0.43	0.45	0.11					0.51		0.56	0.18	
Uniform Delay, d1	17.1	17.2	16.2					10.6		17.7	3.2	
Progression Factor	1.00	1.00	1.00					1.00		1.00	1.00	
Incremental Delay, d2	1.0	1.1	0.2					0.3		1.1	0.0	
Delay (s)	18.1	18.3	16.3					10.9		18.8	3.2	
Level of Service	B	B	B					B		B	A	
Approach Delay (s)		17.5			0.0			10.9			9.9	
Approach LOS		B			A			B			A	

Intersection Summary				
HCM Average Control Delay	11.9	HCM Level of Service	B	
HCM Volume to Capacity ratio	0.51			
Actuated Cycle Length (s)	46.5	Sum of lost time (s)	12.0	
Intersection Capacity Utilization	46.7%	ICU Level of Service	A	
Analysis Period (min)	15			
c Critical Lane Group				

2035 W/ Project AM
5: Friars Rd WB Ramps & Mission Center Rd 1/15/2015

Movement	EBL	EBT	EBR	WBL	WBT	WBR	NBL	NBT	NBR	SBL	SBT	SBR
Lane Configurations												
Ideal Flow (vphpl)	1900	1900	1900	1900	1900	1900	1900	1900	1900	1900	1900	1900
Lane Width	12	12	12	15	12	15	10	12	12	12	14	11
Total Lost time (s)				4.0	4.0	4.0	4.0	4.0			4.0	4.0
Lane Util. Factor				0.95	0.95	1.00	0.97	0.95			0.95	1.00
Frpb, ped/bikes				1.00	1.00	1.00	1.00	1.00			1.00	1.00
Flpb, ped/bikes				1.00	1.00	1.00	1.00	1.00			1.00	1.00
Frt				1.00	1.00	0.85	1.00	1.00			1.00	0.85
Flt Protected				0.95	0.95	1.00	0.95	1.00			1.00	1.00
Satd. Flow (prot)				1849	1681	1742	3204	3539			3775	1531
Flt Permitted				0.95	0.95	1.00	0.95	1.00			1.00	1.00
Satd. Flow (perm)				1849	1681	1742	3204	3539			3775	1531
Volume (vph)	0	0	0	175	0	310	155	695	0	0	620	345
Peak-hour factor, PHF	0.95	0.95	0.95	0.95	0.95	0.95	0.95	0.95	0.95	0.95	0.95	0.95
Adj. Flow (vph)	0	0	0	184	0	326	163	732	0	0	653	363
RTOR Reduction (vph)	0	0	0	0	0	137	0	0	0	0	0	218
Lane Group Flow (vph)	0	0	0	94	90	189	163	732	0	0	653	145
Confl. Peds. (#/hr)												
Turn Type				Split		Perm	Prot					Perm
Protected Phases				8	8		5	2			6	
Permitted Phases						8						6
Actuated Green, G (s)				9.4	9.4	9.4	6.1	28.7			17.2	17.2
Effective Green, g (s)				10.3	10.3	10.3	6.5	29.7			19.2	19.2
Actuated g/C Ratio				0.21	0.21	0.21	0.14	0.62			0.40	0.40
Clearance Time (s)				4.9	4.9	4.9	4.4	5.0			6.0	6.0
Vehicle Extension (s)				3.0	3.0	3.0	3.0	3.0			3.0	3.0
Lane Grp Cap (vph)				397	361	374	434	2190			1510	612
v/s Ratio Prot				0.05	0.05		0.05	c0.21			c0.17	
v/s Ratio Perm						c0.11						0.09
v/c Ratio				0.24	0.25	0.51	0.38	0.33			0.43	0.24
Uniform Delay, d1				15.6	15.6	16.6	18.9	4.4			10.4	9.5
Progression Factor				1.00	1.00	1.00	1.00	1.00			1.00	1.00
Incremental Delay, d2				0.3	0.4	1.1	0.5	0.1			0.2	0.2
Delay (s)				15.9	16.0	17.7	19.4	4.5			10.6	9.7
Level of Service				B	B	B	B	A			B	A
Approach Delay (s)		0.0			17.1			7.2			10.3	
Approach LOS		A			B			A			B	

Intersection Summary				
HCM Average Control Delay	10.6	HCM Level of Service	B	
HCM Volume to Capacity ratio	0.45			
Actuated Cycle Length (s)	48.0	Sum of lost time (s)	12.0	
Intersection Capacity Utilization	46.7%	ICU Level of Service	A	
Analysis Period (min)	15			
c Critical Lane Group				

2035 W/ Project AM
7: Friars Rd EB Ramps & Qualcomm Wy 1/15/2015

Movement	EBL	EBT	EBR	WBL	WBT	WBR	NBL	NBT	NBR	SBL	SBT	SBR
Lane Configurations												
Ideal Flow (vphpl)	1900	1900	1900	1900	1900	1900	1900	1900	1900	1900	1900	1900
Lane Width	12	11	14	12	12	12	12	12	15	12	12	12
Total Lost time (s)		4.0	4.0					4.0	4.0	4.0	4.0	
Lane Util. Factor		1.00	1.00					0.95	1.00	1.00	0.95	
Frpb, ped/bikes		1.00	1.00					1.00	1.00	1.00	1.00	
Flpb, ped/bikes		1.00	1.00					1.00	1.00	1.00	1.00	
Frt		1.00	0.85					1.00	0.85	1.00	1.00	
Flt Protected		0.95	1.00					1.00	1.00	0.95	1.00	
Satd. Flow (prot)		1711	1689					3539	1742	1770	3539	
Flt Permitted		0.95	1.00					1.00	1.00	0.95	1.00	
Satd. Flow (perm)		1711	1689					3539	1742	1770	3539	
Volume (vph)	330	0	120	0	0	0	0	730	235	245	655	0
Peak-hour factor, PHF	0.95	0.95	0.95	0.95	0.95	0.95	0.95	0.95	0.95	0.95	0.95	0.95
Adj. Flow (vph)	347	0	126	0	0	0	0	768	247	258	689	0
RTOR Reduction (vph)	0	0	93	0	0	0	0	0	145	0	0	0
Lane Group Flow (vph)	0	347	33	0	0	0	0	768	102	258	689	0
Confl. Peds. (#/hr)												
Turn Type	Split		Perm						Perm	Prot		
Protected Phases	4	4						2		1	6	
Permitted Phases			4						2			
Actuated Green, G (s)		22.9	22.9					35.9	35.9	16.8	57.3	
Effective Green, g (s)		23.8	23.8					37.0	37.0	17.2	58.2	
Actuated g/C Ratio		0.26	0.26					0.41	0.41	0.19	0.65	
Clearance Time (s)		4.9	4.9					5.1	5.1	4.4	4.9	
Vehicle Extension (s)		3.0	3.0					3.0	3.0	3.0	3.0	
Lane Grp Cap (vph)		452	447					1455	716	338	2289	
v/s Ratio Prot		c0.20						c0.22		c0.15	0.19	
v/s Ratio Perm			0.02						0.06			
v/c Ratio		0.77	0.07					0.53	0.14	0.76	0.30	
Uniform Delay, d1		30.5	24.8					19.9	16.6	34.5	7.0	
Progression Factor		1.00	1.00					1.00	1.00	0.60	2.06	
Incremental Delay, d2		7.7	0.1					1.4	0.4	5.3	0.2	
Delay (s)		38.2	24.9					21.3	17.0	25.8	14.5	
Level of Service		D	C					C	B	C	B	
Approach Delay (s)		34.7			0.0			20.3			17.6	
Approach LOS		C			A			C			B	

Intersection Summary				
HCM Average Control Delay	22.0	HCM Level of Service	C	
HCM Volume to Capacity ratio	0.65			
Actuated Cycle Length (s)	90.0	Sum of lost time (s)	12.0	
Intersection Capacity Utilization	85.0%	ICU Level of Service	E	
Analysis Period (min)	15			
c Critical Lane Group				

2035 W/ Project AM
8: Friars Rd WB Ramps & Qualcomm Wy 1/15/2015

Movement	EBL	EBT	EBR	WBL	WBT	WBR	NBL	NBT	NBR	SBL	SBT	SBR
Lane Configurations												
Ideal Flow (vphpl)	1900	1900	1900	1900	1900	1900	1900	1900	1900	1900	1900	1900
Lane Width	12	12	12	12	16	12	12	11	12	12	16	16
Total Lost time (s)				4.0	4.0		4.0	4.0			4.0	
Lane Util. Factor				0.95	0.95		1.00	1.00			0.95	
Frpb, ped/bikes				1.00	1.00		1.00	1.00			1.00	
Flpb, ped/bikes				1.00	1.00		1.00	1.00			1.00	
Frt				1.00	0.85		1.00	1.00			0.96	
Flt Protected				0.95	1.00		0.95	1.00			1.00	
Satd. Flow (prot)				1681	1710		1770	1801			3869	
Flt Permitted				0.95	1.00		0.95	1.00			1.00	
Satd. Flow (perm)				1681	1710		1770	1801			3869	
Volume (vph)	0	0	0	300	0	290	430	625	0	0	600	185
Peak-hour factor, PHF	0.95	0.95	0.95	0.95	0.95	0.95	0.95	0.95	0.95	0.95	0.95	0.95
Adj. Flow (vph)	0	0	0	316	0	305	453	658	0	0	632	195
RTOR Reduction (vph)	0	0	0	0	193	0	0	0	0	0	32	0
Lane Group Flow (vph)	0	0	0	309	119	0	453	658	0	0	795	0
Confl. Peds. (#/hr)												
Turn Type				Split			Prot					
Protected Phases				8	8		5	2			6	
Permitted Phases												
Actuated Green, G (s)				21.1	21.1		34.1	58.9			20.1	
Effective Green, g (s)				22.0	22.0		35.0	60.0			21.0	
Actuated g/C Ratio				0.24	0.24		0.39	0.67			0.23	
Clearance Time (s)				4.9	4.9		4.9	5.1			4.9	
Vehicle Extension (s)				3.0	3.0		3.0	3.0			3.0	
Lane Grp Cap (vph)				411	418		688	1201			903	
v/s Ratio Prot				c0.18	0.07		c0.26	0.37			c0.21	
v/s Ratio Perm												
v/c Ratio				0.75	0.29		0.66	0.55			0.88	
Uniform Delay, d1				31.5	27.6		22.6	7.9			33.3	
Progression Factor				1.00	1.00		0.75	0.30			1.07	
Incremental Delay, d2				7.6	0.4		3.9	1.4			9.6	
Delay (s)				39.1	28.0		20.9	3.8			45.3	
Level of Service				D	C		C	A			D	
Approach Delay (s)		0.0			33.5			10.8			45.3	
Approach LOS		A			C			B			D	

Intersection Summary				
HCM Average Control Delay	27.4	HCM Level of Service	C	
HCM Volume to Capacity ratio	0.74			
Actuated Cycle Length (s)	90.0	Sum of lost time (s)	12.0	
Intersection Capacity Utilization	85.0%	ICU Level of Service	E	
Analysis Period (min)	15			
c Critical Lane Group				

2035 W/ Project AM
9: Civitas & Qualcomm Wy 1/15/2015

Movement	EBT	EBR	WBL	WBT	NBL	NBR
Lane Configurations						
Ideal Flow (vphpl)	1900	1900	1900	1900	1900	1900
Total Lost time (s)	4.0	4.0	4.0	4.0	4.0	4.0
Lane Util. Factor	0.95	1.00	0.97	1.00	0.97	1.00
Frt	1.00	0.85	1.00	1.00	1.00	0.85
Flt Protected	1.00	1.00	0.95	1.00	0.95	1.00
Satd. Flow (prot)	3539	1583	3433	1863	3433	1583
Flt Permitted	1.00	1.00	0.63	1.00	0.95	1.00
Satd. Flow (perm)	3539	1583	2287	1863	3433	1583
Volume (vph)	180	280	400	165	215	355
Peak-hour factor, PHF	0.95	0.95	0.95	0.95	0.95	0.95
Adj. Flow (vph)	189	295	421	174	226	374
RTOR Reduction (vph)	0	161	0	0	0	203
Lane Group Flow (vph)	189	134	421	174	226	171
Turn Type		Perm	Perm			Perm
Protected Phases	4			8	2	
Permitted Phases		4	8			2
Actuated Green, G (s)	40.4	40.4	40.4	40.4	40.6	40.6
Effective Green, g (s)	40.9	40.9	40.9	40.9	41.1	41.1
Actuated g/C Ratio	0.45	0.45	0.45	0.45	0.46	0.46
Clearance Time (s)	4.5	4.5	4.5	4.5	4.5	4.5
Lane Grp Cap (vph)	1608	719	1039	847	1568	723
v/s Ratio Prot	0.05			0.09	0.07	
v/s Ratio Perm		0.08	c0.18			c0.11
v/c Ratio	0.12	0.19	0.41	0.21	0.14	0.24
Uniform Delay, d1	14.1	14.6	16.4	14.8	14.2	14.9
Progression Factor	0.87	0.67	1.00	1.00	0.77	1.67
Incremental Delay, d2	0.1	0.6	1.2	0.5	0.2	0.7
Delay (s)	12.5	10.4	17.6	15.3	11.1	25.6
Level of Service	B	B	B	B	B	C
Approach Delay (s)	11.2			16.9	20.1	
Approach LOS	B			B	C	

Intersection Summary			
HCM Average Control Delay	16.4	HCM Level of Service	B
HCM Volume to Capacity ratio	0.32		
Actuated Cycle Length (s)	90.0	Sum of lost time (s)	8.0
Intersection Capacity Utilization	35.4%	ICU Level of Service	A
Analysis Period (min)	15		

c Critical Lane Group

2035 W/ Project AM
10: Friars Rd & River Rd 1/15/2015

Movement	EBL	EBT	EBR	WBL	WBT	WBR	NBL	NBT	NBR	SBL	SBT	SBR
Lane Configurations												
Ideal Flow (vphpl)	1900	1900	1900	1900	1900	1900	1900	1900	1900	1900	1900	1900
Lane Width	14	12	12	10	12	12	12	11	13	12	15	10
Total Lost time (s)	4.0	4.0		4.0	4.0			4.0	4.0		4.0	
Lane Util. Factor	1.00	0.91		1.00	0.91			1.00	1.00		1.00	
Frt	1.00	0.99		1.00	0.98			1.00	0.85		0.94	
Flt Protected	0.95	1.00		0.95	1.00			0.97	1.00		0.98	
Satd. Flow (prot)	1888	5054		1652	4984			1738	1636		1898	
Flt Permitted	0.95	1.00		0.95	1.00			0.77	1.00		0.87	
Satd. Flow (perm)	1888	5054		1652	4984			1384	1636		1685	
Volume (vph)	105	715	30	165	1365	210	80	30	50	10	5	10
Peak-hour factor, PHF	0.95	0.95	0.95	0.95	0.95	0.95	0.95	0.95	0.95	0.95	0.95	0.95
Adj. Flow (vph)	111	753	32	174	1437	221	84	32	53	11	5	11
RTOR Reduction (vph)	0	3	0	0	15	0	0	0	44	0	9	0
Lane Group Flow (vph)	111	782	0	174	1643	0	0	116	9	0	18	0
Turn Type	Prot			Prot			Perm		Perm	Perm		
Protected Phases	5	2		1	6			8			4	
Permitted Phases							8		8	4		
Actuated Green, G (s)	7.3	29.4		9.8	31.9			9.8	9.8		9.8	
Effective Green, g (s)	7.7	31.6		10.2	34.1			10.7	10.7		10.7	
Actuated g/C Ratio	0.12	0.49		0.16	0.53			0.17	0.17		0.17	
Clearance Time (s)	4.4	6.2		4.4	6.2			4.9	4.9		4.9	
Vehicle Extension (s)	3.0	3.0		3.0	3.0			3.0	3.0		3.0	
Lane Grp Cap (vph)	225	2476		261	2635			230	271		280	
v/s Ratio Prot	0.06	0.15		c0.11	c0.33							
v/s Ratio Perm								c0.08	0.01		0.01	
v/c Ratio	0.49	0.32		0.67	0.62			0.50	0.03		0.06	
Uniform Delay, d1	26.6	9.9		25.6	10.7			24.5	22.6		22.7	
Progression Factor	1.00	1.00		1.00	1.00			1.00	1.00		1.00	
Incremental Delay, d2	1.7	0.1		6.3	0.5			1.7	0.0		0.1	
Delay (s)	28.3	10.0		31.9	11.2			26.2	22.6		22.8	
Level of Service	C	B		C	B			C	C		C	
Approach Delay (s)		12.3			13.1			25.1			22.8	
Approach LOS		B			B			C			C	

Intersection Summary			
HCM Average Control Delay	13.6	HCM Level of Service	B
HCM Volume to Capacity ratio	0.58		
Actuated Cycle Length (s)	64.5	Sum of lost time (s)	8.0
Intersection Capacity Utilization	57.3%	ICU Level of Service	B
Analysis Period (min)	15		

c Critical Lane Group

2035 W/ Project AM
11: Friars Rd & Fenton Pkwy 1/15/2015

Movement	EBL	EBT	EBR	WBL	WBT	WBR	NBL	NBT	NBR	SBL	SBT	SBR
Lane Configurations												
Ideal Flow (vphpl)	1900	1900	1900	1900	1900	1900	1900	1900	1900	1900	1900	1900
Lane Width	12	12	14	10	12	12	9	12	16	12	12	12
Total Lost time (s)	4.0	4.0	4.0	4.0	4.0	4.0	4.0	4.0	4.0	4.0	4.0	4.0
Lane Util. Factor	1.00	0.91	1.00	0.97	0.91	1.00	0.97	1.00	1.00	0.97	0.95	0.95
Frpb, ped/bikes	1.00	1.00	1.00	1.00	1.00	1.00	1.00	1.00	1.00	1.00	1.00	1.00
Flpb, ped/bikes	1.00	1.00	1.00	1.00	1.00	1.00	1.00	1.00	1.00	1.00	1.00	1.00
Frt	1.00	1.00	0.85	1.00	1.00	0.85	1.00	1.00	0.85	1.00	0.89	0.85
Flt Protected	0.95	1.00	1.00	0.95	1.00	1.00	0.95	1.00	1.00	0.95	1.00	1.00
Satd. Flow (prot)	1770	5085	1689	3204	5085	1583	3090	1863	1794	3433	1580	1504
Flt Permitted	0.95	1.00	1.00	0.95	1.00	1.00	0.95	1.00	1.00	0.95	1.00	1.00
Satd. Flow (perm)	1770	5085	1689	3204	5085	1583	3090	1863	1794	3433	1580	1504
Volume (vph)	30	660	35	215	1530	25	80	5	105	95	25	150
Peak-hour factor, PHF	0.95	0.95	0.95	0.95	0.95	0.95	0.95	0.95	0.95	0.95	0.95	0.95
Adj. Flow (vph)	32	695	37	226	1611	26	84	5	111	100	26	158
RTOR Reduction (vph)	0	0	15	0	0	9	0	0	97	0	55	16
Lane Group Flow (vph)	32	695	22	226	1611	17	84	5	14	100	36	77
Confl. Peds. (#/hr)												
Turn Type	Prot		pm+ov	Prot		pm+ov	Prot		Perm	Prot		pm+ov
Protected Phases	5	2	3	1	6	7	3	8		7	4	5
Permitted Phases			2			6			8			4
Actuated Green, G (s)	6.5	62.1	66.6	12.3	67.9	74.6	4.5	14.0	14.0	6.7	16.2	22.7
Effective Green, g (s)	6.9	64.3	69.2	12.7	70.1	77.2	4.9	14.9	14.9	7.1	17.1	24.0
Actuated g/C Ratio	0.06	0.56	0.60	0.11	0.61	0.67	0.04	0.13	0.13	0.06	0.15	0.21
Clearance Time (s)	4.4	6.2	4.4	4.4	6.2	4.4	4.4	4.9	4.9	4.4	4.9	4.4
Vehicle Extension (s)	3.0	3.0	3.0	3.0	3.0	3.0	3.0	3.0	3.0	3.0	3.0	3.0
Lane Grp Cap (vph)	106	2843	1075	354	3100	1118	132	241	232	212	235	366
v/s Ratio Prot	0.02	0.14	0.00	c0.07	c0.32	0.00	c0.03	0.00		0.03	0.02	c0.01
v/s Ratio Perm			0.01			0.01			0.01			0.04
v/c Ratio	0.30	0.24	0.02	0.64	0.52	0.02	0.64	0.02	0.06	0.47	0.15	0.21
Uniform Delay, d1	51.7	12.9	9.2	49.0	12.8	6.3	54.2	43.7	43.9	52.1	42.6	37.7
Progression Factor	1.00	1.00	1.00	1.00	1.00	1.00	1.00	1.00	1.00	1.00	1.00	1.00
Incremental Delay, d2	1.6	0.2	0.0	3.8	0.6	0.0	9.6	0.0	0.1	1.7	0.3	0.3
Delay (s)	53.4	13.2	9.2	52.7	13.5	6.3	63.8	43.7	44.0	53.8	42.9	38.0
Level of Service	D	B	A	D	B	A	E	D	D	D	D	D
Approach Delay (s)		14.6			18.1			52.3			45.1	
Approach LOS		B			B			D			D	

Intersection Summary			
HCM Average Control Delay	21.9	HCM Level of Service	C
HCM Volume to Capacity ratio	0.47		
Actuated Cycle Length (s)	115.0	Sum of lost time (s)	8.0
Intersection Capacity Utilization	52.3%	ICU Level of Service	A
Analysis Period (min)	15		

c Critical Lane Group

2035 W/ Project AM
12: Friars Rd & Northside Dr 1/15/2015

Movement	EBL	EBT	EBR	WBL	WBT	WBR	NBL	NBT	NBR	SBL	SBT	SBR
Lane Configurations												
Ideal Flow (vphpl)	1900	1900	1900	1900	1900	1900	1900	1900	1900	1900	1900	1900
Lane Width	10	12	16	10	13	12	11	16	12	11	15	12
Total Lost time (s)	4.0	4.0	4.0	4.0	4.0	4.0	4.0	4.0	4.0	4.0	4.0	4.0
Lane Util. Factor	0.97	0.91	1.00	0.97	0.91	1.00	0.97	1.00	1.00	0.97	1.00	1.00
Frpb, ped/bikes	1.00	1.00	1.00	1.00	1.00	1.00	1.00	1.00	1.00	1.00	1.00	1.00
Flpb, ped/bikes	1.00	1.00	1.00	1.00	1.00	1.00	1.00	1.00	1.00	1.00	1.00	1.00
Frt	1.00	1.00	0.85	1.00	1.00	0.85	1.00	1.00	0.85	1.00	1.00	0.85
Flt Protected	0.95	1.00	1.00	0.95	1.00	1.00	0.95	1.00	1.00	0.95	1.00	1.00
Satd. Flow (prot)	3204	5085	1794	3204	5255	1583	3319	2111	1583	3319	2049	1583
Flt Permitted	0.95	1.00	1.00	0.95	1.00	1.00	0.95	1.00	1.00	0.95	1.00	1.00
Satd. Flow (perm)	3204	5085	1794	3204	5255	1583	3319	2111	1583	3319	2049	1583
Volume (vph)	40	580	235	485	1530	45	80	5	175	155	30	110
Peak-hour factor, PHF	0.95	0.95	0.95	0.95	0.95	0.95	0.95	0.95	0.95	0.95	0.95	0.95
Adj. Flow (vph)	42	611	247	511	1611	47	84	5	184	163	32	116
RTOR Reduction (vph)	0	0	167	0	0	16	0	0	35	0	0	97
Lane Group Flow (vph)	42	611	80	511	1611	31	84	5	149	163	32	19
Confl. Peds. (#/hr)												
Turn Type	Prot		Perm	Prot		pm+ov	Prot		pm+ov	Prot		Perm
Protected Phases	5	2		1	6	7	3	8	1	7	4	
Permitted Phases			2			6			8			4
Actuated Green, G (s)	3.3	21.0	21.0	16.6	34.1	43.5	3.1	4.2	20.8	9.4	10.5	10.5
Effective Green, g (s)	3.7	23.0	23.0	17.0	36.3	46.1	3.5	5.1	22.1	9.8	11.4	11.4
Actuated g/C Ratio	0.05	0.32	0.32	0.24	0.51	0.65	0.05	0.07	0.31	0.14	0.16	0.16
Clearance Time (s)	4.4	6.0	6.0	4.4	6.2	4.4	4.4	4.9	4.4	4.4	4.9	4.9
Vehicle Extension (s)	3.0	3.0	3.0	3.0	3.0	3.0	3.0	3.0	3.0	3.0	3.0	3.0
Lane Grp Cap (vph)	167	1650	582	768	2691	1119	164	152	583	459	329	255
v/s Ratio Prot	0.01	0.12		c0.16	c0.31	0.00	c0.03	0.00	c0.06	c0.05	0.02	
v/s Ratio Perm			0.04			0.02			0.03			0.01
v/c Ratio	0.25	0.37	0.14	0.67	0.60	0.03	0.51	0.03	0.26	0.36	0.10	0.07
Uniform Delay, d1	32.3	18.4	16.9	24.4	12.2	4.4	32.9	30.6	18.2	27.7	25.4	25.3
Progression Factor	1.00	1.00	1.00	1.00	1.00	1.00	1.00	1.00	1.00	1.00	1.00	1.00
Incremental Delay, d2	0.8	0.1	0.1	2.2	0.4	0.0	2.7	0.1	0.2	0.5	0.1	0.1
Delay (s)	33.1	18.5	17.0	26.6	12.5	4.4	35.6	30.7	18.5	28.2	25.5	25.4
Level of Service	C	B	B	C	B	A	D	C	B	C	C	C
Approach Delay (s)		18.8			15.7			24.0			26.9	
Approach LOS		B			B			C			C	

Intersection Summary			
HCM Average Control Delay	18.0	HCM Level of Service	B
HCM Volume to Capacity ratio	0.54		
Actuated Cycle Length (s)	70.9	Sum of lost time (s)	12.0
Intersection Capacity Utilization	54.0%	ICU Level of Service	A
Analysis Period (min)	15		

c Critical Lane Group

2035 W/ Project AM
17: Mission Ctr Rd & Murray Ridge Rd 1/15/2015

Movement	EBL	EBT	EBR	WBL	WBT	WBR	NBL	NBT	NBR	SBL	SBT	SBR
Lane Configurations												
Ideal Flow (vphpl)	1900	1900	1900	1900	1900	1900	1900	1900	1900	1900	1900	1900
Lane Width	12	10	12	12	16	12	12	16	12	12	16	12
Total Lost time (s)		4.0	4.0		4.0		4.0	4.0		4.0	4.0	4.0
Lane Util. Factor		1.00	1.00		1.00		1.00	1.00		1.00	1.00	1.00
Frpb, ped/bikes		1.00	1.00		1.00		1.00	1.00		1.00	1.00	1.00
Flpb, ped/bikes		1.00	1.00		1.00		1.00	1.00		1.00	1.00	1.00
Frt		1.00	0.85		0.99		1.00	0.98		1.00	1.00	0.85
Flt Protected		0.97	1.00		0.96		0.95	1.00		0.95	1.00	1.00
Satd. Flow (prot)		1679	1583		2019		1770	2077		1770	2111	1583
Flt Permitted		0.97	1.00		0.96		0.95	1.00		0.95	1.00	1.00
Satd. Flow (perm)		1679	1583		2019		1770	2077		1770	2111	1583
Volume (vph)	100	40	60	145	35	10	300	450	55	5	510	130
Peak-hour factor, PHF	0.95	0.95	0.95	0.95	0.95	0.95	0.95	0.95	0.95	0.95	0.95	0.95
Adj. Flow (vph)	105	42	63	153	37	11	316	474	58	5	537	137
RTOR Reduction (vph)	0	0	53	0	2	0	0	3	0	0	0	29
Lane Group Flow (vph)	0	147	10	0	199	0	316	529	0	5	537	108
Confl. Peds. (#/hr)												
Turn Type	Split		Perm	Split			Prot			Prot		Perm
Protected Phases	4	4		3	3		5	2		1	6	
Permitted Phases			4									6
Actuated Green, G (s)		14.3	14.3		13.9		20.3	51.7		0.7	32.1	32.1
Effective Green, g (s)		15.6	15.6		14.8		20.7	52.6		1.1	33.0	33.0
Actuated g/C Ratio		0.16	0.16		0.15		0.21	0.53		0.01	0.33	0.33
Clearance Time (s)		5.3	5.3		4.9		4.4	4.9		4.4	4.9	4.9
Vehicle Extension (s)		3.5	3.5		2.0		2.0	3.9		2.0	3.9	3.9
Lane Grp Cap (vph)		262	247		299		366	1091		19	696	522
v/s Ratio Prot		c0.09			c0.10		c0.18	0.25		0.00	c0.25	
v/s Ratio Perm			0.01									0.07
v/c Ratio		0.56	0.04		0.67		0.86	0.49		0.26	0.77	0.21
Uniform Delay, d1		39.1	35.9		40.3		38.3	15.1		49.1	30.2	24.1
Progression Factor		1.00	1.00		1.00		1.00	1.00		1.00	1.00	1.00
Incremental Delay, d2		3.0	0.1		4.3		18.0	0.5		2.7	5.6	0.3
Delay (s)		42.1	36.0		44.6		56.3	15.6		51.8	35.7	24.4
Level of Service		D	D		D		E	B		D	D	C
Approach Delay (s)		40.2			44.6			30.8			33.6	
Approach LOS		D			D			C			C	

Intersection Summary				
HCM Average Control Delay	34.2	HCM Level of Service	C	
HCM Volume to Capacity ratio	0.74			
Actuated Cycle Length (s)	100.1	Sum of lost time (s)	16.0	
Intersection Capacity Utilization	70.6%	ICU Level of Service	C	
Analysis Period (min)	15			
c Critical Lane Group				

2035 W/ Project AM
18: Civitas & Mission Center Rd 1/15/2015

Movement	EBL	EBT	EBR	WBL	WBT	WBR	NBL	NBT	NBR	SBL	SBT	SBR
Lane Configurations												
Ideal Flow (vphpl)	1900	1900	1900	1900	1900	1900	1900	1900	1900	1900	1900	1900
Lane Width	12	12	16	12	12	12	10	12	12	12	12	12
Total Lost time (s)	4.0	4.0	4.0	4.0	4.0		4.0	4.0	4.0	4.0	4.0	
Lane Util. Factor	1.00	1.00	1.00	0.97	1.00		0.97	0.95	1.00	1.00	0.95	
Frpb, ped/bikes	1.00	1.00	1.00	1.00	1.00		1.00	1.00	1.00	1.00	1.00	
Flpb, ped/bikes	1.00	1.00	1.00	1.00	1.00		1.00	1.00	1.00	1.00	1.00	
Frt	1.00	1.00	0.85	1.00	0.95		1.00	1.00	0.85	1.00	0.92	
Flt Protected	0.95	1.00	1.00	0.95	1.00		0.95	1.00	1.00	0.95	1.00	
Satd. Flow (prot)	1770	1863	1794	3433	1763		3204	3539	1583	1770	3249	
Flt Permitted	0.95	1.00	1.00	0.95	1.00		0.95	1.00	1.00	0.95	1.00	
Satd. Flow (perm)	1770	1863	1794	3433	1763		3204	3539	1583	1770	3249	
Volume (vph)	40	40	85	350	45	25	390	250	240	40	245	295
Peak-hour factor, PHF	0.95	0.95	0.95	0.95	0.95	0.95	0.95	0.95	0.95	0.95	0.95	0.95
Adj. Flow (vph)	42	42	89	368	47	26	411	263	253	42	258	311
RTOR Reduction (vph)	0	0	78	0	19	0	0	0	149	0	222	0
Lane Group Flow (vph)	42	42	11	368	54	0	411	263	104	42	347	0
Confl. Peds. (#/hr)												
Turn Type	Prot		Perm	Prot			Prot		Perm	Prot		
Protected Phases	7	4		3	8		5	2		1	6	
Permitted Phases		4	4		8			2	2		6	
Actuated Green, G (s)	4.4	7.7	7.7	12.3	15.6		17.8	28.5	28.5	4.4	15.1	
Effective Green, g (s)	4.8	8.6	8.6	12.7	16.5		18.2	29.5	29.5	4.8	16.1	
Actuated g/C Ratio	0.07	0.12	0.12	0.18	0.23		0.25	0.41	0.41	0.07	0.22	
Clearance Time (s)	4.4	4.9	4.9	4.4	4.9		4.4	5.0	5.0	4.4	5.0	
Vehicle Extension (s)	3.0	3.0	3.0	3.0	3.0		3.0	3.0	3.0	3.0	3.0	
Lane Grp Cap (vph)	119	224	215	609	406		814	1458	652	119	731	
v/s Ratio Prot	0.02	c0.02		c0.11	0.03		c0.13	0.07		0.02	c0.11	
v/s Ratio Perm			0.01						0.07			
v/c Ratio	0.35	0.19	0.05	0.60	0.13		0.50	0.18	0.16	0.35	0.47	
Uniform Delay, d1	31.9	28.4	27.9	27.1	21.9		22.8	13.4	13.2	31.9	24.1	
Progression Factor	1.00	1.00	1.00	1.00	1.00		1.00	1.00	1.00	1.00	1.00	
Incremental Delay, d2	1.8	0.4	0.1	1.7	0.1		2.2	0.1	0.1	1.8	0.5	
Delay (s)	33.7	28.8	28.0	28.8	22.0		25.1	13.4	13.4	33.7	24.6	
Level of Service	C	C	C	C	C		C	B	B	C	C	
Approach Delay (s)		29.6			27.7			18.6			25.2	
Approach LOS		C			C			B			C	

Intersection Summary				
HCM Average Control Delay	23.2	HCM Level of Service	C	
HCM Volume to Capacity ratio	0.47			
Actuated Cycle Length (s)	71.6	Sum of lost time (s)	16.0	
Intersection Capacity Utilization	54.0%	ICU Level of Service	A	
Analysis Period (min)	15			
c Critical Lane Group				

2035 W/ Project AM
19: Mission Center Crt & Mission Center Rd 1/15/2015

Movement	EBL	EBT	EBR	WBL	WBT	WBR	NBL	NBT	NBR	SBL	SBT	SBR
Lane Configurations												
Ideal Flow (vphpl)	1900	1900	1900	1900	1900	1900	1900	1900	1900	1900	1900	1900
Lane Width	10	12	16	12	12	12	11	12	12	10	12	12
Total Lost time (s)		4.0			4.0		4.0	4.0		4.0	4.0	
Lane Util. Factor		1.00			1.00		1.00	0.95		1.00	0.95	
Frt		0.96			0.91		1.00	0.99		1.00	0.98	
Flt Protected		0.97			0.98		0.95	1.00		0.95	1.00	
Satd. Flow (prot)		1736			1673		1711	3510		1652	3456	
Flt Permitted		0.97			0.98		0.95	1.00		0.95	1.00	
Satd. Flow (perm)		1736			1673		1711	3510		1652	3456	
Volume (vph)	80	5	30	70	5	135	70	530	30	85	565	105
Peak-hour factor, PHF	0.95	0.95	0.95	0.95	0.95	0.95	0.95	0.95	0.95	0.95	0.95	0.95
Adj. Flow (vph)	84	5	32	74	5	142	74	558	32	89	595	111
RTOR Reduction (vph)	0	15	0	0	63	0	0	4	0	0	13	0
Lane Group Flow (vph)	0	106	0	0	158	0	74	586	0	89	693	0
Turn Type	Split			Split			Prot			Prot		
Protected Phases	4	4		3	3		5	2		1	6	
Permitted Phases												
Actuated Green, G (s)		9.3			8.6		4.1	19.9		8.2	24.1	
Effective Green, g (s)		9.3			8.6		4.1	21.2		8.2	25.3	
Actuated g/C Ratio		0.15			0.14		0.06	0.33		0.13	0.40	
Clearance Time (s)		4.0			4.0		4.0	5.3		4.0	5.2	
Vehicle Extension (s)		3.0			3.0		3.0	3.0		3.0	3.0	
Lane Grp Cap (vph)		255			227		111	1176		214	1381	
v/s Ratio Prot		c0.06			c0.09		c0.04	0.17		c0.05	c0.20	
v/s Ratio Perm												
v/c Ratio		0.41			0.70		0.67	0.50		0.42	0.50	
Uniform Delay, d1		24.5			26.1		28.9	16.8		25.3	14.3	
Progression Factor		1.00			1.00		1.00	1.00		1.00	1.00	
Incremental Delay, d2		1.1			8.9		14.1	0.3		1.3	0.3	
Delay (s)		25.6			35.0		43.0	17.1		26.7	14.6	
Level of Service		C			D		D	B		C	B	
Approach Delay (s)		25.6			35.0			20.0			15.9	
Approach LOS		C			D			C			B	

Intersection Summary				
HCM Average Control Delay	20.4	HCM Level of Service	C	
HCM Volume to Capacity ratio	0.50			
Actuated Cycle Length (s)	63.3	Sum of lost time (s)	12.0	
Intersection Capacity Utilization	45.4%	ICU Level of Service	A	
Analysis Period (min)	15			
c Critical Lane Group				

2035 W/ Project AM
23: I-805 NB Ramps & Murray Ridge Rd 1/15/2015

Movement	EBL	EBT	EBR	WBL	WBT	WBR	NBL	NBT	NBR	SBL	SBT	SBR
Lane Configurations												
Ideal Flow (vphpl)	1900	1900	1900	1900	1900	1900	1900	1900	1900	1900	1900	1900
Lane Width	12	12	12	16	12	16	12	16	12	12	16	11
Total Lost time (s)					4.0	4.0	4.0	4.0			4.0	
Lane Util. Factor					1.00	1.00	1.00	1.00			0.95	
Frpb, ped/bikes					1.00	1.00	1.00	1.00			1.00	
Flpb, ped/bikes					1.00	1.00	1.00	1.00			1.00	
Frt					1.00	0.85	1.00	1.00			0.94	
Flt Protected					0.95	1.00	0.95	1.00			1.00	
Satd. Flow (prot)					1770	1794	1770	2111			3782	
Flt Permitted					0.95	1.00	0.95	1.00			1.00	
Satd. Flow (perm)					1770	1794	1770	2111			3782	
Volume (vph)	0	0	0	270	0	475	715	355	0	0	440	270
Peak-hour factor, PHF	0.95	0.95	0.95	0.95	0.95	0.95	0.95	0.95	0.95	0.95	0.95	0.95
Adj. Flow (vph)	0	0	0	284	0	500	753	374	0	0	463	284
RTOR Reduction (vph)	0	0	0	0	0	398	0	0	0	0	103	0
Lane Group Flow (vph)	0	0	0	0	284	102	753	374	0	0	644	0
Confl. Peds. (#/hr)												
Turn Type				Perm		Perm	Prot					
Protected Phases					6		3	8			4	
Permitted Phases				6		6						
Actuated Green, G (s)					16.5	16.5	37.6	58.0			15.9	
Effective Green, g (s)					17.0	17.0	38.1	58.5			16.4	
Actuated g/C Ratio					0.20	0.20	0.46	0.70			0.20	
Clearance Time (s)					4.5	4.5	4.5	4.5			4.5	
Vehicle Extension (s)					3.0	3.0	3.0	3.0			3.0	
Lane Grp Cap (vph)					360	365	808	1479			743	
v/s Ratio Prot							c0.43	0.18			c0.17	
v/s Ratio Perm					0.16	0.06						
v/c Ratio					0.79	0.28	0.93	0.25			0.87	
Uniform Delay, d1					31.5	28.1	21.5	4.5			32.5	
Progression Factor					1.00	1.00	1.00	1.00			1.00	
Incremental Delay, d2					10.9	0.4	17.3	0.1			10.4	
Delay (s)					42.5	28.5	38.8	4.6			42.9	
Level of Service					D	C	D	A			D	
Approach Delay (s)		0.0			33.6			27.4			42.9	
Approach LOS		A			C			C			D	

Intersection Summary				
HCM Average Control Delay	33.6	HCM Level of Service	C	
HCM Volume to Capacity ratio	0.88			
Actuated Cycle Length (s)	83.5	Sum of lost time (s)	12.0	
Intersection Capacity Utilization	110.4%	ICU Level of Service	H	
Analysis Period (min)	15			
c Critical Lane Group				

2035 W/ Project AM
24: I-805 SB Ramps & Murray Ridge Rd 1/15/2015

Movement	EBL	EBT	EBR	WBL	WBT	WBR	NBL	NBT	NBR	SBL	SBT	SBR
Lane Configurations												
Ideal Flow (vphpl)	1900	1900	1900	1900	1900	1900	1900	1900	1900	1900	1900	1900
Lane Width	12	14	12	12	12	12	12	16	12	12	15	12
Total Lost time (s)		4.0	4.0					4.0		4.0	4.0	
Lane Util. Factor		1.00	1.00					1.00		1.00	1.00	
Frpb, ped/bikes		1.00	1.00					1.00		1.00	1.00	
Flpb, ped/bikes		1.00	1.00					1.00		1.00	1.00	
Frt		1.00	0.85					0.96		1.00	1.00	
Flt Protected		0.95	1.00					1.00		0.95	1.00	
Satd. Flow (prot)		1888	1583					2021		1770	2049	
Flt Permitted		0.95	1.00					1.00		0.95	1.00	
Satd. Flow (perm)		1888	1583					2021		1770	2049	
Volume (vph)	240	0	670	0	0	0	0	830	385	360	350	0
Peak-hour factor, PHF	0.95	0.95	0.95	0.95	0.95	0.95	0.95	0.95	0.95	0.95	0.95	0.95
Adj. Flow (vph)	253	0	705	0	0	0	0	874	405	379	368	0
RTOR Reduction (vph)	0	0	533	0	0	0	0	12	0	0	0	0
Lane Group Flow (vph)	0	253	172	0	0	0	0	1267	0	379	368	0
Confl. Peds. (#/hr)												
Turn Type	Perm		Perm							Prot		
Protected Phases		4						2		1	6	
Permitted Phases	4		4									
Actuated Green, G (s)		17.0	17.0					80.7		27.8	112.7	
Effective Green, g (s)		18.0	18.0					82.0		28.0	114.0	
Actuated g/C Ratio		0.13	0.13					0.59		0.20	0.81	
Clearance Time (s)		5.0	5.0					5.3		4.2	5.3	
Vehicle Extension (s)		3.0	3.0					3.0		3.0	3.0	
Lane Grp Cap (vph)		243	204					1184		354	1668	
v/s Ratio Prot								c0.63		c0.21	0.18	
v/s Ratio Perm		0.13	0.11									
v/c Ratio		1.04	0.84					1.07		1.07	0.22	
Uniform Delay, d1		61.0	59.6					29.0		56.0	2.9	
Progression Factor		1.00	1.00					1.00		1.00	1.00	
Incremental Delay, d2		68.9	25.6					47.1		67.9	0.1	
Delay (s)		129.9	85.3					76.1		123.9	3.0	
Level of Service		F	F					E		F	A	
Approach Delay (s)		97.0			0.0			76.1			64.3	
Approach LOS		F			A			E			E	

Intersection Summary			
HCM Average Control Delay	79.9	HCM Level of Service	E
HCM Volume to Capacity ratio	1.07		
Actuated Cycle Length (s)	140.0	Sum of lost time (s)	12.0
Intersection Capacity Utilization	110.4%	ICU Level of Service	H
Analysis Period (min)	15		
c Critical Lane Group			

2035 W/ Project AM
25: Rio San Diego Drive & Qualcomm Wy 1/15/2015

Movement	EBL	EBT	EBR	WBL	WBT	WBR	NBL	NBT	NBR	SBL	SBT	SBR
Lane Configurations												
Ideal Flow (vphpl)	1900	1900	1900	1900	1900	1900	1900	1900	1900	1900	1900	1900
Lane Width	12	12	14	12	12	12	10	12	12	12	12	12
Total Lost time (s)	4.0	4.0	4.0	4.0	4.0	4.0	4.0	4.0		4.0	4.0	
Lane Util. Factor	0.97	1.00	1.00	0.97	0.95	1.00	0.97	0.91		0.97	0.91	
Frpb, ped/bikes	1.00	1.00	1.00	1.00	1.00	1.00	1.00	1.00		1.00	1.00	
Flpb, ped/bikes	1.00	1.00	1.00	1.00	1.00	1.00	1.00	1.00		1.00	1.00	
Frt	1.00	1.00	0.85	1.00	1.00	0.85	1.00	0.92		1.00	0.96	
Flt Protected	0.95	1.00	1.00	0.95	1.00	1.00	0.95	1.00		0.95	1.00	
Satd. Flow (prot)	3433	1863	1689	3433	3539	1583	3204	4674		3433	4890	
Flt Permitted	0.95	1.00	1.00	0.72	1.00	1.00	0.95	1.00		0.19	1.00	
Satd. Flow (perm)	3433	1863	1689	2587	3539	1583	3204	4674		679	4890	
Volume (vph)	190	60	135	225	30	245	95	585	685	215	365	125
Peak-hour factor, PHF	0.95	0.95	0.95	0.95	0.95	0.95	0.95	0.95	0.95	0.95	0.95	0.95
Adj. Flow (vph)	200	63	142	237	32	258	100	616	721	226	384	132
RTOR Reduction (vph)	0	0	95	0	0	206	0	122	0	0	45	0
Lane Group Flow (vph)	200	63	47	237	32	52	100	1215	0	226	471	0
Confl. Peds. (#/hr)												
Turn Type	Prot		pm+ov	Perm		Perm	Prot			Perm		
Protected Phases	5	2	3		6		3	8			4	
Permitted Phases			2	6		6				4		
Actuated Green, G (s)	7.2	28.5	32.7	17.0	17.0	17.0	4.2	65.5		56.9	56.9	
Effective Green, g (s)	7.6	29.6	34.2	18.0	18.0	18.0	4.6	66.8		58.2	58.2	
Actuated g/C Ratio	0.07	0.28	0.33	0.17	0.17	0.17	0.04	0.64		0.56	0.56	
Clearance Time (s)	4.4	5.1	4.4	5.0	5.0	5.0	4.4	5.3		5.3	5.3	
Vehicle Extension (s)	3.0	3.0	3.0	3.0	3.0	3.0	3.0	3.0		3.0	3.0	
Lane Grp Cap (vph)	250	528	618	446	610	273	141	2991		379	2726	
v/s Ratio Prot	c0.06	0.03	0.00		0.01		c0.03	0.26			0.10	
v/s Ratio Perm			0.02	c0.09		0.03				c0.33		
v/c Ratio	0.80	0.12	0.08	0.53	0.05	0.19	0.71	0.41		0.60	0.17	
Uniform Delay, d1	47.7	27.7	24.2	39.4	36.1	37.0	49.2	9.1		15.3	11.3	
Progression Factor	1.00	1.00	1.00	1.00	1.00	1.00	1.00	1.00		1.00	1.00	
Incremental Delay, d2	16.5	0.1	0.1	1.2	0.0	0.3	15.1	0.1		2.5	0.0	
Delay (s)	64.2	27.8	24.3	40.6	36.1	37.3	64.3	9.2		17.8	11.3	
Level of Service	E	C	C	D	D	D	E	A		B	B	
Approach Delay (s)		44.5			38.7			13.1			13.3	
Approach LOS		D			D			B			B	

Intersection Summary			
HCM Average Control Delay	21.6	HCM Level of Service	C
HCM Volume to Capacity ratio	0.61		
Actuated Cycle Length (s)	104.4	Sum of lost time (s)	16.0
Intersection Capacity Utilization	57.3%	ICU Level of Service	B
Analysis Period (min)	15		
c Critical Lane Group			

2035 W/ Project AM
26: Rio San Diego Drive & Rio Bonito Wy 1/15/2015

Movement	EBL	EBT	EBR	WBL	WBT	WBR	NBL	NBT	NBR	SBL	SBT	SBR
Lane Configurations												
Ideal Flow (vphpl)	1900	1900	1900	1900	1900	1900	1900	1900	1900	1900	1900	1900
Total Lost time (s)	4.0	4.0		4.0	4.0			4.0		4.0	4.0	
Lane Util. Factor	1.00	0.95		1.00	0.95			1.00		1.00	1.00	
Frt	1.00	0.98		1.00	0.99			0.97		1.00	0.89	
Flt Protected	0.95	1.00		0.95	1.00			0.97		0.95	1.00	
Satd. Flow (prot)	1770	3476		1770	3520			1757		1770	1649	
Flt Permitted	0.45	1.00		0.40	1.00			0.91		0.74	1.00	
Satd. Flow (perm)	845	3476		747	3520			1641		1385	1649	
Volume (vph)	55	445	60	25	410	15	10	5	5	150	20	65
Peak-hour factor, PHF	0.95	0.95	0.95	0.95	0.95	0.95	0.95	0.95	0.95	0.95	0.95	0.95
Adj. Flow (vph)	58	468	63	26	432	16	11	5	5	158	21	68
RTOR Reduction (vph)	0	12	0	0	3	0	0	3	0	0	37	0
Lane Group Flow (vph)	58	519	0	26	445	0	0	18	0	158	52	0
Turn Type	Perm			Perm			Perm			Perm		
Protected Phases		4			8			2			6	
Permitted Phases	4			8			2			6		
Actuated Green, G (s)	41.1	41.1		41.1	41.1			39.9		39.9	39.9	
Effective Green, g (s)	41.6	41.6		41.6	41.6			40.4		40.4	40.4	
Actuated g/C Ratio	0.46	0.46		0.46	0.46			0.45		0.45	0.45	
Clearance Time (s)	4.5	4.5		4.5	4.5			4.5		4.5	4.5	
Lane Grp Cap (vph)	391	1607		345	1627			737		622	740	
v/s Ratio Prot		c0.15			0.13						0.03	
v/s Ratio Perm	0.07			0.03				0.01		c0.11		
v/c Ratio	0.15	0.32		0.08	0.27			0.02		0.25	0.07	
Uniform Delay, d1	14.0	15.3		13.5	14.9			13.8		15.4	14.1	
Progression Factor	1.00	1.00		1.00	1.00			1.00		1.00	1.00	
Incremental Delay, d2	0.8	0.5		0.4	0.4			0.1		1.0	0.2	
Delay (s)	14.8	15.8		13.9	15.3			13.9		16.4	14.3	
Level of Service	B	B		B	B			B		B	B	
Approach Delay (s)		15.7			15.2			13.9			15.6	
Approach LOS		B			B			B			B	

Intersection Summary			
HCM Average Control Delay	15.5	HCM Level of Service	B
HCM Volume to Capacity ratio	0.29		
Actuated Cycle Length (s)	90.0	Sum of lost time (s)	8.0
Intersection Capacity Utilization	42.2%	ICU Level of Service	A
Analysis Period (min)	15		
c Critical Lane Group			

2035 W/ Project AM
50: Phyllis Pl & 1/22/2015

Movement	EBT	EBR	WBL	WBT	NBL	NBR
Lane Configurations						
Ideal Flow (vphpl)	1900	1900	1900	1900	1900	1900
Total Lost time (s)	4.0		4.0	4.0	4.0	4.0
Lane Util. Factor	0.95		0.97	1.00	1.00	0.88
Frt	0.96		1.00	1.00	1.00	0.85
Flt Protected	1.00		0.95	1.00	0.95	1.00
Satd. Flow (prot)	3383		3433	1863	1770	2787
Flt Permitted	1.00		0.95	1.00	0.95	1.00
Satd. Flow (perm)	3383		3433	1863	1770	2787
Volume (vph)	85	35	905	50	30	1130
Peak-hour factor, PHF	0.95	0.95	0.95	0.95	0.95	0.95
Adj. Flow (vph)	89	37	953	53	32	1189
RTOR Reduction (vph)	34	0	0	0	0	304
Lane Group Flow (vph)	92	0	953	53	32	885
Turn Type			Prot			pm+ov
Protected Phases	4		3	8	2	3
Permitted Phases						2
Actuated Green, G (s)	5.8		31.2	41.5	19.7	50.9
Effective Green, g (s)	6.3		31.7	42.0	20.2	51.9
Actuated g/C Ratio	0.09		0.45	0.60	0.29	0.74
Clearance Time (s)	4.5		4.5	4.5	4.5	4.5
Vehicle Extension (s)	3.0		3.0	3.0	3.0	3.0
Lane Grp Cap (vph)	304		1550	1115	509	2219
v/s Ratio Prot	c0.03		c0.28	0.03	0.02	c0.18
v/s Ratio Perm						0.14
v/c Ratio	0.30		0.61	0.05	0.06	0.40
Uniform Delay, d1	29.9		14.6	5.8	18.1	3.4
Progression Factor	1.00		1.00	1.00	1.00	1.00
Incremental Delay, d2	0.6		0.7	0.0	0.2	0.1
Delay (s)	30.5		15.3	5.8	18.4	3.5
Level of Service	C		B	A	B	A
Approach Delay (s)	30.5			14.8	3.9	
Approach LOS	C			B	A	

Intersection Summary			
HCM Average Control Delay	10.0	HCM Level of Service	A
HCM Volume to Capacity ratio	0.52		
Actuated Cycle Length (s)	70.2	Sum of lost time (s)	12.0
Intersection Capacity Utilization	49.7%	ICU Level of Service	A
Analysis Period (min)	15		
c Critical Lane Group			

2035 W/ Project AM
51: Via Alta & 1/22/2015

Movement	EBL	EBT	EBR	WBL	WBT	WBR	NBL	NBT	NBR	SBL	SBT	SBR
Lane Configurations												
Ideal Flow (vphpl)	1900	1900	1900	1900	1900	1900	1900	1900	1900	1900	1900	1900
Total Lost time (s)	4.0	4.0			4.0		4.0	4.0		4.0	4.0	4.0
Lane Util. Factor	1.00	1.00			1.00		1.00	1.00		1.00	1.00	1.00
Frt	1.00	0.85			0.96		1.00	1.00		1.00	1.00	0.85
Flt Protected	0.95	1.00			0.98		0.95	1.00		0.95	1.00	1.00
Satd. Flow (prot)	1770	1591			1753		1770	1861		1770	1863	1583
Flt Permitted	0.95	1.00			0.98		0.95	1.00		0.95	1.00	1.00
Satd. Flow (perm)	1770	1591			1753		1770	1861		1770	1863	1583
Volume (vph)	555	5	165	15	10	10	90	590	5	5	565	380
Peak-hour factor, PHF	0.95	0.95	0.95	0.95	0.95	0.95	0.95	0.95	0.95	0.95	0.95	0.95
Adj. Flow (vph)	584	5	174	16	11	11	95	621	5	5	595	400
RTOR Reduction (vph)	0	113	0	0	10	0	0	0	0	0	0	168
Lane Group Flow (vph)	584	66	0	0	28	0	95	626	0	5	595	232
Turn Type	Split			Split			Prot			Prot		Perm
Protected Phases	4	4		8	8		5	2		1	6	
Permitted Phases												6
Actuated Green, G (s)	46.6	46.6			6.4		11.9	62.8		0.7	51.6	51.6
Effective Green, g (s)	47.1	47.1			6.9		12.4	63.3		1.2	52.1	52.1
Actuated g/C Ratio	0.35	0.35			0.05		0.09	0.47		0.01	0.39	0.39
Clearance Time (s)	4.5	4.5			4.5		4.5	4.5		4.5	4.5	4.5
Vehicle Extension (s)	3.0	3.0			3.0		3.0	3.0		3.0	3.0	3.0
Lane Grp Cap (vph)	620	557			90		163	876		16	722	613
v/s Ratio Prot	c0.33	0.04			c0.02		c0.05	c0.34		0.00	c0.32	
v/s Ratio Perm												0.15
v/c Ratio	0.94	0.12			0.31		0.58	0.71		0.31	0.82	0.38
Uniform Delay, d1	42.4	29.6			61.5		58.6	28.4		66.2	37.1	29.6
Progression Factor	1.00	1.00			1.00		1.00	1.00		1.00	1.00	1.00
Incremental Delay, d2	22.8	0.1			1.9		5.2	5.0		10.9	7.6	0.4
Delay (s)	65.1	29.7			63.4		63.8	33.3		77.1	44.7	30.0
Level of Service	E	C			E		E	C		E	D	C
Approach Delay (s)		56.8			63.4			37.4			39.0	
Approach LOS		E			E			D			D	

Intersection Summary				
HCM Average Control Delay	44.3	HCM Level of Service	D	
HCM Volume to Capacity ratio	0.85			
Actuated Cycle Length (s)	134.5	Sum of lost time (s)	20.0	
Intersection Capacity Utilization	82.1%	ICU Level of Service	E	
Analysis Period (min)	15			
c Critical Lane Group				

2035 W/ Project AM
53: Civitas & Via Alta 1/15/2015

Movement	EBL	EBT	EBR	WBL	WBT	WBR	NBL	NBT	NBR	SBL	SBT	SBR
Lane Configurations												
Ideal Flow (vphpl)	1900	1900	1900	1900	1900	1900	1900	1900	1900	1900	1900	1900
Total Lost time (s)	4.0	4.0		4.0	4.0		4.0	4.0		4.0	4.0	
Lane Util. Factor	1.00	0.95		1.00	0.95		1.00	1.00		1.00	1.00	
Frt	1.00	0.97		1.00	0.89		1.00	0.96		1.00	0.90	
Flt Protected	0.95	1.00		0.95	1.00		0.95	1.00		0.95	1.00	
Satd. Flow (prot)	1770	3444		1770	3148		1770	1783		1770	1677	
Flt Permitted	0.61	1.00		0.64	1.00		0.35	1.00		0.62	1.00	
Satd. Flow (perm)	1143	3444		1190	3148		646	1783		1154	1677	
Volume (vph)	220	140	30	50	55	155	70	125	50	260	150	295
Peak-hour factor, PHF	0.95	0.95	0.95	0.95	0.95	0.95	0.95	0.95	0.95	0.95	0.95	0.95
Adj. Flow (vph)	232	147	32	53	58	163	74	132	53	274	158	311
RTOR Reduction (vph)	0	18	0	0	92	0	0	16	0	0	78	0
Lane Group Flow (vph)	232	161	0	53	129	0	74	169	0	274	391	0
Turn Type	Perm			Perm			Perm			Perm		
Protected Phases		4			8			2			6	
Permitted Phases	4			8			2			6		
Actuated Green, G (s)	38.9	38.9		38.9	38.9		42.1	42.1		42.1	42.1	
Effective Green, g (s)	39.4	39.4		39.4	39.4		42.6	42.6		42.6	42.6	
Actuated g/C Ratio	0.44	0.44		0.44	0.44		0.47	0.47		0.47	0.47	
Clearance Time (s)	4.5	4.5		4.5	4.5		4.5	4.5		4.5	4.5	
Lane Grp Cap (vph)	500	1508		521	1378		306	844		546	794	
v/s Ratio Prot		0.05			0.04			0.09			0.23	
v/s Ratio Perm	c0.20			0.04			0.11			c0.24		
v/c Ratio	0.46	0.11		0.10	0.09		0.24	0.20		0.50	0.49	
Uniform Delay, d1	17.9	14.9		14.9	14.8		14.1	13.8		16.4	16.3	
Progression Factor	1.00	1.00		0.89	1.47		1.00	1.00		1.00	1.00	
Incremental Delay, d2	3.1	0.1		0.4	0.1		1.9	0.5		3.3	2.2	
Delay (s)	20.9	15.1		13.6	21.9		16.0	14.3		19.6	18.4	
Level of Service	C	B		B	C		B	B		B	B	
Approach Delay (s)		18.4			20.3			14.8			18.9	
Approach LOS		B			C			B			B	

Intersection Summary				
HCM Average Control Delay	18.4	HCM Level of Service	B	
HCM Volume to Capacity ratio	0.48			
Actuated Cycle Length (s)	90.0	Sum of lost time (s)	8.0	
Intersection Capacity Utilization	61.9%	ICU Level of Service	B	
Analysis Period (min)	15			
c Critical Lane Group				

2035 W/ Project AM
54: Civitas & Gill Village Way 1/15/2015

Movement	EBT	EBR	WBL	WBT	NBL	NBR
Lane Configurations						
Ideal Flow (vphpl)	1900	1900	1900	1900	1900	1900
Total Lost time (s)	4.0		4.0	4.0	4.0	4.0
Lane Util. Factor	0.95		1.00	0.95	1.00	1.00
Frt	0.95		1.00	1.00	1.00	0.85
Flt Protected	1.00		0.95	1.00	0.95	1.00
Satd. Flow (prot)	3364		1770	3539	1770	1583
Flt Permitted	1.00		0.49	1.00	0.95	1.00
Satd. Flow (perm)	3364		916	3539	1770	1583
Volume (vph)	275	135	250	180	165	25
Peak-hour factor, PHF	0.95	0.95	0.95	0.95	0.95	0.95
Adj. Flow (vph)	289	142	263	189	174	26
RTOR Reduction (vph)	55	0	0	0	0	18
Lane Group Flow (vph)	376	0	263	189	174	8
Turn Type			Perm			Perm
Protected Phases	4			8	2	
Permitted Phases			8			2
Actuated Green, G (s)	54.7		54.7	54.7	26.3	26.3
Effective Green, g (s)	55.2		55.2	55.2	26.8	26.8
Actuated g/C Ratio	0.61		0.61	0.61	0.30	0.30
Clearance Time (s)	4.5		4.5	4.5	4.5	4.5
Lane Grp Cap (vph)	2063		562	2171	527	471
v/s Ratio Prot	0.11			0.05	c0.10	
v/s Ratio Perm			c0.29			0.00
v/c Ratio	0.18		0.47	0.09	0.33	0.02
Uniform Delay, d1	7.6		9.4	7.1	24.6	22.3
Progression Factor	0.52		1.20	1.07	1.00	1.00
Incremental Delay, d2	0.2		2.8	0.1	1.7	0.1
Delay (s)	4.1		14.1	7.7	26.3	22.4
Level of Service	A		B	A	C	C
Approach Delay (s)	4.1			11.4	25.8	
Approach LOS	A			B	C	

Intersection Summary				
HCM Average Control Delay	11.2	HCM Level of Service	B	
HCM Volume to Capacity ratio	0.42			
Actuated Cycle Length (s)	90.0	Sum of lost time (s)	8.0	
Intersection Capacity Utilization	44.9%	ICU Level of Service	A	
Analysis Period (min)	15			
c Critical Lane Group				

2035 W/ Project AM
55: Via Alta & Mission Center Rd 1/15/2015

Movement	EBL	EBT	EBR	WBL	WBT	WBR	NBL	NBT	NBR	SBL	SBT	SBR
Lane Configurations												
Ideal Flow (vphpl)	1900	1900	1900	1900	1900	1900	1900	1900	1900	1900	1900	1900
Total Lost time (s)		4.0	4.0	4.0	4.0		4.0	4.0	4.0	4.0	4.0	
Lane Util. Factor		1.00	1.00	1.00	1.00		0.97	0.91	1.00	1.00	0.95	
Frt		1.00	0.85	1.00	0.93		1.00	1.00	0.85	1.00	0.99	
Flt Protected		0.98	1.00	0.95	1.00		0.95	1.00	1.00	0.95	1.00	
Satd. Flow (prot)		1830	1583	1770	1730		3433	5085	1583	1770	3489	
Flt Permitted		0.85	1.00	0.64	1.00		0.30	1.00	1.00	0.31	1.00	
Satd. Flow (perm)		1577	1583	1200	1730		1088	5085	1583	586	3489	
Volume (vph)	50	90	165	165	100	90	190	715	89	50	620	65
Peak-hour factor, PHF	0.95	0.95	0.95	0.95	0.95	0.95	0.95	0.95	0.95	0.95	0.95	0.95
Adj. Flow (vph)	53	95	174	174	105	95	200	753	94	53	653	68
RTOR Reduction (vph)	0	0	98	0	31	0	0	0	48	0	8	0
Lane Group Flow (vph)	0	148	76	174	169	0	200	753	46	53	713	0
Turn Type	Perm		Perm	Perm			Perm		Perm	Perm		
Protected Phases		4			8			2			6	
Permitted Phases	4		4	8			2		2	6		
Actuated Green, G (s)		45.3	45.3	45.3	45.3		50.7	50.7	50.7	50.7	50.7	
Effective Green, g (s)		45.8	45.8	45.8	45.8		51.2	51.2	51.2	51.2	51.2	
Actuated g/C Ratio		0.44	0.44	0.44	0.44		0.49	0.49	0.49	0.49	0.49	
Clearance Time (s)		4.5	4.5	4.5	4.5		4.5	4.5	4.5	4.5	4.5	
Lane Grp Cap (vph)		688	690	523	755		531	2480	772	286	1701	
v/s Ratio Prot					0.10			0.15			c0.20	
v/s Ratio Perm		0.09	0.05	c0.15			0.18		0.03	0.09		
v/c Ratio		0.22	0.11	0.33	0.22		0.38	0.30	0.06	0.19	0.42	
Uniform Delay, d1		18.4	17.5	19.5	18.5		16.9	16.2	14.2	15.2	17.3	
Progression Factor		1.00	1.00	1.00	1.00		1.00	1.00	1.00	1.00	1.00	
Incremental Delay, d2		0.7	0.3	1.7	0.7		2.0	0.3	0.1	1.4	0.8	
Delay (s)		19.1	17.9	21.2	19.2		18.9	16.5	14.3	16.6	18.1	
Level of Service		B	B	C	B		B	B	B	B	B	
Approach Delay (s)		18.4			20.1			16.8			18.0	
Approach LOS		B			C			B			B	

Intersection Summary				
HCM Average Control Delay	17.9	HCM Level of Service	B	
HCM Volume to Capacity ratio	0.38			
Actuated Cycle Length (s)	105.0	Sum of lost time (s)	8.0	
Intersection Capacity Utilization	56.2%	ICU Level of Service	B	
Analysis Period (min)	15			
c Critical Lane Group				

2035 W/ Project AM
56: Aquatera Driveway & 1/15/2015

Movement	EBL	EBT	EBR	WBL	WBT	WBR	NBL	NBT	NBR	SBL	SBT	SBR
Lane Configurations												
Ideal Flow (vphpl)	1900	1900	1900	1900	1900	1900	1900	1900	1900	1900	1900	1900
Total Lost time (s)		4.0		4.0	4.0		4.0	4.0	4.0	4.0	4.0	
Lane Util. Factor		1.00		0.95	0.95		1.00	0.95	1.00	1.00	0.95	
Frt		0.90		1.00	0.89		1.00	1.00	0.85	1.00	0.99	
Flt Protected		1.00		0.95	0.99		0.95	1.00	1.00	0.95	1.00	
Satd. Flow (prot)		1671		1681	1551		1770	3539	1583	1770	3490	
Flt Permitted		1.00		0.74	0.97		0.35	1.00	1.00	0.57	1.00	
Satd. Flow (perm)		1671		1316	1518		651	3539	1583	1070	3490	
Volume (vph)	0	5	15	30	0	20	40	260	15	5	535	55
Peak-hour factor, PHF	0.95	0.95	0.95	0.95	0.95	0.95	0.95	0.95	0.95	0.95	0.95	0.95
Adj. Flow (vph)	0	5	16	32	0	21	42	274	16	5	563	58
RTOR Reduction (vph)	0	9	0	0	12	0	0	0	8	0	7	0
Lane Group Flow (vph)	0	12	0	25	16	0	42	274	8	5	614	0
Turn Type	Perm			Perm			Perm		Perm	Perm		
Protected Phases		4			8			2			6	
Permitted Phases	4			8			2		2	6		
Actuated Green, G (s)		46.0		46.0	46.0		50.0	50.0	50.0	50.0	50.0	
Effective Green, g (s)		46.5		46.5	46.5		50.5	50.5	50.5	50.5	50.5	
Actuated g/C Ratio		0.44		0.44	0.44		0.48	0.48	0.48	0.48	0.48	
Clearance Time (s)		4.5		4.5	4.5		4.5	4.5	4.5	4.5	4.5	
Lane Grp Cap (vph)		740		583	672		313	1702	761	515	1679	
v/s Ratio Prot		0.01						0.08			c0.18	
v/s Ratio Perm				c0.02	0.01		0.06		0.00	0.00		
v/c Ratio		0.02		0.04	0.02		0.13	0.16	0.01	0.01	0.37	
Uniform Delay, d1		16.4		16.6	16.5		15.1	15.3	14.2	14.2	17.2	
Progression Factor		1.00		1.00	1.00		1.00	1.00	1.00	1.00	1.00	
Incremental Delay, d2		0.0		0.1	0.1		0.9	0.2	0.0	0.0	0.6	
Delay (s)		16.5		16.8	16.5		16.0	15.5	14.2	14.2	17.8	
Level of Service		B		B	B		B	B	B	B	B	
Approach Delay (s)		16.5			16.6			15.5			17.7	
Approach LOS		B			B			B			B	

Intersection Summary			
HCM Average Control Delay	17.0	HCM Level of Service	B
HCM Volume to Capacity ratio	0.21		
Actuated Cycle Length (s)	105.0	Sum of lost time (s)	8.0
Intersection Capacity Utilization	38.0%	ICU Level of Service	A
Analysis Period (min)	15		

c Critical Lane Group

2035 W/ Project AM
57: Pinecrest & Murray Ridge Rd 1/15/2015

Movement	EBL	EBT	EBR	WBL	WBT	WBR	NBL	NBT	NBR	SBL	SBT	SBR
Lane Configurations												
Ideal Flow (vphpl)	1900	1900	1900	1900	1900	1900	1900	1900	1900	1900	1900	1900
Total Lost time (s)		4.0			4.0		4.0	4.0		4.0	4.0	
Lane Util. Factor		1.00			1.00		1.00	1.00		1.00	1.00	
Frt		0.87			0.96		1.00	1.00		1.00	1.00	
Flt Protected		1.00			0.97		0.95	1.00		0.95	1.00	
Satd. Flow (prot)		1622			1744		1770	1854		1770	1860	
Flt Permitted		1.00			0.80		0.34	1.00		0.29	1.00	
Satd. Flow (perm)		1617			1442		633	1854		545	1860	
Volume (vph)	5	5	175	45	10	20	30	610	20	5	555	5
Peak-hour factor, PHF	0.95	0.95	0.95	0.95	0.95	0.95	0.95	0.95	0.95	0.95	0.95	0.95
Adj. Flow (vph)	5	5	184	47	11	21	32	642	21	5	584	5
RTOR Reduction (vph)	0	130	0	0	15	0	0	1	0	0	0	0
Lane Group Flow (vph)	0	64	0	0	64	0	32	662	0	5	589	0
Turn Type	Perm			Perm			Perm			Perm		
Protected Phases		4			8			2			6	
Permitted Phases	4			8			2			6		
Actuated Green, G (s)		26.1			26.1		54.9	54.9		54.9	54.9	
Effective Green, g (s)		26.6			26.6		55.4	55.4		55.4	55.4	
Actuated g/C Ratio		0.30			0.30		0.62	0.62		0.62	0.62	
Clearance Time (s)		4.5			4.5		4.5	4.5		4.5	4.5	
Lane Grp Cap (vph)		478			426		390	1141		335	1145	
v/s Ratio Prot								c0.36			0.32	
v/s Ratio Perm		0.04			c0.04		0.05			0.01		
v/c Ratio		0.13			0.15		0.08	0.58		0.01	0.51	
Uniform Delay, d1		23.3			23.4		7.0	10.3		6.7	9.7	
Progression Factor		1.00			1.00		1.00	1.00		1.00	1.00	
Incremental Delay, d2		0.6			0.7		0.4	2.2		0.1	1.7	
Delay (s)		23.8			24.1		7.4	12.5		6.8	11.4	
Level of Service		C			C		A	B		A	B	
Approach Delay (s)		23.8			24.1			12.3			11.3	
Approach LOS		C			C			B			B	

Intersection Summary			
HCM Average Control Delay	14.0	HCM Level of Service	B
HCM Volume to Capacity ratio	0.44		
Actuated Cycle Length (s)	90.0	Sum of lost time (s)	8.0
Intersection Capacity Utilization	58.9%	ICU Level of Service	B
Analysis Period (min)	15		

c Critical Lane Group

2035 W/ Project AM
58: Murray Ridge Rd Ave & Sandrock Rd 1/15/2015

Movement	EBL	EBT	EBR	WBL	WBT	WBR	NBL	NBT	NBR	SBL	SBT	SBR
Lane Configurations												
Ideal Flow (vphpl)	1900	1900	1900	1900	1900	1900	1900	1900	1900	1900	1900	1900
Total Lost time (s)	4.0	4.0	4.0		4.0		4.0	4.0		4.0	4.0	
Lane Util. Factor	1.00	1.00	1.00		1.00		1.00	1.00		1.00	1.00	
Frt	1.00	1.00	0.85		0.94		1.00	0.99		1.00	0.93	
Flt Protected	0.95	1.00	1.00		1.00		0.95	1.00		0.95	1.00	
Satd. Flow (prot)	1770	1863	1583		1735		1770	1842		1770	1739	
Flt Permitted	0.58	1.00	1.00		0.98		0.47	1.00		0.30	1.00	
Satd. Flow (perm)	1077	1863	1583		1704		875	1842		557	1739	
Volume (vph)	325	105	75	20	110	120	75	380	30	45	150	120
Peak-hour factor, PHF	0.95	0.95	0.95	0.95	0.95	0.95	0.95	0.95	0.95	0.95	0.95	0.95
Adj. Flow (vph)	342	111	79	21	116	126	79	400	32	47	158	126
RTOR Reduction (vph)	0	0	36	0	37	0	0	3	0	0	32	0
Lane Group Flow (vph)	342	111	43	0	226	0	79	429	0	47	252	0
Turn Type	Perm		Perm	Perm			Perm			Perm		
Protected Phases		4			8			2			6	
Permitted Phases	4		4	8			2			6		
Actuated Green, G (s)	48.1	48.1	48.1		48.1		32.9	32.9		32.9	32.9	
Effective Green, g (s)	48.6	48.6	48.6		48.6		33.4	33.4		33.4	33.4	
Actuated g/C Ratio	0.54	0.54	0.54		0.54		0.37	0.37		0.37	0.37	
Clearance Time (s)	4.5	4.5	4.5		4.5		4.5	4.5		4.5	4.5	
Lane Grp Cap (vph)	582	1006	855		920		325	684		207	645	
v/s Ratio Prot		0.06						c0.23			0.14	
v/s Ratio Perm	c0.32		0.03		0.13		0.09			0.08		
v/c Ratio	0.59	0.11	0.05		0.25		0.24	0.63		0.23	0.39	
Uniform Delay, d1	13.9	10.1	9.8		11.0		19.6	23.2		19.4	20.8	
Progression Factor	1.00	1.00	1.00		1.00		1.00	1.00		1.00	1.00	
Incremental Delay, d2	4.3	0.2	0.1		0.6		1.8	4.3		2.5	1.8	
Delay (s)	18.3	10.3	9.9		11.6		21.3	27.5		22.0	22.6	
Level of Service	B	B	A		B		C	C		C	C	
Approach Delay (s)		15.4			11.6			26.6			22.5	
Approach LOS		B			B			C			C	

Intersection Summary			
HCM Average Control Delay	19.7	HCM Level of Service	B
HCM Volume to Capacity ratio	0.60		
Actuated Cycle Length (s)	90.0	Sum of lost time (s)	8.0
Intersection Capacity Utilization	70.7%	ICU Level of Service	C
Analysis Period (min)	15		

c Critical Lane Group

2035 W/ Project AM
59: Aero Dr & Sandrock Rd 1/15/2015

Movement	EBL	EBT	EBR	WBL	WBT	WBR	NBL	NBT	NBR	SBL	SBT	SBR
Lane Configurations												
Ideal Flow (vphpl)	1900	1900	1900	1900	1900	1900	1900	1900	1900	1900	1900	1900
Total Lost time (s)	4.0	4.0	4.0	4.0	4.0		4.0	4.0	4.0	4.0	4.0	
Lane Util. Factor	1.00	0.95	1.00	1.00	0.95		0.95	0.95	1.00	1.00	1.00	
Frt	1.00	1.00	0.85	1.00	0.99		1.00	1.00	0.85	1.00	0.89	
Flt Protected	0.95	1.00	1.00	0.95	1.00		0.95	0.96	1.00	0.95	1.00	
Satd. Flow (prot)	1770	3539	1583	1770	3501		1681	1699	1583	1770	1650	
Flt Permitted	0.20	1.00	1.00	0.34	1.00		0.95	0.75	1.00	0.45	1.00	
Satd. Flow (perm)	378	3539	1583	629	3501		1316	1323	1583	842	1650	
Volume (vph)	46	600	175	90	770	60	590	60	175	20	5	15
Peak-hour factor, PHF	0.95	0.95	0.95	0.95	0.95	0.95	0.95	0.95	0.95	0.95	0.95	0.95
Adj. Flow (vph)	48	632	184	95	811	63	621	63	184	21	5	16
RTOR Reduction (vph)	0	0	116	0	11	0	0	0	96	0	8	0
Lane Group Flow (vph)	48	632	68	95	863	0	311	373	88	21	13	0
Turn Type	Perm		Perm	Perm			Perm		Perm	Perm		
Protected Phases		4			8			2			6	
Permitted Phases	4		4	8			2		2	6		
Actuated Green, G (s)	19.2	19.2	19.2	19.2	19.2		24.8	24.8	24.8	24.8	24.8	
Effective Green, g (s)	19.7	19.7	19.7	19.7	19.7		25.3	25.3	25.3	25.3	25.3	
Actuated g/C Ratio	0.37	0.37	0.37	0.37	0.37		0.48	0.48	0.48	0.48	0.48	
Clearance Time (s)	4.5	4.5	4.5	4.5	4.5		4.5	4.5	4.5	4.5	4.5	
Vehicle Extension (s)	3.0	3.0	3.0	3.0	3.0		3.0	3.0	3.0	3.0	3.0	
Lane Grp Cap (vph)	141	1315	588	234	1301		628	632	756	402	788	
v/s Ratio Prot		0.18			c0.25						0.01	
v/s Ratio Perm	0.13		0.04	0.15			0.24	c0.28	0.06	0.02		
v/c Ratio	0.34	0.48	0.12	0.41	0.66		0.50	0.59	0.12	0.05	0.02	
Uniform Delay, d1	12.0	12.7	10.9	12.3	13.9		9.5	10.1	7.7	7.4	7.3	
Progression Factor	1.00	1.00	1.00	1.00	1.00		1.00	1.00	1.00	1.00	1.00	
Incremental Delay, d2	1.4	0.3	0.1	1.2	1.3		0.6	1.5	0.1	0.1	0.0	
Delay (s)	13.4	13.0	11.0	13.5	15.2		10.1	11.6	7.7	7.5	7.3	
Level of Service	B	B	B	B	B		B	B	A	A	A	
Approach Delay (s)		12.6			15.0			10.2			7.4	
Approach LOS		B			B			B			A	

Intersection Summary			
HCM Average Control Delay	12.6	HCM Level of Service	B
HCM Volume to Capacity ratio	0.62		
Actuated Cycle Length (s)	53.0	Sum of lost time (s)	8.0
Intersection Capacity Utilization	61.1%	ICU Level of Service	B
Analysis Period (min)	15		

c Critical Lane Group

2035 W/Project PM
4: Friars Rd EB Ramps & Mission Center Rd 1/15/2015

Movement	EBL	EBT	EBR	WBL	WBT	WBR	NBL	NBT	NBR	SBL	SBT	SBR
Lane Configurations												
Ideal Flow (vphpl)	1900	1900	1900	1900	1900	1900	1900	1900	1900	1900	1900	1900
Lane Width	14	12	13	12	12	12	12	13	12	15	16	12
Total Lost time (s)	4.0	4.0	4.0					4.0		4.0	4.0	
Lane Util. Factor	0.95	0.95	1.00					0.95		0.97	0.95	
Frpb, ped/bikes	1.00	1.00	1.00					1.00		1.00	1.00	
Flpb, ped/bikes	1.00	1.00	1.00					1.00		1.00	1.00	
Frt	1.00	1.00	0.85					0.98		1.00	1.00	
Flt Protected	0.95	0.95	1.00					1.00		0.95	1.00	
Satd. Flow (prot)	1793	1681	1636					3573		3776	4011	
Flt Permitted	0.95	0.95	1.00					1.00		0.95	1.00	
Satd. Flow (perm)	1793	1681	1636					3573		3776	4011	
Volume (vph)	500	0	285	0	0	0	0	775	140	515	830	0
Peak-hour factor, PHF	0.95	0.95	0.95	0.95	0.95	0.95	0.95	0.95	0.95	0.95	0.95	0.95
Adj. Flow (vph)	526	0	300	0	0	0	0	816	147	542	874	0
RTOR Reduction (vph)	0	0	140	0	0	0	0	16	0	0	0	0
Lane Group Flow (vph)	265	261	160	0	0	0	0	947	0	542	874	0
Confl. Peds. (#/hr)												
Turn Type	Split		Perm							Prot		
Protected Phases	4	4						2		1	6	
Permitted Phases			4									
Actuated Green, G (s)	16.0	16.0	16.0					24.4		14.8	43.0	
Effective Green, g (s)	16.9	16.9	16.9					25.4		15.2	44.6	
Actuated g/C Ratio	0.24	0.24	0.24					0.37		0.22	0.64	
Clearance Time (s)	4.9	4.9	4.9					5.0		4.4	5.6	
Vehicle Extension (s)	3.0	3.0	3.0					3.0		3.0	3.0	
Lane Grp Cap (vph)	436	409	398					1306		826	2574	
v/s Ratio Prot	0.15	c0.16						c0.26		c0.14	0.22	
v/s Ratio Perm			0.10									
v/c Ratio	0.61	0.64	0.40					0.72		0.66	0.34	
Uniform Delay, d1	23.4	23.6	22.1					19.0		24.8	5.7	
Progression Factor	1.00	1.00	1.00					1.00		1.00	1.00	
Incremental Delay, d2	2.4	3.3	0.7					2.0		1.9	0.1	
Delay (s)	25.8	26.8	22.7					21.1		26.7	5.8	
Level of Service	C	C	C					C		C	A	
Approach Delay (s)		25.0			0.0			21.1			13.8	
Approach LOS		C			A			C			B	

Intersection Summary				
HCM Average Control Delay	18.9	HCM Level of Service	B	
HCM Volume to Capacity ratio	0.68			
Actuated Cycle Length (s)	69.5	Sum of lost time (s)	12.0	
Intersection Capacity Utilization	108.0%	ICU Level of Service	G	
Analysis Period (min)	15			
c Critical Lane Group				

2035 W/Project PM
5: Friars Rd WB Ramps & Mission Center Rd 1/15/2015

Movement	EBL	EBT	EBR	WBL	WBT	WBR	NBL	NBT	NBR	SBL	SBT	SBR
Lane Configurations												
Ideal Flow (vphpl)	1900	1900	1900	1900	1900	1900	1900	1900	1900	1900	1900	1900
Lane Width	12	12	12	15	12	15	10	12	12	12	14	11
Total Lost time (s)				4.0	4.0	4.0	4.0	4.0			4.0	4.0
Lane Util. Factor				0.95	0.95	1.00	0.97	0.95			0.95	1.00
Frpb, ped/bikes				1.00	1.00	1.00	1.00	1.00			1.00	1.00
Flpb, ped/bikes				1.00	1.00	1.00	1.00	1.00			1.00	1.00
Frt				1.00	1.00	0.85	1.00	1.00			1.00	0.85
Flt Protected				0.95	0.95	1.00	0.95	1.00			1.00	1.00
Satd. Flow (prot)				1849	1681	1742	3204	3539			3775	1531
Flt Permitted				0.95	0.95	1.00	0.95	1.00			1.00	1.00
Satd. Flow (perm)				1849	1681	1742	3204	3539			3775	1531
Volume (vph)	0	0	0	190	0	515	290	990	0	0	1155	210
Peak-hour factor, PHF	0.95	0.95	0.95	0.95	0.95	0.95	0.95	0.95	0.95	0.95	0.95	0.95
Adj. Flow (vph)	0	0	0	200	0	542	305	1042	0	0	1216	221
RTOR Reduction (vph)	0	0	0	0	0	61	0	0	0	0	0	84
Lane Group Flow (vph)	0	0	0	102	98	481	305	1042	0	0	1216	137
Confl. Peds. (#/hr)												
Turn Type				Split		Perm	Prot					Perm
Protected Phases				8	8		5	2			6	
Permitted Phases						8						6
Actuated Green, G (s)				25.4	25.4	25.4	10.5	45.7			29.8	29.8
Effective Green, g (s)				26.3	26.3	26.3	10.9	46.7			31.8	31.8
Actuated g/C Ratio				0.32	0.32	0.32	0.13	0.58			0.39	0.39
Clearance Time (s)				4.9	4.9	4.9	4.4	5.0			6.0	6.0
Vehicle Extension (s)				3.0	3.0	3.0	3.0	3.0			3.0	3.0
Lane Grp Cap (vph)				600	546	566	431	2040			1482	601
v/s Ratio Prot				0.06	0.06		c0.10	0.29			c0.32	
v/s Ratio Perm					c0.28							0.09
v/c Ratio				0.17	0.18	0.85	0.71	0.51			0.82	0.23
Uniform Delay, d1				19.5	19.6	25.5	33.5	10.3			22.0	16.4
Progression Factor				1.00	1.00	1.00	1.00	1.00			1.00	1.00
Incremental Delay, d2				0.1	0.2	11.7	5.2	0.2			3.8	0.2
Delay (s)				19.7	19.8	37.2	38.8	10.5			25.8	16.6
Level of Service				B	B	D	D	B			C	B
Approach Delay (s)		0.0			32.5			16.9			24.4	
Approach LOS		A			C			B			C	

Intersection Summary				
HCM Average Control Delay	23.2	HCM Level of Service	C	
HCM Volume to Capacity ratio	0.81			
Actuated Cycle Length (s)	81.0	Sum of lost time (s)	12.0	
Intersection Capacity Utilization	108.0%	ICU Level of Service	G	
Analysis Period (min)	15			
c Critical Lane Group				

2035 W/Project PM
7: Friars Rd EB Ramps & Qualcomm Wy 1/15/2015

Movement	EBL	EBT	EBR	WBL	WBT	WBR	NBL	NBT	NBR	SBL	SBT	SBR
Lane Configurations												
Ideal Flow (vphpl)	1900	1900	1900	1900	1900	1900	1900	1900	1900	1900	1900	1900
Lane Width	12	11	14	12	12	12	12	12	15	12	12	12
Total Lost time (s)		4.0	4.0					4.0	4.0	4.0	4.0	
Lane Util. Factor		1.00	1.00					0.95	1.00	1.00	0.95	
Frpb, ped/bikes		1.00	1.00					1.00	1.00	1.00	1.00	
Flpb, ped/bikes		1.00	1.00					1.00	1.00	1.00	1.00	
Frt		1.00	0.85					1.00	0.85	1.00	1.00	
Flt Protected		0.95	1.00					1.00	1.00	0.95	1.00	
Satd. Flow (prot)		1711	1689					3539	1742	1770	3539	
Flt Permitted		0.95	1.00					1.00	1.00	0.95	1.00	
Satd. Flow (perm)		1711	1689					3539	1742	1770	3539	
Volume (vph)	450	0	205	0	0	0	0	1380	635	480	890	0
Peak-hour factor, PHF	0.95	0.95	0.95	0.95	0.95	0.95	0.95	0.95	0.95	0.95	0.95	0.95
Adj. Flow (vph)	474	0	216	0	0	0	0	1453	668	505	937	0
RTOR Reduction (vph)	0	0	129	0	0	0	0	0	247	0	0	0
Lane Group Flow (vph)	0	474	87	0	0	0	0	1453	421	505	937	0
Confl. Peds. (#/hr)												
Turn Type	Split		Perm						Perm	Prot		
Protected Phases	4	4						2		1	6	
Permitted Phases			4						2			
Actuated Green, G (s)		35.1	35.1					53.9	53.9	36.6	95.1	
Effective Green, g (s)		36.0	36.0					55.0	55.0	37.0	96.0	
Actuated g/C Ratio		0.26	0.26					0.39	0.39	0.26	0.69	
Clearance Time (s)		4.9	4.9					5.1	5.1	4.4	4.9	
Vehicle Extension (s)		3.0	3.0					3.0	3.0	3.0	3.0	
Lane Grp Cap (vph)		440	434					1390	684	468	2427	
v/s Ratio Prot		c0.28						c0.41		c0.29	0.26	
v/s Ratio Perm			0.05						0.24			
v/c Ratio		1.08	0.20					1.05	0.62	1.08	0.39	
Uniform Delay, d1		52.0	40.7					42.5	34.0	51.5	9.4	
Progression Factor		1.00	1.00					1.00	1.00	0.46	2.41	
Incremental Delay, d2		65.2	0.2					36.9	4.1	39.8	0.0	
Delay (s)		117.2	40.9					79.4	38.1	63.7	22.7	
Level of Service		F	D					E	D	E	C	
Approach Delay (s)		93.3			0.0			66.4			37.1	
Approach LOS		F			A			E			D	

Intersection Summary				
HCM Average Control Delay	60.8	HCM Level of Service	E	
HCM Volume to Capacity ratio	1.06			
Actuated Cycle Length (s)	140.0	Sum of lost time (s)	12.0	
Intersection Capacity Utilization	128.5%	ICU Level of Service	H	
Analysis Period (min)	15			
c Critical Lane Group				

2035 W/Project PM
8: Friars Rd WB Ramps & Qualcomm Wy 1/15/2015

Movement	EBL	EBT	EBR	WBL	WBT	WBR	NBL	NBT	NBR	SBL	SBT	SBR
Lane Configurations												
Ideal Flow (vphpl)	1900	1900	1900	1900	1900	1900	1900	1900	1900	1900	1900	1900
Lane Width	12	12	12	12	16	12	12	11	12	12	16	16
Total Lost time (s)				4.0	4.0		4.0	4.0			4.0	
Lane Util. Factor				0.95	0.95		1.00	1.00			0.95	
Frpb, ped/bikes				1.00	1.00		1.00	1.00			1.00	
Flpb, ped/bikes				1.00	1.00		1.00	1.00			1.00	
Frt				1.00	0.86		1.00	1.00			0.97	
Flt Protected				0.95	1.00		0.95	1.00			1.00	
Satd. Flow (prot)				1681	1721		1770	1801			3878	
Flt Permitted				0.95	1.00		0.95	1.00			1.00	
Satd. Flow (perm)				1681	1721		1770	1801			3878	
Volume (vph)	0	0	0	415	0	360	785	1045	0	0	950	270
Peak-hour factor, PHF	0.95	0.95	0.95	0.95	0.95	0.95	0.95	0.95	0.95	0.95	0.95	0.95
Adj. Flow (vph)	0	0	0	437	0	379	826	1100	0	0	1000	284
RTOR Reduction (vph)	0	0	0	0	121	0	0	0	0	0	18	0
Lane Group Flow (vph)	0	0	0	405	290	0	826	1100	0	0	1266	0
Confl. Peds. (#/hr)												
Turn Type				Split			Prot					
Protected Phases				8	8		5	2			6	
Permitted Phases												
Actuated Green, G (s)				28.0	28.0		57.2	102.0			40.1	
Effective Green, g (s)				28.9	28.9		58.1	103.1			41.0	
Actuated g/C Ratio				0.21	0.21		0.42	0.74			0.29	
Clearance Time (s)				4.9	4.9		4.9	5.1			4.9	
Vehicle Extension (s)				3.0	3.0		3.0	3.0			3.0	
Lane Grp Cap (vph)				347	355		735	1326			1136	
v/s Ratio Prot				c0.24	0.17		c0.47	0.61			c0.33	
v/s Ratio Perm												
v/c Ratio				1.17	0.82		1.12	0.83			1.11	
Uniform Delay, d1				55.5	53.0		41.0	12.5			49.5	
Progression Factor				1.00	1.00		0.58	0.45			1.00	
Incremental Delay, d2				101.9	13.4		57.6	0.6			63.8	
Delay (s)				157.5	66.5		81.2	6.3			113.3	
Level of Service				F	E		F	A			F	
Approach Delay (s)		0.0			111.6			38.4			113.3	
Approach LOS		A			F			D			F	

Intersection Summary				
HCM Average Control Delay	77.1	HCM Level of Service	E	
HCM Volume to Capacity ratio	1.13			
Actuated Cycle Length (s)	140.0	Sum of lost time (s)	12.0	
Intersection Capacity Utilization	128.5%	ICU Level of Service	H	
Analysis Period (min)	15			
c Critical Lane Group				

Movement	EBT	EBR	WBL	WBT	NBL	NBR
Lane Configurations						
Ideal Flow (vphpl)	1900	1900	1900	1900	1900	1900
Total Lost time (s)	4.0	4.0	4.0	4.0	4.0	4.0
Lane Util. Factor	0.95	1.00	0.97	1.00	0.97	1.00
Frt	1.00	0.85	1.00	1.00	1.00	0.85
Flt Protected	1.00	1.00	0.95	1.00	0.95	1.00
Satd. Flow (prot)	3539	1583	3433	1863	3433	1583
Flt Permitted	1.00	1.00	0.51	1.00	0.95	1.00
Satd. Flow (perm)	3539	1583	1835	1863	3433	1583
Volume (vph)	350	325	625	315	645	655
Peak-hour factor, PHF	0.95	0.95	0.95	0.95	0.95	0.95
Adj. Flow (vph)	368	342	658	332	679	689
RTOR Reduction (vph)	0	186	0	0	0	209
Lane Group Flow (vph)	368	156	658	332	679	480
Turn Type		Perm	Perm			Perm
Protected Phases	4			8	2	
Permitted Phases		4	8			2
Actuated Green, G (s)	40.5	40.5	40.5	40.5	40.5	40.5
Effective Green, g (s)	41.0	41.0	41.0	41.0	41.0	41.0
Actuated g/C Ratio	0.46	0.46	0.46	0.46	0.46	0.46
Clearance Time (s)	4.5	4.5	4.5	4.5	4.5	4.5
Lane Grp Cap (vph)	1612	721	836	849	1564	721
v/s Ratio Prot	0.10			0.18	0.20	
v/s Ratio Perm		0.10	c0.36			c0.30
v/c Ratio	0.23	0.22	0.79	0.39	0.43	0.67
Uniform Delay, d1	14.9	14.8	20.8	16.2	16.6	19.1
Progression Factor	0.97	1.36	1.00	1.00	1.00	1.00
Incremental Delay, d2	0.3	0.7	7.4	1.4	0.9	4.8
Delay (s)	14.7	20.7	28.2	17.6	17.5	24.0
Level of Service	B	C	C	B	B	C
Approach Delay (s)	17.6			24.6	20.8	
Approach LOS	B			C	C	

Intersection Summary			
HCM Average Control Delay	21.3	HCM Level of Service	C
HCM Volume to Capacity ratio	0.73		
Actuated Cycle Length (s)	90.0	Sum of lost time (s)	8.0
Intersection Capacity Utilization	56.9%	ICU Level of Service	B
Analysis Period (min)	15		

c Critical Lane Group

Movement	EBL	EBT	EBR	WBL	WBT	WBR	NBL	NBT	NBR	SBL	SBT	SBR
Lane Configurations												
Ideal Flow (vphpl)	1900	1900	1900	1900	1900	1900	1900	1900	1900	1900	1900	1900
Lane Width	14	12	12	10	12	12	12	11	13	12	15	10
Total Lost time (s)	4.0	4.0		4.0	4.0			4.0	4.0		4.0	
Lane Util. Factor	1.00	0.91		1.00	0.91			1.00	1.00		1.00	
Frt	1.00	0.99		1.00	1.00			1.00	0.85		0.96	
Flt Protected	0.95	1.00		0.95	1.00			0.96	1.00		0.97	
Satd. Flow (prot)	1888	5054		1652	5067			1725	1636		1898	
Flt Permitted	0.95	1.00		0.95	1.00			0.72	1.00		0.78	
Satd. Flow (perm)	1888	5054		1652	5067			1288	1636		1520	
Volume (vph)	25	2725	115	65	1460	35	35	5	135	165	5	80
Peak-hour factor, PHF	0.95	0.95	0.95	0.95	0.95	0.95	0.95	0.95	0.95	0.95	0.95	0.95
Adj. Flow (vph)	26	2868	121	68	1537	37	37	5	142	174	5	84
RTOR Reduction (vph)	0	3	0	0	2	0	0	0	53	0	12	0
Lane Group Flow (vph)	26	2986	0	68	1572	0	0	42	89	0	251	0
Turn Type	Prot			Prot			Perm		Perm	Perm		
Protected Phases	5	2		1	6			8			4	
Permitted Phases							8		8	4		
Actuated Green, G (s)	3.0	83.7		6.3	87.0			24.6	24.6		24.6	
Effective Green, g (s)	3.4	85.9		6.7	89.2			25.5	25.5		25.5	
Actuated g/C Ratio	0.03	0.66		0.05	0.69			0.20	0.20		0.20	
Clearance Time (s)	4.4	6.2		4.4	6.2			4.9	4.9		4.9	
Vehicle Extension (s)	3.0	3.0		3.0	3.0			3.0	3.0		3.0	
Lane Grp Cap (vph)	49	3337		85	3474			252	321		298	
v/s Ratio Prot	0.01	c0.59		c0.04	c0.31							
v/s Ratio Perm								0.03	0.05		c0.17	
v/c Ratio	0.53	0.89		0.80	0.45			0.17	0.28		0.84	
Uniform Delay, d1	62.6	18.3		61.0	9.3			43.5	44.5		50.4	
Progression Factor	1.00	1.00		1.00	1.00			1.00	1.00		1.00	
Incremental Delay, d2	10.6	3.5		39.9	0.1			0.3	0.5		18.9	
Delay (s)	73.2	21.9		100.9	9.4			43.8	44.9		69.3	
Level of Service	E	C		F	A			D	D		E	
Approach Delay (s)		22.3			13.2			44.7			69.3	
Approach LOS		C			B			D			E	

Intersection Summary			
HCM Average Control Delay	22.6	HCM Level of Service	C
HCM Volume to Capacity ratio	0.90		
Actuated Cycle Length (s)	130.1	Sum of lost time (s)	16.0
Intersection Capacity Utilization	87.9%	ICU Level of Service	E
Analysis Period (min)	15		

c Critical Lane Group

Movement	EBL	EBT	EBR	WBL	WBT	WBR	NBL	NBT	NBR	SBL	SBT	SBR
Lane Configurations												
Ideal Flow (vphpl)	1900	1900	1900	1900	1900	1900	1900	1900	1900	1900	1900	1900
Lane Width	12	12	14	10	12	12	9	12	16	12	12	12
Total Lost time (s)	4.0	4.0	4.0	4.0	4.0	4.0	4.0	4.0	4.0	4.0	4.0	4.0
Lane Util. Factor	1.00	0.91	1.00	0.97	0.91	1.00	0.97	1.00	1.00	0.97	0.95	0.95
Frpb, ped/bikes	1.00	1.00	1.00	1.00	1.00	1.00	1.00	1.00	1.00	1.00	1.00	1.00
Flpb, ped/bikes	1.00	1.00	1.00	1.00	1.00	1.00	1.00	1.00	1.00	1.00	1.00	1.00
Frt	1.00	1.00	0.85	1.00	1.00	0.85	1.00	1.00	0.85	1.00	0.92	0.85
Flt Protected	0.95	1.00	1.00	0.95	1.00	1.00	0.95	1.00	1.00	0.95	1.00	1.00
Satd. Flow (prot)	1770	5085	1689	3204	5085	1583	3090	1863	1794	3433	1626	1504
Flt Permitted	0.95	1.00	1.00	0.95	1.00	1.00	0.95	1.00	1.00	0.95	1.00	1.00
Satd. Flow (perm)	1770	5085	1689	3204	5085	1583	3090	1863	1794	3433	1626	1504
Volume (vph)	175	2470	400	200	1270	80	205	20	285	20	10	45
Peak-hour factor, PHF	0.95	0.95	0.95	0.95	0.95	0.95	0.95	0.95	0.95	0.95	0.95	0.95
Adj. Flow (vph)	184	2600	421	211	1337	84	216	21	300	21	11	47
RTOR Reduction (vph)	0	0	114	0	0	37	0	0	146	0	11	5
Lane Group Flow (vph)	184	2600	307	211	1337	47	216	21	154	21	13	29
Confl. Peds. (#/hr)												
Turn Type	Prot		pm+ov	Prot		pm+ov	Prot		Perm	Prot		pm+ov
Protected Phases	5	2	3	1	6	7	3	8		7	4	5
Permitted Phases			2			6			8			4
Actuated Green, G (s)	19.4	81.3	93.5	12.7	74.6	78.7	12.2	27.0	27.0	4.1	18.9	38.3
Effective Green, g (s)	19.8	83.5	96.1	13.1	76.8	81.3	12.6	27.9	27.9	4.5	19.8	39.6
Actuated g/C Ratio	0.14	0.58	0.66	0.09	0.53	0.56	0.09	0.19	0.19	0.03	0.14	0.27
Clearance Time (s)	4.4	6.2	4.4	4.4	6.2	4.4	4.4	4.9	4.9	4.4	4.9	4.4
Vehicle Extension (s)	3.0	3.0	3.0	3.0	3.0	3.0	3.0	3.0	3.0	3.0	3.0	3.0
Lane Grp Cap (vph)	242	2928	1166	289	2693	931	269	358	345	107	222	452
v/s Ratio Prot	c0.10	c0.51	0.02	0.07	0.26	0.00	c0.07	0.01		0.01	0.01	0.01
v/s Ratio Perm			0.16			0.03			c0.09			0.01
v/c Ratio	0.76	0.89	0.26	0.73	0.50	0.05	0.80	0.06	0.45	0.20	0.06	0.06
Uniform Delay, d1	60.3	26.7	10.0	64.2	21.8	14.4	65.0	47.8	51.7	68.5	54.5	39.0
Progression Factor	1.00	1.00	1.00	1.00	1.00	1.00	1.00	1.00	1.00	1.00	1.00	1.00
Incremental Delay, d2	13.1	4.5	0.1	9.1	0.7	0.0	15.7	0.1	0.9	0.9	0.1	0.1
Delay (s)	73.4	31.2	10.1	73.3	22.4	14.4	80.7	47.9	52.6	69.4	54.6	39.0
Level of Service	E	C	B	E	C	B	F	D	D	E	D	D
Approach Delay (s)		30.8			28.6			63.8			51.8	
Approach LOS		C			C			E			D	

Intersection Summary			
HCM Average Control Delay	33.7	HCM Level of Service	C
HCM Volume to Capacity ratio	0.77		
Actuated Cycle Length (s)	145.0	Sum of lost time (s)	8.0
Intersection Capacity Utilization	78.7%	ICU Level of Service	D
Analysis Period (min)	15		

c Critical Lane Group

Movement	EBL	EBT	EBR	WBL	WBT	WBR	NBL	NBT	NBR	SBL	SBT	SBR
Lane Configurations												
Ideal Flow (vphpl)	1900	1900	1900	1900	1900	1900	1900	1900	1900	1900	1900	1900
Lane Width	10	12	16	10	13	12	11	16	12	11	15	12
Total Lost time (s)	4.0	4.0	4.0	4.0	4.0	4.0	4.0	4.0	4.0	4.0	4.0	4.0
Lane Util. Factor	0.97	0.91	1.00	0.97	0.91	1.00	0.97	1.00	1.00	0.97	1.00	1.00
Frpb, ped/bikes	1.00	1.00	1.00	1.00	1.00	1.00	1.00	1.00	1.00	1.00	1.00	1.00
Flpb, ped/bikes	1.00	1.00	1.00	1.00	1.00	1.00	1.00	1.00	1.00	1.00	1.00	1.00
Frt	1.00	1.00	0.85	1.00	1.00	0.85	1.00	1.00	0.85	1.00	1.00	0.85
Flt Protected	0.95	1.00	1.00	0.95	1.00	1.00	0.95	1.00	1.00	0.95	1.00	1.00
Satd. Flow (prot)	3204	5085	1794	3204	5255	1583	3319	2111	1583	3319	2049	1583
Flt Permitted	0.95	1.00	1.00	0.95	1.00	1.00	0.95	1.00	1.00	0.95	1.00	1.00
Satd. Flow (perm)	3204	5085	1794	3204	5255	1583	3319	2111	1583	3319	2049	1583
Volume (vph)	230	2280	245	565	1270	160	185	30	685	65	20	80
Peak-hour factor, PHF	0.95	0.95	0.95	0.95	0.95	0.95	0.95	0.95	0.95	0.95	0.95	0.95
Adj. Flow (vph)	242	2400	258	595	1337	168	195	32	721	68	21	84
RTOR Reduction (vph)	0	0	86	0	0	61	0	0	1	0	0	75
Lane Group Flow (vph)	242	2400	172	595	1337	107	195	32	720	68	21	9
Confl. Peds. (#/hr)												
Turn Type	Prot		Perm	Prot		pm+ov	Prot		pm+ov	Prot		Perm
Protected Phases	5	2		1	6	7	3	8	1	7	4	
Permitted Phases			2			6			8			4
Actuated Green, G (s)	14.0	61.5	61.5	23.9	71.2	80.1	11.9	16.2	40.1	8.9	13.2	13.2
Effective Green, g (s)	14.4	63.5	63.5	24.3	73.4	82.7	12.3	17.1	41.4	9.3	14.1	14.1
Actuated g/C Ratio	0.11	0.49	0.49	0.19	0.56	0.64	0.09	0.13	0.32	0.07	0.11	0.11
Clearance Time (s)	4.4	6.0	6.0	4.4	6.2	4.4	4.4	4.9	4.4	4.4	4.9	4.9
Vehicle Extension (s)	3.0	3.0	3.0	3.0	3.0	3.0	3.0	3.0	3.0	3.0	3.0	3.0
Lane Grp Cap (vph)	354	2480	875	598	2962	1054	314	277	552	237	222	171
v/s Ratio Prot	0.08	c0.47		0.19	0.25	0.01	c0.06	0.02	c0.24	0.02	0.01	
v/s Ratio Perm			0.10			0.06			0.21			0.01
v/c Ratio	0.68	0.97	0.20	0.99	0.45	0.10	0.62	0.12	1.30	0.29	0.09	0.05
Uniform Delay, d1	55.7	32.4	18.9	52.9	16.6	9.3	56.7	49.9	44.4	57.3	52.3	52.1
Progression Factor	1.00	1.00	1.00	1.00	1.00	1.00	1.00	1.00	1.00	1.00	1.00	1.00
Incremental Delay, d2	5.4	11.4	0.1	35.3	0.1	0.0	3.8	0.2	149.5	0.7	0.2	0.1
Delay (s)	61.1	43.8	19.0	88.2	16.7	9.3	60.5	50.1	193.9	58.0	52.5	52.2
Level of Service	E	D	B	F	B	A	E	D	F	E	D	D
Approach Delay (s)		43.0			36.4			161.6			54.5	
Approach LOS		D			D			F			D	

Intersection Summary			
HCM Average Control Delay	59.4	HCM Level of Service	E
HCM Volume to Capacity ratio	1.08		
Actuated Cycle Length (s)	130.2	Sum of lost time (s)	12.0
Intersection Capacity Utilization	99.8%	ICU Level of Service	F
Analysis Period (min)	15		

c Critical Lane Group

Movement	EBL	EBT	EBR	WBL	WBT	WBR	NBL	NBT	NBR	SBL	SBT	SBR
Lane Configurations												
Ideal Flow (vphpl)	1900	1900	1900	1900	1900	1900	1900	1900	1900	1900	1900	1900
Lane Width	12	10	12	12	16	12	12	16	12	12	16	12
Total Lost time (s)		4.0	4.0		4.0		4.0	4.0		4.0	4.0	4.0
Lane Util. Factor		1.00	1.00		1.00		1.00	1.00		1.00	1.00	1.00
Frpb, ped/bikes		1.00	1.00		1.00		1.00	1.00		1.00	1.00	1.00
Flpb, ped/bikes		1.00	1.00		1.00		1.00	1.00		1.00	1.00	1.00
Frt		1.00	0.85		1.00		1.00	0.98		1.00	1.00	0.85
Flt Protected		0.97	1.00		0.97		0.95	1.00		0.95	1.00	1.00
Satd. Flow (prot)		1678	1583		2034		1770	2069		1770	2111	1583
Flt Permitted		0.97	1.00		0.97		0.95	1.00		0.95	1.00	1.00
Satd. Flow (perm)		1678	1583		2034		1770	2069		1770	2111	1583
Volume (vph)	250	95	495	100	45	5	250	620	95	20	500	215
Peak-hour factor, PHF	0.95	0.95	0.95	0.95	0.95	0.95	0.95	0.95	0.95	0.95	0.95	0.95
Adj. Flow (vph)	263	100	521	105	47	5	263	653	100	21	526	226
RTOR Reduction (vph)	0	0	290	0	1	0	0	5	0	0	0	55
Lane Group Flow (vph)	0	363	231	0	156	0	263	748	0	21	526	171
Confl. Peds. (#/hr)												
Turn Type	Split		Perm	Split			Prot			Prot		Perm
Protected Phases	4	4		3	3		5	2		1	6	
Permitted Phases			4									6
Actuated Green, G (s)		22.4	22.4		12.5		14.7	40.9		1.5	27.7	27.7
Effective Green, g (s)		23.7	23.7		13.4		15.1	41.8		1.9	28.6	28.6
Actuated g/C Ratio		0.24	0.24		0.14		0.16	0.43		0.02	0.30	0.30
Clearance Time (s)		5.3	5.3		4.9		4.4	4.9		4.4	4.9	4.9
Vehicle Extension (s)		3.5	3.5		2.0		2.0	3.9		2.0	3.9	3.9
Lane Grp Cap (vph)		411	388		282		276	893		35	624	468
v/s Ratio Prot		c0.22			c0.08		c0.15	c0.36		0.01	0.25	
v/s Ratio Perm			0.15									0.11
v/c Ratio		0.88	0.60		0.55		0.95	0.84		0.60	0.84	0.37
Uniform Delay, d1		35.2	32.3		38.9		40.5	24.5		47.1	32.0	26.9
Progression Factor		1.00	1.00		1.00		1.00	1.00		1.00	1.00	1.00
Incremental Delay, d2		19.9	2.6		1.3		40.9	7.2		17.1	10.4	0.6
Delay (s)		55.1	34.9		40.2		81.4	31.7		64.1	42.4	27.6
Level of Service		E	C		D		F	C		E	D	C
Approach Delay (s)		43.2			40.2			44.6			38.7	
Approach LOS		D			D			D			D	

Intersection Summary			
HCM Average Control Delay	42.3	HCM Level of Service	D
HCM Volume to Capacity ratio	0.81		
Actuated Cycle Length (s)	96.8	Sum of lost time (s)	12.0
Intersection Capacity Utilization	75.2%	ICU Level of Service	D
Analysis Period (min)	15		
c Critical Lane Group			

Movement	EBL	EBT	EBR	WBL	WBT	WBR	NBL	NBT	NBR	SBL	SBT	SBR
Lane Configurations												
Ideal Flow (vphpl)	1900	1900	1900	1900	1900	1900	1900	1900	1900	1900	1900	1900
Lane Width	12	12	16	12	12	12	10	12	12	12	12	12
Total Lost time (s)	4.0	4.0	4.0	4.0	4.0		4.0	4.0	4.0	4.0	4.0	
Lane Util. Factor	1.00	1.00	1.00	0.97	1.00		0.97	0.95	1.00	1.00	0.95	
Frpb, ped/bikes	1.00	1.00	1.00	1.00	1.00		1.00	1.00	1.00	1.00	1.00	
Flpb, ped/bikes	1.00	1.00	1.00	1.00	1.00		1.00	1.00	1.00	1.00	1.00	
Frt	1.00	1.00	0.85	1.00	0.95		1.00	1.00	0.85	1.00	0.98	
Flt Protected	0.95	1.00	1.00	0.95	1.00		0.95	1.00	1.00	0.95	1.00	
Satd. Flow (prot)	1770	1863	1794	3433	1776		3204	3539	1583	1770	3477	
Flt Permitted	0.95	1.00	1.00	0.95	1.00		0.95	1.00	1.00	0.95	1.00	
Satd. Flow (perm)	1770	1863	1794	3433	1776		3204	3539	1583	1770	3477	
Volume (vph)	300	135	380	285	100	45	170	385	560	45	450	60
Peak-hour factor, PHF	0.95	0.95	0.95	0.95	0.95	0.95	0.95	0.95	0.95	0.95	0.95	0.95
Adj. Flow (vph)	316	142	400	300	105	47	179	405	589	47	474	63
RTOR Reduction (vph)	0	0	287	0	18	0	0	0	360	0	10	0
Lane Group Flow (vph)	316	142	113	300	134	0	179	405	229	47	527	0
Confl. Peds. (#/hr)												
Turn Type	Prot		Perm	Prot			Prot		Perm	Prot		
Protected Phases	7	4		3	8		5	2		1	6	
Permitted Phases		4	4		8			2	2		6	
Actuated Green, G (s)	17.7	16.6	16.6	11.9	10.8		16.7	31.5	31.5	4.8	19.6	
Effective Green, g (s)	18.1	17.5	17.5	12.3	11.7		17.1	32.5	32.5	5.2	20.6	
Actuated g/C Ratio	0.22	0.21	0.21	0.15	0.14		0.20	0.39	0.39	0.06	0.25	
Clearance Time (s)	4.4	4.9	4.9	4.4	4.9		4.4	5.0	5.0	4.4	5.0	
Vehicle Extension (s)	3.0	3.0	3.0	3.0	3.0		3.0	3.0	3.0	3.0	3.0	
Lane Grp Cap (vph)	384	390	376	506	249		656	1377	616	110	858	
v/s Ratio Prot	c0.18	0.08		0.09	c0.08		0.06	0.11		c0.03	c0.15	
v/s Ratio Perm			0.06						c0.14			
v/c Ratio	0.82	0.36	0.30	0.59	0.54		0.27	0.29	0.37	0.43	0.61	
Uniform Delay, d1	31.2	28.2	27.8	33.3	33.4		28.0	17.6	18.2	37.7	27.9	
Progression Factor	1.00	1.00	1.00	1.00	1.00		1.00	1.00	1.00	1.00	1.00	
Incremental Delay, d2	13.3	0.6	0.5	1.9	2.2		1.0	0.1	0.4	2.7	1.3	
Delay (s)	44.5	28.8	28.3	35.1	35.6		29.0	17.7	18.6	40.4	29.2	
Level of Service	D	C	C	D	D		C	B	B	D	C	
Approach Delay (s)		34.3			35.3			19.9			30.1	
Approach LOS		C			D			B			C	

Intersection Summary			
HCM Average Control Delay	28.1	HCM Level of Service	C
HCM Volume to Capacity ratio	0.62		
Actuated Cycle Length (s)	83.5	Sum of lost time (s)	20.0
Intersection Capacity Utilization	57.2%	ICU Level of Service	B
Analysis Period (min)	15		
c Critical Lane Group			

Movement	EBL	EBT	EBR	WBL	WBT	WBR	NBL	NBT	NBR	SBL	SBT	SBR
Lane Configurations												
Ideal Flow (vphpl)	1900	1900	1900	1900	1900	1900	1900	1900	1900	1900	1900	1900
Lane Width	10	12	16	12	12	12	11	12	12	10	12	12
Total Lost time (s)		4.0			4.0		4.0	4.0		4.0	4.0	
Lane Util. Factor		1.00			1.00		1.00	0.95		1.00	0.95	
Frt		0.91			0.93		1.00	0.99		1.00	0.99	
Flt Protected		0.99			0.98		0.95	1.00		0.95	1.00	
Satd. Flow (prot)		1668			1695		1711	3488		1652	3512	
Flt Permitted		0.99			0.98		0.95	1.00		0.95	1.00	
Satd. Flow (perm)		1668			1695		1711	3488		1652	3512	
Volume (vph)	55	5	125	90	5	100	80	850	90	185	1095	60
Peak-hour factor, PHF	0.95	0.95	0.95	0.95	0.95	0.95	0.95	0.95	0.95	0.95	0.95	0.95
Adj. Flow (vph)	58	5	132	95	5	105	84	895	95	195	1153	63
RTOR Reduction (vph)	0	88	0	0	37	0	0	6	0	0	3	0
Lane Group Flow (vph)	0	107	0	0	168	0	84	984	0	195	1213	0
Turn Type	Split			Split			Prot			Prot		
Protected Phases	4	4		3	3		5	2		1	6	
Permitted Phases												
Actuated Green, G (s)		12.5			12.3		5.7	33.4		6.1	33.9	
Effective Green, g (s)		12.5			12.3		5.7	34.7		6.1	35.1	
Actuated g/C Ratio		0.15			0.15		0.07	0.43		0.07	0.43	
Clearance Time (s)		4.0			4.0		4.0	5.3		4.0	5.2	
Vehicle Extension (s)		3.0			3.0		3.0	3.0		3.0	3.0	
Lane Grp Cap (vph)		256			255		120	1483		123	1511	
v/s Ratio Prot		c0.06			c0.10		0.05	0.28		c0.12	c0.35	
v/s Ratio Perm												
v/c Ratio		0.42			0.66		0.70	0.66		1.59	0.80	
Uniform Delay, d1		31.3			32.7		37.1	18.8		37.8	20.2	
Progression Factor		1.00			1.00		1.00	1.00		1.00	1.00	
Incremental Delay, d2		1.1			6.3		16.4	1.1		298.4	3.2	
Delay (s)		32.4			39.0		53.5	19.9		336.2	23.4	
Level of Service		C			D		D	B		F	C	
Approach Delay (s)		32.4			39.0			22.5			66.6	
Approach LOS		C			D			C			E	

Intersection Summary			
HCM Average Control Delay	45.9	HCM Level of Service	D
HCM Volume to Capacity ratio	0.73		
Actuated Cycle Length (s)	81.6	Sum of lost time (s)	12.0
Intersection Capacity Utilization	65.0%	ICU Level of Service	C
Analysis Period (min)	15		
c Critical Lane Group			

Movement	EBL	EBT	EBR	WBL	WBT	WBR	NBL	NBT	NBR	SBL	SBT	SBR
Lane Configurations												
Ideal Flow (vphpl)	1900	1900	1900	1900	1900	1900	1900	1900	1900	1900	1900	1900
Lane Width	12	12	12	16	12	16	12	16	12	12	16	11
Total Lost time (s)					4.0	4.0	4.0	4.0			4.0	
Lane Util. Factor					1.00	1.00	1.00	1.00			0.95	
Frpb, ped/bikes					1.00	1.00	1.00	1.00			1.00	
Flpb, ped/bikes					1.00	1.00	1.00	1.00			1.00	
Frt					1.00	0.85	1.00	1.00			0.94	
Flt Protected					0.95	1.00	0.95	1.00			1.00	
Satd. Flow (prot)					1770	1794	1770	2111			3780	
Flt Permitted					0.95	1.00	0.95	1.00			1.00	
Satd. Flow (perm)					1770	1794	1770	2111			3780	
Volume (vph)	0	0	0	485	0	675	1035	350	0	0	675	420
Peak-hour factor, PHF	0.95	0.95	0.95	0.95	0.95	0.95	0.95	0.95	0.95	0.95	0.95	0.95
Adj. Flow (vph)	0	0	0	511	0	711	1089	368	0	0	711	442
RTOR Reduction (vph)	0	0	0	0	0	394	0	0	0	0	69	0
Lane Group Flow (vph)	0	0	0	0	511	317	1089	368	0	0	1084	0
Confl. Peds. (#/hr)												
Turn Type				Perm		Perm	Prot					
Protected Phases					6		3	8			4	
Permitted Phases				6		6						
Actuated Green, G (s)					33.5	33.5	61.5	97.5			31.5	
Effective Green, g (s)					34.0	34.0	62.0	98.0			32.0	
Actuated g/C Ratio					0.24	0.24	0.44	0.70			0.23	
Clearance Time (s)					4.5	4.5	4.5	4.5			4.5	
Vehicle Extension (s)					3.0	3.0	3.0	3.0			3.0	
Lane Grp Cap (vph)					430	436	784	1478			864	
v/s Ratio Prot							c0.62	0.17			c0.29	
v/s Ratio Perm					0.29	0.18						
v/c Ratio					1.19	0.73	1.39	0.25			1.26	
Uniform Delay, d1					53.0	48.7	39.0	7.6			54.0	
Progression Factor					1.00	1.00	1.00	1.00			1.00	
Incremental Delay, d2					105.9	6.0	182.9	0.1			124.2	
Delay (s)					158.9	54.7	221.9	7.7			178.2	
Level of Service					F	D	F	A			F	
Approach Delay (s)		0.0			98.3			167.8			178.2	
Approach LOS		A			F			F			F	

Intersection Summary			
HCM Average Control Delay	148.8	HCM Level of Service	F
HCM Volume to Capacity ratio	1.30		
Actuated Cycle Length (s)	140.0	Sum of lost time (s)	12.0
Intersection Capacity Utilization	151.5%	ICU Level of Service	H
Analysis Period (min)	15		
c Critical Lane Group			

2035 W/Project PM
24: I-805 SB Ramps & Murray Ridge Rd 1/15/2015

Movement	EBL	EBT	EBR	WBL	WBT	WBR	NBL	NBT	NBR	SBL	SBT	SBR
Lane Configurations												
Ideal Flow (vphpl)	1900	1900	1900	1900	1900	1900	1900	1900	1900	1900	1900	1900
Lane Width	12	14	12	12	12	12	12	16	12	12	15	12
Total Lost time (s)		4.0	4.0					4.0		4.0	4.0	
Lane Util. Factor		1.00	1.00					1.00		1.00	1.00	
Frpb, ped/bikes		1.00	1.00					1.00		1.00	1.00	
Flpb, ped/bikes		1.00	1.00					1.00		1.00	1.00	
Frt		1.00	0.85					0.95		1.00	1.00	
Flt Protected		0.95	1.00					1.00		0.95	1.00	
Satd. Flow (prot)		1888	1583					2006		1770	2049	
Flt Permitted		0.95	1.00					1.00		0.95	1.00	
Satd. Flow (perm)		1888	1583					2006		1770	2049	
Volume (vph)	310	0	1160	0	0	0	0	1070	620	545	610	0
Peak-hour factor, PHF	0.95	0.95	0.95	0.95	0.95	0.95	0.95	0.95	0.95	0.95	0.95	0.95
Adj. Flow (vph)	326	0	1221	0	0	0	0	1126	653	574	642	0
RTOR Reduction (vph)	0	0	216	0	0	0	0	14	0	0	0	0
Lane Group Flow (vph)	0	326	1005	0	0	0	0	1765	0	574	642	0
Confl. Peds. (#/hr)												
Turn Type	Perm		Perm							Prot		
Protected Phases		4						2		1	6	
Permitted Phases	4		4									
Actuated Green, G (s)		43.0	43.0					68.7		23.8	96.7	
Effective Green, g (s)		44.0	44.0					70.0		24.0	98.0	
Actuated g/C Ratio		0.29	0.29					0.47		0.16	0.65	
Clearance Time (s)		5.0	5.0					5.3		4.2	5.3	
Vehicle Extension (s)		3.0	3.0					3.0		3.0	3.0	
Lane Grp Cap (vph)		554	464					936		283	1339	
v/s Ratio Prot								c0.88		c0.32	0.31	
v/s Ratio Perm		0.17	c0.64									
v/c Ratio		0.59	2.17					1.89		2.03	0.48	
Uniform Delay, d1		45.3	53.0					40.0		63.0	13.1	
Progression Factor		1.00	1.00					1.00		1.00	1.00	
Incremental Delay, d2		1.6	532.2					402.7		474.9	0.3	
Delay (s)		46.9	585.2					442.7		537.9	13.4	
Level of Service		D	F					F		F	B	
Approach Delay (s)		471.8			0.0			442.7			261.0	
Approach LOS		F			A			F			F	

Intersection Summary			
HCM Average Control Delay	404.0	HCM Level of Service	F
HCM Volume to Capacity ratio	2.00		
Actuated Cycle Length (s)	150.0	Sum of lost time (s)	12.0
Intersection Capacity Utilization	151.5%	ICU Level of Service	H
Analysis Period (min)	15		
c Critical Lane Group			

2035 W/Project PM
25: Rio San Diego Drive & Qualcomm Wy 1/15/2015

Movement	EBL	EBT	EBR	WBL	WBT	WBR	NBL	NBT	NBR	SBL	SBT	SBR
Lane Configurations												
Ideal Flow (vphpl)	1900	1900	1900	1900	1900	1900	1900	1900	1900	1900	1900	1900
Lane Width	12	12	14	12	12	12	10	12	12	12	12	12
Total Lost time (s)	4.0	4.0	4.0	4.0	4.0	4.0	4.0	4.0		4.0	4.0	
Lane Util. Factor	0.97	1.00	1.00	0.97	0.95	1.00	0.97	0.91		0.97	0.91	
Frpb, ped/bikes	1.00	1.00	1.00	1.00	1.00	1.00	1.00	1.00		1.00	1.00	
Flpb, ped/bikes	1.00	1.00	1.00	1.00	1.00	1.00	1.00	1.00		1.00	1.00	
Frt	1.00	1.00	0.85	1.00	1.00	0.85	1.00	0.96		1.00	0.96	
Flt Protected	0.95	1.00	1.00	0.95	1.00	1.00	0.95	1.00		0.95	1.00	
Satd. Flow (prot)	3433	1863	1689	3433	3539	1583	3204	4874		3433	4864	
Flt Permitted	0.95	1.00	1.00	0.66	1.00	1.00	0.95	1.00		0.12	1.00	
Satd. Flow (perm)	3433	1863	1689	2384	3539	1583	3204	4874		433	4864	
Volume (vph)	395	145	355	625	200	415	285	1120	430	290	540	220
Peak-hour factor, PHF	0.95	0.95	0.95	0.95	0.95	0.95	0.95	0.95	0.95	0.95	0.95	0.95
Adj. Flow (vph)	416	153	374	658	211	437	300	1179	453	305	568	232
RTOR Reduction (vph)	0	0	187	0	0	83	0	40	0	0	49	0
Lane Group Flow (vph)	416	153	187	658	211	354	300	1592	0	305	751	0
Confl. Peds. (#/hr)												
Turn Type	Prot		pm+ov	Perm		Perm	Prot			Perm		
Protected Phases	5	2	3		6		3	8			4	
Permitted Phases			2	6		6				4		
Actuated Green, G (s)	9.6	48.9	57.5	35.0	35.0	35.0	8.6	90.7		77.7	77.7	
Effective Green, g (s)	10.0	50.0	59.0	36.0	36.0	36.0	9.0	92.0		79.0	79.0	
Actuated g/C Ratio	0.07	0.33	0.39	0.24	0.24	0.24	0.06	0.61		0.53	0.53	
Clearance Time (s)	4.4	5.1	4.4	5.0	5.0	5.0	4.4	5.3		5.3	5.3	
Vehicle Extension (s)	3.0	3.0	3.0	3.0	3.0	3.0	3.0	3.0		3.0	3.0	
Lane Grp Cap (vph)	229	621	709	572	849	380	192	2989		228	2562	
v/s Ratio Prot	c0.12	0.08	0.02		0.06		c0.09	0.33			0.15	
v/s Ratio Perm			0.09	c0.28		0.22				c0.70		
v/c Ratio	1.82	0.25	0.26	1.15	0.25	0.93	1.56	0.53		1.34	0.29	
Uniform Delay, d1	70.0	36.3	30.8	57.0	46.1	55.8	70.5	16.7		35.5	19.9	
Progression Factor	1.00	1.00	1.00	1.00	1.00	1.00	1.00	1.00		1.00	1.00	
Incremental Delay, d2	384.2	0.2	0.2	86.5	0.2	29.4	276.9	0.2		178.6	0.1	
Delay (s)	454.2	36.5	31.0	143.5	46.2	85.2	347.4	16.8		214.1	19.9	
Level of Service	F	D	C	F	D	F	F	B		F	B	
Approach Delay (s)		218.6			108.3			68.2			73.5	
Approach LOS		F			F			E			E	

Intersection Summary			
HCM Average Control Delay	106.0	HCM Level of Service	F
HCM Volume to Capacity ratio	1.34		
Actuated Cycle Length (s)	150.0	Sum of lost time (s)	16.0
Intersection Capacity Utilization	78.3%	ICU Level of Service	D
Analysis Period (min)	15		
c Critical Lane Group			

2035 W/Project PM
26: Rio San Diego Drive & Rio Bonito Wy 1/15/2015

Movement	EBL	EBT	EBR	WBL	WBT	WBR	NBL	NBT	NBR	SBL	SBT	SBR
Lane Configurations												
Ideal Flow (vphpl)	1900	1900	1900	1900	1900	1900	1900	1900	1900	1900	1900	1900
Total Lost time (s)	4.0	4.0		4.0	4.0			4.0		4.0	4.0	
Lane Util. Factor	1.00	0.95		1.00	0.95			1.00		1.00	1.00	
Frt	1.00	1.00		1.00	1.00			0.98		1.00	0.85	
Flt Protected	0.95	1.00		0.95	1.00			0.97		0.95	1.00	
Satd. Flow (prot)	1770	3526		1770	3522			1759		1770	1593	
Flt Permitted	0.25	1.00		0.34	1.00			0.73		0.66	1.00	
Satd. Flow (perm)	474	3526		626	3522			1333		1222	1593	
Volume (vph)	45	600	15	10	750	25	111	26	30	205	5	140
Peak-hour factor, PHF	0.95	0.95	0.95	0.95	0.95	0.95	0.95	0.95	0.95	0.95	0.95	0.95
Adj. Flow (vph)	47	632	16	11	789	26	117	27	32	216	5	147
RTOR Reduction (vph)	0	2	0	0	3	0	0	9	0	0	65	0
Lane Group Flow (vph)	47	646	0	11	812	0	0	167	0	216	87	0
Turn Type	Perm			Perm			Perm			Perm		
Protected Phases		4			8			2			6	
Permitted Phases	4			8			2			6		
Actuated Green, G (s)	41.6	41.6		41.6	41.6			39.4		39.4	39.4	
Effective Green, g (s)	42.1	42.1		42.1	42.1			39.9		39.9	39.9	
Actuated g/C Ratio	0.47	0.47		0.47	0.47			0.44		0.44	0.44	
Clearance Time (s)	4.5	4.5		4.5	4.5			4.5		4.5	4.5	
Lane Grp Cap (vph)	222	1649		293	1648			591		542	706	
v/s Ratio Prot		0.18			c0.23						0.05	
v/s Ratio Perm	0.10			0.02				0.13		c0.18		
v/c Ratio	0.21	0.39		0.04	0.49			0.28		0.40	0.12	
Uniform Delay, d1	14.1	15.6		13.0	16.6			15.9		16.9	14.7	
Progression Factor	1.00	1.00		1.00	1.00			1.00		1.00	1.00	
Incremental Delay, d2	2.2	0.7		0.2	1.1			1.2		2.2	0.4	
Delay (s)	16.3	16.3		13.2	17.6			17.1		19.1	15.1	
Level of Service	B	B		B	B			B		B	B	
Approach Delay (s)		16.3			17.6			17.1			17.5	
Approach LOS		B			B			B			B	

Intersection Summary			
HCM Average Control Delay	17.1	HCM Level of Service	B
HCM Volume to Capacity ratio	0.45		
Actuated Cycle Length (s)	90.0	Sum of lost time (s)	8.0
Intersection Capacity Utilization	58.9%	ICU Level of Service	B
Analysis Period (min)	15		
c Critical Lane Group			

2035 W/Project PM
50: Phyllis Pl & 1/22/2015

Movement	EBT	EBR	WBL	WBT	NBL	NBR
Lane Configurations						
Ideal Flow (vphpl)	1900	1900	1900	1900	1900	1900
Total Lost time (s)	4.0		4.0	4.0	4.0	4.0
Lane Util. Factor	0.95		0.97	1.00	1.00	0.88
Frt	0.96		1.00	1.00	1.00	0.85
Flt Protected	1.00		0.95	1.00	0.95	1.00
Satd. Flow (prot)	3414		3433	1863	1770	2787
Flt Permitted	1.00		0.95	1.00	0.95	1.00
Satd. Flow (perm)	3414		3433	1863	1770	2787
Volume (vph)	145	45	1675	105	20	1540
Peak-hour factor, PHF	0.95	0.95	0.95	0.95	0.95	0.95
Adj. Flow (vph)	153	47	1763	111	21	1621
RTOR Reduction (vph)	35	0	0	0	0	171
Lane Group Flow (vph)	165	0	1763	111	21	1450
Turn Type			Prot			pm+ov
Protected Phases	4		3	8	2	3
Permitted Phases						2
Actuated Green, G (s)	9.3		44.5	58.3	16.0	60.5
Effective Green, g (s)	9.8		45.0	58.8	16.5	61.5
Actuated g/C Ratio	0.12		0.54	0.71	0.20	0.74
Clearance Time (s)	4.5		4.5	4.5	4.5	4.5
Vehicle Extension (s)	3.0		3.0	3.0	3.0	3.0
Lane Grp Cap (vph)	402		1855	1315	351	2191
v/s Ratio Prot	c0.05		c0.51	0.06	0.01	c0.36
v/s Ratio Perm						0.16
v/c Ratio	0.41		0.95	0.08	0.06	0.66
Uniform Delay, d1	34.1		18.1	3.8	27.1	5.6
Progression Factor	1.00		1.00	1.00	1.00	1.00
Incremental Delay, d2	0.7		11.3	0.0	0.3	0.8
Delay (s)	34.8		29.4	3.9	27.4	6.3
Level of Service	C		C	A	C	A
Approach Delay (s)	34.8			27.9	6.6	
Approach LOS	C			C	A	

Intersection Summary			
HCM Average Control Delay	18.9	HCM Level of Service	B
HCM Volume to Capacity ratio	0.82		
Actuated Cycle Length (s)	83.3	Sum of lost time (s)	12.0
Intersection Capacity Utilization	66.6%	ICU Level of Service	C
Analysis Period (min)	15		
c Critical Lane Group			

2035 W/Project PM
51: Via Alta & 1/22/2015

Movement	EBL	EBT	EBR	WBL	WBT	WBR	NBL	NBT	NBR	SBL	SBT	SBR
Lane Configurations												
Ideal Flow (vphpl)	1900	1900	1900	1900	1900	1900	1900	1900	1900	1900	1900	1900
Total Lost time (s)	4.0	4.0			4.0		4.0	4.0		4.0	4.0	4.0
Lane Util. Factor	1.00	1.00			1.00		1.00	1.00		1.00	1.00	1.00
Frt	1.00	0.87			0.97		1.00	1.00		1.00	1.00	0.85
Flt Protected	0.95	1.00			0.99		0.95	1.00		0.95	1.00	1.00
Satd. Flow (prot)	1770	1622			1782		1770	1857		1770	1863	1583
Flt Permitted	0.95	1.00			0.99		0.95	1.00		0.95	1.00	1.00
Satd. Flow (perm)	1770	1622			1782		1770	1857		1770	1863	1583
Volume (vph)	610	10	65	5	10	5	65	895	20	10	915	795
Peak-hour factor, PHF	0.95	0.95	0.95	0.95	0.95	0.95	0.95	0.95	0.95	0.95	0.95	0.95
Adj. Flow (vph)	642	11	68	5	11	5	68	942	21	11	963	837
RTOR Reduction (vph)	0	48	0	0	5	0	0	0	0	0	0	220
Lane Group Flow (vph)	642	31	0	0	16	0	68	963	0	11	963	617
Turn Type	Split			Split			Prot			Prot		Perm
Protected Phases	4	4		8	8		5	2		1	6	
Permitted Phases												6
Actuated Green, G (s)	39.6	39.6			4.5		16.0	72.9		1.5	58.4	58.4
Effective Green, g (s)	40.1	40.1			5.0		16.5	73.4		2.0	58.9	58.9
Actuated g/C Ratio	0.29	0.29			0.04		0.12	0.54		0.01	0.43	0.43
Clearance Time (s)	4.5	4.5			4.5		4.5	4.5		4.5	4.5	4.5
Vehicle Extension (s)	3.0	3.0			3.0		3.0	3.0		3.0	3.0	3.0
Lane Grp Cap (vph)	520	476			65		214	999		26	804	683
v/s Ratio Prot	c0.36	0.02			c0.01		c0.04	c0.52		0.01	c0.52	
v/s Ratio Perm												0.39
v/c Ratio	1.23	0.07			0.25		0.32	0.96		0.42	1.20	0.90
Uniform Delay, d1	48.2	34.7			63.9		54.9	30.3		66.7	38.8	36.1
Progression Factor	1.00	1.00			1.00		1.00	1.00		1.00	1.00	1.00
Incremental Delay, d2	121.4	0.1			2.0		3.9	20.9		10.7	100.9	15.3
Delay (s)	169.6	34.8			65.9		58.7	51.2		77.4	139.7	51.5
Level of Service	F	C			E		E	D		E	F	D
Approach Delay (s)		154.8			65.9			51.7			98.6	
Approach LOS		F			E			D			F	

Intersection Summary			
HCM Average Control Delay	96.2	HCM Level of Service	F
HCM Volume to Capacity ratio	1.15		
Actuated Cycle Length (s)	136.5	Sum of lost time (s)	20.0
Intersection Capacity Utilization	101.1%	ICU Level of Service	G
Analysis Period (min)	15		

c Critical Lane Group

2035 W/Project PM
53: Civitas & Via Alta 1/15/2015

Movement	EBL	EBT	EBR	WBL	WBT	WBR	NBL	NBT	NBR	SBL	SBT	SBR
Lane Configurations												
Ideal Flow (vphpl)	1900	1900	1900	1900	1900	1900	1900	1900	1900	1900	1900	1900
Total Lost time (s)	4.0	4.0		4.0	4.0		4.0	4.0		4.0	4.0	
Lane Util. Factor	1.00	0.95		1.00	0.95		1.00	1.00		1.00	1.00	
Frt	1.00	0.96		1.00	0.88		1.00	0.97		1.00	0.94	
Flt Protected	0.95	1.00		0.95	1.00		0.95	1.00		0.95	1.00	
Satd. Flow (prot)	1770	3400		1770	3131		1770	1801		1770	1753	
Flt Permitted	0.36	1.00		0.50	1.00		0.37	1.00		0.46	1.00	
Satd. Flow (perm)	664	3400		924	3131		689	1801		851	1753	
Volume (vph)	295	280	100	175	140	465	45	230	65	285	225	145
Peak-hour factor, PHF	0.95	0.95	0.95	0.95	0.95	0.95	0.95	0.95	0.95	0.95	0.95	0.95
Adj. Flow (vph)	311	295	105	184	147	489	47	242	68	300	237	153
RTOR Reduction (vph)	0	40	0	0	239	0	0	11	0	0	26	0
Lane Group Flow (vph)	311	360	0	184	397	0	47	299	0	300	364	0
Turn Type	Perm			Perm			Perm			Perm		
Protected Phases		4			8			2			6	
Permitted Phases	4			8			2			6		
Actuated Green, G (s)	45.5	45.5		45.5	45.5		35.5	35.5		35.5	35.5	
Effective Green, g (s)	46.0	46.0		46.0	46.0		36.0	36.0		36.0	36.0	
Actuated g/C Ratio	0.51	0.51		0.51	0.51		0.40	0.40		0.40	0.40	
Clearance Time (s)	4.5	4.5		4.5	4.5		4.5	4.5		4.5	4.5	
Lane Grp Cap (vph)	339	1738		472	1600		276	720		340	701	
v/s Ratio Prot		0.11			0.13			0.17			0.21	
v/s Ratio Perm	c0.47			0.20			0.07			c0.35		
v/c Ratio	0.92	0.21		0.39	0.25		0.17	0.41		0.88	0.52	
Uniform Delay, d1	20.3	12.0		13.4	12.3		17.4	19.4		25.0	20.4	
Progression Factor	1.00	1.00		0.73	1.43		1.00	1.00		1.00	1.00	
Incremental Delay, d2	31.8	0.3		2.0	0.3		1.3	1.8		26.5	2.7	
Delay (s)	52.0	12.3		11.8	18.0		18.7	21.2		51.5	23.2	
Level of Service	D	B		B	B		B	C		D	C	
Approach Delay (s)		29.7			16.6			20.9			35.5	
Approach LOS		C			B			C			D	

Intersection Summary			
HCM Average Control Delay	25.9	HCM Level of Service	C
HCM Volume to Capacity ratio	0.90		
Actuated Cycle Length (s)	90.0	Sum of lost time (s)	8.0
Intersection Capacity Utilization	80.4%	ICU Level of Service	D
Analysis Period (min)	15		

c Critical Lane Group

2035 W/Project PM
54: Civitas & Gill Village Way 1/15/2015

Movement	EBT	EBR	WBL	WBT	NBL	NBR
Lane Configurations						
Ideal Flow (vphpl)	1900	1900	1900	1900	1900	1900
Total Lost time (s)	4.0		4.0	4.0	4.0	4.0
Lane Util. Factor	0.95		1.00	0.95	1.00	1.00
Frt	0.96		1.00	1.00	1.00	0.85
Flt Protected	1.00		0.95	1.00	0.95	1.00
Satd. Flow (prot)	3390		1770	3539	1770	1583
Flt Permitted	1.00		0.35	1.00	0.95	1.00
Satd. Flow (perm)	3390		652	3539	1770	1583
Volume (vph)	460	180	290	290	495	200
Peak-hour factor, PHF	0.95	0.95	0.95	0.95	0.95	0.95
Adj. Flow (vph)	484	189	305	305	521	211
RTOR Reduction (vph)	46	0	0	0	0	136
Lane Group Flow (vph)	627	0	305	305	521	75
Turn Type			Perm			Perm
Protected Phases	4			8	2	
Permitted Phases			8			2
Actuated Green, G (s)	49.5		49.5	49.5	31.5	31.5
Effective Green, g (s)	50.0		50.0	50.0	32.0	32.0
Actuated g/C Ratio	0.56		0.56	0.56	0.36	0.36
Clearance Time (s)	4.5		4.5	4.5	4.5	4.5
Lane Grp Cap (vph)	1883		362	1966	629	563
v/s Ratio Prot	0.19			0.09	c0.29	
v/s Ratio Perm			c0.47			0.05
v/c Ratio	0.33		0.84	0.16	0.83	0.13
Uniform Delay, d1	10.9		16.7	9.7	26.5	19.6
Progression Factor	0.68		0.99	0.84	1.00	1.00
Incremental Delay, d2	0.4		19.3	0.2	12.0	0.5
Delay (s)	7.8		35.8	8.3	38.4	20.1
Level of Service	A		D	A	D	C
Approach Delay (s)	7.8			22.1	33.2	
Approach LOS	A			C	C	

Intersection Summary			
HCM Average Control Delay	21.3	HCM Level of Service	C
HCM Volume to Capacity ratio	0.84		
Actuated Cycle Length (s)	90.0	Sum of lost time (s)	8.0
Intersection Capacity Utilization	72.0%	ICU Level of Service	C
Analysis Period (min)	15		

c Critical Lane Group

2035 W/Project PM
55: Via Alta & Mission Center Rd 1/15/2015

Movement	EBL	EBT	EBR	WBL	WBT	WBR	NBL	NBT	NBR	SBL	SBT	SBR
Lane Configurations												
Ideal Flow (vphpl)	1900	1900	1900	1900	1900	1900	1900	1900	1900	1900	1900	1900
Total Lost time (s)		4.0	4.0	4.0	4.0		4.0	4.0	4.0	4.0	4.0	
Lane Util. Factor		1.00	1.00	1.00	1.00		0.97	0.91	1.00	1.00	0.95	
Frt		1.00	0.85	1.00	0.92		1.00	1.00	0.85	1.00	0.99	
Flt Protected		0.98	1.00	0.95	1.00		0.95	1.00	1.00	0.95	1.00	
Satd. Flow (prot)		1827	1583	1770	1717		3433	5085	1583	1770	3508	
Flt Permitted		0.73	1.00	0.51	1.00		0.25	1.00	1.00	0.26	1.00	
Satd. Flow (perm)		1351	1583	942	1717		910	5085	1583	476	3508	
Volume (vph)	90	140	415	220	110	120	360	900	250	145	800	50
Peak-hour factor, PHF	0.95	0.95	0.95	0.95	0.95	0.95	0.95	0.95	0.95	0.95	0.95	0.95
Adj. Flow (vph)	95	147	437	232	116	126	379	947	263	153	842	53
RTOR Reduction (vph)	0	0	97	0	37	0	0	0	115	0	4	0
Lane Group Flow (vph)	0	242	340	232	205	0	379	947	148	153	891	0
Turn Type	Perm		Perm	Perm			Perm		Perm	Perm		
Protected Phases		4			8			2			6	
Permitted Phases	4		4	8			2		2	6		
Actuated Green, G (s)		37.5	37.5	37.5	37.5		58.5	58.5	58.5	58.5	58.5	
Effective Green, g (s)		38.0	38.0	38.0	38.0		59.0	59.0	59.0	59.0	59.0	
Actuated g/C Ratio		0.36	0.36	0.36	0.36		0.56	0.56	0.56	0.56	0.56	
Clearance Time (s)		4.5	4.5	4.5	4.5		4.5	4.5	4.5	4.5	4.5	
Lane Grp Cap (vph)		489	573	341	621		511	2857	889	267	1971	
v/s Ratio Prot					0.12			0.19			0.25	
v/s Ratio Perm		0.18	0.21	c0.25			c0.42		0.09	0.32		
v/c Ratio		0.49	0.59	0.68	0.33		0.74	0.33	0.17	0.57	0.45	
Uniform Delay, d1		26.0	27.2	28.4	24.3		17.3	12.4	11.1	14.9	13.5	
Progression Factor		1.00	1.00	1.00	1.00		1.00	1.00	1.00	1.00	1.00	
Incremental Delay, d2		3.6	4.5	10.5	1.4		9.4	0.3	0.4	8.7	0.8	
Delay (s)		29.6	31.7	38.8	25.7		26.6	12.7	11.5	23.5	14.3	
Level of Service		C	C	D	C		C	B	B	C	B	
Approach Delay (s)		30.9			32.1			15.8			15.6	
Approach LOS		C			C			B			B	

Intersection Summary			
HCM Average Control Delay	20.5	HCM Level of Service	C
HCM Volume to Capacity ratio	0.72		
Actuated Cycle Length (s)	105.0	Sum of lost time (s)	8.0
Intersection Capacity Utilization	72.8%	ICU Level of Service	C
Analysis Period (min)	15		

c Critical Lane Group

Movement	EBL	EBT	EBR	WBL	WBT	WBR	NBL	NBT	NBR	SBL	SBT	SBR
Lane Configurations												
Ideal Flow (vphpl)	1900	1900	1900	1900	1900	1900	1900	1900	1900	1900	1900	1900
Total Lost time (s)		4.0		4.0	4.0		4.0	4.0	4.0	4.0	4.0	
Lane Util. Factor		1.00		0.95	0.95		1.00	0.95	1.00	1.00	0.95	
Frt		0.93		1.00	0.85		1.00	1.00	0.85	1.00	0.99	
Flt Protected		0.98		0.95	1.00		0.95	1.00	1.00	0.95	1.00	
Satd. Flow (prot)		1695		1681	1504		1770	3539	1583	1770	3500	
Flt Permitted		0.88		0.73	1.00		0.39	1.00	1.00	0.33	1.00	
Satd. Flow (perm)		1536		1294	1504		726	3539	1583	614	3500	
Volume (vph)	35	0	35	20	0	15	25	650	55	20	500	40
Peak-hour factor, PHF	0.95	0.95	0.95	0.95	0.95	0.95	0.95	0.95	0.95	0.95	0.95	0.95
Adj. Flow (vph)	37	0	37	21	0	16	26	684	58	21	526	42
RTOR Reduction (vph)	0	22	0	0	10	0	0	0	28	0	6	0
Lane Group Flow (vph)	0	52	0	21	6	0	26	684	30	21	562	0
Turn Type	Perm			Perm			Perm		Perm	Perm		
Protected Phases		4			8			2			6	
Permitted Phases	4			8			2		2	6		
Actuated Green, G (s)		42.0		42.0	42.0		54.0	54.0	54.0	54.0	54.0	
Effective Green, g (s)		42.5		42.5	42.5		54.5	54.5	54.5	54.5	54.5	
Actuated g/C Ratio		0.40		0.40	0.40		0.52	0.52	0.52	0.52	0.52	
Clearance Time (s)		4.5		4.5	4.5		4.5	4.5	4.5	4.5	4.5	
Lane Grp Cap (vph)		622		524	609		377	1837	822	319	1817	
v/s Ratio Prot								c0.19			0.16	
v/s Ratio Perm		c0.03		0.02	0.00		0.04		0.02	0.03		
v/c Ratio		0.08		0.04	0.01		0.07	0.37	0.04	0.07	0.31	
Uniform Delay, d1		19.3		18.9	18.7		12.6	15.1	12.4	12.6	14.5	
Progression Factor		1.00		1.00	1.00		1.00	1.00	1.00	1.00	1.00	
Incremental Delay, d2		0.3		0.1	0.0		0.4	0.6	0.1	0.4	0.4	
Delay (s)		19.5		19.1	18.7		12.9	15.6	12.5	13.0	14.9	
Level of Service		B		B	B		B	B	B	B	B	
Approach Delay (s)		19.5			18.9			15.3			14.8	
Approach LOS		B			B			B			B	

Intersection Summary			
HCM Average Control Delay	15.4	HCM Level of Service	B
HCM Volume to Capacity ratio	0.25		
Actuated Cycle Length (s)	105.0	Sum of lost time (s)	8.0
Intersection Capacity Utilization	38.2%	ICU Level of Service	A
Analysis Period (min)	15		

c Critical Lane Group

Movement	EBL	EBT	EBR	WBL	WBT	WBR	NBL	NBT	NBR	SBL	SBT	SBR
Lane Configurations												
Ideal Flow (vphpl)	1900	1900	1900	1900	1900	1900	1900	1900	1900	1900	1900	1900
Total Lost time (s)		4.0			4.0		4.0	4.0		4.0	4.0	
Lane Util. Factor		1.00			1.00		1.00	1.00		1.00	1.00	
Frt		0.90			0.99		1.00	0.99		1.00	1.00	
Flt Protected		0.99			0.96		0.95	1.00		0.95	1.00	
Satd. Flow (prot)		1657			1768		1770	1851		1770	1861	
Flt Permitted		0.96			0.75		0.23	1.00		0.22	1.00	
Satd. Flow (perm)		1599			1391		431	1851		409	1861	
Volume (vph)	20	10	100	50	5	5	55	770	35	15	780	5
Peak-hour factor, PHF	0.95	0.95	0.95	0.95	0.95	0.95	0.95	0.95	0.95	0.95	0.95	0.95
Adj. Flow (vph)	21	11	105	53	5	5	58	811	37	16	821	5
RTOR Reduction (vph)	0	80	0	0	4	0	0	2	0	0	0	0
Lane Group Flow (vph)	0	57	0	0	59	0	58	846	0	16	826	0
Turn Type	Perm			Perm			Perm			Perm		
Protected Phases		4			8			2			6	
Permitted Phases	4			8			2			6		
Actuated Green, G (s)		21.0			21.0		60.0	60.0		60.0	60.0	
Effective Green, g (s)		21.5			21.5		60.5	60.5		60.5	60.5	
Actuated g/C Ratio		0.24			0.24		0.67	0.67		0.67	0.67	
Clearance Time (s)		4.5			4.5		4.5	4.5		4.5	4.5	
Lane Grp Cap (vph)		382			332		290	1244		275	1251	
v/s Ratio Prot								c0.46			0.44	
v/s Ratio Perm		0.04			c0.04		0.13			0.04		
v/c Ratio		0.15			0.18		0.20	0.68		0.06	0.66	
Uniform Delay, d1		27.0			27.2		5.6	8.9		5.0	8.7	
Progression Factor		1.00			1.00		1.00	1.00		1.00	1.00	
Incremental Delay, d2		0.8			1.2		1.5	3.0		0.4	2.7	
Delay (s)		27.9			28.4		7.1	11.9		5.4	11.4	
Level of Service		C			C		A	B		A	B	
Approach Delay (s)		27.9			28.4			11.6			11.3	
Approach LOS		C			C			B			B	

Intersection Summary			
HCM Average Control Delay	13.2	HCM Level of Service	B
HCM Volume to Capacity ratio	0.55		
Actuated Cycle Length (s)	90.0	Sum of lost time (s)	8.0
Intersection Capacity Utilization	62.4%	ICU Level of Service	B
Analysis Period (min)	15		

c Critical Lane Group

Movement	EBL	EBT	EBR	WBL	WBT	WBR	NBL	NBT	NBR	SBL	SBT	SBR
Lane Configurations												
Ideal Flow (vphpl)	1900	1900	1900	1900	1900	1900	1900	1900	1900	1900	1900	1900
Total Lost time (s)	4.0	4.0	4.0		4.0		4.0	4.0		4.0	4.0	
Lane Util. Factor	1.00	1.00	1.00		1.00		1.00	1.00		1.00	1.00	
Frt	1.00	1.00	0.85		0.96		1.00	0.98		1.00	0.91	
Flt Protected	0.95	1.00	1.00		0.99		0.95	1.00		0.95	1.00	
Satd. Flow (prot)	1770	1863	1583		1781		1770	1830		1770	1690	
Flt Permitted	0.53	1.00	1.00		0.96		0.07	1.00		0.58	1.00	
Satd. Flow (perm)	989	1863	1583		1711		126	1830		1072	1690	
Volume (vph)	270	180	250	20	105	50	100	230	30	80	450	730
Peak-hour factor, PHF	0.95	0.95	0.95	0.95	0.95	0.95	0.95	0.95	0.95	0.95	0.95	0.95
Adj. Flow (vph)	284	189	263	21	111	53	105	242	32	84	474	768
RTOR Reduction (vph)	0	0	196	0	16	0	0	5	0	0	65	0
Lane Group Flow (vph)	284	189	67	0	169	0	105	269	0	84	1177	0
Turn Type	Perm		Perm	Perm			Perm			Perm		
Protected Phases		4			8			2			6	
Permitted Phases	4		4	8			2			6		
Actuated Green, G (s)	22.5	22.5	22.5		22.5		58.5	58.5		58.5	58.5	
Effective Green, g (s)	23.0	23.0	23.0		23.0		59.0	59.0		59.0	59.0	
Actuated g/C Ratio	0.26	0.26	0.26		0.26		0.66	0.66		0.66	0.66	
Clearance Time (s)	4.5	4.5	4.5		4.5		4.5	4.5		4.5	4.5	
Lane Grp Cap (vph)	253	476	405		437		83	1200		703	1108	
v/s Ratio Prot		0.10						0.15			0.70	
v/s Ratio Perm	c0.29		0.04		0.10		c0.83			0.08		
v/c Ratio	1.12	0.40	0.17		0.39		1.27	0.22		0.12	1.06	
Uniform Delay, d1	33.5	27.8	26.0		27.7		15.5	6.3		5.8	15.5	
Progression Factor	1.00	1.00	1.00		1.00		1.00	1.00		1.00	1.00	
Incremental Delay, d2	93.6	2.5	0.9		2.6		185.7	0.4		0.3	45.3	
Delay (s)	127.1	30.2	26.9		30.2		201.2	6.7		6.1	60.8	
Level of Service	F	C	C		C		F	A		A	E	
Approach Delay (s)		66.4			30.2			60.6			57.3	
Approach LOS		E			C			E			E	

Intersection Summary			
HCM Average Control Delay	58.4	HCM Level of Service	E
HCM Volume to Capacity ratio	1.23		
Actuated Cycle Length (s)	90.0	Sum of lost time (s)	8.0
Intersection Capacity Utilization	112.0%	ICU Level of Service	H
Analysis Period (min)	15		

c Critical Lane Group

Movement	EBL	EBT	EBR	WBL	WBT	WBR	NBL	NBT	NBR	SBL	SBT	SBR
Lane Configurations												
Ideal Flow (vphpl)	1900	1900	1900	1900	1900	1900	1900	1900	1900	1900	1900	1900
Total Lost time (s)	4.0	4.0	4.0	4.0	4.0		4.0	4.0	4.0	4.0	4.0	
Lane Util. Factor	1.00	0.95	1.00	1.00	0.95		0.95	0.95	1.00	1.00	1.00	
Frt	1.00	1.00	0.85	1.00	0.94		1.00	1.00	0.85	1.00	0.98	
Flt Protected	0.95	1.00	1.00	0.95	1.00		0.95	0.97	1.00	0.95	1.00	
Satd. Flow (prot)	1770	3539	1583	1770	3327		1681	1709	1583	1770	1826	
Flt Permitted	0.49	1.00	1.00	0.20	1.00		0.48	0.51	1.00	0.46	1.00	
Satd. Flow (perm)	916	3539	1583	369	3327		853	902	1583	859	1826	
Volume (vph)	60	1120	495	285	255	170	270	55	275	180	165	25
Peak-hour factor, PHF	0.95	0.95	0.95	0.95	0.95	0.95	0.95	0.95	0.95	0.95	0.95	0.95
Adj. Flow (vph)	63	1179	521	300	268	179	284	58	289	189	174	26
RTOR Reduction (vph)	0	0	124	0	56	0	0	0	88	0	6	0
Lane Group Flow (vph)	63	1179	397	300	391	0	142	200	201	189	194	0
Turn Type	Perm		Perm	Perm			Perm		Perm	Perm		
Protected Phases		4			8			2			6	
Permitted Phases	4		4	8			2		2	6		
Actuated Green, G (s)	61.5	61.5	61.5	61.5	61.5		19.5	19.5	19.5	19.5	19.5	
Effective Green, g (s)	62.0	62.0	62.0	62.0	62.0		20.0	20.0	20.0	20.0	20.0	
Actuated g/C Ratio	0.69	0.69	0.69	0.69	0.69		0.22	0.22	0.22	0.22	0.22	
Clearance Time (s)	4.5	4.5	4.5	4.5	4.5		4.5	4.5	4.5	4.5	4.5	
Vehicle Extension (s)	3.0	3.0	3.0	3.0	3.0		3.0	3.0	3.0	3.0	3.0	
Lane Grp Cap (vph)	631	2438	1091	254	2292		190	200	352	191	406	
v/s Ratio Prot		0.33			0.12						0.11	
v/s Ratio Perm	0.07		0.25	c0.81			0.17	c0.22	0.13	0.22		
v/c Ratio	0.10	0.48	0.36	1.18	0.17		0.75	1.00	0.57	0.99	0.48	
Uniform Delay, d1	4.7	6.5	5.8	14.0	4.9		32.6	35.0	31.2	34.9	30.5	
Progression Factor	1.00	1.00	1.00	1.00	1.00		1.00	1.00	1.00	1.00	1.00	
Incremental Delay, d2	0.1	0.2	0.2	114.4	0.0		14.8	63.6	2.2	61.4	0.9	
Delay (s)	4.7	6.7	6.0	128.4	5.0		47.4	98.6	33.4	96.3	31.3	
Level of Service	A	A	A	F	A		D	F	C	F	C	
Approach Delay (s)		6.4			54.5			57.2			62.9	
Approach LOS		A			D			E			E	

Intersection Summary			
HCM Average Control Delay	31.9	HCM Level of Service	C
HCM Volume to Capacity ratio	1.14		
Actuated Cycle Length (s)	90.0	Sum of lost time (s)	8.0
Intersection Capacity Utilization	79.2%	ICU Level of Service	D
Analysis Period (min)	15		

c Critical Lane Group

APPENDIX K

PEAK HOUR INTERSECTION
LONG TERM (2035) WITH CONNECTION CONDITIONS
-MITIGATIONS-

2035 AM Pk Hr — W/ Project Mitigated

7: Friars Rd EB Ramps & Qualcomm Wy

1/28/2015

Movement	EBL	EBT	EBR	WBL	WBT	WBR	NBL	NBT	NBR	SBL	SBT	SBR
Lane Configurations												
Ideal Flow (vphpl)	1900	1900	1900	1900	1900	1900	1900	1900	1900	1900	1900	1900
Lane Width	12	11	14	12	12	12	12	12	15	12	12	12
Total Lost time (s)	4.0	4.0	4.0					4.0	4.0	4.0	4.0	
Lane Util. Factor	0.95	0.95	1.00					0.95	1.00	1.00	0.95	
Frpb, ped/bikes	1.00	1.00	1.00					1.00	1.00	1.00	1.00	
Flpb, ped/bikes	1.00	1.00	1.00					1.00	1.00	1.00	1.00	
Frt	1.00	1.00	0.85					1.00	0.85	1.00	1.00	
Flt Protected	0.95	0.95	1.00					1.00	1.00	0.95	1.00	
Satd. Flow (prot)	1681	1625	1689					3539	1742	1770	3539	
Flt Permitted	0.95	0.95	1.00					1.00	1.00	0.95	1.00	
Satd. Flow (perm)	1681	1625	1689					3539	1742	1770	3539	
Volume (vph)	330	0	120	0	0	0	0	730	235	245	655	0
Peak-hour factor, PHF	0.95	0.95	0.95	0.95	0.95	0.95	0.95	0.95	0.95	0.95	0.95	0.95
Adj. Flow (vph)	347	0	126	0	0	0	0	768	247	258	689	0
RTOR Reduction (vph)	0	0	100	0	0	0	0	0	142	0	0	0
Lane Group Flow (vph)	174	173	26	0	0	0	0	768	105	258	689	0
Confl. Peds. (#/hr)												
Turn Type	Split		Perm						Perm	Prot		
Protected Phases	4	4						2		1	6	
Permitted Phases			4						2			
Actuated Green, G (s)	15.9	15.9	15.9					32.8	32.8	16.9	54.3	
Effective Green, g (s)	16.8	16.8	16.8					33.9	33.9	17.3	55.2	
Actuated g/C Ratio	0.21	0.21	0.21					0.42	0.42	0.22	0.69	
Clearance Time (s)	4.9	4.9	4.9					5.1	5.1	4.4	4.9	
Vehicle Extension (s)	3.0	3.0	3.0					3.0	3.0	3.0	3.0	
Lane Grp Cap (vph)	353	341	355					1500	738	383	2442	
v/s Ratio Prot	0.10	c0.11						c0.22		c0.15	0.19	
v/s Ratio Perm			0.02						0.06			
v/c Ratio	0.49	0.51	0.07					0.51	0.14	0.67	0.28	
Uniform Delay, d1	27.8	27.9	25.4					17.0	14.1	28.8	4.8	
Progression Factor	1.00	1.00	1.00					1.00	1.00	1.00	1.00	
Incremental Delay, d2	1.1	1.2	0.1					1.3	0.4	4.6	0.3	
Delay (s)	28.9	29.1	25.5					18.2	14.5	33.4	5.1	
Level of Service	C	C	C					B	B	C	A	
Approach Delay (s)		28.1			0.0			17.3			12.8	
Approach LOS		C			A			B			B	

Intersection Summary				
HCM Average Control Delay	17.6	HCM Level of Service	B	
HCM Volume to Capacity ratio	0.55			
Actuated Cycle Length (s)	80.0	Sum of lost time (s)	12.0	
Intersection Capacity Utilization	64.9%	ICU Level of Service	C	
Analysis Period (min)	15			
c Critical Lane Group				

2035 AM Pk Hr — W/ Project Mitigated

8: Friars Rd WB Ramps & Qualcomm Wy

1/28/2015

Movement	EBL	EBT	EBR	WBL	WBT	WBR	NBL	NBT	NBR	SBL	SBT	SBR
Lane Configurations												
Ideal Flow (vphpl)	1900	1900	1900	1900	1900	1900	1900	1900	1900	1900	1900	1900
Lane Width	12	12	12	12	16	12	12	11	12	12	16	16
Total Lost time (s)				4.0	4.0		4.0	4.0			4.0	4.0
Lane Util. Factor				0.95	0.95		0.97	0.95			0.91	1.00
Frpb, ped/bikes				1.00	1.00		1.00	1.00			1.00	1.00
Flpb, ped/bikes				1.00	1.00		1.00	1.00			1.00	1.00
Frt				1.00	0.87		1.00	1.00			1.00	0.85
Flt Protected				0.95	0.99		0.95	1.00			1.00	1.00
Satd. Flow (prot)				1681	1735		3433	3421			5763	1794
Flt Permitted				0.95	0.99		0.95	1.00			1.00	1.00
Satd. Flow (perm)				1681	1735		3433	3421			5763	1794
Volume (vph)	0	0	0	300	0	290	430	625	0	0	600	185
Peak-hour factor, PHF	0.95	0.95	0.95	0.95	0.95	0.95	0.95	0.95	0.95	0.95	0.95	0.95
Adj. Flow (vph)	0	0	0	316	0	305	453	658	0	0	632	195
RTOR Reduction (vph)	0	0	0	0	197	0	0	0	0	0	0	150
Lane Group Flow (vph)	0	0	0	266	158	0	453	658	0	0	632	46
Confl. Peds. (#/hr)												
Turn Type				Split			Prot					Prot
Protected Phases				8	8		5	2			6	6
Permitted Phases												
Actuated Green, G (s)				19.5	19.5		35.7	60.5			20.1	20.1
Effective Green, g (s)				20.4	20.4		36.6	61.6			21.0	21.0
Actuated g/C Ratio				0.23	0.23		0.41	0.68			0.23	0.23
Clearance Time (s)				4.9	4.9		4.9	5.1			4.9	4.9
Vehicle Extension (s)				3.0	3.0		3.0	3.0			3.0	3.0
Lane Grp Cap (vph)				381	393		1396	2341			1345	419
v/s Ratio Prot				c0.16	0.09		c0.13	0.19			c0.11	0.03
v/s Ratio Perm												
v/c Ratio				0.70	0.40		0.32	0.28			0.47	0.11
Uniform Delay, d1				32.0	29.6		18.3	5.5			29.7	27.1
Progression Factor				1.00	1.00		1.00	1.00			1.00	1.00
Incremental Delay, d2				5.5	0.7		0.6	0.3			0.3	0.1
Delay (s)				37.5	30.3		18.9	5.8			30.0	27.3
Level of Service				D	C		B	A			C	C
Approach Delay (s)		0.0			33.4			11.2			29.3	
Approach LOS		A			C			B			C	

Intersection Summary				
HCM Average Control Delay	22.4	HCM Level of Service	C	
HCM Volume to Capacity ratio	0.46			
Actuated Cycle Length (s)	90.0	Sum of lost time (s)	12.0	
Intersection Capacity Utilization	64.9%	ICU Level of Service	C	
Analysis Period (min)	15			
c Critical Lane Group				

2035 AM Pk Hr — W/ Project Mitigated

23: I-805 NB Ramps & Murray Ridge Rd

1/28/2015

Movement	EBL	EBT	EBR	WBL	WBT	WBR	NBL	NBT	NBR	SBL	SBT	SBR
Lane Configurations												
Ideal Flow (vphpl)	1900	1900	1900	1900	1900	1900	1900	1900	1900	1900	1900	1900
Lane Width	12	12	12	16	12	16	12	16	12	12	16	11
Total Lost time (s)					4.0	4.0	4.0	4.0			4.0	
Lane Util. Factor					1.00	1.00	0.97	1.00			0.95	
Frpb, ped/bikes					1.00	1.00	1.00	1.00			1.00	
Flpb, ped/bikes					1.00	1.00	1.00	1.00			1.00	
Frt					1.00	0.85	1.00	1.00			0.94	
Flt Protected					0.95	1.00	0.95	1.00			1.00	
Satd. Flow (prot)					1770	1794	3433	2111			3782	
Flt Permitted					0.95	1.00	0.95	1.00			1.00	
Satd. Flow (perm)					1770	1794	3433	2111			3782	
Volume (vph)	0	0	0	270	0	475	715	355	0	0	440	270
Peak-hour factor, PHF	0.95	0.95	0.95	0.95	0.95	0.95	0.95	0.95	0.95	0.95	0.95	0.95
Adj. Flow (vph)	0	0	0	284	0	500	753	374	0	0	463	284
RTOR Reduction (vph)	0	0	0	0	0	372	0	0	0	0	104	0
Lane Group Flow (vph)	0	0	0	0	284	128	753	374	0	0	643	0
Confl. Peds. (#/hr)												
Turn Type				Perm		Perm	Prot					
Protected Phases					6		3	8			4	
Permitted Phases				6		6						
Actuated Green, G (s)					16.5	16.5	20.0	41.5			17.0	
Effective Green, g (s)					17.0	17.0	20.5	42.0			17.5	
Actuated g/C Ratio					0.25	0.25	0.31	0.63			0.26	
Clearance Time (s)					4.5	4.5	4.5	4.5			4.5	
Vehicle Extension (s)					3.0	3.0	3.0	3.0			3.0	
Lane Grp Cap (vph)					449	455	1050	1323			988	
v/s Ratio Prot							c0.22	0.18			c0.17	
v/s Ratio Perm					0.16	0.07						
v/c Ratio					0.63	0.28	0.72	0.28			0.65	
Uniform Delay, d1					22.2	20.1	20.7	5.7			22.0	
Progression Factor					1.00	1.00	1.00	1.00			1.00	
Incremental Delay, d2					2.9	0.3	2.4	0.1			1.5	
Delay (s)					25.1	20.4	23.0	5.8			23.6	
Level of Service					C	C	C	A			C	
Approach Delay (s)		0.0			22.1			17.3			23.6	
Approach LOS		A			C			B			C	

Intersection Summary				
HCM Average Control Delay	20.5	HCM Level of Service	C	
HCM Volume to Capacity ratio	0.67			
Actuated Cycle Length (s)	67.0	Sum of lost time (s)	12.0	
Intersection Capacity Utilization	85.6%	ICU Level of Service	E	
Analysis Period (min)	15			
c Critical Lane Group				

2035 AM Pk Hr — W/ Project Mitigated

24: I-805 SB Ramps & Murray Ridge Rd

1/28/2015

Movement	EBL	EBT	EBR	WBL	WBT	WBR	NBL	NBT	NBR	SBL	SBT	SBR
Lane Configurations												
Ideal Flow (vphpl)	1900	1900	1900	1900	1900	1900	1900	1900	1900	1900	1900	1900
Lane Width	12	14	12	12	12	12	12	16	12	12	15	12
Total Lost time (s)	4.0	4.0						4.0	4.0	4.0	4.0	
Lane Util. Factor	0.97	1.00						0.95	1.00	0.97	1.00	
Frpb, ped/bikes	1.00	1.00						1.00	1.00	1.00	1.00	
Flpb, ped/bikes	1.00	1.00						1.00	1.00	1.00	1.00	
Frt	1.00	0.85						1.00	0.85	1.00	1.00	
Flt Protected	0.95	1.00						1.00	1.00	0.95	1.00	
Satd. Flow (prot)	3433	1689						4011	1583	3433	2049	
Flt Permitted	0.95	1.00						1.00	1.00	0.95	1.00	
Satd. Flow (perm)	3433	1689						4011	1583	3433	2049	
Volume (vph)	240	0	670	0	0	0	0	830	385	360	350	0
Peak-hour factor, PHF	0.95	0.95	0.95	0.95	0.95	0.95	0.95	0.95	0.95	0.95	0.95	0.95
Adj. Flow (vph)	253	0	705	0	0	0	0	874	405	379	368	0
RTOR Reduction (vph)	0	288	0	0	0	0	0	0	272	0	0	0
Lane Group Flow (vph)	253	417	0	0	0	0	0	874	133	379	368	0
Confl. Peds. (#/hr)												
Turn Type	Perm								Perm	Prot		
Protected Phases		4						2		1	6	
Permitted Phases	4								2			
Actuated Green, G (s)	20.5	20.5						20.9	20.9	11.8	36.9	
Effective Green, g (s)	21.5	21.5						22.2	22.2	12.0	38.2	
Actuated g/C Ratio	0.32	0.32						0.33	0.33	0.18	0.56	
Clearance Time (s)	5.0	5.0						5.3	5.3	4.2	5.3	
Vehicle Extension (s)	3.0	3.0						3.0	3.0	3.0	3.0	
Lane Grp Cap (vph)	1090	536						1315	519	609	1156	
v/s Ratio Prot		c0.25						c0.22		c0.11	0.18	
v/s Ratio Perm	0.07								0.08			
v/c Ratio	0.23	0.78						0.66	0.26	0.62	0.32	
Uniform Delay, d1	17.0	20.9						19.6	16.7	25.8	7.8	
Progression Factor	1.00	1.00						1.00	1.00	1.00	1.00	
Incremental Delay, d2	0.1	7.0						1.3	0.3	2.0	0.2	
Delay (s)	17.1	28.0						20.8	17.0	27.7	8.0	
Level of Service	B	C						C	B	C	A	
Approach Delay (s)		25.1			0.0			19.6			18.0	
Approach LOS		C			A			B			B	

Intersection Summary				
HCM Average Control Delay	21.0	HCM Level of Service	C	
HCM Volume to Capacity ratio	0.70			
Actuated Cycle Length (s)	67.7	Sum of lost time (s)	12.0	
Intersection Capacity Utilization	85.6%	ICU Level of Service	E	
Analysis Period (min)	15			
c Critical Lane Group				

Movement	EBL	EBT	EBR	WBL	WBT	WBR	NBL	NBT	NBR	SBL	SBT	SBR
Lane Configurations												
Ideal Flow (vphpl)	1900	1900	1900	1900	1900	1900	1900	1900	1900	1900	1900	1900
Lane Width	12	12	14	12	12	12	10	12	12	12	12	12
Total Lost time (s)	4.0	4.0	4.0	4.0	4.0	4.0	4.0	4.0	4.0	4.0	4.0	
Lane Util. Factor	0.97	1.00	1.00	0.97	0.95	1.00	0.97	0.91	1.00	0.97	0.91	
Frpb, ped/bikes	1.00	1.00	1.00	1.00	1.00	1.00	1.00	1.00	1.00	1.00	1.00	
Flpb, ped/bikes	1.00	1.00	1.00	1.00	1.00	1.00	1.00	1.00	1.00	1.00	1.00	
Frt	1.00	1.00	0.85	1.00	1.00	0.85	1.00	1.00	0.85	1.00	0.96	
Flt Protected	0.95	1.00	1.00	0.95	1.00	1.00	0.95	1.00	1.00	0.95	1.00	
Satd. Flow (prot)	3433	1863	1689	3433	3539	1583	3204	5085	1583	3433	4890	
Flt Permitted	0.95	1.00	1.00	0.72	1.00	1.00	0.95	1.00	1.00	0.41	1.00	
Satd. Flow (perm)	3433	1863	1689	2587	3539	1583	3204	5085	1583	1473	4890	
Volume (vph)	190	60	135	225	30	245	95	585	685	215	365	125
Peak-hour factor, PHF	0.95	0.95	0.95	0.95	0.95	0.95	0.95	0.95	0.95	0.95	0.95	0.95
Adj. Flow (vph)	200	63	142	237	32	258	100	616	721	226	384	132
RTOR Reduction (vph)	0	0	71	0	0	191	0	0	413	0	71	0
Lane Group Flow (vph)	200	63	71	237	32	67	100	616	308	226	445	0
Confl. Peds. (#/hr)												
Turn Type	Prot		pm+ov	Perm		Perm	Prot		Prot	Perm		
Protected Phases	5	2	3		6		3	8	8		4	
Permitted Phases			2	6		6				4		
Actuated Green, G (s)	8.0	25.7	29.0	13.4	13.4	13.4	3.3	24.6	24.6	16.9	16.9	
Effective Green, g (s)	8.4	26.8	30.5	14.4	14.4	14.4	3.7	25.9	25.9	18.2	18.2	
Actuated g/C Ratio	0.14	0.44	0.50	0.24	0.24	0.24	0.06	0.43	0.43	0.30	0.30	
Clearance Time (s)	4.4	5.1	4.4	5.0	5.0	5.0	4.4	5.3	5.3	5.3	5.3	
Vehicle Extension (s)	3.0	3.0	3.0	3.0	3.0	3.0	3.0	3.0	3.0	3.0	3.0	
Lane Grp Cap (vph)	475	823	960	614	840	376	195	2170	675	442	1466	
v/s Ratio Prot	c0.06	0.03	0.00		0.01		0.03	0.12	c0.19		0.09	
v/s Ratio Perm			0.04	c0.09		0.04				0.15		
v/c Ratio	0.42	0.08	0.07	0.39	0.04	0.18	0.51	0.28	0.46	0.51	0.30	
Uniform Delay, d1	23.9	9.8	7.8	19.4	17.8	18.4	27.6	11.4	12.4	17.6	16.4	
Progression Factor	1.00	1.00	1.00	1.00	1.00	1.00	1.00	1.00	1.00	1.00	1.00	
Incremental Delay, d2	0.6	0.0	0.0	0.4	0.0	0.2	2.3	0.1	0.5	1.0	0.1	
Delay (s)	24.5	9.8	7.8	19.8	17.8	18.7	29.9	11.4	12.9	18.6	16.5	
Level of Service	C	A	A	B	B	B	C	B	B	B	B	
Approach Delay (s)		16.4			19.1			13.4			17.1	
Approach LOS		B			B			B			B	

Intersection Summary			
HCM Average Control Delay	15.7	HCM Level of Service	B
HCM Volume to Capacity ratio	0.43		
Actuated Cycle Length (s)	60.7	Sum of lost time (s)	12.0
Intersection Capacity Utilization	61.9%	ICU Level of Service	B
Analysis Period (min)	15		
c Critical Lane Group			

Movement	EBL	EBT	EBR	WBL	WBT	WBR	NBL	NBT	NBR	SBL	SBT	SBR
Lane Configurations												
Ideal Flow (vphpl)	1900	1900	1900	1900	1900	1900	1900	1900	1900	1900	1900	1900
Total Lost time (s)	4.0	4.0			4.0		4.0	4.0		4.0	4.0	4.0
Lane Util. Factor	0.95	0.95			1.00		1.00	1.00		1.00	1.00	1.00
Frt	1.00	0.93			0.96		1.00	1.00		1.00	1.00	0.85
Flt Protected	0.95	0.97			0.98		0.95	1.00		0.95	1.00	1.00
Satd. Flow (prot)	1681	1605			1753		1770	1861		1770	1863	1583
Flt Permitted	0.95	0.97			0.98		0.95	1.00		0.95	1.00	1.00
Satd. Flow (perm)	1681	1605			1753		1770	1861		1770	1863	1583
Volume (vph)	555	5	165	15	10	10	90	590	5	5	565	380
Peak-hour factor, PHF	0.95	0.95	0.95	0.95	0.95	0.95	0.95	0.95	0.95	0.95	0.95	0.95
Adj. Flow (vph)	584	5	174	16	11	11	95	621	5	5	595	400
RTOR Reduction (vph)	0	28	0	0	10	0	0	0	0	0	0	230
Lane Group Flow (vph)	385	350	0	0	28	0	95	626	0	5	595	170
Turn Type	Split			Split			Prot			Prot		Perm
Protected Phases	4	4		8	8		5	2		1	6	
Permitted Phases												6
Actuated Green, G (s)	22.6	22.6			4.6		16.1	51.7		0.7	36.3	36.3
Effective Green, g (s)	23.1	23.1			5.1		16.6	52.2		1.2	36.8	36.8
Actuated g/C Ratio	0.24	0.24			0.05		0.17	0.53		0.01	0.38	0.38
Clearance Time (s)	4.5	4.5			4.5		4.5	4.5		4.5	4.5	4.5
Vehicle Extension (s)	3.0	3.0			3.0		3.0	3.0		3.0	3.0	3.0
Lane Grp Cap (vph)	398	380			92		301	995		22	702	597
v/s Ratio Prot	c0.23	0.22			c0.02		c0.05	c0.34		0.00	c0.32	
v/s Ratio Perm												0.11
v/c Ratio	0.97	0.92			0.30		0.32	0.63		0.23	0.85	0.28
Uniform Delay, d1	36.9	36.4			44.5		35.5	15.9		47.7	27.8	21.2
Progression Factor	1.00	1.00			1.00		1.00	1.00		1.00	1.00	1.00
Incremental Delay, d2	36.2	27.2			1.8		2.7	3.0		5.2	9.3	0.3
Delay (s)	73.1	63.5			46.4		38.3	18.9		53.0	37.2	21.5
Level of Service	E	E			D		D	B		D	D	C
Approach Delay (s)		68.3			46.4			21.5			31.0	
Approach LOS		E			D			C			C	

Intersection Summary			
HCM Average Control Delay	39.8	HCM Level of Service	D
HCM Volume to Capacity ratio	0.83		
Actuated Cycle Length (s)	97.6	Sum of lost time (s)	20.0
Intersection Capacity Utilization	71.9%	ICU Level of Service	C
Analysis Period (min)	15		
c Critical Lane Group			

Movement	EBL	EBT	EBR	WBL	WBT	WBR	NBL	NBT	NBR	SBL	SBT	SBR
Lane Configurations												
Ideal Flow (vphpl)	1900	1900	1900	1900	1900	1900	1900	1900	1900	1900	1900	1900
Total Lost time (s)	4.0	4.0	4.0		4.0			4.0			4.0	
Lane Util. Factor	1.00	1.00	1.00		1.00			0.95			0.95	
Frt	1.00	1.00	0.85		0.94			0.99			0.94	
Flt Protected	0.95	1.00	1.00		1.00			0.99			0.99	
Satd. Flow (prot)	1770	1863	1583		1735			3479			3314	
Flt Permitted	0.95	1.00	1.00		1.00			0.84			0.84	
Satd. Flow (perm)	1770	1863	1583		1735			2950			2801	
Volume (vph)	325	105	75	20	110	120	75	380	30	45	150	120
Peak-hour factor, PHF	0.95	0.95	0.95	0.95	0.95	0.95	0.95	0.95	0.95	0.95	0.95	0.95
Adj. Flow (vph)	342	111	79	21	116	126	79	400	32	47	158	126
RTOR Reduction (vph)	0	0	58	0	39	0	0	5	0	0	79	0
Lane Group Flow (vph)	342	111	21	0	224	0	0	506	0	0	252	0
Turn Type	Split		Perm	Split			Perm			Perm		
Protected Phases	4	4		8	8			2			6	
Permitted Phases			4				2			6		
Actuated Green, G (s)	18.8	18.8	18.8		14.0			26.5			26.5	
Effective Green, g (s)	19.3	19.3	19.3		14.5			27.0			27.0	
Actuated g/C Ratio	0.27	0.27	0.27		0.20			0.37			0.37	
Clearance Time (s)	4.5	4.5	4.5		4.5			4.5			4.5	
Vehicle Extension (s)	3.0	3.0	3.0		3.0			3.0			3.0	
Lane Grp Cap (vph)	469	494	420		346			1094			1039	
v/s Ratio Prot	c0.19	0.06			c0.13							
v/s Ratio Perm			0.01					c0.17			0.09	
v/c Ratio	0.73	0.22	0.05		0.65			0.46			0.24	
Uniform Delay, d1	24.4	20.9	19.9		26.8			17.4			15.8	
Progression Factor	1.00	1.00	1.00		1.00			1.00			1.00	
Incremental Delay, d2	5.6	0.2	0.0		4.1			1.4			0.6	
Delay (s)	30.0	21.1	20.0		30.9			18.8			16.4	
Level of Service	C	C	B		C			B			B	
Approach Delay (s)		26.6			30.9			18.8			16.4	
Approach LOS		C			C			B			B	

Intersection Summary			
HCM Average Control Delay	22.8	HCM Level of Service	C
HCM Volume to Capacity ratio	0.59		
Actuated Cycle Length (s)	72.8	Sum of lost time (s)	12.0
Intersection Capacity Utilization	68.5%	ICU Level of Service	C
Analysis Period (min)	15		
c Critical Lane Group			

Movement	EBL	EBT	EBR	WBL	WBT	WBR	NBL	NBT	NBR	SBL	SBT	SBR
Lane Configurations												
Ideal Flow (vphpl)	1900	1900	1900	1900	1900	1900	1900	1900	1900	1900	1900	1900
Total Lost time (s)	4.0	4.0	4.0	4.0	4.0		4.0	4.0	4.0	4.0	4.0	
Lane Util. Factor	1.00	0.95	1.00	1.00	0.95		0.95	0.95	1.00	0.97	1.00	
Frt	1.00	1.00	0.85	1.00	0.99		1.00	1.00	0.85	1.00	0.89	
Flt Protected	0.95	1.00	1.00	0.95	1.00		0.95	0.96	1.00	0.95	1.00	
Satd. Flow (prot)	1770	3539	1583	1770	3501		1681	1700	1583	3433	1650	
Flt Permitted	0.95	1.00	1.00	0.95	1.00		0.95	0.60	1.00	0.95	1.00	
Satd. Flow (perm)	1770	3539	1583	1770	3501		1681	1058	1583	3433	1650	
Volume (vph)	46	600	175	90	770	60	590	60	175	20	5	15
Peak-hour factor, PHF	0.95	0.95	0.95	0.95	0.95	0.95	0.95	0.95	0.95	0.95	0.95	0.95
Adj. Flow (vph)	48	632	184	95	811	63	621	63	184	21	5	16
RTOR Reduction (vph)	0	0	77	0	4	0	0	0	78	0	13	0
Lane Group Flow (vph)	48	632	107	95	870	0	333	351	106	21	8	0
Turn Type	Prot		pt+ov	Prot			Prot		pt+ov	Prot		
Protected Phases	7	4	4 5	3	8		5	2	2 3	1	6	
Permitted Phases												
Actuated Green, G (s)	5.0	24.6	52.1	9.4	29.0		23.0	42.7	50.7	1.4	15.2	
Effective Green, g (s)	5.5	25.1	52.6	9.9	29.5		23.5	43.2	51.2	1.9	15.7	
Actuated g/C Ratio	0.06	0.28	0.58	0.11	0.33		0.26	0.48	0.57	0.02	0.17	
Clearance Time (s)	4.5	4.5		4.5	4.5		4.5	4.5		4.5	4.5	
Vehicle Extension (s)	3.0	3.0		3.0	3.0		3.0	3.0		3.0	3.0	
Lane Grp Cap (vph)	108	985	923	194	1145		438	674	899	72	287	
v/s Ratio Prot	0.03	0.18	0.07	c0.05	c0.25		c0.20	0.14	0.07	0.01	0.00	
v/s Ratio Perm								c0.11				
v/c Ratio	0.44	0.64	0.12	0.49	0.76		0.76	0.52	0.12	0.29	0.03	
Uniform Delay, d1	40.9	28.6	8.4	37.8	27.2		30.8	16.3	9.0	43.5	30.9	
Progression Factor	1.00	1.00	1.00	1.00	1.00		1.00	1.00	1.00	1.00	1.00	
Incremental Delay, d2	2.9	1.4	0.1	1.9	3.0		7.6	0.7	0.1	2.2	0.0	
Delay (s)	43.8	30.0	8.5	39.7	30.1		38.4	17.0	9.1	45.7	31.0	
Level of Service	D	C	A	D	C		D	B	A	D	C	
Approach Delay (s)		26.2			31.1			23.5			38.3	
Approach LOS		C			C			C			D	

Intersection Summary			
HCM Average Control Delay	27.3	HCM Level of Service	C
HCM Volume to Capacity ratio	0.68		
Actuated Cycle Length (s)	90.2	Sum of lost time (s)	12.0
Intersection Capacity Utilization	61.1%	ICU Level of Service	B
Analysis Period (min)	15		
c Critical Lane Group			

2035 PM Pk Hr — W/ Project Mitigated

7: Friars Rd EB Ramps & Qualcomm Wy

1/28/2015

Movement	EBL	EBT	EBR	WBL	WBT	WBR	NBL	NBT	NBR	SBL	SBT	SBR
Lane Configurations												
Ideal Flow (vphpl)	1900	1900	1900	1900	1900	1900	1900	1900	1900	1900	1900	1900
Lane Width	12	11	14	12	12	12	12	12	15	12	12	12
Total Lost time (s)	4.0	4.0	4.0					4.0	4.0	4.0	4.0	
Lane Util. Factor	0.95	0.95	1.00					0.95	1.00	1.00	0.95	
Frpb, ped/bikes	1.00	1.00	1.00					1.00	1.00	1.00	1.00	
Flpb, ped/bikes	1.00	1.00	1.00					1.00	1.00	1.00	1.00	
Frt	1.00	1.00	0.85					1.00	0.85	1.00	1.00	
Flt Protected	0.95	0.95	1.00					1.00	1.00	0.95	1.00	
Satd. Flow (prot)	1681	1625	1689					3539	1742	1770	3539	
Flt Permitted	0.95	0.95	1.00					1.00	1.00	0.95	1.00	
Satd. Flow (perm)	1681	1625	1689					3539	1742	1770	3539	
Volume (vph)	450	0	205	0	0	0	0	1380	635	480	890	0
Peak-hour factor, PHF	0.95	0.95	0.95	0.95	0.95	0.95	0.95	0.95	0.95	0.95	0.95	0.95
Adj. Flow (vph)	474	0	216	0	0	0	0	1453	668	505	937	0
RTOR Reduction (vph)	0	0	148	0	0	0	0	0	247	0	0	0
Lane Group Flow (vph)	237	237	68	0	0	0	0	1453	421	505	937	0
Confl. Peds. (#/hr)												
Turn Type	Split		Perm						Perm	Prot		
Protected Phases	4	4						2		1	6	
Permitted Phases			4						2			
Actuated Green, G (s)	25.5	25.5	25.5					53.9	53.9	46.2	104.7	
Effective Green, g (s)	26.4	26.4	26.4					55.0	55.0	46.6	105.6	
Actuated g/C Ratio	0.19	0.19	0.19					0.39	0.39	0.33	0.75	
Clearance Time (s)	4.9	4.9	4.9					5.1	5.1	4.4	4.9	
Vehicle Extension (s)	3.0	3.0	3.0					3.0	3.0	3.0	3.0	
Lane Grp Cap (vph)	317	306	318					1390	684	589	2669	
v/s Ratio Prot	0.14	c0.15						c0.41		c0.29	0.26	
v/s Ratio Perm			0.04						0.24			
v/c Ratio	0.75	0.77	0.21					1.05	0.62	0.86	0.35	
Uniform Delay, d1	53.7	54.0	48.0					42.5	34.0	43.6	5.7	
Progression Factor	1.00	1.00	1.00					1.00	1.00	0.48	3.19	
Incremental Delay, d2	9.3	11.6	0.3					36.9	4.1	7.8	0.2	
Delay (s)	62.9	65.5	48.4					79.4	38.1	28.9	18.6	
Level of Service	E	E	D					E	D	C	B	
Approach Delay (s)		59.3			0.0			66.4			22.2	
Approach LOS		E			A			E			C	

Intersection Summary				
HCM Average Control Delay	50.3	HCM Level of Service	D	
HCM Volume to Capacity ratio	0.92			
Actuated Cycle Length (s)	140.0	Sum of lost time (s)	12.0	
Intersection Capacity Utilization	99.7%	ICU Level of Service	F	
Analysis Period (min)	15			
c Critical Lane Group				

2035 PM Pk Hr — W/ Project Mitigated

8: Friars Rd WB Ramps & Qualcomm Wy

1/28/2015

Movement	EBL	EBT	EBR	WBL	WBT	WBR	NBL	NBT	NBR	SBL	SBT	SBR
Lane Configurations												
Ideal Flow (vphpl)	1900	1900	1900	1900	1900	1900	1900	1900	1900	1900	1900	1900
Lane Width	12	12	12	12	16	12	12	11	12	12	16	16
Total Lost time (s)				4.0	4.0		4.0	4.0			4.0	4.0
Lane Util. Factor				0.95	0.95		0.97	0.95			0.91	1.00
Frpb, ped/bikes				1.00	1.00		1.00	1.00			1.00	1.00
Flpb, ped/bikes				1.00	1.00		1.00	1.00			1.00	1.00
Frt				1.00	0.86		1.00	1.00			1.00	0.85
Flt Protected				0.95	1.00		0.95	1.00			1.00	1.00
Satd. Flow (prot)				1681	1721		3433	3421			5763	1794
Flt Permitted				0.95	1.00		0.95	1.00			1.00	1.00
Satd. Flow (perm)				1681	1721		3433	3421			5763	1794
Volume (vph)	0	0	0	415	0	360	785	1045	0	0	950	270
Peak-hour factor, PHF	0.95	0.95	0.95	0.95	0.95	0.95	0.95	0.95	0.95	0.95	0.95	0.95
Adj. Flow (vph)	0	0	0	437	0	379	826	1100	0	0	1000	284
RTOR Reduction (vph)	0	0	0	0	121	0	0	0	0	0	0	100
Lane Group Flow (vph)	0	0	0	405	290	0	826	1100	0	0	1000	184
Confl. Peds. (#/hr)												
Turn Type				Split			Prot					Prot
Protected Phases				8	8		5	2			6	6
Permitted Phases												
Actuated Green, G (s)				28.0	28.0		57.2	102.0			40.1	40.1
Effective Green, g (s)				28.9	28.9		58.1	103.1			41.0	41.0
Actuated g/C Ratio				0.21	0.21		0.42	0.74			0.29	0.29
Clearance Time (s)				4.9	4.9		4.9	5.1			4.9	4.9
Vehicle Extension (s)				3.0	3.0		3.0	3.0			3.0	3.0
Lane Grp Cap (vph)				347	355		1425	2519			1688	525
v/s Ratio Prot				c0.24	0.17		c0.24	0.32			c0.17	0.10
v/s Ratio Perm												
v/c Ratio				1.17	0.82		0.58	0.44			0.59	0.35
Uniform Delay, d1				55.5	53.0		31.5	7.2			42.4	39.0
Progression Factor				1.00	1.00		0.66	0.00			1.00	1.00
Incremental Delay, d2				101.9	13.4		0.5	0.2			0.6	0.4
Delay (s)				157.5	66.5		21.2	0.2			42.9	39.4
Level of Service				F	E		C	A			D	D
Approach Delay (s)		0.0			111.6			9.2			42.1	
Approach LOS		A			F			A			D	

Intersection Summary				
HCM Average Control Delay	40.5	HCM Level of Service	D	
HCM Volume to Capacity ratio	0.72			
Actuated Cycle Length (s)	140.0	Sum of lost time (s)	12.0	
Intersection Capacity Utilization	99.7%	ICU Level of Service	F	
Analysis Period (min)	15			
c Critical Lane Group				

2035 PM Pk Hr — W/ Project Mitigated

23: I-805 NB Ramps & Murray Ridge Rd

1/28/2015

Movement	EBL	EBT	EBR	WBL	WBT	WBR	NBL	NBT	NBR	SBL	SBT	SBR
Lane Configurations												
Ideal Flow (vphpl)	1900	1900	1900	1900	1900	1900	1900	1900	1900	1900	1900	1900
Lane Width	12	12	12	16	12	16	12	16	12	12	16	11
Total Lost time (s)					4.0	4.0	4.0	4.0			4.0	
Lane Util. Factor					1.00	1.00	0.97	1.00			0.95	
Frpb, ped/bikes					1.00	1.00	1.00	1.00			1.00	
Flpb, ped/bikes					1.00	1.00	1.00	1.00			1.00	
Frt					1.00	0.85	1.00	1.00			0.94	
Flt Protected					0.95	1.00	0.95	1.00			1.00	
Satd. Flow (prot)					1770	1794	3433	2111			3780	
Flt Permitted					0.95	1.00	0.95	1.00			1.00	
Satd. Flow (perm)					1770	1794	3433	2111			3780	
Volume (vph)	0	0	0	485	0	675	1035	350	0	0	675	420
Peak-hour factor, PHF	0.95	0.95	0.95	0.95	0.95	0.95	0.95	0.95	0.95	0.95	0.95	0.95
Adj. Flow (vph)	0	0	0	511	0	711	1089	368	0	0	711	442
RTOR Reduction (vph)	0	0	0	0	0	362	0	0	0	0	96	0
Lane Group Flow (vph)	0	0	0	0	511	349	1089	368	0	0	1057	0
Confl. Peds. (#/hr)												
Turn Type				Perm		Perm	Prot					
Protected Phases					6		3	8			4	
Permitted Phases				6		6						
Actuated Green, G (s)					28.9	28.9	30.6	62.1			27.0	
Effective Green, g (s)					29.4	29.4	31.1	62.6			27.5	
Actuated g/C Ratio					0.29	0.29	0.31	0.63			0.28	
Clearance Time (s)					4.5	4.5	4.5	4.5			4.5	
Vehicle Extension (s)					3.0	3.0	3.0	3.0			3.0	
Lane Grp Cap (vph)					520	527	1068	1321			1040	
v/s Ratio Prot							c0.32	0.17			c0.28	
v/s Ratio Perm					0.29	0.19						
v/c Ratio					0.98	0.66	1.02	0.28			1.02	
Uniform Delay, d1					35.0	30.9	34.5	8.5			36.2	
Progression Factor					1.00	1.00	1.00	1.00			1.00	
Incremental Delay, d2					34.8	3.1	32.6	0.1			31.9	
Delay (s)					69.8	34.1	67.0	8.6			68.2	
Level of Service					E	C	E	A			E	
Approach Delay (s)		0.0			49.0			52.3			68.2	
Approach LOS		A			D			D			E	

Intersection Summary				
HCM Average Control Delay	56.0	HCM Level of Service	E	
HCM Volume to Capacity ratio	1.01			
Actuated Cycle Length (s)	100.0	Sum of lost time (s)	12.0	
Intersection Capacity Utilization	135.8%	ICU Level of Service	H	
Analysis Period (min)	15			
c Critical Lane Group				

2035 PM Pk Hr — W/ Project Mitigated

24: I-805 SB Ramps & Murray Ridge Rd

1/28/2015

Movement	EBL	EBT	EBR	WBL	WBT	WBR	NBL	NBT	NBR	SBL	SBT	SBR
Lane Configurations												
Ideal Flow (vphpl)	1900	1900	1900	1900	1900	1900	1900	1900	1900	1900	1900	1900
Lane Width	12	14	12	12	12	12	12	16	12	12	15	12
Total Lost time (s)	4.0	4.0						4.0	4.0	4.0	4.0	
Lane Util. Factor	0.97	1.00						0.95	1.00	0.97	1.00	
Frpb, ped/bikes	1.00	1.00						1.00	1.00	1.00	1.00	
Flpb, ped/bikes	1.00	1.00						1.00	1.00	1.00	1.00	
Frt	1.00	0.85						1.00	0.85	1.00	1.00	
Flt Protected	0.95	1.00						1.00	1.00	0.95	1.00	
Satd. Flow (prot)	3433	1689						4011	1583	3433	2049	
Flt Permitted	0.95	1.00						1.00	1.00	0.95	1.00	
Satd. Flow (perm)	3433	1689						4011	1583	3433	2049	
Volume (vph)	310	0	1160	0	0	0	0	1070	620	545	610	0
Peak-hour factor, PHF	0.95	0.95	0.95	0.95	0.95	0.95	0.95	0.95	0.95	0.95	0.95	0.95
Adj. Flow (vph)	326	0	1221	0	0	0	0	1126	653	574	642	0
RTOR Reduction (vph)	0	70	0	0	0	0	0	0	364	0	0	0
Lane Group Flow (vph)	326	1151	0	0	0	0	0	1126	289	574	642	0
Confl. Peds. (#/hr)												
Turn Type	Perm								Perm	Prot		
Protected Phases		4						2		1	6	
Permitted Phases	4								2			
Actuated Green, G (s)	61.0	61.0						28.7	28.7	15.8	48.7	
Effective Green, g (s)	62.0	62.0						30.0	30.0	16.0	50.0	
Actuated g/C Ratio	0.52	0.52						0.25	0.25	0.13	0.42	
Clearance Time (s)	5.0	5.0						5.3	5.3	4.2	5.3	
Vehicle Extension (s)	3.0	3.0						3.0	3.0	3.0	3.0	
Lane Grp Cap (vph)	1774	873						1003	396	458	854	
v/s Ratio Prot		c0.68						c0.28		c0.17	0.31	
v/s Ratio Perm	0.09								0.18			
v/c Ratio	0.18	1.32						1.12	0.73	1.25	0.75	
Uniform Delay, d1	15.5	29.0						45.0	41.3	52.0	29.7	
Progression Factor	1.00	1.00						1.00	1.00	1.00	1.00	
Incremental Delay, d2	0.1	151.6						68.4	6.8	130.9	3.8	
Delay (s)	15.5	180.6						113.4	48.1	182.9	33.5	
Level of Service	B	F						F	D	F	C	
Approach Delay (s)		145.8			0.0			89.4			104.0	
Approach LOS		F			A			F			F	

Intersection Summary				
HCM Average Control Delay	112.5	HCM Level of Service	F	
HCM Volume to Capacity ratio	1.26			
Actuated Cycle Length (s)	120.0	Sum of lost time (s)	12.0	
Intersection Capacity Utilization	135.8%	ICU Level of Service	H	
Analysis Period (min)	15			
c Critical Lane Group				

Movement	EBL	EBT	EBR	WBL	WBT	WBR	NBL	NBT	NBR	SBL	SBT	SBR
Lane Configurations												
Ideal Flow (vphpl)	1900	1900	1900	1900	1900	1900	1900	1900	1900	1900	1900	1900
Lane Width	12	12	14	12	12	12	10	12	12	12	12	12
Total Lost time (s)	4.0	4.0	4.0	4.0	4.0	4.0	4.0	4.0	4.0	4.0	4.0	
Lane Util. Factor	0.97	1.00	1.00	0.97	0.95	1.00	0.97	0.91	1.00	0.97	0.91	
Frpb, ped/bikes	1.00	1.00	1.00	1.00	1.00	1.00	1.00	1.00	1.00	1.00	1.00	
Flpb, ped/bikes	1.00	1.00	1.00	1.00	1.00	1.00	1.00	1.00	1.00	1.00	1.00	
Frt	1.00	1.00	0.85	1.00	1.00	0.85	1.00	1.00	0.85	1.00	0.96	
Flt Protected	0.95	1.00	1.00	0.95	1.00	1.00	0.95	1.00	1.00	0.95	1.00	
Satd. Flow (prot)	3433	1863	1689	3433	3539	1583	3204	5085	1583	3433	4864	
Flt Permitted	0.95	1.00	1.00	0.66	1.00	1.00	0.95	1.00	1.00	0.23	1.00	
Satd. Flow (perm)	3433	1863	1689	2384	3539	1583	3204	5085	1583	822	4864	
Volume (vph)	395	145	355	625	200	415	285	1120	430	290	540	220
Peak-hour factor, PHF	0.95	0.95	0.95	0.95	0.95	0.95	0.95	0.95	0.95	0.95	0.95	0.95
Adj. Flow (vph)	416	153	374	658	211	437	300	1179	453	305	568	232
RTOR Reduction (vph)	0	0	124	0	0	68	0	0	208	0	53	0
Lane Group Flow (vph)	416	153	250	658	211	370	300	1179	245	305	747	0
Confl. Peds. (#/hr)												
Turn Type	Prot		pm+ov	Perm		Perm	Prot		Prot	Perm		
Protected Phases	5	2	3		6		3	8	8		4	
Permitted Phases			2	6		6				4		
Actuated Green, G (s)	17.0	55.3	67.7	34.0	34.0	34.0	12.4	74.3	74.3	57.5	57.5	
Effective Green, g (s)	17.4	56.4	69.2	35.0	35.0	35.0	12.8	75.6	75.6	58.8	58.8	
Actuated g/C Ratio	0.12	0.40	0.49	0.25	0.25	0.25	0.09	0.54	0.54	0.42	0.42	
Clearance Time (s)	4.4	5.1	4.4	5.0	5.0	5.0	4.4	5.3	5.3	5.3	5.3	
Vehicle Extension (s)	3.0	3.0	3.0	3.0	3.0	3.0	3.0	3.0	3.0	3.0	3.0	
Lane Grp Cap (vph)	427	751	883	596	885	396	293	2746	855	345	2043	
v/s Ratio Prot	c0.12	0.08	0.03		0.06		c0.09	0.23	0.15		0.15	
v/s Ratio Perm			0.12	c0.28		0.23				c0.37		
v/c Ratio	0.97	0.20	0.28	1.10	0.24	0.93	1.02	0.43	0.29	0.88	0.37	
Uniform Delay, d1	61.1	27.2	20.8	52.5	41.9	51.4	63.6	19.3	17.5	37.5	27.8	
Progression Factor	1.00	1.00	1.00	1.00	1.00	1.00	1.00	1.00	1.00	1.00	1.00	
Incremental Delay, d2	36.5	0.1	0.2	68.7	0.1	28.8	58.8	0.1	0.2	22.5	0.1	
Delay (s)	97.6	27.3	21.0	121.2	42.0	80.1	122.4	19.4	17.7	59.9	27.9	
Level of Service	F	C	C	F	D	F	F	B	B	E	C	
Approach Delay (s)		55.8			94.6			35.0			36.8	
Approach LOS		E			F			C			D	

Intersection Summary			
HCM Average Control Delay	53.8	HCM Level of Service	D
HCM Volume to Capacity ratio	0.97		
Actuated Cycle Length (s)	140.0	Sum of lost time (s)	16.0
Intersection Capacity Utilization	68.7%	ICU Level of Service	C
Analysis Period (min)	15		
c Critical Lane Group			

Movement	EBL	EBT	EBR	WBL	WBT	WBR	NBL	NBT	NBR	SBL	SBT	SBR
Lane Configurations												
Ideal Flow (vphpl)	1900	1900	1900	1900	1900	1900	1900	1900	1900	1900	1900	1900
Total Lost time (s)	4.0	4.0			4.0		4.0	4.0		4.0	4.0	4.0
Lane Util. Factor	0.95	0.95			1.00		1.00	1.00		1.00	1.00	1.00
Frt	1.00	0.97			0.97		1.00	1.00		1.00	1.00	0.85
Flt Protected	0.95	0.96			0.99		0.95	1.00		0.95	1.00	1.00
Satd. Flow (prot)	1681	1654			1782		1770	1857		1770	1863	1583
Flt Permitted	0.95	0.96			0.99		0.95	1.00		0.95	1.00	1.00
Satd. Flow (perm)	1681	1654			1782		1770	1857		1770	1863	1583
Volume (vph)	610	10	65	5	10	5	65	895	20	10	915	795
Peak-hour factor, PHF	0.95	0.95	0.95	0.95	0.95	0.95	0.95	0.95	0.95	0.95	0.95	0.95
Adj. Flow (vph)	642	11	68	5	11	5	68	942	21	11	963	837
RTOR Reduction (vph)	0	6	0	0	5	0	0	0	0	0	0	215
Lane Group Flow (vph)	372	343	0	0	16	0	68	963	0	11	963	622
Turn Type	Split			Split			Prot			Prot		Perm
Protected Phases	4	4		8	8		5	2		1	6	
Permitted Phases												6
Actuated Green, G (s)	28.6	28.6			4.5		16.0	83.9		1.5	69.4	69.4
Effective Green, g (s)	29.1	29.1			5.0		16.5	84.4		2.0	69.9	69.9
Actuated g/C Ratio	0.21	0.21			0.04		0.12	0.62		0.01	0.51	0.51
Clearance Time (s)	4.5	4.5			4.5		4.5	4.5		4.5	4.5	4.5
Vehicle Extension (s)	3.0	3.0			3.0		3.0	3.0		3.0	3.0	3.0
Lane Grp Cap (vph)	358	353			65		214	1148		26	954	811
v/s Ratio Prot	c0.22	0.21			c0.01		c0.04	c0.52		0.01	c0.52	
v/s Ratio Perm												0.39
v/c Ratio	1.04	0.97			0.25		0.32	0.84		0.42	1.01	0.77
Uniform Delay, d1	53.7	53.3			63.9		54.9	20.6		66.7	33.3	26.8
Progression Factor	1.00	1.00			1.00		1.00	1.00		1.00	1.00	1.00
Incremental Delay, d2	58.1	40.0			2.0		3.9	7.4		10.7	31.5	4.4
Delay (s)	111.8	93.2			65.9		58.7	28.0		77.4	64.8	31.1
Level of Service	F	F			E		E	C		E	E	C
Approach Delay (s)		102.8			65.9			30.1			49.3	
Approach LOS		F			E			C			D	

Intersection Summary			
HCM Average Control Delay	54.6	HCM Level of Service	D
HCM Volume to Capacity ratio	0.97		
Actuated Cycle Length (s)	136.5	Sum of lost time (s)	20.0
Intersection Capacity Utilization	86.5%	ICU Level of Service	E
Analysis Period (min)	15		
c Critical Lane Group			

Movement	EBL	EBT	EBR	WBL	WBT	WBR	NBL	NBT	NBR	SBL	SBT	SBR
Lane Configurations												
Ideal Flow (vphpl)	1900	1900	1900	1900	1900	1900	1900	1900	1900	1900	1900	1900
Total Lost time (s)	4.0	4.0	4.0		4.0			4.0			4.0	
Lane Util. Factor	1.00	1.00	1.00		1.00			0.95			0.95	
Frt	1.00	1.00	0.85		0.96			0.99			0.91	
Flt Protected	0.95	1.00	1.00		0.99			0.99			1.00	
Satd. Flow (prot)	1770	1863	1583		1781			3447			3222	
Flt Permitted	0.95	1.00	1.00		0.99			0.53			0.89	
Satd. Flow (perm)	1770	1863	1583		1781			1864			2882	
Volume (vph)	270	180	250	20	105	50	100	230	30	80	450	730
Peak-hour factor, PHF	0.95	0.95	0.95	0.95	0.95	0.95	0.95	0.95	0.95	0.95	0.95	0.95
Adj. Flow (vph)	284	189	263	21	111	53	105	242	32	84	474	768
RTOR Reduction (vph)	0	0	209	0	17	0	0	7	0	0	259	0
Lane Group Flow (vph)	284	189	54	0	168	0	0	372	0	0	1067	0
Turn Type	Split		Perm	Split			Perm			Perm		
Protected Phases	4	4		8	8			2			6	
Permitted Phases			4				2			6		
Actuated Green, G (s)	16.9	16.9	16.9		12.4			41.3			41.3	
Effective Green, g (s)	17.4	17.4	17.4		12.9			41.8			41.8	
Actuated g/C Ratio	0.21	0.21	0.21		0.15			0.50			0.50	
Clearance Time (s)	4.5	4.5	4.5		4.5			4.5			4.5	
Vehicle Extension (s)	3.0	3.0	3.0		3.0			3.0			3.0	
Lane Grp Cap (vph)	366	385	328		273			926			1432	
v/s Ratio Prot	c0.16	0.10			c0.09							
v/s Ratio Perm			0.03					0.20			c0.37	
v/c Ratio	0.78	0.49	0.17		0.62			1.09dl			0.75	
Uniform Delay, d1	31.5	29.4	27.4		33.3			13.3			16.9	
Progression Factor	1.00	1.00	1.00		1.00			1.00			1.00	
Incremental Delay, d2	9.9	1.0	0.2		4.1			1.3			3.6	
Delay (s)	41.4	30.4	27.6		37.4			14.6			20.5	
Level of Service	D	C	C		D			B			C	
Approach Delay (s)		33.7			37.4			14.6			20.5	
Approach LOS		C			D			B			C	

Intersection Summary			
HCM Average Control Delay	24.5	HCM Level of Service	C
HCM Volume to Capacity ratio	0.73		
Actuated Cycle Length (s)	84.1	Sum of lost time (s)	12.0
Intersection Capacity Utilization	86.5%	ICU Level of Service	E
Analysis Period (min)	15		
dl Defacto Left Lane. Recode with 1 though lane as a left lane.			
c Critical Lane Group			

Movement	EBL	EBT	EBR	WBL	WBT	WBR	NBL	NBT	NBR	SBL	SBT	SBR
Lane Configurations												
Ideal Flow (vphpl)	1900	1900	1900	1900	1900	1900	1900	1900	1900	1900	1900	1900
Total Lost time (s)	4.0	4.0	4.0	4.0	4.0		4.0	4.0	4.0	4.0	4.0	
Lane Util. Factor	1.00	0.95	1.00	1.00	0.95		0.95	0.95	1.00	0.97	1.00	
Frt	1.00	1.00	0.85	1.00	0.94		1.00	1.00	0.85	1.00	0.98	
Flt Protected	0.95	1.00	1.00	0.95	1.00		0.95	0.97	1.00	0.95	1.00	
Satd. Flow (prot)	1770	3539	1583	1770	3327		1681	1712	1583	3433	1826	
Flt Permitted	0.95	1.00	1.00	0.95	1.00		0.95	0.55	1.00	0.95	1.00	
Satd. Flow (perm)	1770	3539	1583	1770	3327		1681	972	1583	3433	1826	
Volume (vph)	60	1120	495	285	255	170	270	55	275	180	165	25
Peak-hour factor, PHF	0.95	0.95	0.95	0.95	0.95	0.95	0.95	0.95	0.95	0.95	0.95	0.95
Adj. Flow (vph)	63	1179	521	300	268	179	284	58	289	189	174	26
RTOR Reduction (vph)	0	0	110	0	93	0	0	0	38	0	5	0
Lane Group Flow (vph)	63	1179	411	300	354	0	166	176	251	189	195	0
Turn Type	Prot		pt+ov	Prot			Prot		pt+ov	Prot		
Protected Phases	7	4	4 5	3	8		5	2	2 3	1	6	
Permitted Phases												
Actuated Green, G (s)	3.1	36.7	45.3	4.1	37.7		4.1	20.8	25.3	4.1	16.7	
Effective Green, g (s)	3.6	37.2	45.8	4.6	38.2		4.6	21.8	25.8	4.6	17.2	
Actuated g/C Ratio	0.05	0.47	0.58	0.06	0.48		0.06	0.27	0.32	0.06	0.22	
Clearance Time (s)	4.5	4.5		4.5	4.5		4.5	4.5		4.5	4.5	
Vehicle Extension (s)	3.0	3.0		3.0	3.0		3.0	3.0		3.0	3.0	
Lane Grp Cap (vph)	80	1654	911	102	1597		97	309	513	198	395	
v/s Ratio Prot	0.04	c0.33	0.26	c0.17	0.11		c0.10	0.03	0.16	0.06	0.11	
v/s Ratio Perm								c0.12				
v/c Ratio	0.79	0.71	0.45	2.94	0.22		1.71	0.57	0.49	0.95	0.49	
Uniform Delay, d1	37.6	16.9	9.7	37.5	12.0		37.5	24.9	21.6	37.4	27.4	
Progression Factor	1.00	1.00	1.00	1.00	1.00		1.00	1.00	1.00	1.00	1.00	
Incremental Delay, d2	38.7	1.5	0.4	899.5	0.1		359.8	2.4	0.7	50.6	1.0	
Delay (s)	76.3	18.4	10.0	937.0	12.1		397.3	27.3	22.3	88.0	28.3	
Level of Service	E	B	B	F	B		F	C	C	F	C	
Approach Delay (s)		18.0			383.6			122.4			57.3	
Approach LOS		B			F			F			E	

Intersection Summary			
HCM Average Control Delay	118.4	HCM Level of Service	F
HCM Volume to Capacity ratio	0.91		
Actuated Cycle Length (s)	79.6	Sum of lost time (s)	16.0
Intersection Capacity Utilization	79.2%	ICU Level of Service	D
Analysis Period (min)	15		
c Critical Lane Group			

APPENDIX L

MTS ROUTE MAPS AND SCHEDULES

CASH FARES / *Tarifas en efectivo*

Exact fare, please / *Favor de pagar la cantidad exacta*

Day Pass (Regional) / *Pase diario (Regional)* Compass Card required ($2) / *Se requiere un Compass Card ($2)*	**$5.00**
One-Way Fare / *Tarifa de una direccíon*	**$2.25**
Senior (60+)/Disabled/Medicare *Mayores de 60 años/Discapacitados/Medicare*	**$1.10***
Children 5 & under / *Niños de 5 años o menos* Up to two children ride free per paying adult / *Máximo dos niños viajan gratis por cada adulto*	**FREE** / ***GRATIS***

MONTHLY PASSES / *Pases mensual*

Adult / *Adulto*	**$72.00**
Senior (60+)/Disabled/Medicare *Mayores de 60 años/Discapacitados/Medicare*	**$18.00***
Youths (18 and under) *Jóvenes (18 años o menos)*	**$36.00***

*I.D. required for discount fare or pass.
**Se requiere identificación para tarifas o pases de descuento.*

DAY PASS (REGIONAL) / *Pase diario (Regional)*

All passes are sold on Compass Card, which can be reloaded and reused for up to five years. Compass Cards are available for $2 at select outlets. A $5 Day Pass requires a Compass Card. A paper Day Pass can be purchased on board buses for an additional $2 fee.

Todos los pases se venden en el Compass Card, el cual puede ser recargado y reutilizado por hasta cinco años. Compass Cards están disponibles por $2 en selectas sucursales. Un pase de un día por $5 requiere un Compass Card. Un pase de un día de papel se puede obtener a bordo los autobuses por un costo adicional de $2.

DIRECTORY / *Directorio*

Regional Transit Information *Información de transporte público regional*	**511** or/ó **(619) 233-3004**
TTY/TDD (teletype for hearing impaired) *Teletipo para sordos*	**(619) 234-5005** or/ó **(888) 722-4889**
InfoExpress (24-hour info via Touch-Tone phone) *Información las 24 horas (via teléfono de teclas)*	**(619) 685-4900**
Customer Service / Suggestions *Servicio al cliente / Sugerencias*	**(619) 557-4555**
SafeWatch	**(619) 557-4500**
The Transit Store / Lost & Found *The Transit Store / Objetos extraviados*	**(619) 234-1060**
Articles found on the bus are turned in at The Transit Store *Artículos encontrados en los autobuses son entregados a The Transit Store*	1st & Broadway Downtown San Diego M–F 9am–5pm
For MTS online trip planning *Planificación de viajes por Internet*	**www.sdmts.com**

For more information on riding MTS services, pick up a Rider's Guide on a bus or at The Transit Store, or visit **www.sdmts.com**.

*Para obtener más información sobre el uso de los servicios de MTS, recoja un 'Rider's Guide' en un autobús o en The Transit Store, o visita a **www.sdmts.com**.*

Thank you for riding MTS! ***¡Gracias por viajar con MTS!***

Effective JUNE 8, 2014

6

Fashion Valley – North Park

via Mission Valley

DESTINATIONS

- Fashion Valley Mall
- Mission Valley Center
- North Park Community Park
- Park in the Valley

TROLLEY CONNECTIONS
Fashion Valley
Mission Valley Center

MTS Metropolitan Transit System

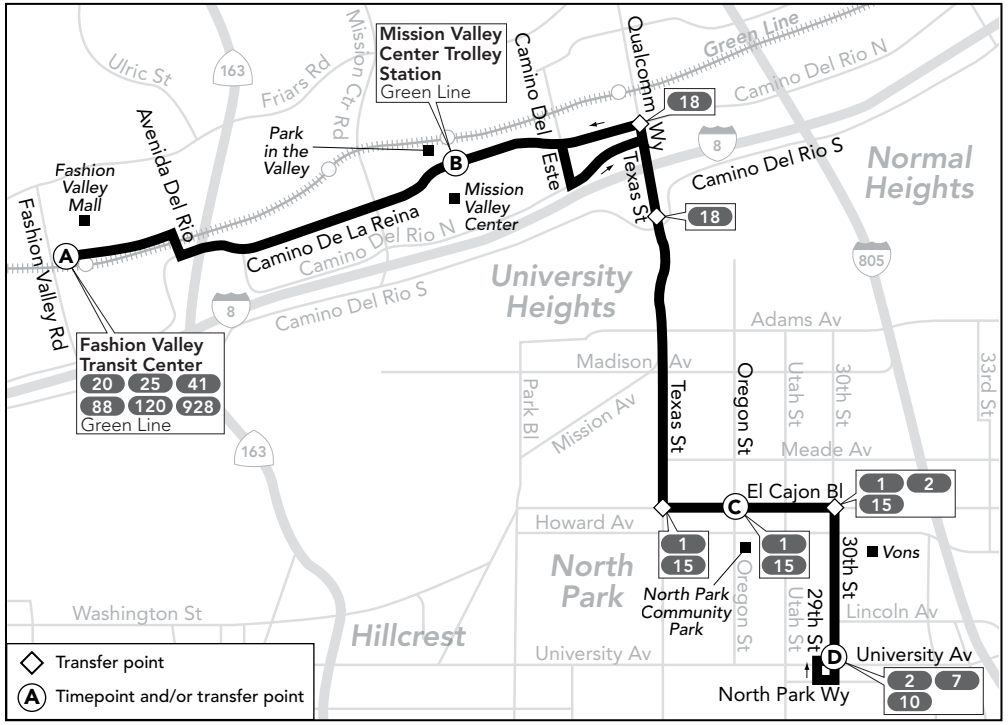

Route 6 – Sunday / *domingo*

Mission Valley ➡ North Park

(A) Fashion Valley Transit Center **DEPART**	(B) Mission Valley Center	(C) El Cajon Bl. & Oregon St.	(D) 30th St. & University **ARRIVE**
9:37a	9:43a	9:54a	9:59a
10:07	10:13	10:24	10:29
10:36	10:42	10:53	10:58
11:06	11:12	11:23	11:28
11:36	11:42	11:53	11:58
12:02p	**12:09p**	**12:21p**	**12:27p**
12:32	**12:39**	**12:51**	**12:57**
1:02	**1:09**	**1:21**	**1:27**
1:32	**1:39**	**1:51**	**1:57**
2:02	**2:09**	**2:21**	**2:27**
2:32	**2:39**	**2:51**	**2:57**
3:02	**3:09**	**3:21**	**3:27**
3:32	**3:39**	**3:51**	**3:57**
4:02	**4:09**	**4:21**	**4:27**
4:32	**4:39**	**4:51**	**4:57**
5:02	**5:09**	**5:21**	**5:27**
5:32	**5:39**	**5:51**	**5:57**
6:02	**6:08**	**6:19**	**6:25**
7:02	**7:08**	**7:18**	**7:23**
8:12	**8:18**	**8:28**	**8:33**

North Park ➡ Mission Valley

(D) 30th St. & University **DEPART**	(C) El Cajon Bl. & Oregon St.	(B) Park in the Valley	(A) Fashion Valley Transit Center **ARRIVE**
8:14a	8:19a	8:29a	8:35a
8:59	9:04	9:14	9:20
9:32	9:38	9:49	9:55
10:02	10:08	10:19	10:25
10:32	10:38	10:49	10:55
11:01	11:07	11:19	11:25
11:31	11:37	11:49	11:55
12:01p	**12:07p**	**12:19p**	**12:25p**
12:31	**12:37**	**12:49**	**12:55**
1:01	**1:07**	**1:19**	**1:25**
1:31	**1:37**	**1:49**	**1:55**
2:01	**2:07**	**2:19**	**2:25**
2:31	**2:37**	**2:49**	**2:55**
3:01	**3:07**	**3:19**	**3:25**
3:31	**3:37**	**3:49**	**3:55**
4:01	**4:07**	**4:19**	**4:25**
4:31	**4:37**	**4:49**	**4:55**
5:01	**5:07**	**5:19**	**5:25**
5:31	**5:37**	**5:49**	**5:55**
6:30	**6:35**	**6:46**	**6:52**
7:28	**7:33**	**7:43**	**7:49**

Alternative formats available upon request. Please call: (619) 557-4555 ***Formato alternativo disponible al preguntar. Favor de llamar: (619) 557-4555***

Route 6 – Monday through Friday / *lunes a viernes*

Mission Valley ➡ North Park

Ⓐ Fashion Valley Transit Center **DEPART**	Ⓑ Mission Valley Center	Ⓒ El Cajon Bl. & Oregon St.	Ⓓ 30th St. & University **ARRIVE**
6:01a	6:06a	6:14a	6:18a
6:24	6:29	6:37	6:41
6:39	6:45	6:54	6:59
6:54	7:00	7:09	7:14
7:09	7:15	7:24	7:29
7:24	7:30	7:39	7:44
7:39	7:45	7:54	7:59
7:54	8:00	8:09	8:14
8:09	8:15	8:24	8:29
8:24	8:30	8:39	8:44
8:38	8:44	8:53	8:58
8:53	8:59	9:08	9:13
9:08	9:14	9:23	9:28
9:23	9:29	9:38	9:43
9:36	9:43	9:54	9:59
9:51	9:58	10:09	10:14
10:06	10:13	10:24	10:29
10:21	10:28	10:39	10:44
10:35	10:42	10:53	10:58
10:50	10:57	11:08	11:13
11:05	11:12	11:23	11:28
11:20	11:27	11:38	11:43
11:35	11:42	11:53	11:58
11:50	11:57	12:08p	12:13p
12:05p	12:12p	12:23	12:28
12:20	12:27	12:38	12:43
12:35	12:42	12:53	12:58
12:50	12:57	1:08	1:13
1:05	1:12	1:23	1:28
1:20	1:27	1:38	1:43
1:32	1:39	1:51	1:57
1:47	1:54	2:06	2:12
2:02	2:09	2:21	2:27
2:17	2:24	2:36	2:42
2:32	2:39	2:51	2:57
2:47	2:54	3:06	3:12
3:02	3:09	3:21	3:27
3:17	3:24	3:36	3:42
3:32	3:39	3:51	3:57
3:47	3:54	4:06	4:12
4:02	4:09	4:21	4:27
4:17	4:24	4:36	4:42
4:32	4:39	4:51	4:57
4:47	4:54	5:06	5:12
5:02	5:09	5:21	5:27
5:17	5:24	5:36	5:42
5:32	5:39	5:51	5:57
5:47	5:54	6:06	6:12
6:02	6:08	6:19	6:25
6:32	6:38	6:49	6:55
7:02	7:08	7:18	7:23
7:32	7:38	7:48	7:53
8:02	8:08	8:18	8:23
8:32	8:37	8:46	8:51
9:02	9:07	9:16	9:21
9:32	9:37	9:46	9:51
10:02	10:07	10:16	10:21
10:32	10:37	10:45	10:49
11:06	11:11	11:19	11:23

North Park ➡ Mission Valley

Ⓓ 30th St. & University **DEPART**	Ⓒ El Cajon Bl. & Oregon St.	Ⓑ Park in the Valley	Ⓐ Fashion Valley Transit Center **ARRIVE**
5:22a	5:27a	5:36a	5:41a
5:51	5:56	6:05	6:10
6:05	6:10	6:19	6:24
6:21	6:26	6:35	6:40
6:32	6:37	6:48	6:54
6:47	6:52	7:03	7:09
7:02	7:07	7:18	7:24
7:17	7:22	7:33	7:39
7:32	7:37	7:48	7:54
7:47	7:52	8:03	8:09
8:02	8:07	8:18	8:24
8:17	8:22	8:33	8:39
8:32	8:37	8:48	8:54
8:47	8:52	9:03	9:09
9:01	9:07	9:18	9:24
9:16	9:22	9:33	9:39
9:31	9:37	9:48	9:54
9:47	9:53	10:04	10:10
10:02	10:08	10:19	10:25
10:17	10:23	10:34	10:40
10:32	10:38	10:49	10:55
10:47	10:53	11:04	11:10
11:01	11:07	11:19	11:25
11:16	11:22	11:34	11:40
11:31	11:37	11:49	11:55
11:46	11:52	12:04p	12:10p
12:01p	12:07p	12:19	12:25
12:16	12:22	12:34	12:40
12:31	12:37	12:49	12:55
12:46	12:52	1:04	1:10
1:01	1:07	1:19	1:25
1:16	1:22	1:34	1:40
1:31	1:37	1:49	1:55
1:46	1:52	2:04	2:10
2:01	2:07	2:19	2:25
2:16	2:22	2:34	2:40
2:31	2:37	2:49	2:55
2:46	2:52	3:04	3:10
3:01	3:07	3:19	3:25
3:16	3:22	3:34	3:40
3:31	3:37	3:49	3:55
3:46	3:52	4:04	4:10
4:01	4:07	4:19	4:25
4:16	4:22	4:34	4:40
4:31	4:37	4:49	4:55
4:46	4:52	5:04	5:10
5:01	5:07	5:19	5:25
5:16	5:22	5:34	5:40
5:31	5:37	5:49	5:55
6:01	6:07	6:18	6:24
6:28	6:34	6:45	6:51
7:00	7:05	7:15	7:21
7:28	7:33	7:43	7:49
7:58	8:03	8:13	8:19
8:28	8:33	8:43	8:49
8:54	8:59	9:09	9:15
9:26	9:31	9:40	9:45

Route 6 – Saturday / *sábado*

Mission Valley ➡ North Park

Ⓐ Fashion Valley Transit Center **DEPART**	Ⓑ Mission Valley Center	Ⓒ El Cajon Bl. & Oregon St.	Ⓓ 30th St. & University **ARRIVE**
6:39a	6:44a	6:52a	6:57a
7:10	7:15	7:23	7:28
7:39	7:45	7:54	7:59
8:09	8:15	8:24	8:29
8:39	8:45	8:54	8:59
9:09	9:15	9:24	9:29
9:37	9:43	9:54	9:59
10:07	10:13	10:24	10:29
10:22	10:28	10:39	10:44
10:36	10:42	10:53	10:58
10:51	10:57	11:08	11:13
11:06	11:12	11:23	11:28
11:21	11:27	11:38	11:43
11:36	11:42	11:53	11:58
11:51	11:57	12:08p	12:13p
12:02p	12:09p	12:21	12:27
12:17	12:24	12:36	12:42
12:32	12:39	12:51	12:57
12:47	12:54	1:06	1:12
1:02	1:09	1:21	1:27
1:17	1:24	1:36	1:42
1:32	1:39	1:51	1:57
1:47	1:54	2:06	2:12
2:02	2:09	2:21	2:27
2:17	2:24	2:36	2:42
2:32	2:39	2:51	2:57
2:47	2:54	3:06	3:12
3:02	3:09	3:21	3:27
3:17	3:24	3:36	3:42
3:32	3:39	3:51	3:57
3:47	3:54	4:06	4:12
4:02	4:09	4:21	4:27
4:17	4:24	4:36	4:42
4:32	4:39	4:51	4:57
4:47	4:54	5:06	5:12
5:02	5:09	5:21	5:27
5:17	5:24	5:36	5:42
5:32	5:39	5:51	5:57
5:47	5:54	6:06	6:12
6:02	6:08	6:19	6:25
6:32	6:38	6:49	6:55
7:02	7:08	7:18	7:23
7:32	7:38	7:48	7:53
8:02	8:08	8:18	8:23
8:32	8:37	8:46	8:51
9:02	9:07	9:16	9:21
9:32	9:37	9:46	9:51
10:06	10:11	10:20	10:25

North Park ➡ Mission Valley

Ⓓ 30th St. & University **DEPART**	Ⓒ El Cajon Bl. & Oregon St.	Ⓑ Park in the Valley	Ⓐ Fashion Valley Transit Center **ARRIVE**
6:30a	6:35a	6:44a	6:49a
7:00	7:05	7:14	7:19
7:31	7:36	7:46	7:52
8:04	8:09	8:19	8:25
8:34	8:39	8:49	8:55
9:04	9:09	9:19	9:25
9:32	9:38	9:49	9:55
10:02	10:08	10:19	10:25
10:17	10:23	10:34	10:40
10:32	10:38	10:49	10:55
10:47	10:53	11:04	11:10
11:01	11:07	11:19	11:25
11:16	11:22	11:34	11:40
11:31	11:37	11:49	11:55
11:46	11:52	12:04p	12:10p
12:01p	12:07p	12:19	12:25
12:16	12:22	12:34	12:40
12:31	12:37	12:49	12:55
12:46	12:52	1:04	1:10
1:01	1:07	1:19	1:25
1:16	1:22	1:34	1:40
1:31	1:37	1:49	1:55
1:46	1:52	2:04	2:10
2:01	2:07	2:19	2:25
2:16	2:22	2:34	2:40
2:31	2:37	2:49	2:55
2:46	2:52	3:04	3:10
3:01	3:07	3:19	3:25
3:16	3:22	3:34	3:40
3:31	3:37	3:49	3:55
3:46	3:52	4:04	4:10
4:01	4:07	4:19	4:25
4:16	4:22	4:34	4:40
4:31	4:37	4:49	4:55
4:46	4:52	5:04	5:10
5:01	5:07	5:19	5:25
5:16	5:22	5:34	5:40
5:31	5:37	5:49	5:55
6:02	6:07	6:18	6:24
6:28	6:33	6:44	6:50
7:00	7:05	7:15	7:21
7:28	7:33	7:43	7:49
7:58	8:03	8:13	8:19
8:28	8:33	8:43	8:49
8:54	8:59	9:09	9:15
9:26	9:31	9:40	9:45

A Saturday or Sunday schedule will be operated on the following holidays and observed holidays

Se operará con horario de sábado o domingo durante los siguientes días festivos y feriados observados

>>> New Year's Day, Presidents' Day, Memorial Day, Independence Day, Labor Day, Thanksgiving, Christmas

The schedules and other information shown in this timetable are subject to change. MTS does not assume responsibility for errors in timetables nor for any inconvenience caused by delayed buses.
Los horarios e información que se indican en este itinerario están sujetos a cambios. MTS no asume responsabilidad por errores en los itinerarios, ni por ningún perjuicio que se origine por los autobuses demorados.

CASH FARES / *Tarifas en efectivo*

Exact fare, please / *Favor de pagar la cantidad exacta*

Day Pass (Regional) / *Pase diario (Regional)* Compass Card required ($2) / *Se requiere un Compass Card ($2)*	**$5.00**
One-Way Fare / *Tarifa de una direccíon*	**$2.25**
Senior (60+)/Disabled/Medicare *Mayores de 60 años/Discapacitados/Medicare*	**$1.10***
Children 5 & under / *Niños de 5 años o menos* Up to two children ride free per paying adult / *Máximo dos niños viajan gratis por cada adulto*	**FREE** / ***GRATIS***

MONTHLY PASSES / *Pases mensual*

Adult / *Adulto*	**$72.00**
Senior (60+)/Disabled/Medicare *Mayores de 60 años/Discapacitados/Medicare*	**$18.00***
Youths (18 and under) *Jóvenes (18 años o menos)*	**$36.00***

*I.D. required for discount fare or pass.
**Se requiere identificación para tarifas o pases de descuento.*

DAY PASS (REGIONAL) / *Pase diario (Regional)*

All passes are sold on Compass Card, which can be reloaded and reused for up to five years. Compass Cards are available for $2 at select outlets. A $5 Day Pass requires a Compass Card. A paper Day Pass can be purchased on board buses for an additional $2 fee.

Todos los pases se venden en el Compass Card, el cual puede ser recargado y reutilizado por hasta cinco años. Compass Cards están disponibles por $2 en selectas sucursales. Un pase de un día por $5 requiere un Compass Card. Un pase de un día de papel se puede obtener a bordo los autobuses por un costo adicional de $2.

DIRECTORY / *Directorio*

Regional Transit Information *Información de transporte público regional*	**511** or/ó **(619) 233-3004**
TTY/TDD (teletype for hearing impaired) *Teletipo para sordos*	**(619) 234-5005** or/ó **(888) 722-4889**
InfoExpress (24-hour info via Touch-Tone phone) *Información las 24 horas (via teléfono de teclas)*	**(619) 685-4900**
Customer Service / Suggestions *Servicio al cliente / Sugerencias*	**(619) 557-4555**
SafeWatch	**(619) 557-4500**
Lost & Found *Objetos extraviados*	**(877) 841-3278**
The Transit Store	**(619) 234-1060** 1st & Broadway, Downtown San Diego M–F 9am–5pm
For MTS online trip planning *Planificación de viajes por Internet*	**www.sdmts.com**

For more information on riding MTS services, pick up a Rider's Guide on a bus or at The Transit Store, or visit **www.sdmts.com**.

*Para obtener más información sobre el uso de los servicios de MTS, recoja un 'Rider's Guide' en un autobús o en The Transit Store, o visita a **www.sdmts.com**.*

Thank you for riding MTS! ***¡Gracias por viajar con MTS!***

Effective JUNE 8, 2014

14

Grantville Trolley – Lake Murray Bl.

via Kaiser Hospital / SDSU

DESTINATIONS

- Allied Gardens Community Park
- Kaiser Hospital
- SD Mission de Alcala
- SDSU

TROLLEY CONNECTIONS

Grantville
Mission San Diego
SDSU
70th St.

MTS Metropolitan Transit System

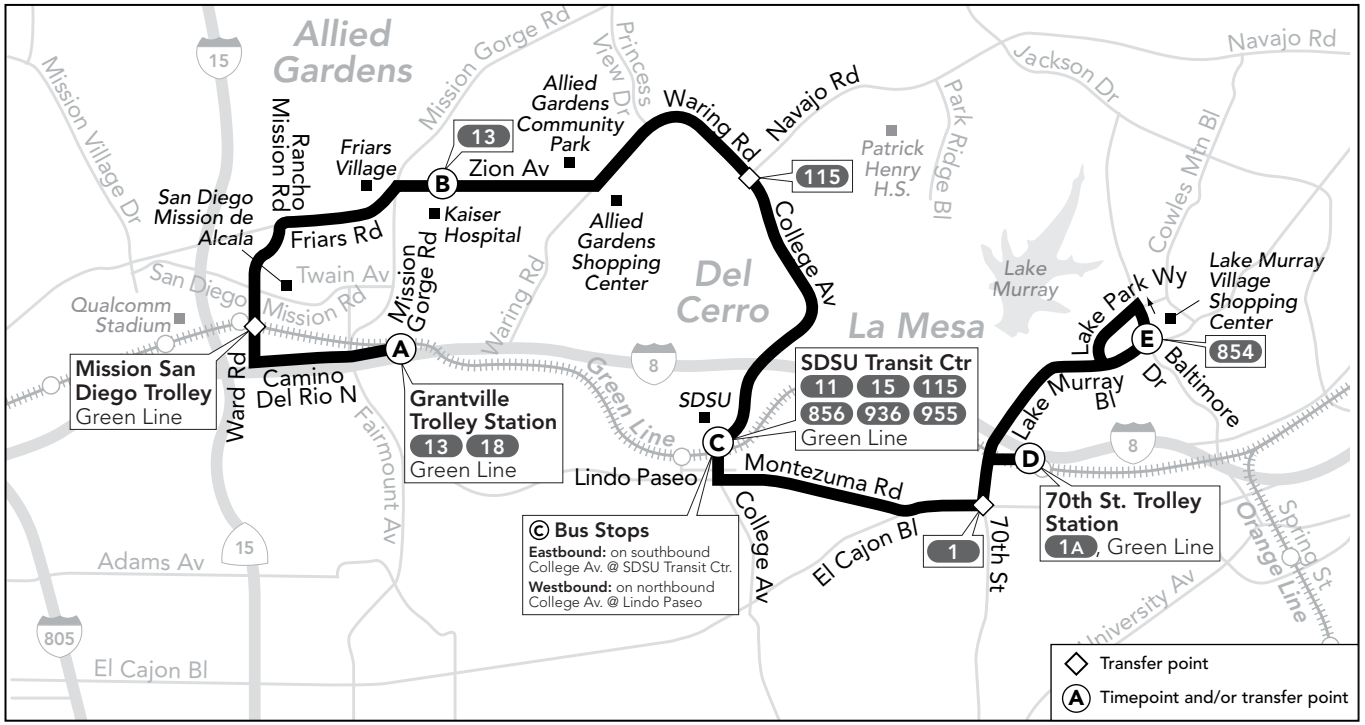

Alternative formats available upon request. Please call: (619) 557-4555 ***Formato alternativo disponible al preguntar. Favor de llamar: (619) 557-4555***

Route 14 – Monday through Friday / *lunes a viernes*

Grantville ➡ La Mesa

Ⓐ Grantville Trolley Station **DEPART**	Ⓑ Kaiser Hospital	Ⓒ SDSU Transit Center (College Av.)	Ⓓ 70th Street Trolley Station	Ⓔ Baltimore Dr. & Lake Murray Bl. **ARRIVE**
5:53a	6:04a	6:18a	6:30a	6:37a
6:52	7:04	7:19	7:32	7:40
7:52	8:04	8:19	8:32	8:40
8:52	9:04	9:19	9:32	9:40
9:52	10:05	10:18	10:30	10:38
10:52	11:05	11:18	11:30	11:38
11:52	**12:05p**	**12:18p**	**12:30p**	**12:38p**
12:52p	**1:05**	**1:19**	**1:32**	**1:41**
1:52	**2:05**	**2:19**	**2:32**	**2:41**
2:52	**3:05**	**3:19**	**3:32**	**3:41**
3:52	**4:05**	**4:19**	**4:32**	**4:41**
4:52	**5:05**	**5:19**	**5:32**	**5:41**
5:52	**6:05**	**6:19**	**6:32**	**6:41**
6:53	**7:05**	**7:18**	**7:31**	**7:39**

La Mesa ➡ Grantville

Ⓔ Baltimore Dr. & Lake Murray Bl. **DEPART**	Ⓓ 70th Street Trolley Station	Ⓒ College Av. & Lindo Paseo (SDSU)	Ⓑ Kaiser Hospital	Ⓐ Grantville Trolley Station **ARRIVE**
6:51a	6:59a	7:10a	7:23a	7:36a
7:49	7:58	8:10	8:23	8:36
8:49	8:58	9:10	9:23	9:36
9:51	9:59	10:11	10:23	10:36
10:51	10:59	11:11	11:23	11:36
11:51	11:59	**12:11p**	**12:23p**	**12:36p**
12:49p	**12:57p**	**1:10**	**1:23**	**1:38**
1:49	**1:57**	**2:10**	**2:23**	**2:38**
2:49	**2:57**	**3:10**	**3:23**	**3:38**
3:49	**3:57**	**4:10**	**4:23**	**4:38**
4:49	**4:57**	**5:10**	**5:23**	**5:38**
5:51	**5:59**	**6:11**	**6:23**	**6:37**

Route 14 does not operate on weekends or on the following holidays and observed holidays
La ruta 14 no ofrece servicio durante el fin de semana ó durante los siguientes días festivos y feriados observados >>> New Year's Day, Presidents' Day, Memorial Day, Independence Day, Labor Day, Thanksgiving, Christmas

compass card
now at Albertsons

The smart card that stores your transit pass and makes riding transit easy!
Buy/reload your Compass Card at Albertsons. Visit **www.511sd.com/compass**

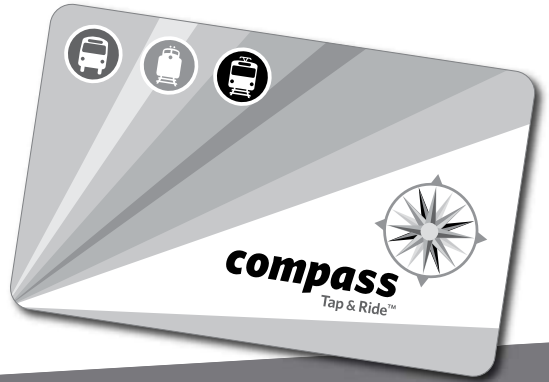

SANDAG MTS NCTD

The schedules and other information shown in this timetable are subject to change. MTS does not assume responsibility for errors in timetables nor for any inconvenience caused by delayed buses.
Los horarios e información que se indican en este itinerario están sujetos a cambios. MTS no asume responsabilidad por errores en los itinerarios, ni por ningún perjuicio que se origine por los autobuses demorados.

Effective SEPTEMBER 2, 2012

18

Grantville – Camino del Rio

CASH FARES / *Tarifas en efectivo*

Exact fare, please / *Favor de pagar la cantidad exacta*

Day Pass (Regional) / *Pase diario (Regional)*	**$5.00**
One-Way Fare / *Tarifa de una direccíon*	**$2.25**
Senior (60+)/Disabled/Medicare *Mayores de 60 años/Discapacitados/Medicare*	**$1.10***
Children 5 & under / *Niños de 5 años o menos* Up to two children ride free per paying adult / *Máximo dos niños viajan gratis por cada adulto*	**FREE** / ***GRATIS***

MONTHLY PASSES / *Pases mensual*

Adult / *Adulto*	**$72.00**
Senior (60+)/Disabled/Medicare *Mayores de 60 años/Discapacitados/Medicare*	**$18.00***
Youths (18 and under) *Jóvenes (18 años o menos)*	**$36.00***

*I.D. required for discount fare or pass.
**Se requiere identificación para tarifas o pases de descuento.*

DAY PASS (REGIONAL) / ***Pase diario (Regional)***

Valid for unlimited travel for one person on Trolley, most MTS buses, NCTD BREEZE and SPRINTER. Valid for a discount on COASTER fares. Not valid on Premium Express, Rural, Access, or special service buses.

Válidos para viajes ilimitados de una sola persona para: el Trolley, la mayoría de los autobuses de MTS, y los servicios del NCTD de BREEZE y SPRINTER. Válidos para acceder a descuentos en el COASTER, pero no para las rutas Premium Express, rurales, Access, ni los servicios especiales.

DIRECTORY / *Directorio*

Regional Transit Information *Información de transporte público regional*	**511** or/ó **(619) 233-3004**
TTY/TDD (teletype for hearing impaired) *Teletipo para sordos*	**(619) 234-5005** or/ó **(888) 722-4889**
InfoExpress (24-hour info via Touch-Tone phone) *Información las 24 horas* (via teléfono de teclas)	**(619) 685-4900**
Customer Service / Suggestions *Servicio al cliente / Sugerencias*	**(619) 557-4555**
SafeWatch	**(619) 557-4500**
Lost & Found *Objetos extraviados*	**(877) 841-3278**
The Transit Store	1st & Broadway, Downtown San Diego M–F 9am–5pm
For MTS online trip planning *Planificación de viajes por Internet*	**www.sdmts.com**

For more information on riding MTS services, pick up a Rider's Guide on a bus or at The Transit Store, or visit **www.sdmts.com**.

*Para obtener más información sobre el uso de los servicios de MTS, recoja un 'Rider's Guide' en un autobús o en The Transit Store, o visita a **www.sdmts.com**.*

Thank you for riding MTS! ***¡Gracias por viajar con MTS!***

DESTINATIONS
- Centerside
- National University

MTS Metropolitan Transit System

TROLLEY CONNECTIONS
Grantville

Alternative formats available upon request. Please call: (619) 557-4555 / *Formato alternativo disponible al preguntar. Favor de llamar: (619) 557-4555*

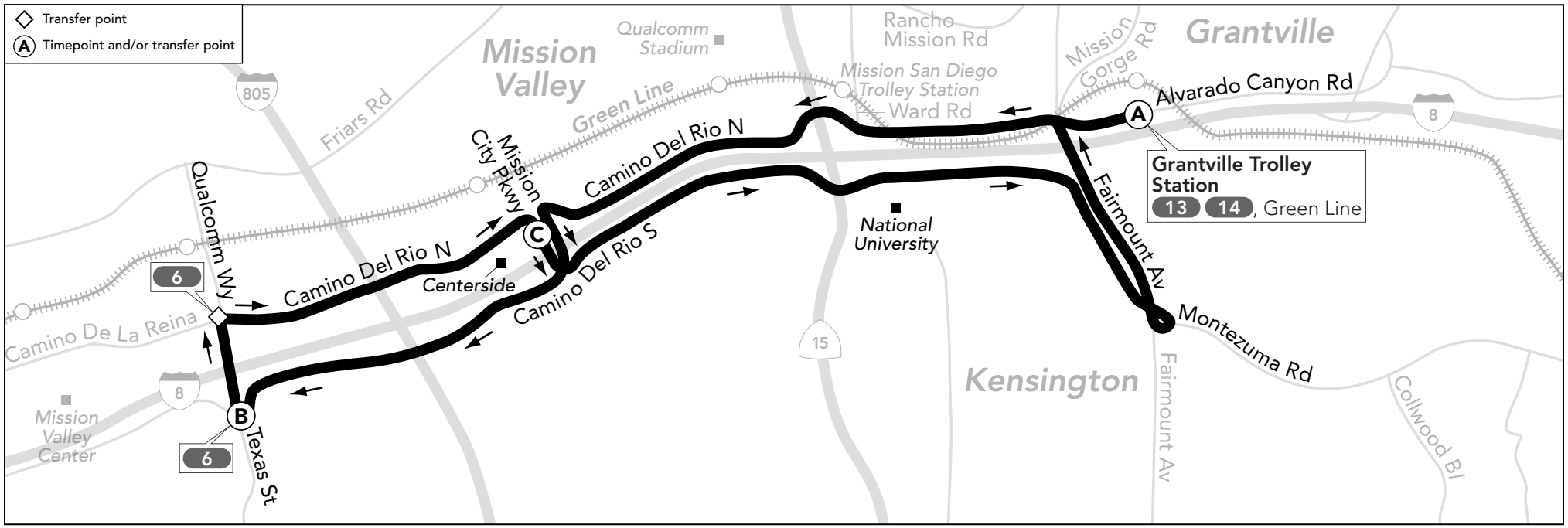

Route 18 – Monday through Friday / *lunes a viernes*

Grantville Trolley Station ➡ Camino del Rio ➡ Grantville Trolley Station

Ⓐ Grantville Trolley Station **DEPART**	Ⓑ Texas St. & Camino del Rio South	Ⓒ Mission City Pkwy. & Camino del Rio North	Ⓐ Grantville Trolley Station **ARRIVE**
6:38a	6:47a	6:50a	7:00a
7:08	7:17	7:20	7:30
7:38	7:47	7:50	8:00
8:08	8:17	8:20	8:30
8:38	8:47	8:50	9:00
9:08	9:17	9:20	9:30
9:38	9:47	9:50	10:00
10:08	10:17	10:20	10:30
10:38	10:47	10:50	11:00
11:08	11:17	11:20	11:30
11:38	11:47	11:50	**12:00p**
12:08p	**12:17p**	**12:20p**	**12:30**
12:38	**12:47**	**12:50**	**1:00**
1:08	**1:17**	**1:20**	**1:30**
1:38	**1:47**	**1:50**	**2:00**
2:08	**2:17**	**2:20**	**2:30**
2:38	**2:47**	**2:50**	**3:00**
3:08	**3:17**	**3:20**	**3:30**
3:38	**3:47**	**3:50**	**4:00**
4:08	**4:17**	**4:20**	**4:30**
4:38	**4:47**	**4:50**	**5:00**
5:08	**5:17**	**5:20**	**5:30**
5:38	**5:47**	**5:50**	**6:00**

Route 18 does not operate on weekends or on the observation of the following holidays

La ruta 18 no ofrece servicio durante el fin de semana o durante los siguientes días festivos

>>>

New Year's Day, Presidents' Day, Memorial Day, Independence Day, Labor Day, Thanksgiving, Christmas

The schedules and other information shown in this timetable are subject to change. MTS does not assume responsibility for errors in timetables nor for any inconvenience caused by delayed buses.

Los horarios e información que se indican en este itinerario están sujetos a cambios. MTS no asume responsabilidad por errores en los itinerarios, ni por ningún perjuicio que se origine por los autobuses demorados.

Plan your trip!

On the web

Visit **www.sdmts.com** and click on ***Travel Planner***

On the phone

Dial 511 and say "public transportation"

On the go

Use the Google Maps app on your smartphone

CASH FARES / *Tarifas en efectivo*

Exact fare, please / *Favor de pagar la cantidad exacta*

Day Pass (Regional) / *Pase diario (Regional)* Compass Card required ($2) / *Se requiere un Compass Card ($2)*	**$5.00**
One-Way Fare / *Tarifa de una direccíon*	**$2.50**
Senior (60+)/Disabled/Medicare *Mayores de 60 años/Discapacitados/Medicare*	**$1.25***
Children 5 & under / *Niños de 5 años o menos* Up to two children ride free per paying adult / *Máximo dos niños viajan gratis por cada adulto*	**FREE / *GRATIS***

MONTHLY PASSES / *Pases mensual*

Adult / *Adulto*	**$72.00**
Senior (60+)/Disabled/Medicare *Mayores de 60 años/Discapacitados/Medicare*	**$18.00***
Youths (18 and under) *Jóvenes (18 años o menos)*	**$36.00***

*I.D. required for discount fare or pass.
**Se requiere identificación para tarifas o pases de descuento.*

DAY PASS (REGIONAL) / *Pase diario (Regional)*

All passes are sold on Compass Card, which can be reloaded and reused for up to five years. Compass Cards are available for $2 at select outlets. A $5 Day Pass requires a Compass Card. A paper Day Pass can be purchased on board buses for an additional $2 fee.

Todos los pases se venden en el Compass Card, el cual puede ser recargado y reutilizado por hasta cinco años. Compass Cards están disponibles por $2 en selectas sucursales. Un pase de un día por $5 requiere un Compass Card. Un pase de un día de papel se puede obtener a bordo los autobuses por un costo adicional de $2.

DIRECTORY / *Directorio*

Regional Transit Information *Información de transporte público regional*	**511** or/ó **(619) 233-3004**
TTY/TDD (teletype for hearing impaired) *Teletipo para sordos*	**(619) 234-5005** or/ó **(888) 722-4889**
InfoExpress (24-hour info via Touch-Tone phone) *Información las 24 horas (via teléfono de teclas)*	**(619) 685-4900**
Customer Service / Suggestions *Servicio al cliente / Sugerencias*	**(619) 557-4555**
SafeWatch	**(619) 557-4500**
The Transit Store / Lost & Found *The Transit Store / Objetos extraviados*	**(619) 234-1060**
Articles found on the bus are turned in at The Transit Store *Artículos encontrados en los autobuses son entregados a The Transit Store*	1st & Broadway Downtown San Diego M–F 9am–5pm
For MTS online trip planning *Planificación de viajes por Internet*	**www.sdmts.com**

For more information on riding MTS services, pick up a Rider's Guide on a bus or at The Transit Store, or visit **www.sdmts.com**.

*Para obtener más información sobre el uso de los servicios de MTS, recoja un 'Rider's Guide' en un autobús o en The Transit Store, o visita a **www.sdmts.com**.*

Thank you for riding MTS! ***¡Gracias por viajar con MTS!***

Effective OCTOBER 12, 2014

20

Downtown – Rancho Bernardo Station
via Fashion Valley

110

Downtown – Mira Mesa Express
via I-15 / Hwy 163

DESTINATIONS

- City College
- Downtown Courthouses (110)
- Fashion Valley Mall (20)
- Miramar College
- Mira Mesa MarketCenter

TROLLEY CONNECTIONS
City College
Fashion Valley (20)

MTS Metropolitan Transit System

Alternative formats available upon request. Please call: (619) 557-4555 / *Formato alternativo disponible al preguntar. Favor de llamar: (619) 557-4555*

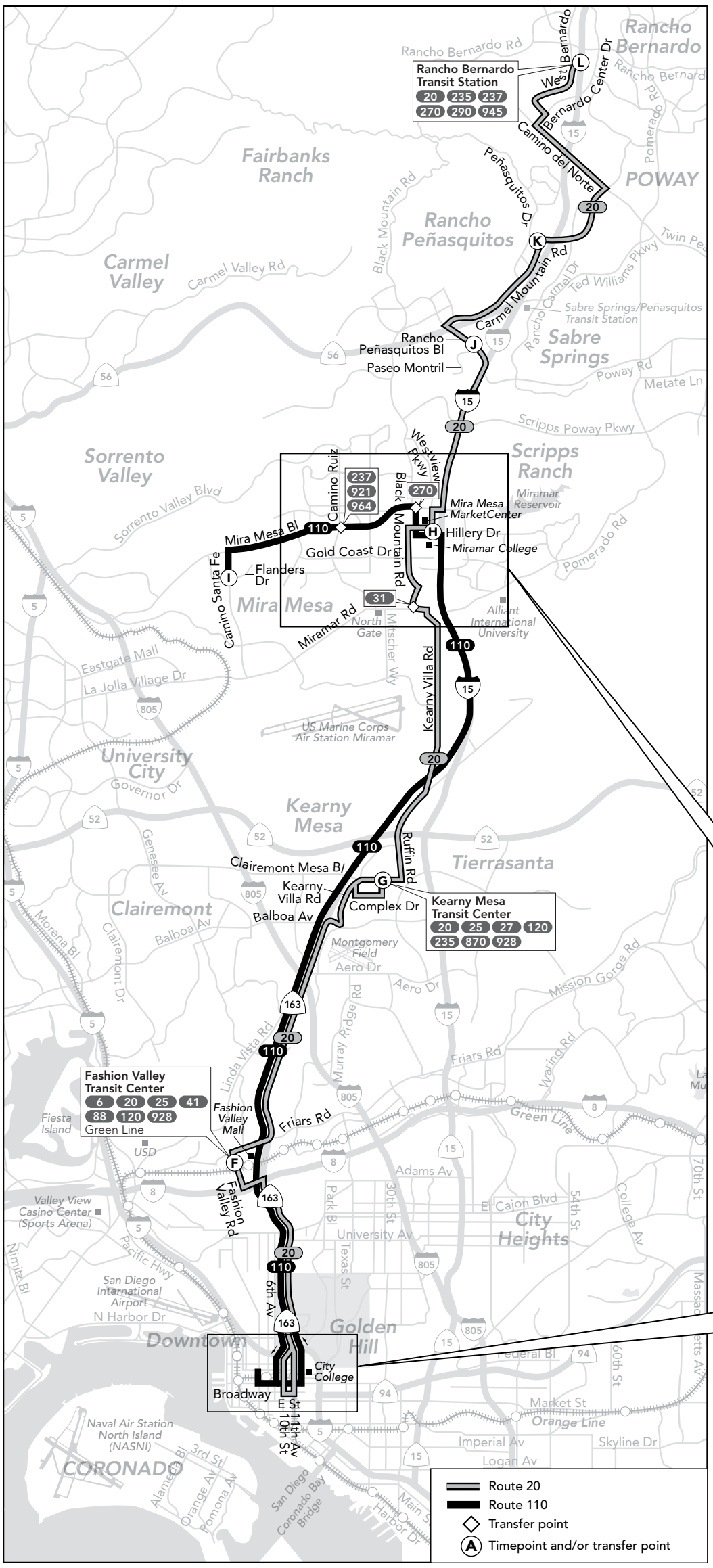

Route 110 – Monday through Friday / *lunes a viernes*

Morning only

Mira Mesa ➡ Downtown

(I) Camino Santa Fe & Flanders Dr. **DEPART**	(H) Miramar College Transit Station	(D) 10th Av. & B St.	(C) Broadway & 4th Av.	(B) Broadway & 1st Av. **ARRIVE**
6:03a	6:15a	6:36a	6:40a	6:46a
6:22	6:35	6:58	7:02	7:09
6:42	6:55	7:18	7:22	7:29
7:06	7:20	7:45	7:50	7:57

Route 110 – Monday through Friday / *lunes a viernes*

Afternoon only

Downtown ➡ Mira Mesa

(A) Front St. & B St. **DEPART**	(C) Broadway & 3rd Av.	(E) City College Trolley (11th & B)	(H) Miramar College Transit Station	(I) Camino Santa Fe & Flanders Dr. **ARRIVE**
4:00p	**4:05p**	**4:12p**	**4:35p**	**4:50p**
4:25	**4:30**	**4:37**	**5:02**	**5:18**
4:50	**4:55**	**5:02**	**5:27**	**5:43**
5:20	**5:25**	**5:32**	**5:57**	**6:13**

The schedules and other information shown in this timetable are subject to change. MTS does not assume responsibility for errors in timetables nor for any inconvenience caused by delayed buses.

Los horarios e información que se indican en este itinerario están sujetos a cambios. MTS no asume responsabilidad por errores en los itinerarios, ni por ningún perjuicio que se origine por los autobuses demorados.

Mira Mesa detail

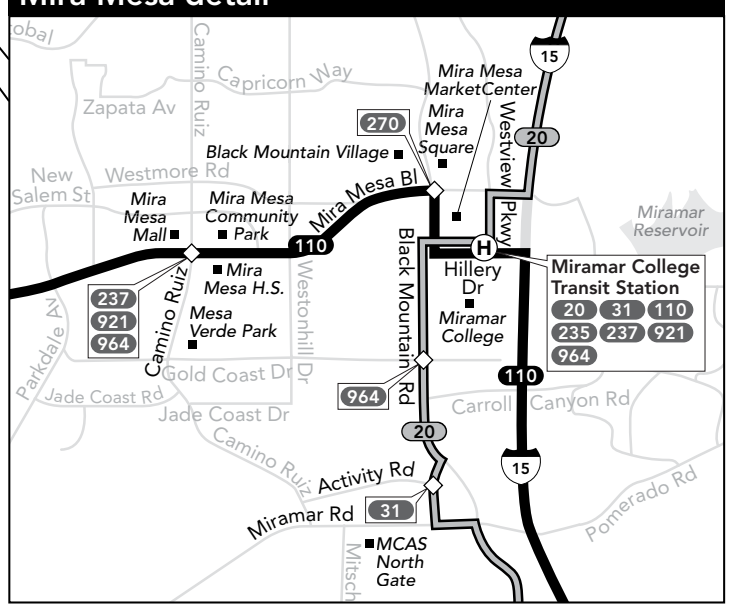

Downtown detail

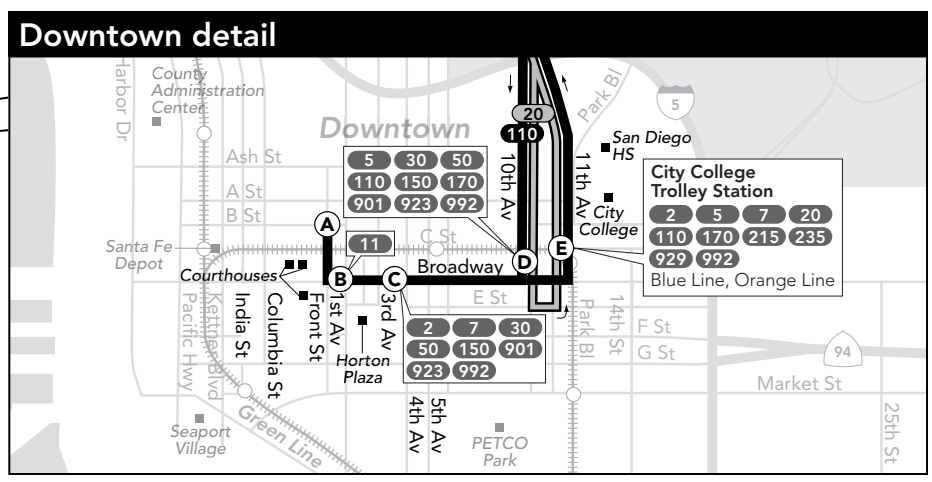

A Saturday or Sunday schedule will be operated on the following holidays and observed holidays >>> New Year's Day, Presidents' Day, Memorial Day, Independence Day, Labor Day, Thanksgiving, Christmas

Se operará con horario de sábado o domingo durante los siguientes días festivos y feriados observados

Route 20 – Monday through Friday / *lunes a viernes*

Downtown ➡ Kearny Mesa ➡ Rancho Bernardo

D 10th Av. & Broadway DEPART	E City College Trolley Station (11th & C)	F Fashion Valley Transit Center ARRIVE	F Fashion Valley Transit Center DEPART	G Kearny Mesa Transit Center	H Miramar College Transit Station	J Rancho Peñasquitos & Paseo Montril	K Carmel Mtn. & Peñasquitos Dr.	L R. Bernardo Transit Station ARRIVE
—	4:55a	5:06a	5:08a	5:20a	5:37a	5:44a	5:52a	6:07a
—	5:25	5:36	5:38	5:51	6:10	6:17	6:25	6:41
—	5:40	5:51	5:53	6:07	6:29	6:37	6:45	7:02
—	5:55	6:06	6:08	6:22	—	—	—	—
—	6:10	6:21	6:23	6:37	7:02	7:10	7:19	7:37
6:22a	6:25	6:36	6:38	6:52	—	—	—	—
6:37	6:40	6:51	6:53	7:07	7:32	7:40	7:49	8:07
6:52	6:55	7:06	7:08	7:22	—	—	—	—
7:07	7:10	7:21	7:23	7:37	8:02	8:10	8:19	8:37
7:22	7:25	7:36	7:38	7:52	—	—	—	—
7:37	7:40	7:51	7:53	8:07	8:32	8:40	8:49	9:07
7:52	7:55	8:06	8:08	8:22	—	—	—	—
8:07	8:10	8:21	8:23	8:37	9:02	9:10	9:19	9:37
8:22	8:25	8:36	8:38	8:52	—	—	—	—
8:37	8:40	8:51	8:53	9:08	9:31	9:39	9:48	10:06
8:52	8:55	9:06	9:08	9:23	—	—	—	—
9:07	9:10	9:21	9:23	9:38	10:01	10:09	10:18	10:36
9:37	9:40	9:51	9:53	10:08	10:31	10:39	10:48	11:06
10:07	10:10	10:21	10:23	10:38	11:01	11:09	11:18	11:36
10:37	10:40	10:51	10:53	11:08	11:31	11:39	11:48	12:06p
11:07	11:10	11:21	11:23	11:38	12:01p	12:09p	12:18p	12:36
11:37	11:40	11:51	11:53	12:08p	12:31	12:39	12:48	1:06
12:07p	12:10p	12:21p	12:23p	12:38	1:01	1:09	1:18	1:36
12:37	12:40	12:52	12:54	1:10	1:33	1:42	1:52	2:10
1:07	1:10	1:22	1:24	1:40	2:04	2:13	2:23	2:41
1:37	1:40	1:52	1:54	2:10	2:34	2:43	2:53	3:11
2:07	2:10	2:23	2:25	2:41	3:07	3:16	3:27	3:45
2:37	2:40	2:53	2:55	3:11	3:37	3:46	3:57	4:15
2:52	2:55	3:08	3:10	3:26	—	—	—	—
3:07	3:10	3:23	3:25	3:41	4:07	4:16	4:27	4:45
3:22	3:25	3:38	3:40	3:56	—	—	—	—
3:37	3:40	3:53	3:55	4:11	4:37	4:46	4:57	5:15
3:52	3:55	4:08	4:10	4:26	—	—	—	—
4:07	4:10	4:23	4:25	4:41	5:07	5:16	5:27	5:45
4:22	4:25	4:38	4:40	4:56	—	—	—	—
4:37	4:40	4:53	4:55	5:11	5:37	5:46	5:57	6:15
4:52	4:55	5:08	5:10	5:26	—	—	—	—
5:07	5:10	5:23	5:25	5:41	6:05	6:14	6:25	6:42
5:22	5:25	5:38	5:40	5:56	—	—	—	—
5:37	5:40	5:52	5:54	6:09	6:32	6:41	6:51	7:07
5:52	5:55	6:07	6:09	6:24	—	—	—	—
6:07	6:10	6:21	6:23	6:37	6:58	7:07	7:16	7:31
6:37	6:40	6:51	6:53	7:07	7:28	7:37	7:46	8:01
7:06	7:09	7:20	7:22	7:35	7:54	8:02	8:10	8:24
7:36	7:39	7:50	7:52	8:05	8:24	8:32	8:40	8:54
8:36	8:39	8:50	8:52	9:05	9:23	9:30	9:38	9:52

Rancho Bernardo ➡ Kearny Mesa ➡ Downtown

L Rancho Bernardo Transit Station DEPART	K Carmel Mtn. & Peñasquitos Dr.	J Rancho Peñasquitos & Paseo Montril	H Miramar College Transit Station	G Kearny Mesa Transit Center	F Fashion Valley Transit Center ARRIVE	F Fashion Valley Transit Center DEPART	D 10th Av. & Broadway ARRIVE
4:58a	5:13a	5:21a	5:30a	5:49a	6:01a	6:03a	6:12a
—	—	—	—	6:05	6:17	6:19	6:28
5:26	5:42	5:51	6:00	6:20	6:33	6:35	6:45
—	—	—	—	6:35	6:48	6:50	7:00
5:52	6:09	6:19	6:30	6:52	7:05	7:07	7:18
—	—	—	—	7:06	7:19	7:21	7:33
6:19	6:37	6:49	7:00	7:23	7:36	7:38	7:50
—	—	—	—	7:38	7:51	7:53	8:05
6:49	7:07	7:19	7:30	7:53	8:06	8:08	8:20
—	—	—	—	8:08	8:21	8:23	8:35
7:19	7:37	7:49	8:00	8:23	8:36	8:38	8:50
—	—	—	—	8:38	8:51	8:53	9:05
7:49	8:07	8:19	8:30	8:53	9:06	9:08	9:20
—	—	—	—	9:08	9:21	9:23	9:35
8:21	8:39	8:51	9:00	9:22	9:35	9:37	9:48
8:51	9:09	9:21	9:30	9:52	10:05	10:07	10:18
9:25	9:42	9:52	10:00	10:22	10:36	10:38	10:49
9:55	10:12	10:22	10:30	10:52	11:06	11:08	11:19
10:25	10:42	10:52	11:00	11:22	11:36	11:38	11:49
10:55	11:12	11:22	11:30	11:52	12:06p	12:08p	12:19p
11:24	11:42	11:52	12:00p	12:23p	12:37	12:39	12:50
11:54	12:12p	12:22p	12:30	12:53	1:07	1:09	1:20
12:24p	12:42	12:52	1:00	1:23	1:37	1:39	1:50
12:54	1:12	1:22	1:30	1:53	2:07	2:09	2:20
1:24	1:42	1:52	2:00	2:23	2:37	2:39	2:50
—	—	—	—	2:38	2:52	2:54	3:05
1:54	2:12	2:22	2:30	2:53	3:07	3:09	3:20
—	—	—	—	3:08	3:22	3:24	3:35
2:24	2:42	2:52	3:00	3:23	3:37	3:39	3:50
—	—	—	—	3:38	3:52	3:54	4:05
2:51	3:10	3:20	3:29	3:53	4:08	4:10	4:22
—	—	—	—	4:08	4:23	4:25	4:37
3:19	3:38	3:48	3:57	4:21	4:37	4:39	4:51
—	—	—	—	4:36	4:52	4:54	5:06
3:49	4:08	4:18	4:27	4:52	5:08	5:10	5:22
—	—	—	—	5:07	5:23	5:25	5:37
4:18	4:38	4:48	4:57	5:22	5:38	5:40	5:53
—	—	—	—	5:37	5:53	5:55	6:08
4:48	5:08	5:18	5:27	5:52	6:08	6:10	6:23
—	—	—	—	6:07	6:23	6:25	6:37
5:19	5:39	5:49	5:58	6:21	6:36	6:38	6:50
5:49	6:09	6:19	6:28	6:50	7:04	7:06	7:17
6:24	6:42	6:52	7:01	7:21	7:34	7:36	7:47
7:10	7:27	7:36	7:45	8:05	8:17	8:19	8:29
8:15	8:30	8:39	8:47	9:05	9:17	9:19	9:29
9:18	9:32	9:40	9:48	10:05	10:17	10:19	10:28
10:16	10:30	10:38	10:46	11:03	11:15	11:17	11:26

Route 20 – Saturday / *sábado*

Downtown ➡ Kearny Mesa ➡ Rancho Bernardo

D 10th Av. & Broadway DEPART	E City College Trolley Station (11th & C)	F Fashion Valley Transit Center ARRIVE	F Fashion Valley Transit Center DEPART	G Kearny Mesa Transit Center	H Miramar College Transit Station	J Rancho Peñasquitos & Paseo Montril	K Carmel Mtn. & Peñasquitos Dr.	L R. Bernardo Transit Station ARRIVE
—	5:40a	5:50a	5:52a	6:05a	6:23a	6:29a	6:37a	6:52a
—	6:10	6:20	6:22	6:35	6:53	6:59	7:07	7:22
6:37a	6:40	6:51	6:53	7:07	7:26	—	—	—
7:07	7:10	7:21	7:23	7:37	7:56	8:03	8:11	8:27
7:37	7:40	7:51	7:53	8:07	8:26	—	—	—
8:07	8:10	8:21	8:23	8:37	8:57	9:04	9:13	9:30
8:37	8:40	8:51	8:53	9:07	9:27	—	—	—
9:07	9:10	9:21	9:23	9:37	9:57	10:04	10:13	10:30
9:37	9:40	9:51	9:53	10:07	10:27	—	—	—
10:07	10:10	10:21	10:23	10:37	10:57	11:04	11:13	11:30
10:37	10:40	10:52	10:54	11:09	11:29	—	—	—
11:07	11:10	11:22	11:24	11:39	11:59	12:07p	12:17p	12:35p
11:37	11:40	11:52	11:54	12:09p	12:29p	—	—	—
12:07p	12:10p	12:22p	12:24p	12:39	12:59	1:07	1:17	1:35
12:37	12:40	12:52	12:54	1:09	1:29	—	—	—
1:07	1:10	1:22	1:24	1:39	1:59	2:07	2:17	2:35
1:37	1:40	1:52	1:54	2:09	2:29	—	—	—
2:07	2:10	2:22	2:24	2:39	2:59	3:07	3:17	3:35
2:37	2:40	2:52	2:54	3:09	3:29	—	—	—
3:07	3:10	3:22	3:24	3:39	3:59	4:07	4:17	4:35
3:37	3:40	3:52	3:54	4:09	4:29	—	—	—
4:07	4:10	4:22	4:24	4:39	4:59	5:07	5:17	5:35
4:37	4:40	4:52	4:54	5:09	5:29	—	—	—
5:07	5:10	5:22	5:24	5:39	5:59	6:07	6:17	6:35
5:37	5:40	5:52	5:54	6:09	6:29	—	—	—
6:07	6:10	6:21	6:23	6:37	6:56	7:04	7:13	7:30
7:07	7:10	7:21	7:23	7:36	7:55	8:03	8:11	8:26
8:07	8:10	8:21	8:23	8:36	—	—	—	—

Rancho Bernardo ➡ Kearny Mesa ➡ Downtown

L Rancho Bernardo Transit Station DEPART	K Carmel Mtn. & Peñasquitos Dr.	J Rancho Peñasquitos & Paseo Montril	H Miramar College Transit Station	G Kearny Mesa Transit Center	F Fashion Valley Transit Center ARRIVE	F Fashion Valley Transit Center DEPART	D 10th Av. & Broadway ARRIVE
5:07a	5:20a	5:28a	5:36a	5:52a	6:05a	6:07a	6:16a
6:07	6:20	6:28	6:36	6:52	7:05	7:07	7:16
—	—	—	7:06	7:23	7:36	7:38	7:48
7:05	7:19	7:28	7:36	7:53	8:06	8:08	8:18
—	—	—	8:05	8:23	8:36	8:38	8:48
8:02	8:17	8:27	8:35	8:53	9:06	9:08	9:18
—	—	—	9:05	9:23	9:36	9:38	9:48
9:02	9:17	9:27	9:35	9:53	10:06	10:08	10:18
—	—	—	10:04	10:22	10:36	10:38	10:48
9:58	10:15	10:25	10:34	10:52	11:06	11:08	11:18
—	—	—	11:04	11:22	11:36	11:38	11:48
10:58	11:15	11:25	11:34	11:52	12:06p	12:08p	12:18p
—	—	—	12:05p	12:23p	12:37	12:39	12:49
11:59	12:16p	12:26p	12:35	12:53	1:07	1:09	1:19
—	—	—	1:04	1:22	1:37	1:39	1:50
12:57p	1:15	1:25	1:34	1:52	2:07	2:09	2:20
—	—	—	2:04	2:22	2:37	2:39	2:50
1:57	2:15	2:25	2:34	2:52	3:07	3:09	3:20
—	—	—	3:04	3:22	3:37	3:39	3:50
2:57	3:15	3:25	3:34	3:52	4:07	4:09	4:20
—	—	—	4:04	4:22	4:37	4:39	4:50
3:57	4:15	4:25	4:34	4:52	5:07	5:09	5:20
—	—	—	5:04	5:22	5:37	5:39	5:50
4:57	5:15	5:25	5:34	5:52	6:07	6:09	6:20
—	—	—	6:05	6:22	6:36	6:38	6:49
6:00	6:17	6:26	6:35	6:52	7:06	7:08	7:19
—	—	—	7:05	7:22	7:35	7:37	7:47
7:02	7:18	7:27	7:35	7:52	8:05	8:07	8:17
8:04	8:19	8:27	8:35	8:52	9:05	9:07	9:17

Route 20 – Sunday / *domingo*

Downtown ➡ Kearny Mesa ➡ Rancho Bernardo

D 10th Av. & Broadway DEPART	E City College Trolley Station (11th & C)	F Fashion Valley Transit Center ARRIVE	F Fashion Valley Transit Center DEPART	G Kearny Mesa Transit Center	H Miramar College Transit Station	J Rancho Peñasquitos & Paseo Montril	K Carmel Mtn. & Peñasquitos Dr.	L R. Bernardo Transit Station ARRIVE
—	6:10a	6:20a	6:22a	6:35a	6:53a	6:59a	7:07a	7:22a
7:07a	7:10	7:21	7:23	7:37	7:56	8:03	8:11	8:27
8:07	8:10	8:21	8:23	8:37	8:57	9:04	9:13	9:30
9:07	9:10	9:21	9:23	9:37	9:57	10:04	10:13	10:30
10:07	10:10	10:21	10:23	10:37	10:57	11:04	11:13	11:30
11:07	11:10	11:22	11:24	11:39	11:59	12:07p	12:17p	12:35p
12:07p	12:10p	12:22p	12:24p	12:39p	12:59p	1:07	1:17	1:35
1:07	1:10	1:22	1:24	1:39	1:59	2:07	2:17	2:35
2:07	2:10	2:22	2:24	2:39	2:59	3:07	3:17	3:35
3:07	3:10	3:22	3:24	3:39	3:59	4:07	4:17	4:35
4:07	4:10	4:22	4:24	4:39	4:59	5:07	5:17	5:35
5:07	5:10	5:22	5:24	5:39	5:59	6:07	6:17	6:35
6:07	6:10	6:21	6:23	6:37	6:56	7:04	7:13	7:30
7:07	7:10	7:21	7:23	7:36	7:55	8:03	8:11	8:26
8:07	8:10	8:21	8:23	8:36	—	—	—	—

Rancho Bernardo ➡ Kearny Mesa ➡ Downtown

L Rancho Bernardo Transit Station DEPART	K Carmel Mtn. & Peñasquitos Dr.	J Rancho Peñasquitos & Paseo Montril	H Miramar College Transit Station	G Kearny Mesa Transit Center	F Fashion Valley Transit Center ARRIVE	F Fashion Valley Transit Center DEPART	D 10th Av. & Broadway ARRIVE
6:07a	6:20a	6:28a	6:36a	6:52a	7:05a	7:07a	7:16a
7:05	7:19	7:28	7:36	7:53	8:06	8:08	8:18
8:02	8:17	8:27	8:35	8:53	9:06	9:08	9:18
9:02	9:17	9:27	9:35	9:53	10:06	10:08	10:18
9:58	10:15	10:25	10:34	10:52	11:06	11:08	11:18
10:58	11:15	11:25	11:34	11:52	12:06p	12:08p	12:18p
11:59	12:16p	12:26p	12:35p	12:53p	1:07	1:09	1:19
12:57p	1:15	1:25	1:34	1:52	2:07	2:09	2:20
1:57	2:15	2:25	2:34	2:52	3:07	3:09	3:20
2:57	3:15	3:25	3:34	3:52	4:07	4:09	4:20
3:57	4:15	4:25	4:34	4:52	5:07	5:09	5:20
4:57	5:15	5:25	5:34	5:52	6:07	6:09	6:20
6:00	6:17	6:26	6:35	6:52	7:06	7:08	7:19
7:02	7:18	7:27	7:35	7:52	8:05	8:07	8:17

CASH FARES / *Tarifas en efectivo*

Exact fare, please / *Favor de pagar la cantidad exacta*

Day Pass (Regional) / *Pase diario (Regional)* Compass Card required ($2) / *Se requiere un Compass Card ($2)*	**$5.00**
One-Way Fare / *Tarifa de una direccíon*	**$2.25**
Senior (60+)/Disabled/Medicare *Mayores de 60 años/Discapacitados/Medicare*	**$1.10***
Children 5 & under / *Niños de 5 años o menos* Up to two children ride free per paying adult / *Máximo dos niños viajan gratis por cada adulto*	**FREE** / ***GRATIS***

MONTHLY PASSES / *Pases mensual*

Adult / *Adulto*	**$72.00**
Senior (60+)/Disabled/Medicare *Mayores de 60 años/Discapacitados/Medicare*	**$18.00***
Youths (18 and under) *Jóvenes (18 años o menos)*	**$36.00***

*I.D. required for discount fare or pass.
**Se requiere identificación para tarifas o pases de descuento.*

DAY PASS (REGIONAL) / *Pase diario (Regional)*

All passes are sold on Compass Card, which can be reloaded and reused for up to five years. Compass Cards are available for $2 at select outlets. A $5 Day Pass requires a Compass Card. A paper Day Pass can be purchased on board buses for an additional $2 fee.

Todos los pases se venden en el Compass Card, el cual puede ser recargado y reutilizado por hasta cinco años. Compass Cards están disponibles por $2 en selectas sucursales. Un pase de un día por $5 requiere un Compass Card. Un pase de un día de papel se puede obtener a bordo los autobuses por un costo adicional de $2.

DIRECTORY / *Directorio*

Regional Transit Information *Información de transporte público regional*	**511** or/ó **(619) 233-3004**
TTY/TDD (teletype for hearing impaired) *Teletipo para sordos*	**(619) 234-5005** or/ó **(888) 722-4889**
InfoExpress (24-hour info via Touch-Tone phone) *Información las 24 horas (via teléfono de teclas)*	**(619) 685-4900**
Customer Service / Suggestions *Servicio al cliente / Sugerencias*	**(619) 557-4555**
SafeWatch	**(619) 557-4500**
Lost & Found *Objetos extraviados*	Route 25: **(877) 841-3278** or/ó Route 928: **(619) 427-5660** **(800) 409-3310**
The Transit Store	**(619) 234-1060** 1st & Broadway, Downtown San Diego M–F 9am–5pm
For MTS online trip planning *Planificación de viajes por Internet*	**www.sdmts.com**

For more information on riding MTS services, pick up a Rider's Guide on a bus or at The Transit Store, or visit **www.sdmts.com**.

*Para obtener más información sobre el uso de los servicios de MTS, recoja un 'Rider's Guide' en un autobús o en The Transit Store, o visita a **www.sdmts.com**.*

Thank you for riding MTS! ***¡Gracias por viajar con MTS!***

Effective JUNE 8, 2014

25 — Fashion Valley – Kearny Mesa
via Linda Vista / Stonecrest

928 — Fashion Valley – Kearny Mesa
via Serra Mesa / Stonecrest

DESTINATIONS

- Children's Hospital (25)
- Fashion Valley Mall
- Hazard Center (928)
- Kearny Mesa Courthouse
- Linda Vista Park & Rec Center (25)
- Serra High School (25)
- Sharp Hospital (25)
- Stonecrest Plaza

TROLLEY CONNECTIONS
Fashion Valley

MTS Metropolitan Transit System

Alternative formats available upon request. Please call: (619) 557-4555 / *Formato alternativo disponible al preguntar. Favor de llamar: (619) 557-4555*

Route 25 – Monday through Friday / *lunes a viernes*

Fashion Valley ➡ Linda Vista ➡ Tierrasanta ➡ Kearny Mesa

(A) Fashion Valley Transit Center **DEPART**	(B) Comstock St. & Linda Vista Rd.	(C) Sharp Hospital (Health Center & Frost)	(E) Stonecrest Plaza	(F) Tierrasanta Bl. & Santo Rd.	(G) Clairemont Mesa Bl. & Santo Rd.	(I) Kearny Mesa Transit Center **ARRIVE**
—	—	—	6:41a	6:47a	6:51a	6:59a
7:10a	7:17a	7:28a	7:39	7:45	7:49	7:57
8:12	8:19	8:30	8:41	8:47	8:51	8:59
9:12	9:19	9:30	9:41	9:47	9:51	9:59
10:12	10:19	10:30	10:41	10:47	10:51	10:59
11:12	11:19	11:30	11:41	11:47	11:51	11:59
12:12p	**12:19p**	**12:30p**	**12:41p**	**12:47p**	**12:51p**	**12:59p**
1:12	**1:19**	**1:31**	**1:44**	**1:51**	**1:55**	**2:03**
2:12	**2:19**	**2:31**	**2:44**	**2:51**	**2:55**	**3:03**
3:14	**3:21**	**3:33**	**3:46**	**3:53**	**3:57**	**4:05**
4:14	**4:21**	**4:33**	**4:46**	**4:53**	**4:57**	**5:05**
5:16	**5:23**	**5:35**	**5:48**	**5:55**	**5:59**	**6:07**
6:18	**6:25**	**6:37**	**6:50**	**6:57**	**7:01**	**7:09**

Kearny Mesa ➡ Tierrasanta ➡ Linda Vista ➡ Fashion Valley

(I) Kearny Mesa Transit Center• **DEPART**	(G) Clairemont Mesa Bl. & Santo Rd.	(F) Santo Rd. & Tierrasanta Bl.	(E) Stonecrest Plaza	(C) Sharp Hospital (Health Center & Frost)	(B) Comstock St. & Linda Vista Rd.	(A) Fashion Valley Transit Center **ARRIVE**
—	—	—	6:21a	6:36a	6:47a	6:54a
7:12a	7:18a	7:23a	7:32	7:47	7:58	8:05
8:12	8:18	8:23	8:32	8:47	8:58	9:05
9:12	9:18	9:23	9:32	9:47	9:58	10:05
10:10	10:16	10:21	10:30	10:45	10:56	11:03
11:10	11:16	11:21	11:30	11:45	11:56	**12:03p**
12:10p	**12:16p**	**12:21p**	**12:30p**	**12:45p**	**12:56p**	**1:03**
1:09	**1:15**	**1:20**	**1:29**	**1:45**	**1:57**	**2:05**
2:10	**2:16**	**2:21**	**2:30**	**2:46**	**2:58**	**3:06**
3:11	**3:17**	**3:22**	**3:31**	**3:47**	**3:59**	**4:07**
4:13	**4:19**	**4:24**	**4:33**	**4:49**	**5:01**	**5:09**
5:15	**5:21**	**5:26**	**5:35**	**5:51**	**6:03**	**6:11**
6:17	**6:23**	**6:28**	**6:36**	**6:50**	**7:01**	**7:08**

• = Board bus on Clairemont Mesa Bl. in front of Spice House Restaurant / *Encuentra el autobús en Clairemont Mesa Bl. en frente del restaurante Spice House*

Route 25 does not operate on weekends or on the following holidays and observed holidays:
La ruta 25 no ofrece servicio durante el fin de semana ó durante los siguientes días festivos y feriados observados: >>> New Year's Day, Presidents' Day, Memorial Day, Independence Day, Labor Day, Thanksgiving, Christmas

The schedules and other information shown in this timetable are subject to change. MTS does not assume responsibility for errors in timetables nor for any inconvenience caused by delayed buses.
Los horarios e información que se indican en este itinerario están sujetos a cambios. MTS no asume responsabilidad por errores en los itinerarios, ni por ningún perjuicio que se origine por los autobuses demorados.

Route 928 – Monday through Friday / *lunes a viernes*

Fashion Valley ➡ Kearny Mesa

Ⓐ Fashion Valley T.C. **DEPART**	Ⓓ Sandrock & Murray Ridge	Ⓔ Stonecrest Plaza	Ⓗ Ruffin Rd. & Balboa Av.	Ⓘ Kearny Mesa T.C. **ARRIVE**
5:25a	5:38a	5:48a	5:54a	6:01a
5:55	6:08	6:18	6:24	6:31
6:25	6:38	6:48	6:54	7:01
6:55	7:08	7:18	7:24	7:31
7:25	7:38	7:48	7:54	8:01
7:55	8:08	8:18	8:24	8:31
8:25	8:38	8:48	8:54	9:01
8:55	9:08	9:18	9:24	9:31
9:25	9:38	9:48	9:54	10:01
9:55	10:08	10:18	10:24	10:31
10:25	10:38	10:48	10:54	11:01
10:55	11:08	11:18	11:24	11:31
11:25	11:39	11:50	11:56	**12:04p**
11:55	**12:09p**	**12:20p**	**12:27p**	**12:35**
12:25p	**12:39**	**12:50**	**12:57**	**1:05**
12:55	**1:09**	**1:20**	**1:27**	**1:35**
1:25	**1:39**	**1:50**	**1:57**	**2:05**
1:55	**2:09**	**2:20**	**2:27**	**2:35**
2:25	**2:39**	**2:50**	**2:57**	**3:05**
2:55	**3:09**	**3:20**	**3:27**	**3:35**
3:19	**3:34**	**3:45**	**3:54**	**4:02**
3:49	**4:04**	**4:15**	**4:24**	**4:32**
4:19	**4:34**	**4:45**	**4:54**	**5:02**
4:49	**5:04**	**5:15**	**5:24**	**5:32**
5:19	**5:34**	**5:45**	**5:54**	**6:02**
5:49	**6:04**	**6:15**	**6:22**	**6:30**
6:19	**6:34**	**6:45**	**6:52**	**7:00**
6:55	**7:09**	**7:19**	—	—
7:37	**7:51**	**8:01**	**8:07**	**8:14**
8:35	**8:48**	**8:58**	—	—
9:37	**9:50**	**10:00**	—	—

Kearny Mesa ➡ Fashion Valley

Ⓘ Kearny Mesa T.C. **DEPART**	Ⓗ Ruffin Rd. & Balboa Av.	Ⓔ Stonecrest Plaza	Ⓓ Sandrock & Murray Ridge	Ⓐ Fashion Valley T.C. **ARRIVE**
—	—	4:47a	4:55a	5:10a
—	—	5:33	5:41	5:56
5:54a	5:58a	6:03	6:11	6:26
6:28	6:33	6:39	6:48	7:04
6:58	7:03	7:09	7:18	7:34
7:28	7:33	7:39	7:48	8:04
7:58	8:03	8:09	8:18	8:34
8:28	8:33	8:39	8:48	9:04
8:58	9:03	9:09	9:18	9:34
9:17	9:22	9:29	9:39	9:55
9:47	9:52	9:59	10:09	10:25
10:17	10:22	10:29	10:39	10:55
10:47	10:52	10:59	11:09	11:25
11:25	11:30	11:37	11:49	**12:05p**
11:55	**12:00p**	**12:07p**	**12:19p**	**12:35**
12:25p	**12:30**	**12:37**	**12:49**	**1:05**
12:55	**1:00**	**1:07**	**1:19**	**1:35**
1:25	**1:30**	**1:37**	**1:49**	**2:05**
1:55	**2:00**	**2:07**	**2:19**	**2:35**
2:25	**2:30**	**2:37**	**2:49**	**3:05**
2:55	**3:00**	**3:07**	**3:19**	**3:35**
3:25	**3:30**	**3:37**	**3:49**	**4:05**
3:55	**4:00**	**4:07**	**4:19**	**4:35**
4:25	**4:30**	**4:37**	**4:49**	**5:05**
4:55	**5:00**	**5:07**	**5:19**	**5:35**
5:25	**5:30**	**5:37**	**5:49**	**6:05**
5:54	**5:59**	**6:06**	**6:18**	**6:34**
6:25	**6:30**	**6:37**	**6:47**	**7:03**
7:45	**7:50**	**7:56**	**8:05**	**8:20**
—	—	**9:01**	**9:09**	**9:24**

Route 928 – Saturday / *sábado*

Fashion Valley ➡ Stonecrest

Ⓐ Fashion Valley T.C. **DEPART**	Ⓓ Sandrock & Murray Ridge	Ⓔ Stonecrest Plaza	Ⓗ Ruffin Rd. & Balboa Av.	Ⓘ Kearny Mesa T.C. **ARRIVE**
7:05a	7:17a	7:27a	—	—
8:05	8:17	8:27	—	—
9:05	9:17	9:27	—	—
10:05	10:17	10:27	—	—
11:05	11:17	11:27	—	—
12:04p	**12:18p**	**12:28p**	—	—
1:04	**1:18**	**1:28**	—	—
2:04	**2:18**	**2:28**	—	—
3:04	**3:18**	**3:28**	—	—
4:04	**4:18**	**4:28**	—	—
5:04	**5:18**	**5:28**	—	—
6:05	**6:19**	**6:29**	—	—
7:05	**7:18**	**7:28**	—	—
8:05	**8:18**	**8:28**	—	—
9:05	**9:17**	**9:27**	—	—

Stonecrest ➡ Fashion Valley

Ⓘ Kearny Mesa T.C. **DEPART**	Ⓗ Ruffin Rd. & Balboa Av.	Ⓔ Stonecrest Plaza	Ⓓ Sandrock & Murray Ridge	Ⓐ Fashion Valley T.C. **ARRIVE**
—	—	6:30a	6:39a	6:54a
—	—	7:30	7:39	7:54
—	—	8:30	8:39	8:54
—	—	9:30	9:39	9:54
—	—	10:29	10:39	10:55
—	—	11:29	11:39	11:55
—	—	**12:30p**	**12:40p**	**12:56p**
—	—	**1:30**	**1:40**	**1:56**
—	—	**2:30**	**2:40**	**2:56**
—	—	**3:30**	**3:40**	**3:56**
—	—	**4:30**	**4:40**	**4:56**
—	—	**5:30**	**5:40**	**5:56**

Route 928 – Sunday / *domingo*

Fashion Valley ➡ Stonecrest

Ⓐ Fashion Valley T.C. **DEPART**	Ⓓ Sandrock & Murray Ridge	Ⓔ Stonecrest Plaza	Ⓗ Ruffin Rd. & Balboa Av.	Ⓘ Kearny Mesa T.C. **ARRIVE**
9:05a	9:17a	9:27a	—	—
10:05	10:17	10:27	—	—
11:05	11:17	11:27	—	—
12:04p	**12:18p**	**12:28p**	—	—
1:04	**1:18**	**1:28**	—	—
2:04	**2:18**	**2:28**	—	—
3:04	**3:18**	**3:28**	—	—
4:04	**4:18**	**4:28**	—	—
5:04	**5:18**	**5:28**	—	—
6:05	**6:19**	**6:29**	—	—

Stonecrest ➡ Fashion Valley

Ⓘ Kearny Mesa T.C. **DEPART**	Ⓗ Ruffin Rd. & Balboa Av.	Ⓔ Stonecrest Plaza	Ⓓ Sandrock & Murray Ridge	Ⓐ Fashion Valley T.C. **ARRIVE**
—	—	8:30a	8:39a	8:54a
—	—	9:30	9:39	9:54
—	—	10:29	10:39	10:55
—	—	11:29	11:39	11:55
—	—	**12:30p**	**12:40p**	**12:56p**
—	—	**1:30**	**1:40**	**1:56**
—	—	**2:30**	**2:40**	**2:56**
—	—	**3:30**	**3:40**	**3:56**
—	—	**4:30**	**4:40**	**4:56**
—	—	**5:30**	**5:40**	**5:56**

A Saturday or Sunday schedule will be operated on the following holidays and observed holidays

Se operará con horario de sábado o domingo durante los siguientes días festivos y feriados observados

>>> New Year's Day, Presidents' Day, Memorial Day, Independence Day, Labor Day, Thanksgiving, Christmas

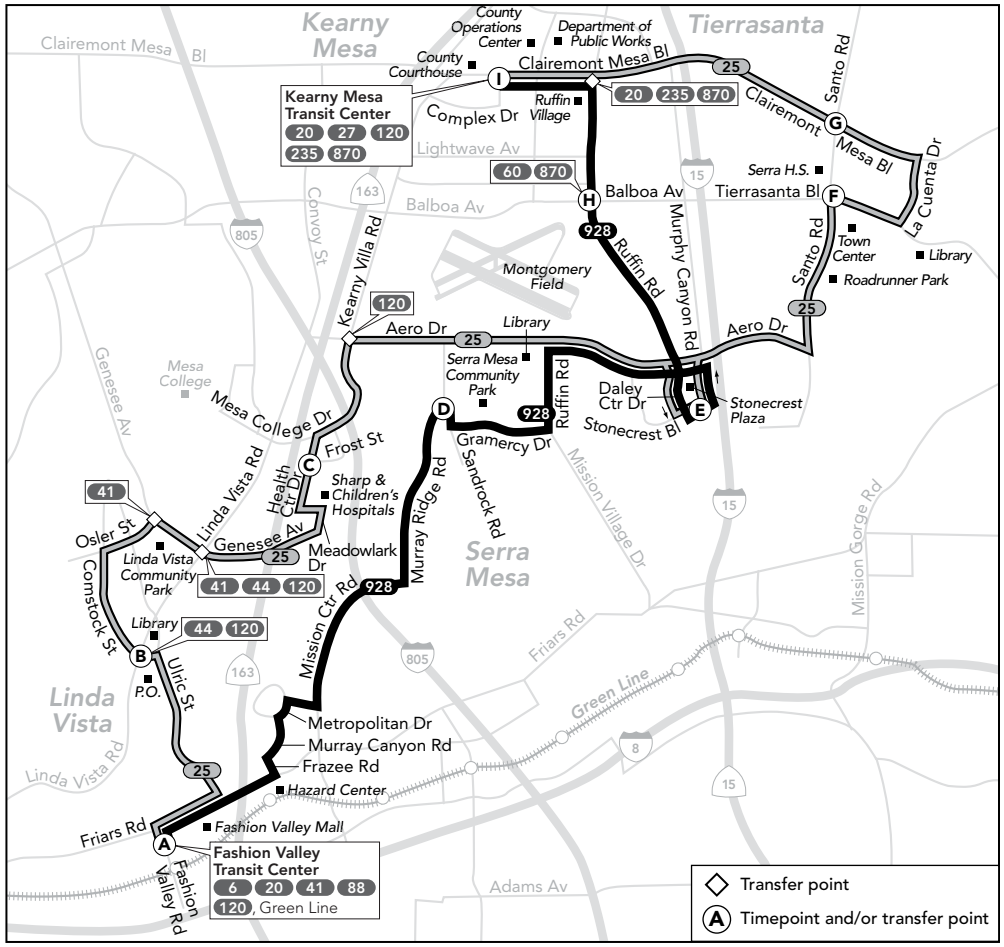

Effective OCTOBER 12, 2014

41

Fashion Valley – UCSD / VA Medical Ctr.

via Genesee Av.

CASH FARES / *Tarifas en efectivo*

Exact fare, please / *Favor de pagar la cantidad exacta*

Day Pass (Regional) / *Pase diario (Regional)* Compass Card required ($2) / *Se requiere un Compass Card ($2)*	**$5.00**
One-Way Fare / *Tarifa de una direccíon*	**$2.25**
Senior (60+)/Disabled/Medicare *Mayores de 60 años/Discapacitados/Medicare*	**$1.10***
Children 5 & under / *Niños de 5 años o menos* Up to two children ride free per paying adult / *Máximo dos niños viajan gratis por cada adulto*	**FREE / *GRATIS***

MONTHLY PASSES / *Pases mensual*

Adult / *Adulto*	**$72.00**
Senior (60+)/Disabled/Medicare *Mayores de 60 años/Discapacitados/Medicare*	**$18.00***
Youths (18 and under) *Jóvenes (18 años o menos)*	**$36.00***

*I.D. required for discount fare or pass.
**Se requiere identificación para tarifas o pases de descuento.*

DAY PASS (REGIONAL) / *Pase diario (Regional)*

All passes are sold on Compass Card, which can be reloaded and reused for up to five years. Compass Cards are available for $2 at select outlets. A $5 Day Pass requires a Compass Card. A paper Day Pass can be purchased on board buses for an additional $2 fee.

Todos los pases se venden en el Compass Card, el cual puede ser recargado y reutilizado por hasta cinco años. Compass Cards están disponibles por $2 en selectas sucursales. Un pase de un día por $5 requiere un Compass Card. Un pase de un día de papel se puede obtener a bordo los autobuses por un costo adicional de $2.

DIRECTORY / *Directorio*

Regional Transit Information *Información de transporte público regional*	**511** or/ó **(619) 233-3004**
TTY/TDD (teletype for hearing impaired) *Teletipo para sordos*	**(619) 234-5005** or/ó **(888) 722-4889**
InfoExpress (24-hour info via Touch-Tone phone) *Información las 24 horas (via teléfono de teclas)*	**(619) 685-4900**
Customer Service / Suggestions *Servicio al cliente / Sugerencias*	**(619) 557-4555**
SafeWatch	**(619) 557-4500**
The Transit Store / Lost & Found *The Transit Store / Objetos extraviados*	**(619) 234-1060**
Articles found on the bus are turned in at The Transit Store *Artículos encontrados en los autobuses son entregados a The Transit Store*	1st & Broadway Downtown San Diego M–F 9am–5pm
For MTS online trip planning *Planificación de viajes por Internet*	**www.sdmts.com**

For more information on riding MTS services, pick up a Rider's Guide on a bus or at The Transit Store, or visit **www.sdmts.com**.

*Para obtener más información sobre el uso de los servicios de MTS, recoja un 'Rider's Guide' en un autobús o en The Transit Store, o visita a **www.sdmts.com**.*

Thank you for riding MTS! ***¡Gracias por viajar con MTS!***

DESTINATIONS

- Costa Verde Center
- Fashion Valley Mall
- Genesee Plaza
- Linda Vista Community Park
- Mesa College
- University City High School
- Westfield UTC

TROLLEY CONNECTIONS
Fashion Valley

MTS Metropolitan Transit System

Alternative formats available upon request. Please call: (619) 557-4555 / *Formato alternativo disponible al preguntar. Favor de llamar: (619) 557-4555*

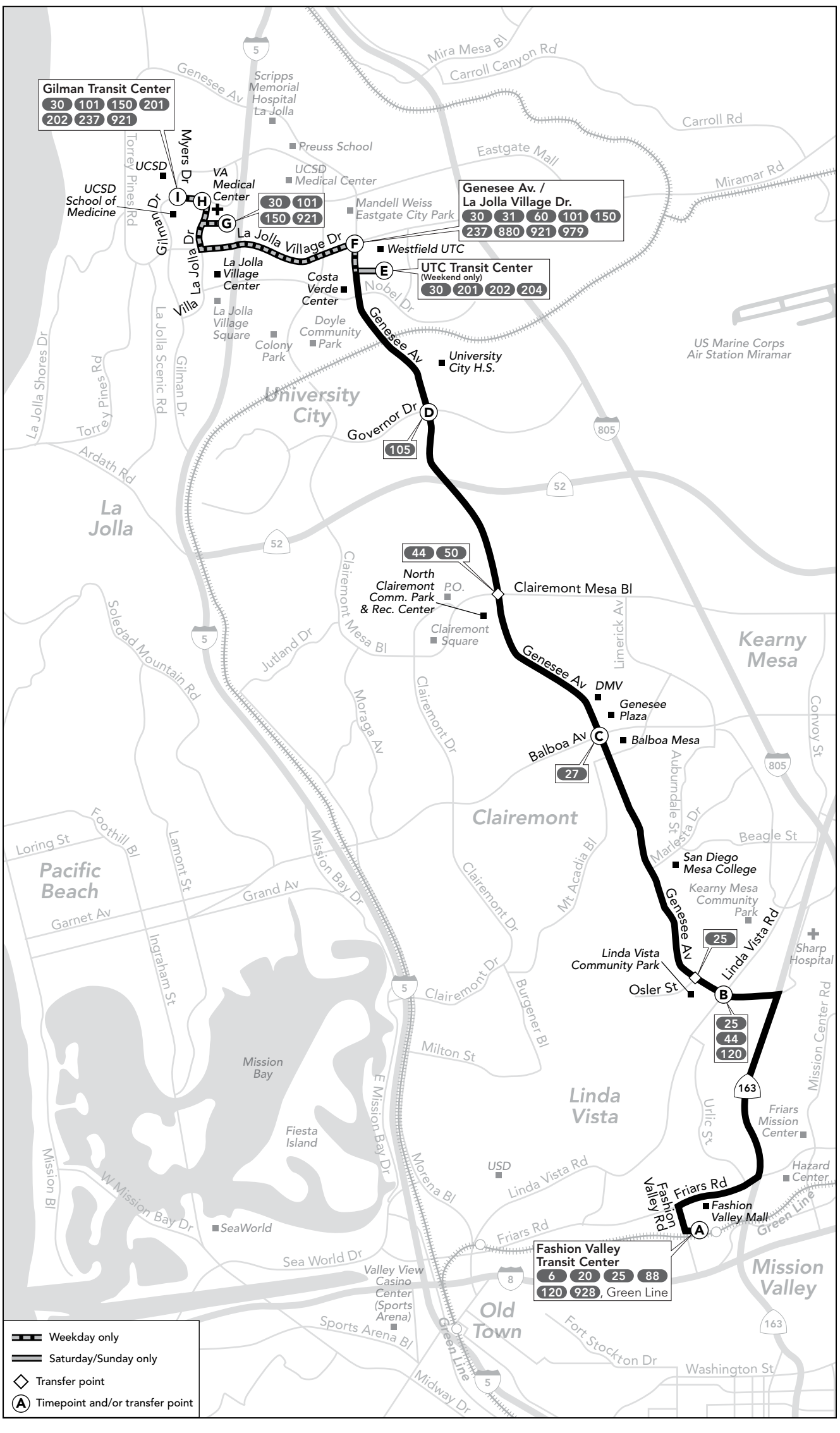

A Saturday or Sunday schedule will be operated on the following holidays and observed holidays:

Se operará con horario de sábado o domingo durante los siguientes días festivos y feriados observados:

New Year's Day, Presidents' Day, Memorial Day, Independence Day, Labor Day, Thanksgiving, Christmas

compass card
now at Albertsons

The smart card that stores your transit pass and makes riding transit easy!
Buy/reload your Compass Card at Albertsons.
Visit **www.511sd.com/compass**

MTS

The schedules and other information shown in this timetable are subject to change. MTS does not assume responsibility for errors in timetables nor for any inconvenience caused by delayed buses.
Los horarios e información que se indican en este itinerario están sujetos a cambios. MTS no asume responsabilidad por errores en los itinerarios, ni por ningún perjuicio que se origine por los autobuses demorados.

Route 41 – Monday through Friday / *lunes a viernes*

Fashion Valley ➡ Clairemont ➡ UCSD / VA Medical Center

Ⓐ Fashion Valley Transit Center **DEPART**	Ⓑ Genesee Av. & Linda Vista Rd.	Ⓒ Genesee Av. & Balboa Av.	Ⓓ Genesee Av. & Governor Dr.	Ⓕ La Jolla Village Dr. & Genesee Av.	Ⓖ V.A. Medical Center	Ⓘ Gilman Dr. & Myers Dr. **ARRIVE**
5:21a	5:30a	5:36a	5:45a	5:50a	5:56a	5:59a
5:36	5:45	5:51	6:00	6:05	6:11	6:14
5:52	6:01	6:07	6:16	6:21	6:27	6:30
6:06	6:15	6:22	6:32	6:37	6:43	6:46
6:21	6:31	6:38	6:48	6:54	7:00	7:02
—	—	**T** 6:49	7:00	7:06	7:12	7:15
6:36	6:46	6:53	7:04	7:10	7:16	7:19
—	—	**T** 7:04	7:15	7:21	7:27	7:30
6:51	7:01	7:08	7:19	7:25	7:31	7:34
—	—	**T** 7:18	7:30	7:37	7:43	7:46
7:05	7:15	7:22	7:34	7:41	7:47	7:50
—	—	**T** 7:33	7:45	7:52	7:59	8:03
7:20	7:30	7:37	7:49	7:56	8:03	8:07
—	—	**T** 7:48	8:00	8:07	8:14	8:18
7:35	7:45	7:52	8:04	8:11	8:18	8:22
—	—	**T** 8:03	8:15	8:22	8:29	8:33
7:50	8:00	8:07	8:19	8:26	8:33	8:37
—	—	**T** 8:18	8:30	8:37	8:44	8:48
8:05	8:15	8:22	8:34	8:41	8:48	8:52
—	—	**T** 8:33	8:45	8:52	8:59	9:03
8:20	8:30	8:37	8:49	8:56	9:03	9:07
—	—	**T** 8:48	9:00	9:07	9:14	9:18
8:35	8:45	8:52	9:04	9:11	9:18	9:22
—	—	**T** 9:03	9:15	9:22	9:29	9:33
8:50	9:00	9:07	9:19	9:26	9:33	9:37
—	—	**T** 9:19	9:30	9:36	9:43	9:47
9:06	9:16	9:23	9:34	9:40	9:47	9:51
—	—	**T** 9:34	9:44	9:50	9:57	10:01
9:21	9:31	9:38	9:48	9:54	10:01	10:05
9:36	9:46	9:53	10:03	10:09	10:16	10:20
9:51	10:01	10:08	10:18	10:24	10:31	10:35
AND THEN EVERY 15 MINUTES AT: / *Y LUEGO CADA 15 MINUTOS A LA:*						
:06	:16	:23	:33	:39	:46	:50
:21	:31	:38	:48	:54	:01	:05
:36	:46	:53	:03	:09	:16	:20
:51	:01	:08	:18	:24	:31	:35
UNTIL: / *HASTA:*						
2:06p	**2:16p**	**2:23p**	**2:33p**	**2:39p**	**2:46p**	**2:50p**
2:22	**2:32**	**2:39**	**2:49**	**2:55**	**3:02**	**3:06**
2:37	**2:47**	**2:55**	**3:06**	**3:12**	**3:19**	**3:23**
2:52	**3:02**	**3:10**	**3:21**	**3:27**	**3:34**	**3:38**
3:07	**3:17**	**3:25**	**3:36**	**3:42**	**3:49**	**3:53**
3:22	**3:32**	**3:40**	**3:51**	**3:57**	**4:04**	**4:08**
3:37	**3:47**	**3:55**	**4:06**	**4:12**	**4:19**	**4:23**
3:51	**4:02**	**4:10**	**4:21**	**4:28**	**4:35**	**4:40**
4:05	**4:16**	**4:24**	**4:35**	**4:42**	**4:49**	**4:54**
4:20	**4:31**	**4:39**	**4:50**	**4:57**	**5:04**	**5:09**
4:35	**4:46**	**4:54**	**5:05**	**5:12**	**5:19**	**5:24**
4:50	**5:01**	**5:09**	**5:20**	**5:27**	**5:34**	**5:39**
5:05	**5:16**	**5:24**	**5:35**	**5:42**	**5:49**	**5:54**
5:20	**5:31**	**5:39**	**5:50**	**5:57**	**6:04**	**6:09**
5:35	**5:46**	**5:54**	**6:05**	**6:12**	**6:19**	**6:24**
5:50	**6:00**	**6:08**	**6:19**	**6:25**	**6:32**	**6:37**
6:05	**6:15**	**6:23**	**6:33**	**6:39**	**6:46**	**6:50**
6:21	**6:31**	**6:39**	**6:49**	**6:55**	**7:02**	**7:06**
6:37	**6:47**	**6:54**	**7:03**	**7:09**	**7:16**	**7:20**
7:07	**7:17**	**7:24**	**7:33**	**7:39**	**7:45**	**7:48**
7:37	**7:47**	**7:54**	**8:03**	**8:09**	**8:15**	**8:18**
8:07	**8:16**	**8:22**	**8:30**	**8:35**	**8:41**	**8:44**
8:37	**8:46**	**8:52**	**9:00**	**9:05**	**9:11**	**9:14**
9:07	**9:16**	**9:22**	**9:30**	**9:35**	**9:41**	**9:44**
9:37	**9:46**	**9:52**	**10:00**	**10:05**	**10:11**	**10:14**
10:07	**10:16**	**10:22**	**10:30**	**10:35**	**10:41**	**10:44**
10:37	**10:46**	**10:52**	**11:00**	**11:05**	**11:11**	**11:14**
11:07	**11:16**	**11:22**	**11:30**	**11:35**	**11:41**	**11:44**

UCSD / VA Medical Center ➡ Clairemont ➡ Fashion Valley

Ⓗ Gilman Dr. & Villa La Jolla Dr. **DEPART**	Ⓖ V.A. Medical Center	Ⓕ Genesee Av. & La Jolla Village Dr.	Ⓓ Genesee Av. & Governor Dr.	Ⓒ Genesee Av. & Balboa Av.	Ⓑ Genesee Av. & Linda Vista Rd.	Ⓐ Fashion Valley Transit Center **ARRIVE**
5:48a	5:52a	5:58a	6:03a	6:11a	6:18a	6:25a
6:03	6:07	6:13	6:18	6:26	6:33	6:40
6:18	6:22	6:28	6:33	6:41	6:48	6:55
6:33	6:37	6:43	6:48	6:56	7:03	7:10
6:44	6:48	6:55	7:01	7:10	7:17	7:25
6:59	7:03	7:10	7:16	7:25	7:32	7:40
7:14	7:18	7:25	7:31	7:40	7:47	7:55
7:29	7:33	7:40	7:46	7:55	8:02	8:10
7:44	7:48	7:55	8:01	8:10	8:17	8:25
7:59	8:03	8:10	8:16	8:25	8:32	8:40
8:14	8:18	8:25	8:31	8:40	8:47	8:55
8:29	8:33	8:40	8:46	8:55	9:02	9:10
8:44	8:48	8:55	9:01	9:11	9:18	9:25
8:59	9:03	9:10	9:16	9:26	9:33	9:40
9:14	9:18	9:25	9:31	9:41	9:48	9:55
9:29	9:33	9:40	9:46	9:56	10:03	10:10
9:44	9:48	9:55	10:01	10:11	10:18	10:25
9:59	10:03	10:10	10:16	10:26	10:33	10:40
10:14	10:18	10:25	10:31	10:41	10:48	10:55
10:29	10:33	10:40	10:46	10:56	11:03	11:10
10:44	10:48	10:55	11:01	11:11	11:18	11:25
10:59	11:03	11:10	11:16	11:26	11:33	11:40
11:12	11:16	11:23	11:30	11:40	11:47	11:55
AND THEN EVERY 15 MINUTES AT: / *Y LUEGO CADA 15 MINUTOS A LA:*						
:27	:31	:38	:45	:55	:02	:10
:42	:46	:53	:00	:10	:17	:25
:57	:01	:08	:15	:25	:32	:40
:12	:16	:23	:30	:40	:47	:55
UNTIL: / *HASTA:*						
2:27p	**2:31p**	**2:38p**	**2:45p**	**2:55p**	**3:02p**	**3:10p**
2:42	**2:46**	**2:53**	**3:00**	**3:10**	**3:17**	**3:25**
2:54	**2:58**	**3:06**	**3:14**	**3:24**	**3:31**	**3:39**
T 3:01	**3:05**	**3:12**	**3:20**	**3:30**	—	—
3:08	**3:14**	**3:21**	**3:28**	**3:38**	**3:45**	**3:53**
T 3:15	**3:19**	**3:27**	**3:35**	**3:44**	—	—
3:21	**3:25**	**3:32**	**3:40**	**3:51**	**3:58**	**4:08**
T 3:28	**3:32**	**3:40**	**3:48**	**3:59**	—	—
3:34	**3:38**	**3:46**	**3:54**	**4:05**	**4:13**	**4:23**
T 3:41	**3:45**	**3:53**	**4:01**	**4:12**	—	—
3:49	**3:53**	**4:01**	**4:09**	**4:20**	**4:28**	**4:38**
T 3:56	**4:00**	**4:08**	**4:16**	**4:27**	—	—
4:04	**4:08**	**4:16**	**4:24**	**4:35**	**4:43**	**4:53**
T 4:11	**4:15**	**4:23**	**4:31**	**4:42**	—	—
4:19	**4:23**	**4:31**	**4:39**	**4:50**	**4:58**	**5:08**
T 4:26	**4:30**	**4:38**	**4:46**	**4:57**	—	—
4:34	**4:38**	**4:46**	**4:54**	**5:05**	**5:13**	**5:23**
T 4:41	**4:45**	**4:53**	**5:01**	**5:12**	—	—
4:49	**4:53**	**5:01**	**5:09**	**5:20**	**5:28**	**5:38**
T 4:56	**5:00**	**5:08**	**5:16**	**5:27**	—	—
5:04	**5:08**	**5:16**	**5:24**	**5:35**	**5:43**	**5:53**
T 5:11	**5:15**	**5:23**	**5:31**	**5:42**	—	—
5:19	**5:23**	**5:31**	**5:39**	**5:50**	**5:58**	**6:08**
T 5:26	**5:30**	**5:38**	**5:46**	**5:57**	—	—
5:34	**5:38**	**5:46**	**5:54**	**6:05**	**6:13**	**6:23**
5:52	**5:56**	**6:04**	**6:11**	**6:21**	**6:29**	**6:38**
6:07	**6:11**	**6:19**	**6:26**	**6:36**	**6:44**	**6:53**
6:22	**6:26**	**6:34**	**6:41**	**6:51**	**6:59**	**7:08**
6:40	**6:44**	**6:51**	**6:58**	**7:08**	**7:15**	**7:23**
6:57	**7:01**	**7:08**	**7:15**	**7:24**	**7:30**	**7:38**
7:14	**7:18**	**7:25**	**7:31**	**7:40**	**7:46**	**7:53**
7:44	**7:48**	**7:55**	**8:01**	**8:10**	**8:16**	**8:23**
8:14	**8:18**	**8:25**	**8:31**	**8:40**	**8:46**	**8:53**
8:44	**8:48**	**8:55**	**9:01**	**9:10**	**9:16**	**9:23**
9:18	**9:22**	**9:29**	**9:34**	**9:43**	**9:49**	**9:55**
9:48	**9:52**	**9:59**	**10:04**	**10:13**	**10:19**	**10:25**
10:18	**10:22**	**10:29**	**10:34**	**10:43**	**10:49**	**10:55**
10:48	**10:52**	**10:59**	**11:04**	**11:13**	**11:19**	**11:25**

T = Trip operates September through June when UCSD is in session. Trip does not operate during summer session. / *Viaje que opera de septiembre a junio en los días escolares de UCSD. Viaje no opera durante la sesión de verano.*

Route 41 – Saturday / *sábado*

Fashion Valley ➡ Clairemont ➡ UTC

Ⓐ Fashion Valley Transit Center **DEPART**	Ⓑ Genesee Av. & Linda Vista Rd.	Ⓒ Genesee Av. & Balboa Av.	Ⓓ Genesee Av. & Governor Dr.	Ⓔ UTC Transit Center **ARRIVE**	Ⓕ Ⓖ Ⓘ
6:07a	6:16a	6:22a	6:30a	6:35a	Alternate service available on Routes 30, 201, and 202 / *Servicio alterno por las rutas 30, 201, y 202*
6:37	6:46	6:52	7:00	7:05	
7:07	7:16	7:22	7:31	7:37	
7:37	7:46	7:52	8:01	8:07	
8:07	8:16	8:22	8:31	8:37	
8:37	8:46	8:52	9:01	9:07	
9:07	9:16	9:22	9:31	9:37	
9:37	9:47	9:54	10:04	10:10	
AND THEN EVERY 30 MINUTES AT: / *Y LUEGO CADA 30 MINUTOS A LA:*					
:07	:17	:24	:34	:40	
:37	:47	:54	:04	:10	
UNTIL: / *HASTA:*					
5:07p	**5:17p**	**5:24p**	**5:34p**	**5:40p**	
5:37	**5:47**	**5:54**	**6:03**	**6:09**	
6:09	**6:19**	**6:26**	**6:35**	**6:41**	
6:39	**6:49**	**6:56**	**7:05**	**7:11**	
7:09	**7:19**	**7:26**	**7:35**	**7:41**	
7:39	**7:48**	**7:54**	**8:02**	**8:07**	
8:09	**8:18**	**8:24**	**8:32**	**8:37**	
8:39	**8:48**	**8:54**	**9:02**	**9:07**	
9:09	**9:18**	**9:24**	**9:32**	**9:37**	
10:09	**10:18**	**10:24**	**10:32**	**10:37**	

UTC ➡ Clairemont ➡ Fashion Valley

Ⓗ Ⓖ Ⓕ	Ⓔ UTC Transit Center **DEPART**	Ⓓ Genesee Av. & Governor Dr.	Ⓒ Genesee Av. & Balboa Av.	Ⓑ Genesee Av. & Linda Vista Rd.	Ⓐ Fashion Valley Transit Center **ARRIVE**
Alternate service available on Routes 30, 201, and 202 / *Servicio alterno por las rutas 30, 201, y 202*	6:27a	6:32a	6:40a	6:47a	6:53a
	6:57	7:02	7:10	7:17	7:23
	7:25	7:30	7:39	7:46	7:53
	7:54	8:00	8:09	8:16	8:23
	8:24	8:30	8:39	8:46	8:53
	8:54	9:00	9:09	9:16	9:23
	9:24	9:30	9:39	9:46	9:53
	9:49	9:55	10:06	10:14	10:23
	10:20	10:26	10:37	10:45	10:54
	10:50	10:56	11:07	11:15	11:24
	11:20	11:27	11:38	11:46	11:55
	AND THEN EVERY 30 MINUTES AT: / *Y LUEGO CADA 30 MINUTOS A LA:*				
	:50	:57	:08	:16	:25
	:20	:27	:38	:46	:55
	UNTIL: / *HASTA:*				
	5:50p	**5:57p**	**6:08p**	**6:16p**	**6:25p**
	6:18	**6:25**	**6:36**	**6:44**	**6:53**
	6:54	**7:00**	**7:09**	**7:15**	**7:23**
	7:24	**7:30**	**7:39**	**7:45**	**7:53**
	7:56	**8:02**	**8:10**	**8:16**	**8:23**
	8:26	**8:32**	**8:40**	**8:46**	**8:53**
	8:56	**9:02**	**9:10**	**9:16**	**9:23**
	9:26	**9:32**	**9:40**	**9:46**	**9:53**
	9:56	**10:02**	**10:10**	**10:16**	**10:23**

Route 41 – Sunday / *domingo*

Fashion Valley ➡ Clairemont ➡ UTC

Ⓐ Fashion Valley Transit Center **DEPART**	Ⓑ Genesee Av. & Linda Vista Rd.	Ⓒ Genesee Av. & Balboa Av.	Ⓓ Genesee Av. & Governor Dr.	Ⓔ UTC Transit Center **ARRIVE**	Ⓕ Ⓖ Ⓘ
6:39a	6:48a	6:54a	7:02a	7:07a	Alternate service available on Routes 30, 201, and 202 / *Servicio alterno por las rutas 30, 201, y 202*
7:09	7:18	7:24	7:33	7:39	
7:39	7:48	7:54	8:03	8:09	
8:09	8:18	8:24	8:33	8:39	
8:39	8:48	8:54	9:03	9:09	
9:09	9:18	9:24	9:33	9:39	
9:38	9:48	9:55	10:05	10:11	
AND THEN EVERY 30 MINUTES AT: / *Y LUEGO CADA 30 MINUTOS A LA:*					
:08	:18	:25	:35	:41	
:38	:48	:55	:05	:11	
UNTIL: / *HASTA:*					
5:08p	**5:18p**	**5:25p**	**5:35p**	**5:41p**	
5:38	**5:48**	**5:55**	**6:04**	**6:10**	
6:09	**6:19**	**6:26**	**6:35**	**6:41**	
6:39	**6:49**	**6:56**	**7:05**	**7:11**	
7:09	**7:19**	**7:26**	**7:35**	**7:41**	
7:39	**7:48**	**7:54**	**8:02**	**8:07**	
8:09	**8:18**	**8:24**	**8:32**	**8:37**	
9:09	**9:18**	**9:24**	**9:32**	**9:37**	

UTC ➡ Clairemont ➡ Fashion Valley

Ⓗ Ⓖ Ⓕ	Ⓔ UTC Transit Center **DEPART**	Ⓓ Genesee Av. & Governor Dr.	Ⓒ Genesee Av. & Balboa Av.	Ⓑ Genesee Av. & Linda Vista Rd.	Ⓐ Fashion Valley Transit Center **ARRIVE**
Alternate service available on Routes 30, 201, and 202 / *Servicio alterno por las rutas 30, 201, y 202*	6:27a	6:32a	6:40a	6:47a	6:53a
	6:57	7:02	7:10	7:17	7:23
	7:25	7:30	7:39	7:46	7:53
	7:54	8:00	8:09	8:16	8:23
	8:24	8:30	8:39	8:46	8:53
	8:54	9:00	9:09	9:16	9:23
	9:24	9:30	9:39	9:46	9:53
	9:50	9:56	10:07	10:15	10:24
	10:20	10:26	10:37	10:45	10:54
	10:51	10:57	11:08	11:16	11:25
	11:20	11:27	11:38	11:46	11:55
	11:50	11:57	**12:08p**	**12:16p**	**12:25p**
	AND THEN EVERY 30 MINUTES AT: / *Y LUEGO CADA 30 MINUTOS A LA:*				
	:20	:27	**:38**	**:46**	**:55**
	:50	:57	**:08**	**:16**	**:25**
	UNTIL: / *HASTA:*				
	5:20p	**5:27p**	**5:38**	**5:46**	**5:55**
	5:49	**5:56**	**6:07**	**6:15**	**6:24**
	6:18	**6:25**	**6:36**	**6:44**	**6:53**
	6:54	**7:00**	**7:09**	**7:15**	**7:23**
	7:24	**7:30**	**7:39**	**7:45**	**7:53**
	7:56	**8:02**	**8:10**	**8:16**	**8:23**
	8:26	**8:32**	**8:40**	**8:46**	**8:53**
	9:26	**9:32**	**9:40**	**9:46**	**9:53**

CASH FARES / *Tarifas en efectivo*

Exact fare, please / *Favor de pagar la cantidad exacta*

Day Pass (Regional) / *Pase diario (Regional)* Compass Card required ($2) / *Se requiere un Compass Card ($2)*	**$5.00**
One-Way Fare / *Tarifa de una direccíon*	**$2.25**
Senior (60+)/Disabled/Medicare *Mayores de 60 años/Discapacitados/Medicare*	**$1.10***
Children 5 & under / *Niños de 5 años o menos* Up to two children ride free per paying adult / *Máximo dos niños viajan gratis por cada adulto*	**FREE** / ***GRATIS***

MONTHLY PASSES / *Pases mensual*

Adult / *Adulto*	**$72.00**
Senior (60+)/Disabled/Medicare *Mayores de 60 años/Discapacitados/Medicare*	**$18.00***
Youths (18 and under) *Jóvenes (18 años o menos)*	**$36.00***

*I.D. required for discount fare or pass.
**Se requiere identificación para tarifas o pases de descuento.*

DAY PASS (REGIONAL) / *Pase diario (Regional)*

All passes are sold on Compass Card, which can be reloaded and reused for up to five years. Compass Cards are available for $2 at select outlets. A $5 Day Pass requires a Compass Card. A paper Day Pass can be purchased on board buses for an additional $2 fee.

Todos los pases se venden en el Compass Card, el cual puede ser recargado y reutilizado por hasta cinco años. Compass Cards están disponibles por $2 en selectas sucursales. Un pase de un día por $5 requiere un Compass Card. Un pase de un día de papel se puede obtener a bordo los autobuses por un costo adicional de $2.

DIRECTORY / *Directorio*

Regional Transit Information *Información de transporte público regional*	**511** or/ó **(619) 233-3004**
TTY/TDD (teletype for hearing impaired) *Teletipo para sordos*	**(619) 234-5005** or/ó **(888) 722-4889**
InfoExpress (24-hour info via Touch-Tone phone) *Información las 24 horas (via teléfono de teclas)*	**(619) 685-4900**
Customer Service / Suggestions *Servicio al cliente / Sugerencias*	**(619) 557-4555**
SafeWatch	**(619) 557-4500**
Lost & Found *Objetos extraviados*	Route 25: **(877) 841-3278** or/ó Route 928: **(619) 427-5660** **(800) 409-3310**
The Transit Store	**(619) 234-1060** 1st & Broadway, Downtown San Diego M–F 9am–5pm
For MTS online trip planning *Planificación de viajes por Internet*	**www.sdmts.com**

For more information on riding MTS services, pick up a Rider's Guide on a bus or at The Transit Store, or visit **www.sdmts.com**.

*Para obtener más información sobre el uso de los servicios de MTS, recoja un 'Rider's Guide' en un autobús o en The Transit Store, o visita a **www.sdmts.com**.*

Thank you for riding MTS! ***¡Gracias por viajar con MTS!***

Effective JUNE 8, 2014

25 — Fashion Valley – Kearny Mesa
via Linda Vista / Stonecrest

928 — Fashion Valley – Kearny Mesa
via Serra Mesa / Stonecrest

DESTINATIONS

- Children's Hospital (25)
- Fashion Valley Mall
- Hazard Center (928)
- Kearny Mesa Courthouse
- Linda Vista Park & Rec Center (25)
- Serra High School (25)
- Sharp Hospital (25)
- Stonecrest Plaza

TROLLEY CONNECTIONS
Fashion Valley

MTS Metropolitan Transit System

Alternative formats available upon request. Please call: (619) 557-4555 / *Formato alternativo disponible al preguntar. Favor de llamar: (619) 557-4555*

Route 25 – Monday through Friday / *lunes a viernes*

Fashion Valley ➡ Linda Vista ➡ Tierrasanta ➡ Kearny Mesa

(A) Fashion Valley Transit Center **DEPART**	(B) Comstock St. & Linda Vista Rd.	(C) Sharp Hospital (Health Center & Frost)	(E) Stonecrest Plaza	(F) Tierrasanta Bl. & Santo Rd.	(G) Clairemont Mesa Bl. & Santo Rd.	(I) Kearny Mesa Transit Center **ARRIVE**
—	—	—	6:41a	6:47a	6:51a	6:59a
7:10a	7:17a	7:28a	7:39	7:45	7:49	7:57
8:12	8:19	8:30	8:41	8:47	8:51	8:59
9:12	9:19	9:30	9:41	9:47	9:51	9:59
10:12	10:19	10:30	10:41	10:47	10:51	10:59
11:12	11:19	11:30	11:41	11:47	11:51	11:59
12:12p	**12:19p**	**12:30p**	**12:41p**	**12:47p**	**12:51p**	**12:59p**
1:12	**1:19**	**1:31**	**1:44**	**1:51**	**1:55**	**2:03**
2:12	**2:19**	**2:31**	**2:44**	**2:51**	**2:55**	**3:03**
3:14	**3:21**	**3:33**	**3:46**	**3:53**	**3:57**	**4:05**
4:14	**4:21**	**4:33**	**4:46**	**4:53**	**4:57**	**5:05**
5:16	**5:23**	**5:35**	**5:48**	**5:55**	**5:59**	**6:07**
6:18	**6:25**	**6:37**	**6:50**	**6:57**	**7:01**	**7:09**

Kearny Mesa ➡ Tierrasanta ➡ Linda Vista ➡ Fashion Valley

(I) Kearny Mesa Transit Center• **DEPART**	(G) Clairemont Mesa Bl. & Santo Rd.	(F) Santo Rd. & Tierrasanta Bl.	(E) Stonecrest Plaza	(C) Sharp Hospital (Health Center & Frost)	(B) Comstock St. & Linda Vista Rd.	(A) Fashion Valley Transit Center **ARRIVE**
—	—	—	6:21a	6:36a	6:47a	6:54a
7:12a	7:18a	7:23a	7:32	7:47	7:58	8:05
8:12	8:18	8:23	8:32	8:47	8:58	9:05
9:12	9:18	9:23	9:32	9:47	9:58	10:05
10:10	10:16	10:21	10:30	10:45	10:56	11:03
11:10	11:16	11:21	11:30	11:45	11:56	**12:03p**
12:10p	**12:16p**	**12:21p**	**12:30p**	**12:45p**	**12:56p**	**1:03**
1:09	**1:15**	**1:20**	**1:29**	**1:45**	**1:57**	**2:05**
2:10	**2:16**	**2:21**	**2:30**	**2:46**	**2:58**	**3:06**
3:11	**3:17**	**3:22**	**3:31**	**3:47**	**3:59**	**4:07**
4:13	**4:19**	**4:24**	**4:33**	**4:49**	**5:01**	**5:09**
5:15	**5:21**	**5:26**	**5:35**	**5:51**	**6:03**	**6:11**
6:17	**6:23**	**6:28**	**6:36**	**6:50**	**7:01**	**7:08**

• = Board bus on Clairemont Mesa Bl. in front of Spice House Restaurant / *Encuentra el autobús en Clairemont Mesa Bl. en frente del restaurante Spice House*

Route 25 does not operate on weekends or on the following holidays and observed holidays:
La ruta 25 no ofrece servicio durante el fin de semana ó durante los siguientes días festivos y feriados observados: >>> New Year's Day, Presidents' Day, Memorial Day, Independence Day, Labor Day, Thanksgiving, Christmas

The schedules and other information shown in this timetable are subject to change. MTS does not assume responsibility for errors in timetables nor for any inconvenience caused by delayed buses.
Los horarios e información que se indican en este itinerario están sujetos a cambios. MTS no asume responsabilidad por errores en los itinerarios, ni por ningún perjuicio que se origine por los autobuses demorados.

Route 928 – Monday through Friday / *lunes a viernes*

Fashion Valley ➡ Kearny Mesa

Ⓐ Fashion Valley T.C. **DEPART**	Ⓓ Sandrock & Murray Ridge	Ⓔ Stonecrest Plaza	Ⓗ Ruffin Rd. & Balboa Av.	Ⓘ Kearny Mesa T.C. **ARRIVE**
5:25a	5:38a	5:48a	5:54a	6:01a
5:55	6:08	6:18	6:24	6:31
6:25	6:38	6:48	6:54	7:01
6:55	7:08	7:18	7:24	7:31
7:25	7:38	7:48	7:54	8:01
7:55	8:08	8:18	8:24	8:31
8:25	8:38	8:48	8:54	9:01
8:55	9:08	9:18	9:24	9:31
9:25	9:38	9:48	9:54	10:01
9:55	10:08	10:18	10:24	10:31
10:25	10:38	10:48	10:54	11:01
10:55	11:08	11:18	11:24	11:31
11:25	11:39	11:50	11:56	**12:04p**
11:55	**12:09p**	**12:20p**	**12:27p**	**12:35**
12:25p	**12:39**	**12:50**	**12:57**	**1:05**
12:55	**1:09**	**1:20**	**1:27**	**1:35**
1:25	**1:39**	**1:50**	**1:57**	**2:05**
1:55	**2:09**	**2:20**	**2:27**	**2:35**
2:25	**2:39**	**2:50**	**2:57**	**3:05**
2:55	**3:09**	**3:20**	**3:27**	**3:35**
3:19	**3:34**	**3:45**	**3:54**	**4:02**
3:49	**4:04**	**4:15**	**4:24**	**4:32**
4:19	**4:34**	**4:45**	**4:54**	**5:02**
4:49	**5:04**	**5:15**	**5:24**	**5:32**
5:19	**5:34**	**5:45**	**5:54**	**6:02**
5:49	**6:04**	**6:15**	**6:22**	**6:30**
6:19	**6:34**	**6:45**	**6:52**	**7:00**
6:55	**7:09**	**7:19**	—	—
7:37	**7:51**	**8:01**	**8:07**	**8:14**
8:35	**8:48**	**8:58**	—	—
9:37	**9:50**	**10:00**	—	—

Kearny Mesa ➡ Fashion Valley

Ⓘ Kearny Mesa T.C. **DEPART**	Ⓗ Ruffin Rd. & Balboa Av.	Ⓔ Stonecrest Plaza	Ⓓ Sandrock & Murray Ridge	Ⓐ Fashion Valley T.C. **ARRIVE**
—	—	4:47a	4:55a	5:10a
—	—	5:33	5:41	5:56
5:54a	5:58a	6:03	6:11	6:26
6:28	6:33	6:39	6:48	7:04
6:58	7:03	7:09	7:18	7:34
7:28	7:33	7:39	7:48	8:04
7:58	8:03	8:09	8:18	8:34
8:28	8:33	8:39	8:48	9:04
8:58	9:03	9:09	9:18	9:34
9:17	9:22	9:29	9:39	9:55
9:47	9:52	9:59	10:09	10:25
10:17	10:22	10:29	10:39	10:55
10:47	10:52	10:59	11:09	11:25
11:25	11:30	11:37	11:49	**12:05p**
11:55	**12:00p**	**12:07p**	**12:19p**	**12:35**
12:25p	**12:30**	**12:37**	**12:49**	**1:05**
12:55	**1:00**	**1:07**	**1:19**	**1:35**
1:25	**1:30**	**1:37**	**1:49**	**2:05**
1:55	**2:00**	**2:07**	**2:19**	**2:35**
2:25	**2:30**	**2:37**	**2:49**	**3:05**
2:55	**3:00**	**3:07**	**3:19**	**3:35**
3:25	**3:30**	**3:37**	**3:49**	**4:05**
3:55	**4:00**	**4:07**	**4:19**	**4:35**
4:25	**4:30**	**4:37**	**4:49**	**5:05**
4:55	**5:00**	**5:07**	**5:19**	**5:35**
5:25	**5:30**	**5:37**	**5:49**	**6:05**
5:54	**5:59**	**6:06**	**6:18**	**6:34**
6:25	**6:30**	**6:37**	**6:47**	**7:03**
7:45	**7:50**	**7:56**	**8:05**	**8:20**
—	—	**9:01**	**9:09**	**9:24**

Route 928 – Saturday / *sábado*

Fashion Valley ➡ Stonecrest

Ⓐ Fashion Valley T.C. **DEPART**	Ⓓ Sandrock & Murray Ridge	Ⓔ Stonecrest Plaza	Ⓗ Ruffin Rd. & Balboa Av.	Ⓘ Kearny Mesa T.C. **ARRIVE**
7:05a	7:17a	7:27a	—	—
8:05	8:17	8:27	—	—
9:05	9:17	9:27	—	—
10:05	10:17	10:27	—	—
11:05	11:17	11:27	—	—
12:04p	**12:18p**	**12:28p**	—	—
1:04	**1:18**	**1:28**	—	—
2:04	**2:18**	**2:28**	—	—
3:04	**3:18**	**3:28**	—	—
4:04	**4:18**	**4:28**	—	—
5:04	**5:18**	**5:28**	—	—
6:05	**6:19**	**6:29**	—	—
7:05	**7:18**	**7:28**	—	—
8:05	**8:18**	**8:28**	—	—
9:05	**9:17**	**9:27**	—	—

Stonecrest ➡ Fashion Valley

Ⓘ Kearny Mesa T.C. **DEPART**	Ⓗ Ruffin Rd. & Balboa Av.	Ⓔ Stonecrest Plaza	Ⓓ Sandrock & Murray Ridge	Ⓐ Fashion Valley T.C. **ARRIVE**
—	—	6:30a	6:39a	6:54a
—	—	7:30	7:39	7:54
—	—	8:30	8:39	8:54
—	—	9:30	9:39	9:54
—	—	10:29	10:39	10:55
—	—	11:29	11:39	11:55
—	—	**12:30p**	**12:40p**	**12:56p**
—	—	**1:30**	**1:40**	**1:56**
—	—	**2:30**	**2:40**	**2:56**
—	—	**3:30**	**3:40**	**3:56**
—	—	**4:30**	**4:40**	**4:56**
—	—	**5:30**	**5:40**	**5:56**

Route 928 – Sunday / *domingo*

Fashion Valley ➡ Stonecrest

Ⓐ Fashion Valley T.C. **DEPART**	Ⓓ Sandrock & Murray Ridge	Ⓔ Stonecrest Plaza	Ⓗ Ruffin Rd. & Balboa Av.	Ⓘ Kearny Mesa T.C. **ARRIVE**
9:05a	9:17a	9:27a	—	—
10:05	10:17	10:27	—	—
11:05	11:17	11:27	—	—
12:04p	**12:18p**	**12:28p**	—	—
1:04	**1:18**	**1:28**	—	—
2:04	**2:18**	**2:28**	—	—
3:04	**3:18**	**3:28**	—	—
4:04	**4:18**	**4:28**	—	—
5:04	**5:18**	**5:28**	—	—
6:05	**6:19**	**6:29**	—	—

Stonecrest ➡ Fashion Valley

Ⓘ Kearny Mesa T.C. **DEPART**	Ⓗ Ruffin Rd. & Balboa Av.	Ⓔ Stonecrest Plaza	Ⓓ Sandrock & Murray Ridge	Ⓐ Fashion Valley T.C. **ARRIVE**
—	—	8:30a	8:39a	8:54a
—	—	9:30	9:39	9:54
—	—	10:29	10:39	10:55
—	—	11:29	11:39	11:55
—	—	**12:30p**	**12:40p**	**12:56p**
—	—	**1:30**	**1:40**	**1:56**
—	—	**2:30**	**2:40**	**2:56**
—	—	**3:30**	**3:40**	**3:56**
—	—	**4:30**	**4:40**	**4:56**
—	—	**5:30**	**5:40**	**5:56**

A Saturday or Sunday schedule will be operated on the following holidays and observed holidays

Se operará con horario de sábado o domingo durante los siguientes días festivos y feriados observados

>>> New Year's Day, Presidents' Day, Memorial Day, Independence Day, Labor Day, Thanksgiving, Christmas

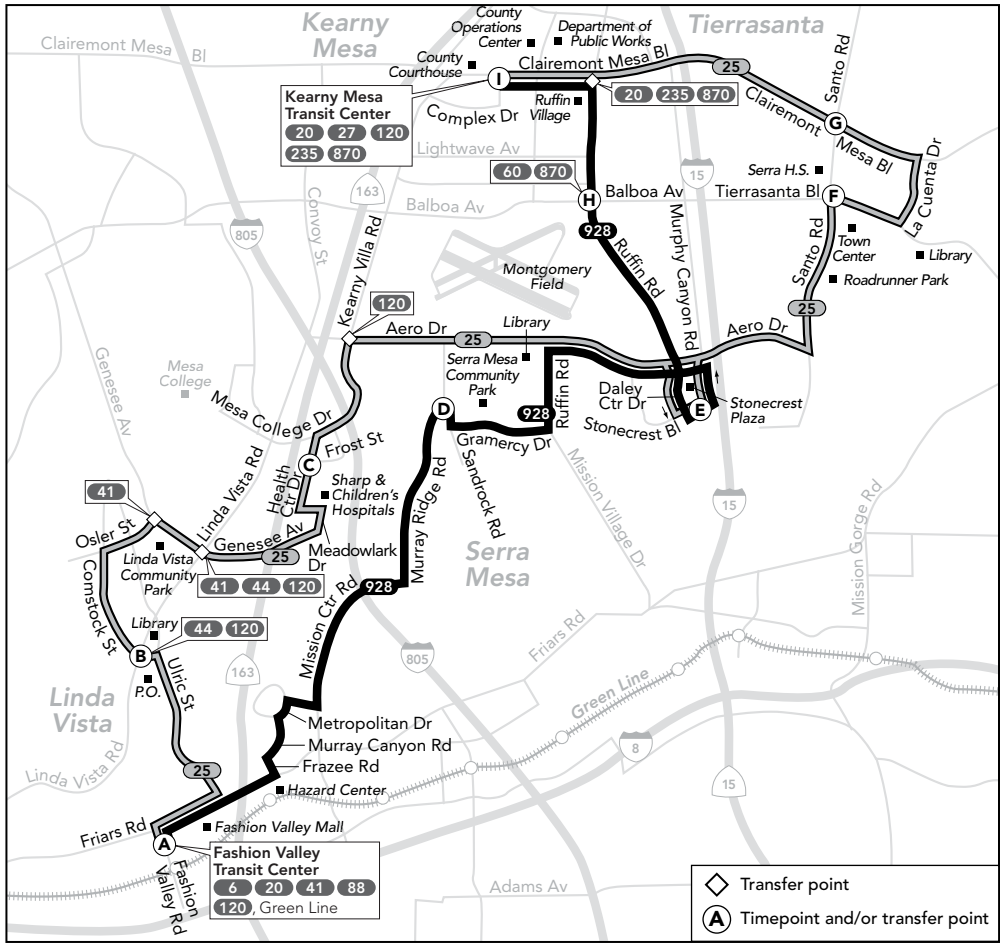

APPENDIX M

REPRESENTATIVE ACCESSIBILITY DERIVATION WORKSHEETS

		Point A							
		Without Project				With Project			
Map Location	**Hospital**	Distance (mi.)	Freeway (mi.)	Surface (mi.)	Travel Time(min.)	Distance (mi.)	Freeway (mi.)	Surface (mi.)	Travel Time(min.)
1	Sharp Mesa Vista	2.3	0.8	1.6	**3.9**	2.3	0.8	1.6	**3.9**
2	Sharp Memorial	2.2	0.8	1.5	**3.7**	2.2	0.8	1.5	**3.7**
3	Sharp Marry Birch Women's hospital	1.6	0.8	0.9	**2.5**	1.6	0.8	0.9	**2.5**
4	Children's Hospital and Health Center	1.7	0.8	1.0	**2.7**	1.7	0.8	1.0	**2.7**

		Point B							
		Without Project				With Project			
Map Location	**Hospital**	Distance (mi.)	Freeway (mi.)	Surface (mi.)	Travel Time(min.)	Distance (mi.)	Freeway (mi.)	Surface (mi.)	Travel Time(min.)
1	Sharp Mesa Vista	3.8	1.1	2.7	**6.5**	2.9	0.8	2.1	**5.0**
2	Sharp Memorial	3.7	1.1	2.6	**6.3**	3.0	0.8	2.2	**5.2**
3	Sharp Marry Birch Women's hospital	4.1	1.8	2.4	**6.5**	2.4	0.8	1.6	**4.0**
4	Children's Hospital and Health Center	4.1	1.1	3.0	**7.1**	2.5	0.8	1.7	**4.2**

Approx. freeway assumption speed (mph):	60
Approx. surface assumption speed (mph):	30
Rate of time (minutes):	60

	Without Project	**With Project**
Total Travel Time of A & B:	39.0	30.8

		Point A							
		Without Project				With Project			
Map Location	**Fire Station**	Distance (mi.)	Freeway (mi.)	Surface (mi.)	Travel Time(min.)	Distance (mi.)	Freeway (mi.)	Surface (mi.)	Travel Time(min.)
1	San Diego #23	3.2	0.8	2.5	**5.7**	3.2	0.8	2.5	**5.7**
2	San Diego Future #45	3.4	0.0	3.4	**6.8**	2.5	0.0	2.5	**5.0**
3	San Diego Temporary #45	3.6	0.0	3.6	**7.2**	2.1	0.0	2.1	**4.2**
4	San Diego Future Serra Mesa	0.4	0.0	0.4	**0.8**	0.4	0.0	0.4	**0.8**
5	San Diego Future Quarry Falls	2.2	0.0	2.2	**4.4**	0.8	0.0	0.8	**1.5**

		Point B							
		Without Project				With Project			
Map Location	**Fire Station**	Distance (mi.)	Freeway (mi.)	Surface (mi.)	Travel Time (min.)	Distance (mi.)	Freeway (mi.)	Surface (mi.)	Travel Time(min.)
1	San Diego #23	2.6	0	2.6	**5.2**	2.6	0	2.6	**5.2**
2	San Diego Future #45	1.3	0	1.3	**2.6**	1.3	0	1.3	**2.6**
3	San Diego Temporary #45	1.7	0	1.7	**3.3**	1.7	0	1.7	**3.3**
4	San Diego Future Serra Mesa	2.3	0	2.3	**4.6**	1.2	0	1.2	**2.4**
5	San Diego Future Quarry Falls	0.7	0	0.7	**1.3**	0.7	0	0.7	**1.3**

Approx. freeway assumption speed (mph):	60
Approx. surface assumption speed (mph):	30
Rate of time (minutes):	60

	Without Project	**With Project**
Total Travel Time of A & B:	41.8	31.9

		Point A							
		Without Project				With Project			
Map Location	School	Distance (mi.)	Freeway (mi.)	Surface (mi.)	Travel Time(min.)	Distance (mi.)	Freeway (mi.)	Surface (mi.)	Travel Time(min.)
1	Kearny High	2	0.8	1.3	**3.3**	2	0.8	1.3	**3.3**
2	Fletcher Elementary	2.8	0.8	2.1	**4.9**	2.8	0.8	2.1	**4.9**
3	Carson Elementary	3.6	0.0	3.6	**7.2**	3.3	0.0	3.3	**6.5**
4	Wegeforth Elementary	1.7	0.0	1.7	**3.4**	1.7	0.0	1.7	**3.4**
5	Angier Elementary	1.6	0.0	1.6	**3.2**	1.6	0.0	1.6	**3.2**
6	Jones Elementary	0.9	0.0	0.9	**1.8**	0.9	0.0	0.9	**1.8**
7	Cubberley Elementary	2.3	0.0	2.3	**4.6**	2.3	0.0	2.3	**4.6**
8	Taft Middle	2.4	0.0	2.4	**4.8**	2.4	0.0	2.4	**4.8**
9	Chesterton Elementary	3.6	1.1	2.5	**6.1**	3.1	0.8	2.3	**5.4**
10	San Diego Mesa College	2.3	0.8	1.6	**3.9**	2.3	0.8	1.6	**3.9**
11	Art Institute of California	1.7	0.0	1.7	**3.4**	1.0	0.0	1.0	**2.0**
12	National University	2.1	0.8	1.4	**3.5**	2.1	0.8	1.4	**3.5**
N/A	University of San Diego	4.8	0.0	4.8	**9.6**	4.5	0.0	4.5	**8.9**
N/A	San Diego State University	5.2	4.4	0.8	**6.0**	5.2	4.4	0.8	**6.0**

		Point B							
		Without Project				With Project			
Map Location	**School**	Distance (mi.)	Freeway (mi.)	Surface (mi.)	Travel Time(min.)	Distance (mi.)	Freeway (mi.)	Surface (mi.)	Travel Time(min.)
1	Kearny High	4.0	1.8	2.3	**6.3**	2.8	0.8	2.0	**4.8**
2	Fletcher Elementary	3.9	1.1	2.8	**6.7**	3.6	0.8	2.8	**6.4**
3	Carson Elementary	2.5	0.0	2.5	**5.0**	2.5	0.0	2.5	**5.0**
4	Wegeforth Elementary	3.2	0.0	3.2	**6.4**	2.5	0.0	2.5	**4.9**
5	Angier Elementary	3.6	0.0	3.6	**7.2**	2.4	0.0	2.4	**4.7**
6	Jones Elementary	2.8	0.0	2.8	**5.6**	1.7	0.0	1.7	**3.3**
7	Cubberley Elementary	2.6	0.0	2.6	**5.2**	2.6	0.0	2.6	**5.2**
8	Taft Middle	2.7	0.0	2.7	**5.4**	2.7	0.0	2.7	**5.4**
9	Chesterton Elementary	3.6	1.1	2.5	**6.1**	3.1	0.8	2.3	**5.4**
10	San Diego Mesa College	4.3	1.8	2.6	**6.9**	3.1	0.8	2.3	**5.4**

11	Art Institute of California	1.1	0.0	1.1	**2.2**	1.1	0.0	1.1	**2.2**
12	National University	4.3	0.0	4.3	**8.6**	2.9	0.8	2.1	**5.0**
N/A	University of San Diego	3.7	0.0	3.7	**7.4**	3.7	0.0	3.7	**7.4**
N/A	San Diego State University	4.9	1.2	3.7	**8.6**	4.9	1.2	3.7	**8.6**

Approx. freeway assumption speed (mph):	60
Approx. surface assumption speed (mph):	30
Rate of time (minutes):	60

	Without Project	**With Project**
Total Travel Time of A & B:	153.0	135.4

		Point A							
		Without Project				With Project			
Map Location	**Library**	Distance (mi.)	Freeway (mi.)	Surface (mi.)	Travel Time(min.)	Distance (mi.)	Freeway (mi.)	Surface (mi.)	Travel Time(min.)
1	**Mission Valley Library**	3.5	0.0	3.5	**7.0**	1.8	0.0	1.8	**3.5**
2	Serra Mesa Library	2.2	0.0	2.2	**4.4**	2.2	0.0	2.2	**4.4**
3	Linda Vista Library	3.3	0.8	2.6	**5.9**	3.3	0.8	2.6	**5.9**
N/A	Mission San Diego library	3.5	0.0	3.5	**7.0**	1.8	0.0	1.8	**3.5**

		Point B							
		Without Project				With Project			
Map Location	**Library**	Distance (mi.)	Freeway (mi.)	Surface (mi.)	Travel Time(min.)	Distance (mi.)	Freeway (mi.)	Surface (mi.)	Travel Time(min.)
1	Mission Valley Library	1.0	0.0	1.0	**2.0**	1.0	0.0	1.0	**2.0**
2	Serra Mesa Library	3.4	0.0	3.4	**6.8**	3.0	0.0	3.0	**5.9**
3	Linda Vista Library	2.6	0.0	2.6	**5.2**	2.6	0.0	2.6	**5.2**
4	Mission San Diego library	1.0	0.0	1.0	**2.0**	1.0	0.0	1.0	**2.0**

Approx. freeway assumption speed (mph):	60
Approx. surface assumption speed (mph):	30
Rate of time (minutes):	60

	Without Project	**With Project**
Total Travel Time of A & B:	40.3	32.4

		Point A							
		Without Project				With Project			
Map Location	**Parks**	Distance (mi.)	Freeway (mi.)	Surface (mi.)	Travel Time(min.)	Distance (mi.)	Freeway (mi.)	Surface (mi.)	Travel Time(min.)
1	Murray Ridge Park	0.5	0.0	0.5	**1.0**	0.5	0.0	0.5	**1.0**
2	Serra Mesa Park	1.8	0.0	1.8	**3.6**	1.8	0.0	1.8	**3.6**
3	Cabrillo Heights Park	1.8	0.0	1.8	**3.6**	1.8	0.0	1.8	**3.6**
4	Kearny Moto Park	2.2	0.8	1.5	**3.7**	2.2	0.8	1.5	**3.7**
5	Mission Heights Park	3.0	0.0	3.0	**6.0**	2.8	0.0	2.8	**5.5**
6	Linda Vista Community Park	2.9	0.8	2.2	**5.1**	2.9	0.8	2.2	**5.1**

		Point B							
		Without Project				With Project			
Map Location	**Parks**	Distance (mi.)	Freeway (mi.)	Surface (mi.)	Travel Time(min.)	Distance (mi.)	Freeway (mi.)	Surface (mi.)	Travel Time(min.)
1	**Murray Ridge Park**	2.5	0.0	2.5	**5.0**	1.3	0.0	1.25	**2.5**
2	Serra Mesa Park	3.1	0.0	3.1	**6.2**	2.6	0.0	2.55	**5.1**
3	Cabrillo Heights Park	3.7	0.0	3.7	**7.4**	2.6	0.0	2.55	**5.1**
4	Kearny Moto Park	4.2	1.8	2.5	**6.7**	3.0	0.8	2.2	**5.2**
5	Mission Heights Park	2.0	0.0	2.0	**4.0**	2.0	0.0	2	**4.0**
6	Linda Vista Community Park	3.3	1.1	2.2	**5.5**	3.3	1.1	2.2	**5.5**

Approx. freeway assumption speed (mph):	60
Approx. surface assumption speed (mph):	30
Rate of time (minutes):	60

	Without Project	**With Project**
Total Travel Time of A & B:	57.7	49.8

		Point A							
		Without Project				With Project			
Map Location	**Shopping**	Distance (mi.)	Freeway (mi.)	Surface (mi.)	Travel Time(min.)	Distance (mi.)	Freeway (mi.)	Surface (mi.)	Travel Time(min.)
1	Fenton Market Place	3.4	0.0	3.4	**6.8**	1.65	0.0	1.7	**3.3**
2	Fashion Valley Center	2.7	0.0	2.7	**5.4**	2.4	0.0	2.4	**4.7**
3	Mission Valley Center	2.7	0.0	2.7	**5.4**	2.35	0.0	2.4	**4.7**
4	Hazard Center	2.3	0.0	2.3	**4.6**	1.5	0.0	1.5	**3.0**
5	Rio Vista Shopping Center	2.9	0.0	2.9	**5.8**	1.05	0.0	1.1	**2.1**
6	Stonecrest Plaza	3.6	0.0	3.6	**7.2**	3.6	0.0	3.6	**7.2**
7	Linda Vista Plaza	3.1	0.8	2.4	**5.5**	3.1	0.8	2.4	**5.5**
8	Friars Mission Center	1.7	0.0	1.7	**3.4**	1	0.0	1.0	**2.0**

		Point B							
		Without Project				With Project			
Map Location	**Shopping**	Distance (mi.)	Freeway (mi.)	Surface (mi.)	Travel Time(min.)	Distance (mi.)	Freeway (mi.)	Surface (mi.)	Travel Time(min.)
1	Fenton Market Place	0.9	0.0	0.9	**1.8**	0.9	0.0	0.9	**1.8**
2	Fashion Valley Center	1.6	0.0	1.6	**3.2**	1.6	0.0	1.6	**3.2**
3	Mission Valley Center	1.6	0.0	1.6	**3.2**	1.6	0.0	1.6	**3.2**
4	Hazard Center	1.2	0.0	1.2	**2.4**	1.2	0.0	1.2	**2.4**
5	Rio Vista Shopping Center	0.3	0.0	0.3	**0.6**	0.3	0.0	0.3	**0.6**
6	Stonecrest Plaza	3.1	0.0	3.1	**6.2**	3.1	0.0	3.1	**6.2**
7	Linda Vista Plaza	2.8	0.0	2.8	**5.6**	2.8	0.0	2.8	**5.6**
8	Friars Mission Center	1.0	0.0	1.0	**2.0**	1.0	0.0	1.0	**2.0**

Approx. freeway assumption speed (mph):	60
Approx. surface assumption speed (mph):	30
Rate of time (minutes):	60

	Without Project	**With Project**
Total Travel Time of A & B:	69.1	57.5

Facility Type	Time Traveled (min.)		
	Without Connection	**With Connection**	**Total Time Saved (Δt)**
Hospitals	38.95	31	**8.15**
Fire Departments	41.83	32	**9.9**
Schools	153	135	**17.56**
Libraries	40.25	32	**7.9**
Shopping Centers	69.05	57.45	**11.6**
Parks	57.65	49.75	**7.9**

Facility Type	Time Traveled (min.)	
	Without Connection	**With Connection**
Hospitals	39	31
Fire Departments	42	32
Schools	153	135
Libraries	40	32
Shopping Centers	69	57
Parks	58	50

APPENDIX N

CALTRANS ILV CALCULATIONS

ILV Calculation

Intersection: I-805 SB Ramps & Phyllis Place

Peak Hour: Existing AM

Geometry Diagram

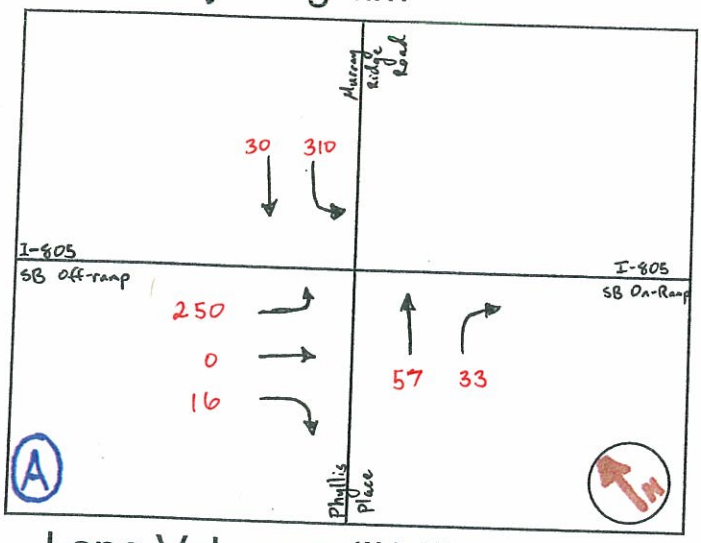

Traffic Flows

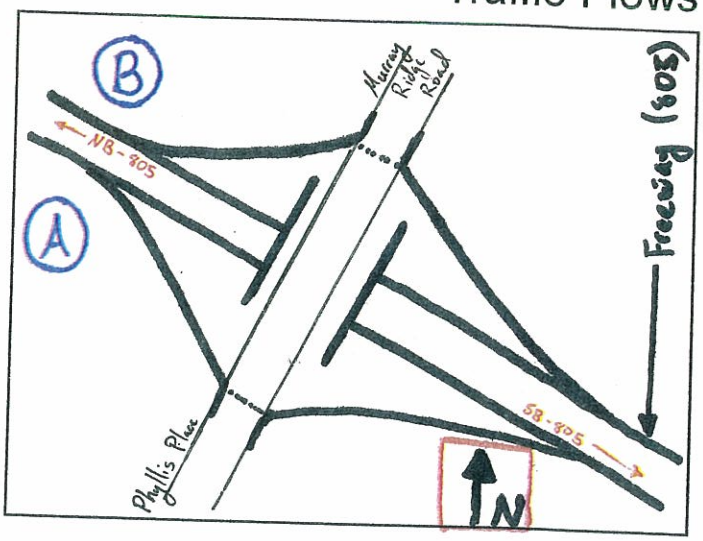

Lane Volumes (ILV/Hr)

Phase 1	Phase 2	Phase 3	~~Phase 4~~	~~Phase 5~~
30 90	250 16	310		

Critical Lane Volumes (ILV/Hr)

Phase 1	Phase 2	Phase 3	~~Phase 4~~	~~Phase 5~~
90	250	310		

Total Operating Level (ILV/hr):

Σ
650

Is...

- [x] < 1200 ILV/hr
- [ ] > 1200 ILV/hr but < 1500 ILV/hr
- [ ] > 1500 ILV/hr (CAPACITY)

Remarks: Stable

ILV Calculation

Intersection: I-805 NB Ramps & Murray Ridge Road

Peak Hour: Existing AM

Geometry Diagram

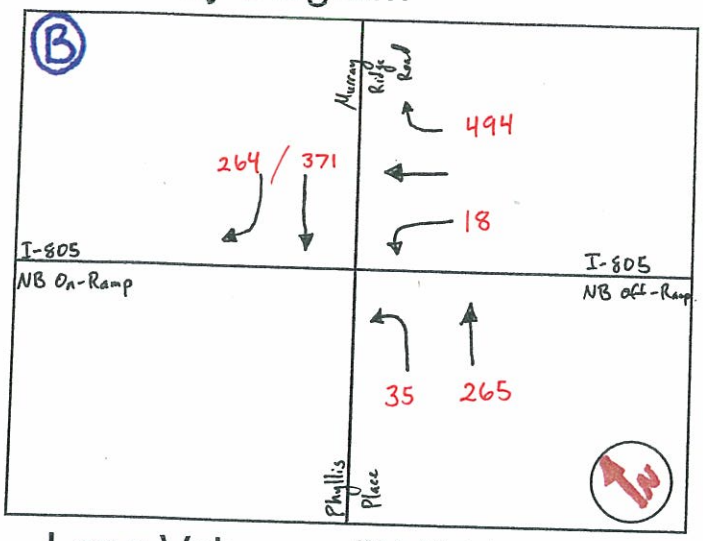

Traffic Flows

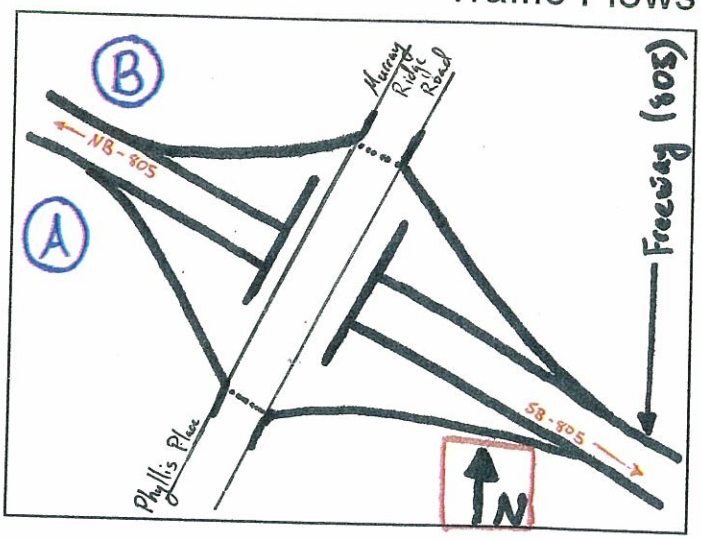

Lane Volumes (ILV/Hr)

Phase 1	Phase 2	Phase 3	~~Phase 4~~	~~Phase 5~~
317 318 265	494 18	35		

Critical Lane Volumes (ILV/Hr)

Phase 1	Phase 2	Phase 3	~~Phase 4~~	~~Phase 5~~
318	494	35		

Total Operating Level (ILV/hr):

Σ
847

Is...

- [x] < 1200 ILV/hr
- [ ] > 1200 ILV/hr but < 1500 ILV/hr
- [ ] > 1500 ILV/hr (CAPACITY)

Remarks: Stable

ILV Calculation

Intersection: I-805 SB Ramps & Phyllis Place

Peak Hour: Existing PM

Geometry Diagram

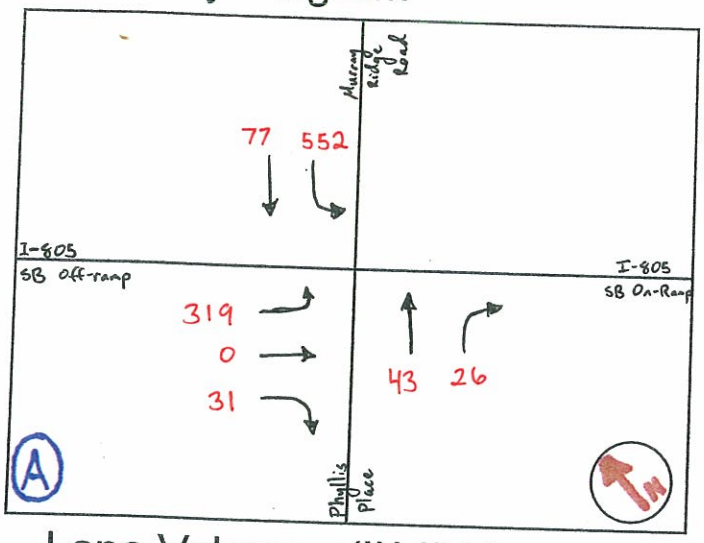

Traffic Flows

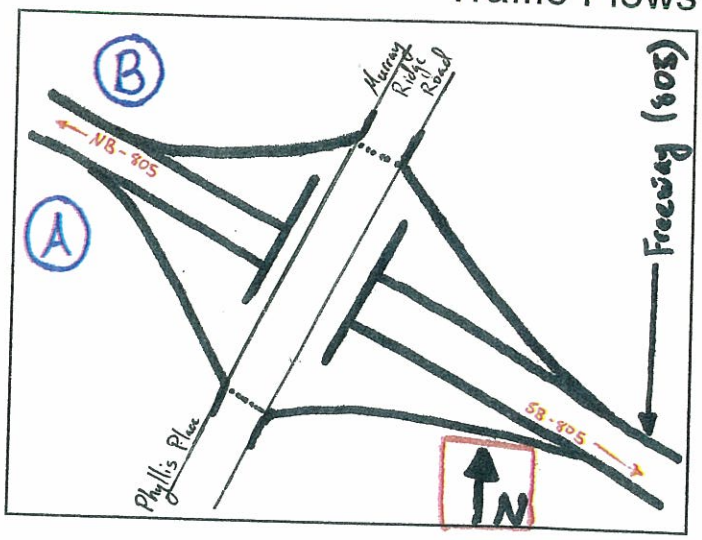

Lane Volumes (ILV/Hr)

Phase 1	Phase 2	Phase 3	~~Phase 4~~	~~Phase 5~~
77 69	319 31	552		

Critical Lane Volumes (ILV/Hr)

Phase 1	Phase 2	Phase 3	~~Phase 4~~	~~Phase 5~~
77	319	552		

Total Operating Level (ILV/hr):

Σ
948

Is...

- [x] < 1200 ILV/hr
- [ ] > 1200 ILV/hr but < 1500 ILV/hr
- [ ] > 1500 ILV/hr (CAPACITY)

Remarks: Stable

ILV Calculation

Intersection: I-805 NB Ramps & Murray Ridge Road

Peak Hour: Existing PM

Geometry Diagram

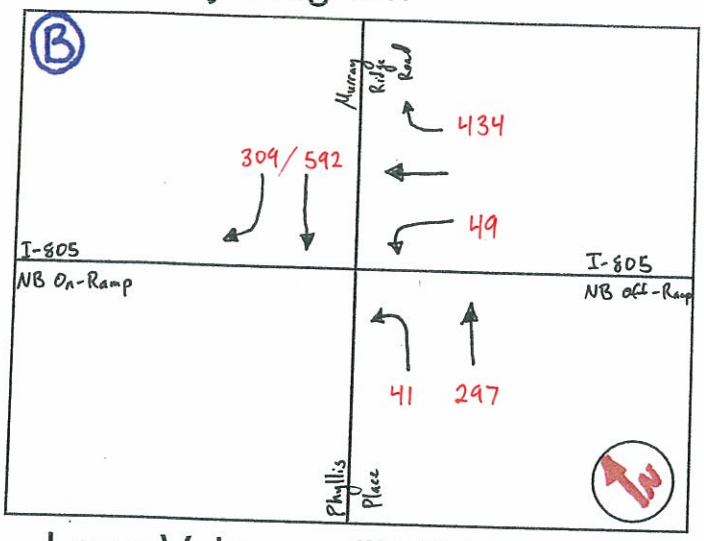

Traffic Flows

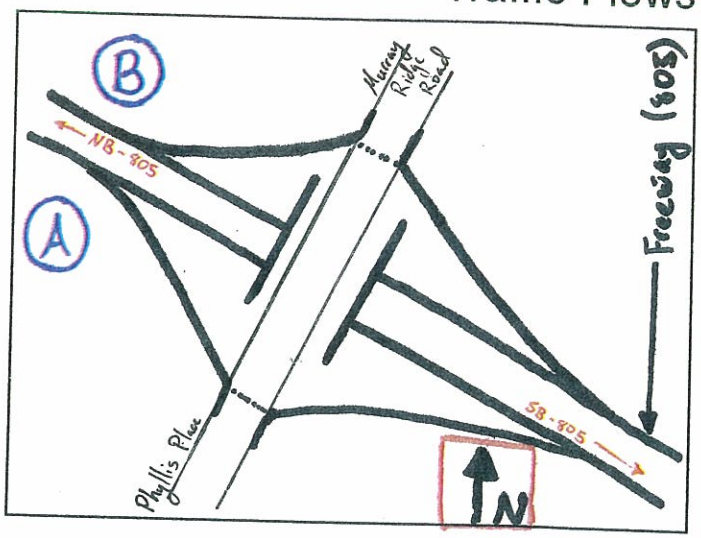

Lane Volumes (ILV/Hr)

Phase 1	Phase 2	Phase 3	~~Phase 4~~	~~Phase 5~~
450 451 297	434 49	41		

Critical Lane Volumes (ILV/Hr)

Phase 1	Phase 2	Phase 3	~~Phase 4~~	~~Phase 5~~
451	434	41		

Total Operating Level (ILV/hr):

E
926

Is...

- [x] < 1200 ILV/hr
- [ ] > 1200 ILV/hr but < 1500 ILV/hr
- [ ] > 1500 ILV/hr (CAPACITY)

Remarks: Stable

ILV Calculation

Intersection: I-805 SB Ramps & Phyllis Place

Peak Hour: 2017 w/o connection AM

Geometry Diagram

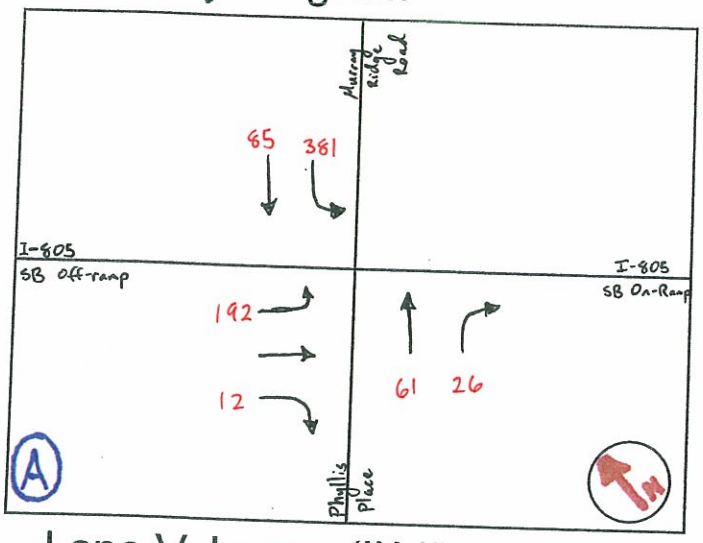

Traffic Flows

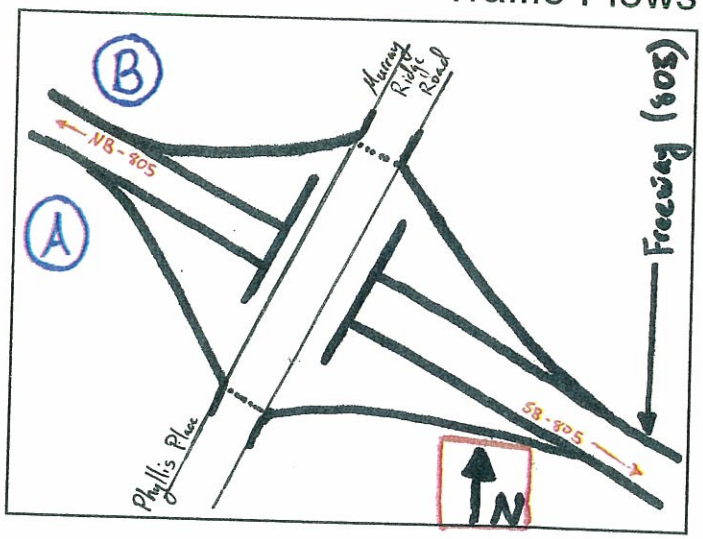

Lane Volumes (ILV/Hr)

Phase 1	Phase 2	Phase 3	~~Phase 4~~	~~Phase 5~~
65 87	192 12	381		

Critical Lane Volumes (ILV/Hr)

Phase 1	Phase 2	Phase 3	~~Phase 4~~	~~Phase 5~~
87	192	381		

Total Operating Level (ILV/hr):

Σ
660

Is...

- [x] < 1200 ILV/hr
- [ ] > 1200 ILV/hr but < 1500 ILV/hr
- [ ] > 1500 ILV/hr (CAPACITY)

Remarks: Stable

ILV Calculation

Intersection: I-805 NB Ramps & Murray Ridge Road

Peak Hour: 2017 w/o Project AM

Geometry Diagram

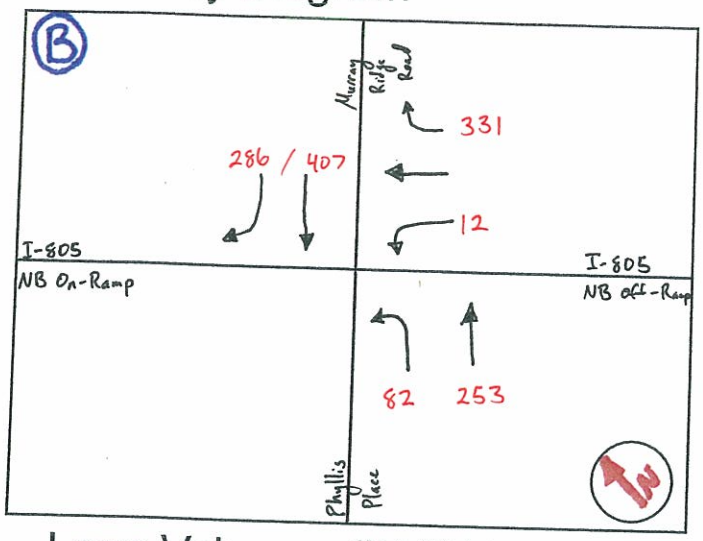

Traffic Flows

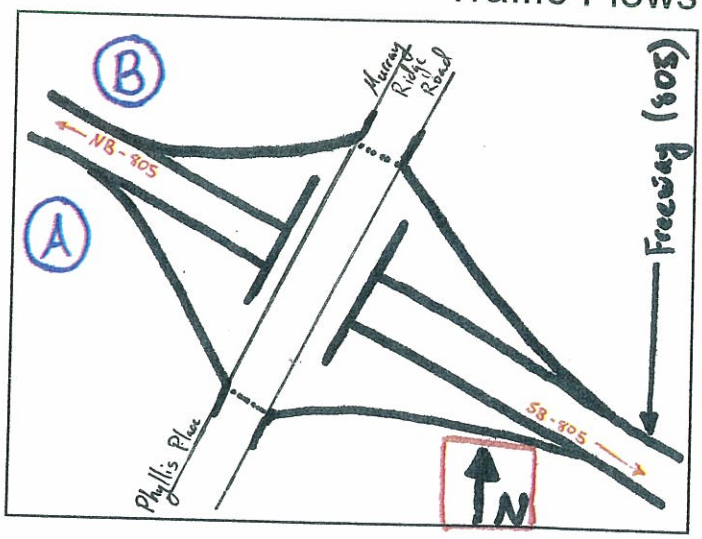

Lane Volumes (ILV/Hr)

Phase 1	Phase 2	Phase 3	~~Phase 4~~	~~Phase 5~~
346 347 253	331 12	82		

Critical Lane Volumes (ILV/Hr)

Phase 1	Phase 2	Phase 3	~~Phase 4~~	~~Phase 5~~
347	331	82		

Total Operating Level (ILV/hr):

Σ
760

Is...

- [x] < 1200 ILV/hr
- [ ] > 1200 ILV/hr but < 1500 ILV/hr
- [ ] > 1500 ILV/hr (CAPACITY)

Remarks: Stable

ILV Calculation

Intersection: I-805 SB Ramps & Phyllis Place

Peak Hour: 2017 w/o Project PM

Geometry Diagram

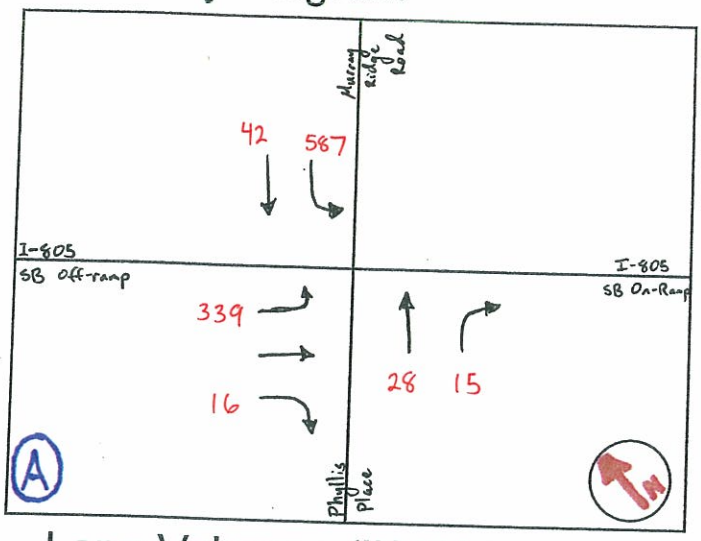

Traffic Flows

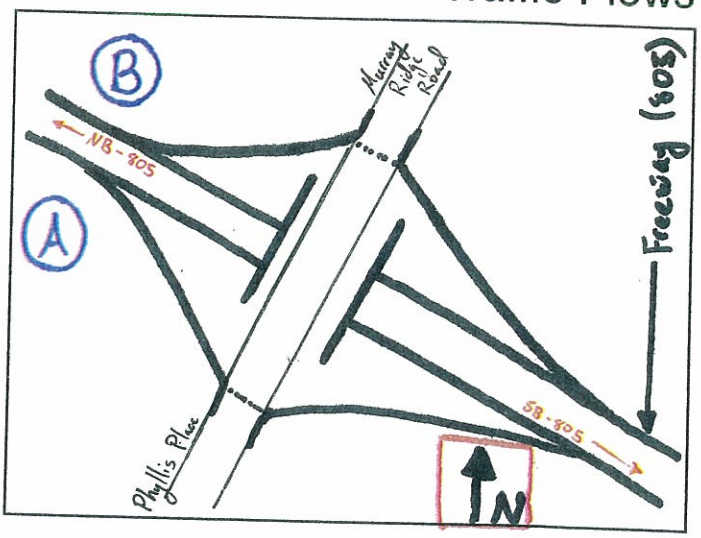

Lane Volumes (ILV/Hr)

Phase 1	Phase 2	Phase 3	~~Phase 4~~	~~Phase 5~~
42 43	339 16	587		

Critical Lane Volumes (ILV/Hr)

Phase 1	Phase 2	Phase 3	~~Phase 4~~	~~Phase 5~~
43	339	587		

Total Operating Level (ILV/hr):

Σ
969

Is...

- [x] < 1200 ILV/hr
- [ ] > 1200 ILV/hr but < 1500 ILV/hr
- [ ] > 1500 ILV/hr (CAPACITY)

Remarks: Stable

ILV Calculation

Intersection: I-805 NB Ramps : Murray Ridge Road

Peak Hour: 2017 w/o Project PM

Geometry Diagram

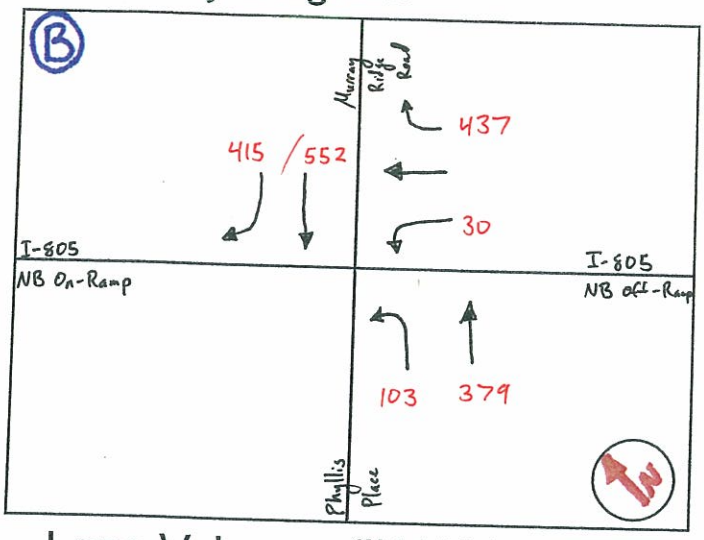

Traffic Flows

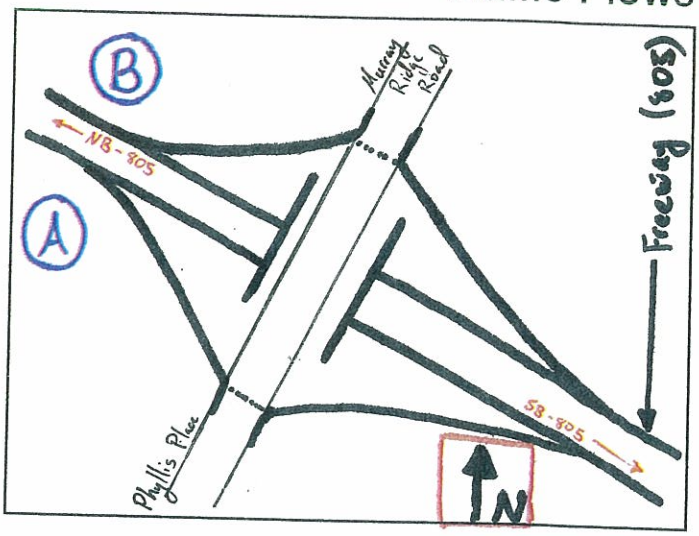

Lane Volumes (ILV/Hr)

Phase 1	Phase 2	Phase 3	~~Phase 4~~	~~Phase 5~~
483 484 379	437 30	103		

Critical Lane Volumes (ILV/Hr)

Phase 1	Phase 2	Phase 3	~~Phase 4~~	~~Phase 5~~
484	437	103		

Total Operating Level (ILV/hr):

Σ
1024

Is...

- [x] < 1200 ILV/hr
- [ ] > 1200 ILV/hr but < 1500 ILV/hr
- [ ] > 1500 ILV/hr (CAPACITY)

Remarks: Stable

ILV Calculation

Intersection: I-805 SB Ramps & Phyllis Place

Peak Hour: 2017 w/ Project AM

Geometry Diagram

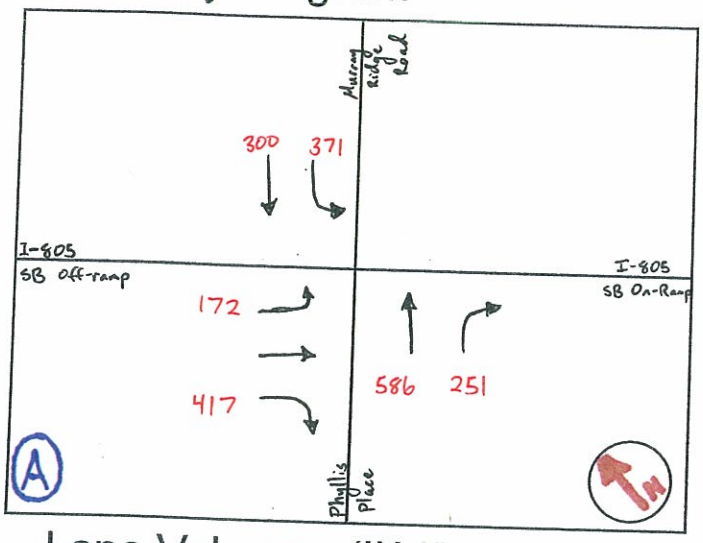

Traffic Flows

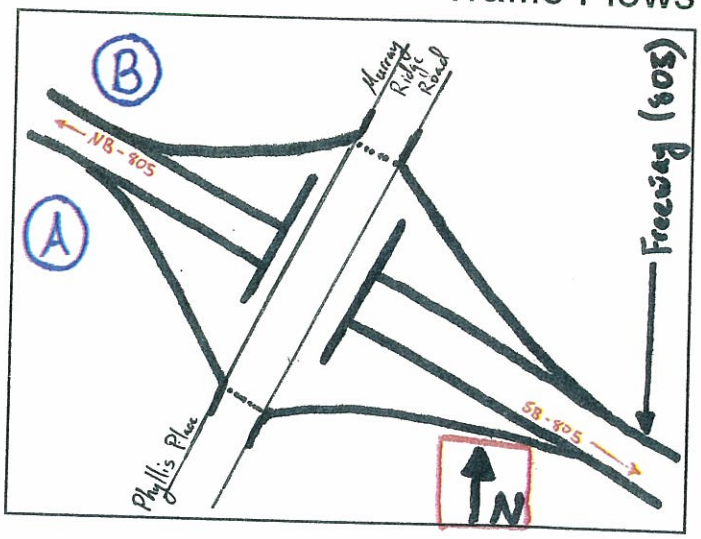

Lane Volumes (ILV/Hr)

Phase 1	Phase 2	Phase 3	~~Phase 4~~	~~Phase 5~~
300 837	172 417	371		

Critical Lane Volumes (ILV/Hr)

Phase 1	Phase 2	Phase 3	~~Phase 4~~	~~Phase 5~~
837	417	371		

Total Operating Level (ILV/hr):

Σ
1625

Is...

- ☐ < 1200 ILV/hr
- ☐ > 1200 ILV/hr but < 1500 ILV/hr
- ☒ > 1500 ILV/hr (CAPACITY)

Remarks: Stop-and-Go

ILV Calculation

Intersection: I-805 NB Ramps & Murray Ridge Road

Peak Hour: 2017 w/Project AM

Geometry Diagram

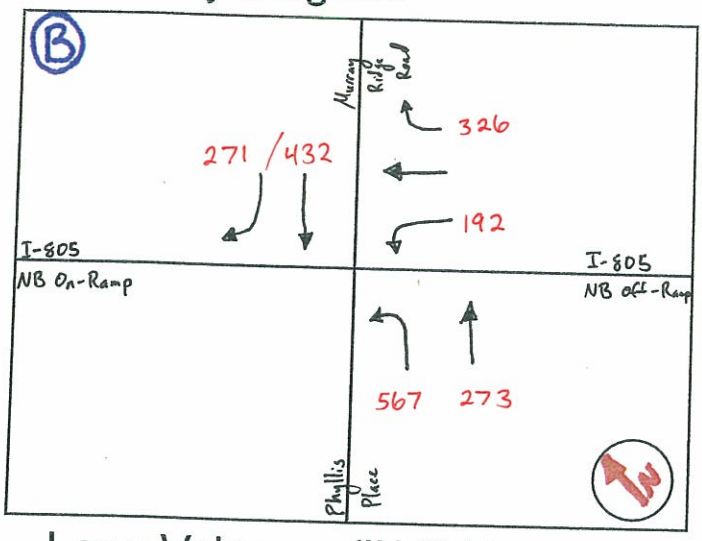

Traffic Flows

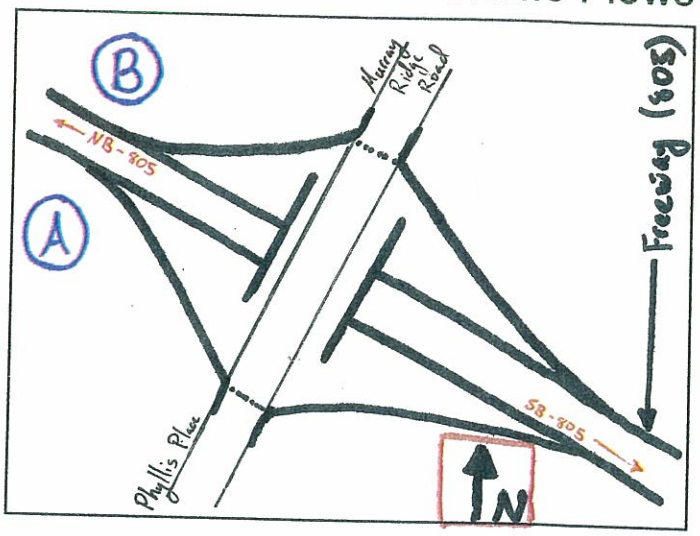

Lane Volumes (ILV/Hr)

Phase 1	Phase 2	Phase 3	~~Phase 4~~	~~Phase 5~~
351 352 273	326 192	567		

Critical Lane Volumes (ILV/Hr)

Phase 1	Phase 2	Phase 3	~~Phase 4~~	~~Phase 5~~
352	326	567		

Total Operating Level (ILV/hr):

Σ
1245

Is...

- ☐ < 1200 ILV/hr
- ☒ > 1200 ILV/hr but < 1500 ILV/hr
- ☐ > 1500 ILV/hr (CAPACITY)

Remarks: Unstable

ILV Calculation

Intersection: I-805 SB Ramps & Phyllis Place

Peak Hour: 2017 w/Project PM

Geometry Diagram

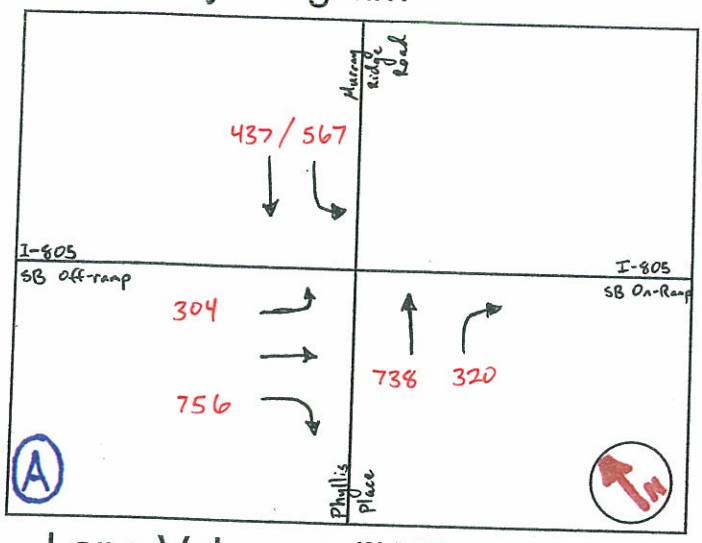

Traffic Flows

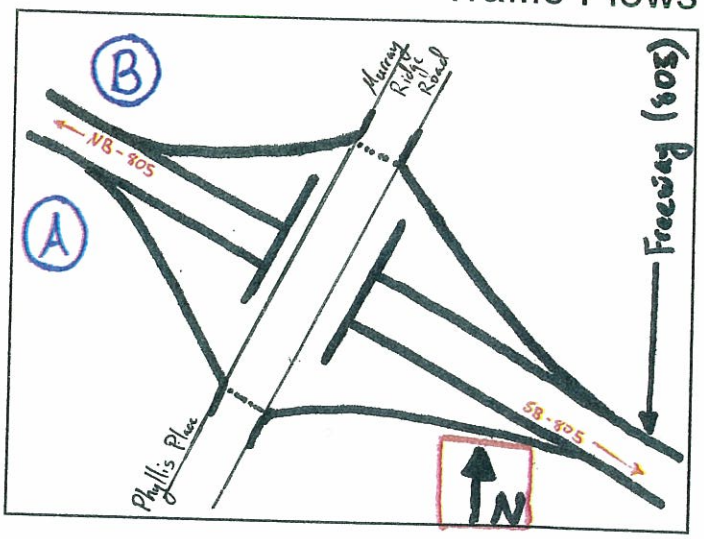

Lane Volumes (ILV/Hr)

Phase 1	Phase 2	Phase 3	~~Phase 4~~	~~Phase 5~~
437 1058	304 756	567		

Critical Lane Volumes (ILV/Hr)

Phase 1	Phase 2	Phase 3	~~Phase 4~~	~~Phase 5~~
1058	756	567		

Total Operating Level (ILV/hr):

Σ
2381

Is...

- ☐ < 1200 ILV/hr
- ☐ > 1200 ILV/hr but < 1500 ILV/hr
- ☒ > 1500 ILV/hr (CAPACITY)

Remarks: Stop-and-Go

ILV Calculation

Intersection: I-805 NB Ramps & Murray Ridge Road

Peak Hour: 2017 w/Project PM

Geometry Diagram

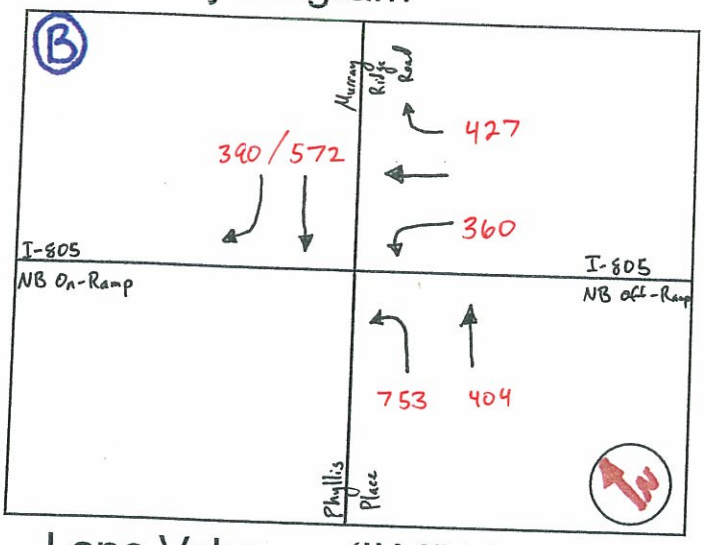

Traffic Flows

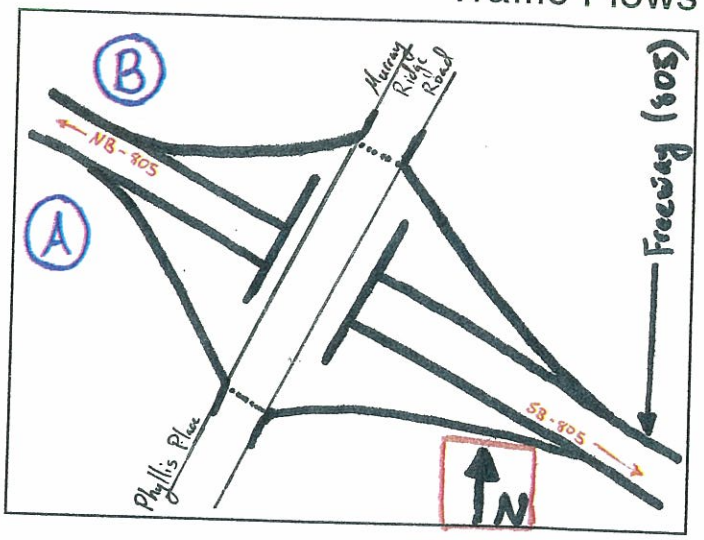

Lane Volumes (ILV/Hr)

Phase 1	Phase 2	Phase 3	~~Phase 4~~	~~Phase 5~~
481 481 404	427 360	753		

Critical Lane Volumes (ILV/Hr)

Phase 1	Phase 2	Phase 3	~~Phase 4~~	~~Phase 5~~
481	427	753		

Total Operating Level (ILV/hr):

1661

Is...

- ☐ < 1200 ILV/hr
- ☐ > 1200 ILV/hr but < 1500 ILV/hr
- ☒ > 1500 ILV/hr (CAPACITY)

Remarks: Stop-and-Go

ILV Calculation

Intersection: I-805 SB Ramps & Phyllis Place

Peak Hour: 2035 w/o Project AM

Geometry Diagram

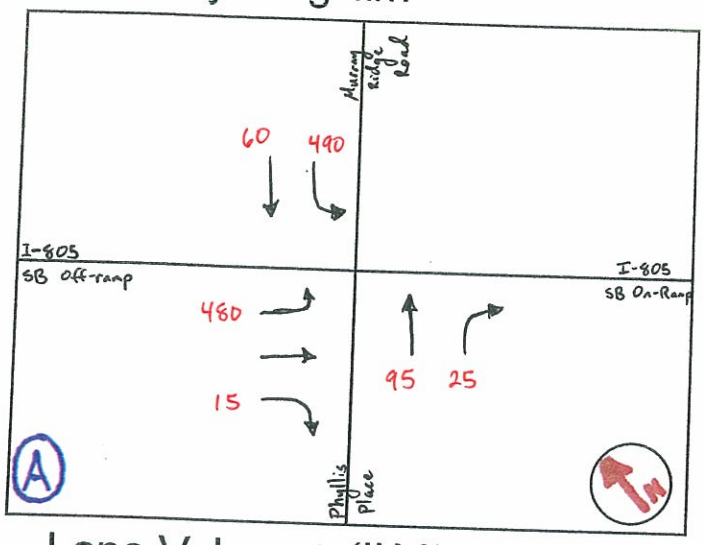

Traffic Flows

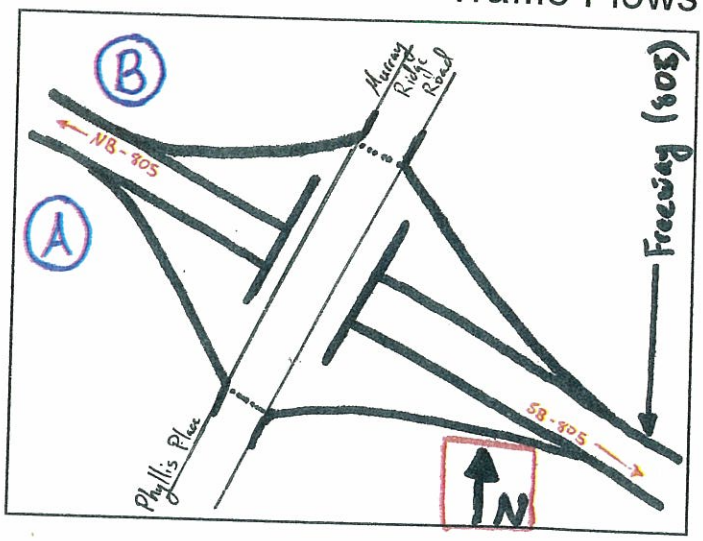

Lane Volumes (ILV/Hr)

Phase 1	Phase 2	Phase 3	~~Phase 4~~	~~Phase 5~~
60 120	480 15	490		

Critical Lane Volumes (ILV/Hr)

Phase 1	Phase 2	Phase 3	~~Phase 4~~	~~Phase 5~~
120	480	490		

Total Operating Level (ILV/hr):

1090

Is...

- [x] < 1200 ILV/hr
- [ ] > 1200 ILV/hr but < 1500 ILV/hr
- [ ] > 1500 ILV/hr (CAPACITY)

Remarks: Stable

ILV Calculation

Intersection: I-805 NB Ramps & Murray Ridge Road

Peak Hour: 2035 w/o Project AM

Geometry Diagram

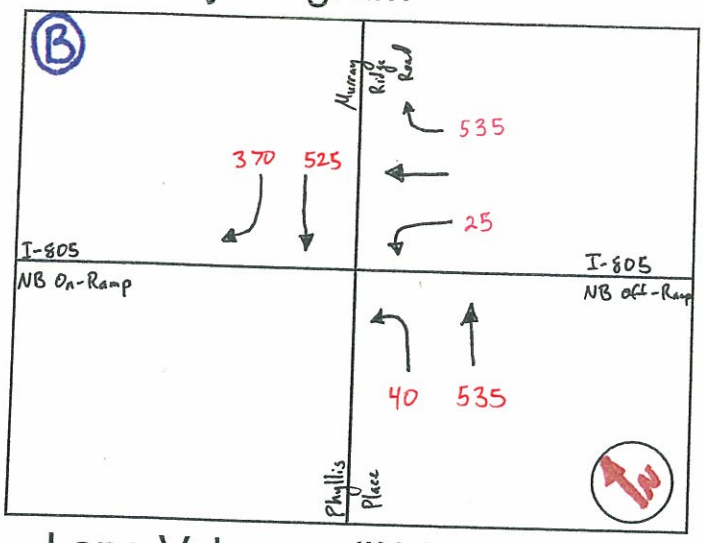

Traffic Flows

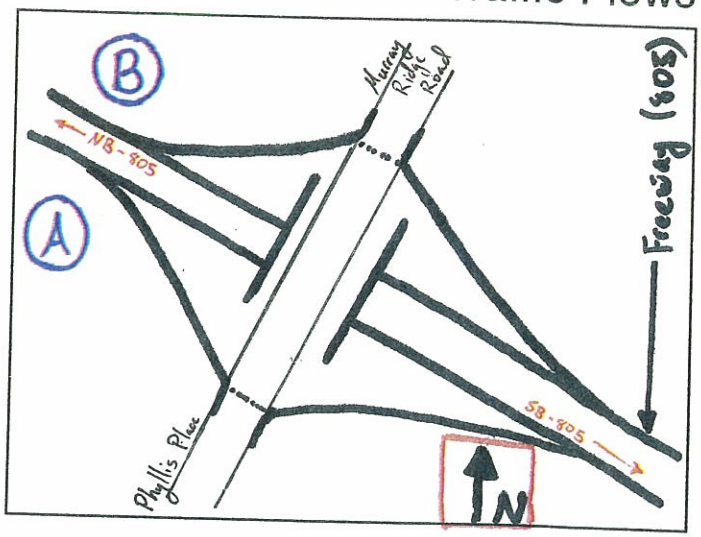

Lane Volumes (ILV/Hr)

Phase 1	Phase 2	Phase 3	~~Phase 4~~	~~Phase 5~~
447 448 535	535 25	40		

Critical Lane Volumes (ILV/Hr)

Phase 1	Phase 2	Phase 3	~~Phase 4~~	~~Phase 5~~
535	535	40		

Total Operating Level (ILV/hr):

Σ
1110

Is...

- [x] < 1200 ILV/hr
- [ ] > 1200 ILV/hr but < 1500 ILV/hr
- [ ] > 1500 ILV/hr (CAPACITY)

Remarks: Stable

ILV Calculation

Intersection: I-805 SB Ramps & Phyllis Place

Peak Hour: 2035 w/o Project PM

Geometry Diagram

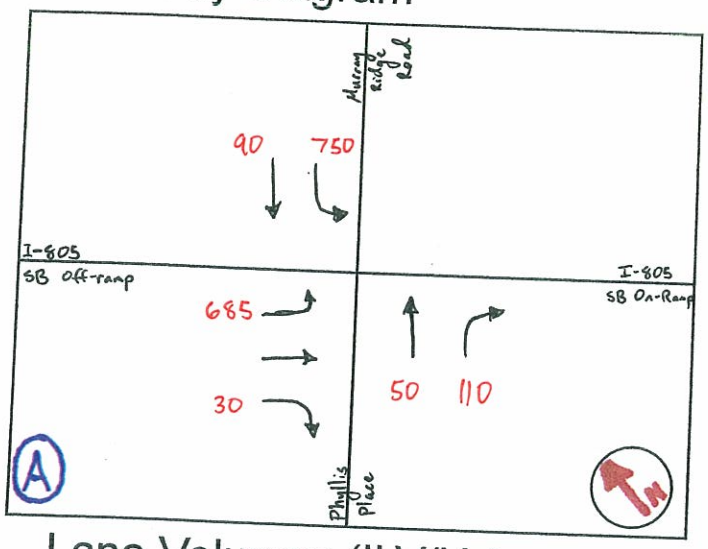

Traffic Flows

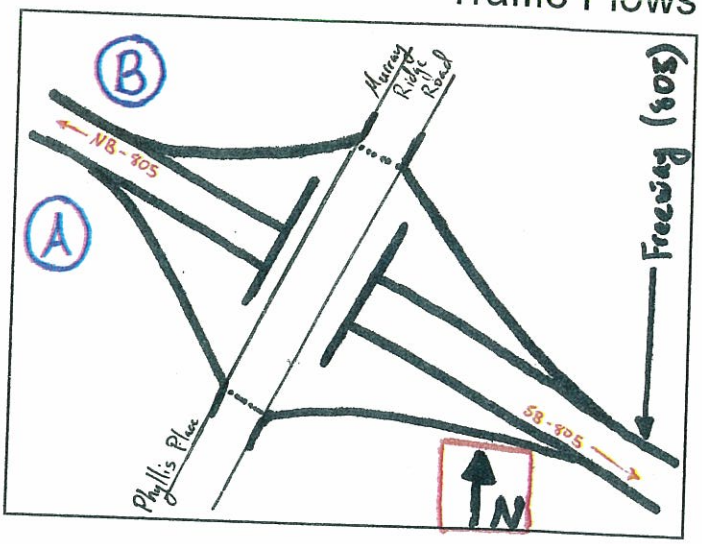

Lane Volumes (ILV/Hr)

Phase 1	Phase 2	Phase 3	~~Phase 4~~	~~Phase 5~~
90 160	685 30	750		

Critical Lane Volumes (ILV/Hr)

Phase 1	Phase 2	Phase 3	~~Phase 4~~	~~Phase 5~~
160	685	750		

Total Operating Level (ILV/hr):

1595

Is...

- ☐ < 1200 ILV/hr
- ☐ > 1200 ILV/hr but < 1500 ILV/hr
- ☒ > 1500 ILV/hr (CAPACITY)

Remarks: Stop-and-Go

ILV Calculation

Intersection: I-805 NB Ramps & Murray Ridge Road

Peak Hour: 2035 w/o Project PM

Geometry Diagram

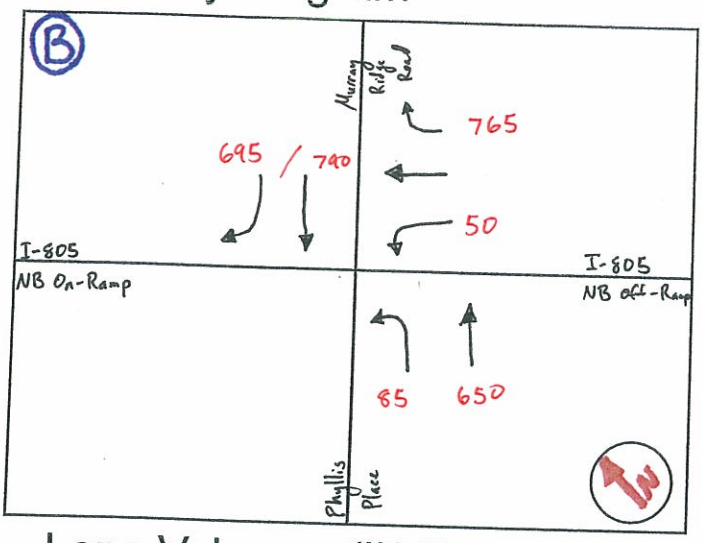

Traffic Flows

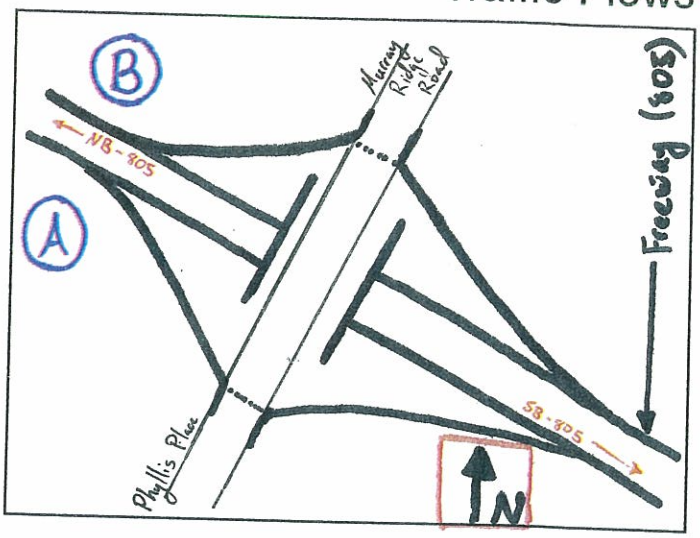

Lane Volumes (ILV/Hr)

Phase 1	Phase 2	Phase 3	~~Phase 4~~	~~Phase 5~~
742 743 650	765 50	85		

Critical Lane Volumes (ILV/Hr)

Phase 1	Phase 2	Phase 3	~~Phase 4~~	~~Phase 5~~
743	765	85		

Total Operating Level (ILV/hr):

Σ
1593

Is...

- ☐ < 1200 ILV/hr
- ☐ > 1200 ILV/hr but < 1500 ILV/hr
- ☒ > 1500 ILV/hr (CAPACITY)

Remarks: Stop-and-Go

ILV Calculation

Intersection: I-805 SB Ramps : Phyllis Place

Peak Hour: 2035 w/Project AM

Geometry Diagram

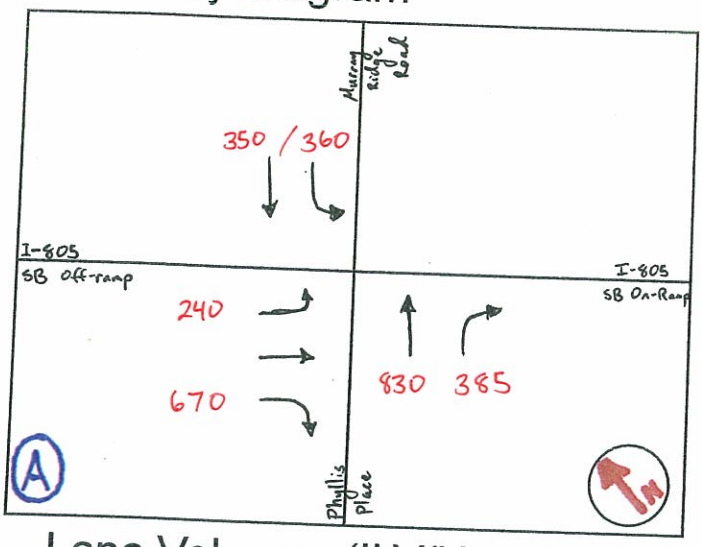

Traffic Flows

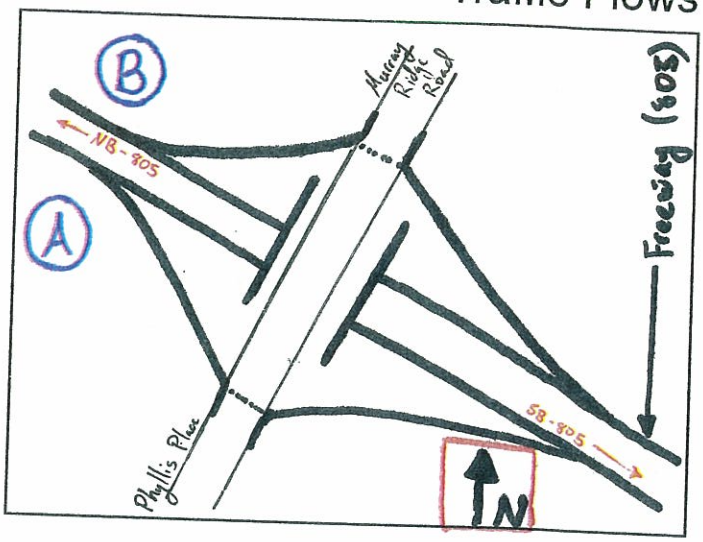

Lane Volumes (ILV/Hr)

Phase 1	Phase 2	Phase 3	~~Phase 4~~	~~Phase 5~~
350 1215	240 670	360		

Critical Lane Volumes (ILV/Hr)

Phase 1	Phase 2	Phase 3	~~Phase 4~~	~~Phase 5~~
1215	670	360		

Total Operating Level (ILV/hr):

2245

Is...

- ☐ < 1200 ILV/hr
- ☐ > 1200 ILV/hr but < 1500 ILV/hr
- ☒ > 1500 ILV/hr (CAPACITY)

Remarks: Stop-and-Go

ILV Calculation

Intersection: I-805 NB Ramps & Murray Ridge Road

Peak Hour: 2035 w/Project AM

Geometry Diagram

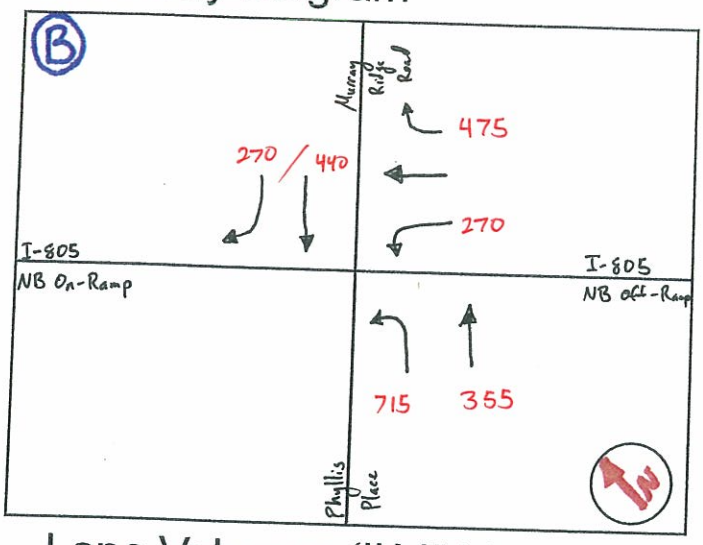

Traffic Flows

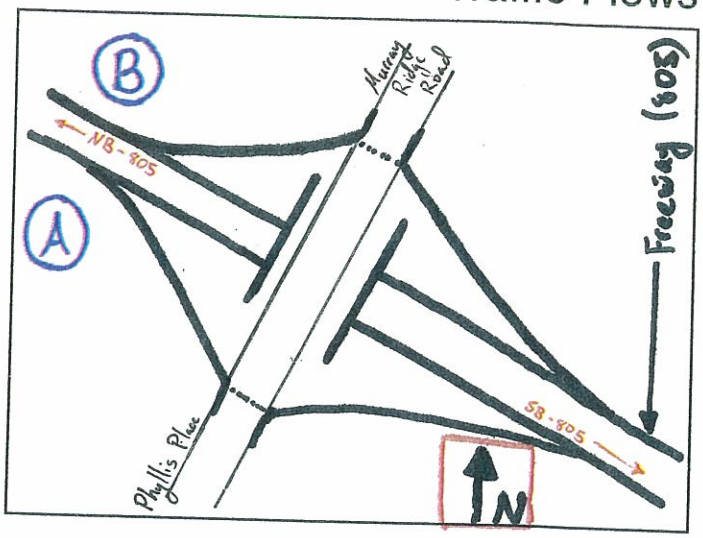

Lane Volumes (ILV/Hr)

Phase 1	Phase 2	Phase 3	~~Phase 4~~	~~Phase 5~~
355 355 355	475 270	715		

Critical Lane Volumes (ILV/Hr)

Phase 1	Phase 2	Phase 3	~~Phase 4~~	~~Phase 5~~
355	475	715		

Total Operating Level (ILV/hr):

Σ
1545

Is...

- ☐ < 1200 ILV/hr
- ☐ > 1200 ILV/hr but < 1500 ILV/hr
- ☒ > 1500 ILV/hr (CAPACITY)

Remarks: Stop-and-Go

ILV Calculation

Intersection: I-805 SB Ramps & Phyllis Place

Peak Hour: 2035 w/Project PM

Geometry Diagram

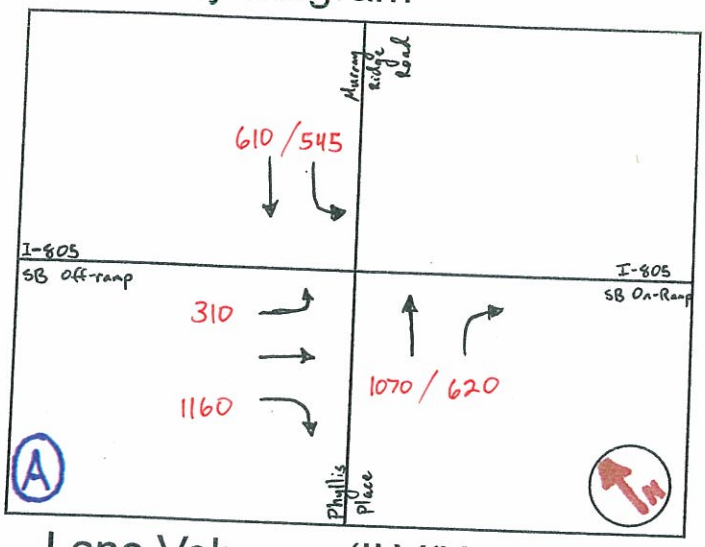

Traffic Flows

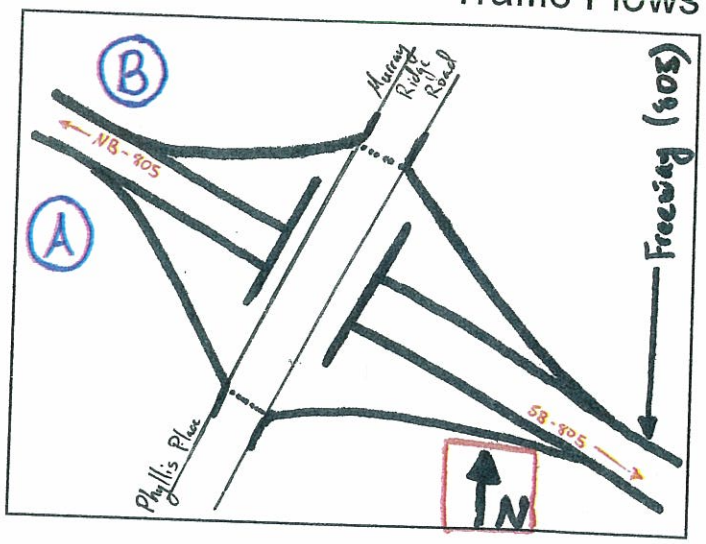

Lane Volumes (ILV/Hr)

Phase 1	Phase 2	Phase 3	~~Phase 4~~	~~Phase 5~~
610 1690	310 1160	545		

Critical Lane Volumes (ILV/Hr)

Phase 1	Phase 2	Phase 3	~~Phase 4~~	~~Phase 5~~
1690	310	545		

Total Operating Level (ILV/hr):

Σ
2545

Is...

- ☐ < 1200 ILV/hr
- ☐ > 1200 ILV/hr but < 1500 ILV/hr
- ☒ > 1500 ILV/hr (CAPACITY)

Remarks: Stop-and-Go

ILV Calculation

Intersection: I-805 NB Ramps & Murray Ridge Road

Peak Hour: 2035 w/Project PM

Geometry Diagram

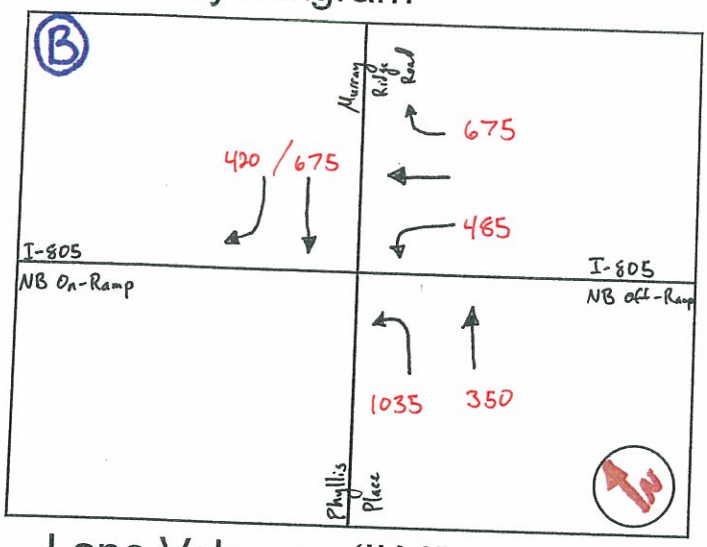

Traffic Flows

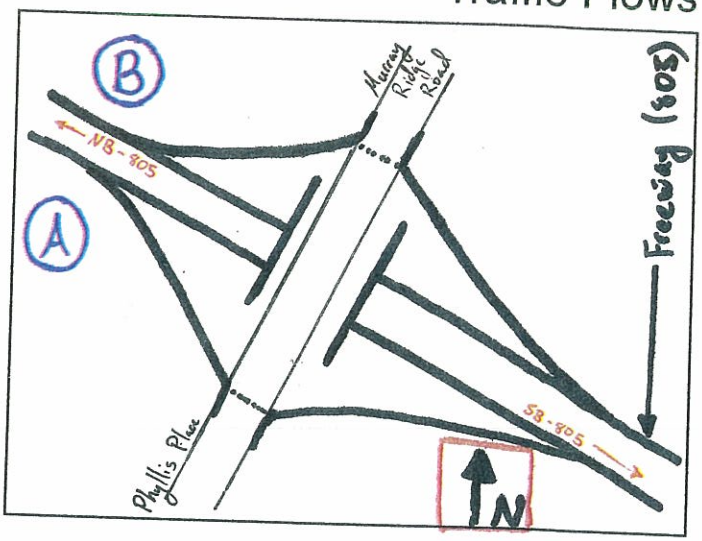

Lane Volumes (ILV/Hr)

Phase 1	Phase 2	Phase 3	~~Phase 4~~	~~Phase 5~~
547 548 350	675 485	1035		

Critical Lane Volumes (ILV/Hr)

Phase 1	Phase 2	Phase 3	~~Phase 4~~	~~Phase 5~~
548	675	1035		

Total Operating Level (ILV/hr):

2258

Is...

- ☐ < 1200 ILV/hr
- ☐ > 1200 ILV/hr but < 1500 ILV/hr
- ☒ > 1500 ILV/hr (CAPACITY)

Remarks: Stop-and-Go