THE CITY OF SAN DIEGO

# M E M O R A N D U M

DATE: August 20, 2020

TO: City of San Diego Planning Commission

FROM: Karen Lynch, Development Project Manager, Development Services

SUBJECT: Project No. 492749, T-Mobile Island View Market. Report No. PC-20-014
Continued from March 12, 2020, June 4, 2020 and July 30, 2020

---

This project, an existing 49-foot, 5-inch-tall faux palm tree, was originally presented to the Planning Commission on March 12, 2020 with a staff recommendation of denial. Pursuant to testimony and discussion of the project design, the project was continued, and the applicant was directed to review design options that would comply with current regulations and guidelines and to work with the community planning group to obtain their input and recommendation. A preliminary design was developed and submitted to staff for review but obtaining input from the Chollas Valley Community Planning Group was not possible prior to June 4, 2020 so the project was continued until July 30, 2020.

Subsequent to the last hearing, the preliminary design was further developed to include additional landscaping. The end result is that the 49-foot, 5-inch-tall monopalm will be replaced with a 47-foot, 5-inch-tall monoeucalyptus tree. The two adjacent mature palm trees will remain in place and two 36-inch-box Brisbane Box trees will be added on each side of the monoeucalyptus. An additional Brisbane Box and a 36-inch box Strawberry Tree will be installed near the front of the market on each side of the driveway. Staff has reviewed the plans and has found them acceptable and the findings can now be made in the affirmative (Attachments 4 and 5).

There were two key reasons for continuing this project from the July 30, 2020 hearing. The first was to allow an environmental determination to be made on the new project design. The project was determined to be categorically exempt from the California Environmental Quality Act (CEQA) pursuant to Section 15301, (Existing Facilities) and there are no pending appeals. The environmental exemption determination for this project was made on July 20, 2020 and the opportunity to appeal that determination ended August 4, 2020 (Attachment 3). In order to accommodate the appeal period, staff requested the project be continued until August 20, 2020.

The second reason was to allow the Chollas Valley Community Planning Group to review and discuss the new design as well as make a recommendation. The July meeting was adjourned until August 17, which will require staff to provide a verbal update of the recommendation on August 20, 2020.

In summary, the project requires the following permits:

1. Pursuant to SDMC Section 126.0602, a Planned Development Permit (PDP) for a 17-foot, 5-inch height increase over the CN-1-3 zone height of 30 feet (the tree is proposed to be 47 feet, 5 inches tall). The previous project also required a PDP for a side yard setback issue, but Crown Castle has addressed that by extending the equipment enclosure to the property line to meet the 0-foot setback.

2. Pursuant to SDMC 126.0402, a Neighborhood Development Permit for an equipment enclosure over 250 square feet. The equipment enclosure is a total of 251 square feet.

In conclusion, the project complies with the WCF Regulations (SDMC 141.0420) and, other than the requested height deviation, it will comply with the development regulations of the CN-1-3 zone. Staff has prepared draft findings in the affirmative to approve the project and recommends approval of PDP No. 2205379 and NDP No. 2205380 (Attachments 1 and 2).

Karen Lynch
Development Project Manager

Attachments:

1. Draft Permit
2. Draft Resolution
3. Environmental Exemption
4. Photo Simulations
5. Project Plans

KL/kl

**RECORDING REQUESTED BY**
CITY OF SAN DIEGO
DEVELOPMENT SERVICES
PERMIT INTAKE, MAIL STATION 501

**WHEN RECORDED MAIL TO**
**PROJECT MANAGEMENT**
**PERMIT CLERK**
**MAIL STATION 501**

INTERNAL ORDER NUMBER: 24006750 SPACE ABOVE THIS LINE FOR RECORDER'S USE

PLANNED DEVELOPMENT PERMIT NO. 2205379
NEIGHBORHOOD DEVELOPMENT PERMIT NO. 2205380
**T-MOBILE ISLAND VIEW MARKET PROJECT NO. 492749**
PLANNING COMMISSION

This Planned Development Permit No. 2205379 and Neighborhood Development Permit No. 2205380 is granted by the Planning Commission of the City of San Diego to AA Meram, LLC, Owner, and Crown Castle International, Permittee, pursuant to San Diego Municipal Code [SDMC] sections 141.0420, 126.0602 and 126.0402. The .28-acre site is located at 5080 Logan Avenue in the CN-1-3 zone of the Encanto Neighborhoods Community Plan area. The project site is legally described as: Parcel C of Parcel Map No. 267, in the City of San Diego, County of San Diego, State of California, filed in the Office of the County Recorder of San Diego County, June 10, 1970 as File No. 100421 of Official Records.

Subject to the terms and conditions set forth in this Permit, permission is granted to Owner/Permittee for a Wireless Communication Facility (WCF) described and identified by size, dimension, quantity, type, and location on the approved exhibits [Exhibit "A"] dated August 20, 2020, on file in the Development Services Department.

The project shall include:

a. A 47-foot, 5-inch-tall monoeucalyptus tree supporting 12 panel antenna, six Remote Radio Units and three Tower Mounted Amplifiers. The following antennas are included:
    i. Three measuring 33.1” x 20.6” x 8.3”
    ii. Three measuring 72” x 24” x 8.5”
    iii. Three measuring 56.2” x 12.1” x 7.9”
    iv. Three measuring 56.6” x 12.9” x 8.7”

b. A 251-square-foot equipment enclosure;

c. The monoeucalyptus tree will deviate from the CN-1-3 zone height limit of 30 feet by 17 feet, 5-inches;

d. Landscaping (planting, irrigation and landscape related improvements); and

e. Public and private accessory improvements determined by the Development Services Department to be consistent with the land use and development standards for this site in accordance with the adopted community plan, the California Environmental Quality Act [CEQA] and the CEQA Guidelines, the City Engineer's requirements, zoning regulations, conditions of this Permit, and any other applicable regulations of the SDMC.

**STANDARD REQUIREMENTS:**

1. This permit must be utilized within thirty-six (36) months after the date on which all rights of appeal have expired. If this permit is not utilized in accordance with Chapter 12, Article 6, Division 1 of the SDMC within the 36-month period, this permit shall be void unless an Extension of Time has been granted. Any such Extension of Time must meet all SDMC requirements and applicable guidelines in effect at the time the extension is considered by the appropriate decision maker. This permit must be utilized by September 3, 2023.

2. The above utilization date notwithstanding, the granting of this discretionary permit does not entitle the continued operation of the existing, expired facility. Within 60 days of permit approval, applications must be made for all required construction permits. Within 90 days of application, all required construction permits must be issued. Within 90 days of permit issuance, final inspection must be obtained.

3. This permit and corresponding use of this site shall **expire on September 3, 2030.** Upon expiration of this approval, the facilities and improvements described herein shall be removed from this site and the property shall be restored to its original condition preceding approval of this permit unless the applicant of record files a new application for a facility which will be subject to compliance with all regulations in effect at the time.

4. No later than ninety (90) days prior to the expiration of this approval, the Owner/Permittee may submit a new application to the Development Services Department for consideration with review and a decision by the appropriate decision maker at that time. Failure to submit prior to the deadline will be cause for enforcement for noncompliance, which may include penalties and fines.

5. Under no circumstances, does approval of this permit authorize the Owner/Permittee to utilize this site for WCF purposes beyond the permit expiration date. Use of this permit approval beyond the expiration date of this permit is prohibited.

No permit for the construction, occupancy, or operation of any facility or improvement described herein shall be granted, nor shall any activity authorized by this Permit be conducted on the premises until:

a. The Owner/Permittee signs and returns the Permit to the Development Services Department; and

b. The Permit is recorded in the Office of the San Diego County Recorder.

DRAFT

6. While this Permit is in effect, the subject property shall be used only for the purposes and under the terms and conditions set forth in this Permit unless otherwise authorized by the appropriate City decision maker.

7. This Permit is a covenant running with the subject property and all of the requirements and conditions of this Permit and related documents shall be binding upon the Owner/Permittee and any successor(s) in interest.

8. The continued use of this Permit shall be subject to the regulations of this and any other applicable governmental agency.

9. Issuance of this Permit by the City of San Diego does not authorize the Owner/Permittee for this Permit to violate any Federal, State or City laws, ordinances, regulations or policies including, but not limited to, the Endangered Species Act of 1973 [ESA] and any amendments thereto (16 U.S.C. § 1531 et seq.).

10. The Owner/Permittee shall secure all necessary building permits. The Owner/Permittee is informed that to secure these permits, substantial building modifications and site improvements may be required to comply with applicable building, fire, mechanical, and plumbing codes, and State and Federal disability access laws.

11. Construction plans shall be in substantial conformity to Exhibit "A." Changes, modifications, or alterations to the construction plans are prohibited unless appropriate application(s) or amendment(s) to this Permit have been granted.

12. All of the conditions contained in this Permit have been considered and were determined necessary to make the findings required for approval of this Permit. The Permit holder is required to comply with each and every condition in order to maintain the entitlements that are granted by this Permit.

If any condition of this Permit, on a legal challenge by the Owner/Permittee of this Permit, is found or held by a court of competent jurisdiction to be invalid, unenforceable, or unreasonable, this Permit shall be void. However, in such an event, the Owner/Permittee shall have the right, by paying applicable processing fees, to bring a request for a new permit without the "invalid" conditions(s) back to the discretionary body which approved the Permit for a determination by that body as to whether all of the findings necessary for the issuance of the proposed permit can still be made in the absence of the "invalid" condition(s). Such hearing shall be a hearing de novo, and the discretionary body shall have the absolute right to approve, disapprove, or modify the proposed permit and the condition(s) contained therein.

**ENGINEERING REQUIREMENTS:**

13. Prior to the issuance of any construction permit the Owner/Permittee shall submit a Water Pollution Control Plan (WPCP). The WPCP shall be prepared in accordance with the guidelines in Part 2 Construction BMP Standards Chapter 4 of the City's Storm Water Standards.

**LANDSCAPE REQUIREMENTS:**

14. Prior to issuance of any building permit, the Owner/Permittee shall submit complete landscape and irrigation construction documents, which are consistent with the Landscape Standards, to the Development Services Department for approval. The construction documents shall be in substantial conformance with Exhibit "A," Landscape Development Plan, on file in the Development Services Department. Construction plans shall provide a 40-square-foot area around each tree that is unencumbered by hardscape and utilities unless otherwise approved per §142.0403(b)5.

15. The Owner/Permittee shall be responsible for the maintenance of all landscape improvements shown on the approved plans, unless long-term maintenance of said landscaping will be the responsibility of another entity approved by the Development Services Department. All required landscape shall be maintained consistent with the Landscape Standards in a disease, weed, and litter free condition at all times. Severe pruning or "topping" of trees is not permitted.

16. If any required landscape (including existing or new plantings, hardscape, landscape features, etc.) indicated on the approved construction documents is damaged or removed, the Owner/Permittee shall repair and/or replace in kind and equivalent size per the approved documents to the satisfaction of the Development Services Department within 30 days of damage.

**PLANNING/DESIGN REQUIREMENTS:**

17. Every aspect of this project is considered an element of concealment including but not limited to the dimensions, bulk and scale, color, materials and texture. Any future modifications to this permit must not defeat concealment.

18. The WCF shall conform to the approved construction plans.

19. Photo simulations shall be printed in color on the construction plans.

20. The Owner/Permittee shall install and maintain appropriate warning signage on the WCF as required by State and Federal regulations. The Owner/Permittee shall be responsible for complying with all State and Federal regulations.

21. The accuracy and validity of the RF Compliance Report, submitted by the Permittee, shall be assured while the WCF is in operation. If requested by the City, Owner/Permittee shall provide an updated RF Compliance Report to address any issues associated with the emitting components of the WCF.

22. All equipment, including transformers, emergency generators and air conditioners belonging to the Owner/Permittee shall be designed and operated consistent with the City noise ordinance. Ventilation openings shall be baffled and directed away from residential areas. Vibration resonance of operating equipment in the equipment enclosures shall be eliminated.

DRAFT

23. All facilities and related equipment shall be maintained in good working order. Any damaged equipment shall be repaired or replaced within thirty (30) calendar days of notification by the City of San Diego.

24. The Owner/Permittee shall notify the City within 30 days of the sale or transfer of this site to any other provider or if the site is no longer operational, in which case, the removal and the restoration of this site to its original condition is required.

25. The trunk and any hand-holes shall be covered with bark material to match the monoeucalyptus trunk to the satisfaction of the Development Services Department.

26. All coaxial conduits shall be routed up through the caisson and into the tree to the satisfaction of the Development Services Department. "Doghouse" cable housings are not permitted.

27. All branches at the antenna level shall extend a minimum of 24-inches beyond the entire vertical face of the proposed antennas to the satisfaction of the Development Services Department.

28. Starting branch height shall be no higher than 12-feet, as illustrated on the stamped, approved Exhibit "A."

29. The tree shall maintain a minimum density of four branches per foot throughout the life of the permit.

30. All exposed cables, brackets and supports shall be painted to match the faux tree foliage to the satisfaction of the Development Services Department.

31. RF socks fully covering the front and back of the antennas (and any other components) shall be used.

32. All private outdoor lighting shall be shaded and adjusted to fall on the same premises where such lights are located and in accordance with the applicable regulations in the SDMC.

**INFORMATION ONLY:**

- Please note that a Telecom Planning Inspection Issue will be placed on the project prior to Final Clearance from the City's Building Inspector to ensure compliance with the approved plans and associated conditions. Prior to calling for your Final Inspection from your building inspection official, please contact the Project Manager listed below at (619) XXX-XXXX to schedule an inspection of the completed facility. Please schedule this administrative inspection at least five working days ahead of the requested Final Inspection date.

- The issuance of this development permit alone does not allow the immediate commencement or continued operation of the proposed use on site. The operation allowed by this discretionary permit may only begin or recommence after all conditions listed on this permit are fully completed and all required ministerial permits have been issued and received final inspection.

DRAFT

- Any party on whom fees, dedications, reservations, or other exactions have been imposed as conditions of approval of this Permit, may protest the imposition within ninety days of the approval of this development permit by filing a written protest with the City Clerk pursuant to California Government Code section 66020.

- This development may be subject to impact fees at the time of construction permit issuance.

APPROVED by the Planning Commission of the City of San Diego on August 20, 2020 by Resolution No. _____.

DRAFT

Permit Type/PTS Approval No.: PDP No. 2205379/NDP No. 2205380
Date of Approval: August 20, 2020

AUTHENTICATED BY THE CITY OF SAN DIEGO DEVELOPMENT SERVICES DEPARTMENT

_____
Karen Lynch
Development Project Manager

**NOTE: Notary acknowledgment must be attached per Civil Code section 1189 et seq.**

---

**The undersigned Owner/Permittee**, by execution hereof, agrees to each and every condition of this Permit and promises to perform each and every obligation of Owner/Permittee hereunder.

**AA Meram, LLC.**
Owner

By _____

**T-Mobile West, LLC**
Permittee

By _____
NAME:
TITLE:

**NOTE: Notary acknowledgments must be attached per Civil Code section 1189 et seq.**

DRAFT

**ATTACHMENT 2**

PLANNING COMMISSION RESOLUTION NO. _____
PLANNED DEVELOPMENT PERMIT NO. 2205379
NEIGHBORHOOD DEVELOPMENT PERMIT NO. 2205380
**T-MOBILE ISLAND VIEW MARKET - PROJECT NO. 492749**

WHEREAS, Crown Castle International, Permittee and AA Meram LLC, Owner, filed an application with the City of San Diego for a permit for a Wireless Communication Facility (as described in and by reference to the approved Exhibits "A" and corresponding conditions of approval for the associated Permit No.'s 2205379 and 2205380), on portions of a .28-acre site;

WHEREAS, the project site is located at 5080 Logan Avenue in the CN-1-3 zone of the Encanto Neighborhoods Community Planning area;

WHEREAS, the project site is legally described as Parcel C of Parcel Map No. 267, in the City of San Diego, County of San Diego, State of California, filed in the Office of the County Recorder of San Diego County, June 10, 1970 as File No. 100421 of Official Records;

WHEREAS, on July 20, 2020, the City of San Diego, as Lead Agency, through the Development Services Department, made and issued an Environmental Determination that the project is exempt from the California Environmental Quality Act (CEQA) (Public Resources Code Section 21000 et seq.) under CEQA Guideline Section 15301 (Existing Facilities) and there was no appeal of the Environmental Determination filed within the time period provided by San Diego Municipal Code Section 112.0520;

WHEREAS, on August 20, 2020, the Planning Commission of the City of San Diego considered Planned Development Permit (PDP) No. 2205379 and Neighborhood Development Permit (NDP) No. 2205380 pursuant to the Land Development Code of the City of San Diego; NOW, THEREFORE,

BE IT RESOLVED by the Planning Commission of the City of San Diego, that it adopts the following findings with respect to PDP No. 2205379 and NDP No. 2205380:

DRAFT

## A. PLANNED DEVELOPMENT PERMIT [SDMC Section 126.0605]

### 1. The proposed development will not adversely affect the applicable land use plan.

The Encanto Neighborhoods Community Plan refers to the Wireless Communication Facilities (WCF) regulations (San Diego Municipal Code Section 141.0420) and the WCF Guidelines for direction on the design and development of WCFs proposed within the community. Pursuant to SDMC Section 141.0420(g)(2), WCFs shall use all reasonable means to conceal or minimize visual impacts through integration. Integration shall be accomplished through architecture, landscape and siting solutions. Additionally, the City's General Plan addresses WCFs in the Urban Design Element (UD-A.15), stating that the visual impact of WCFs should be minimized by concealing them in existing structures, or using camouflage and screening techniques to hide or blend them into the surrounding area. Facilities should be designed to be aesthetically pleasing and respectful of the neighborhood context. Equipment associated with the WCF should be located in underground vaults or unobtrusive structures.

The project is located at 5080 Logan Avenue in the CN-1-3 zone. An existing 49-foot, 5-inch tall monopalm exists on the property that was approved in 2006 and the permit expired in 2016. Crown Castle is proposing to modify the WCF from a palm tree to a eucalyptus tree supporting twelve panel antennas, six remote radio units and three tower mounted amplifiers. The equipment enclosure would be slightly expanded (2 feet, 2 inches) to extend to the western property line in order to meet the 0-foot setback requirement of the CN-1-3 zone. The WCF is situated in the rear of the lot, approximately 93 feet north of Logan Avenue behind the Island View Market. No other similar sized eucalyptus trees exist on site, however, there are two mature palm trees very close to the proposed eucalyptus tree and Crown is proposing to install two 36-inch box Brisbane Box trees on each side of the faux eucalyptus tree. Additionally, a 36-inch box Strawberry tree and Brisbane Box tree will be installed toward the front of the market on each side of the drive aisle leading to the rear portion of the lot.

A Planned Development Permit (PDP) is required per SDMC 141.0602 due to the proposed height of the tree, which at 47 feet, 5 inches, exceeds the 30-foot height limit of the CN-1-3 zone. The intent of a PDP is to encourage imaginative and innovative planning, to assure that the development achieves the purpose and intent of the applicable land use plan and that it would be preferable to what would be achieved by strict conformance with the regulations. Expiration dates are imposed on WCFs to review and modify these facilities to comply with current design standards. The faux eucalyptus tree with a fuller branching structure has more opportunity to conceal the antennas and associated equipment which, when designed correctly, is a better design option than a monopalm. The antennas can more easily be concealed or screened by the branching structure of a tree. Pursuant to SDMC Section 141.0420(e)(6), faux landscaping may be used on a premise if natural vegetation similar in size and species is proposed as part of the development. In this case, Crown Castle is installing four 36-inch box trees to help the faux tree integrate into the property.

DRAFT

The proposed WCF complies with the City's Land Development Code, Section 141.0420, Wireless Communication Facilities, as well as the design and location requirements of the General Plan. Therefore, the proposed WCF will not adversely affect the applicable land use plan or the City's General Plan.

2. **The proposed development will not be detrimental to the public health, safety, and welfare.**

The WCF is located behind a commercial building in the community of Encanto Neighborhoods at 5080 Logan Avenue. The project site is zoned CN-1-3. WCFs are permitted in this zone as a Limited Use pursuant to compliance with the underlying zone and the WCF regulations. The project proposes to replace an existing 49-foot, 5-inch tall monopalm with a 47-foot, 5-inch-tall monoeucalyptus tree. The associated equipment is in a 251-square-foot equipment shelter.

The project was determined to be exempt from CEQA pursuant to Section 15301, (Existing Facilities). The conditions of approval for the project will require compliance with several operational constraints and development controls intended to assure the continued public health, safety and welfare. All proposed improvement plans associated with the project will be reviewed prior to issuance of construction permits and inspected during construction to assure the project will meet or exceed all relevant and applicable building, electrical, mechanical, plumbing and fire codes.

The Telecommunication Act of 1996 preempts local governments from regulating the "placement, construction and modification of wireless communication facilities on the basis of the environmental effects of Radio Frequency (RF) emissions to the extent that such facilities comply with the Federal Communication Commission's (FCC) standards for such emissions." An Electromagnetic Energy Exposure Report was prepared for the WCF project previously, which concluded that the project will be in compliance with FCC standards for RF emissions. Therefore, the project will not be detrimental to the public health, safety, and welfare.

3. **The proposed development will comply with the regulations of the Land Development Code including any proposed deviations pursuant to Section 126.0602(b)(1) that are appropriate for this location and will result in a more desirable project than would be achieved if designed in strict conformance with the development regulations of the applicable zone, and any allowable deviations that are otherwise authorized pursuant to the Land Development Code.**

Wireless Communication Facilities (WCFs) are permitted on premises with non-residential uses in commercial zones with the processing of a Limited Use Permit (Process One application); however, the project is proposing a height deviation, which requires a Planned Development Permit, Process Four. The existing monopalm is 49 feet, 5 inches tall and the new monoeucalyptus tree is proposed to be 47 feet, 5 inches tall representing a 17-foot, 5-inch deviation to the CN-1-3 height limit of 30 feet.

The WCF Design Requirements [LDC Section 141.0420(g)(2)] state that WCFs "shall utilize all reasonable means to conceal or minimize the visual impacts of the WCF through integration. Integration with existing structures or with existing uses shall be accomplished through the use of architecture, landscape, and siting solutions. Although there are not enough established similar trees in the setting where the monoeucalyptus tree is proposed, Crown Castle is proposing to add a Brisbane Box tree on each side of the faux tree and the existing mature palms will remain on site adjacent to the proposed faux tree to help with integration. Two additional trees, a Brisbane Box and a Strawberry Tree are proposed near the front of the market on each side of the driveway. The monoeucalyptus tree will support up to twelve panel antennas, six remote radios and three tower mounted amplifiers. The associated equipment area will be extended 2 feet, 2 inches toward the western property line to meet the optional 0' side yard setback.

The purpose of a PDP, as stated in SDMC 126.0601, is to establish a review process for development that allows an applicant to request greater flexibility from the strict application of the regulations than would be allowed through a deviation process. The intent is to encourage imaginative and innovative planning and to assure that the development achieves the purpose and intent of the applicable land use plan and that it would be preferable to what would be achieved by strict conformance with the regulations. Expiration dates are imposed on WCFs to review and modify these facilities to comply with current design standards.

The existing WCF is a 49-foot, 5-inch tall monopalm that was originally approved in 2006, when monopalms were still considered a design solution developed with an intent to integrate or camouflage a WCF in the early days of camouflage technology. Since this project was submitted in 2016, staff has recommended that the monopalm be replaced with a structure that would comply with the WCF design regulations. Crown Castle has proposed to reduce the number of antennas from 12 to six and to replace the T-arms from 10 feet in length to 6 feet, 3 inches. However, the nature and form factor of a palm tree (specifically, the contrast of straight antennas against the radial fronds) does not lend itself to concealing or camouflaging antennas and associated equipment. The WCF regulations require that visual impacts associated with WCFs be minimized or concealed through integration. Integration is to be accomplished with architecture, landscape and siting solutions.

The existing network coverage provided by the 49-foot, 5-inch tall monopalm would be significantly impacted if the two-foot reduction, currently proposed for the monoeucalyptus were further reduced, which could result in the need for additional sites within the community. The branching structure and branch density of the monoeucalyptus tree in addition to the antenna socks, will provide greater concealment for the hardware than a monopalm. The location of the proposed monoeucalyptus tree behind the market, approximately 93 feet from Logan Avenue provides distance and partial views since the tree will be located in the rear of the market. The existing mature palm trees located adjacent to the proposed faux tree will provide additional context for the faux tree and the two new Brisbane Box trees will soon grow enough to provide additional screening and context.

In addition to the PDP, the project requires a Neighborhood Development Permit pursuant to SDMC 141.0420(g)(3) to allow am equipment area larger than 250 square feet. The

DRAFT

existing equipment area included the monopalm in a concrete block enclosure totaling 357 square feet. The enclosure will be modified to take the monoeucalyptus out of the enclosure and the enclosure will be extended to the western property line 2 feet, 2 inches to comply with the optional 0' side yard setback. The new square footage will total 251 square feet, representing one foot over the maximum size.
The proposed project will comply with the regulations of the Land Development Code including the proposed deviations pursuant to Section 126.0602(b)(1) that are appropriate for this location and will result in a more desirable project than would be achieved if designed in strict conformance with the development regulations of the CN-1-3 zone, and any allowable deviations that are otherwise authorized pursuant to the Land Development Code.

**B. NEIGHBORHOOD DEVELOPMENT PERMIT [SDMC 126.0404]**

1. **The proposed development will not adversely affect the applicable land use plan.**

   Please see PDP Finding No. 1 above for facts supporting this Finding. For the reasons described in that Finding, which are hereby incorporated into this Finding by reference, the proposed development will adversely affect the applicable land use plan.

2. **The proposed development will not be detrimental to the public health, safety, and welfare.**

   Please see PDP Finding No. 2 above for facts supporting this Finding. For the reasons described in that Finding, which are hereby incorporated into this Finding by reference, the proposed development will not be detrimental to the public health, safety, and welfare.

3. **The proposed development will comply with the applicable regulations of the Land Development Code including any allowable deviations pursuant to the Land Development Code.**

   Please see PDP Finding No. 3 above for facts supporting this Finding. For the reasons described in that Finding, which are hereby incorporated into this Finding by reference, the proposed development will not comply with the applicable regulations of the Land Development Code including any allowable deviations pursuant to the Land Development Code.

The above findings are supported by the minutes, maps and exhibits, all of which are incorporated herein by this reference.

BE IT FURTHER RESOLVED that, based on the findings hereinbefore adopted by the Planning Commission, PDP No. 2205379 and NDP No. 2205380 is hereby GRANTED by the Planning

Commission to the referenced Owner/Permittee, in the form, exhibits, terms and conditions as set forth in Permit No. 2205379/2205380, a copy of which is attached hereto and made a part hereof.

Karen Lynch
Development Project Manager
Development Services

Adopted on: August 20, 2020

IO#: 24006750

DRAFT

**NOTICE OF EXEMPTION**

**ATTACHMENT 3**

*(Check one or both)*

TO: __X__ RECORDER/COUNTY CLERK
P.O. BOX 1750, MS A-33
1600 PACIFIC HWY, ROOM 260
SAN DIEGO, CA 92101-2422

_____ OFFICE OF PLANNING AND RESEARCH
1400 TENTH STREET, ROOM 121
SACRAMENTO, CA 95814

FROM: CITY OF SAN DIEGO
DEVELOPMENT SERVICES DEPARTMENT
1222 FIRST AVENUE, MS 501
SAN DIEGO, CA 92101

Project No.: 492749

Project Title: T-Mobile Island View Market

PROJECT LOCATION-SPECIFIC: The project is located 5080 Logan Avenue, San Diego, CA.

PROJECT LOCATION-CITY/COUNTY: San Diego/San Diego

DESCRIPTION OF NATURE AND PURPOSE OF THE PROJECT: Planned Development Permit (PDP) and Neighborhood Development Permit (NDP) application for the modification of an existing Wireless Communication Facility (WCF). The WCF consists a 47-foot, 5-inch tall faux eucalyptus tree supporting 12 antennas and associated components. The existing equipment area is proposed to be expanded slightly and new landscape will be installed. The previous permit associated with this WCF expired and a new permit is required under the current regulations. The project is proposing to deviate from the CN-1-3 zone height limit of 30-feet.

NAME OF PUBLIC AGENCY APPROVING PROJECT: City of San Diego

NAME OF PERSON OR AGENCY CARRYING OUT PROJECT: Sonal Thakur, 3350 East Birch Street Suite 250, Brea CA, 92821. 714 328-4349

EXEMPT STATUS: (CHECK ONE)

( ) MINISTERIAL (SEC. 21080(b)(1); 15268);
( ) DECLARED EMERGENCY (SEC. 21080(b)(3); 15269(a));
( ) EMERGENCY PROJECT (SEC. 21080(b)( 4); 15269 (b)(c)..
(X) CATEGORICAL EXEMPTION: 15301 (Existing Facilities)
( ) STATUTORY EXEMPTION:

REASONS WHY PROJECT IS EXEMPT: The City of San Diego conducted an environmental review which determined that the proposed project is exempt from CEQA pursuant to CEQA Guidelines Section 15301, which allows for the operation, repair, maintenance, permitting, leasing, licensing, or minor alteration of existing facilities (public or private), involving negligible or no expansion of use beyond that existing at the time of the determination. The proposed project is only permitting the existing facility and modifications without expanding the use of the WCF and is located on an existing developed site which lacks sensitive resources. No environmental impacts were identified for the proposed project and none of the exceptions described in CEQA Guidelines Section 15300.2 apply.

**ATTACHMENT 3**

LEAD AGENCY CONTACT PERSON: Jeffrey Szymanski TELEPHONE: 619 446-5324

IF FILED BY APPLICANT:

1. ATTACH CERTIFIED DOCUMENT OF EXEMPTION FINDING.
2. HAS A NOTICE OF EXEMPTION BEEN FILED BY THE PUBLIC AGENCY APPROVING THE PROJECT?
   ( ) YES ( ) NO

IT IS HEREBY CERTIFIED THAT THE CITY OF SAN DIEGO HAS DETERMINED THE ABOVE ACTIVITY TO BE EXEMPT FROM CEQA

Jeff Szymanski / SENIOR PLANNER 8/4/2020

SIGNATURE/TITLE DATE

CHECK ONE:

(X) SIGNED BY LEAD AGENCY DATE RECEIVED FOR FILING WITH COUNTY

CLERK OR OPR:

CROWN CASTLE

# 824829

## Island View Market

5080 Logan Avenue San Diego CA 92113

ARTISTIC engineering
AEsims.com
877.9AE.sims

View 1

Existing

Proposed — Looking northeast from Logan Avenue

ATTACHMENT 4

Accuracy of photo simulation based upon information provided by project applicant.

CROWN CASTLE

# 824829

## Island View Market

5080 Logan Avenue San Diego CA 92113

ARTISTIC engineering
AEsims.com
877.9AE.sims

View 2

Existing

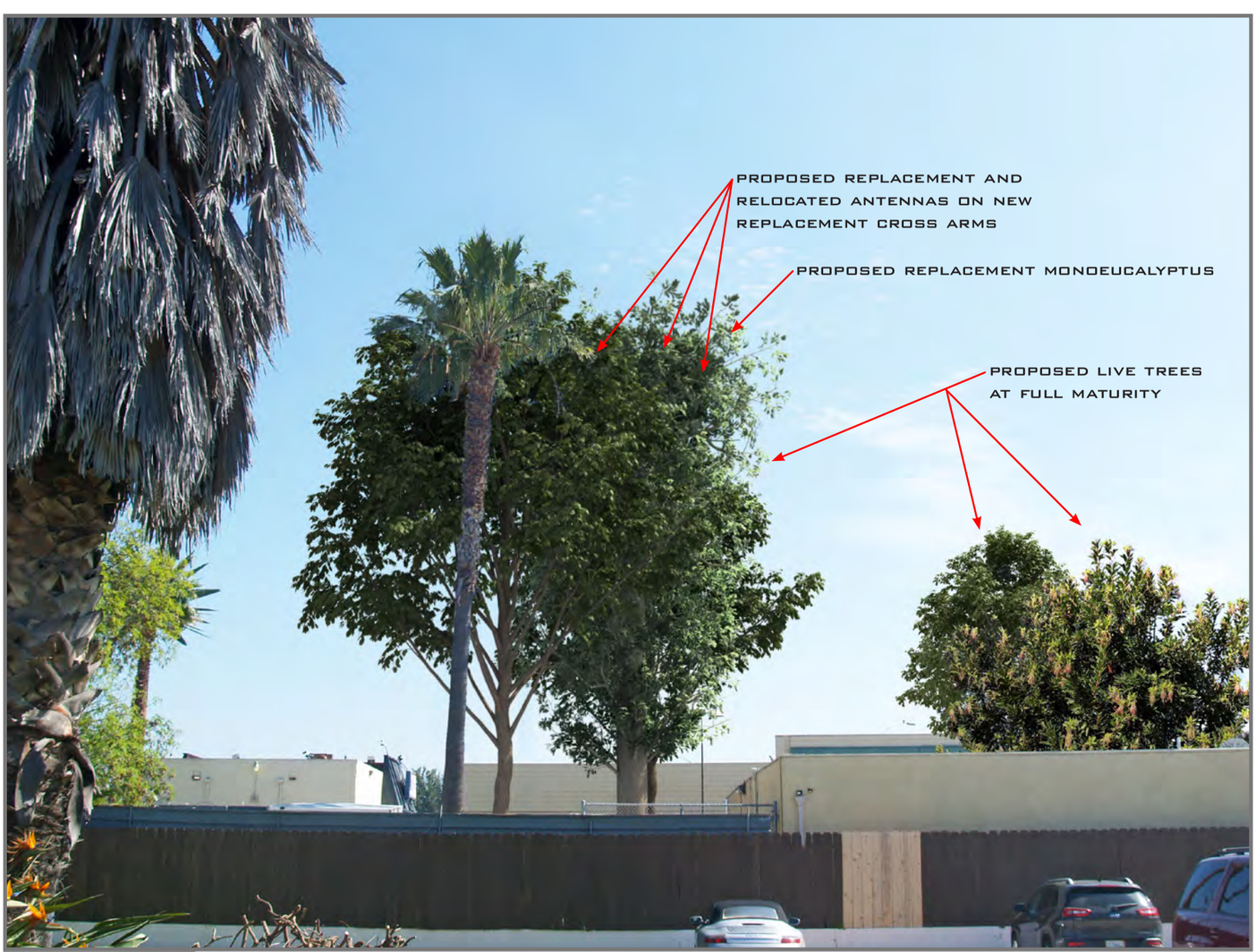


Proposed Looking east from adjacent property

ATTACHMENT 4

Accuracy of photo simulation based upon information provided by project applicant.

CROWN CASTLE

# 824829

## Island View Market

5080 Logan Avenue San Diego CA 92113

ARTISTIC engineering
AEsims.com
877.9AE.sims

View 3

Existing

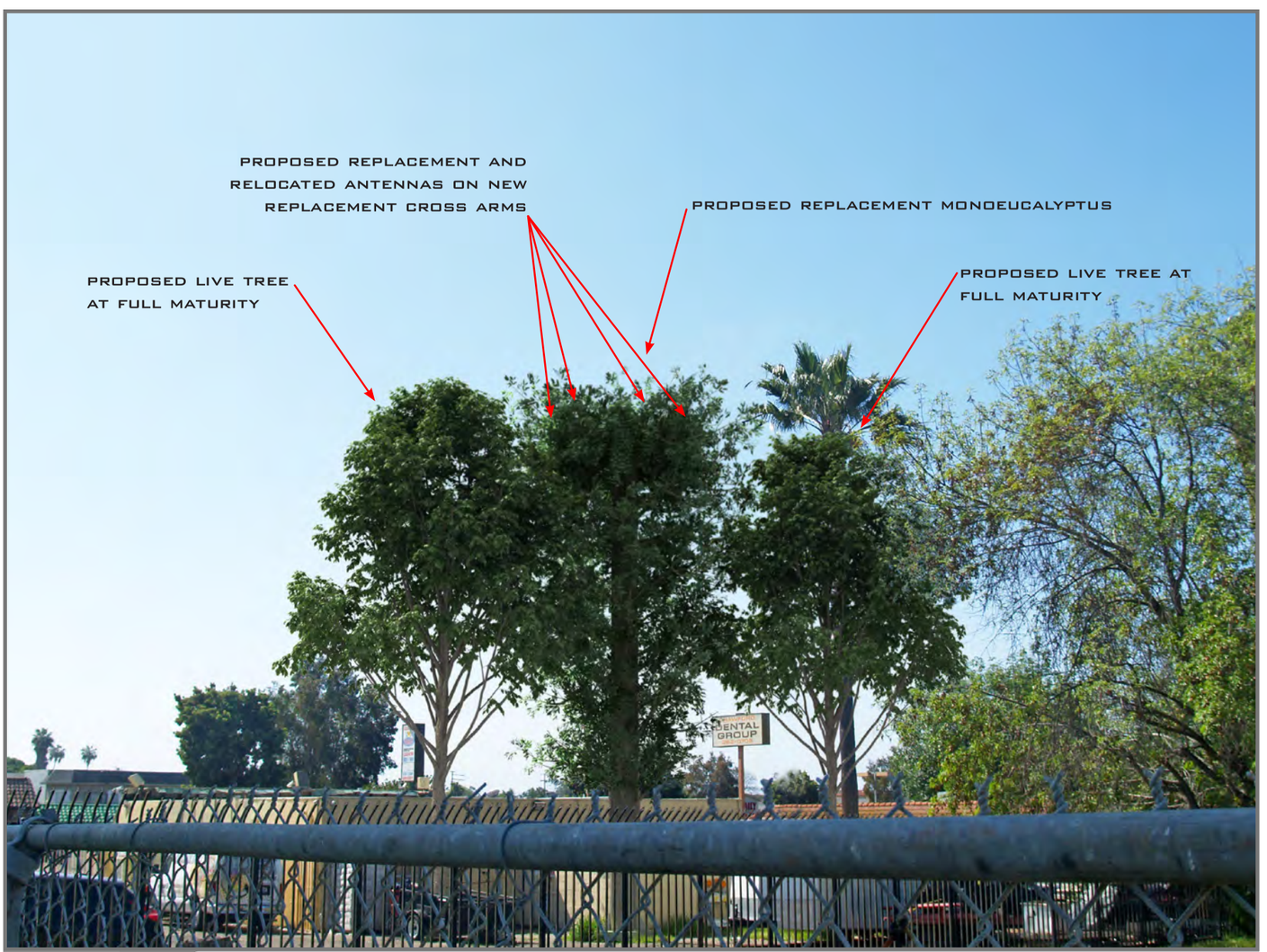


Proposed — Looking southwest from adjacent property

ATTACHMENT 4

Accuracy of photo simulation based upon information provided by project applicant.

CROWN CASTLE

# 824829

## Island View Market

5080 Logan Avenue San Diego CA 92113

ARTISTIC engineering
AEsims.com
877.9AE.sims

View 4

Existing

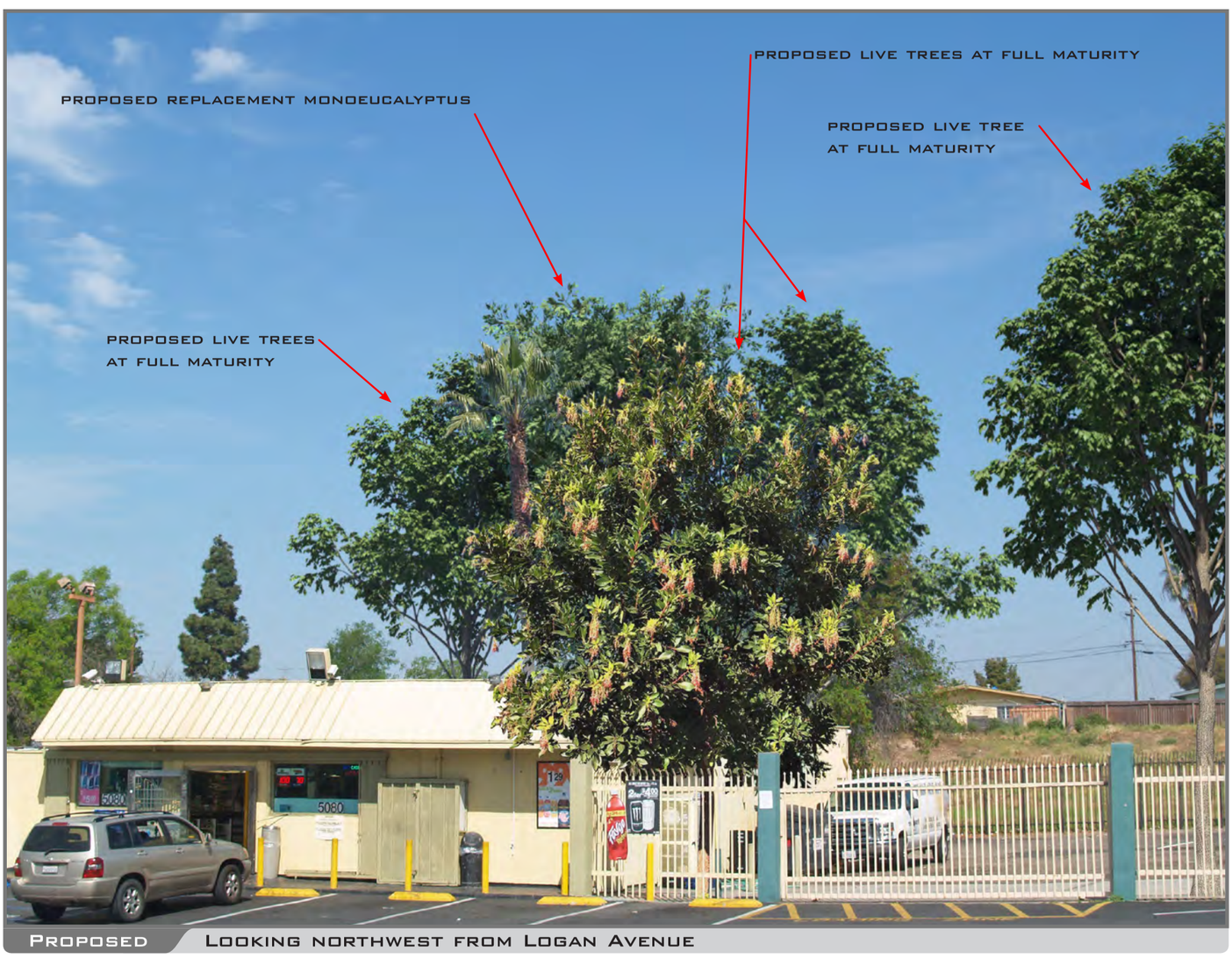


Proposed — Looking northwest from Logan Avenue

ATTACHMENT 4

Accuracy of photo simulation based upon information provided by project applicant.

CROWN CASTLE

# 824829

## Island View Market

5080 Logan Avenue San Diego CA 92113

ARTISTIC engineering
AEsims.com
877.9AE.sims

View 5

Existing

Proposed — Looking northeast from Logan Avenue

ATTACHMENT 4

Accuracy of photo simulation based upon information provided by project applicant.

CROWN CASTLE

# 824829

## Island View Market

5080 Logan Avenue San Diego CA 92113

ARTISTIC engineering
AEsims.com
877.9AE.sims

View 6

Existing

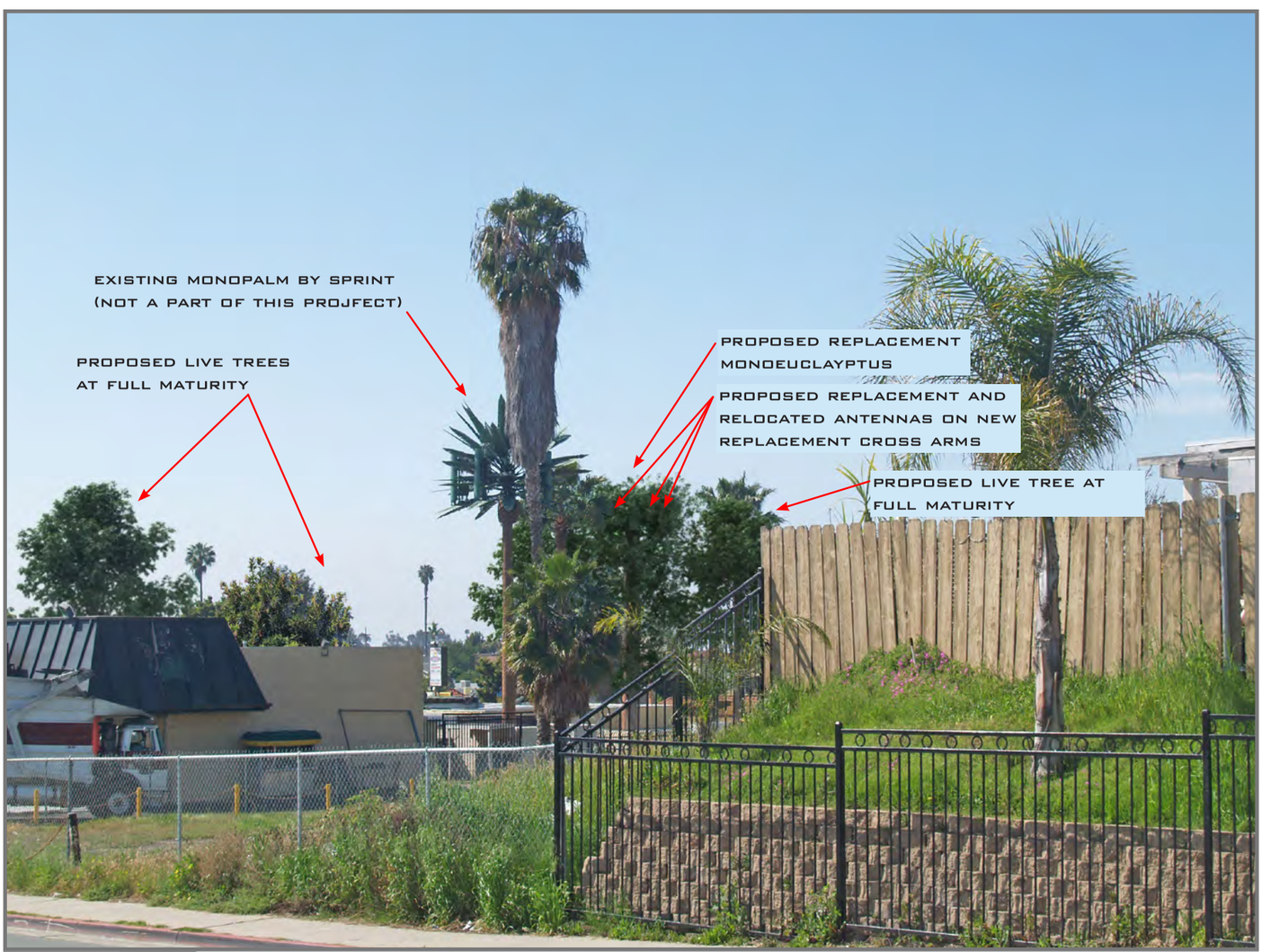


Proposed — Looking southwest from Euclid Avenue

ATTACHMENT 4

Accuracy of photo simulation based upon information provided by project applicant.

CROWN CASTLE

# 824829

## Island View Market

5080 Logan Avenue San Diego CA 92113

ARTISTIC engineering
AEsims.com
877.9AE.sims

View 7

Existing

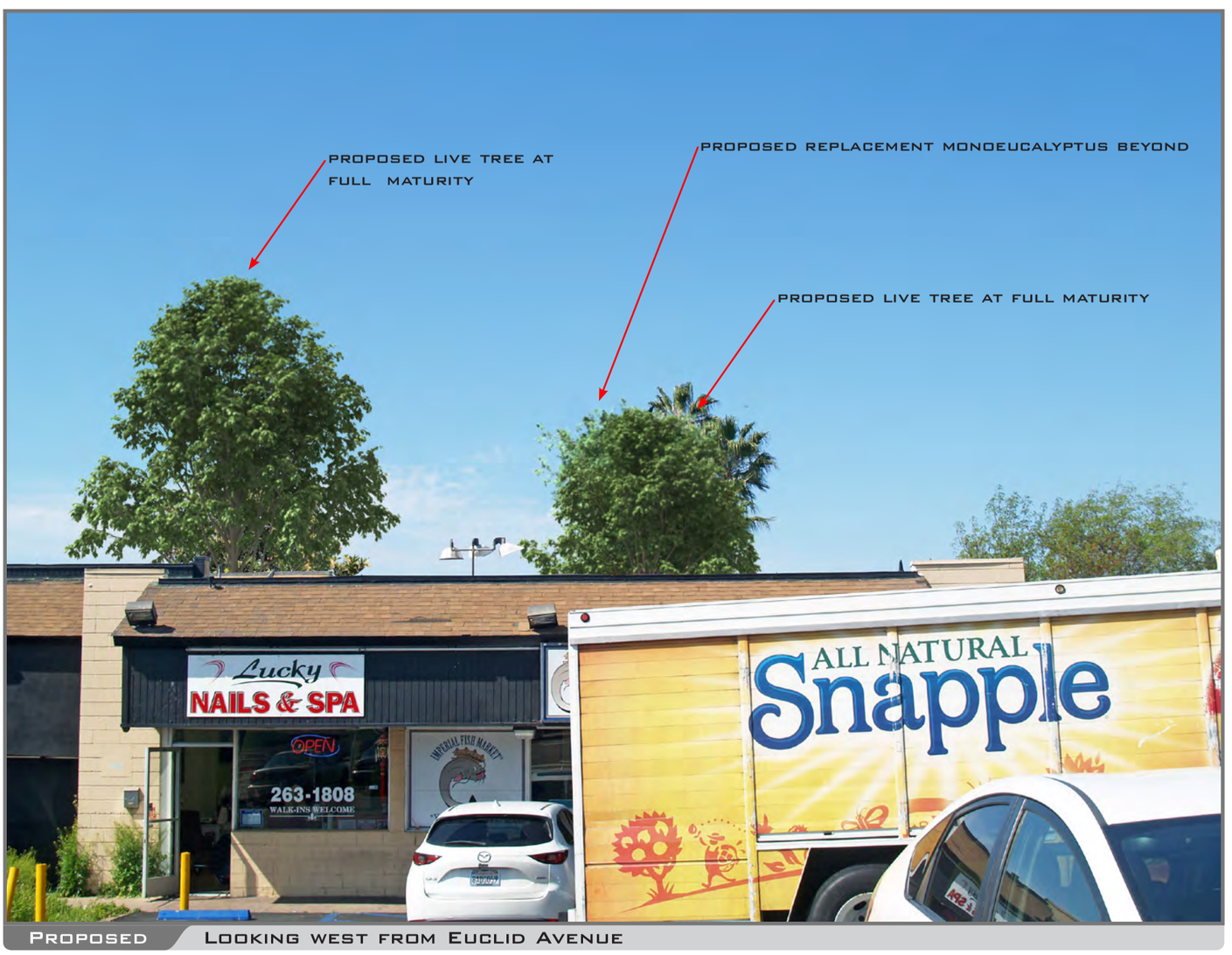


Proposed — Looking west from Euclid Avenue

ATTACHMENT 4

Accuracy of photo simulation based upon information provided by project applicant.

# SD06808A - CUP RENEWAL
## (L600/L1900/ANCHOR)
# CROWN CASTLE SITE ID: 824829
# ISLAND VIEW MARKET
# 5080 LOGAN AVE.
# SAN DIEGO, CA 92113

## SITE INFORMATION

| | |
|---|---|
| PROPERTY OWNER: | ENAS N. MERAM<br>3327 RANCHO SAN DIEGO CIRCLE,<br>EL CAJUN, CA 92019<br>CONTACT: DANNY SALMO<br>PH: (619) 815-4151 |
| APPLICANT:<br>ADDRESS: | T-MOBILE<br>10509 VISTA SORRENTO PKWY, STE 206<br>SAN DIEGO, CA 92121 |
| LAT/LONG TYPE: | NAD-83 |
| LATITUDE: | 32° 41' 50.0" N |
| LONGITUDE: | 117° 5' 9.6" W |
| ZONING JURISDICTION: | COUNTY OF SAN DIEGO |
| ZONING CLASSIFICATION: | CN-1-3 |
| CURRENT USE: | UNMANNED TELECOMMUNICATIONS FACILITY |
| ASSESSOR'S PARCEL NO.: | 548-400-34 |
| PROPOSED USE: | UNMANNED TELECOMMUNICATIONS FACILITY |
| TYPE OF CONSTRUCTION: | V-B |
| OCCUPANCY GROUP: | U-2 |

## PROJECT TEAM

CLIENT REPRESENTATIVE:
CORE DEVELOPMENT SERVICES
210 W BIRCH STREET, SUITE 201
BREA, CA 92821
CONTACT: ALEXANDER LEW
PHONE: (714) 401-2241

ENGINEER:
M SQUARED WIRELESS
1387 CALLE AVANZADO
SAN CLEMENTE, CA 92673
CONTACT: MICHAEL MONTELLO
PHONE: (619) 997-4012

PROJECT MANAGER:
CROWN CASTLE
200 SPECTRUM CENTER DR, SUITE 1700
IRVINE, CA 92618
CONTACT: JIM LEE
PHONE: (714) 642-8036
EMAIL: jim.lee@crowncastle.com

CONSTRUCTION MANAGER:
CROWN CASTLE
200 SPECTRUM CENTER DR, SUITE 1700
IRVINE, CA 92618
CONTACT: GARNER MORALES
PHONE: (714) 293-7926

A & E SPECIALIST:
CROWN CASTLE
200 SPECTRUM CENTER DR, SUITE 1700
IRVINE, CA 92618
CONTACT:
PHONE:

REAL ESTATE SPECIALIST:
CROWN CASTLE
200 SPECTRUM CENTER DR, SUITE 1700
IRVINE, CA 92618
CONTACT:
PHONE:

## VICINITY MAP

## DRIVING DIRECTIONS

DIRECTIONS FROM SAN DIEGO INTERNATIONAL AIRPORT:

1. HEAD NORTHWEST ON AIRPORT TERMINAL RD
2. USE RIGHT LANES TO TAKE THE RAMP ONTO I-5/DOWNTOWN
3. MERGE ONTO N HARBOR DR
4. TURN LEFT ONTO W GRAPE ST
5. USE RIGHT LANES TO TAKE INTERSTATE 5 S RAMP
6. TAKE EXIT 15B FOR CA-94 E
7. MERGE ONTO I-805 S
8. TAKE EXIT 11 FOR PALM AVE
9. TURN LEFT ONTO S 47TH ST
10. TURN RIGHT ONTO LOGAN AVE
11. DESTINATION WILL BE ON THE LEFT

## PROJECT DESCRIPTION

T-MOBILE PROPOSES TO MODIFY AN EXISTING WIRELESS INSTALLATION. THE SCOPE WILL CONSIST OF THE FOLLOWING:

- REMOVE (1) EXISTING PALM TREE
- REMOVE EXISTING FAUX PALM FRONDS AND FAUX 'PINEAPPLE'
- REMOVE EXISTING TRIPLE T-ARM ANTENNA MOUNTING FRAME
- REMOVE PORTIONS OF EXISTING CMU WALL ENCLOSURE
- INSTALL PROPOSED CMU WALL ENCLOSURE
- RELOCATE/ RETROFIT EXISTING CHAINLINK FENCE WITH CHAINLINK TOPPER
- RELOCATE EXISTING UTILITY PANELS
- RELOCATE EXISTING METAL ACCESS DOOR
- INSTALL PROPOSED MONOEUCALYPTUS BRANCHES
- INSTALL PROPOSED MONOEUCALYPTUS FOLIAGE SLEEVES FOR ALL ANTENNAS
- REMOVE (6) EXISTING T-MOBILE "DUMMY" PANEL ANTENNAS
- REMOVE (3) EXISTING T-MOBILE TMAs
- RELOCATE (6) EXISTING T-MOBILE PANEL ANTENNAS
- INSTALL PROPOSED TRIPLE T-ARM ANTENNA MOUNTING SYSTEM
- INSTALL (3) PROPOSED T-MOBILE AIR6449 B41 PANEL ANTENNAS
- INSTALL (3) PROPOSED T-MOBILE RFS APXVAARR18_43-U-NA20 PANEL ANTENNAS
- INSTALL (3) PROPOSED T-MOBILE RADIO 4449 B71/B85 @ ANTENNA LEVEL
- INSTALL (3) PROPOSED T-MOBILE RADIO 4424 B25 @ ANTENNA LEVEL
- INSTALL (3) PROPOSED T-MOBILE 6X12 HYBRID CABLE SYSTEM (HCS)
- INSTALL (4) CANOPY TREES WITH TREE WELL

## GENERAL NOTES

THE FACILITY IS UNMANNED AND NOT FOR HUMAN HABITATION. HANDICAPPED ACCESS REQUIREMENTS ARE NOT REQUIRED IN ACCORDANCE WITH THE 2019 CALIFORNIA BUILDING CODE. A TECHNICIAN WILL VISIT THE SITE AS REQUIRED FOR ROUTINE MAINTENANCE. THE PROJECT WILL NOT RESULT IN ANY SIGNIFICANT DISTURBANCE OR EFFECT ON DRAINAGE; NO SANITARY SEWER SERVICE, POTABLE WATER, OR TRASH DISPOSAL IS REQUIRED AND NO COMMERCIAL SIGNAGE IS PROPOSED.

## ENGINEERING

ALL WORK AND MATERIALS SHALL BE PERFORMED AND INSTALLED IN ACCORDANCE WITH THE CURRENT EDITIONS OF THE FOLLOWING CODES AS ADOPTED BY THE LOCAL GOVERNING AUTHORITIES.

- 2019 BUILDING CODE
- CITY/COUNTY ORDINANCES
- BUILDING OFFICIALS & CODE ADMINISTRATORS (BOCA)
- 2019 MECHANICAL CODE
- 2019 FIRE CODE
- 2019 PLUMBING CODE
- 2019 ELECTRICAL CODE
- LOCAL BUILDING CODE

## DO NOT SCALE DRAWINGS

SUBCONTRACTOR SHALL VERIFY ALL PLANS, EXISTING DIMENSIONS & FIELD CONDITIONS ON THE JOB SITE & SHALL IMMEDIATELY NOTIFY THE ENGINEER IN WRITING OF ANY DISCREPANCIES BEFORE PROCEEDING WITH THE WORK OR BE RESPONSIBLE FOR SAME.

DIGALERT
Call Toll Free
811/1-800-422-4133
3 Working Days Before You Dig
UNDERGROUND SERVICE ALERT OF SOUTHERN CALIFORNIA

## ZONING DRAWINGS

IF USING 11"X17" PLOT, DRAWINGS WILL BE HALF SCALE

## DRAWING INDEX

| SHEET NO: | SHEET TITLE | SHEET NO: | SHEET TITLE |
|---|---|---|---|
| T-1 | TITLE SHEET | | |
| L-1 | LANDSCAPING PLAN | | |
| A-1 | SITE PLAN & ENLARGED SITE PLAN | | |
| A-2 | EQUIPMENT LAYOUTS | | |
| A-3 | ANTENNA LAYOUTS | | |
| A-4 | ELEVATIONS | | |
| A-5 | ELEVATIONS | | |
| RF-1 | ELEVATION VIEW - SCI | | |
| RF-2 | DETAIL VIEW - SCI | | |
| RF-3 | PLAN AND DETAIL VIEW - SCI | | |
| RF-4 | EPA VALUES - SCI | | |
| RF-5 | 3D RENDER - PLAN AND ELEVATION VIEW - SCI | | |
| RF-6 | 3D RENDER - PERSPECTIVE & ISOMETRIC VIEW - SCI | | |

## APPROVALS

THE FOLLOWING PARTIES HEREBY APPROVE AND ACCEPT THESE DOCUMENTS & AUTHORIZE THE SUBCONTRACTOR TO PROCEED WITH THE CONSTRUCTION DESCRIBED HEREIN. ALL DOCUMENTS ARE SUBJECT TO REVIEW BY THE LOCAL BUILDING DEPARTMENT & MAY IMPOSE CHANGES OR MODIFICATIONS.

T-MOBILE RF ENGINEER: _____ DATE: _____

T-MOBILE OPERATIONS: _____ DATE: _____

SITE ACQUISITION: _____ DATE: _____

CONSTRUCTION MANAGER: _____ DATE: _____

PROPERTY OWNER: _____ DATE: _____

ZONING: _____ DATE: _____

PROJECT MANAGER: _____ DATE: _____

T-Mobile
10509 VISTA SORRENTO PKWY, STE 206
SAN DIEGO, CA 92121

CROWN CASTLE
200 SPECTRUM CENTER DR, SUITE 1700
IRVINE, CA 92618

M SQUARED WIRELESS
1387 CALLE AVANZADO
SAN CLEMENTE CA 92673 (949) 391-6824

DRAWN BY: BM

CHECKED BY: MM

| REV | DATE | DESCRIPTION | BY |
|---|---|---|---|
| 5 | 08/07/2020 | 100% ZD'S - REVISED - JX | SD |
| 4 | 07/20/2020 | 100% ZD'S - REVISED - JX | RDL |
| 3 | 07/06/2020 | 100% ZD'S - REVISED - JX | RDL |
| 2 | 05/29/2020 | 100% ZD'S - REVISED - JX | RN |
| 1 | 05/08/2020 | 100% ZD'S - REVISED | RDL |
| 0 | 04/24/2020 | 100% ZD'S FOR SUBMITTAL | RDL |
| A | 04/20/2020 | 90% ZD'S FOR REVIEW | RDL |

IT IS A VIOLATION OF LAW FOR ANY PERSON, UNLESS THEY ARE ACTING UNDER THE DIRECTION OF A LICENSED PROFESSIONAL ENGINEER, TO ALTER THIS DOCUMENT.

SD06808A - CUP RENEWAL
CROWN CASTLE SITE ID: 824829
ISLAND VIEW MARKET
5080 LOGAN AVE.
SAN DIEGO, CA 92113
MONO-EUCALYPTUS

SHEET TITLE
**TITLE SHEET**

SHEET NUMBER
**T-1**

1. EXISTING BUILDING
2. NOT USED
3. T-MOBILE EQUIPMENT AND ANTENNA AREA
4. EXISTING PARKING LOT
5. EXISTING VACANT LAND
6. EXISTING RESIDENTIAL AREA
7. NOT USED
8. NOT USED
9. EXISTING BOLLARDS, TYP.
10. EXISTING UTILITIES, STREETLIGHT TYP.
11. EXISTING SIDEWALK, DRIVEWAY CUTOUTS TYP.

## KEYNOTES:

## PLANTING LEGEND

### TREES

| SYMBOL | KEY | BOTANICAL/ COMMON NAME | REMARKS | SIZE | QTY. | DTL/SHT | MATURE (20YR.) HxW | MAINTAIN TO: HxW | WUCOLS IV REG.-RTG. |
|---|---|---|---|---|---|---|---|---|---|
| | ARB MAR | ARBUTUS M. "MARINA" MARINA STRAWBERRY TREE | HIGH BRANCH STANDARD | 36" BOX (4) | 1 | | 25'x25' | SAME | 3-L |
| | LOP CON | LOPHOSTEMON CONFERTUS BRISBANE BOX | ONLY PRUNE TO REMOVE DEFECTS | 36" box (4) | 3 | | 40'x20' | SAME | 3-M |

MAINTAIN 3" MIN. DEEP MULCH TO THE DRIPLINE OF THE TREES THROUGHOUT THE LIFE OF THE PLANTINGS. - USE PARTIALLY COMPOSTED, NITROGEN STABILIZED TREE TRIMMINGS, 0-2 INCH SCREENED COMPOST OR PRE- APPROVED EQUAL.

## CITY REQUIRED NOTES

"ALL LANDSCAPE AND IRRIGATION SHALL CONFORM TO THE STANDARDS OF THE CITY-WIDE LANDSCAPE REGULATIONS AND THE CITY OF SAN DIEGO LAND DEVELOPMENT MANUAL LANDSCAPE STANDARDS AND ALL OTHER LANDSCAPE RELATED CITY AND REGIONAL STANDARDS"

"A MINIMUM ROOT ZONE OF 40SF IN AREA SHALL BE PROVIDED FOR ALL TREES. THE MINIMUM DIMENSION FOR THIS AREA SHALL BE 5 FEET, PER LDC 142.0403(B)(5)."

"EXISTING TREES TO REMAIN ON SITE WITHIN THE AREA OF WORK WILL BE PROTECTED IN PLACE. THE FOLLOWING PROTECTION MEASURES WILL BE PROVIDED:

1. A BRIGHT YELLOW OR ORANGE TEMPORARY FENCE WILL BE PLACED AROUND EXISTING TREES AT THE DRIP LINE.
2. STOCKPILING, TOPSOIL DISTURBANCE, VEHICLE USE, AND MATERIAL STORAGE OF ANY KIND IS PROHIBITED WITHIN THE DRIP LINE.
3. A TREE WATERING SCHEDULE WILL BE MAINTAINED AND DOCUMENTED DURING CONSTRUCTION.
4. ALL DAMAGED TREES WILL BE REPLACED WITH ONE OF EQUAL OR GREATER SIZE.

"MULCH: ALL REQUIRED PLANTING AREAS AND ALL EXPOSED SOIL AREAS WITHOUT VEGETATION SHALL BE COVERED WITH MULCH TO A MINIMUM DEPTH OF 2 INCHES, EXCLUDING SLOPES REQUIRING REVEGETATION PER SDMC 142.0411."

"TREE ROOT BARRIERS SHALL BE INSTALLED WHERE TREES ARE PLACED WITHIN 5 FEET OF PUBLIC IMPROVEMENTS INCLUDING WALKS, CURBS, OR STREET PAVEMENTS OR WHERE NEW PUBLIC IMPROVEMENTS ARE PLACED ADJACENT TO EXISTING TREES. THE ROOT BARRIER WILL NOT WRAP AROUND THE ROOT BALL." PLEASE CLEARLY IDENTIFY THE INSTALLATION OF ROOT BARRIERS IN THE LOCATIONS SUBJECT TO THESE CONDITIONS PER 142.0403(B). (NEW ISSUE)

MAINTENANCE:
"ALL REQUIRED LANDSCAPE AREAS SHALL BE MAINTAINED BY:
**PERMITTEE or OWNER/PERMITTEE**

LANDSCAPE & IRRIGATION AREAS IN THE PUBLIC R.O.W. SHALL BE MAINTAINED BY:
**PERMITTEE or OWNER/PERMITTEE**

THE LANDSCAPE AREAS SHALL BE MAINTAINED FREE OF DEBRIS AND LITTER AND ALL PLANT MATERIAL SHALL BE MAINTAINED IN A HEALTHY GROWING CONDITION.DISEASED OR DEAD PLANT MATERIAL SHALL BE SATISFACTORILY TREATED OR REPLACED PER THE CONDITIONS OF THE PERMIT."

"IRRIGATION: AN AUTOMATIC, ELECTRICALLY CONTROLLED IRRIGATION SYSTEM SHALL BE PROVIDED AS REQUIRED FOR PROPER IRRIGATION, DEVELOPMENT, AND MAINTENANCE OF THE VEGETATION IN A HEALTHY, DISEASE-RESISTANT CONDITION. THE DESIGN OF THE SYSTEM SHALL PROVIDE ADEQUATE SUPPORT FOR THE VEGETATION SELECTED."

IRRIGATION TYPE
THE IRRIGATION SYSTEM SHALL BE AUTOMATICALLY CONTROLLED BUBBLER SYSTEM WITH AN AUTOMATIC RAIN SHUT-OFF DEVICE.

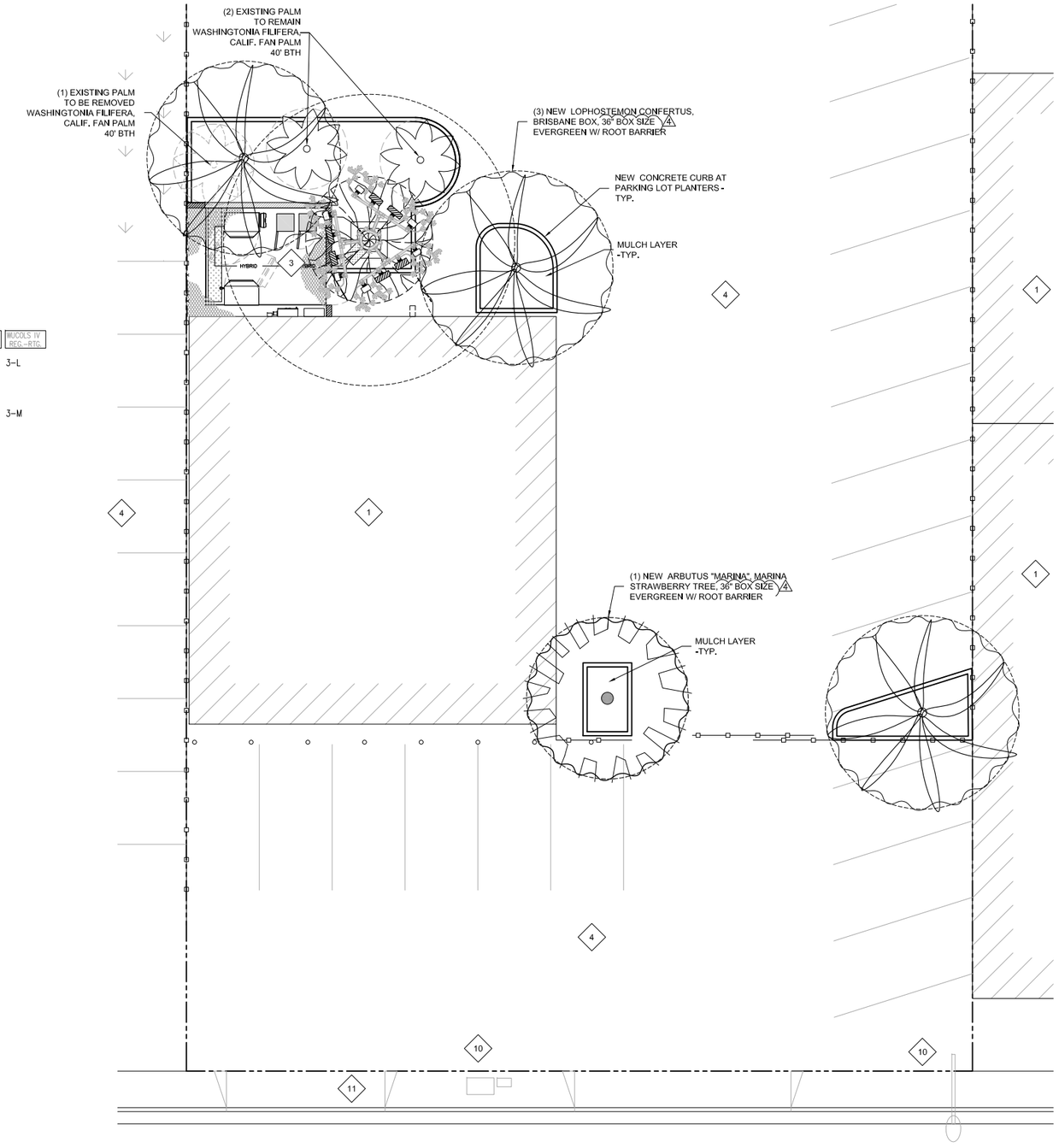


T-Mobile
10509 VISTA SORRENTO PKWY, STE 206
SAN DIEGO, CA 92121

CROWN CASTLE
200 SPECTRUM CENTER DR, SUITE 1700
IRVINE, CA 92618

M SQUARED WIRELESS
1387 CALLE AVANZADO
SAN CLEMENTE CA 92673 (949) 391-6824

DRAWN BY: ##
CHECKED BY: MM

| REV | DATE | DESCRIPTION | BY |
|---|---|---|---|
| 4 | 07/20/2020 | 100% ZD'S - REVISED - JX | RDL |
| 3 | 07/06/2020 | 100% ZD'S - REVISED - JX | RDL |
| 2 | 05/29/2020 | 100% ZD'S - REVISED - JX | RN |
| 1 | 05/08/2020 | 100% ZD'S - REVISED | RDL |
| 0 | 04/24/2020 | 100% ZD'S FOR SUBMITTAL | RDL |
| A | 04/20/2020 | 90% ZD'S FOR REVIEW | RDL |

DMLA
Landscape Architecture
dmlaonline.com (949)388-3369

IT IS A VIOLATION OF LAW FOR ANY PERSON, UNLESS THEY ARE ACTING UNDER THE DIRECTION OF A LICENSED PROFESSIONAL ENGINEER, TO ALTER THIS DOCUMENT.

SD06808A - CUP RENEWAL
CROWN CASTLE SITE ID: 824829
ISLAND VIEW MARKET
5080 LOGAN AVE.
SAN DIEGO, CA 92113
MONO-EUCALYPTUS

SHEET TITLE
**PLANTING PLAN**

SHEET NUMBER
**L-1**

**PLANTING PLAN**

24"x36" SCALE: 1/8" = 1'-0"
11"x17" SCALE: 1/16"= 1'-0"
0" 4' 8' 16'

1. EXISTING BUILDING
2. FOR ENLARGED SITE PLAN SEE: 2 / -
3. FOR T-MOBILE EQUIPMENT AND ANTENNA AREA, SEE 1/A-2 1/A-3
4. EXISTING PARKING LOT
5. EXISTING VACANT LAND
6. EXISTING RESIDENTIAL AREA
7. EXISTING PALM TREES **TO REMAIN:** (2) TOTAL.
8. EXISTING TREE, TYP.
9. EXISTING BOLLARDS, TYP.
10. **PROPOSED LOPHOSTEMON CONFERTUS, BRISBANE BOX, 36" BOX SIZE, EVERGREEN; (3 TOTAL)** 4
11. **PROPOSED TREE WELLS WITH CONCRETE CURB, TYP.** 4
12. **PROPOSED ARBUTUS "MARINA" MARINA STRAWBERRY TREE,(36" BOX SIZE, EVERGREEN; (1 TOTAL)** 4

CN-1-3 REQUIRED SETBACKS:

FRONT: MIN 0'; MAX 10'
SIDE: MIN 10'; OPT 0'
STREET SIDE: MIN 0'; MAX10'
REAR: 10'

## KEYNOTES:

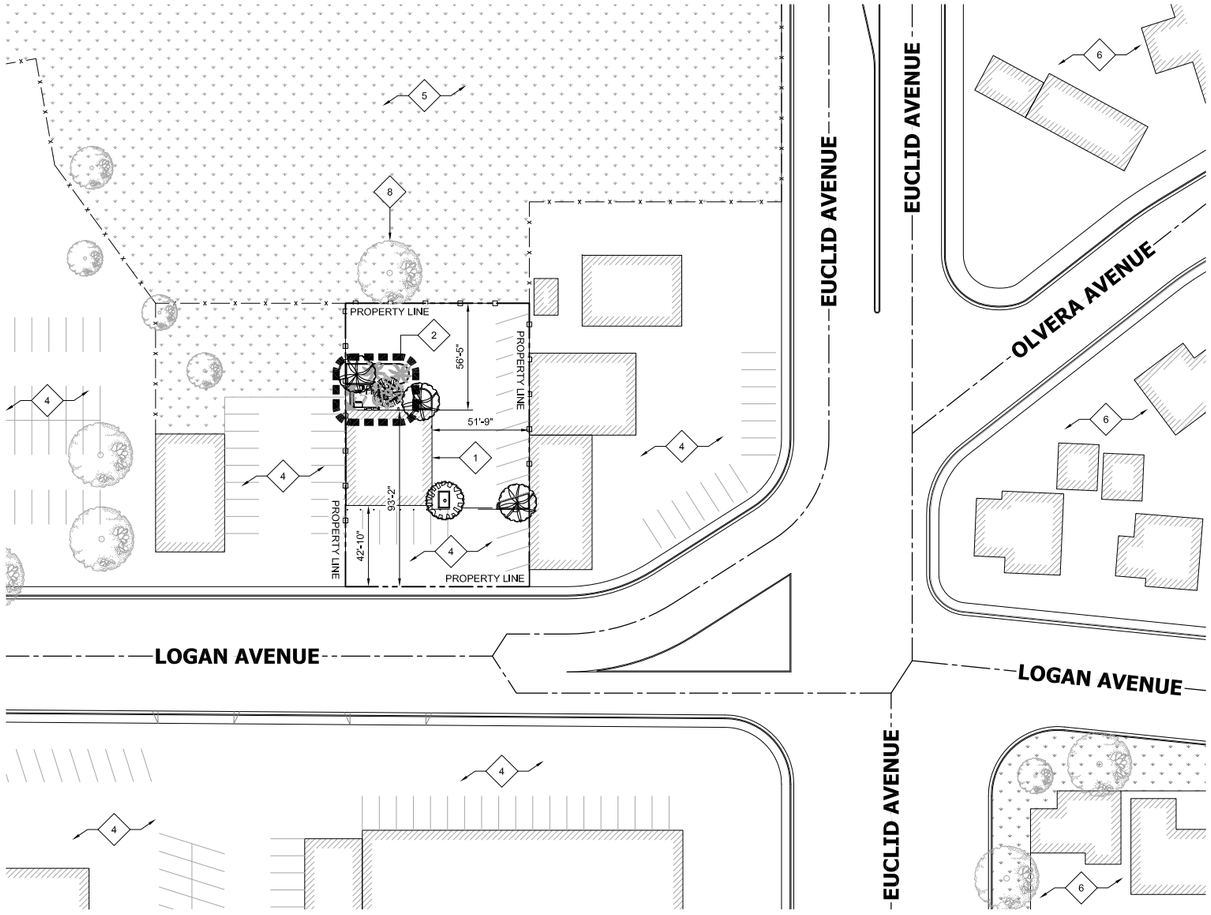


NOTES:

1. THE WIRELESS COMMUNICATION FACILITY COMPLIES WITH FEDERAL STANDARDS FOR RADIO FREQUENCY IN ACCORDANCE WITH THE TELECOMMUNICATION ACT OF 1996 AND SUBSEQUENT AMENDMENTS AND ANY OTHER REQUIREMENTS IMPOSED BY STATE OR FEDERAL REGULATORY AGENCIES.
2. NO EXISTING PARKING STALLS ARE BEING ADDED OR REMOVED AS PART OF THE PROPOSED INSTALLATION.
3. THESE DRAWINGS WERE PRODUCED WITHOUT THE BENEFIT OF A CURRENT LAND SURVEY. ALL PROPERTY LINES, EASEMENTS, SETBACKS, AND EXISTING CONDITIONS ARE APPROXIMATE AND SHALL BE VERIFIED PRIOR TO START OF CONSTRUCTION.

DISCLAIMER:

THIS SET OF DRAWINGS WAS PREPARED UTILIZING INFORMATION OBTAINED FROM PUBLIC DOCUMENTS MADE AVAILABLE ON JURISDICTION WEBSITE. M SQUARED WIRELESS CANNOT GUARANTEE THE ACCURACY OF THE DATA AND INFORMATION DEPICTED AND HEREBY EXPRESSLY DISCLAIMS ANY RESPONSIBILITY FOR THE TRUTH, VALIDITY, INVALIDITY, ACCURACY, INACCURACY OF ANY SAID DATA AND INFORMATION. THE PARCEL LINES ON MAPS ARE FOR ILLUSTRATION PURPOSES ONLY AND ARE NOT INTENDED TO BE USED AS A SURVEY PRODUCT. USER ACCEPTS RESPONSIBILITY FOR THE UNAUTHORIZED USE OR TRANSMISSION OF ANY SUCH DATA OR INFORMATION IN ITS ACTUAL OR ALTERED FORM.

## SITE PLAN

24"x36" SCALE: 1" = 40'-0"
11"x17" SCALE: 1" = 80'-0"
0" 20' 40' 80'

1

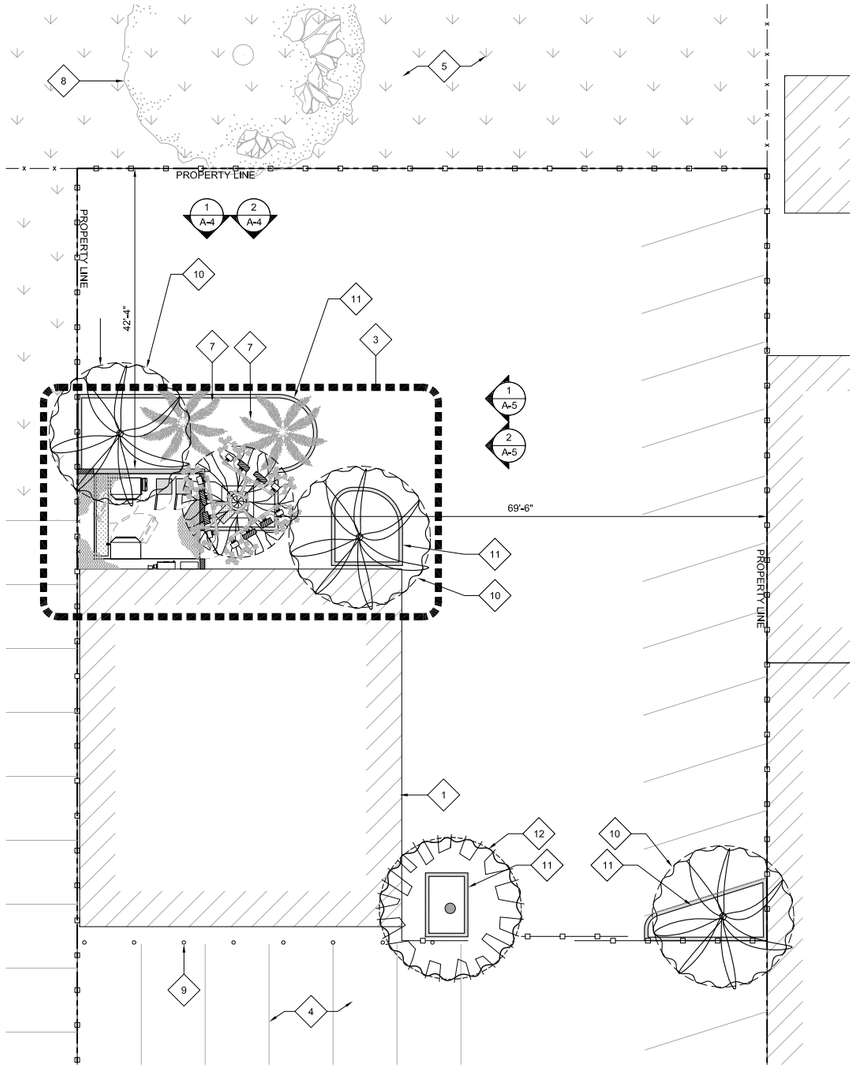


## ENLARGED SITE PLAN

24"x36" SCALE: 3/32" = 1'-0"
11"x17" SCALE: 3/64" = 1'-0"
0" 4' 8' 16'

2

T-Mobile
10509 VISTA SORRENTO PKWY, STE 206
SAN DIEGO, CA 92121

CROWN CASTLE
200 SPECTRUM CENTER DR, SUITE 1700
IRVINE, CA 92618

M SQUARED WIRELESS
1387 CALLE AVANZADO
SAN CLEMENTE CA 92673 (949) 391-6824

| | |
|---|---|
| DRAWN BY: | BM |
| CHECKED BY: | MM |

| REV | DATE | DESCRIPTION | BY |
|---|---|---|---|
| | | | |
| 5 | 08/07/2020 | 100% ZD'S - REVISED - JX | SD |
| 4 | 07/20/2020 | 100% ZD'S - REVISED - JX | RDL |
| 3 | 07/06/2020 | 100% ZD'S - REVISED - JX | RDL |
| 2 | 05/29/2020 | 100% ZD'S - REVISED - JX | RN |
| 1 | 05/08/2020 | 100% ZD'S - REVISED | RDL |
| 0 | 04/24/2020 | 100% ZD'S FOR SUBMITTAL | RDL |
| A | 04/20/2020 | 90% ZD'S FOR REVIEW | RDL |

IT IS A VIOLATION OF LAW FOR ANY PERSON, UNLESS THEY ARE ACTING UNDER THE DIRECTION OF A LICENSED PROFESSIONAL ENGINEER, TO ALTER THIS DOCUMENT.

SD06808A - CUP RENEWAL
CROWN CASTLE SITE ID: 824829
ISLAND VIEW MARKET
5080 LOGAN AVE.
SAN DIEGO, CA 92113
MONO-EUCALYPTUS

SHEET TITLE
**SITE PLAN AND ENLARGED SITE PLAN**

SHEET NUMBER
**A-1**

## KEYNOTES:

1. EXISTING BUILDING
2. EXISTING MONOPOLE BASE, **SEE NOTES 1 AND 2**
3. EXISTING CHAIN LINK FENCE WITH CHAINLINK TOPPER **TO BE RELOCATED AND RETROFITTED**
3A. EXISTING CHAIN LINK FENCE WITH CHAINLINK TOPPER, **RELOCATED AND RETROFITTED**
4. EXISTING T-MOBILE CABLE SHROUD
5. EXISTING T-MOBILE EQUIPMENT CONCRETE PAD
6. EXISTING OUTDOOR T-MOBILE CMU WALL ENCLOSURE **(SOME PORTION TO BE REMOVED, SHOWN DASHED)**
6A. **REMAINING PORTION** OF EXISTING OUTDOOR T-MOBILE CMU WALL ENCLOSURE
6B. **PROPOSED T-MOBILE CMU WALL, HEIGHT TO MATCH EXISTING**
7. EXISTING T-MOBILE EQUIPMENT ENCLOSURE ACCESS DOOR **TO BE RELOCATED**
7A. EXISTING T-MOBILE EQUIPMENT ENCLOSURE ACCESS DOOR, **RELOCATED**
8. EXISTING T-MOBILE CABLE TRAY AT GRADE
9. EXISTING T-MOBILE GPS ANTENNA; (1) TOTAL
10. EXISTING T-MOBILE EQUIPMENT CABINET; (2) TOTAL
11. EXISTING T-MOBILE CIENA BOX
12. EXISTING T-MOBILE AC SWITCH **TO BE RELOCATED**
12A. EXISTING T-MOBILE AC SWITCH **RELOCATED**
13. EXISTING T-MOBILE PPC, **TO BE RELOCATED**
13A. EXISTING T-MOBILE PPC, **RELOCATED**
14. EXISTING T-MOBILE TELCO PANEL **TO BE RELOCATED**
14A. EXISTING T-MOBILE TELCO PANEL, **RELOCATED**
15. EXISTING FENCE WITH METAL CLADDING
16. **PROPOSED T-MOBILE 6160 ENCLOSURE WITH: (4) PROPOSED BB6630 (4) PROPOSED XMUs WITHIN**
17. **PROPOSED T-MOBILE B160 BATTERY CABINET**
18. **PROPOSED T-MOBILE 6X12 6AWG HYBRID CABLES; (3) TOTAL**
19. **OUTLINE OF PROPOSED T-MOBILE FAUX EUCALYPTUS BRANCHES ABOVE**
20. **PROPOSED LOPHOSTEMON CONFERTUS, BRISBANE BOX, 36" BOX SIZE, EVERGREEN; (3 TOTAL) (2) SHOWN, PLEASE REFER TO ENLARGED SITE PLAN FOR LOCATION OF THE OTHER (2) TREES.**
21. **PROPOSED TREE WELLS WITH CONCRETE CURB, TYP.**
22. EXISTING PALM TREES **TO BE REMOVED;** (1) TOTAL.
23. EXISTING PALM TREES **TO REMAIN;** (2) TOTAL.

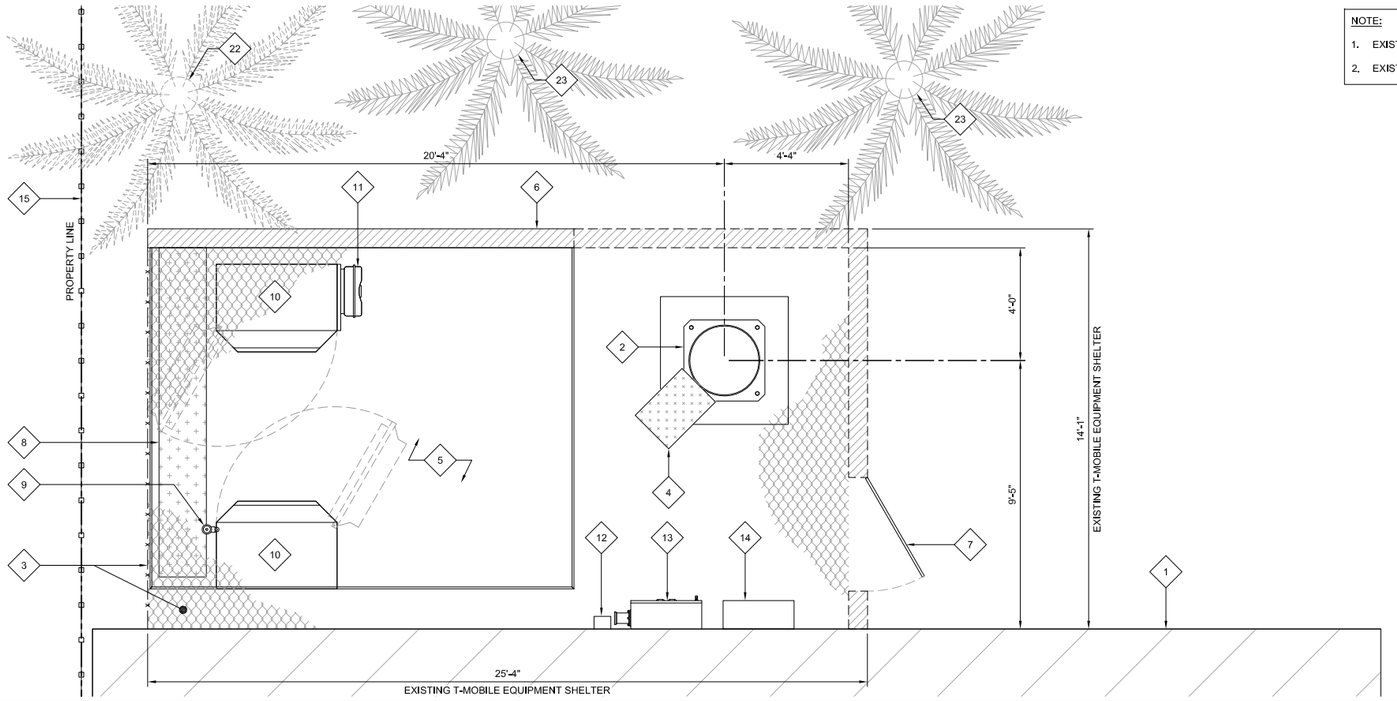


NOTE:
1. EXISTING T-MOBILE PANEL ANTENNAS NOT SHOWN FOR CLARITY.
2. EXISTING PALM FRONDS NOT SHOWN FOR CLARITY.

## EXISTING EQUIPMENT LAYOUT

24"x36" SCALE: 3/8" = 1'-0"
11"x17" SCALE: 3/16" = 1'-0"
0" 1' 2' 4'

1

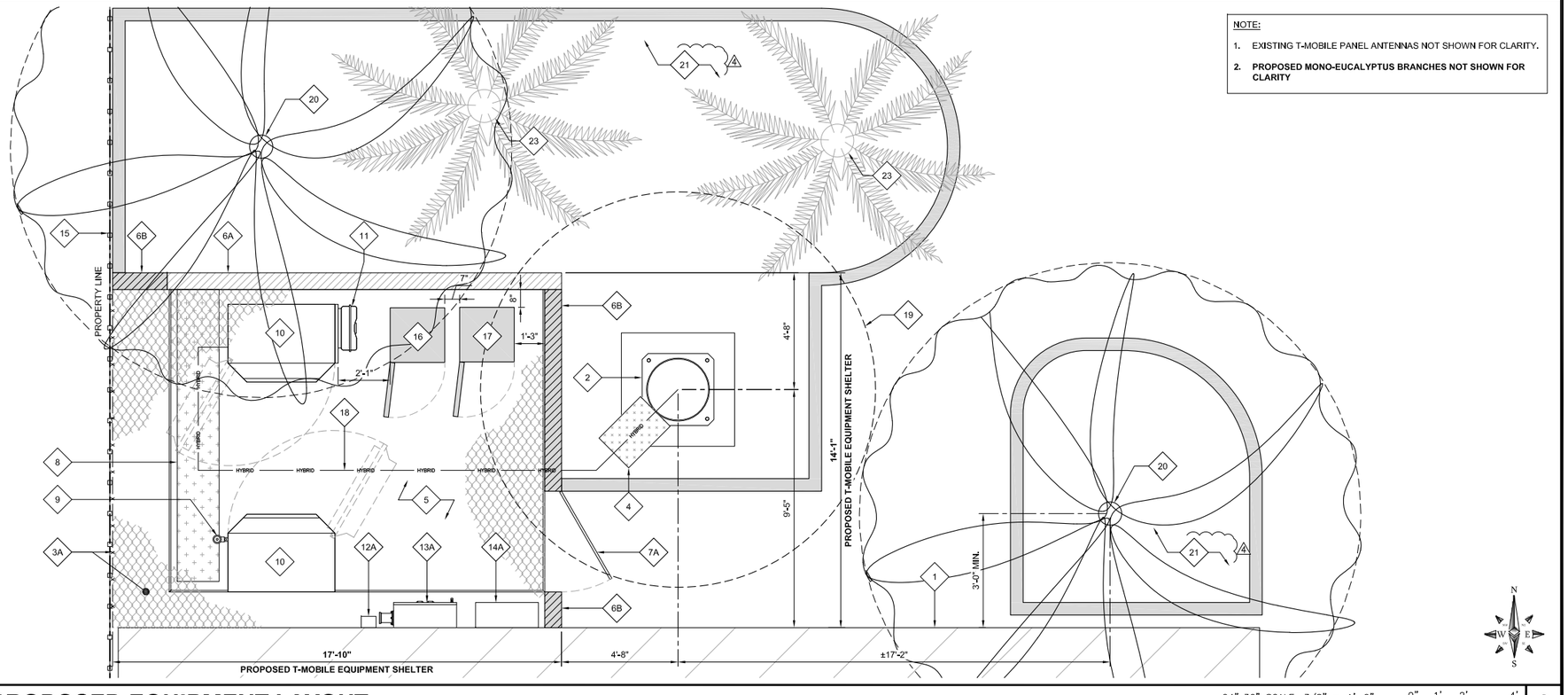


NOTE:
1. EXISTING T-MOBILE PANEL ANTENNAS NOT SHOWN FOR CLARITY.
2. **PROPOSED MONO-EUCALYPTUS BRANCHES NOT SHOWN FOR CLARITY**

## PROPOSED EQUIPMENT LAYOUT

24"x36" SCALE: 3/8" = 1'-0"
11"x17" SCALE: 3/16" = 1'-0"
0" 1' 2' 4'

2

T-Mobile
10509 VISTA SORRENTO PKWY, STE 206
SAN DIEGO, CA 92121

CROWN CASTLE
200 SPECTRUM CENTER DR, SUITE 1700
IRVINE, CA 92618

M SQUARED WIRELESS
1387 CALLE AVANZADO
SAN CLEMENTE CA 92673 (949) 391-6824

| | |
|---|---|
| DRAWN BY: | BM |
| CHECKED BY: | MM |

| REV | DATE | DESCRIPTION | BY |
|---|---|---|---|
| 5 | 08/07/2020 | 100% ZD'S - REVISED - JX | SD |
| 4 | 07/20/2020 | 100% ZD'S - REVISED - JX | RDL |
| 3 | 07/06/2020 | 100% ZD'S - REVISED - JX | RDL |
| 2 | 05/29/2020 | 100% ZD'S - REVISED - JX | RN |
| 1 | 05/08/2020 | 100% ZD'S - REVISED | RDL |
| 0 | 04/24/2020 | 100% ZD'S FOR SUBMITTAL | RDL |
| A | 04/20/2020 | 90% ZD'S FOR REVIEW | RDL |

IT IS A VIOLATION OF LAW FOR ANY PERSON, UNLESS THEY ARE ACTING UNDER THE DIRECTION OF A LICENSED PROFESSIONAL ENGINEER, TO ALTER THIS DOCUMENT.

SD06808A - CUP RENEWAL
CROWN CASTLE SITE ID: 824829
ISLAND VIEW MARKET
5080 LOGAN AVE.
SAN DIEGO, CA 92113
MONO-EUCALYPTUS

SHEET TITLE
**EQUIPMENT LAYOUT**

SHEET NUMBER
**A-2**

| | | FINAL OPTIMAL ANTENNA REQUIREMENTS (VERIFY WITH CURRENT RFDS) | | | ANTENNA MAKE AND MODEL | | RAD CENTER | | AZIMUTH | | TRANSMISSION LINE | | |
|---|---|---|---|---|---|---|---|---|---|---|---|---|---|
| | | ANTENNA POSITION | TECHNOLOGY EXISTING | TECHNOLOGY FINAL | ANTENNA COUNT | EXISTING | FINAL | EXISTING | FINAL | EXISTING | FINAL | CABLE LENGTH | QTY/FEEDER TYPE EXISTING | QTY/FEEDER TYPE FINAL |
| SECTOR A | 1 | U1900, G1900 | U1900, G1900 | 1 | ERICSSON AIR21 B2A/B4P | ERICSSON AIR21 B2A/B4P | 42'-0" | 42'-0" | 40° | 40° | ±92' ±100' ±100' | (2) 7/8" COAX (1) 9X18 HCS * - | (2) 7/8" COAX (1) 9X18 HCS * **(3) 6X12 HCS *** |
| | 2 | - | L700, L600, N600, L1900 | **1** | DUMMY | **RFS APXVAARR18_43-U-NA20** | 42'-0" | **42'-0"** | - | **40°** | | | |
| | 3 | - | **L2500, N2500** | **1** | DUMMY | **4 ERICSSON AIR6449 B41** | 42'-0" | **42'-0"** | - | **40°** | | | |
| | 4 | L2100, L1900 | L2100 | 1 | ERICSSON AIR32 B4A B20 | ERICSSON-AIR32 B4A B20 | 42'-0" | 42'-0" | 40° | 40° | | | |
| SECTOR B | 1 | U1900, G1900 | U1900, G1900 | 1 | ERICSSON AIR21 B2A/B4P | ERICSSON AIR21 B2A/B4P | 42'-0" | 42'-0" | 150° | 150° | ±92' | (2) 7/8" COAX | (2) 7/8" COAX |
| | 2 | - | L700, L600, N600, L1900 | **1** | DUMMY | **RFS APXVAARR18_43-U-NA20** | 42'-0" | **42'-0"** | - | **150°** | | | |
| | 3 | - | **L2500, N2500** | **1** | DUMMY | **4 ERICSSON AIR6449 B41** | 42'-0" | **42'-0"** | - | **150°** | | | |
| | 4 | L2100, L1900 | L2100 | 1 | ERICSSON AIR32 B4A B20 | ERICSSON-AIR32 B4A B20 | 42'-0" | 42'-0" | 150° | 150° | | | |
| SECTOR C | 1 | U1900, G1900 | U1900, G1900 | 1 | ERICSSON AIR21 B2A/B4P | ERICSSON AIR21 B2A/B4P | 42'-0" | 42'-0" | 255° | 255° | ±92' | (2) 7/8" COAX | (2) 7/8" COAX |
| | 2 | - | L700, L600, N600, L1900 | **1** | DUMMY | **RFS APXVAARR18_43-U-NA20** | 42'-0" | **42'-0"** | - | **255°** | | | |
| | 3 | - | **L2500, N2500** | **1** | DUMMY | **4 ERICSSON AIR6449 B41** | 42'-0" | **42'-0"** | - | **255°** | | | |
| | 4 | L2100, L1900 | L2100 | 1 | ERICSSON AIR32 B4A B20 | ERICSSON-AIR32 B4A B20 | 42'-0" | 42'-0" | 255° | 255° | | | |
| | | | TOTAL | **12** | | | | | | | | | |

* - DENOTES SHARED ACROSS ALL SECTORS

| | | TOWER MOUNTED AMPLIFIER | | DC CABLES | |
|---|---|---|---|---|---|
| | ANTENNA POSITION | RRUS MAKE AND MODEL | RRUS COUNT | LENGTH | AWG |
| SECTOR A | 1 | - | - | - | - |
| | 2 | - | - | - | - |
| | 3 | - | - | - | - |
| | 4 | 4 - | - | - | - |
| SECTOR B | 1 | - | - | - | - |
| | 2 | - | - | - | - |
| | 3 | - | - | - | - |
| | 4 | 4 - | - | - | - |
| SECTOR C | 1 | - | - | - | - |
| | 2 | - | - | - | - |
| | 3 | - | - | - | - |
| | 4 | 4 - | - | - | - |

| | | REMOTE RADIO UNITS | | DC CABLES | |
|---|---|---|---|---|---|
| | ANTENNA POSITION | QTY / RADIO MAKE AND MODEL EXISTING | QTY / RADIO MAKE AND MODEL FINAL | LENGTH | AWG |
| SECTOR A | 1 | - | - | - | - |
| | 2 | - | **4 (1) ERICSSON 4449 B71/B85 (1) ERICSSON 4424 B25** | **±70' ±70'** | - - |
| | 3 | - | - | - | - |
| | 4 | - | - | - | - |
| SECTOR B | 1 | - | - | - | - |
| | 2 | - | **4 (1) ERICSSON 4449 B71/B85 (1) ERICSSON 4424 B25** | **±70' ±70'** | - - |
| | 3 | - | - | - | - |
| | 4 | - | - | - | - |
| SECTOR C | 1 | - | - | - | - |
| | 2 | - | **4 (1) ERICSSON 4449 B71/B85 (1) ERICSSON 4424 B25** | **±70' ±70'** | - - |
| | 3 | - | - | - | - |
| | 4 | - | - | - | - |

NOTES TO CONTRACTOR:

1. CONTRACTOR IS TO REFER TO T-MOBILE'S MOST CURRENT RADIO FREQUENCY DATA SHEET (RFDS) PRIOR TO CONSTRUCTION
2. CABLE LENGTHS WERE DETERMINED BASED ON VISUAL INSPECTION DURING SITE-WALK. CONTRACTOR TO VERIFY ACTUAL LENGTH DURING PRE-CONSTRUCTION WALK
3. CONTRACTOR TO VERIFY PORTS HAVE SUFFICIENT ROOM

NOTE:

1. EXISTING ANTENNA AZIMUTHS ARE ESTIMATED AND ARE TO BE VERIFIED BY RF.
2. PROPOSED PANEL ANTENNAS AND ALL MOUNTING HARDWARE TO BE PAINTED TO MATCH EXISTING STRUCTURE IF REQUIRED. VERIFY PAINT MANUFACTURER AND FINISH WITH OWNER.

1 EXISTING MONOPOLE **TO REMAIN**

1A EXISTING MONOPOLE **TO BE PAINTED WITH EUCALYPTUS BARK COLORS**

2 EXISTING T-MOBILE ERICSSON AIR21 B2A B4P PANEL ANTENNA **TO REMAIN AND BE RELOCATED TO PROPOSED MOUNTING SYSTEM:** (1) PER SECTOR, (3) TOTAL (6 D-1)

2A EXISTING T-MOBILE ERICSSON AIR21 B2A B4P PANEL ANTENNA **RELOCATED TO PROPOSED MOUNTING SYSTEM:** (1) PER SECTOR, (3) TOTAL (6 D-1)

3 EXISTING T-MOBILE TRIPLE T-ARM MOUNTING FRAME **TO BE REMOVED**

4 EXISTING T-MOBILE DUMMY PANEL ANTENNA **TO BE REMOVED:** (2) PER SECTOR, (6) TOTAL

5 EXISTING T-MOBILE ERICSSON AIR32 B4A B2P PANEL ANTENNA **TO REMAIN AND BE RELOCATED TO PROPOSED MOUNTING SYSTEM:** (1) PER SECTOR, (3) TOTAL (5 D-1)

5A EXISTING T-MOBILE ERICSSON AIR32 B4A B2P PANEL ANTENNA **RELOCATED TO PROPOSED MOUNTING SYSTEM:** (1) PER SECTOR, (3) TOTAL (5 D-1)

6 **PROPOSED T-MOBILE RFS APXVAARR18_43-U-NA20 PANEL ANTENNA: (1) PER SECTOR, (3) TOTAL** (2 D-1) 4

7 **PROPOSED T-MOBILE RADIO 4449 B71/B85: (1) PER SECTOR, (3) TOTAL** (3 D-1) 4

8 EXISTING T-MOBILE GENERIC TWIN STYLE 1B-AWS TMA **TO BE REMOVED:** 4 (1) PER SECTOR, (3) TOTAL

9 **PROPOSED T-MOBILE ERICSSON AIR6449 B41 PANEL ANTENNA: (1) PER SECTOR, (3) TOTAL** 4 (1 D-1) 4

10 **PROPOSED T-MOBILE ERICSSON RADIO 4424 B25: (1) PER SECTOR, (3) TOTAL** (4 D-1) 4

11 **OUTLINE OF PROPOSED T-MOBILE FAUX EUCALYPTUS BRANCHES**

12 **PROPOSED T-MOBILE FAUX EUCALYPTUS BRANCHES AT EACH EXISTING AND PROPOSED ANTENNAS, TYP.**

13 **PROPOSED T-MOBILE TRIPLE T-ARM MOUNTING SYSTEM COMPRISING OF THE FF:**
**(1) UNIVERSAL RING MOUNT**
**(3) 24" STAND-OFF ARMS**
**(3) 3 1/2"Ø O.D. X 8'-6" LONG HORIZONTAL PIPES**
**(12) 2 3/8"Ø O.D. X 7'-0" LONG VERTICAL MOUNTING PIPES WITH CROSSOVER PLATES**

## ANTENNA & EQUIPMENT SCHEDULE

NOTE:

1. EXISTING PALM FRONDS NOT SHOWN FOR CLARITY.

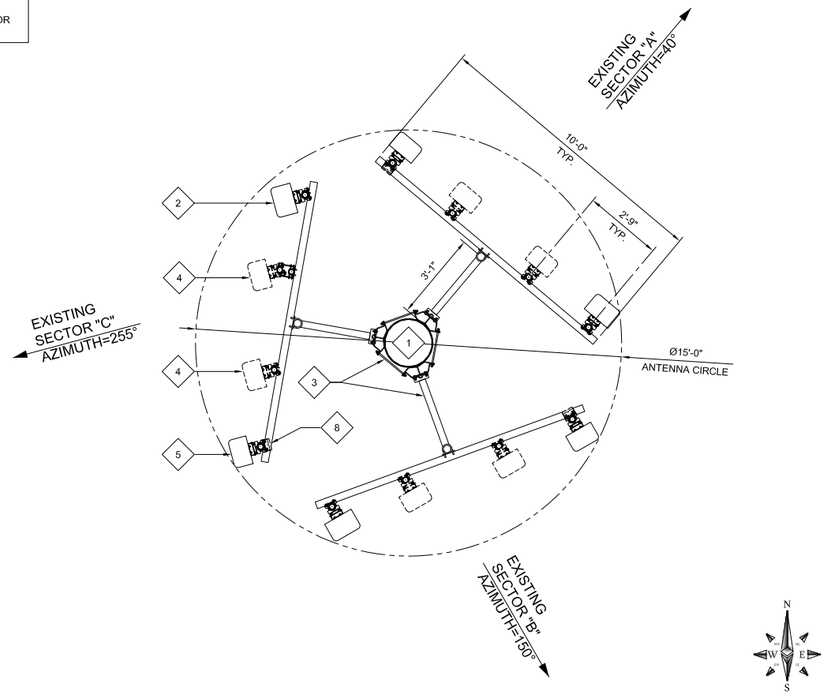


## EXISTING ANTENNA PLAN

24"x36" SCALE: 3/8" = 1'-0"
11"x17" SCALE: 3/16" = 1'-0"
0" 1' 2' 4'

1

## KEYNOTES:

NOTE:

1. PROPOSED FAUX EUCALYPTUS BRANCHES NOT SHOWN FOR CLARITY.
2. CONTRACTOR TO VERIFY APPROVED STRUCTURAL ANALYSIS PRIOR TO INSTALLATION.
3. CONTRACTOR TO VERIFY ANTENNA TECHNOLOGIES PRIOR TO REMOVAL OF ANY ANTENNAS.
4. CONTRACTOR TO SUPPLY WEATHERPROOFING FOR CONNECTIONS.
5. GENERAL CONTRACTOR TO PROVIDE MOUNTS OR ADDITIONAL HARDWARE IF REQUIRED TO SUPPORT PROPOSED ANTENNAS. ALL ANTENNAS & MOUNTING HARDWARE SHALL CONFORM TO DESIGN REQUIREMENTS PER 201 IBC/2013 CBC AND EIA/TIA-222-G STRUCTURAL STANDARDS FOR STEEL ANTENNA TOWERS AND ANTENNA SUPPORTING STRUCTURES.
6. UNUSED PIPE MOUNTS TO BE REMOVED.
7. ALL ANTENNAS TO HAVE FAUX EUCALYPTUS FOLIAGE SLEEVES.

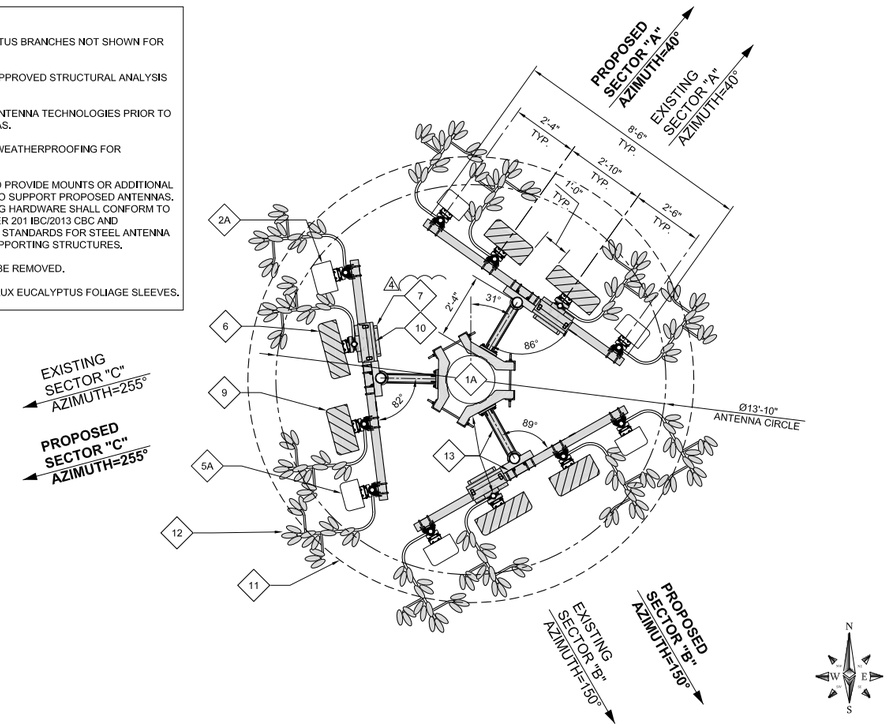


## PROPOSED ANTENNA PLAN

24"x36" SCALE: 3/8" = 1'-0"
11"x17" SCALE: 3/16" = 1'-0"
0" 1' 2' 4'

2

T-Mobile
10509 VISTA SORRENTO PKWY, STE 206
SAN DIEGO, CA 92121

CROWN CASTLE
200 SPECTRUM CENTER DR, SUITE 1700
IRVINE, CA 92618

M SQUARED WIRELESS
1387 CALLE AVANZADO
SAN CLEMENTE CA 92673 (949) 391-6824

DRAWN BY: BM

CHECKED BY: MM

| REV | DATE | DESCRIPTION | BY |
|---|---|---|---|
| | | | |
| 5 | 08/07/2020 | 100% ZD'S - REVISED - JX | SD |
| 4 | 07/20/2020 | 100% ZD'S - REVISED - JX | RDL |
| 3 | 07/06/2020 | 100% ZD'S - REVISED - JX | RDL |
| 2 | 05/29/2020 | 100% ZD'S - REVISED - JX | RN |
| 1 | 05/08/2020 | 100% ZD'S - REVISED | RDL |
| 0 | 04/24/2020 | 100% ZD'S FOR SUBMITTAL | RDL |
| A | 04/20/2020 | 90% ZD'S FOR REVIEW | RDL |

IT IS A VIOLATION OF LAW FOR ANY PERSON, UNLESS THEY ARE ACTING UNDER THE DIRECTION OF A LICENSED PROFESSIONAL ENGINEER, TO ALTER THIS DOCUMENT.

SD06808A - CUP RENEWAL
CROWN CASTLE SITE ID: 824829
ISLAND VIEW MARKET
5080 LOGAN AVE.
SAN DIEGO, CA 92113
MONO-EUCALYPTUS

SHEET TITLE

**ANTENNA LAYOUT**

SHEET NUMBER

**A-3**

1. EXISTING BUILDING, BEYOND
2. EXISTING MONOPOLE
2A. EXISTING MONOPOLE **TO BE PAINTED WITH EUCALYPTUS BARK COLORS**
3. EXISTING OUTDOOR T-MOBILE CMU WALL ENCLOSURE **(SOME PORTION TO BE REMOVED, SHOWN DASHED)**
3A. **REMAINING PORTION** OF EXISTING OUTDOOR T-MOBILE CMU WALL ENCLOSURE
3B. **PROPOSED T-MOBILE CMU WALL, HEIGHT TO MATCH EXISTING**
4. EXISTING T-MOBILE CABLE SHROUD
5. EXISTING T-MOBILE GPS ANTENNA (BEYOND); (1) TOTAL
6. EXISTING FENCE WITH METAL CLADDING
7. EXISTING T-MOBILE ERICSSON AIR21 B2A B4P PANEL ANTENNA **TO REMAIN AND BE RELOCATED TO PROPOSED MOUNTING SYSTEM:** (1) PER SECTOR, (3) TOTAL (6/D-1)
7A. EXISTING T-MOBILE ERICSSON AIR21 B2A B4P PANEL ANTENNA **RELOCATED TO PROPOSED MOUNTING SYSTEM:** (1) PER SECTOR, (3) TOTAL (6/D-1)
8. EXISTING T-MOBILE TRIPLE T-ARM MOUNTING FRAME **TO BE REMOVED**
9. EXISTING T-MOBILE DUMMY PANEL ANTENNA **TO BE REMOVED;** (2) PER SECTOR, (6) TOTAL
10. EXISTING T-MOBILE ERICSSON AIR32 B4A B2P PANEL ANTENNA **TO REMAIN AND BE RELOCATED TO PROPOSED MOUNTING SYSTEM:** (1) PER SECTOR, (3) TOTAL (5/D-1)
10A. EXISTING T-MOBILE ERICSSON AIR32 B4A B2P PANEL ANTENNA **RELOCATED TO PROPOSED MOUNTING SYSTEM:** (1) PER SECTOR, (3) TOTAL (5/D-1)
11. **PROPOSED T-MOBILE RFS APXVAARR18_43-U-NA20 PANEL ANTENNA; (1) PER SECTOR, (3) TOTAL** (2/D-1) 4
12. **PROPOSED T-MOBILE RADIO 4449 B71/B85; (1) PER SECTOR, (3) TOTAL** (3/D-1) 4
13. EXISTING T-MOBILE GENERIC TWIN STYLE 1B-AWS TMA **TO BE REMOVED;** (1) PER SECTOR, (3) TOTAL 4
14. EXISTING FAUX 'PINEAPPLE' **TO BE REMOVED**
15. EXISTING FAUX PALM FRONDS **TO BE REMOVED**
16. **PROPOSED T-MOBILE ERICSSON AIR6449 B41 PANEL ANTENNA; (1) PER SECTOR, (3) TOTAL** 4 (1/D-1) 4
17. **PROPOSED T-MOBILE ERICSSON RADIO 4424 B25; (1) PER SECTOR, (3) TOTAL** (4/D-1) 4
18. **PROPOSED T-MOBILE 6X12 6AWG HYBRID CABLES; (3) TOTAL**
19. **PROPOSED T-MOBILE TRIPLE T-ARM MOUNTING SYSTEM COMPRISING OF THE FF:**
**(1) UNIVERSAL RING MOUNT**
**(3) 24" STAND-OFF ARMS**
**(3) 3 1/2"Ø O.D. X 8'-6" LONG HORIZONTAL PIPES**
**(12) 2 3/8"Ø O.D. X 7'-0" LONG VERTICAL MOUNTING PIPES WITH CROSSOVER PLATES**
20. 4 **PROPOSED LOPHOSTEMON CONFERTUS, BRISBANE BOX, 36" BOX SIZE, EVERGREEN; (3 TOTAL) (2) SHOWN, PLEASE REFER TO ENLARGED SITE PLAN FOR LOCATION OF THE OTHER (2) TREES.**
21. **PROPOSED TREE WELLS WITH CONCRETE CURB, TYP.** 4
22. EXISTING PALM TREES **TO BE REMOVED;** (1) TOTAL.
23. EXISTING PALM TREES **TO REMAIN:** (2) TOTAL.

## KEYNOTES:

NOTE:
1. EXISTING PALM TREE NOT SHOWN ON THIS ELEVATION VIEW FOR CLARITY.

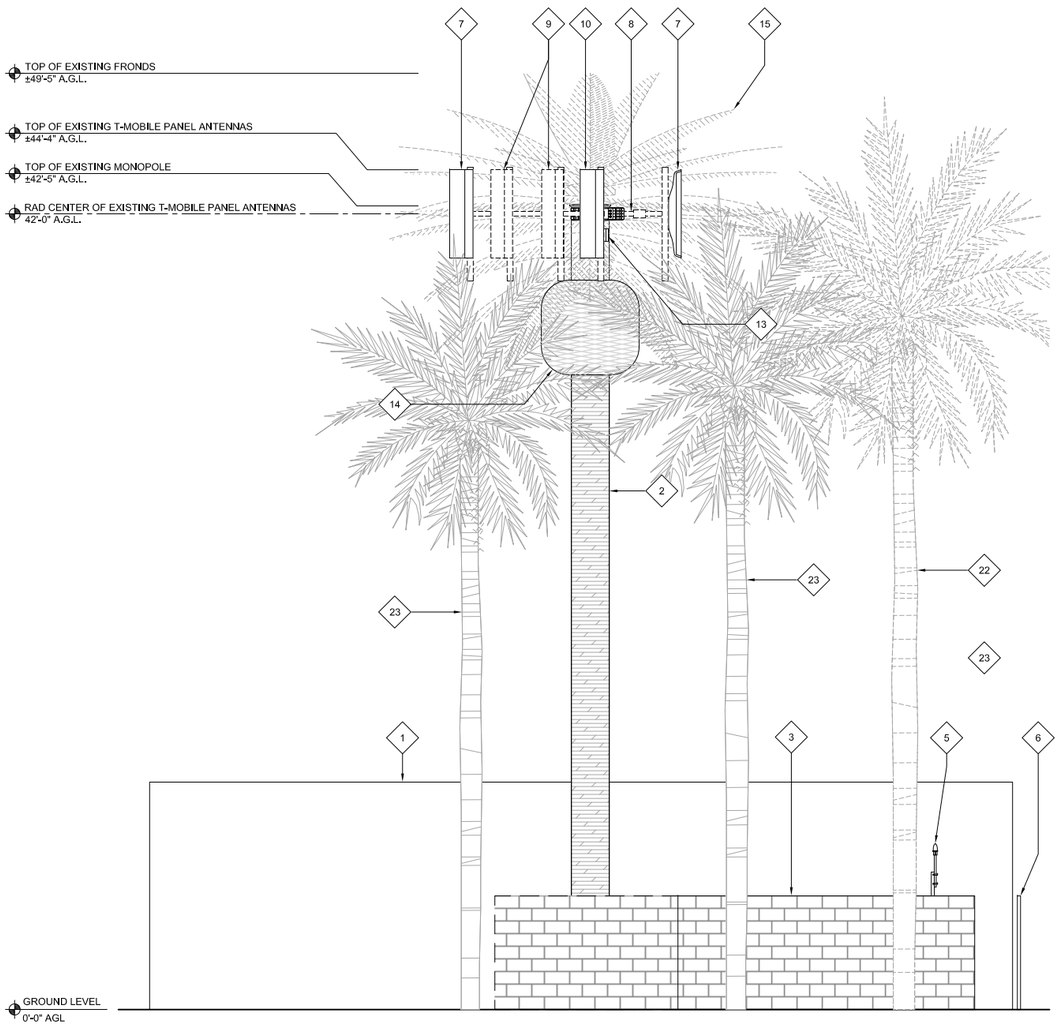


## EXISTING NORTH ELEVATION

24"x36" SCALE: 3/16" = 1'-0"
11"x17" SCALE: 3/32" = 1'-0"
0" 2' 4' 8'

1

NOTE:
ALL ANTENNAS TO HAVE FAUX EUCALYPTUS FOLIAGE SLEEVES.

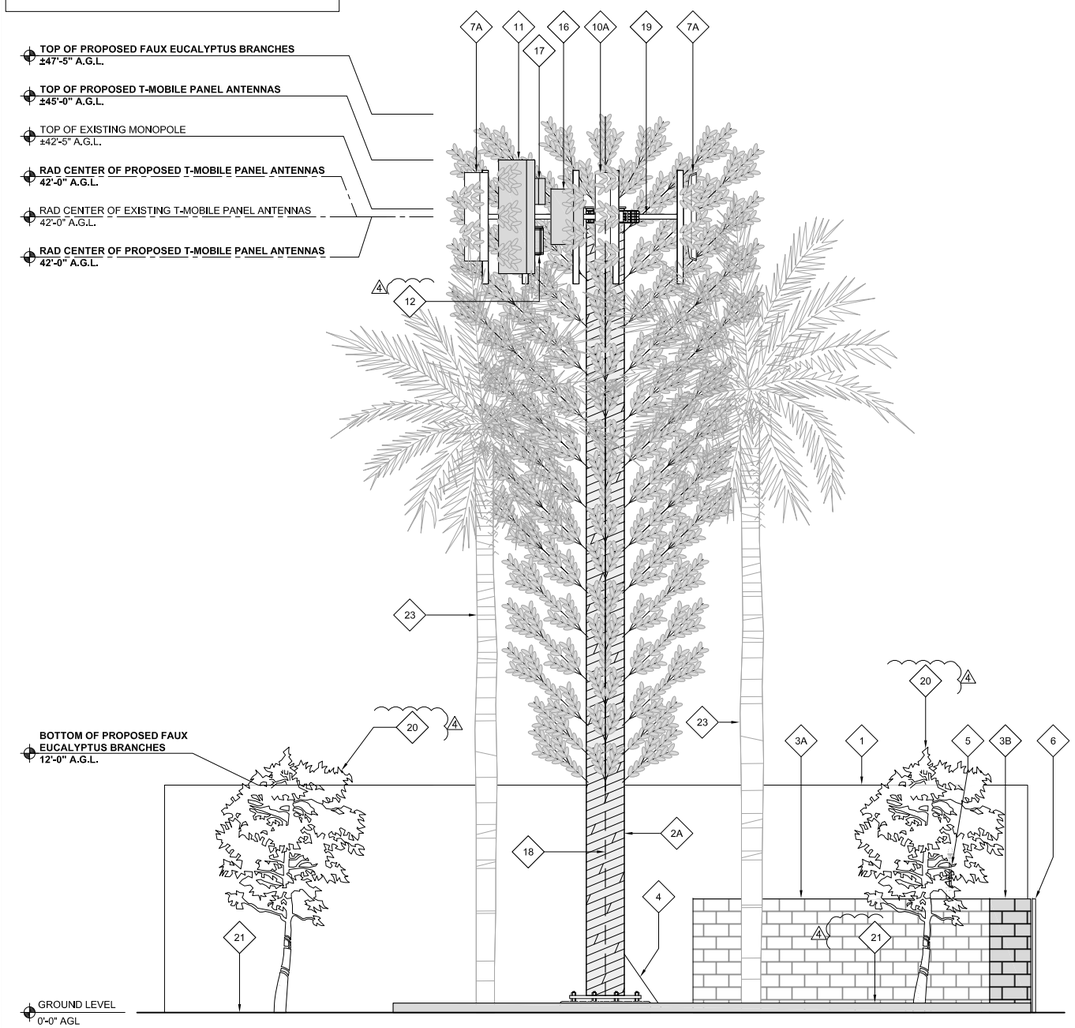


## PROPOSED NORTH ELEVATION

24"x36" SCALE: 3/16" = 1'-0"
11"x17" SCALE: 3/32" = 1'-0"
0" 2' 4' 8'

2

T-Mobile
10509 VISTA SORRENTO PKWY, STE 206
SAN DIEGO, CA 92121

CROWN CASTLE
200 SPECTRUM CENTER DR, SUITE 1700
IRVINE, CA 92618

M SQUARED WIRELESS
1387 CALLE AVANZADO
SAN CLEMENTE CA 92673 (949) 391-6824

DRAWN BY: BM
CHECKED BY: MM

| REV | DATE | DESCRIPTION | BY |
|---|---|---|---|
| | | | |
| | | | |
| 5 | 08/07/2020 | 100% ZD'S - REVISED - JX | SD |
| 4 | 07/20/2020 | 100% ZD'S - REVISED - JX | RDL |
| 3 | 07/06/2020 | 100% ZD'S - REVISED - JX | RDL |
| 2 | 05/29/2020 | 100% ZD'S - REVISED - JX | RN |
| 1 | 05/08/2020 | 100% ZD'S - REVISED | RDL |
| 0 | 04/24/2020 | 100% ZD'S FOR SUBMITTAL | RDL |
| A | 04/20/2020 | 90% ZD'S FOR REVIEW | RDL |

IT IS A VIOLATION OF LAW FOR ANY PERSON, UNLESS THEY ARE ACTING UNDER THE DIRECTION OF A LICENSED PROFESSIONAL ENGINEER, TO ALTER THIS DOCUMENT.

SD06808A - CUP RENEWAL
CROWN CASTLE SITE ID: 824829
ISLAND VIEW MARKET
5080 LOGAN AVE.
SAN DIEGO, CA 92113
MONO-EUCALYPTUS

SHEET TITLE
**ELEVATIONS**

SHEET NUMBER
**A-4**

1. EXISTING BUILDING, BEYOND
2. EXISTING MONOPOLE
2A. EXISTING MONOPOLE **TO BE PAINTED WITH EUCALYPTUS BARK COLORS**
3. EXISTING OUTDOOR T-MOBILE CMU WALL ENCLOSURE **(SOME PORTION TO BE REMOVED, SHOWN DASHED)**
3A. **REMAINING PORTION** OF EXISTING OUTDOOR T-MOBILE CMU WALL ENCLOSURE
3B. **PROPOSED T-MOBILE CMU WALL, HEIGHT TO MATCH EXISTING**
4. EXISTING T-MOBILE CABLE SHROUD
5. EXISTING T-MOBILE GPS ANTENNA (BEYOND); (1) TOTAL
6. EXISTING FENCE WITH METAL CLADDING
7. EXISTING T-MOBILE ERICSSON AIR21 B2A B4P PANEL ANTENNA **TO REMAIN AND BE RELOCATED TO PROPOSED MOUNTING SYSTEM:** (1) PER SECTOR, (3) TOTAL — 6 / D-1
7A. EXISTING T-MOBILE ERICSSON AIR21 B2A B4P PANEL ANTENNA **RELOCATED TO PROPOSED MOUNTING SYSTEM:** (1) PER SECTOR, (3) TOTAL — 6 / D-1
8. EXISTING T-MOBILE TRIPLE T-ARM MOUNTING FRAME **TO BE REMOVED**
9. EXISTING T-MOBILE DUMMY PANEL ANTENNA **TO BE REMOVED;** (2) PER SECTOR, (6) TOTAL
10. EXISTING T-MOBILE ERICSSON AIR32 B4A B2P PANEL ANTENNA **TO REMAIN AND BE RELOCATED TO PROPOSED MOUNTING SYSTEM:** (1) PER SECTOR, (3) TOTAL — 5 / D-1
10A. EXISTING T-MOBILE ERICSSON AIR32 B4A B2P PANEL ANTENNA **RELOCATED TO PROPOSED MOUNTING SYSTEM:** (1) PER SECTOR, (3) TOTAL — 5 / D-1
11. **PROPOSED T-MOBILE RFS APXVAARR18_43-U-NA20 PANEL ANTENNA; (1) PER SECTOR, (3) TOTAL** — 2 / D-1 [4]
12. **PROPOSED T-MOBILE RADIO 4449 B71/B85; (1) PER SECTOR, (3) TOTAL** — 3 / D-1 [4]
13. EXISTING T-MOBILE GENERIC TWIN STYLE 1B-AWS TMA **TO BE REMOVED;** (1) PER SECTOR, (3) TOTAL [4]
14. EXISTING FAUX 'PINEAPPLE' **TO BE REMOVED**
15. EXISTING FAUX PALM FRONDS **TO BE REMOVED**
16. **PROPOSED T-MOBILE ERICSSON AIR6449 B41 PANEL ANTENNA; (1) PER SECTOR, (3) TOTAL** [4] — 1 / D-1 [4]
17. **PROPOSED T-MOBILE ERICSSON RADIO 4424 B25; (1) PER SECTOR, (3) TOTAL** — 4 / D-1 [4]
18. **PROPOSED T-MOBILE 6X12 6AWG HYBRID CABLES; (3) TOTAL**
19. **PROPOSED T-MOBILE TRIPLE T-ARM MOUNTING SYSTEM COMPRISING OF THE FF:**
**(1) UNIVERSAL RING MOUNT**
**(3) 24" STAND-OFF ARMS**
**(3) 3 1/2"Ø O.D. X 8'-6" LONG HORIZONTAL PIPES**
**(12) 2 3/8"Ø O.D. X 7'-0" LONG VERTICAL MOUNTING PIPES WITH CROSSOVER PLATES**
20. [4] **PROPOSED LOPHOSTEMON CONFERTUS, BRISBANE BOX, 36" BOX SIZE, EVERGREEN; (3 TOTAL) (2) SHOWN, PLEASE REFER TO ENLARGED SITE PLAN FOR LOCATION OF THE OTHER (2) TREES.**
21. **PROPOSED TREE WELLS WITH CONCRETE CURB, TYP.** [4]
22. EXISTING PALM TREES **TO BE REMOVED;** (1) TOTAL.
23. EXISTING PALM TREES **TO REMAIN:** (2) TOTAL.

## KEYNOTES:

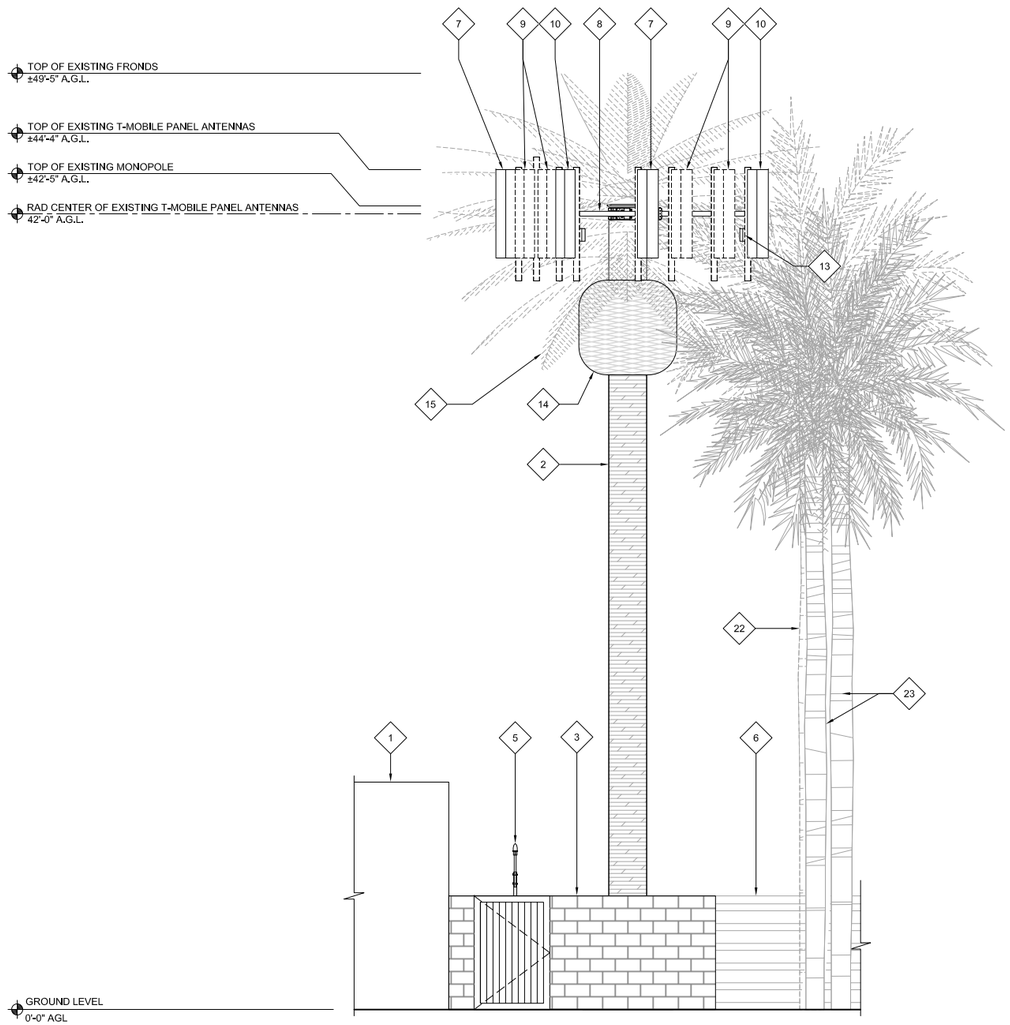


## EXISTING EAST ELEVATION

24"x36" SCALE: 3/16" = 1'-0"
11"x17" SCALE: 3/32" = 1'-0"
0" 2' 4' 8'

1

NOTE:

1. ALL ANTENNAS TO HAVE FAUX EUCALYPTUS FOLIAGE SLEEVES.

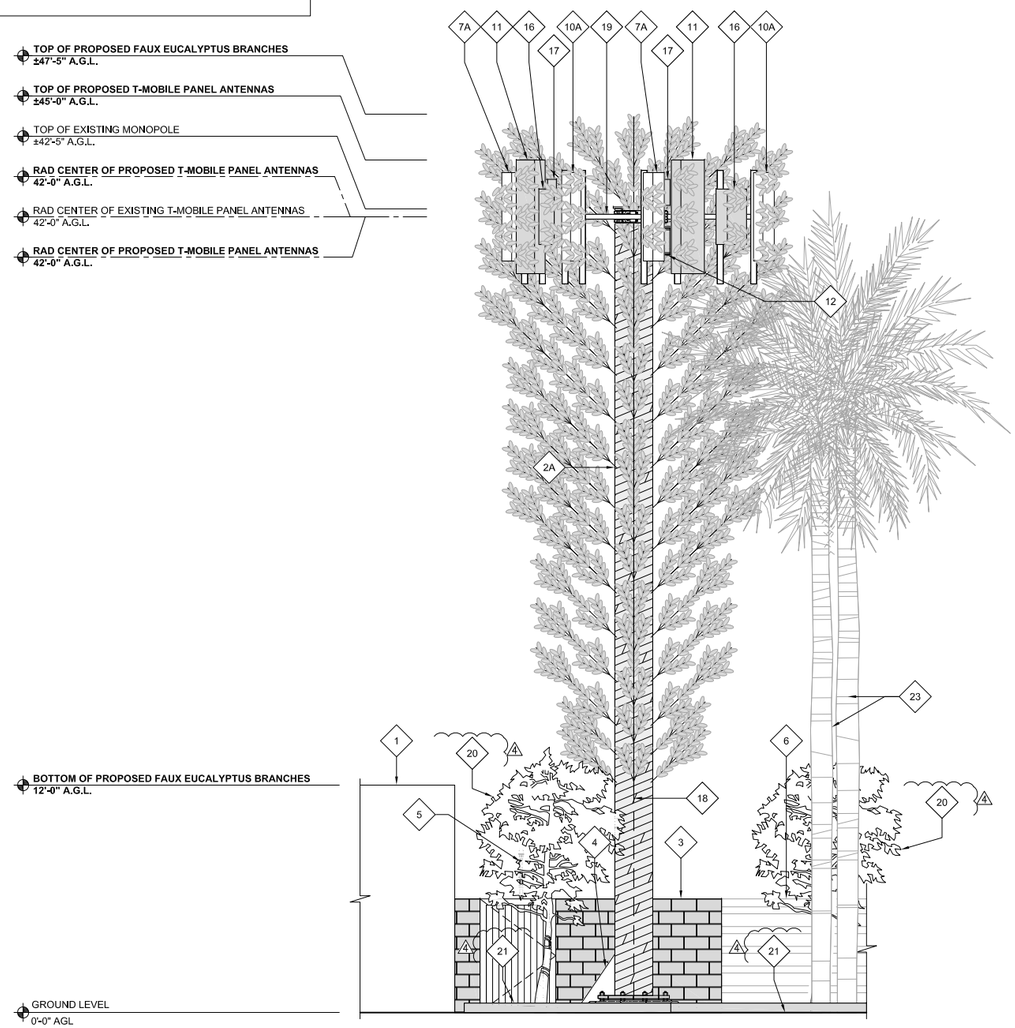


## PROPOSED EAST ELEVATION

24"x36" SCALE: 3/16" = 1'-0"
11"x17" SCALE: 3/32" = 1'-0"
0" 2' 4' 8'

2

T-Mobile
10509 VISTA SORRENTO PKWY, STE 206
SAN DIEGO, CA 92121

CROWN CASTLE
200 SPECTRUM CENTER DR, SUITE 1700
IRVINE, CA 92618

M SQUARED WIRELESS
1387 CALLE AVANZADO
SAN CLEMENTE CA 92673 (949) 391-6824

DRAWN BY: BM
CHECKED BY: MM

| REV | DATE | DESCRIPTION | BY |
|---|---|---|---|
| | | | |
| | | | |
| 5 | 08/07/2020 | 100% ZD'S - REVISED - JX | SD |
| 4 | 07/20/2020 | 100% ZD'S - REVISED - JX | RDL |
| 3 | 07/06/2020 | 100% ZD'S - REVISED - JX | RDL |
| 2 | 05/29/2020 | 100% ZD'S - REVISED - JX | RN |
| 1 | 05/08/2020 | 100% ZD'S - REVISED | RDL |
| 0 | 04/24/2020 | 100% ZD'S FOR SUBMITTAL | RDL |
| A | 04/20/2020 | 90% ZD'S FOR REVIEW | RDL |

IT IS A VIOLATION OF LAW FOR ANY PERSON, UNLESS THEY ARE ACTING UNDER THE DIRECTION OF A LICENSED PROFESSIONAL ENGINEER, TO ALTER THIS DOCUMENT.

SD06808A - CUP RENEWAL
CROWN CASTLE SITE ID: 824829
ISLAND VIEW MARKET
5080 LOGAN AVE.
SAN DIEGO, CA 92113
MONO-EUCALYPTUS

SHEET TITLE
**ELEVATIONS**

SHEET NUMBER
**A-5**

## NOT USED

24"x36" SCALE: NTS
11"x17" SCALE: NTS

9

| MANUFACTURER: | ERICSSON |
|---|---|
| MODEL NO.: | AIR 21 B2A B4P |
| DIMENSIONS: | TOTAL WEIGHT : |
| HEIGHT 56.2" | |
| WIDTH 12.1" | 91.5 LBS |
| DEPTH 7.9" | |

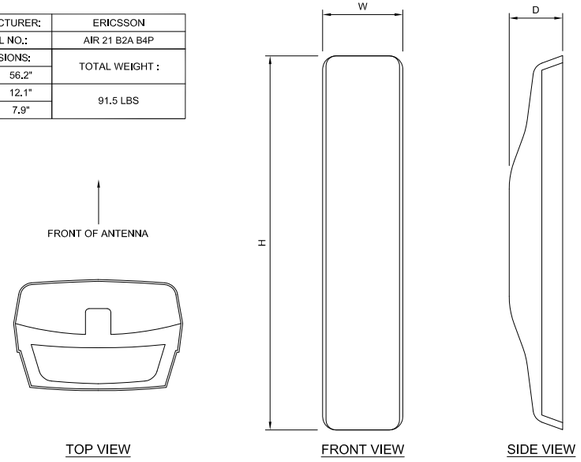


## ERICSSON AIR 21 ANTENNA

24"x36" SCALE: NTS
11"x17" SCALE: NTS

6

| MANUFACTURER: | ERICSSON |
|---|---|
| MODEL NO.: | RRUS 4449 |
| DIMENSIONS: | TOTAL WEIGHT : |
| A 15" | |
| B 13.2" | 70 LBS (31.7 kg) |
| C 9.3" | |

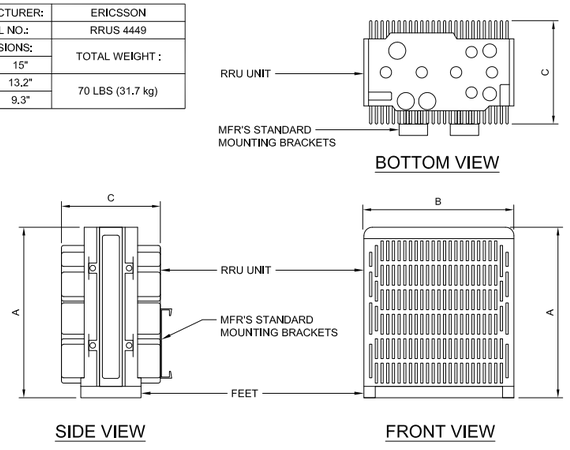


## ERICSSON RADIO 4449 B71/B85

24"x36" SCALE: NTS
11"x17" SCALE: NTS

3

## NOT USED

24"x36" SCALE: NTS
11"x17" SCALE: NTS

8

| MANUFACTURER: | ERICSSON |
|---|---|
| MODEL NO.: | AIR 32 B4A B2P |
| CONNECTOR: | (2) 7-16 DIN FEMALE |
| DIMENSIONS: | TOTAL WEIGHT : |
| HEIGHT 56.6" | |
| WIDTH 12.9" | 105.8 LBS |
| DEPTH 8.7" | |

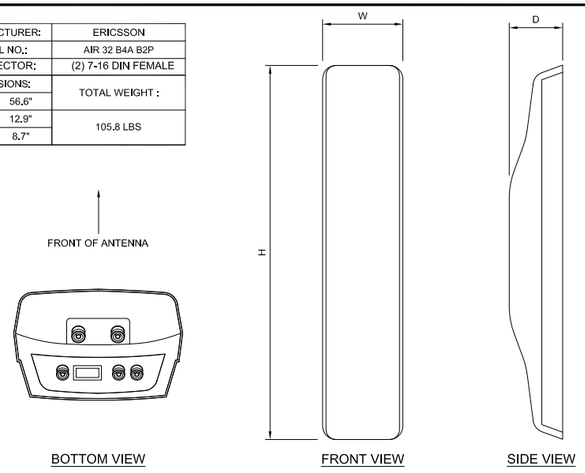


## ERICSSON AIR 32 ANTENNA

24"x36" SCALE: NTS
11"x17" SCALE: NTS

5

| RFS APXVAARR18-43-U-NA20 | |
|---|---|
| HEIGHT (H) | 72.0" |
| WIDTH (W) | 24" |
| DEPTH (D) | 8.5" |
| WEIGHT | 106 LBS. |
| SURVIVAL WIND SPEED: | 150.0 MPH |
| CONNECTOR: | (8) 4.3-10 DIN FEMALE - BOTTOM |
| MOUNTING POLE: | 2.36 - 4.72 INCHES |

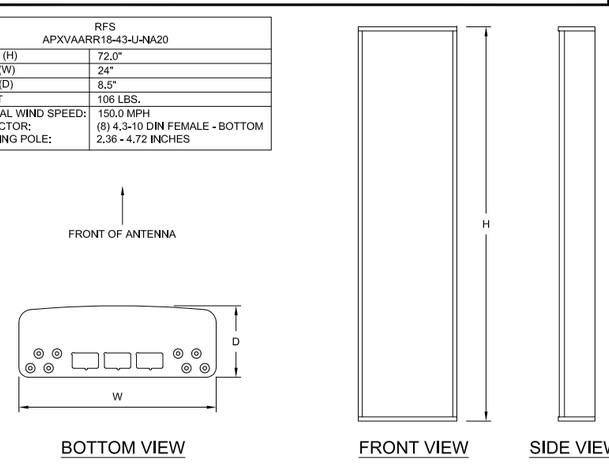


## RFS APXVAARR18-43-U-NA20 ANTENNA

24"x36" SCALE: NTS
11"x17" SCALE: NTS

2

## NOT USED

24"x36" SCALE: NTS
11"x17" SCALE: NTS

7

| MANUFACTURER: | ERICSSON |
|---|---|
| MODEL NO.: | RRUS 4424 B25 |
| DIMENSIONS: | TOTAL WEIGHT : |
| H 16.5" | |
| W 13.5" | ±88 LBS |
| D 9.6" | |

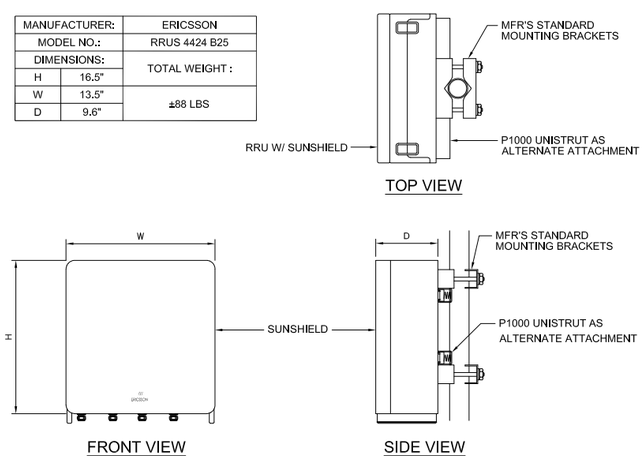


## ERICSSON 4424 B25

24"x36" SCALE: NTS
11"x17" SCALE: NTS

4

| ERICSSON AIR6449 2.5GHz (BAND 41) | |
|---|---|
| HEIGHT (H) | 33.1" |
| WIDTH (W) | 20.6" |
| DEPTH (D) | 8.3" |
| WEIGHT | 103 LBS. |
| DATA PORTS: | 4x25G eCPRI |

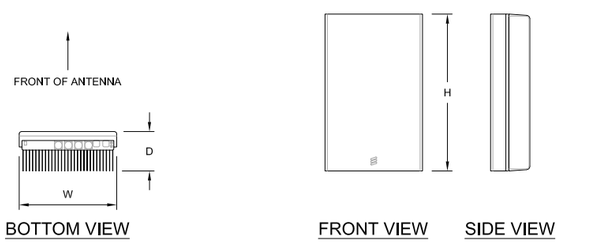


## ERICSSON AIR 6449 B41 ANTENNA

24"x36" SCALE: NTS
11"x17" SCALE: NTS

1

T-Mobile
10509 VISTA SORRENTO PKWY, STE 206
SAN DIEGO, CA 92121

CROWN CASTLE
200 SPECTRUM CENTER DR, SUITE 1700
IRVINE, CA 92618

M SQUARED WIRELESS
1387 CALLE AVANZADO
SAN CLEMENTE CA 92673 (949) 391-6824

DRAWN BY: BM

CHECKED BY: MM

| REV | DATE | DESCRIPTION | BY |
|---|---|---|---|
| | | | |
| | | | |
| 5 | 08/07/2020 | 100% ZD'S - REVISED - JX | SD |
| 4 | 07/20/2020 | 100% ZD'S - REVISED - JX | RDL |
| 3 | 07/06/2020 | 100% ZD'S - REVISED - JX | RDL |
| 2 | 05/29/2020 | 100% ZD'S - REVISED - JX | RN |
| 1 | 05/08/2020 | 100% ZD'S - REVISED | RDL |
| 0 | 04/24/2020 | 100% ZD'S FOR SUBMITTAL | RDL |
| A | 04/20/2020 | 90% ZD'S FOR REVIEW | RDL |

IT IS A VIOLATION OF LAW FOR ANY PERSON, UNLESS THEY ARE ACTING UNDER THE DIRECTION OF A LICENSED PROFESSIONAL ENGINEER, TO ALTER THIS DOCUMENT.

SD06808A - CUP RENEWAL
CROWN CASTLE SITE ID: 824829
ISLAND VIEW MARKET
5080 LOGAN AVE.
SAN DIEGO, CA 92113
MONO-EUCALYPTUS

SHEET TITLE

**DETAILS**

SHEET NUMBER

**D-1**

FOR REFERENCE ONLY

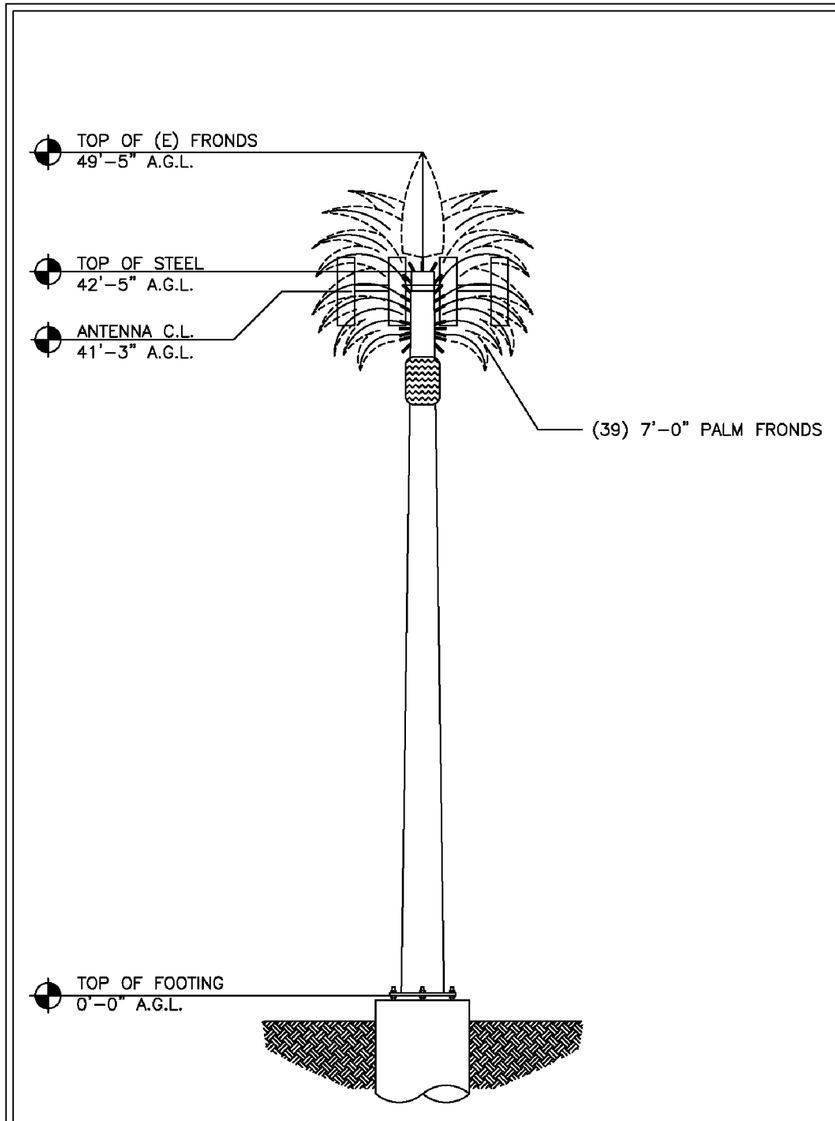


EXISTING MONOPALM ELEVATION VIEW — SCALE: NONE — 1

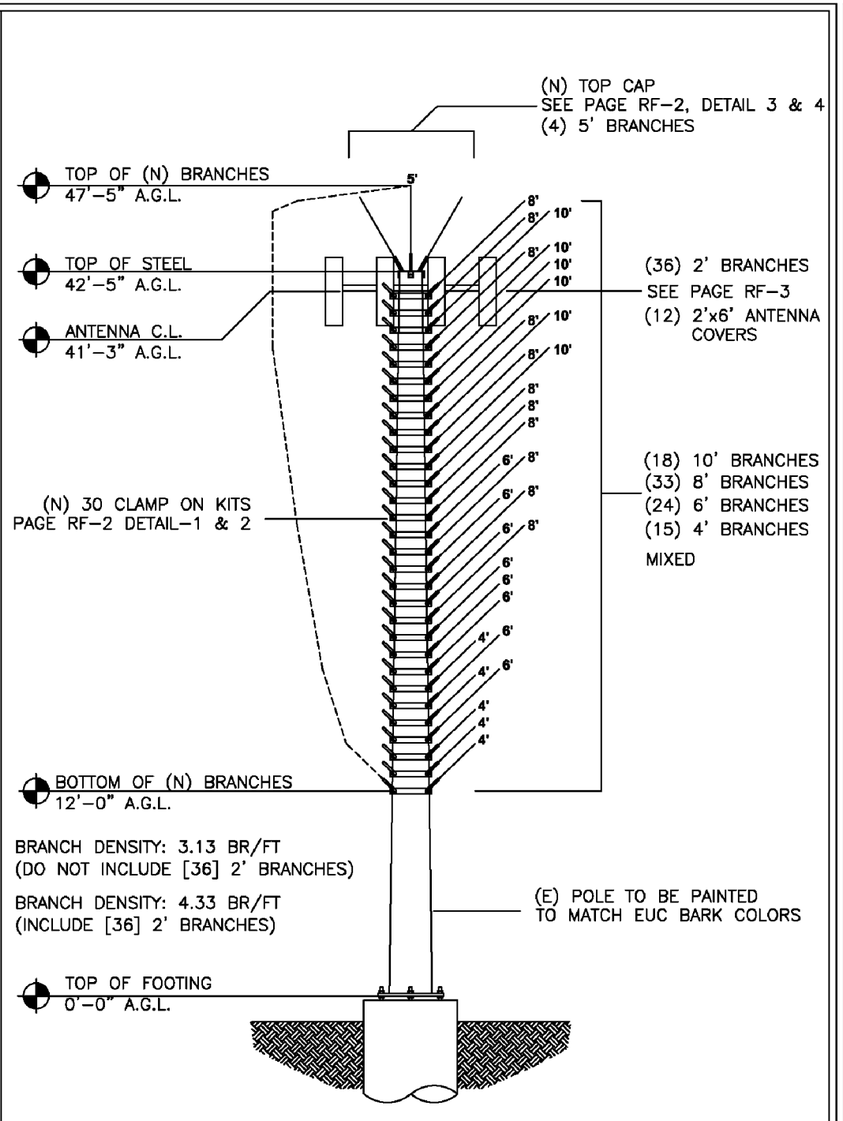


(N) EUCALIPTUS ELEVATION VIEW — SCALE: NONE — 2

CONSULTANT
SCI
SOLAR COMMUNICATIONS INTERNATIONAL, INC.
41745 ANZA ROAD
Temecula, CA 92592
Tel: (951) 695-5955
www.SCItransparent.com

COPYRIGHT 2020 SOLAR COMMUNICATIONS INTERNATIONAL, INC.
THESE DRAWINGS ARE PROTECTED BY UNITED STATES COPYRIGHT LAW AND MAY NOT BE REPRODUCED, DISTRIBUTED, TRANSMITTED, DISPLAYED, OR PUBLISHED WITHOUT THE PRIOR WRITTEN PERMISSION OF SOLAR COMMUNICATIONS INTERNATIONAL, INC. YOU MAY NOT ALTER OR REMOVE ANY TRADEMARK, COPYRIGHT OR OTHER NOTICE FROM COPIES OF THIS CONTENT.

CLIENT

PROJECT
RFTRANSPARENT MONOEUC

LOCATION
**ISLAND VIEW MARKET**
**#824829**
5080 LOGAN AVE
SAN DIEGO, CA 92113
SAN DIEGO COUNTY

ISSUED FOR
PRODUCTION

| DW'N BY | CK'D BY | DATE |
|---|---|---|
| LEM | LEM | 21MAR18 |

REVISIONS

| REV. | CHANGES | DATE | BY |
|---|---|---|---|
| A | EUC DESIGN | 27MAR20 | LE |

ENGINEER SEAL

SHEET TITLE
ELEVATION VIEW

WSC PROJECT NUMBER

DRAWING NUMBER

PAGE NUMBER
RF-1

T-Mobile
10509 VISTA SORRENTO PKWY, STE 206
SAN DIEGO, CA 92121

CROWN CASTLE
200 SPECTRUM CENTER DR, SUITE 1700
IRVINE, CA 92618

M SQUARED WIRELESS
1387 CALLE AVANZADO
SAN CLEMENTE CA 92673 (949) 391-6824

| | |
|---|---|
| DRAWN BY: | BM |
| CHECKED BY: | MM |

| REV | DATE | DESCRIPTION | BY |
|---|---|---|---|
| 5 | 08/07/2020 | 100% ZD'S - REVISED - JX | SD |
| 4 | 07/20/2020 | 100% ZD'S - REVISED - JX | RDL |
| 3 | 07/06/2020 | 100% ZD'S - REVISED - JX | RDL |
| 2 | 05/29/2020 | 100% ZD'S - REVISED - JX | RN |
| 1 | 05/08/2020 | 100% ZD'S - REVISED | RDL |
| 0 | 04/24/2020 | 100% ZD'S FOR SUBMITTAL | RDL |
| A | 04/20/2020 | 90% ZD'S FOR REVIEW | RDL |

IT IS A VIOLATION OF LAW FOR ANY PERSON, UNLESS THEY ARE ACTING UNDER THE DIRECTION OF A LICENSED PROFESSIONAL ENGINEER, TO ALTER THIS DOCUMENT.

SD06808A - CUP RENEWAL
CROWN CASTLE SITE ID: 824829
ISLAND VIEW MARKET
5080 LOGAN AVE.
SAN DIEGO, CA 92113
MONO-EUCALYPTUS

SHEET TITLE
**ELEVATION VIEW**

SHEET NUMBER
**RF-1**

FOR REFERENCE ONLY

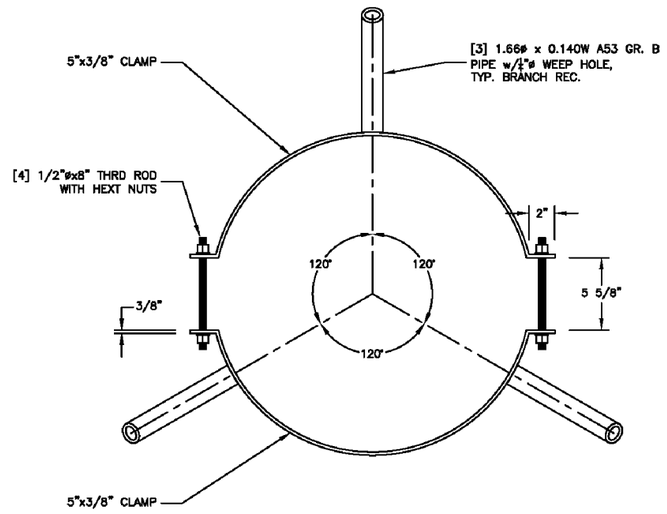


WEIGHT: 35.00 LBS

**NEW CLAMP ON KIT PLAN VIEW (30 REQUIRED)** | SCALE: NONE | 1

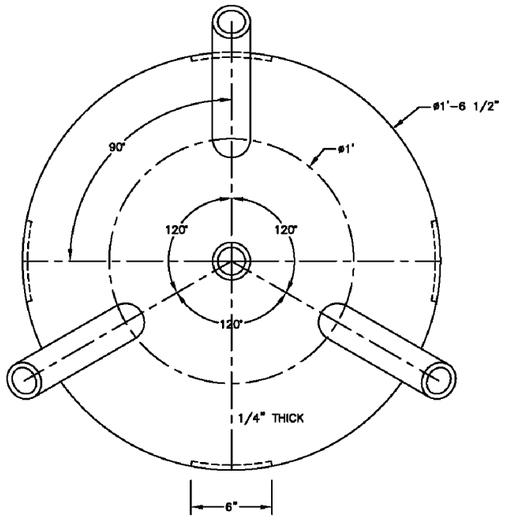


WEIGHT: 49.00 LBS

**NEW TOP CAP PLAN VIEW (1 REQUIRED)** | SCALE: NONE | 3

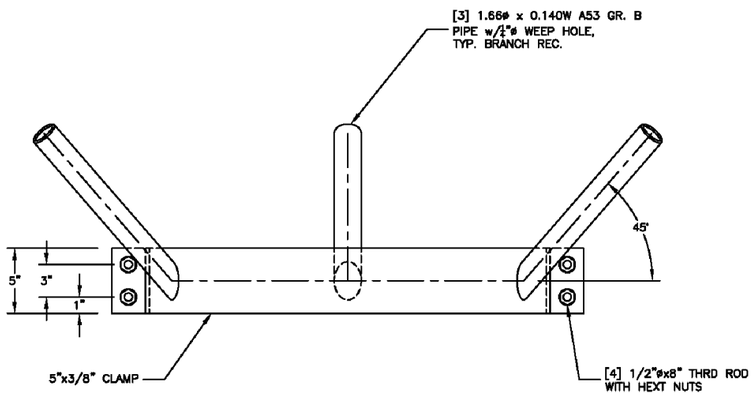


**NEW CLAMP ON KIT ELEVATION VIEW** | SCALE: NONE | 2

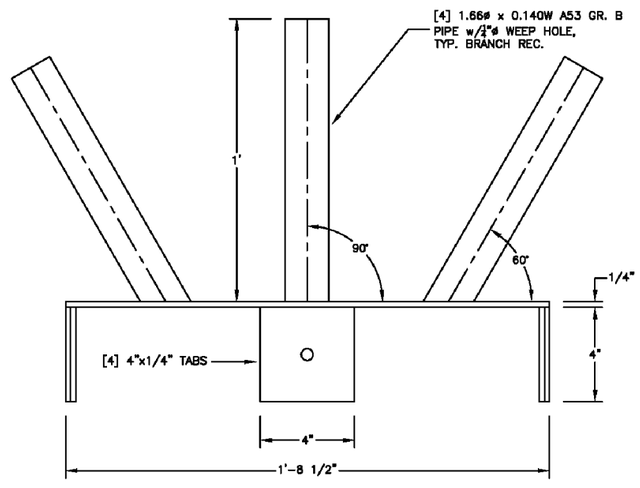


**NEW TOP CAP ELEVATION VIEW** | SCALE: NONE | 4

CONSULTANT

SCI
SOLAR COMMUNICATIONS INTERNATIONAL, INC.
41745 ANZA ROAD
Temecula, CA 92592
Tel: (951) 695-5955
www.SCItransparent.com

COPYRIGHT 2020 SOLAR COMMUNICATIONS INTERNATIONAL, INC. THESE DRAWINGS ARE PROTECTED BY UNITED STATES COPYRIGHT LAW AND MAY NOT BE REPRODUCED, DISTRIBUTED, TRANSMITTED, DISPLAYED, OR PUBLISHED WITHOUT THE PRIOR WRITTEN PERMISSION OF SOLAR COMMUNICATIONS INTERNATIONAL, INC. YOU MAY NOT ALTER OR REMOVE ANY TRADEMARK, COPYRIGHT OR OTHER NOTICE FROM COPIES OF THIS CONTENT.

CLIENT

PROJECT
RFTRANSPARENT MONOEUC

LOCATION
**ISLAND VIEW MARKET**
**#824829**
5080 LOGAN AVE
SAN DIEGO, CA 92113
SAN DIEGO COUNTY

ISSUED FOR
PRODUCTION

| DW'N BY | CK'D BY | DATE |
|---|---|---|
| LEM | LEM | 21MAR18 |

REVISIONS

| REV. | CHANGES | DATE | BY |
|---|---|---|---|
| A | EUC DESIGN | 27MAR20 | LE |

ENGINEER SEAL

SHEET TITLE
DETAIL VIEW

WSC PROJECT NUMBER

DRAWING NUMBER

PAGE NUMBER
**RF-2**

T-Mobile
10509 VISTA SORRENTO PKWY, STE 206
SAN DIEGO, CA 92121

CROWN CASTLE
200 SPECTRUM CENTER DR, SUITE 1700
IRVINE, CA 92618

M SQUARED WIRELESS
1387 CALLE AVANZADO
SAN CLEMENTE CA 92673 (949) 391-6824

| | |
|---|---|
| DRAWN BY: | BM |
| CHECKED BY: | MM |

| REV | DATE | DESCRIPTION | BY |
|---|---|---|---|
| 5 | 08/07/2020 | 100% ZD'S - REVISED - JX | SD |
| 4 | 07/20/2020 | 100% ZD'S - REVISED - JX | RDL |
| 3 | 07/06/2020 | 100% ZD'S - REVISED - JX | RDL |
| 2 | 05/29/2020 | 100% ZD'S - REVISED - JX | RN |
| 1 | 05/08/2020 | 100% ZD'S - REVISED | RDL |
| 0 | 04/24/2020 | 100% ZD'S FOR SUBMITTAL | RDL |
| A | 04/20/2020 | 90% ZD'S FOR REVIEW | RDL |

IT IS A VIOLATION OF LAW FOR ANY PERSON, UNLESS THEY ARE ACTING UNDER THE DIRECTION OF A LICENSED PROFESSIONAL ENGINEER, TO ALTER THIS DOCUMENT.

SD06808A - CUP RENEWAL
CROWN CASTLE SITE ID: 824829
ISLAND VIEW MARKET
5080 LOGAN AVE.
SAN DIEGO, CA 92113
MONO-EUCALYPTUS

SHEET TITLE
**DETAIL VIEW**

SHEET NUMBER
**RF-2**

**DETAIL VIEW - SCI**

24"x36" SCALE: NTS
11"x17" SCALE: NTS

1

ATTACHMENT 5

FOR REFERENCE ONLY

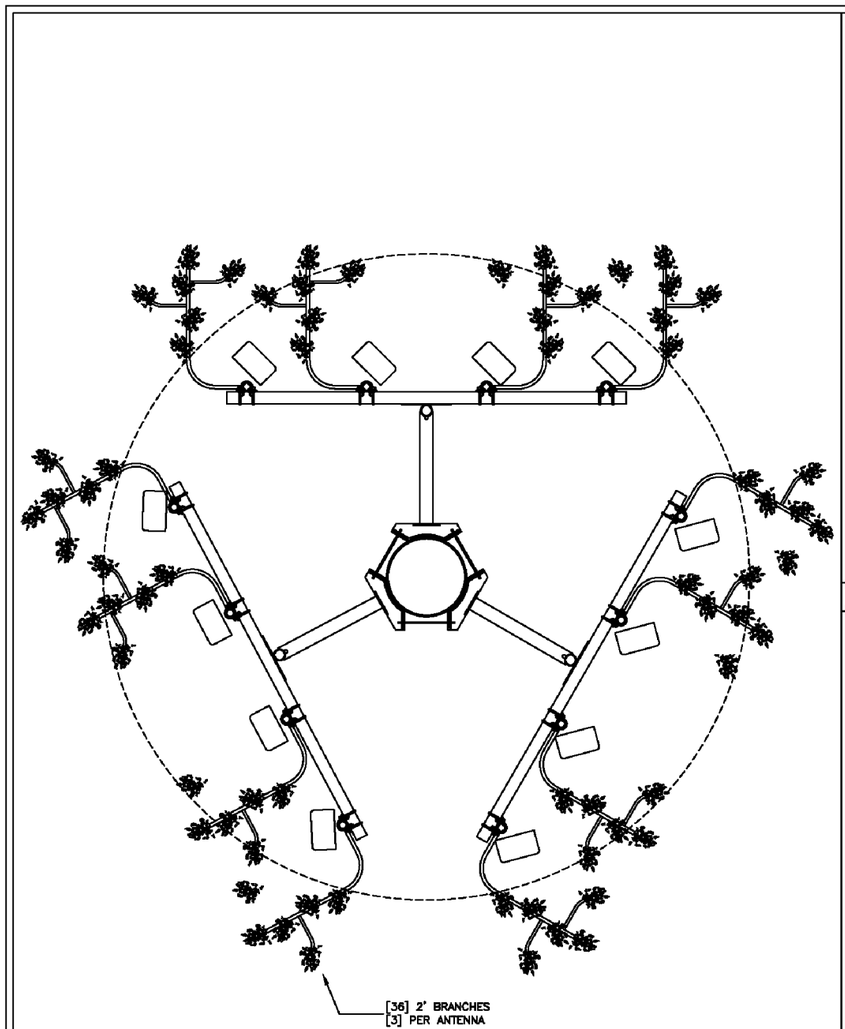


NEW ANTENNA PLAN VIEW AT 41'-3" AGL — SCALE: NONE — 1

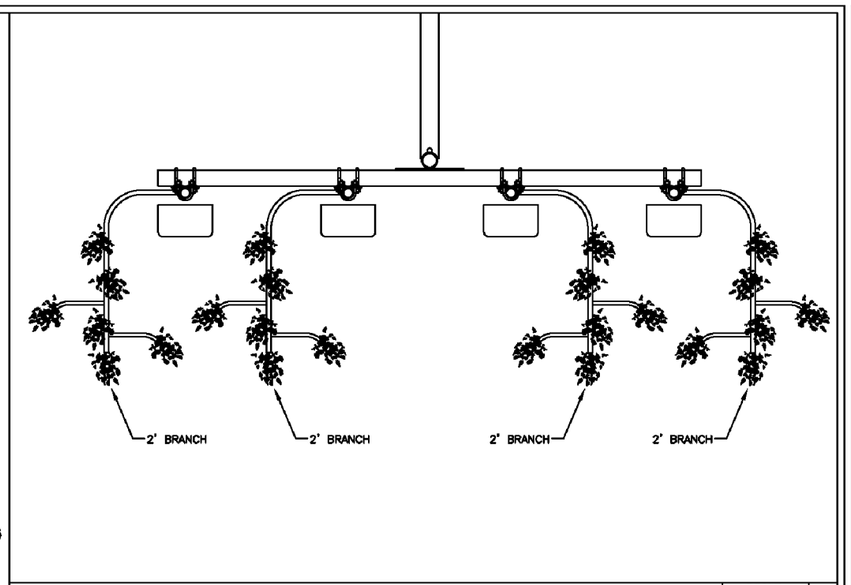


ENLARGE ANTENNA PLAN VIEW AT 41'-3" AGL — SCALE: NONE — 2

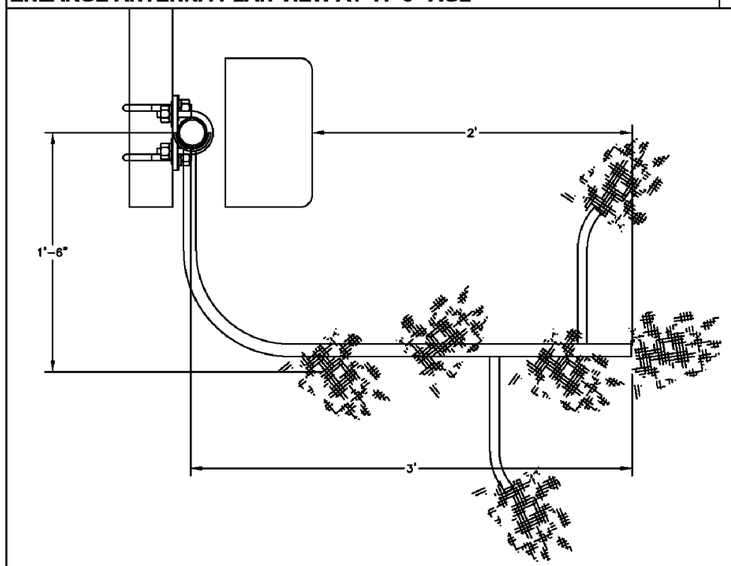


ENLARGE 2' ANTENNA BRANCH MOUNTING DETAIL VIEW — SCALE: NONE — 3

CONSULTANT

SCI
SOLAR COMMUNICATIONS INTERNATIONAL, INC.
41745 ANZA ROAD
Temecula, CA 92592
Tel: (951) 695-5965
www.RFTransparent.com

COPYRIGHT 2009 SOLAR COMMUNICATIONS INTERNATIONAL, INC. THESE DRAWINGS ARE PROTECTED BY UNITED STATES COPYRIGHT LAW AND MAY NOT BE REPRODUCED, DISTRIBUTED, TRANSMITTED, DISPLAYED, OR PUBLISHED WITHOUT THE PRIOR WRITTEN PERMISSION OF SOLAR COMMUNICATIONS INTERNATIONAL, INC. YOU MAY NOT ALTER OR REMOVE ANY TRADEMARK, COPYRIGHT OR OTHER NOTICE FROM COPIES OF THIS CONTENT.

CLIENT

PROJECT
RFTRANSPARENT MONOEUC

LOCATION
ISLAND VIEW MARKET
#824829
5080 LOGAN AVE
SAN DIEGO, CA 92113
SAN DIEGO COUNTY

ISSUED FOR
PRODUCTION

| DW'N BY | CK'D BY | DATE |
|---|---|---|
| LEM | LEM | 21MAR18 |

REVISIONS

| REV. | CHANGES | DATE | BY |
|---|---|---|---|
| A | EUC DESIGN | 27MAR20 | LE |

ENGINEER SEAL

SHEET TITLE
PLAN & DETAIL VIEW

WSC PROJECT NUMBER

DRAWING NUMBER

PAGE NUMBER
RF-3

T-Mobile
10509 VISTA SORRENTO PKWY, STE 206
SAN DIEGO, CA 92121

CROWN CASTLE
200 SPECTRUM CENTER DR, SUITE 1700
IRVINE, CA 92618

M SQUARED WIRELESS
1387 CALLE AVANZADO
SAN CLEMENTE CA 92673 (949) 391-6824

| | |
|---|---|
| DRAWN BY: | BM |
| CHECKED BY: | MM |

| REV | DATE | DESCRIPTION | BY |
|---|---|---|---|
| 5 | 08/07/2020 | 100% ZD'S - REVISED - JX | SD |
| 4 | 07/20/2020 | 100% ZD'S - REVISED - JX | RDL |
| 3 | 07/06/2020 | 100% ZD'S - REVISED - JX | RDL |
| 2 | 05/29/2020 | 100% ZD'S - REVISED - JX | RN |
| 1 | 05/08/2020 | 100% ZD'S - REVISED | RDL |
| 0 | 04/24/2020 | 100% ZD'S FOR SUBMITTAL | RDL |
| A | 04/20/2020 | 90% ZD'S FOR REVIEW | RDL |

IT IS A VIOLATION OF LAW FOR ANY PERSON, UNLESS THEY ARE ACTING UNDER THE DIRECTION OF A LICENSED PROFESSIONAL ENGINEER, TO ALTER THIS DOCUMENT.

SD06808A - CUP RENEWAL
CROWN CASTLE SITE ID: 824829
ISLAND VIEW MARKET
5080 LOGAN AVE.
SAN DIEGO, CA 92113
MONO-EUCALYPTUS

SHEET TITLE
PLAN AND DETAIL VIEW

SHEET NUMBER
RF-3

PLAN AND DETAIL VIEW - SCI

24"x36" SCALE: NTS
11"x17" SCALE: NTS

1

FOR REFERENCE ONLY

JOB NO.: U1085-861-181

**PROJECT:** Island View Market

## Monopine Branch Layout

| | | |
|---|---|---|
| Eff. Area Factor: | 0.85 | |
| $C_A$ Factor: | 0.6 | |
| Bott. Branch Elev. (ft): | 12 | ft |
| Top of Steel Elev. (ft): | 42.4 | ft |

**Branch Layout Along Pole:**

| Branch Length (ft) | Qty | Elevation Start (ft) | Elevation Stop (ft) | Branch Wt. (lbs) | Total Wt. (lbs) | Wind Area Gross ($ft^2$) | Wind Area Eff. ($ft^2$) | $C_AA_E$ ($ft^2$) |
|---|---|---|---|---|---|---|---|---|
| 10 | 18 | 36.3 | 42.4 | 50.5 | 909 | 131.0 | 110.9 | 66.5 |
| 8 | 18 | 30.3 | 36.3 | 38.4 | 690.84 | 106.9 | 90.5 | 54.3 |
| 8 | 15 | 25.2 | 30.3 | 38.4 | 575.7 | 89.2 | 75.5 | 45.3 |
| 6 | 12 | 21.1 | 25.2 | 27.1 | 325.56 | 55.3 | 46.8 | 28.1 |
| 6 | 12 | 17.1 | 21.1 | 27.1 | 325.56 | 55.3 | 46.9 | 28.1 |
| 4 | 15 | 12.0 | 17.1 | 17.9 | 268.05 | 49.1 | 41.5 | 24.9 |
| | | | | Total (lbs): | 3094.71 | | | |

**Antenna Branches:**

| Branch Length (ft) | Qty | Elev. (ft) | Weight | $C_AA_E$ ($ft^2$) |
|---|---|---|---|---|
| 2 | 36 | 41.25 | 342 | 27.5 |
| | | | | |
| | | | | |

**Top Crown:**

| Branch Length (ft) | Qty | Weight | Total Wt. | Total $C_AA_E$ |
|---|---|---|---|---|
| 5 | 4 | 80.32 | 80.32 | 19.95 |
| | | | | |

**EPA VALUES**

SCALE: NONE | 1

CONSULTANT
SOLAR COMMUNICATIONS INTERNATIONAL, INC.
41745 AVIARA ROAD
Temecula, CA 92590
Tel: (951) 695-5695
www.SCIrenewal.com

THESE PLANS ARE PROPERTY OF SOLAR COMMUNICATIONS INTERNATIONAL, INC. AND ARE NOT TO BE REPRODUCED, PUBLISHED, TRANSMITTED, DISTRIBUTED, OR DISCLOSED WITHOUT THE WRITTEN PERMISSION OF SOLAR COMMUNICATIONS INTERNATIONAL, INC. ANY UNAUTHORIZED USE IS PROHIBITED. © COPYRIGHT 2020 SOLAR COMMUNICATIONS INTERNATIONAL, INC. ALL RIGHTS RESERVED. COPYRIGHT MAY COVER NEWLY DEVELOPED MATERIALS OR MODIFICATIONS OF EXISTING MATERIALS ON THIS DRAWING. USE OF ANY COPYRIGHTED MATERIAL WITHOUT WRITTEN CONSENT OF THE COPYRIGHT OWNER MAY VIOLATE COPYRIGHT LAWS AND IS PROHIBITED. COPYRIGHT MAY COVER NEWLY DEVELOPED MATERIALS OR MODIFICATIONS OF EXISTING MATERIALS ON THIS DRAWING. USE OF ANY COPYRIGHTED MATERIAL WITHOUT WRITTEN CONSENT OF THE COPYRIGHT OWNER MAY VIOLATE COPYRIGHT LAWS AND IS PROHIBITED.

CLIENT

PROJECT
RFTRANSPARENT MONOEUC

LOCATION
**ISLAND VIEW MARKET**
**#824829**
5060 LOGAN AVE
SAN DIEGO, CA 92113
SAN DIEGO COUNTY

ISSUED FOR
PRODUCTION

| DWN BY | CK'D BY | DATE |
|---|---|---|
| LEM | LEM | 21MAR18 |

REVISIONS

| REV. | CHANGES | DATE | BY |
|---|---|---|---|
| A | EUC DESIGN | 27MAR20 | LE |

ENGINEER SEAL

SHEET TITLE
EPA VALUES

WSC PROJECT NUMBER

DRAWING NUMBER

PAGE NUMBER
**RF-4**

T-Mobile
10509 VISTA SORRENTO PKWY, STE 206
SAN DIEGO, CA 92121

CROWN CASTLE
200 SPECTRUM CENTER DR, SUITE 1700
IRVINE, CA 92618

M SQUARED WIRELESS
1387 CALLE AVANZADO
SAN CLEMENTE CA 92673 (949) 391-6824

DRAWN BY: BM

CHECKED BY: MM

| REV | DATE | DESCRIPTION | BY |
|---|---|---|---|
| 5 | 08/07/2020 | 100% ZD'S - REVISED - JX | SD |
| 4 | 07/20/2020 | 100% ZD'S - REVISED - JX | RDL |
| 3 | 07/06/2020 | 100% ZD'S - REVISED - JX | RDL |
| 2 | 05/29/2020 | 100% ZD'S - REVISED - JX | RN |
| 1 | 05/08/2020 | 100% ZD'S - REVISED | RDL |
| 0 | 04/24/2020 | 100% ZD'S FOR SUBMITTAL | RDL |
| A | 04/20/2020 | 90% ZD'S FOR REVIEW | RDL |

IT IS A VIOLATION OF LAW FOR ANY PERSON, UNLESS THEY ARE ACTING UNDER THE DIRECTION OF A LICENSED PROFESSIONAL ENGINEER, TO ALTER THIS DOCUMENT.

SD06808A - CUP RENEWAL
CROWN CASTLE SITE ID: 824829
ISLAND VIEW MARKET
5080 LOGAN AVE.
SAN DIEGO, CA 92113
MONO-EUCALYPTUS

SHEET TITLE
**EPA VALUES**

SHEET NUMBER
**RF-4**

FOR REFERENCE ONLY

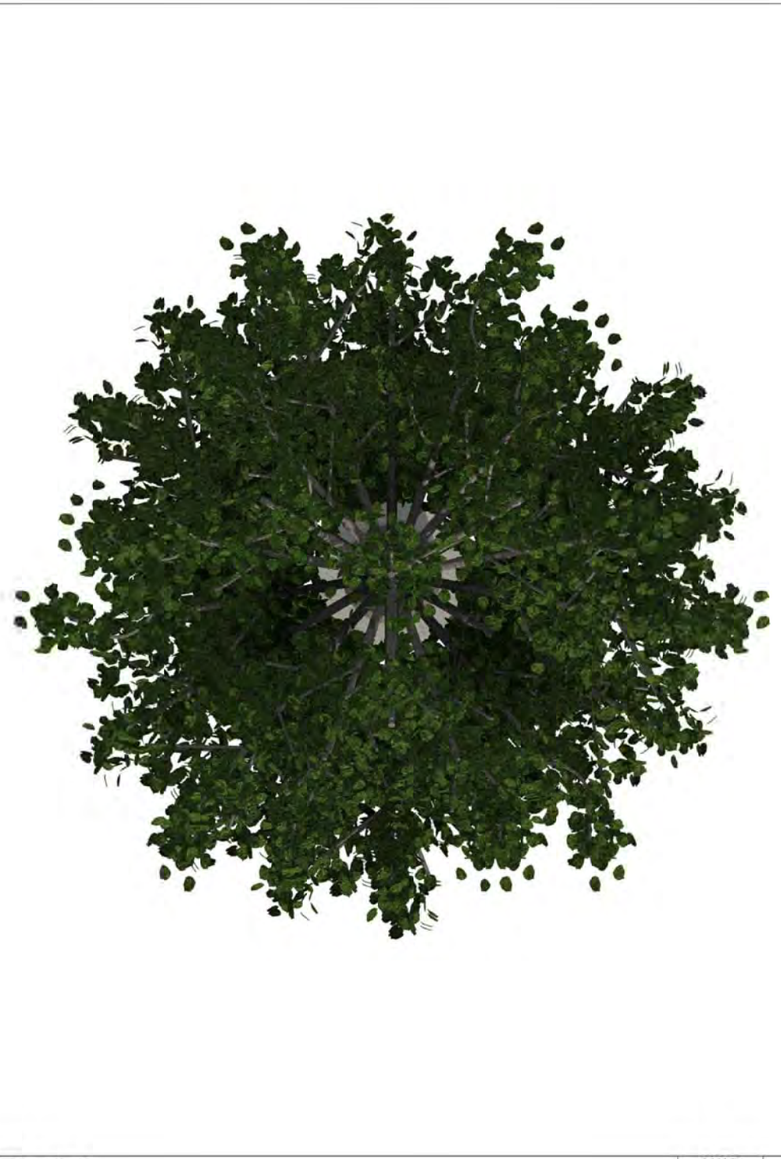

PLAN VIEW — SCALE: NONE — 1

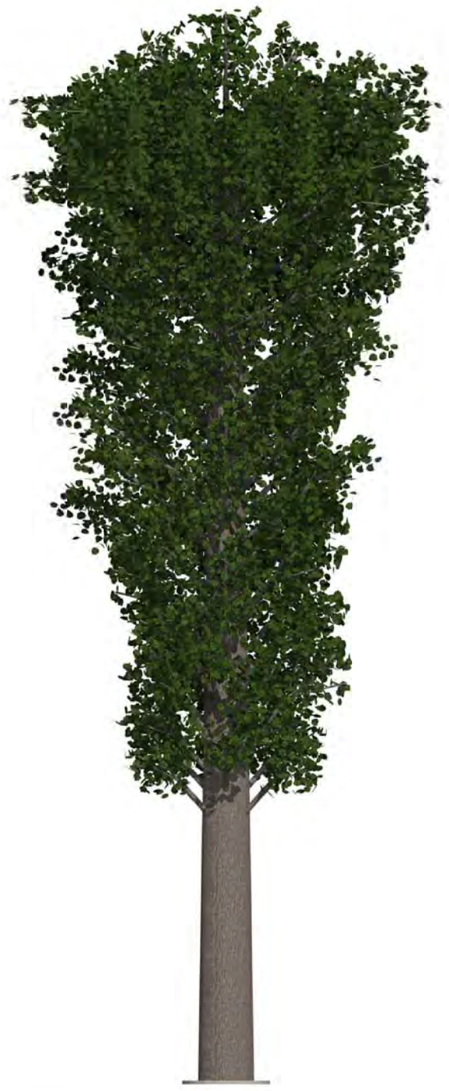

ELEVATION VIEW — SCALE: NONE — 2

CONSULTANT

SCI
SOLAR COMMUNICATIONS INTERNATIONAL, INC.
41745 ANZA ROAD
Temecula, CA 92592
Tel: (951) 698-5985
www.RFTransparent.com

COPYRIGHT 2008 SOLAR COMMUNICATIONS INTERNATIONAL, INC. THESE MATERIALS ARE PROTECTED BY FEDERAL COPYRIGHT LAW AND MAY BE USED, REPRODUCED OR DISCLOSED ONLY AS EXPRESSLY AUTHORIZED IN WRITING BY SOLAR COMMUNICATIONS INTERNATIONAL, INC. YOU MAY NOT ALTER OR REMOVE ANY TRADEMARK, COPYRIGHT OR OTHER NOTICE FROM COPIES OF THE CONTENT.

CLIENT

PROJECT
RFTRANSPARENT WATER TANK

LOCATION
**ISLAND VIEW MARKET #824829**
5080 LOGAN AVE
SAN DIEGO, CA 92113
SAN DIEGO COUNTY

ISSUED FOR
PRODUCTION

| DW'N BY | CK'D BY | DATE |
|---|---|---|
| OPM | LEM | 21MAR18 |

REVISIONS

| REV. | CHANGES | DATE | BY |
|---|---|---|---|
| A | EUC DESING | 27MAR20 | LE |
| B | ANTENNA LAYOUT UPDATE | 12JUN20 | OPM |

ENGINEER SEAL

SHEET TITLE
PLAN & ELEVATION VIEW

WSC PROJECT NUMBER

DRAWING NUMBER

PAGE NUMBER
RF-1

T-Mobile
10509 VISTA SORRENTO PKWY, STE 206
SAN DIEGO, CA 92121

CROWN CASTLE
200 SPECTRUM CENTER DR, SUITE 1700
IRVINE, CA 92618

M SQUARED WIRELESS
1387 CALLE AVANZADO
SAN CLEMENTE CA 92673 (949) 391-6824

| | |
|---|---|
| DRAWN BY: | BM |
| CHECKED BY: | MM |

| REV | DATE | DESCRIPTION | BY |
|---|---|---|---|
| | | | |
| | | | |
| 5 | 08/07/2020 | 100% ZD'S - REVISED - JX | SD |
| 4 | 07/20/2020 | 100% ZD'S - REVISED - JX | RDL |
| 3 | 07/06/2020 | 100% ZD'S - REVISED - JX | RDL |
| 2 | 05/29/2020 | 100% ZD'S - REVISED - JX | RN |
| 1 | 05/08/2020 | 100% ZD'S - REVISED | RDL |
| 0 | 04/24/2020 | 100% ZD'S FOR SUBMITTAL | RDL |
| A | 04/20/2020 | 90% ZD'S FOR REVIEW | RDL |

IT IS A VIOLATION OF LAW FOR ANY PERSON, UNLESS THEY ARE ACTING UNDER THE DIRECTION OF A LICENSED PROFESSIONAL ENGINEER, TO ALTER THIS DOCUMENT.

SD06808A - CUP RENEWAL
CROWN CASTLE SITE ID: 824829
ISLAND VIEW MARKET
5080 LOGAN AVE.
SAN DIEGO, CA 92113
MONO-EUCALYPTUS

SHEET TITLE
**3D RENDER**
**PLAN AND ELEVATION VIEW**

SHEET NUMBER
**RF-5**

**3D RENDER - PLAN AND ELEVATION VIEW - SCI**

24"x36" SCALE: NTS
11"x17" SCALE: NTS

1

ATTACHMENT 5

FOR REFERENCE ONLY

PLAN VIEW SCALE: NONE 1

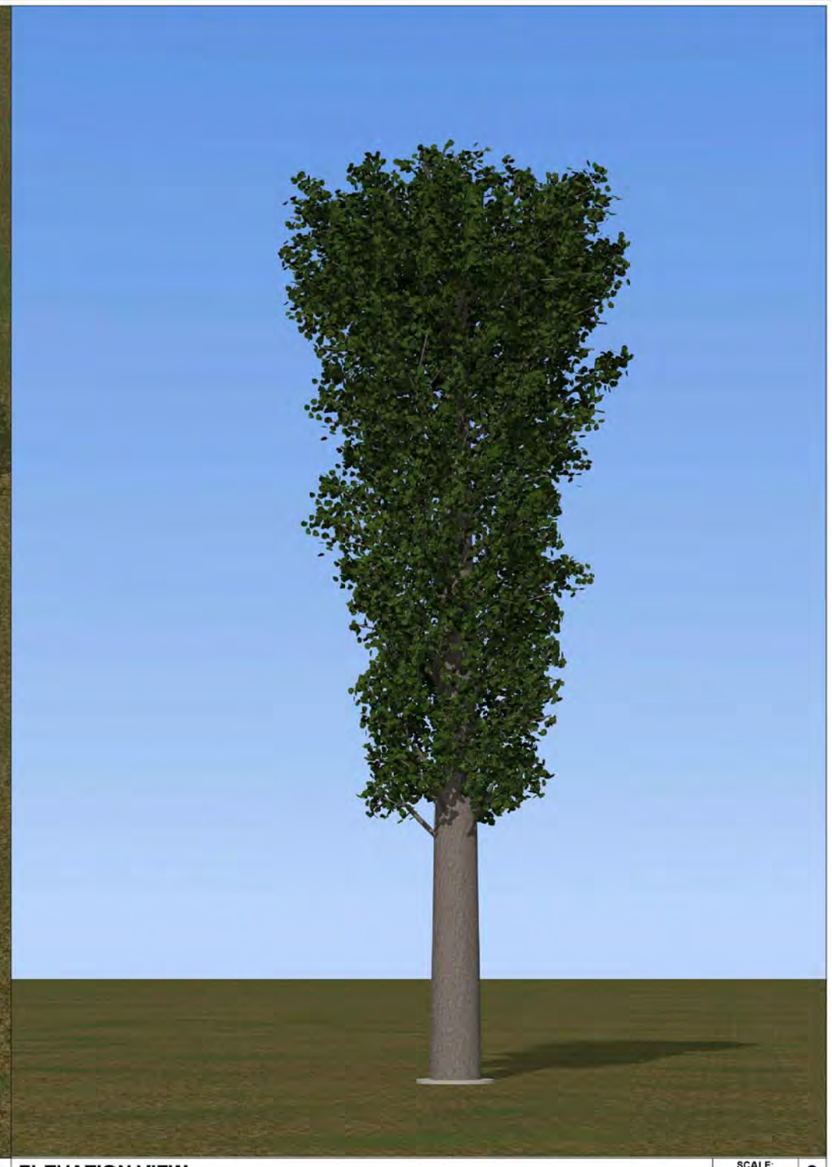

ELEVATION VIEW SCALE: NONE 2

CONSULTANT

SCI
SOLAR COMMUNICATIONS INTERNATIONAL, INC.
41745 ANZA ROAD
Temecula, CA 92592
Tel: (951) 698-5985
www.RFTransparent.com

COPYRIGHT 2008 SOLAR COMMUNICATIONS INTERNATIONAL, INC. THESE MATERIALS ARE PROTECTED BY UNITED STATES COPYRIGHT LAW AND MAY NOT BE REPRODUCED, DISTRIBUTED, TRANSMITTED, DISPLAYED, OR PUBLISHED WITHOUT THE PRIOR WRITTEN PERMISSION OF SOLAR COMMUNICATIONS INTERNATIONAL, INC. YOU MAY NOT ALTER OR REMOVE ANY TRADEMARK, COPYRIGHT OR OTHER NOTICE FROM COPIES OF THIS CONTENT.

CLIENT

PROJECT
RFTRANSPARENT WATER TANK

LOCATION
ISLAND VIEW MARKET
#824829
5080 LOGAN AVE
SAN DIEGO, CA 92113
SAN DIEGO COUNTY

ISSUED FOR
PRODUCTION

| DW'N BY | CK'D BY | DATE |
|---|---|---|
| OPM | LEM | 21MAR18 |

REVISIONS

| REV. | CHANGES | DATE | BY |
|---|---|---|---|
| A | EUC DESING | 27MAR20 | LE |
| B | ANTENNA LAYOUT UPDATE | 12JUN20 | OPM |

ENGINEER SEAL

SHEET TITLE
PERSPECTIVE & ISOMETRIC VIEW

WSC PROJECT NUMBER

DRAWING NUMBER

PAGE NUMBER
RF-2

T-Mobile
10509 VISTA SORRENTO PKWY, STE 206
SAN DIEGO, CA 92121

CROWN CASTLE
200 SPECTRUM CENTER DR, SUITE 1700
IRVINE, CA 92618

M SQUARED WIRELESS
1387 CALLE AVANZADO
SAN CLEMENTE CA 92673 (949) 391-6824

DRAWN BY: BM
CHECKED BY: MM

| REV | DATE | DESCRIPTION | BY |
|---|---|---|---|
| 5 | 08/07/2020 | 100% ZD'S - REVISED - JX | SD |
| 4 | 07/20/2020 | 100% ZD'S - REVISED - JX | RDL |
| 3 | 07/06/2020 | 100% ZD'S - REVISED - JX | RDL |
| 2 | 05/29/2020 | 100% ZD'S - REVISED - JX | RN |
| 1 | 05/08/2020 | 100% ZD'S - REVISED | RDL |
| 0 | 04/24/2020 | 100% ZD'S FOR SUBMITTAL | RDL |
| A | 04/20/2020 | 90% ZD'S FOR REVIEW | RDL |

IT IS A VIOLATION OF LAW FOR ANY PERSON, UNLESS THEY ARE ACTING UNDER THE DIRECTION OF A LICENSED PROFESSIONAL ENGINEER, TO ALTER THIS DOCUMENT.

SD06808A - CUP RENEWAL
CROWN CASTLE SITE ID: 824829
ISLAND VIEW MARKET
5080 LOGAN AVE.
SAN DIEGO, CA 92113
MONO-EUCALYPTUS

SHEET TITLE
3D RENDER
PERPECTIVE & ISOMETRIC VIEW

SHEET NUMBER
RF-6

3D RENDER - PERPECTIVE AND ISOMETRIC VIEW - SCI

24"x36" SCALE: NTS
11"x17" SCALE: NTS

1