PRELIMINARY SEWER STUDY

PLAZA LA MEDIA NORTH
OTAY MESA COMMUNITY, SAN DIEGO, CA

PLANNED DEVELOPMENT PERMIT NO. 1174331
NEIGHBORHOOD DEVELOPMENT PERMIT NO. 1174329
SITE DEVELOPMENT PERMIT NO. 1174334
RIGHT-OF-WAY VACATION NO. 1174332
VESTING TENTATIVE MAP NO. 1174336
NEIGHBORHOOD DEVELOPMENT PERMIT NO. 1174327

PTS 334235
SAN DIEGO, CALIFORNIA

Original Date: 12/12/16
Revision Date: 8/31/17
Revision Date: 8/6/18
Revision Date: 11/07/18
Revision Date: 02/22/19
FINAL Date: 03/19/19

Prepared For:
Plaza La Media
La Media & Airway, LLC, an Arizona Limited Liability Corporation
2700 West Sahara Avenue
Las Vegas, NV 89102

Prepared By:
KETTLER LEWECK
ENGINEERING
303 A Street, Suite 302
San Diego, California 92101
(619) 269-3444

REGISTERED PROFESSIONAL ENGINEER
STEVEN C. KETTLER
No. C48358
Exp. 6/30/2020
CIVIL
STATE OF CALIFORNIA

S. C. Kettler

Steven C. Kettler RCE 48,358
Registration Expires 6-30-2020

TABLE OF CONTENTS

LIST OF FIGURES

LIST OF TABLES

EXHIBITS

APPENDICES

1.0 INTRODUCTION

This preliminary sewer study has been prepared as part of the City of San Diego's Discretionary Permit Application process. For the purposes of this sewer study, Plaza La Media North will be referred to as the 'Project'. The Project occupies approximately 17.6 gross acres of land for commercial development use. Off-site public improvements for roads and utilities are also included. Currently the project is zoned heavy commercial.

This preliminary sewer study utilized public records to identify the approximate location and size of existing public sanitary sewer mains adjacent to the Project site. In addition, this sewer study provides preliminary locations of the proposed building layouts and approximate locations and sizes of the proposed private sewer mains, sewer laterals, and preliminary estimates of peak sewer flows. It is understood that the City of San Diego (i.e. Public Utilities Department) will determine if the existing sewer mains located adjacent to the proposed project have the adequate capacity to support the proposed Project.

2.0 PROJECT INFORMATION

2.1 Project Location

The Project is within the Otay Mesa Community of the City of San Diego. The Project is located north of SR-905, east of La Media Road, and south of Otay Mesa Road. The area to the east of the Project is vacant land.

Refer to Figure 1 on the following page.

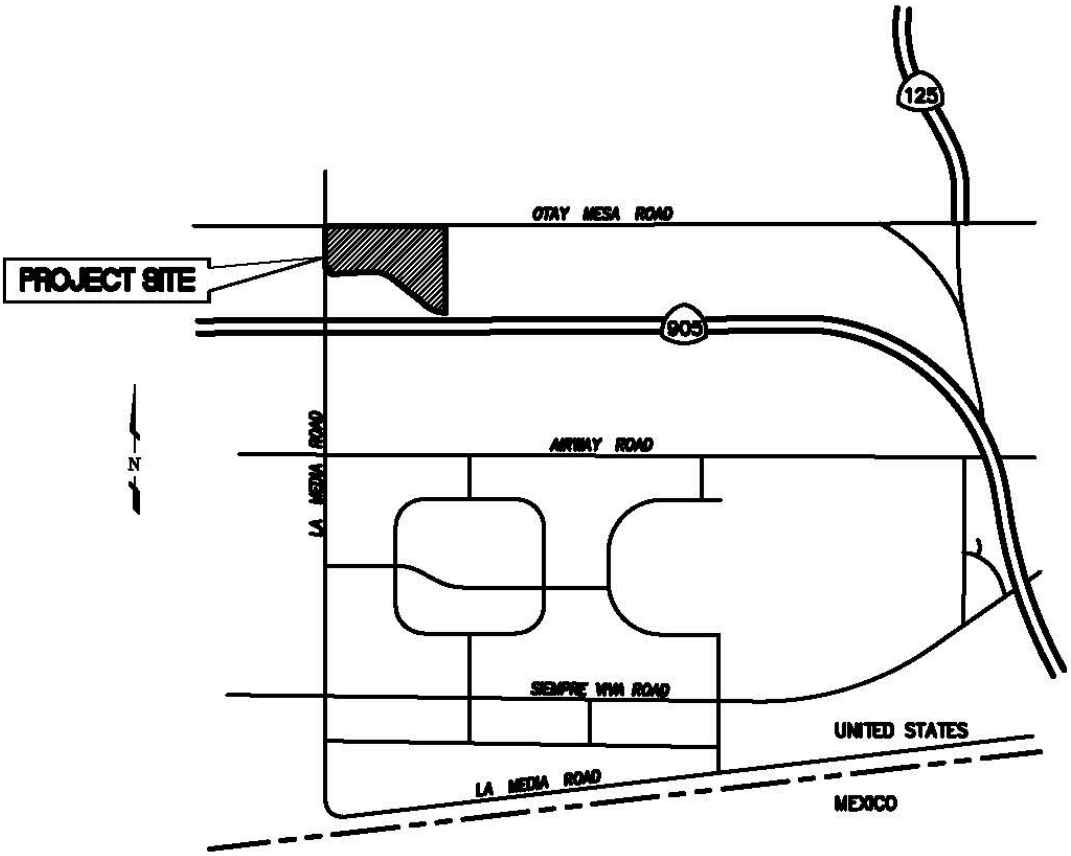

FIGURE 1 – VICINITY MAP

2.2 Project Description

The Project is a proposed commercial project. The Project proposes to create a total of twelve (12) lots. Ten (10) lots will contain proposed buildings. The remaining two (2) lots are for stormwater BMPs. Access to the Project will be from the adjacent public streets. Internal access to and across the various lots will be via private reciprocal access easement(s). All the proposed sewer mains and laterals will be private. Refer to Exhibit 'A' for the location of the existing and proposed sewer facilities.

The proposed buildings are included in Table No. 1, page 3.

Table No. 1
PROPOSED BUILDING DESCRIPTION

Building Designation	Building Description – North Parcel	Net Lot Area (Ac)
A	Grocery	4.1
B	Major – Retail	1.4
C	Major – Retail	1.0
D	Shops – Retail	1.5
E	Shops – Retail	1.5
F	Major – Retail	1.6
G	Pharmacy	1.6
H	Drive-Thru Restaurant	0.9
J	Drive-Thru Restaurant	1.1
K	Gas Station – C Mart	1.4
TOTAL		**16.1**

3.0 EXISTING CONDITION

Although the project site is vacant, existing public sewer exists in the adjacent public streets. Specifically, a 21-inch VCP sewer exists in Otay Mesa Road (Drawing Number 23168-D). An existing 8-inch PVC (Drawing Number 29348-D) and a 30-inch VCP sewer (Drawing Number 23168-D) exist in La Media Road. The 8-inch PVC sewer exists on the west side of Le Media Road and the 30-inch sewer exists near the center of La Media Road. The sewer in Otay Lakes Road flows east to west and the sewer in La Media flows north to south.

Refer to Exhibit "A" for the location of the Existing and Proposed Sewer Facilities.

4.0 PROPOSED CONDITION

The Project proposes private sewer mains and private sewer laterals.

Private Sewer System No. 1

This Sewer System includes private 6-inch, 8-inch and 10-inch PVC sewer mains (sizes to be confirmed during final engineering) and 4-inch and 6-inch private sewer laterals. The private mains are proposed in the main private drive aisles that generally traverse the site in the east-west direction as well as one reach within the right-of-way of La Media Road. The private sewer reach within La Media connects to the existing public 30-inch VCP sewer. It is understood that the City will require an Encroachment Maintenance and Removal Agreement (EMRA) for the proposed private sewer connecting to the proposed "public" sewer at the proposed public manhole (5' x 3' per SDS-106 with T-lock). In addition, a P-Trap installed upstream of private manhole #1 on private property will be required. The private sewer laterals are proposed to collect and convey sewer from the various proposed buildings (i.e. Buildings "A"- "H", "J", and "K") to the proposed private sewer mains.

Refer to Exhibit "A" for the Existing and Proposed Sewer Facilities.

5.0 HYDROLOGY AND HYDRAULIC METHODOLOGY

Hydrology Methodology

Recognizing that the proposed project is in the Discretionary phase, an estimate of dry weather sewer flows by building was developed using the Equivalent Population for each lot based on Table 1-1 of the City of San Diego Sewer Design Guide. After the population for each lot was determined, the average dry weather flows were calculated utilizing a rate of 80 gal/person/day. See Table No. 2 for these flows.

Table No. 2
Preliminary Proposed Hydrology/Sewer Flows by Building

BUILDINGS	Area	Net Acreage	Population Per DU	Equivalent Population	Total Population	Average Dry Weather Flow		Lateral POC to Public Main
	(Ac)	(Ac)		(Pop/Net Ac)		(gpcpd)	(cfs)	Reach
A								
GROCERY STORE	4.10	4.10	3.50	43.70	179	14,333.60	0.0215	MH 7 to MH 6
Lot 1								
B								
MAJOR RETAIL	1.40	1.40	3.50	43.70	61	4,894.40	0.0073	MH 7 to MH 6
Lot 2								
C								
MAJOR RETAIL	1.00	1.00	3.50	43.70	44	3,496.00	0.0052	MH 7 to MH 6
Lot 3								
D AND J								
RETAIL SHOP and DRIVE-THRU RESTAURANT	2.60	2.60	3.50	43.70	114	9,089.60	0.0136	MH 5 to MH 4
Lot 4								
E, F, and H								
RETAIL SHOP, MAJOR RETAIL, AND DRIVE THRU RESTAURANT	4.00	4.00	3.50	43.70	175	13,984.00	0.0210	MH 4 to MH 3
Lot 5								
G								
PHARMACY	1.60	1.60	3.50	43.70	70	5,593.60	0.0084	MH 3 to MH 2
Lot 6								
K								
GAS WITH C-STORE AND CAR WASH	1.40	1.40	3.50	43.70	61	4,894.40	0.0073	MH 8 to MH 5
Lot 10								
TOTALS	**16.10**	**16.10**			**704**		**0.0844**	

Net Acreage = Gross Acreage less Public Right-of-ways

To develop the Dry Weather Peaking Factor, the discharge point for each lot was determined. The discharge point (POC) from Table No. 2 above was used to determine the population and associated Average Dry Weather Flows within each reach of the proposed private sewer system. Based on the population, a Peaking Factor based on Figure 1-1 of the City's Sewer Design Guide was applied to the Average Dry Weather Flows. The resulting Peak Dry Weather Flows are shown in Table No. 3 below.

Table No. 3
Preliminary Peak Sewer Flow Estimates

Reach	Average Dry Weather Flow (cfs)	Total Population	Dry Weather Peaking Factor	Peak Dry Weather Flow (cfs)
MH 8- MH 5 (Private)	0.0073	61	4.00	0.03
MH 7- MH 6 (Private)	0.0341	284	3.72	0.13
MH 6- MH 5 (Private)	0.0341	284	3.72	0.13
MH 5- MH 4 (Private)	0.0551	459	3.17	0.17
MH 4- MH 3 (Private)	0.0760	634	2.89	0.22
MH 3- MH 2 (Private)	0.0844	704	2.83	0.24
MH 2- MH 1 (Private)	0.0844	704	2.83	0.24
MH 1- LA Media Rd (Private)	**0.0844**	**704**	**2.83**	**0.24**

Hydraulic Methodology

This Preliminary Sewer Study also evaluated the hydraulics of the proposed 10-inch public sewer main. The existing public 30-inch VCP in La Media Road was not evaluated. It is understood that the City of San Diego will confirm the capacity of these trunk sewer facilities.

The following City of San Diego hydraulic requirements/standards for public sewer mains were used evaluated the private sewer from MH-1 to La Media Road:

- The ratio of depth of flow in the main (dn) to the diameter of main (D) or dn/D < 0.5 for dry weather flows
- The minimum cleansing velocity (V) is greater than or equal to 2 feet per second or V ≥ 2 f.p.s.

Note: Wet weather flows were not analyzed.

Table No. 4 summarizes the preliminary hydraulic calculations for the proposed 10-inch public sewer main.

Table No. 4
Summary of Preliminary Hydraulic Calculations

Description	Slope (ft/ft)	Discharge (cfs)	Pipe Dia. (ft)	Manning's Coefficient	Sc (ft/ft)	Velocity (fps)	Vc (fps)	Depth (ft)	d/D	Dc (ft)		Check for Depth>1.8	Max. Possible Dischage (cfs)
MH 1 to La Media Rd (Private Sew er)	0.010	0.240	0.83	0.013	0.0054	2.6	2.12	0.19	0.23	0.22	2	OKAY	2.32

6.0 DISCUSSION AND CONCLUSIONS

The preliminary analysis of the proposed private sewer system demonstrates compliance with the City of San Diego's requirements. Private Sewer System #1, discharging to the Public 30" VCP Sewer in La Media Road. Reach #1 (private) will have a peak dry weather flow of 0.24 cfs upon buildout of this project. Within this reach, the d/D will be 0.23, lower than the 0.5 guideline from the City. The velocity within this system is 2.32 cfs. Although private sewer, these are above the City's minimum velocity of 2.0 fps. An Encroachment Maintenance and Removal Agreement (EMRA) will be required for the private sewer connection to the public manhole in La Media Road. In addition, a P-Trap installed upstream of private manhole #1 on private property will required.

APPENDIX A

CITY OF SAN DIEGO SEWER DESIGN GUIDE, 2013 (Excerpts only)

TABLE 1-1
CITY OF SAN DIEGO SEWER DESIGN GUIDE
DENSITY CONVERSIONS (Continued)

Zone	Maximum Density (DU / Net Ac)	Population Per DU	Equivalent Population (Pop/Net Ac)
Schools/Public	8.9	3.5	31.2
Offices	10.9	3.5	38.2*
Commercial/Hotels	12.5	3.5	43.7*
Industrial	17.9	3.5	62.5*
Hospital	42.9	3.5	150.0*

Figures with asterisk (*) represent equivalent population per floor of the building.

Definitions:
DU = Dwelling Units
Ac = Acreage
Pop = Population

Net Acreage is the developable lot area excluding areas that are dedicated as public streets in acres. Gross Area is the entire area in acres of the drainage basin, including lots, streets, etc.

For undeveloped areas, assume Net Acreage = 0.8 x Gross Area in Acres

For developed areas, calculate actual Net Acreage.

Tabulated figures are for general case. The tabulated figures shall not be used if more accurate figures are available.

Population is based on actual equivalent dwelling units (EDU) or the maximum estimate obtained from zoning.

Conversion of Fixture Units to Equivalent Dwelling Units (EDU): The Water Meter Data Card, maintained by the Development Services Department, contains a table of plumbing fixtures that should be used for determining the equivalent dwelling units (EDU's) for the purpose of estimating the rate of wastewater generation in residential, commercial, or industrial areas. Currently, the basis for conversion is: 20 fixtures = 1 EDU and 1 EDU = 280 gallons of wastewater per day.

In high rise building areas, flow rates shall be based on the most current, adopted edition of the applicable Plumbing Code, assuming one lateral per area. The most conservative flow rate shall govern.

PUBLIC UTILITIES DEPARTMENT

PEAKING FACTOR FOR SEWER FLOWS
(Dry Weather)

Ratio of Peak to Average Flow*
Versus Tributary Population

Population	Ratio of Peak to Average Flow	Population	Ratio of Peak to Average Flow
200	4.00	4,800	2.01
500	3.00	5,000	2.00
800	2.75	5,200	1.99
900	2.60	5,500	1.97
1,000	2.50	6,000	1.95
1,100	2.47	6,200	1.94
1,200	2.45	6,400	1.93
1,300	2.43	6,900	1.91
1,400	2.40	7,300	1.90
1,500	2.38	7,500	1.89
1,600	2.36	8,100	1.87
1,700	2.34	8,400	1.86
1,750	2.33	9,100	1.84
1,800	2.32	9,600	1.83
1,850	2.31	10,000	1.82
1,900	2.30	11,500	1.80
2,000	2.29	13,000	1.78
2,150	2.27	14,500	1.76
2,225	2.25	15,000	1.75
2,300	2.24	16,000	1.74
2,375	2.23	16,700	1.73
2,425	2.22	17,400	1.72
2,500	2.21	18,000	1.71
2,600	2.20	18,900	1.70
2,625	2.19	19,800	1.69
2,675	2.18	21,500	1.68
2,775	2.17	22,600	1.67
2,850	2.16	25,000	1.65
3,000	2.14	26,500	1.64
3,100	2.13	28,000	1.63
3,200	2.12	32,000	1.61
3,500	2.10	36,000	1.59
3,600	2.09	38,000	1.58
3,700	2.08	42,000	1.57
3,800	2.07	49,000	1.55
3,900	2.06	54,000	1.54
4,000	2.05	60,000	1.53
4,200	2.04	70,000	1.52
4,400	2.03	90,000	1.51
4,600	2.02	100,000+	1.50

***Based on formula:** **Peak Factor = 6.2945 x $(pop)^{-0.1342}$**
(Holmes & Narver, 1960)

FIGURE 1-1

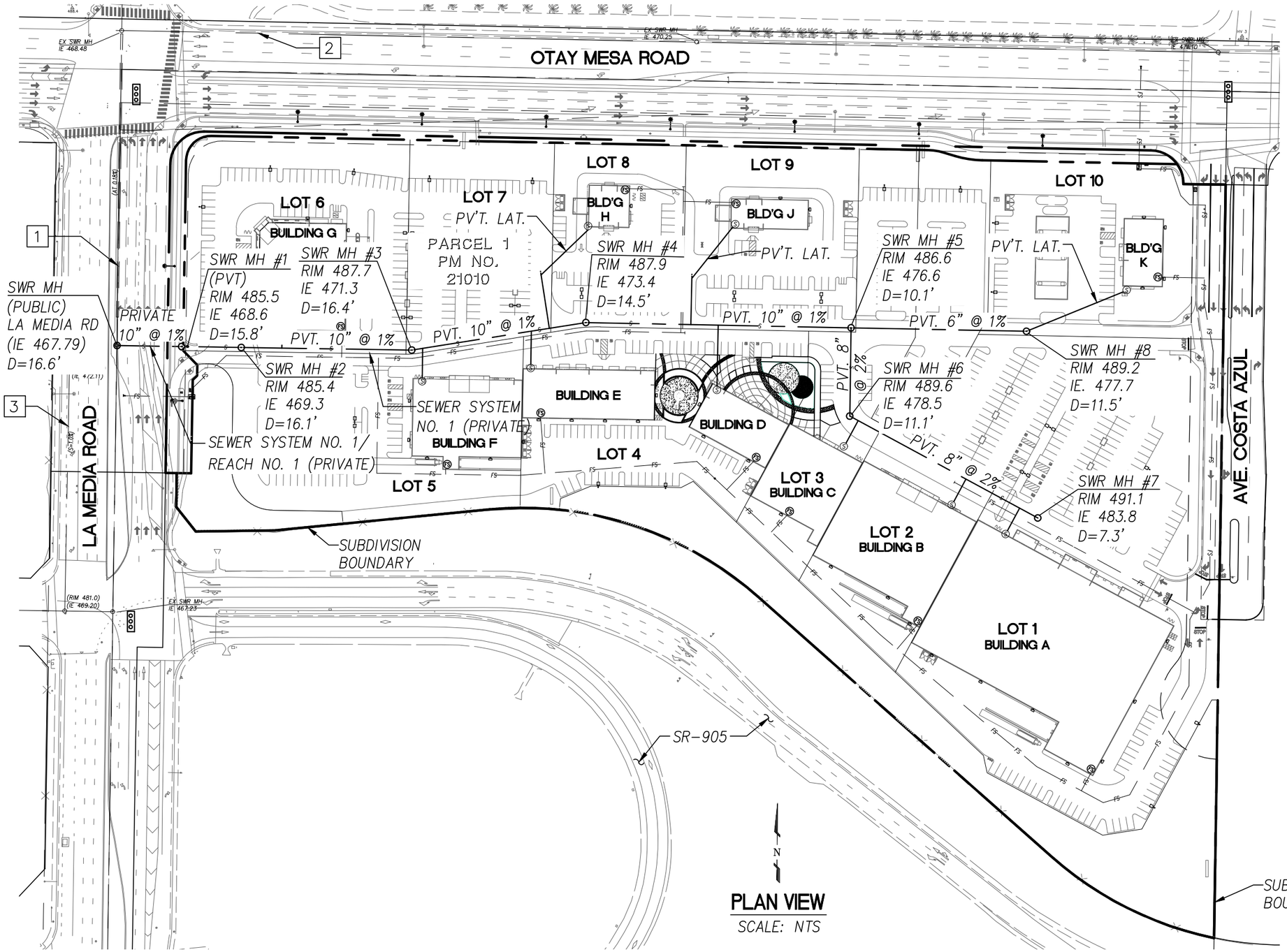

PLAN VIEW

SCALE: NTS

KEY NOTES

1. EXISTING 30" VCP SEWER PER DWG 23168-D
2. EXISTING 21" VCP SEWER PER DWG 23168-D
3. EXISTING 8" VCP SEWER PER DWG 29348-D

NOTES

1. ALL PROPOSED SEWER EXCEPT FOR THE MANHOLE IN LA MEDIA ROAD IS PRIVATE.
2. THE REACH FROM SEWER MANHOLE LA MEDIA ROAD (PUBLIC) TO SEWER MANHOLE NO. 1 (PRIVATE) IS PRIVATE.
3. AN ENCROACHMENT MAINTENANCE AND REMOVAL AGREEMENT (EMRA) IS REQUIRED FOR THE PROPOSED PRIVATE SEWER CONNECTING TO THE EXISTING PUBLIC SEWER SYSTEM/MANHOLE.
4. THE SIZE OF THE PROPOSED PRIVATE SEWER SHOWN HEREON IS SUBJECT TO CHANGE DURING THE MINISTERIAL PERMIT PROCESS(ES).
5. P-TRAP REQUIRED UPSTREAM OF PRIVATE MANHOLE #1 ON PRIVATE PROPERTY.
6. THE PROPOSED PUBLIC MANHOLE AT THE CONNECTION TO THE EXISTING PUBLIC TRUNK SEWER (I.E. 30" VCP) IN LA MEDIA ROAD SHALL BE A 5'X3' MANHOLE PER SDRSD-106 WITH T-LOCK.

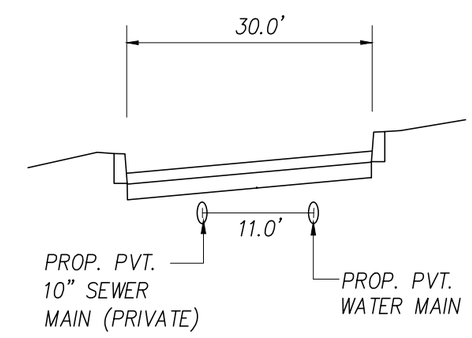

WET UTILITIES SEPARATION (TYP)

NO SCALE

KETTLER LEWECK
ENGINEERING
303 A STREET, SUITE 302
SAN DIEGO, CA 92101
t: 619 269-3444 | f: 619 269-3459
www.kettlerleweck.com

0028 - PLAZA LA MEDIA - NORTH
02/22/2019

EXHIBIT 'A' - SANITARY SEWER EXHIBIT

Sewer Study

Plaza La Media North - Industrial Alternative

City of San Diego

Site Development Permit/ Tentative Map
Project No. 334235

July 2020

Prepared for:
Las Vegas Sunset Properties
2700 W. Sahara Ave
Las Vegas, NV 89102

Prepared by:
Kimley-Horn and Associates, Inc.
401 B Street, Suite 600
San Diego, CA 92101

195208003

SEWER STUDY FOR

Plaza La Media North - Industrial Alternate

July 2020

Michael J. Knapton Exp. Date 9/30/21

R.C.E. 65627

TABLE OF CONTENTS

APPENDICES

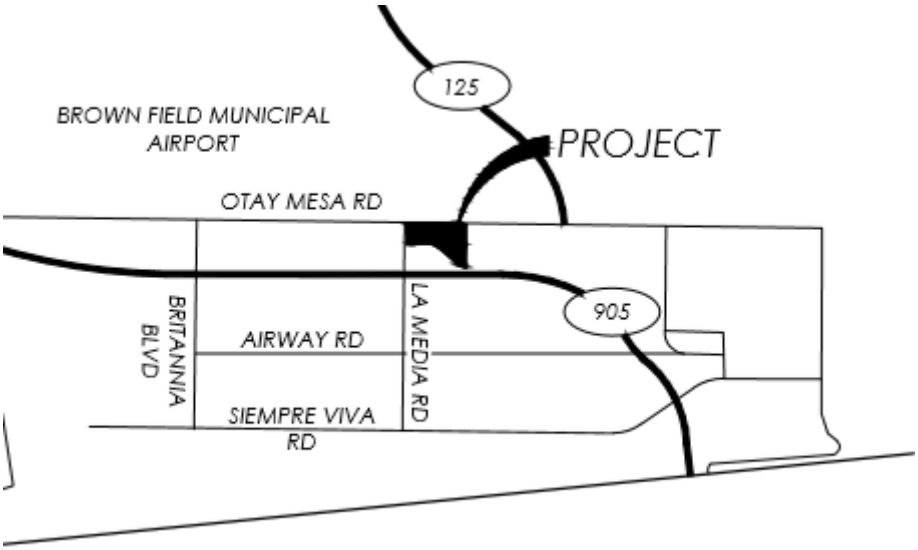
125
BROWN FIELD MUNICIPAL
AIRPORT
PROJECT
OTAY MESA RD
905
BRITANNIA
BLVD
AIRWAY RD
LA MEDIA RD
SIEMPRE VIVA
RD

1. Introduction/Project Description

The existing mapped lot will be subdivided per this proposed entitlement. The proposed project involves the development of two industrial warehouse buildings, roughly 283,000 square feet of space, on a 17.6-acre parcel located south of Otay Mesa Road, east of La Media Road, and North of SR-905. The existing and proposed zoning for the site is IL-3-1.

The design for this private sewer system is a gravity fed system that sewers Building 1 (western half) north into existing public main located in Otay Mesa Road. Building 2 (east half of the project) will sewer to the private sewer main within Landmark Road (private drive) where it combines flows with the adjacent Otay Sunroad 50 project. Flows then travel north and connect into the existing main in Otay Mesa Road.

As this project does not have identified tenants, the process to derive expected Equivalent Dwelling Units (EDU's) was to take other typical industrial warehouse buildings constructed in Southern California and assign fixture unit counts on the City of San Diego Water Meter Data Card. From this, a ratio of 20 fixture units per 1 EDU was applied. The project is thereby estimated to yield a maximum of 12 EDU's at full buildout. This EDU count is far less than the allowable sewer generation for industrially-zoned land, but in-line with expected sewer demand of similar projects. The project flows to City of San Diego sewer pump station 23T, which has available capacity for the project. The project will pay its fair share and sewer surcharge fees at the time of building permit issuance for the diminished capacity due to this project at that pump station.

In the event a tenant has sewer needs exceeding the cumulative 12 EDU's for the project, the owner will submit for a Substantial Conformance Review specific to sewer, so the request can be vetted against the capacity available at sewer pump station 23T. If sufficient capacity exists for the additional proposed EDU's, fair share costs would be paid. In the event the requested EDU's are substantial; a sewer basin analysis may be required to demonstrate the effect of the project on capacity and may require the developer to fund or install components to upgrade the capacity of the pump station.

Design of the proposed sewer system is consistent with the design parameters as outlined in the *City of San Diego - Sewer Design Guide, May 2015*.

Appendices

Appendix A ~ Sewer Flow Generation Calculations

KIMLEY-HORN AND ASSOCIATES
SAN DIEGO, CALIFORNIA

SEWER STUDY SUMMARY FOR:
LA MEDIA NORTH - INDUSTRIAL ALTERNATIVE

JOB NO. 195208003
DATE: 7/28/20

PROJECT ENGINEER: Michael Knapton
PREPARED BY: MK

ENTER NUMBER OF NODES TO ANALYZE: 6

Update

Calculate

REACH	FROM MH	TO MH	NUMBER OF RESIDENTIAL DWELLING UNITS	POP. PER DWELLING UNIT	POP. INLINE	SERVED TOTAL	PEAK DESIGN FLOW			LINE SIZE (INCHES)	MINIMUM SLOPE (%)	DESIGN SLOPE (%)	dn(ft)	dn/D	VELOCITY (fps)	COMMENTS
							PEAK/AVG RATIO	M.G.D.	CFS							
LMN	BLDG2	PVT2	6.0	3.5	21.0	21.0	4.00	0.007	0.010	8	0.844%	2.00	0.04	0.06	1.35	End Network 1
SRD	PH2 SRD	PVT2	12.0	3.5	42.0	42.0	4.00	0.013	0.021	8	0.463%	1.00	0.06	0.09	1.31	End Network 2
LMN	PVT2	PVT1	0.0	3.5	0.0	63.0	4.00	0.020	0.031	8	0.327%	0.50	0.09	0.13	1.16	Confluence of Networks
PVT 12	PVT1	PUB1a	0.0	3.5	0.0	63.0	4.00	0.020	0.031	12	0.383%	1.48	0.06	0.06	1.60	End Network 3
BLDG1	BLDG1	PVT3	6.0	3.5	21.0	21.0	4.00	0.007	0.010	8	0.844%	2.00	0.04	0.06	1.35	
BLDG1	PVT3	PUB1	0.0	3.5	0.0	21.0	4.00	0.007	0.010	8	0.844%	2.00	0.04	0.06	1.35	

Map Pocket No. 1 ~ Plaza La Media North - Industrial Alternate
Proposed Sewer Exhibit

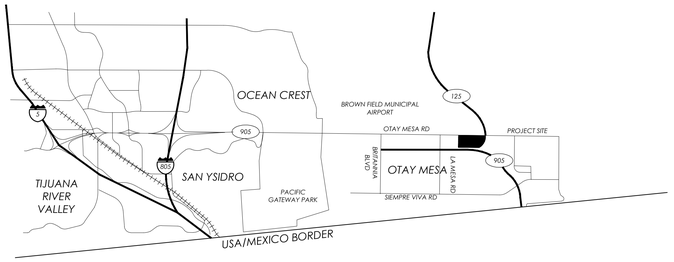

VICINITY MAP
N.T.S.

LEGEND

PROJECT BOUNDARY	
SEWER SHED LIMITS	
PROPOSED PRIVATE SEWER MAIN	S
EXISTING SEWER MAIN	S
EXISTING RECLAIMED WATER MAIN	RCW
EXISTING WATER MAIN	W
PROPOSED WATER MAIN	W
PROPOSED RECLAIMED WATER MAIN	RCW
PROPSED STORM DRAIN	SD
DIRECTION OF FLOW	
PROPOSED PRIVATE SEWER LATERAL	
PROPOSED MANHOLE	MH
EXISTING MANHOLE	

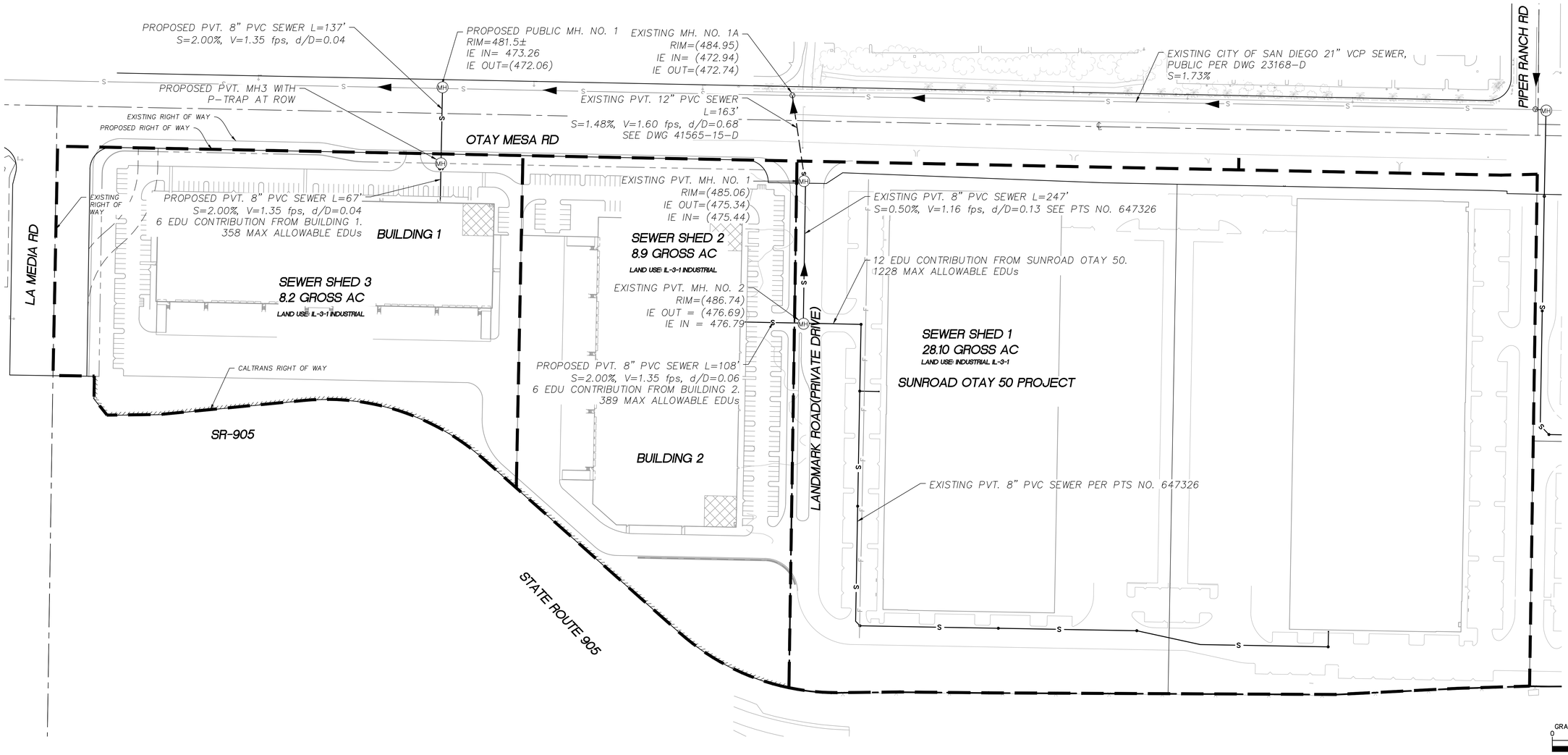

JULY 2020

Kimley»Horn
401 B Street - Suite 600 San Diego, Ca. 92101
Tel: (619) 234-9411

PROPOSED SEWER EXHIBIT
PLAZA LA MEDIA NORTH - INDUSTRIAL ALTERNATIVE

K:\SND_LDEV\195208003 - Majestic La Media North\Sewer\Sewer Study\Exhibit\Proposed Sewer Exhibit.dwg 7-28-20-10:58 AM