LINSCOTT
LAW &
GREENSPAN
engineers

TRANSPORTATION IMPACT ANALYSIS

USD MASTER PLAN UPDATE

San Diego, California
November 8, 2016

LLG Ref. 3-14-2341

Prepared by:
Amelia Giacalone
Transportation Planner III

Under the Supervision of:
John Boarman, P. E.
Principal

Linscott, Law & Greenspan, Engineers
4542 Ruffner Street
Suite 100
San Diego, CA 92111
858.300.8800 T
858.300.8810 F
www.llgengineers.com

EXECUTIVE SUMMARY

The University of San Diego (USD) is located north of Linda Vista Road in the Linda Vista Community of San Diego, between Marian Way and Via Las Cumbres. The Project proposes to expand enrollment to a total of 10,000 FTE students by 2035, an increase of 3,000 FTE students as compared to the current 7,000 FTE maximum per the existing CUP. A study area covering a major portion of the Linda Vista Community including 27 intersections, 26 segments and two freeway main line segments was studied under Existing, Near-Term (2019) and Long-Term (2035) conditions.

Various sources for the trip generation rates for the University land use were reviewed. It was ultimately determined that two different trip rates would be applied to the analysis: 3.4 ADT / FTE for Near-Term (2019) conditions (assuming only a portion of the additional FTE and partial buildout of the Project); and 3.1 ADT / FTE for Long-Term conditions (assuming the entire 3,000 additional FTE and buildout of the Project) which takes into consideration the University's second year housing requirement which has been newly imposed and requires all second year students to live on campus.

Using these rates, the Project is calculated to generate 2,550 ADT with 153 AM peak hour trips (138 inbound / 15 outbound) and 204 PM peak hour trips (82 inbound / 122 outbound) under Near-Term (2019) conditions, and 9,300 ADT with 558 AM peak hour trips (502 inbound / 56 outbound) and 744 PM peak hours trips (298 inbound / 446 outbound) under Long-Term (2035) conditions.

Based on the City of San Diego significance criteria, the Project is calculated to contribute to direct and cumulative impacts in the City of San Diego, as summarized below and discussed further in *Section 12* of this study:

Near-Term (2019) Direct Impacts

Under Near-Term conditions, the Project is calculated to have significant direct impacts at three (3) study intersections and one (1) street segment. ***Table A*** summarizes the Project's direct impacts and recommended mitigation measures.

TABLE A
NEAR-TERM (2019) IMPACTS & MITIGATION MEASURES

Facility Type	Location	Mitigation
Intersections	DI-1: Linda Vista Road / Napa Street	The impact is considered significant and unmitigated under CEQA guidelines since it is not yet know what improvements may be implemented at the intersection, with several documents proposing inconsistent improvements and the forthcoming *Morena Corridor Specific Plan*. However, USD has agreed to contribute an amount of $297,000 (6.6% fairshare contribution) towards future improvements to the area. Payment of this contribution will partially mitigate the Project's significant impact. See *Section 12.2.1* for further discussion.
	DI-2: Linda Vista Road / Colusa Street	Signalize the intersection. It is also recommended, but not required to mitigate the Project's direct impact, to eliminate parking (approximately six spaces) along the east curb of Colusa Street to provide a dedicated 150-foot northbound left-turn lane and a dedicated northbound right-turn lane, such that right turning drivers do not need to wait behind left turning vehicles.
	DI-3: Linda Vista Road / Alcala Apartments Entrance	**Option A:** If warranted by the mitigation monitoring program, signalize the intersection and provide a dedicated southbound left turn lane and a dedicated southbound right turn lane. Coordinate the signal with the downstream signal at Via las Cumbres to the east. **Option B:** If warranted by the mitigation monitoring program, restrict left-turns out of the Alcala Apartments Entrance by constructing a raised median within Linda Vista Road.

TABLE A
NEAR-TERM (2019) IMPACTS & MITIGATION MEASURES

Facility Type	Location	Mitigation
Street Segments	DI-4: Linda Vista Road - Napa Street to Marian Way	The impact is considered significant and unmitigated under CEQA guidelines since it is not yet known what improvements may be implemented in the area, with several documents proposing inconsistent improvements and the forthcoming *Morena Corridor Specific Plan*. However, as noted above for impact DI-1, USD has agreed to contribute an amount of $297,000 (6.6% fairshare contribution) towards future improvements to the area. Payment of this contribution will partially mitigate the Project's significant impact. See *Section 12.2.1* for further discussion.

Long-Term (Year 2035) Cumulative Impacts

Under Long-Term (Year 2035) conditions, the Project is calculated to have significant cumulative impacts at three (3) study intersections and one (1) street segment. ***Table B*** summarizes the Project's cumulative impacts and recommended mitigation measures.

TABLE B
YEAR 2035 IMPACTS & MITIGATION MEASURES

Facility Type	Location	Mitigation
Intersections	CI-1: Linda Vista Road / Napa Street	Partially mitigated as summarized above in *Table A*. See *Section 12.2.1* for further discussion.
	CI-2: Linda Vista Road / Colusa Street	Implementation of mitigation measure DI-2 in the Near-Term (summarized above in *Table A*) would mitigate the Project's significant impact.
	CI-3: Linda Vista Road / Alcala Apartments Entrance	Implementation of mitigation measure DI-3 in the Near-Term (summarized above in *Table A)* would mitigate the Project's significant impact.
Street Segments	CI-4: Friars Road: Avenida de las Tiendas to Ulric Street / SR 163 SB Ramps	Significant and unmitigated since there are no improvement projects towards which the Project can contribute a fairshare.

TABLE OF CONTENTS

SECTION PAGE

Executive Summary ..... **i**

Appendices ..... **vii**

List of Figures ..... **viii**

List of Tables ..... **ix**

1.0 Introduction **1**

2.0 Project Description **2**
- 2.1 Project Location 2
- 2.2 Project Background 2
- 2.3 Project Description 3

3.0 Trip Generation/Distribution/Assignment **7**
- 3.1 Trip Generation 7
- 3.2 Trip Distribution/Assignment 8

4.0 Study Area, Analysis Approach and Methodology **12**
- 4.1 Study Area 12
- 4.2 Analysis Approach 14
- 4.3 Methodology 14
  - 4.3.1 Signalized Intersections 14
  - 4.3.2 Un-signalized Intersections 17
  - 4.3.3 Street Segments 17
  - 4.3.4 Arterial Segments 18
  - 4.3.5 Ramp Meters 19
  - 4.3.6 Freeway Segments 19

5.0 Significance Criteria **21**

6.0 Analysis of Existing Conditions **23**
- 6.1 Existing Street Network 23
- 6.2 Existing Traffic Volumes 25
  - 6.2.1 Peak Hour Intersection Counts 25
  - 6.2.2 Daily Segment Counts 25
  - 6.2.3 Freeway Mainline Volumes 26
- 6.3 Analysis of Existing Conditions 28
  - 6.3.1 Intersection Operations 28
  - 6.3.2 Segment Operations 28

6.3.3 Ramp Meter Operations 28
6.3.4 Freeway Mainline Operations 29

7.0 Cumulative Projects 39

8.0 Analysis of Near-Term (2019) Scenarios 45
8.1 Near-Term Conditions 45
8.2 Near-Term Analysis 45
8.2.1 Intersection Analysis 45
8.2.2 Segment Operations 45
8.2.3 Ramp Meter Operations 46
8.2.4 Freeway Mainline Operations 46
8.3 Near-Term + Project Analysis 46
8.3.1 Intersection Analysis 46
8.3.2 Segment Operations 46
8.3.3 Ramp Meter Operations 47
8.3.4 Freeway Mainline Operations 48

9.0 Analysis of Long-Term (2035) Scenarios 58
9.1 Long-Term (2035) Conditions 58
9.2 Year 2035 Volumes 59
9.3 Year 2035 Analysis 60
9.3.1 Intersection Operations 60
9.3.2 Segment Operations 60
9.3.3 Ramp Meter Operations 60
9.3.4 Freeway Mainline Operations 61
9.4 Year 2035 + Project Analysis 61
9.4.1 Intersection Operations 61
9.4.2 Segment Operations 62
9.4.3 Ramp Meter Operations 63
9.4.4 Freeway Mainline Operations 63

10.0 Parking Assessment 75

11.0 Alternative Transportation Assessment 81
11.1 Pedestrians 81
11.2 Bicycles 82
11.3 Transit 82
11.4 TDM Measures 83

12.0 Significance of Impacts and Mitigation Measures 86
12.1 Significant Impacts Prior to Mitigation 86
12.1.1 Direct Impacts 86
12.1.2 Cumulative Impacts 86

12.2 Mitigation Measures 86
12.2.1 Direct Impacts 86
12.2.2 Cumulative Impacts 93
12.3 Sensitivity Analysis 95

APPENDICES

APPENDIX

A. Trip Generation Rates from: (1) City of San Diego, (2) The Traffic Circulation and Parking Report for the Proposed USD Master Plan EIR, April 19, 1996 , and (3) Memo dated May 3, 2010, Kimley Horn and Associates

B. Trip Generation Calculation Sheet

C. The SANDAG Select Zone Assignment Plot, Student and Employee Zip Code Data Figures

D. Intersection & Segment Manual Count Sheets and Signal Timing Sheets

E. Peak hour Intersection Analysis Worksheets – Existing

F. Peak hour Intersection Analysis Worksheets – Existing + Cumulative Projects

G. Peak hour Intersection Analysis and Arterial Analysis Worksheets – Existing + Cumulative Projects + Project

H. Year 2035 SANDAG Volume Plot

I. Peak hour Intersection Analysis Worksheets – Year 2035 Without Project

J. Peak hour Intersection Analysis and Arterial Analysis Worksheets – Year 2035 With Project

K. Supplementary Parking Assessment Information

L. Post-Mitigation Intersection Analysis Worksheets

M. Excerpts from the *Morena Boulevard Station Area Planning Study*

N. Signal Warrant Analysis

O. Mitigation Conceptual Figures

P. Sensitivity Analysis Information

Q. Figures from the USD Master Plan Update

R. Improvement Plans: Linda Vista Public Facilities Financing Plan and Caltrans Friars Road / SR 163 Interchange Plans

S. Cumulative Projects Information

T. Mitigation Monitoring Report Program

LIST OF FIGURES

SECTION—FIGURE # PAGE

Figure 2–1 Vicinity Map 4
Figure 2–2 Project Area Map 5
Figure 2–3 Site Plan 6
Figure 3–1 Project Traffic Distribution 9
Figure 3–2 Near-Term Project Traffic Volumes 10
Figure 3–3 Long-Term Project Traffic Volumes 11
Figure 6–1 Existing Conditions Diagram 37
Figure 6–2 Existing Traffic Volumes 38
Figure 7–1 Cumulative Projects Location Map 42
Figure 7–2 Near-Term (Existing + Cumulative Projects) Traffic Volumes 43
Figure 7–3 Near-Term (Existing + Cumulative Projects) + Near-Term Project Traffic Volumes . 44
Figure 8–1 Near-Term Network Improvements 57
Figure 9–1 Year 2035 Network Improvements 72
Figure 9–2 Year 2035 without Project Traffic Volumes 73
Figure 9–3 Year 2035 + Project Traffic Volumes 74
Figure 10–1 Existing Parking Supply Location Map 80
Figure 12–1 Near-Term Impacts and Mitigation Measures 96
Figure 12–2 Long-Term Impacts and Mitigation Measures 97

LIST OF TABLES

SECTION—TABLE # PAGE

Table A Near-Term (2019) Impacts & Mitigation Measures ii
Table B Year 2035 Impacts & Mitigation Measures iv
Table 3–1 Near-Term Project Trip Generation 8
Table 3–2 Long-Term Project Trip Generation 8
Table 4–1 Intersection Level of Service Descriptions 16
Table 4–2 Intersection LOS & Delay Ranges 16
Table 4–3 Level of Service Thresholds for Roadway Segments 18
Table 4–4 Arterial Analysis Definitions 19
Table 4–5 Freeway Segment Levels of Service 20
Table 5–1 City of San Diego Traffic Impact Significant Thresholds 22
Table 6–1 Existing Traffic Volumes 27
Table 6–2 Existing Intersection Operations 30
Table 6–3 Existing Segment Operations 33
Table 6–4 Existing Ramp Meter Operations 35
Table 6–5 Existing Freeway Mainline Operations 36
Table 7-1 Cumulative Projects – Near-Term (Year 2019) 40
Table 8–1 Near-Term Intersection Operations 49
Table 8–2 Near-Term Segment Operations 52
Table 8-2 (Continued) Near-Term Segment Operations 53
Table 8–3 Near-Term Ramp Meter Operations 54
Table 8–4 Near-Term Freeway Mainline Segment Operations 55
Table 8–5 Near-Term + Project Arterial Operations 56
Table 9-1 Long-Term (2035) Network Improvements 59
Table 9–2 Long-Term Intersection Operations 64
Table 9–3 Long-Term Segment Operations 67
Table 9–4 Long-Term Ramp Meter Operations 69
Table 9–5 Long-Term Freeway Mainline Segment Operations 70
Table 9–6 Long-Term + Project Arterial Operations 71
Table 10–1 USD On-Site Parking Occupancy Survey Summary 77
Table 10-2 Recommended Additional Parking Spaces per FTE 77

Table 12–1 Near-Term Intersection Mitigation Analysis 92
Table 12–2 Long-Term Intersection Mitigation Analysis 94
Table 12–3 Sensitivity Analysis Results..... 95

TRAFFIC IMPACT ANALYSIS

USD MASTER PLAN UPDATE

San Diego, California
November 8, 2016

1.0 INTRODUCTION

The following traffic study has been prepared to determine and evaluate the traffic impacts on the local circulation system due to the proposed USD Master Plan Update ("Project") in the City of San Diego. This traffic study analyzes intersections, street segments, and mainline freeway segments in the Project vicinity under Near-Term (2019) and Long-Term (2035) conditions to determine potential impacts related to the traffic generated by the proposed Project.

Included in this traffic study are the following:

- Project Description
- Existing Conditions
- Trip Generation/Distribution/Assignment
- Significance Criteria
- Analysis of Existing Conditions
- Cumulative Projects
- Study Area, Analysis Approach and Methodology
- Analysis of Near-Term (2019) Conditions
- Analysis of Long-Term (2035) Conditions
- Parking Assessment
- Alternative Transportation Assessment
- Significance of Impacts and Mitigation Measures
- Significant Impact Sensitivity Analysis

2.0 PROJECT DESCRIPTION

2.1 Project Location

The USD campus occupies approximately 180 acres of land devoted to university-related uses in the central portion of the City of San Diego (City), in the community of Linda Vista. The campus is located 4 miles north of downtown San Diego, approximately 0.5 mile east of Interstate 5 (I-5) and 0.5 mile north of Interstate 8 (I-8). Tecolote Canyon Natural Park forms the northern border of the property; Morena Boulevard is located to the west, with Via Las Cumbres bordering the campus on the east, and Linda Vista Road to the south. Elevations on campus range from approximately 50 feet above mean sea level (AMSL) to approximately 260 feet AMSL. With the exception of the steep, north-facing slopes along the northern campus border and the slopes on the western end of campus near Marian Way, the majority of the campus is developed and supports university facilities (buildings, parking lots, athletic fields, etc.) and associated landscaping.

Surrounding land uses include commercial/industrial development and residential housing in the Morena Boulevard area to the west of the campus, student and non-student multi-family housing immediately to the south and various types of residential development to the east. Tecolote Canyon Natural Park contains undeveloped regional open space to the north.

The Morena-Linda Vista Trolley Station is located less than a 1/2 mile away from the west campus entrance. USD also offers a free off-campus shuttle service between the Old Town Transit Center and the USD Campus.

Figure 2–1 depicts the Vicinity Map, and ***Figure 2–2*** depicts the Project Area Map.

2.2 Project Background

In 1996, USD received approval of its existing Master Plan to guide the phased buildout of the campus through the year 2030. The City issued Conditional Use Permit (CUP)/ Resource Protection Ordinance (RPO) Permit No. 92-0568 to allow the campus to construct 23 conceptual projects and expand student population to 7,000 FTE. Two future study areas were also identified in the Master Plan. The sequence of the projects was not determined at that time in order to provide flexibility with regard to economics and academic needs. The 1996 Master Plan EIR was prepared to assess the short- and long-term impacts of implementing the Master Plan and was certified in conjunction with the CUP approvals.

The Master Plan is a document that records the vision and goals of the physical campus. This vision for the campus is updated from time to time to reflect the changes in demographics and the economy that affect higher education. Most importantly, the Master Plan is required by the City as the basis for the university's CUP and to ensure the University's fulfillment of current regulations. Over the last several years, USD campus officials have been conducting vision planning and space planning exercises to address the future needs of the university. An update to the existing Master Plan is now proposed.

2.3 Project Description

The proposed USD Master Plan Update provides a comprehensive revision of the 1996 Master Plan and Design Guidelines, as well as the campus' building space and infrastructure needs associated with increasing enrollment from 7,000 full-time equivalent (FTE) students to 10,000 FTE over the next 20+ years. The USD Master Plan Update project would allow for the development of academic core/student service/ support uses and athletics and recreation uses, and additional student housing. Parking supply expansions would also occur under the proposed Master Plan Update.

Among the projects outlined in the Master Plan Update are 14 proposed construction sites, as well as 16 approved projects identified in the 1996 Master Plan EIR that have previous City review/approvals but remain unbuilt. The 14 proposed project sites would allow for the construction of academic/administrative buildings, student housing, student services uses, athletics/athletic support/administrative buildings, parking structures, pedestrian circulation and landscape improvements not contemplated in the 1996 Master Plan and related EIR. Design guidelines contained in the Master Plan Update would provide a comprehensive design framework to guide campus development. Other elements of the Master Plan Update address the planning context of the campus, provide an enrollment and space analysis, and identify sustainability goals.

The above-described improvements would require the following entitlements: an amended CUP to allow for the continued institutional use, a Site Development Permit (SDP) to allow impacts to Environmentally Sensitive Lands (ESL), and Multi-habitat Planning Area (MHPA) Boundary Line Correction to shift developed land out of the Multiple Species Conservation Program (MSCP) preserve.

This study specifically analyzes the impacts to the local circulation system associated with the proposed increase in FTE as opposed to specific infrastructure or planning changes that are proposed as a part of the Project.

The proposed increase in FTE is expected to occur gradually throughout the years, as specific Project related components are completed. Based on USD specific enrollment trends, FTE enrollment can be expected to increase by approximately 150 FTE per year. Therefore, for the purposes of Near-Term (2019) analysis, it was assumed that the Project would add an additional 150 FTE per year over Year 2014 conditions. The Near-Term analysis provided in this study evaluates the potential impacts to the local circulation system associated with an increase of 750 additional FTE. The Long-Term (2035) analysis assumes the entire 3,000 additional FTE.

Figure 2-3 shows the Project's conceptual site plan.

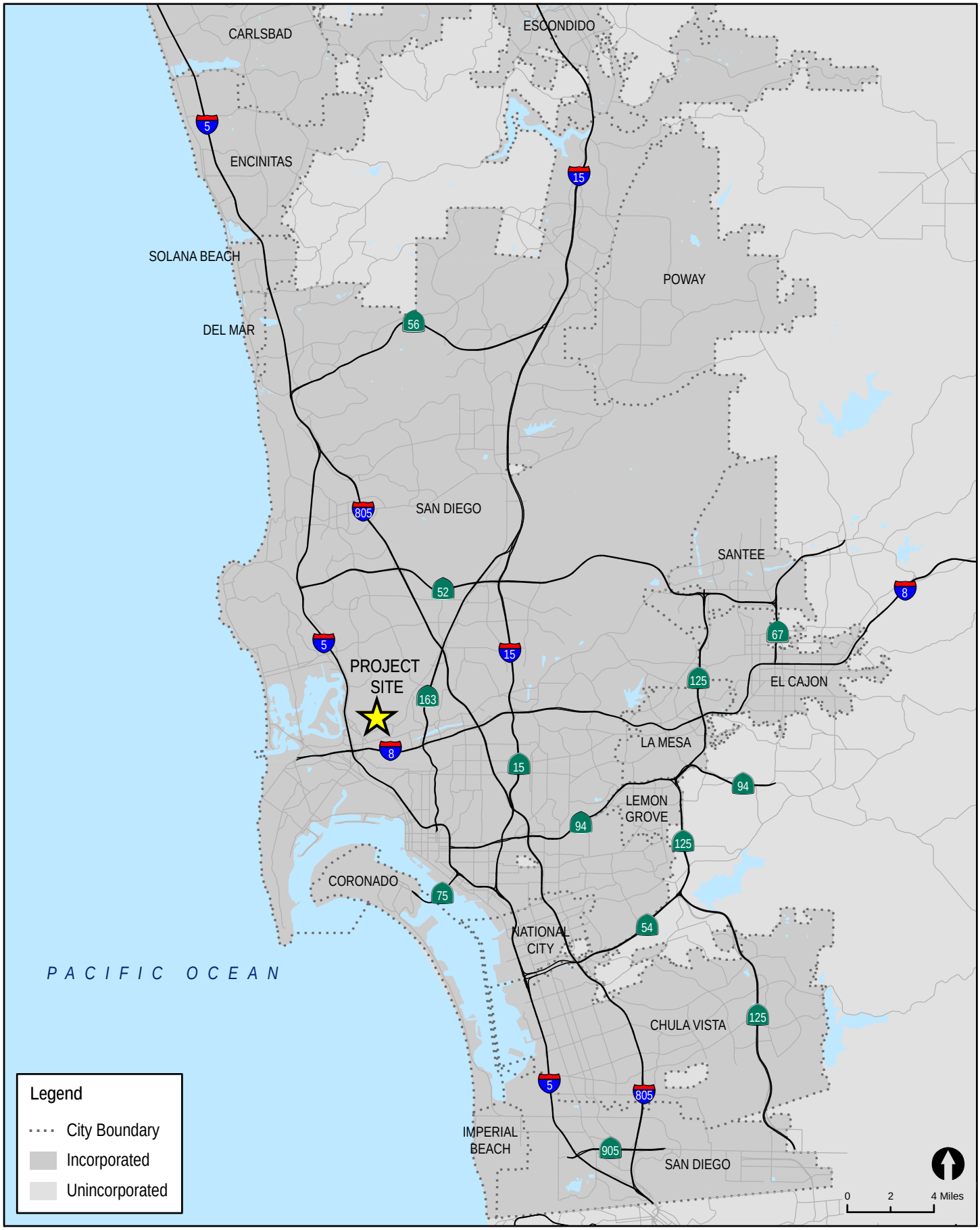

LINSCOTT LAW & GREENSPAN engineers

N:\2341\Figures
Date: 06/24/15

Figure 2-1

Vicinity Map

USD Master Plan Update

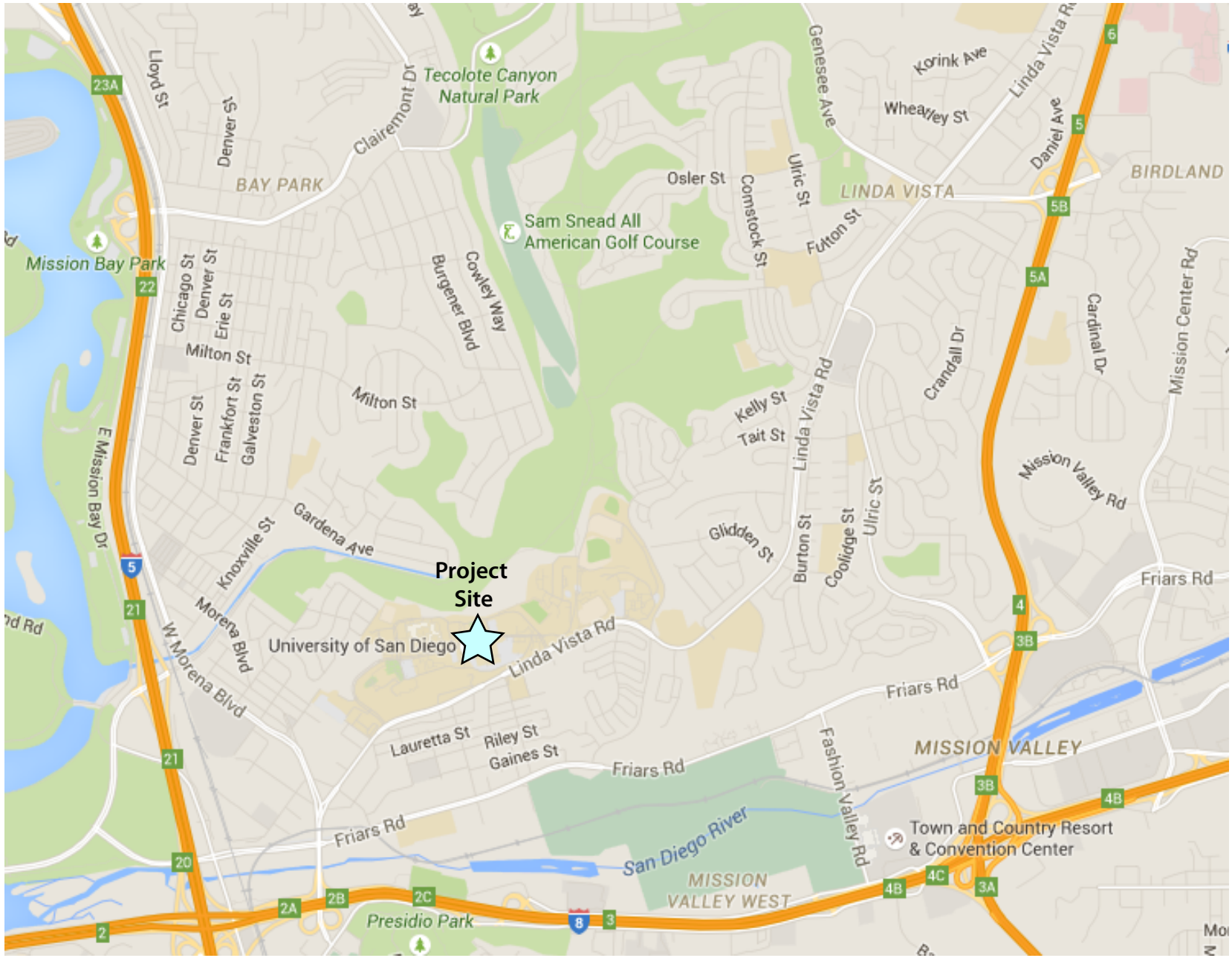

LINSCOTT LAW & GREENSPAN engineers

N:\2341\Figures
Date: 06/24/15

Figure 2-2

Project Area Map

USD MASTER PLAN UPDATE

PROPOSED PROJECTS

Site #	Lot Area (approx. sq. ft.) (1)	Building Footprint (approx. sq. ft.)	Lot Coverage (2)	Building Gross Sq. Ft. (3)	Building Assignable Sq. Ft. (4)	# Beds	Building Height (5)		Project Description
							(Stories/Levels) Above Grade (5)	Maximum Height (ft) (6)	
17	36,500	n/a	n/a	n/a	n/a	n/a	n/a	n/a	Former Lower Olin Future Study Area;Trails/ Landscape Enhancements
18	61,850	27,200	44%	136,000	n/a	n/a	3.0	40.0	Parking/Administrative/Support. Two stories below grade Parking Garage
19	36,800	5,000	14%	n/a	n/a	n/a	1.0	45.0	Plaza/Mall/Bridge
20	55,940	25,000	45%	32,000	19,200	n/a	2.0	24.0	Academic/Administrative/ Support
21	22,520	9,000	40%	13,500	8,100	n/a	2.0	30.0	Academic/Administrative/ Student Services Building
22	152,120	50,000	33%	175,000	105,000	n/a	4.0	65.0	Academic/Administrative Building (step down with grade)
23	74,540	49,000	66%	148,240	88,944	329	4.0	55.0	Student Housing/Parking Structure (step down with grade)
24	41,650	22,000	53%	65,000	39,000	186	5.0	60.0	Student Housing/ Student Services/ Parking.
25	34,910	23,700	68%	71,100	42,660	n/a	3.0	45.0	Academic/ Administrative / Parking Building
26	43,980	26,000	59%	69,500	41,700	n/a	3.0	45.0	Former Engineering Expansion of Loma Hall; Academic/Administrative Building
27	89,690	28,570	32%	85,710	51,426	245	3.0	40.0	Student Housing/ Student Services
28	22,790	6,200	27%	12,400	7,440	n/a	2.0	30.0	Athletics/Administrative Building
29	22,580	8,500	38%	8,500	5,100	n/a	1.0	15.0	Facilities/ Athletics Support
30	131,780	36,500	28%	109,500	65,700	243	3.0	40.0	Student Housing/Student Services/ Parking/Athletics
Totals	**827,650**	**316,670**	**38%**	**926,450**	**474,270**	**1,003**			

FOOTNOTES:

(1) All square footage numbers are approximate estimates and do not represent surveyed areas

(2) Lot Coverage is the percentage of the site that can be feasibly developed given classification of site as least, moderately or highly constrained

(3) Gross Square Footage (GSF) is the total developable building area to exterior walls, including each floor of the building (also known as the building envelope)

(4) Assignable Square Footage (ASF) is space within a building that can be designated for a particular use; ASF if calculated as 60% of GSF

(5) Building Height Level is the number of occupied, enclosed and above grade stories of a building at the lowest Adjacent Ground Elevation; Building Height may be subject to FAA notification

(6) The maximum Height is defined according to the lowest Adjacent Ground Elevation and does not include ornemental or architectural elements as parapet, mansard, equipment, turret

(7) Impervious Surface Area added by new development over existing pervious areas (such as lawn, landscape or natural surfaces); existing parking lots are considered impervious surface area

LINSCOTT LAW & GREENSPAN engineers

N:\2341\Figure
Date: 06/22/2016

Figure 2-3

Site Plan

USD MASTER PLAN UPDATE

3.0 TRIP GENERATION/DISTRIBUTION/ASSIGNMENT

3.1 Trip Generation

Numerous sources were reviewed to determine the appropriate trip generation rates for the University land use. Following is a summary of the trip rates from these sources:

- *City of San Diego* - The City of San Diego Trip Generation manual has a rate of 2.5 ADT per student for Universities (***Appendix A***).
- The *Traffic Circulation and Parking Report for the Proposed USD Master Plan EIR* dated April 19, 1996 – The trip rate in this document was 3.38 ADT per FTE student for USD (*Appendix A*).
- *Memo dated May 3, 2010* (Kimley Horn and Associates) - The trip generation rate in this memo is slightly higher than the 1996 rate, at 3.40 ADT per FTE student for USD (*Appendix A*). This rate is based on actual driveway counts conducted at USD.

As seen above, the highest rate is 3.4 ADT per FTE, which is higher than the City of San Diego rate of 2.5 ADT per student. This higher trip rate of 3.4 ADT per FTE was used to calculate the Project's trip generation under Near-Term (2019) conditions, which proposes an additional 750 FTE (150 additional FTE per year over the next five years).

Table 3-1 summarizes the Project's Near-Term trip generation calculations. As shown in *Table 3-1*, under Near-Term conditions, the Project is calculated to generate 2,550 ADT with 153 AM peak hour trips (138 inbound and 15 outbound) and 204 PM peak hour trips (82 inbound and 122 outbound).

The Project's trip generation under Long-Term conditions, which assumes the entire 3,000 additional FTE, was calculated using an adjusted rate of 3.1 ADT per FTE to account for the University's second year housing requirement which has been newly imposed and requires all second year students to live on campus. The Campus will also be able to provide more student housing with the buildout of the Project's residential components. USD estimates that by 2035, approximately 40% of its students will live on campus, as compared to 30% under Existing conditions. With more students living on-campus, the overall trip rate to/from the campus will decrease. Additional information explaining how the reduced rate of 3.1 ADT per FTE was calculated can be found in ***Appendix B***.

Table 3-2 summarizes the Project's Long-Term trip generation calculations. As shown in *Table 3-2*, under Long-Term conditions, the Project is calculated to generate 9,300 ADT with 558 AM peak hour trips (502 inbound and 56 outbound) and 744 PM peak hour trips (298 inbound and 446 outbound).

3.2 Trip Distribution/Assignment

A Select Zone Assignment (SZA) plot was obtained from SANDAG to determine the regional distribution of the Project traffic. The Project's distribution was also informed by existing student and staff residential zip-code data, obtained from USD, which was used to better understand travel pattern trends. ***Appendix C*** includes the SANDAG Select Zone Assignment plot and the zip-code data. The assignment of Project traffic among the three USD driveways was based on actual driveway counts conducted in 2014.

Figure 3-1 depicts the Project trip distribution percentages that were used in this analysis. ***Figure 3-2*** depicts the Near-Term Project only traffic volumes, and ***Figure 3-3*** depicts the Long-Term Project only traffic volumes.

TABLE 3–1
NEAR-TERM PROJECT TRIP GENERATION

Land Use	Size	Daily Trip Ends (ADTs)		AM Peak Hour				PM Peak Hour			
		Rate [a]	Volume	% of ADT	In : Out Split	Volume In	Volume Out	% of ADT	In : Out Split	Volume In	Volume Out
University (4 Years)	750 FTE[b]	3.4 /FTE	2,550	6%	90 : 10	138	15	8%	40 : 60	82	122

Footnotes:

a. Trip generation rate from *Traffic Circulation and Parking Report for the Proposed USD Master Plan* EIR (KHA, April 1996).
b. FTE: Full-time Enrolled Students

TABLE 3–2
LONG-TERM PROJECT TRIP GENERATION

Land Use	Size	Daily Trip Ends (ADTs)		AM Peak Hour				PM Peak Hour			
		Rate [a]	Volume	% of ADT	In : Out Split	Volume In	Volume Out	% of ADT	In : Out Split	Volume In	Volume Out
University (4 Years)	3,000 FTE[b]	3.1 /FTE	9,300	6%	90 : 10	502	56	8%	40 : 60	298	446

Footnotes:

a. Trip generation rate based on *Traffic Circulation and Parking Report for the Proposed USD Master Plan* EIR (KHA, April 1996), and adjusted to account for a higher percentage of students living on-campus under Long-Term conditions.
b. FTE: Full-time Enrolled Students

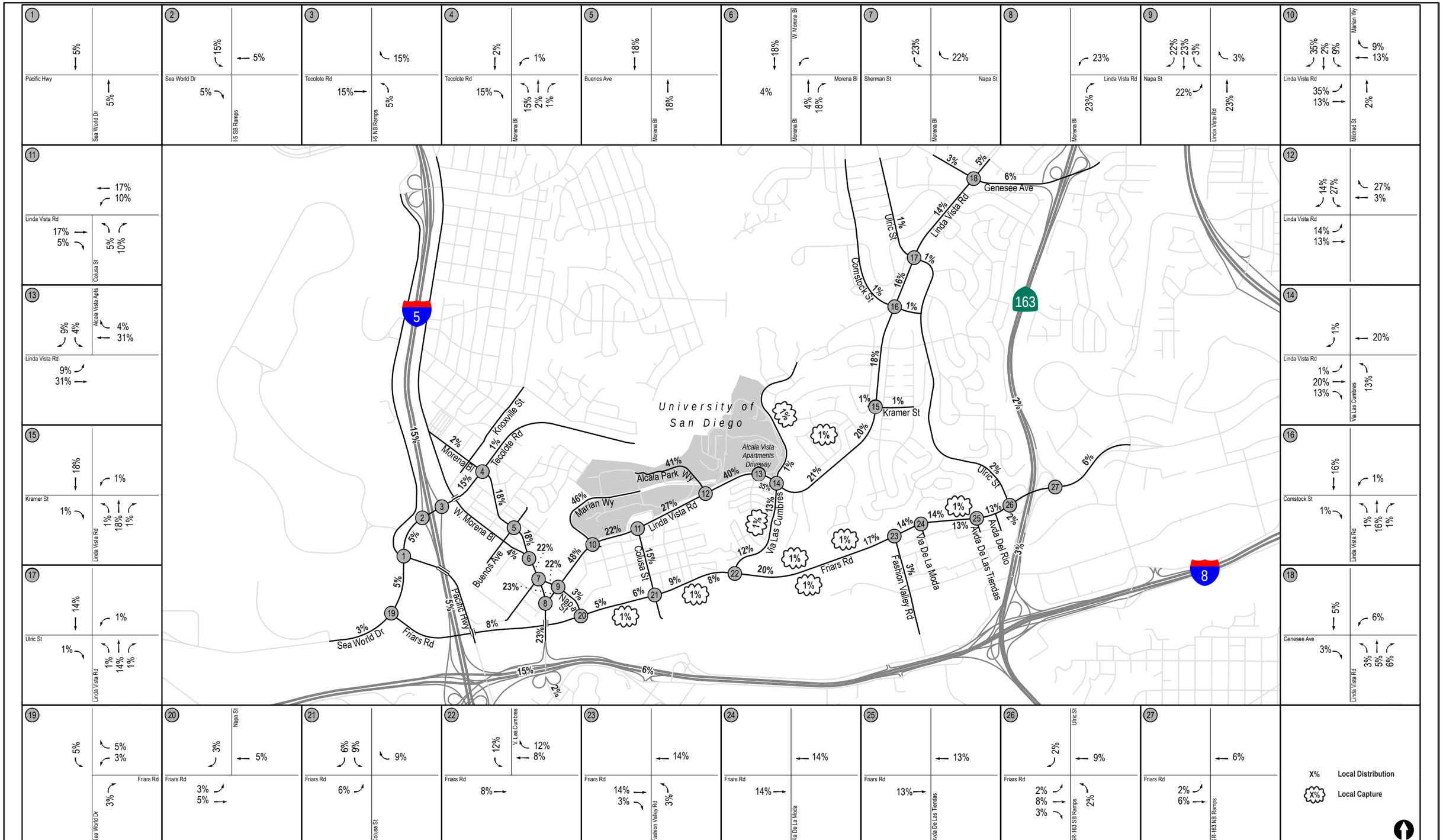

LINSCOTT LAW & GREENSPAN engineers

N:\2464\Figures\June 2016
Date: 06/02/16

Figure 3-1

Project Traffic Distribution

USD Master Plan Update

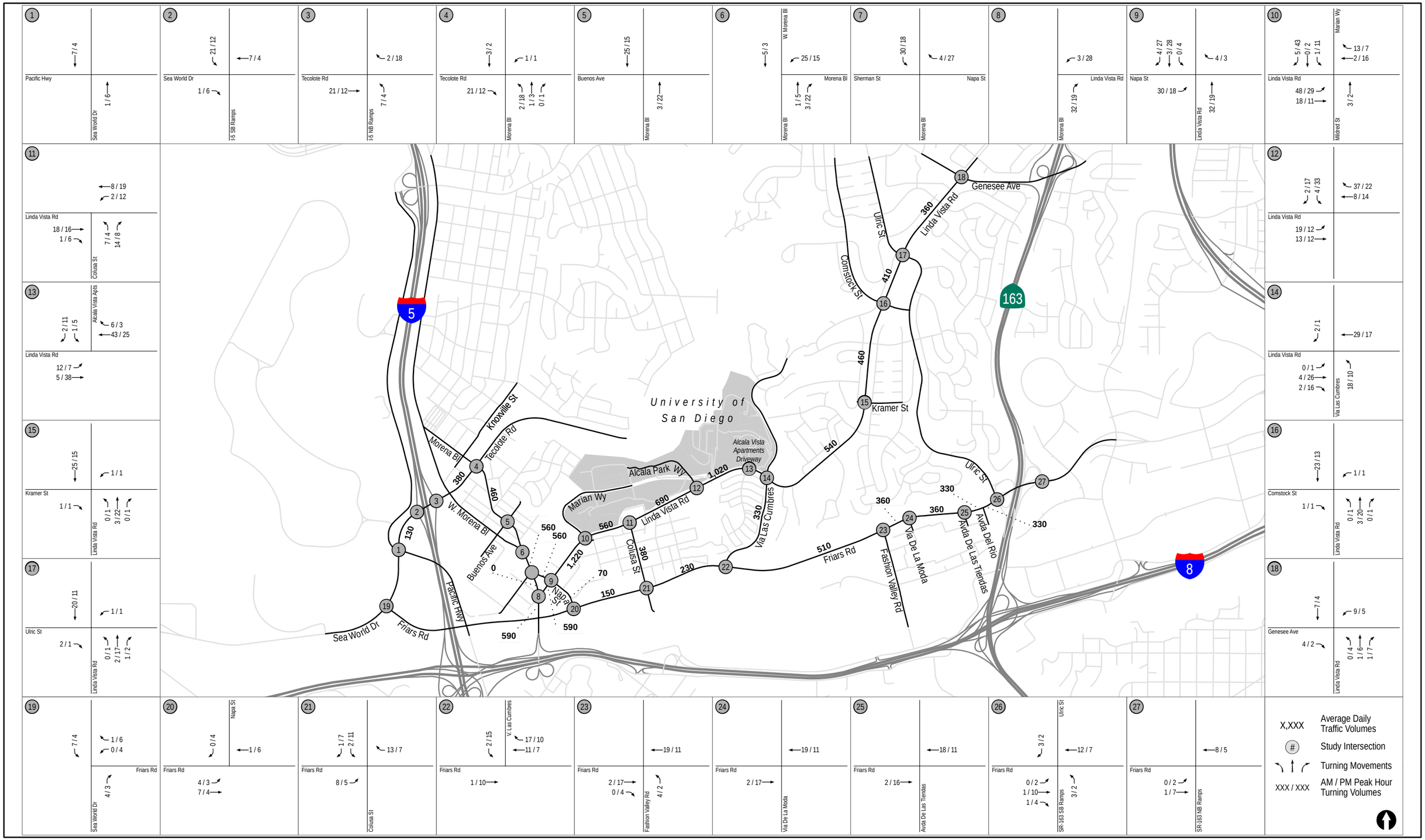

LINSCOTT LAW & GREENSPAN engineers

N:\2341\Figures\June 2016
Date: 06/02/16

Figure 3-2

Near-Term Project Traffic Volumes

USD Master Plan Update

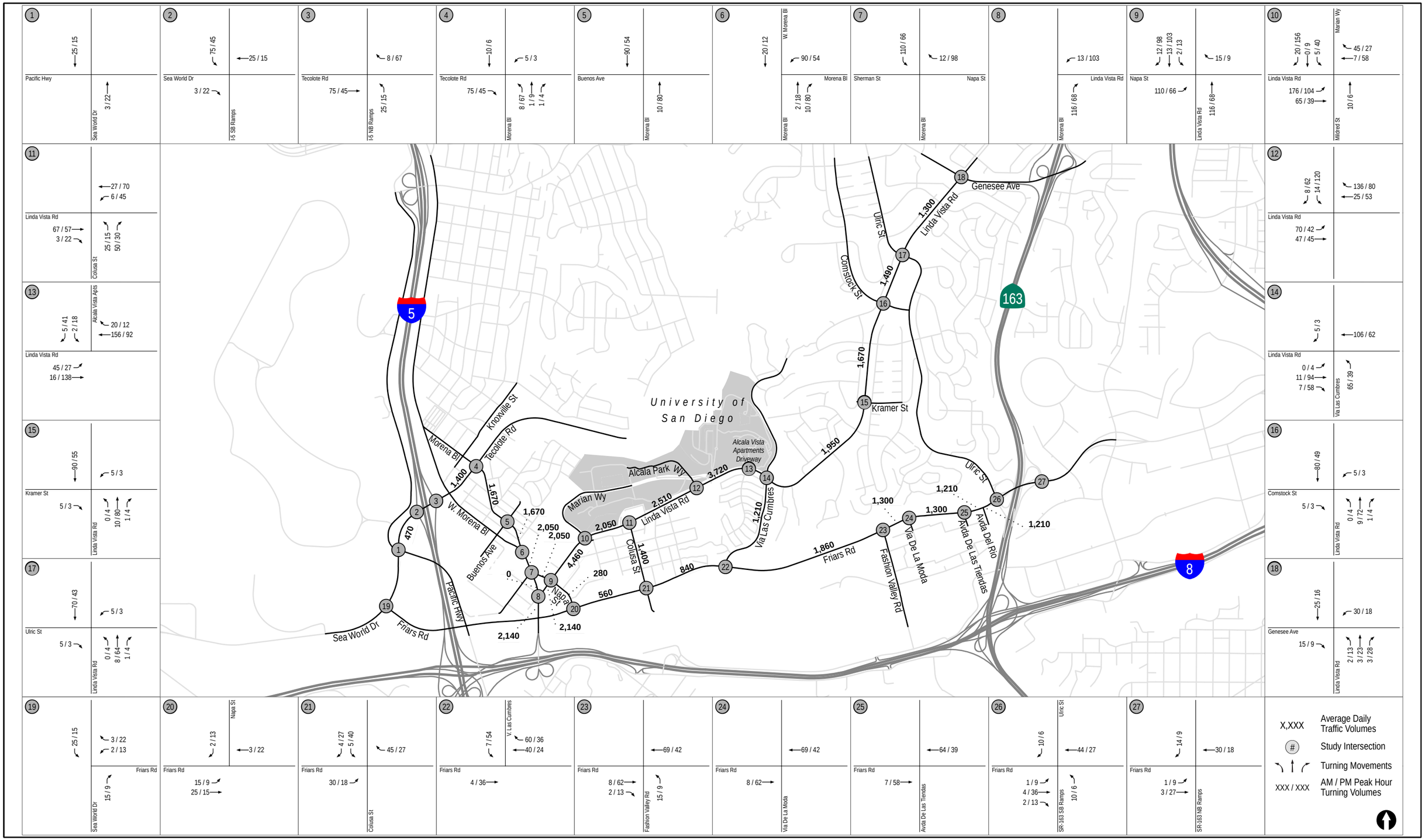

LINSCOTT LAW & GREENSPAN engineers

N:\2341\Figures\June 2016
Date: 06/02/16

Figure 3-3

Long-Term Project Traffic Volumes

USD Master Plan Update

4.0 STUDY AREA, ANALYSIS APPROACH AND METHODOLOGY

4.1 Study Area

The study area was determined based on City of San Diego Traffic Impact Manual and the SANTEC/ITE Regional Guidelines for Traffic Impact Studies which require that a project study area be established as follows:

- All street segments where the project will add 50 or more peak hour trips in either direction.
- Mainline freeway locations where the project will add 50 or more peak hour trips in either direction.
- Metered Freeway Ramps where the project will add 20 or more peak hour trips.

In addition, the study area locations were selected based on the Project's trip distribution and are the most likely locations to be impacted by project. The Project study area includes the following locations:

INTERSECTIONS

1. Sea World Drive (Tecolote Road) / Pacific Highway (Signal)
2. Sea World Drive (Tecolote Road) / I-5 SB Ramps (Signal)
3. Sea World Drive (Tecolote Road) / I-5 NB Ramps (Signal)
4. Tecolote Road / Morena Boulevard (Signal)
5. Buenos Avenue / Morena Boulevard (Signal)
6. Morena Boulevard / W. Morena Boulevard (Signal)
7. Sherman Street/Napa Street / Morena Boulevard (Signal)
8. Linda Vista Road / Morena Boulevard (Signal)
9. Linda Vista Road / Napa Street (Signal)
10. Linda Vista Road / Marian Way/Mildred Street (Signal)
11. Linda Vista Road / Colusa Street (Un-signalized)
12. Linda Vista Road / Alcala Pkwy (Signal)
13. Linda Vista Road / Alcala Apartments Entrance (Un-signalized)
14. Linda Vista Road / Via Las Cumbres (Signal)
15. Linda Vista Road / Kramer Street (Signal)
16. Linda Vista Road / Comstock Street (Signal)
17. Linda Vista Road / Ulric Street (Signal)
18. Linda Vista Road / Genesee Avenue (Signal)
19. Friars Road / Sea World Drive (Signal)
20. Friars Road / Napa Street (Signal)
21. Friars Road / Colusa Street (Signal)

22. Friars Road / Via Las Cumbres (Signal)
23. Friars Road / Fashion Valley Road (Signal)
24. Friars Road / Via de la Moda (Signal)
25. Friars Road / Avenida de las Tiendas (Signal)
26. Friars Road / Ulric St/163 SB Ramps (Signal)
27. Friars Road /163 NB Ramps (Signal)

STREET SEGMENTS

1. **Sea World Drive:** Pacific Highway to I-5 Ramps
2. **Tecolote Road:** I-5 Ramps to Morena Boulevard
3. **Morena Boulevard:** Tecolote Road to Buenos Avenue
4. **Morena Boulevard:** Buenos Avenue to W. Morena Boulevard
5. **Morena Boulevard:** W. Morena Boulevard to Napa Street
6. **Morena Boulevard:** Napa Street to Linda Vista Road
7. **Morena Boulevard:** Linda Vista Road to I-8 Ramps
8. **Linda Vista Road:** Morena Boulevard to Napa Street
9. **Linda Vista Road:** Napa Street to Marian Way
10. **Linda Vista Road:** Marian Way to Colusa Street
11. **Linda Vista Road:** Colusa Street to Alcala Parkway
12. **Linda Vista Road:** Alcala Parkway to Via las Cumbres
13. **Linda Vista Road:** Via Las Cumbres to Kramer Street
14. **Linda Vista Road:** Kramer Street to Comstock Street
15. **Linda Vista Road:** Comstock Street to Ulric Street
16. **Linda Vista Road:** Ulric Street to Genesee Avenue
17. **Friars Road:** Napa Street to Colusa Street
18. **Friars Road:** Colusa Street to Via Las Cumbres
19. **Friars Road:** Via Las Cumbres to Fashion Valley Road
20. **Friars Road:** Fashion Valley Road to Via de la Moda
21. **Friars Road:** Via de la Moda to Avenida de las Tiendas
22. **Friars Road:** Avenida de las Tiendas to SR 163 SB Ramps (Ulric Street)
23. **Napa Street:** Friars Road to Linda Vista Road
24. **Napa Street:** Linda Vista Road to Morena Boulevard
25. **Colusa Street:** Friars Road to Linda Vista Road
26. **Via Las Cumbres:** Friars Road to Linda Vista Road

FREEWAY RAMP METERS

1. Sea World Drive / I-5 NB On-Ramp
2. Sea World Drive / I-5 SB On-Ramp

FREEWAY MAINLINE SEGMENTS

1. **I-5:** Sea World Drive to I-8
2. **I-8:** Morena Boulevard to Taylor Street

4.2 Analysis Approach

This study assesses the above mentioned key intersections, street segments, ramp meters and freeway mainline segments in the Project area. The study area locations were analyzed under the following conditions to determine potential impacts to the road network:

- Existing
- Near-Term without Project (Existing + Cumulative Projects; Year 2019)
- Near-Term (Existing + Cumulative Projects; Year 2019) + Project
- Year 2035 without Project
- Year 2035 + Project

4.3 Methodology

There are various methodologies used to analyze signalized intersections, un-signalized intersections and street segments. The measure of effectiveness for intersection and segment operations is level of service which denotes the operating conditions which occur at a given intersection or on a given roadway segment under various traffic volume loads. It is a qualitative measure used to describe a quantitative analysis taking into account factors such as roadway geometries, signal phasing, speed, travel delay, freedom to maneuver, and safety. Level of service provides an index to the operational qualities of a roadway segment or an intersection. Levels of service designations range from A to F, with LOS A representing the best operating conditions and LOS F representing the worst. Level of service designation is reported differently for signalized and un-signalized intersections, as well as for roadway segments.

In the 2010 Highway Capacity Manual (HCM), Level of Service for signalized intersections is defined in terms of delay. The level of service analysis results in seconds of delay expressed in terms of letters A through F. Delay is a measure of driver discomfort, frustration, fuel consumption, and lost travel time. ***Table 4-1*** summarizes the signalized intersections levels of service descriptions.

4.3.1 *Signalized Intersections*

Table 4-2 depicts the criteria, which are based on the overall average control delay for a signalized intersection. The level of service criteria is stated in terms of the average control delay per vehicle for a 15-minute analysis period. Control delay includes initial deceleration delay, queue move-up time, stopped delay, and final acceleration delay.

Level of service A describes operations with very low delay, (i.e. less than 10.0 seconds per vehicle). This occurs when progression is extremely favorable, and most vehicles arrive during the green phase. Most vehicles do not stop at all. Short cycle lengths may also contribute to low delay.

Level of service B describes operations with delay in the range 10.1 seconds and 20.0 seconds per vehicle. This generally occurs with good progression and/or short cycle lengths. More vehicles stop than for LOS A, causing higher levels of Average delay.

Level of service C describes operations with delay in the range 20.1 seconds and 35.0 seconds per vehicle. These higher delays may result from fair progression and/or longer cycle lengths. Individual cycle failures may begin to appear. The number of vehicles stopping is significant at this level, although many still pass through the intersection without stopping.

Level of service D describes operations with delay in the range 35.1 seconds and 55.0 seconds per vehicle. At level D, the influence of congestion becomes more noticeable. Longer delays may result from some combination of unfavorable progression, long cycle lengths, or higher v/c ratios. Many vehicles stop, and the proportion of vehicles not stopping declines. Individual cycle failures are more frequent.

Level of service E describes operations with delay in the range of 55.1 seconds to 80.0 seconds per vehicle. This is considered to be the limit of acceptable delay. These high delay values generally indicate poor progression, long cycle lengths, and high v/c ratios. Individual cycle failures are frequent occurrences.

Level of service F describes operations with delay in excess of over 80.0 seconds per vehicle. This is considered to be unacceptable to most drivers. This condition often occurs with over-saturation (i.e., when arrival flow rates exceed the capacity of the intersection). It may also occur at high v/c ratios below 1.00 with many individual cycle failures. Poor progression and long cycle lengths may also be major contributing causes to such delay levels

TABLE 4–1
INTERSECTION LEVEL OF SERVICE DESCRIPTIONS

Level of Service	Description
A	Occurs when progression is extremely favorable and most vehicles arrive during the green phase. Most vehicles do not stop at all. Short cycle lengths may also contribute to low delay.
B	Generally occurs with good progression and/or short cycle lengths. More vehicles stop than for LOS A, causing higher levels of average delay.
C	Generally results when there is fair progression and/or longer cycle lengths. Individual cycle failures may begin to appear in this level. The number of vehicles stopping is significant at this level, although many still pass through the intersection without stopping.
D	Generally results in noticeable congestion. Longer delays may result from some combination of unfavorable progression, long cycle lengths, or high volume-to-capacity ratios. Many vehicles stop, and the proportion of vehicles not stopping declines. Individual cycle failures are noticeable.
E	Considered to be the limit of acceptable delay. These high delay values generally indicate poor progression, long cycle lengths, and high volume-to-capacity ratios. Individual cycle failures are frequent occurrences.
F	Considered to be unacceptable to most drivers. This condition often occurs with over saturation i.e. when arrival flow rates exceed the capacity of the intersection. It may also occur at high volume-to-capacity ratios below 1.00 with many individual cycle failures. Poor progression and long cycle lengths may also be major contributing causes to such delay levels

TABLE 4–2
INTERSECTION LOS & DELAY RANGES

LOS	Delay (seconds/vehicle)	
	Signalized Intersections	Un-signalized Intersections
A	≤ 10.0	≤ 10.0
B	10.1 to 20.0	10.1 to 15.0
C	20.1 to 35.0	15.1 to 25.0
D	35.1 to 55.0	25.1 to 35.0
E	55.1 to 80.0	35.1 to 50.0
F	≥ 80.1	≥ 50.1

Source: 2010 Highway Capacity Manual

4.3.2 *Un-signalized Intersections*

Table 4-2 depicts the criteria, which are based on the average control delay for any particular minor movement at an un-signalized intersection. The level of service is determined by the computed or measured control delay and is defined for each minor movement. Level of service is not defined for the intersection as a whole.

Level of Service F exists when there are insufficient gaps of suitable size to allow a side street demand to safely cross through a major street traffic stream. This level of service is generally evident from extremely long control delays experienced by side-street traffic and by queuing on the minor-street approaches. The method, however, is based on a constant critical gap size; that is, the critical gap remains constant no matter how long the side-street motorist waits.

LOS F may also appear in the form of side-street vehicles selecting smaller-than-usual gaps. In such cases, safety may be a problem, and some disruption to the major traffic stream may result. It is important to note that LOS F may not always result in long queues but may result in adjustments to normal gap acceptance behavior, which are more difficult to observe in the field than queuing.

4.3.3 *Street Segments*

Street segment analysis is based upon the comparison of daily traffic volumes (ADTs) to the City of San Diego's *Roadway Classification, Level of Service, and ADT Table*. This table provides segment capacities for different street classifications, based on traffic volumes and roadway characteristics. The City of San Diego's *Roadway Classification, Level of Service and ADT* table is shown in ***Table 4–3.***

TABLE 4–3
LEVEL OF SERVICE THRESHOLDS FOR ROADWAY SEGMENTS

Classification	(# of Lanes)	Level of Service				
		A	B	C	D	E
Freeway	8	60,000	84,000	120,000	140,000	150,000
Freeway	6	45,000	63,000	90,000	110,000	120,000
Freeway	4	30,000	42,000	60,000	70,000	80,000
Expressway	6	30,000	42,000	60,000	70,000	80,000
Prime Arterial	6	25,000	35,000	50,000	55,000	60,000
Major Arterial	6	20,000	28,000	40,000	45,000	50,000
Major Arterial	4	15,000	21,000	30,000	35,000	40,000
Collector	4	10,000	14,000	20,000	25,000	30,000
Collector (no center lane or continuous left-turn lane)	4 2	5,000	7,000	10,000	13,000	15,000
Collector (no fronting property)	2	4,000	5,500	7,500	9,000	10,000
Collector (commercial-industry fronting)	2	2,500	3,500	5,000	6,500	8,000
Collector (multi-family)	2	2,500	3,500	5,000	6,500	8,000
Collector (single-family)	2	—	—	2,200	—	—

Notes:
1. The volumes and the average daily level of service listed above are only intended as a general planning guideline.
2. Levels of service are not applied to residential streets since their primary purpose is to serve abutting lots, not carry through traffic. Levels of service normally apply to roads carrying through traffic between major trip generators and attractors.

Source: City of San Diego Traffic Impact Study Manual, May 2003.

4.3.4 *Arterial Segments*

The speed of vehicles on urban streets is influenced by three main factors: street environment, interaction among vehicles, and traffic control. As a result, these factors affect quality of service. There is a distinct set of urban street LOS for each urban street class. Levels of service based on prevailing speeds and class of arterials determine the operations of arterials. The Arterial Class is calculated automatically by the Synchro software used for this analysis based on the distances between intersections and the link speeds. ***Table 4-4*** is based on FHWA research that shows longer running times on networks with short segments. This will cause longer travel times and lower LOS than using the free flow speeds.

Travel Time = Running Time + Signal Delay (intersection delay)

Arterial Speed = Total Distance / Total Travel Time

Segment Distance = Total Distance / Number of Segments

Flow Speed = Free Flow Speed (FFS) / Link.

TABLE 4–4
ARTERIAL ANALYSIS DEFINITIONS

Speed (mph)	Segment Distance	Class
1 to 29	any	IV
30 to 35	< 2000 ft	IV
30 to 35	>/= 2000 ft	III
36 to 45	any	II
above 45	any	I

4.3.5 *Ramp Meters*

The method currently accepted by the City to calculate ramp delays and queues is a *fixed rate* approach. The fixed rate approach is based solely on the specific time intervals at which the ramp meter is programmed to release traffic.

The fixed rate approach, used in this report, generally tends to produce unrealistic queue lengths and delays. The results are theoretical and based on Caltrans' most restrictive ramp meter rate. Because ramp meter rates are not constant, even within the peak hours, the analysis was conducted using the most restrictive meter rates. The meter rates dynamically adjust based on the level of traffic on the freeway mainlines. The meter rates were obtained from Caltrans. Furthermore, the fixed rate approach does not take into account driver behavior such as "ramp shopping" or trip diversion.

4.3.6 *Freeway Segments*

Freeway segments were analyzed during the AM and PM peak hours based on the methodologies as outlined in the SANTEC/ITE Guidelines developed by Caltrans. The freeway segments LOS is based on a Volume to Capacity (V/C) method. Page 5 of Caltrans' *Guide for the Preparation of Traffic Impact Studies,* December 2002 documents a maximum service flow rate of 2,350 passenger cars per hour per lane. However, a service flow rate of 2,000 was used for this analysis for mainline lanes and 1,200 for Auxiliary and HOV lanes. The freeway LOS thresholds are summarized in ***Table 4–5***.

TABLE 4–5
FREEWAY SEGMENT LEVELS OF SERVICE

LOS	V/C
A	<0.41
B	0.62
C	0.8
D	0.92
E	1.00
F(0)	1.25
F(1)	1.35
F(2)	1.45
F(3)	>1.46

Footnotes:
LOS = Level of Service
V/C = Volume/Capacity
Source: SANTEC/ITE Guidelines, March 2000 (based on Caltrans)

5.0 SIGNIFICANCE CRITERIA

According to the City of San Diego's *Significance Determination Thresholds* dated January 2011, a project is considered to have a significant impact if project traffic would decrease the operations of surrounding roadways by a defined threshold. The City defined thresholds are shown in ***Table 5–1***.

The impact is designated either a "direct" or "cumulative" impact. According to the City's *Significance Determination Thresholds*,

> *"Direct* traffic impacts are those projected to occur at the time a proposed development becomes operational, including other developments not presently operational but which are anticipated to be operational at that time (near term)."
>
> *"Cumulative* traffic impacts are those projected to occur at some point after a proposed development becomes operational, such as during subsequent phases of a project and when additional proposed developments in the area become operational (short-term cumulative) or when affected community plan area reaches full planned buildout (long-term cumulative)."
>
> "It is possible that a project's near term (direct) impacts may be reduced in the long term, as future projects develop and provide additional roadway improvements (for instance, through implementation of traffic phasing plans). In such a case, the project may have direct impacts but not contribute considerably to a cumulative impact."
>
> "For intersections and roadway segments affected by a project, level of service (LOS) D or better is considered acceptable under both direct and cumulative conditions."

If the project exceeds the thresholds in *Table 5–1*, then the project is considered to have a significant "direct" or "cumulative" project impact. A significant impact can also occur if a project causes the Level of Service to degrade from D to E, even if the allowable increases in *Table 5–1* are not exceeded. A feasible mitigation measure will need to be identified to return the impact within the City thresholds, or the impact will be considered significant and unmitigated.

TABLE 5–1
CITY OF SAN DIEGO
TRAFFIC IMPACT SIGNIFICANT THRESHOLDS

Level of Service with Project [b]	Allowable Increase Due to Project Impacts [a]					
	Freeways		Roadway Segments		Intersections	Ramp Metering [c]
	V/C	Speed (mph)	V/C	Speed (mph)	Delay (sec.)	Delay (min.)
E	0.010	1.0	0.02	1.0	2.0	2.0
F	0.005	0.5	0.01	0.5	1.0	1.0

Footnotes:

a. If a proposed project's traffic causes the values shown in the table to be exceeded, the impacts are determined to be significant. The project applicant shall then identify feasible improvements (within the Traffic Impact Study) that will restore/and maintain the traffic facility at an acceptable LOS. If the LOS with the proposed project becomes unacceptable (see note b), or if the project adds a significant amount of peak-hour trips to cause any traffic queues to exceed on- or off-ramp storage capacities, the project applicant shall be responsible for mitigating the project's direct significant and/or cumulatively considerable traffic impacts.

b. All LOS measurements are based upon Highway Capacity Manual procedures for peak-hour conditions. However, V/C ratios for roadway segments are estimated on an ADT/24-hour traffic volume basis (using Table 2 of the City's Traffic Impact Study Manual). The acceptable LOS for freeways, roadways, and intersections is generally "D" ("C" for undeveloped locations). For metered freeway ramps, LOS does not apply. However, ramp meter delays above 15 minutes are considered excessive.

c. The allowable increase in delay at a ramp meter with more than 15 minutes of delay and freeway LOS E is 2 minutes and at LOS F is 1 minute.

General Notes:

1. Delay = Average control delay per vehicle measured in seconds for intersections, or minutes for ramp meters.
2. LOS = Level of Service
3. V/C = Volume to Capacity Ratio (capacity at LOS E should be used)
4. Speed = Arterial speed measured in miles per hour for Congestion Management Program (CMP) analyses

However, if project impacts are projected to result in an increase in V/C greater than 0.02 for a segment operating at LOS E without the project, or greater than 0.01 for a segment operating at LOS F without the project, and the segment is built to its ultimate classification, an alternative analysis can be provided to assess segment impacts.

The analysis would determine whether 1) the intersections at the ends of the segment are calculated to operate at an acceptable LOS with the project; and 2) a peak hour Highway Capacity Manual (HCM) arterial analysis for the same segment shows that the segment operates at an acceptable LOS with the project. If both intersections at the end of the segment operate acceptably, and the peak hour HCM arterial analysis for the same segment shows the segment operates acceptably then the project impacts are determined to be less than significant and no mitigation is required.

6.0 ANALYSIS OF EXISTING CONDITIONS

Effective evaluation of the traffic impacts associated with the proposed Project requires an understanding of the existing transportation system within the project area.

6.1 Existing Street Network

The following is a brief description of the existing street system in the project area. Street classifications are based on the *Linda Vista Community Plan Circulation Element*, April 26, 2011 and on the *Mission Valley Community Plan Circulation Element,* May 20, 2013.

Figure 6–1 shows an existing conditions diagram, including signalized intersections and lane configurations.

Linda Vista Road is classified in the *Linda Vista Community Plan Circulation Element* as a Four-Lane Major roadway. Within the study area, Linda Vista Road is currently built as a Four-Lane Collector with a striped median and intermittent two-way left-turn lane (TWLTL) between Morena Boulevard and Via Las Cumbres. Between Kramer Street and Comstock Street and between Ulric Street and Genesee Avenue, Linda Vista Road is currently built as a four-lane Major Road with a raised median. Bike lanes and sidewalks are provided, curbside parking is prohibited, and the posted speed limit is 40 mph. This portion of Linda Vista Road is generally surrounded by commercial, residential, and institutional land uses.

Morena Boulevard is classified in the *Linda Vista Community Plan Circulation Element* as a Four-Lane Major roadway from its overpass with Friars Road to its split with West Morena Boulevard. From West Morena Boulevard to Tecolote Road it is classified as a Three-Lane Collector and north of Knoxville Street within the Community of Linda Vista it is classified as a Two-Lane Collector. It is currently built as a four-lane divided roadway with a raised median from the Friars Road underpass to its split with West Morena Boulevard. Morena Boulevard south of Tecolote Road to its split with West Morena Boulevard is built as a 2-Lane Collector with a central two-way-left-turn lane. Sidewalks are provided and bike lanes exist. Parking is prohibited from the Friars Road underpass to the split at West Morena Boulevard. North of West Morena Boulevard, parking is allowed on both sides of the roadway. The posted speed limit is 35 mph. This portion of Morena Boulevard is generally surrounded by commercial, light industrial and residential land uses.

Friars Road forms the boundary between the Linda Vista and Mission Valley Communities, and is a classified roadway on both the Mission Valley Community Plan and the Linda Vista Community Plan, with incremental classification inconsistencies between the two documents. In the *Linda Vista Community Plan,* Friars Road is classified as a Four-Lane Major Arterial between west of Napa Street and Fashion Valley Road, a Six-Lane Major Arterial between Fashion Valley Road and the SR-163 Interchange, and a Six-Lane Primary Arterial east of the SR-163 Interchange. In the *Mission Valley Community Plan,* Friars Road is classified as a Four-Lane Major Arterial between east of Napa Street and Colusa Street, a Six-Lane Major Arterial

between Colusa Street and the SR-163 Interchange, and an Eight-Lane Primary Arterial between the SR-163 Interchange and Mission Center Road.

Friars Road is currently built as follows:

- *Napa Street to Colusa Street* - Four-lane divided roadway with a raised median.
- *East of Colusa Street to Fashion Valley Road* - Four-lane roadway with an intermittent TWLTL and striped median.
- *East of Fashion Valley Road to Avenida de las Tiendas*– Three travel lanes in the eastbound direction and two travel lanes westbound, with a raised median.
- *West of Avenida de las Tiendas to SR-163* - Six-lane facility, with a raised median.

Bike lanes and sidewalks are provided along the roadway. The bike lanes on the north side are provided adjacent to the curbside parking between just east of Napa Street and just west of Fashion Valley Road. The posted speed limit is 45 mph.

Napa Street is classified on the *Linda Vista Community Plan Circulation Element* as a Four-Lane Major roadway. Napa Street connects Friars Road and Morena Boulevard and is currently a four-lane divided roadway with a striped and raised median from Friars Road to Linda Vista Road and a four-lane undivided roadway from Linda Vista Road to Morena Boulevard. No bike lanes are provided. Sidewalks exist on both sides of the roadway and curbside parking is permitted intermittently. The posted speed limit is 25 mph. This portion of Napa Street generally fronts commercial and multi-family residential land uses.

Sea World Drive is currently classified on the *Linda Vista Community Plan Circulation Element* as a Five-Lane Prime Arterial between Pacific Highway and I-5. Sea World Drive is currently built as a Five-Lane Major Road with a striped median along this segment. Bike lanes and curbs are provided. The posted speed limit is 40 mph. Curbside parking is not permitted.

Tecolote Road is classified on the *Linda Vista Community Plan Circulation Element* as a Four-Lane Major Road from the I-5 Ramps to Morena Boulevard. It is currently built to its ultimate classification as a Four-Lane Major Road with a raised median. Currently, bike lanes, curbs and a raised median are provided. The posted speed limit is 40 mph. Curbside parking is not permitted.

Colusa Street is classified as a Two-Lane Collector between Friars Road and Linda Vista Road. It is currently built as a two-lane roadway between Friars Road and Linda Vista Road. Curbside parking is permitted along both curbs. The land uses fronting this street are generally multi-family residential. The posted speed limit is 25 mph.

Via Las Cumbres is classified on the *Linda Vista Community Plan Circulation Element* as a Four-Lane Collector from Friars Road to Linda Vista Road and as a Two-Lane Collector north of Linda Vista Road. Along this stretch it is currently built as a three-lane undivided roadway with

two lanes of travel in the northbound direction and one lane traveling southbound. A sidewalk is provided on only the west side of the roadway from Friars Road up to Camino Costanero where sidewalks are then provided on both sides of the roadway. Curbside parking is provided intermittently, a bike lane is provided on the east side of the roadway commencing about 75 feet north of Friars Road continuing to Linda Vista Road and a sharrow is provided on the west side of the roadway from Friars Road to Camino Costanero that transitions to a bike lane from Camino Costanero to Linda Vista Road. North of Linda Vista Road a sharrow is provided on the east side of the roadway and a bike lane is provided on the west side of the roadway. The posted speed limit is 35 mph. Via Las Cumbres is generally surrounded by university and multi-family residential land uses.

Interstate 5 (I-5) is a major north-south Interstate Freeway providing interregional connectivity between San Diego County and Orange / Los Angeles Counties to the north. It has a posted speed limit of 65 miles per hour. Within the study area, I-5 generally consists of eight travel lanes in the north-south direction with additional auxiliary lanes.

State Route 163 (SR-163) is a north-south State Route providing interregional connectivity between downtown San Diego and Interstate 15 to the north. It has a posted speed limit of 65 miles per hour. Within the study area, SR-163 generally consists of eight travel lanes in the north-south direction with additional auxiliary lanes.

Interstate 8 (I-8) is a major east-west Interstate Freeway providing interregional connectivity between San Diego County and Imperial County to the east. It has a posted speed limit of 65 miles per hour. Within the study area, I-8 generally consists of eight travel lanes in the east-west direction with additional auxiliary lanes.

6.2 Existing Traffic Volumes

6.2.1 *Peak Hour Intersection Counts*

Linscott, Law & Greenspan Engineers (LLG) commissioned peak hour turning movement volume counts at the majority of the study area intersections in May 2014 while USD and public schools were in session. The study area peak hour intersection turning movement volume counts were conducted during both the AM (7:00-9:00) and PM (4:00-6:00) peak periods.

Figure 6–2 depicts the Existing traffic volumes.

6.2.2 *Daily Segment Counts*

Table 6–1 is a summary of the average daily traffic volumes (ADTs). LLG commissioned 24-hour street segment counts for the study area locations in May 2014. Additional traffic volume counts were conducted in September 2014 and April 2013 (from the *Morena Boulevard Station Area Planning Study*) as indicated in *Table 6-1*.

6.2.3 *Freeway Mainline Volumes*

Freeway volumes were obtained from the Performance Measurement System (PeMS). The PeMS software distributes real-time peak hour and average daily traffic volumes and provides a graphical representation of volumes at each PeMS station location. Peak hour freeway volumes were obtained from data collected during May 2014.

Appendix D contains the manual intersection and segment count sheets and the signal timing plans.

TABLE 6–1
EXISTING TRAFFIC VOLUMES

Street Segment	Source	Date	ADT [a]
Sea World Drive			
Pacific Highway to I-5 Ramps	LLG Engineers	May-14	31,969
Tecolote Road			
I-5 to Morena Blvd	MBSAP Study[b]	April-13	24,008
Morena Boulevard			
Tecolote Road to Buenos Avenue	MBSAP Study[b]	April-13	15,598
Buenos Avenue to W. Morena Boulevard	MBSAP Study[b]	April-13	16,603
W. Morena Blvd to Napa St	MBSAP Study[b]	April-13	28,903
Napa St to Linda Vista St	MBSAP Study[b]	April-13	23,023
Linda Vista Rd to I-8 Ramps	MBSAP Study[b]	April-13	37,129
Linda Vista Road			
Morena Blvd to Napa St	MBSAP Study[b]	April-13	22,190
Napa St to Marian Way/Mildred	MBSAP Study[b]	April-13	26,868
Marian Way/Mildred to Colusa Street	LLG Engineers	May-14	18,880
Colusa Street to Alcala Pkwy	LLG Engineers	May-14	18,938
Alcala Pkwy to Via Las Cumbres	LLG Engineers	May-14	17,401
Via Las Cumbres to Kramer Street	LLG Engineers	May-14	14,381
Kramer Street to Comstock Street	LLG Engineers	May-14	15,480
Comstock Street to Ulric Street	LLG Engineers	May-14	16,548
Ulric Street to Genesee Avenue	LLG Engineers	May-14	23,429
Friars Road			
Napa St to Colusa St	MBSAP Study[b]	April-13	19,611
Colusa St to Via Las Cumbres	LLG Engineers	May-14	18,646
Via Las Cumbres to Fashion Valley Rd	LLG Engineers	September-14	24,046
Fashion Valley Rd to Via de la Moda	LLG Engineers	September-14	25,247
Via de la Moda to Avenida de las Tiendas	LLG Engineers	September-14	30,063
Avenida de las Tiendas to Ulric Street / SR 163 SB Ramps	LLG Engineers	September-14	41,993
Napa Street			
Friars Road to Linda Vista Road	MBSAP Study[b]	April-13	17,703
Linda Vista Road to Morena Boulevard	MBSAP Study[b]	April-13	24,265
Colusa Street			
Friars Road to Linda Vista Road	LLG Engineers	May-14	2,190
Via Las Cumbres			
Friars Rd to Linda Vista Rd	LLG Engineers	May-14	7,858

Footnote:

a. Average Daily Traffic
b. Counts from the *Morena Boulevard Station Area Planning Study*, 2014.

6.3 Analysis of Existing Conditions

6.3.1 *Intersection Operations*

Table 6-2 summarizes the Existing peak hour intersection operations. As seen in *Table 6-2*, the following intersections are calculated to currently operate at LOS E or worse:

11. Linda Vista Road / Colusa Street – LOS E during the PM peak hour
18. Linda Vista Road / Genesee Avenue –LOS E during the PM peak hour
26. Friars Road / Ulric Street / SR 163 SB Ramps – LOS E during the AM and LOS F during the PM peak hours

Appendix E contains the Existing peak hour intersection analysis worksheets.

6.3.2 *Segment Operations*

Table 6-3 summarizes the Existing segment operations. The following segments are calculated to operate at LOS E or worse:

- Morena Boulevard: Tecolote Road to Buenos Avenue – LOS F
- Morena Boulevard: Buenos Avenue to W. Morena Boulevard – LOS F
- Morena Boulevard: Linda Vista Road to I-8 Ramps – LOS E
- Linda Vista Road: Napa Street to Marian Way – LOS E

6.3.3 *Ramp Meter Operations*

Table 6-4 summarizes the Existing ramp meter operations at the I-5 / Sea World Drive / Tecolote Road NB and SB on-ramps. As seen in *Table 6-4*, the NB on-ramp is calculated to have no delay during the AM and PM peak hours and the SB on-ramp is calculated to have 10 minutes of delay during the AM peak hour and 24 minutes of delay during the PM peak hour.

It should be noted that the ramp meter analysis was conducted using the fixed rate approach, which produces unrealistic queue lengths and delays. The meter rates were obtained from Caltrans. The results are theoretical and based on Caltrans' most restrictive ramp meter rate, as ramp meter rates are not constant, even within the peak hours. The meter rates dynamically adjust based on the level of traffic on the freeway mainlines. Furthermore, the fixed rate approach does not take into account driver behavior such as "ramp shopping" or trip diversion.

Field observations were conducted during the PM peak hour to determine the actual maximum observed delay and maximum observed queue experienced at the I-5 SB On-Ramp at Sea World Drive. The maximum delay was observed to be approximately three (3) minutes and the maximum queue was observed to be 540 feet. Therefore, the ramp meter delay and queue results reported in *Table 6-4* are overstated, and do not represent actual conditions.

6.3.4 *Freeway Mainline Operations*

Table 6-5 summarizes the Existing freeway mainline operations. As seen in *Table 6-5*, the study area freeway mainline segments are calculated to operate at acceptable levels of service during the AM and PM peak hours.

TABLE 6–2
EXISTING INTERSECTION OPERATIONS

Intersection	Control Type	Peak Hour	Existing	
			Delay [a]	LOS [b]
1. Sea World Dr / Pacific Hwy	Signal	AM	19.0	B
		PM	26.4	C
2. Sea World Dr / I-5 SB Ramps	Signal	AM	27.5	C
		PM	28.4	C
3. Sea World Dr / I-5 NB Ramps	Signal	AM	29.8	C
		PM	47.3	D
4. Tecolote Rd / Morena Blvd	Signal	AM	40.4	D
		PM	37.5	D
5. Buenos Ave / Morena Blvd	Signal	AM	9.9	A
		PM	11.8	B
6. Morena Blvd / W. Morena Blvd	Signal	AM	21.8	C
		PM	16.0	B
7. Napa St / Morena Blvd	Signal	AM	27.0	C
		PM	32.7	C
8. Linda Vista Rd / Morena Blvd	Signal	AM	15.5	B
		PM	17.5	B
9. Linda Vista Rd / Napa St	Signal	AM	37.9	D
		PM	52.6	D
10. Linda Vista Rd / Marian Way	Signal	AM	28.4	C
		PM	29.8	C
11. Linda Vista Rd / Colusa St	MSSC [c]	AM	23.5	C
		PM	39.3	E
12. Linda Vista Rd / Alcala Pkwy	Signal	AM	28.9	C
		PM	28.2	C
13. Linda Vista Rd / Alcala Apts Ent	MSSC	AM	17.0	C
		PM	27.8	D

TABLE 6–2
EXISTING INTERSECTION OPERATIONS

Intersection	Control Type	Peak Hour	Existing	
			Delay [a]	LOS [b]
14. Linda Vista Rd / Via Las Cumbres	Signal	AM	25.4	C
		PM	28.2	C
15. Linda Vista Rd / Kramer St	Signal	AM	10.6	B
		PM	9.4	A
16. Linda Vista Rd / Comstock St	Signal	AM	18.8	B
		PM	26.5	C
17. Linda Vista Rd / Ulric St	Signal	AM	18.0	B
		PM	31.0	C
18. Linda Vista Rd / Genesee Ave	Signal	AM	51.0	D
		PM	71.2	E
19. Friars Rd / Sea World Dr	Signal	AM	13.5	B
		PM	18.6	B
20. Friars Rd / Napa St	Signal	AM	14.5	B
		PM	11.8	B
21. Friars Rd / Colusa St	Signal	AM	11.4	B
		PM	12.9	B
22. Friars Rd / Via Las Cumbres	Signal	AM	12.6	B
		PM	13.9	B
23. Friars Rd / Fashion Valley Rd	Signal	AM	12.1	B
		PM	23.7	C
24. Friars Rd / Via de la Moda	Signal	AM	8.3	A
		PM	14.8	B
25. Friars Rd / Avenida de las Tiendas	Signal	AM	9.3	A
		PM	18.6	B
26. Friars Rd / Ulric St / SR 163 SB Ramps	Signal	AM	58.0	E
		PM	81.3	F

TABLE 6–2
EXISTING INTERSECTION OPERATIONS

Intersection	Control Type	Peak Hour	Existing	
			Delay [a]	LOS [b]
27. Friars Rd / 163 NB Ramps	Signal	AM	20.6	C
		PM	24.7	C

Footnotes:

a. Average intersection delay per vehicle in seconds.
b. Level of Service.
c. MSSC: Minor-Street-STOP-Controlled intersection. Minor Street left-turn delay and LOS reported.

SIGNALIZED		UNSIGNALIZED	
Delay	LOS	Delay	LOS
0.0 ≤ 10.0	A	0.0 ≤ 10.0	A
10.1 to 20.0	B	10.1 to 15.0	B
20.1 to 35.0	C	15.1 to 25.0	C
35.1 to 55.0	D	25.1 to 35.0	D
55.1 to 80.0	E	35.1 to 50.0	E
≥ 80.1	F	≥ 50.1	F

TABLE 6–3
EXISTING SEGMENT OPERATIONS

Street Segment	Functional Classification [a]	LOS E Capacity [b]	Existing		
			ADT[c]	LOS [d]	V/C [e]
Sea World Drive					
Pacific Hwy to I-5 Ramps	5-Lane Major Road	45,000	31,969	C	0.710
Tecolote Road					
I-5 to Morena Blvd	4-Lane Major Road	40,000	24,008	C	0.600
Morena Boulevard					
Tecolote Rd to Buenos Ave	2-Lane Collector w/ TWLTL	15,000	15,598	F	1.040
Buenos Ave to W. Morena Blvd	2-Lane Collector w/ TWLTL	15,000	16,603	F	1.107
W. Morena Blvd to Napa St	4-Lane Major Road	40,000	28,903	C	0.723
Napa St to Linda Vista St	4-Lane Major Road	40,000	23,023	C	0.576
Linda Vista Rd to I-8 Ramps	4-Lane Major Road	40,000	37,129	E	0.928
Linda Vista Road					
Morena Blvd to Napa St	4-Lane Collector	30,000	22,190	D	0.740
Napa St to Marian Way/Mildred	4-Lane Collector	30,000	26,868	E	0.896
Marian Way/Mildred to Colusa St	4-Lane Collector	30,000	18,880	C	0.629
Colusa St to Alcala Pkwy	4-Lane Collector	30,000	18,938	C	0.631
Alcala Pkwy to Via Las Cumbres	4-Lane Collector	30,000	17,401	C	0.580
Via Las Cumbres to Kramer St	4-Lane Collector	30,000	14,381	C	0.479
Kramer St to Comstock St	4-Lane Major Road	40,000	15,480	B	0.387
Comstock St to Ulric St	4-Lane Collector	30,000	16,548	C	0.552
Ulric St to Genesee Ave	4-Lane Major Road	40,000	23,429	C	0.568
Friars Road					
Napa St to Colusa St	4-Lane Major Road	40,000	19,611	B	0.490
Colusa St to Via Las Cumbres	4-Lane Major Road	40,000	18,646	B	0.466
Via Las Cumbres to Fashion Valley Rd	4-Lane Major Road	40,000	24,046	C	0.601
Fashion Valley Rd to Via de la Moda	5-Lane Major Road	45,000	25,247	C	0.561
Via de la Moda to Avenida de las Tiendas	5-Lane Major Road	45,000	30,063	C	0.668
Avenida de las Tiendas to SR 163 SB Ramps	6-Lane Major Road	50,000	41,993	D	0.840

TABLE 6–3
EXISTING SEGMENT OPERATIONS

Street Segment	Functional Classification [a]	LOS E Capacity [b]	Existing		
			ADT[c]	LOS [d]	V/C [e]
Napa Street					
Friars Rd to Linda Vista Rd	4-Lane Collector	30,000	17,703	B	0.443
Linda Vista Rd to Morena Blvd	4-Lane Collector	30,000	24,265	C	0.607
Colusa Street					
Friars Rd to Linda Vista Road	2-Lane Collector	8,000	2,190	A	0.274
Via Las Cumbres					
Friars Rd to Linda Vista Rd	3-Lane Collector	15,000	7,858	C	0.524

Footnotes:
a. The current classification at which the roadway functions.
b. The capacity corresponding to the functional classification of the roadway per City of San Diego Classification table.
c. Average Daily Traffic.
d. Level of Service.
e. Volume to capacity ratio.

TABLE 6–4
EXISTING RAMP METER OPERATIONS

Location/Condition	Peak Hour	Peak Hour Flow F [a]	Discharge Rate R [b]	Excess Demand E [a]	Delay [c]	Queue [d]
Sea World Dr to NB I-5 – 2 SOV						
Existing	AM	652	965	0	0	0
	PM	624	972	0	0	0
Sea World Dr to SB I-5 – 1 SOV + 1 HOV						
Existing	AM	371 [e]	318	53	10	1,315
	PM	447 [e]	318	129	24	3,228

Footnotes:

a. Vehicles per hour per lane.

b. Ramp meter discharge rates obtained from Caltrans. Most restrictive rate used when a range of discharge rates are provided.

c. Calculated delay in minutes per lane.

d. Calculated queue length in feet per lane.

e. 15% Reduction in volume due to HOV lane.

General Notes:

1. SOV = Single Occupancy Vehicle, HOV = High Occupancy Vehicle.
2. Ramp meter analysis was conducted using the fixed rate approach, which produces unrealistic queue lengths and delays. A discussion of the maximum observed delay and maximum observed queue is provided in Section 6.3.3 of this study.

TABLE 6–5
EXISTING FREEWAY MAINLINE OPERATIONS

Freeway Segment	Dir.	# of Lanes [a]	Hourly Capacity [b]	ADT [c]	Peak Hour Volume		V/C [d]		LOS [e]	
					AM	PM	AM	PM	AM	PM
Interstate 5										
Sea World Drive to I-8	NB	4 / 1	9,200	206,700	7,545	7,337	0.820	0.798	D	C
	SB	4 / 2	10,400		7,428	7,139	0.714	0.686	C	C
Interstate 8										
Morena Boulevard to Taylor Street	WB	5	10,000	201,500	7,180	7,081	0.718	0.708	C	C
	EB	4 / 1	9,200		5,778	7,354	0.628	0.799	C	C

Footnotes:

a. Number of mainline lanes / number of auxiliary lanes.
b. Capacity calculated at 2000 vph per lane and 1200 vph per Auxiliary lane.
c. Existing ADT Volumes were obtained directly from the freeway Performance Measurement System (PeMS) website.
d. Volume to Capacity ratio.
e. Level of Service.

LOS	V/C
A	<0.41
B	0.62
C	0.8
D	0.92
E	1
F(0)	1.25
F(1)	1.35
F(2)	1.45
F(3)	>1.46

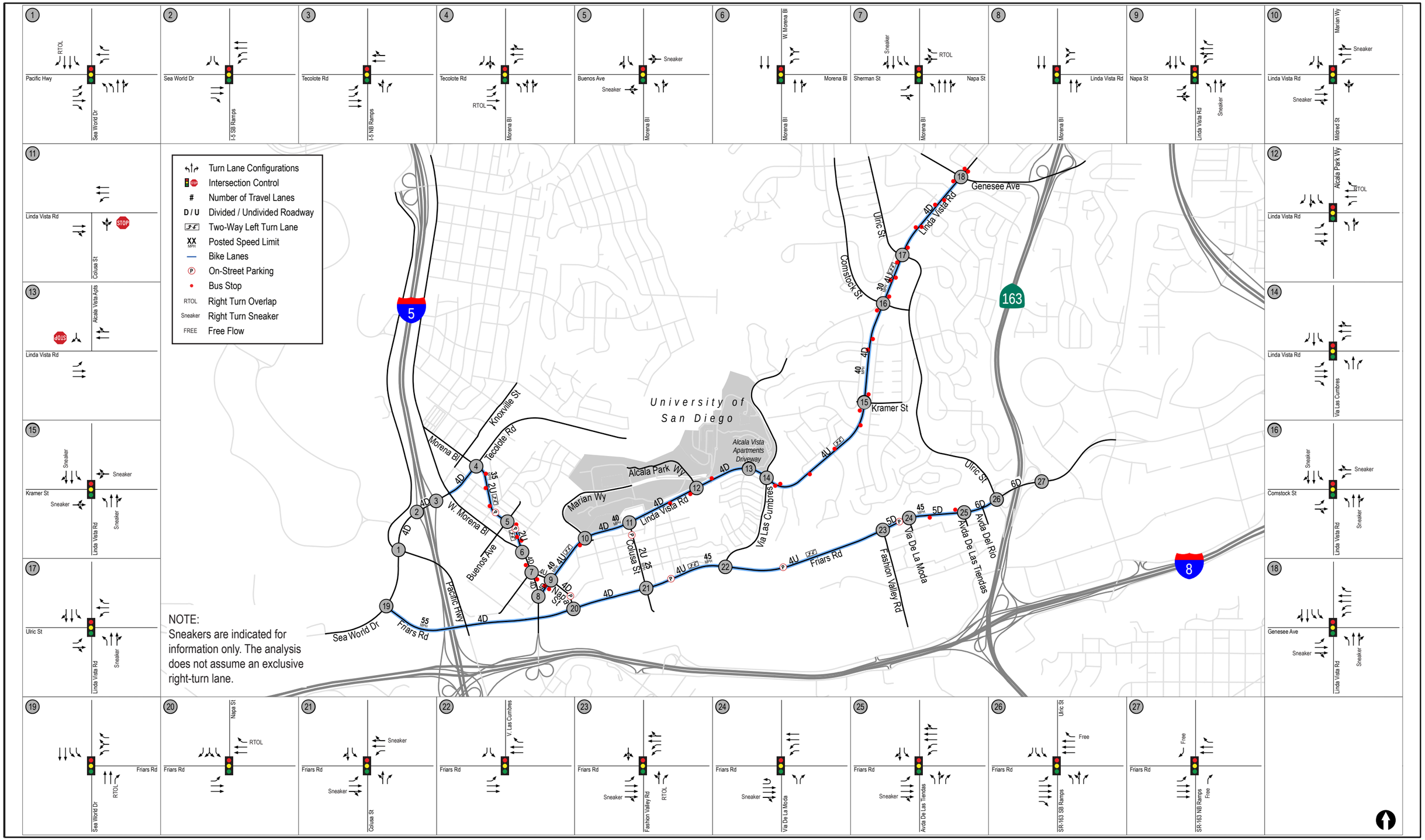

Linscott Law & Greenspan engineers

N:\2341\Figures\June 2016
Date: 06/02/16

Figure 6-1

Existing Conditions Diagram

USD Master Plan Update

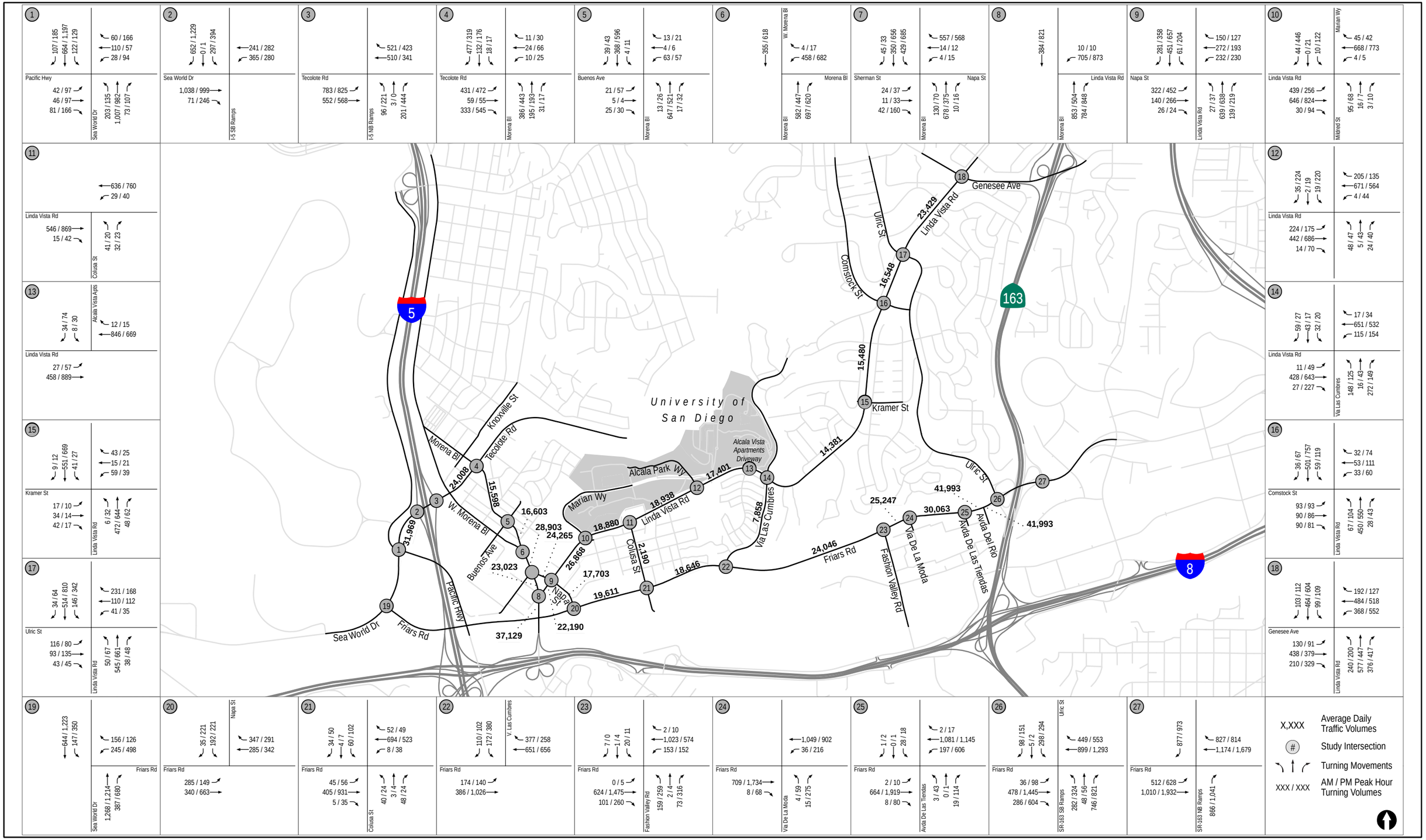

Intersection	Approach	Left	Through	Right
1	Pacific Hwy	107 / 185	664 / 1,197	122 / 129
	Sea World Dr	60 / 166	110 / 57	28 / 94
	Pacific Hwy	42 / 97	46 / 97	81 / 166
	Sea World Dr	203 / 135	1,007 / 982	73 / 107
2	Sea World Dr	652 / 1,229	0 / 1	297 / 394
	I-5 SB Ramps	241 / 282	365 / 280	
	Sea World Dr	1,038 / 999	71 / 246	
3	Tecolote Rd	521 / 423	510 / 341	
	I-5 NB Ramps	96 / 221	3 / 0	201 / 444
	Tecolote Rd	783 / 825	552 / 568	
4	Tecolote Rd	477 / 319	132 / 176	18 / 17
	Morena Bl	11 / 30	24 / 66	10 / 25
	Tecolote Rd	431 / 472	59 / 55	333 / 545
	Morena Bl	386 / 443	195 / 193	31 / 17
5	Buenos Ave	39 / 43	368 / 596	4 / 11
	Morena Bl	13 / 21	4 / 6	63 / 57
	Buenos Ave	21 / 57	5 / 4	25 / 30
	Morena Bl	13 / 26	647 / 521	17 / 32
6	W. Morena Bl		355 / 618	
	Morena Bl	4 / 17	458 / 682	
	Morena Bl	582 / 447	697 / 620	
7	Sherman St	45 / 33	350 / 656	429 / 685
	Napa St	557 / 568	14 / 12	4 / 15
	Sherman St	24 / 37	11 / 33	42 / 160
	Morena Bl	130 / 70	678 / 375	10 / 16
8	Morena Bl		384 / 821	
	Linda Vista Rd	10 / 10	705 / 873	
	Morena Bl	853 / 504	784 / 848	
9	Napa St	281 / 358	451 / 657	61 / 204
	Linda Vista Rd	150 / 127	272 / 193	232 / 230
	Napa St	322 / 452	140 / 266	26 / 24
	Linda Vista Rd	27 / 37	639 / 638	139 / 219
10	Linda Vista Rd	44 / 446	0 / 21	10 / 122
	Marian Wy	45 / 42	668 / 773	4 / 5
	Linda Vista Rd	439 / 256	646 / 824	30 / 94
	Mildred St	95 / 68	16 / 7	3 / 10
11	Linda Vista Rd		636 / 760	29 / 40
	Colusa St	41 / 20	32 / 23	
	Linda Vista Rd	546 / 869	15 / 42	
12	Linda Vista Rd	35 / 224	2 / 19	19 / 220
	Linda Vista Rd	205 / 135	671 / 564	4 / 44
	Linda Vista Rd	224 / 175	442 / 686	14 / 70
13	Alcala Vista Apts	34 / 74	8 / 30	
	Alcala Vista Apts	12 / 15	846 / 669	
	Linda Vista Rd	27 / 57	458 / 889	
14	Linda Vista Rd	59 / 27	43 / 17	32 / 20
	Linda Vista Rd	17 / 34	651 / 532	115 / 154
	Linda Vista Rd	11 / 49	428 / 643	27 / 227
	Via Las Cumbres	148 / 125	16 / 43	272 / 149
15	Kramer St	9 / 12	551 / 669	41 / 27
	Kramer St	43 / 25	15 / 21	59 / 39
	Kramer St	17 / 10	34 / 14	42 / 17
	Linda Vista Rd	6 / 32	472 / 644	48 / 62
16	Comstock St	36 / 67	501 / 757	59 / 119
	Comstock St	32 / 74	53 / 111	33 / 60
	Comstock St	93 / 93	90 / 86	90 / 81
	Linda Vista Rd	67 / 104	450 / 550	28 / 43
17	Ulric St	34 / 64	514 / 810	146 / 342
	Ulric St	231 / 168	110 / 112	41 / 35
	Ulric St	116 / 80	93 / 135	43 / 45
	Linda Vista Rd	50 / 67	545 / 661	38 / 48
18	Genesee Ave	103 / 112	464 / 604	99 / 109
	Genesee Ave	192 / 127	484 / 518	368 / 552
	Genesee Ave	130 / 91	438 / 379	210 / 329
	Linda Vista Rd	240 / 200	577 / 447	376 / 417
19	Friars Rd	644 / 1,223	147 / 350	
	Friars Rd	156 / 126	245 / 498	
	Sea World Dr	1,268 / 1,214	387 / 680	
20	Friars Rd	35 / 221	192 / 221	
	Napa St	347 / 291	285 / 342	
	Friars Rd	285 / 149	340 / 663	
21	Friars Rd	34 / 50	4 / 7	60 / 102
	Friars Rd	52 / 49	694 / 523	8 / 38
	Friars Rd	45 / 56	405 / 931	5 / 35
	Colusa St	40 / 24	3 / 4	48 / 24
22	Friars Rd	110 / 102	172 / 380	
	V. Las Cumbres	377 / 258	651 / 656	
	Friars Rd	174 / 140	386 / 1,026	
23	Friars Rd	7 / 0	1 / 4	20 / 11
	Friars Rd	2 / 10	1,023 / 574	153 / 152
	Friars Rd	0 / 5	624 / 1,475	101 / 260
	Fashion Valley Rd	159 / 259	2 / 4	73 / 316
24	Friars Rd		1,049 / 902	36 / 216
	Friars Rd	709 / 1,734	8 / 68	
	Via De La Moda	4 / 59	15 / 275	
25	Friars Rd	1 / 2	0 / 1	28 / 18
	Friars Rd	2 / 17	1,081 / 1,145	197 / 606
	Friars Rd	2 / 10	664 / 1,919	8 / 80
	Avda De Las Tiendas	3 / 43	0 / 1	19 / 114
26	Friars Rd	98 / 151	5 / 2	298 / 294
	Ulric St	449 / 553	899 / 1,293	
	Friars Rd	36 / 98	478 / 1,445	286 / 604
	SR-163 SB Ramps	282 / 324	48 / 56	746 / 821
27	Friars Rd	877 / 973		
	Friars Rd	827 / 814	1,174 / 1,679	
	Friars Rd	512 / 628	1,010 / 1,932	
	SR-163 NB Ramps	866 / 1,041		

X,XXX — Average Daily Traffic Volumes

(#) — Study Intersection

Turning Movements

XXX / XXX — AM / PM Peak Hour Turning Volumes

LINSCOTT LAW & GREENSPAN engineers

N:\2341\Figures\Jun 2016
Date: 06/02/16

Figure 6-2

Existing Traffic Volumes

USD MASTER PLAN UPDATE

7.0 CUMULATIVE PROJECTS

Cumulative projects are other projects in the study area that will add traffic to the local circulation system in the near future. Based on research conducted for the cumulative condition, nine (9) projects were identified for inclusion in the traffic study. Traffic generated by these projects was added to the Existing traffic volumes to develop the Near-Term without Project (Existing + Cumulative Projects) volumes. The following is a brief description of each of the cumulative projects in the general vicinity of the Project.

Table 7–1 summarizes the estimated trip generation for each of the cumulative projects.

1. **Civita / Quarry Falls, Phase I** – Phase I of this project is planned to be constructed and occupied under Near-Term conditions. Phase I will consist of about 2,477 dwelling units and 100,000 square feet of commercial space. The project is located east of the SR 163 and north of Friars Road. The entire project, once completed, will consist of a total of approximately 4,480 dwelling units, approximately 600,000 square feet of commercial space, 620,000 square feet of commercial office space and a recreation center.

2. **Union Tribune** – This project is planned to consist of 200 multi-family residential units and 3,000 square feet of retail amenity space located west of the SR 163 and I-8 interchange and south of Riverwalk Drive on a 12.86 acre site.

3. **Legacy International Center** – This project is planned redevelop an existing Mission Valley Resort Hotel and proposes 127 dwelling units and about 200,000 square feet of religious facility. The project is located west of the SR 163 and south of I-8 freeway in the Mission Valley Community.

4. **Camino Del Rio Mixed Use** – This project consists of 305 multi-family residential units and 9,000 square feet of office and retail space. The project is located east of the SR 163 and north of the I-8. This project has been constructed and occupied, but was not occupied during the time the existing counts were conducted. Therefore the project traffic was manually added as a cumulative project.

5. **Hazard Center Redevelopment** – This project is planned to consist of 473 residential dwelling units and about 4,200 square feet of commercial and retail space. The project is located east of the SR 163 and just south of Friars Road.

6. **Friars Road Multi Family –** This project is planned to redevelop a group of existing commercial office buildings and proposes about 320 multi-family residential units, including 1,542 square feet of shopkeeper space. The project is located just east of Fashion Valley Road and north of Friars Road.

7. **Town & Country, Phase I** – This project is planned to redevelop an existing hotel and residential land use and proposes a multi-use, transit oriented development. The project is

located west of the SR 163 and just north of I-8. Phase I of the project, to be completed by 2018, consists of the development of 700 hotel rooms, 142,137 square feet of convention space, and 435 multi-family dwelling units and the removal of 954 Hotel rooms, 165,062 square feet of convention space, 2,304 square feet of restaurant space and 14,298 square feet of spa space. The entire project, once completed, will consist of Phase I of the project plus an additional 405 multi-family dwelling units.

8. **Riverwalk Master Plan / Levi-Cushman Specific Plan** – This project is planned to consist of 1,329 dwelling units, 1,000 hotel rooms, 200,000 square feet of office space and 2,582,000 square feet of retail space. The project is located north of I-8 and west of Fashion Valley Road.

9. **Francis Parker School Master Plan Update –** This project proposes to increase student enrollment by 140 students. The school is located less than half mile east of USD and south of Linda Vista Road.

TABLE 7-1
CUMULATIVE PROJECTS – NEAR-TERM (YEAR 2019)

Project Name	Type of Development	Project Size	ADT
Quarry Falls (Civita)- Phase I	Residential Commercial	2,477 dwelling units 100,000 SF	17,450
Union Tribune Master Plan	Multi-Family Residential Specialty Retail	200 Units 3,000 SF	1,128
Legacy International Center	Timeshare Religious Facility	127 rooms 196,165 SF	1,805
Camino Del Rio Mixed Use	Multi-Family Residential Multi-Tenant Office Retail	305 dwelling units 5,000 SF 4,000 SF	1,432
Hazard Center Redevelopment [a]	Residential Commercial / Retail	473 multi-dwelling units 4,205 SF Commercial	950
Friars Road Multi-Family [b]	Multi-Family Residential Shopkeeper Space	320 dwelling units 1,542 SF	878
Town & Country – Phase I [c]	Hotel Convention Space Residential	700 Rooms 142,137 SF 435 dwelling units	(2,066)
Riverwalk Master Plan/Levi-Cushman Master	Residential Hotel Office Retail	1,329 dwelling units 1,000 Hotel Rooms 200,000 SF 2,582,000 SF	67,000
Francis Parker School Master Plan Update	Additional Students	140 Students	476

Footnotes:

a. This project includes the demolition of a 1,540 seat theatre.

b. This project includes the demolition of 20,548 SF of Office space.

c. Phase I of the project, to be completed by 2018, consists of demolishing 954 Hotel rooms, 165,062 SF of Convention space, 2,304 SF of restaurant space and 14,298 SF of Spa and developing the land uses listed in the table which generate less traffic. Thus, resulting in a negative net project ADT for Phase I of the project. Phase II of the Project is expected to be completed in 2022, and is calculated to generate no new trips as compared to existing conditions. The Project's Phase I and Phase II trip generation tables are included in ***Appendix S***.

Figure 7-1 shows the location of each of the cumulative projects. ***Figure 7–2*** depicts the Near-Term without Project (Existing + Cumulative projects) AM and PM peak hour and segment ADT volumes. ***Figure 7–3*** depicts the Near-Term (Existing + Cumulative projects) + Project AM and PM peak hour and segment ADT volumes, assuming the Near-Term scenario includes 5-years of campus growth at 150 additional FTE per year.

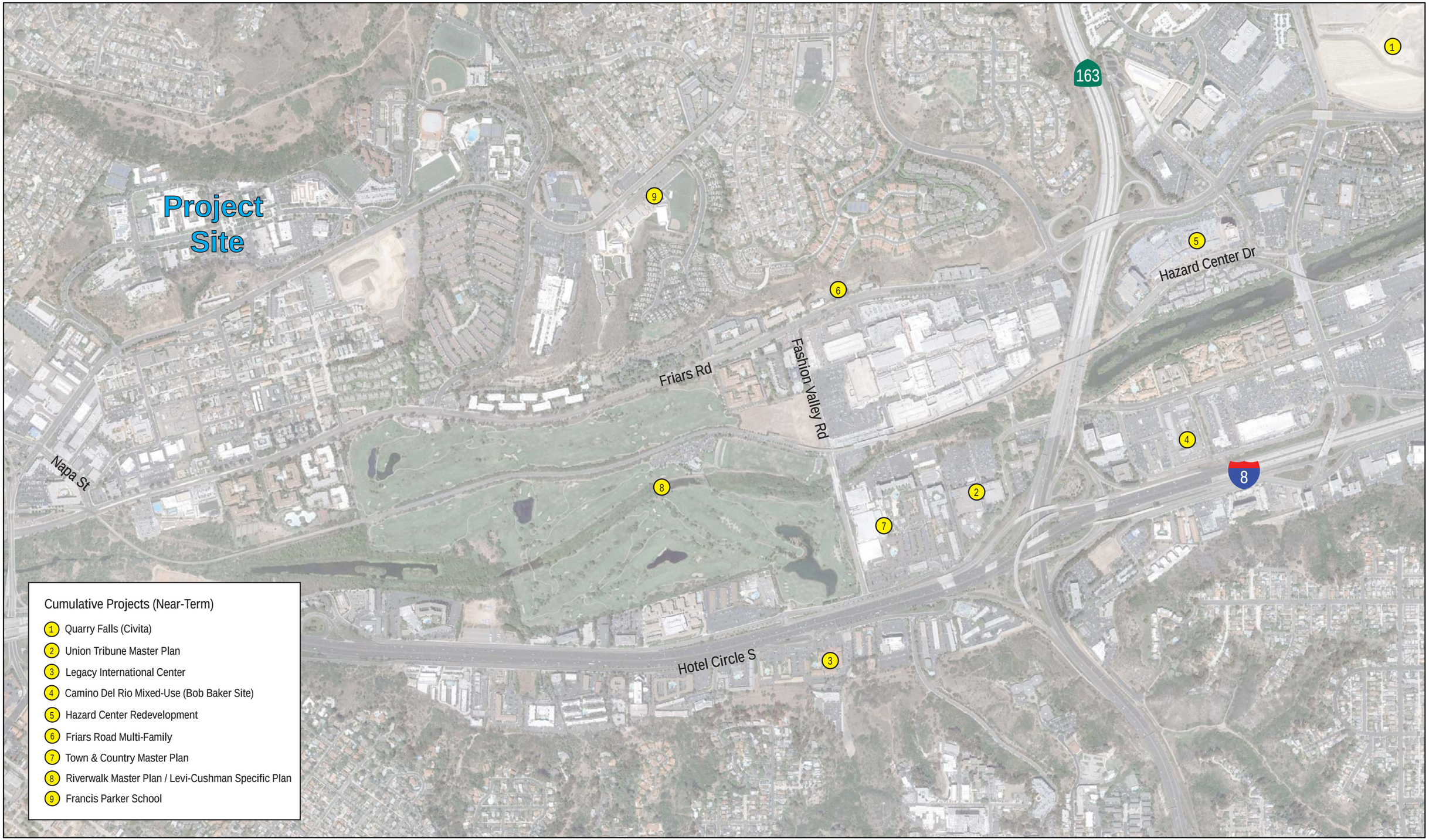

LINSCOTT LAW & GREENSPAN engineers

N:\2341\Figures\Feb 2016
Date: 02/12/16

Figure 7-1

Cumulative Projects Location Map

USD Master Plan Update

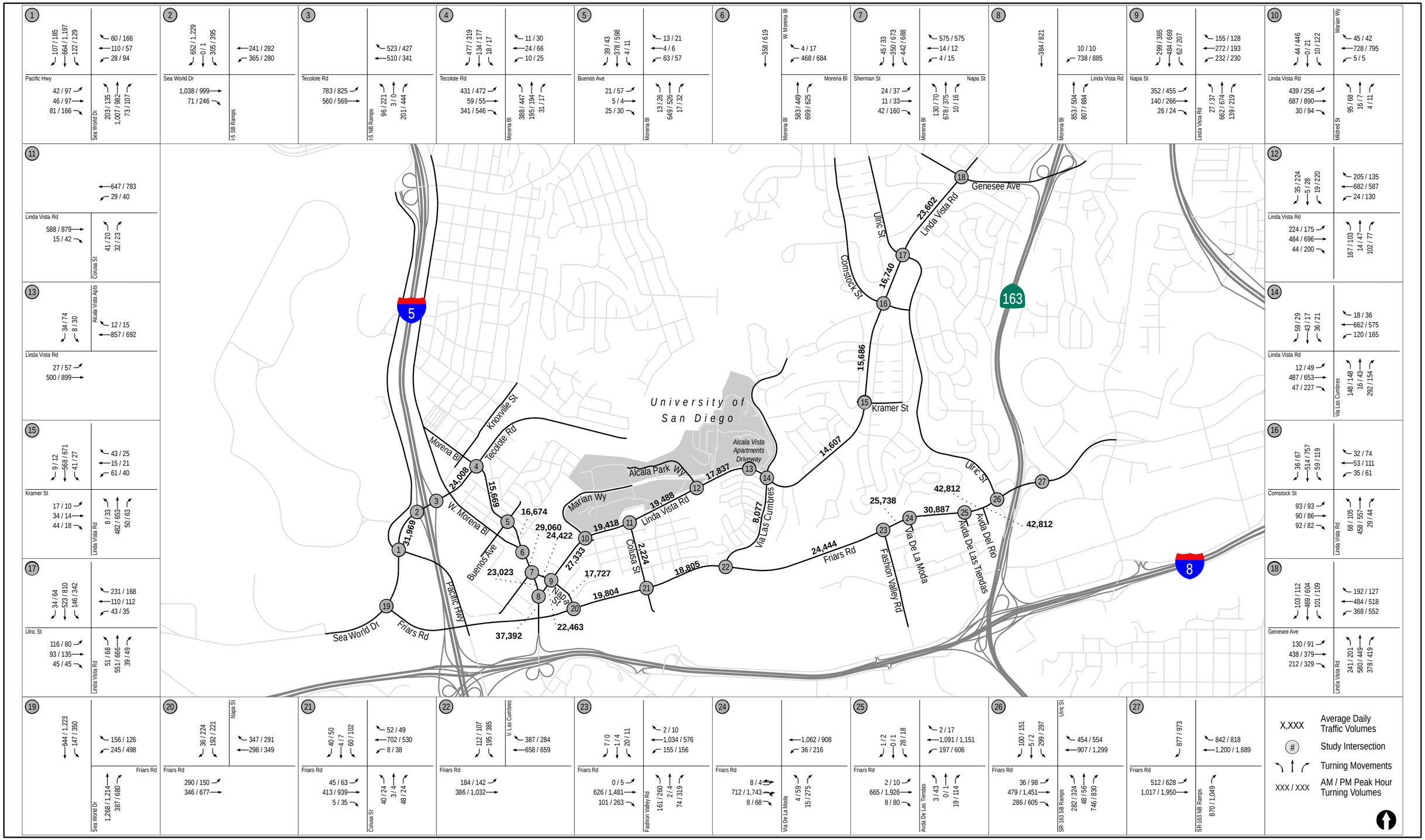

Intersection	Approach	Left	Through	Right
1	Pacific Hwy	107 / 185	664 / 1,197	122 / 129
	Sea World Dr	203 / 135	1,007 / 982	73 / 107
	Pacific Hwy	42 / 97	46 / 97	81 / 166
			110 / 57	60 / 166
			28 / 94	
2	Sea World Dr	652 / 1,229	0 / 1	305 / 395
	Sea World Dr	1,038 / 999	71 / 246	
	I-5 SB Ramps		241 / 282	365 / 280
3	Tecolote Rd	783 / 825	560 / 569	
	I-5 NB Ramps	96 / 221	3 / 0	201 / 444
			510 / 341	523 / 427
4	Tecolote Rd	477 / 319	134 / 177	18 / 17
	Morena Bl	388 / 447	195 / 194	31 / 17
	Morena Bl	431 / 472	59 / 55	341 / 546
			24 / 66	11 / 30
			10 / 25	
5	Buenos Ave	39 / 43	378 / 598	4 / 11
	Morena Bl	13 / 26	649 / 526	17 / 32
	Buenos Ave	21 / 57	5 / 4	25 / 30
			4 / 6	13 / 21
			63 / 57	
6			358 / 619	
	Morena Bl	583 / 449	699 / 625	
	W. Morena Bl		468 / 684	4 / 17
7	Sherman St	45 / 33	350 / 673	442 / 688
	Morena Bl	130 / 70	678 / 375	10 / 16
	Napa St	24 / 37	11 / 33	42 / 160
			14 / 12	575 / 575
			4 / 15	
8			384 / 821	
	Morena Bl	853 / 504	807 / 884	
	Linda Vista Rd		738 / 885	10 / 10
9	Napa St	299 / 365	484 / 669	62 / 207
	Linda Vista Rd	27 / 37	662 / 674	139 / 219
	Napa St	352 / 455	140 / 266	26 / 24
			272 / 193	155 / 128
			232 / 230	
10	Linda Vista Rd	44 / 446	0 / 21	10 / 122
	Mildred St	95 / 68	16 / 7	4 / 11
	Linda Vista Rd	439 / 256	687 / 890	30 / 94
			728 / 795	45 / 42
			5 / 5	
11	Linda Vista Rd	588 / 879	15 / 42	
	Colusa St	41 / 20	32 / 23	
			647 / 783	
			29 / 40	
12	Linda Vista Rd	35 / 224	5 / 28	19 / 220
	Linda Vista Rd	224 / 175	484 / 696	44 / 200
			682 / 587	205 / 135
			24 / 130	
13	Linda Vista Rd	34 / 74	8 / 30	
	Alcala Vista Apts		857 / 692	12 / 15
	Linda Vista Rd	27 / 57	500 / 899	
14	Linda Vista Rd	59 / 29	43 / 17	36 / 21
	Via Las Cumbres	148 / 148	16 / 43	292 / 154
	Linda Vista Rd	12 / 49	487 / 653	47 / 227
			662 / 575	18 / 36
			120 / 165	
15	Kramer St	9 / 12	568 / 671	41 / 27
	Linda Vista Rd	8 / 33	482 / 653	50 / 63
	Kramer St	17 / 10	34 / 14	44 / 18
			15 / 21	43 / 25
			61 / 40	
16	Comstock St	36 / 67	514 / 757	59 / 119
	Linda Vista Rd	68 / 105	458 / 557	29 / 44
	Comstock St	93 / 93	90 / 86	92 / 82
			53 / 111	32 / 74
			35 / 61	
17	Ulric St	34 / 64	522 / 810	146 / 342
	Linda Vista Rd	51 / 68	551 / 666	39 / 49
	Ulric St	116 / 80	93 / 135	45 / 45
			110 / 112	231 / 168
			43 / 35	
18	Genesee Ave	103 / 112	469 / 604	101 / 109
	Linda Vista Rd	241 / 201	580 / 449	378 / 419
	Genesee Ave	130 / 91	438 / 379	212 / 329
			484 / 518	192 / 127
			368 / 552	
19	Sea World Dr	1,268 / 1,214	387 / 680	
	Friars Rd	644 / 1,223	147 / 350	
			245 / 498	156 / 126
20	Friars Rd	36 / 224	192 / 221	
	Napa St		298 / 349	347 / 291
	Friars Rd	290 / 150	346 / 677	
21	Colusa St	40 / 24	3 / 4	48 / 24
	Friars Rd	40 / 50	4 / 7	60 / 102
		45 / 63	413 / 939	5 / 35
			702 / 530	52 / 49
			8 / 38	
22	Friars Rd	184 / 142	386 / 1,032	
	V. Las Cumbres		658 / 659	387 / 284
		112 / 107	195 / 385	
23	Fashion Valley Rd	161 / 280	2 / 4	74 / 319
	Friars Rd	0 / 5	626 / 1,481	101 / 263
			1,034 / 576	2 / 10
			155 / 156	
24	Via De La Moda	4 / 59	15 / 275	
	Friars Rd	8 / 4	712 / 1,743	8 / 68
			36 / 216	1,062 / 908
25	Avda De Las Tiendas	3 / 43	0 / 1	19 / 114
	Friars Rd	1 / 2	0 / 1	28 / 18
		2 / 10	665 / 1,926	8 / 80
			1,091 / 1,151	2 / 17
			197 / 606	
26	SR-163 SB Ramps	282 / 324	48 / 56	746 / 830
	Friars Rd	100 / 151	5 / 2	299 / 297
		36 / 98	479 / 1,451	286 / 605
	Ulric St		907 / 1,299	454 / 554
27	SR-163 NB Ramps	870 / 1,049		
	Friars Rd	877 / 973		
		512 / 628	1,017 / 1,950	
			1,200 / 1,689	842 / 818

X,XXX	Average Daily Traffic Volumes
#	Study Intersection
↰ ↑ ↱	Turning Movements
XXX / XXX	AM / PM Peak Hour Turning Volumes

LINSCOTT LAW & GREENSPAN engineers

N:\2341\Figures\June 2016
Date: 06/02/16

Figure 7-2

Near-Term (Existing + Cumulative Projects) Traffic Volumes

USD MASTER PLAN UPDATE

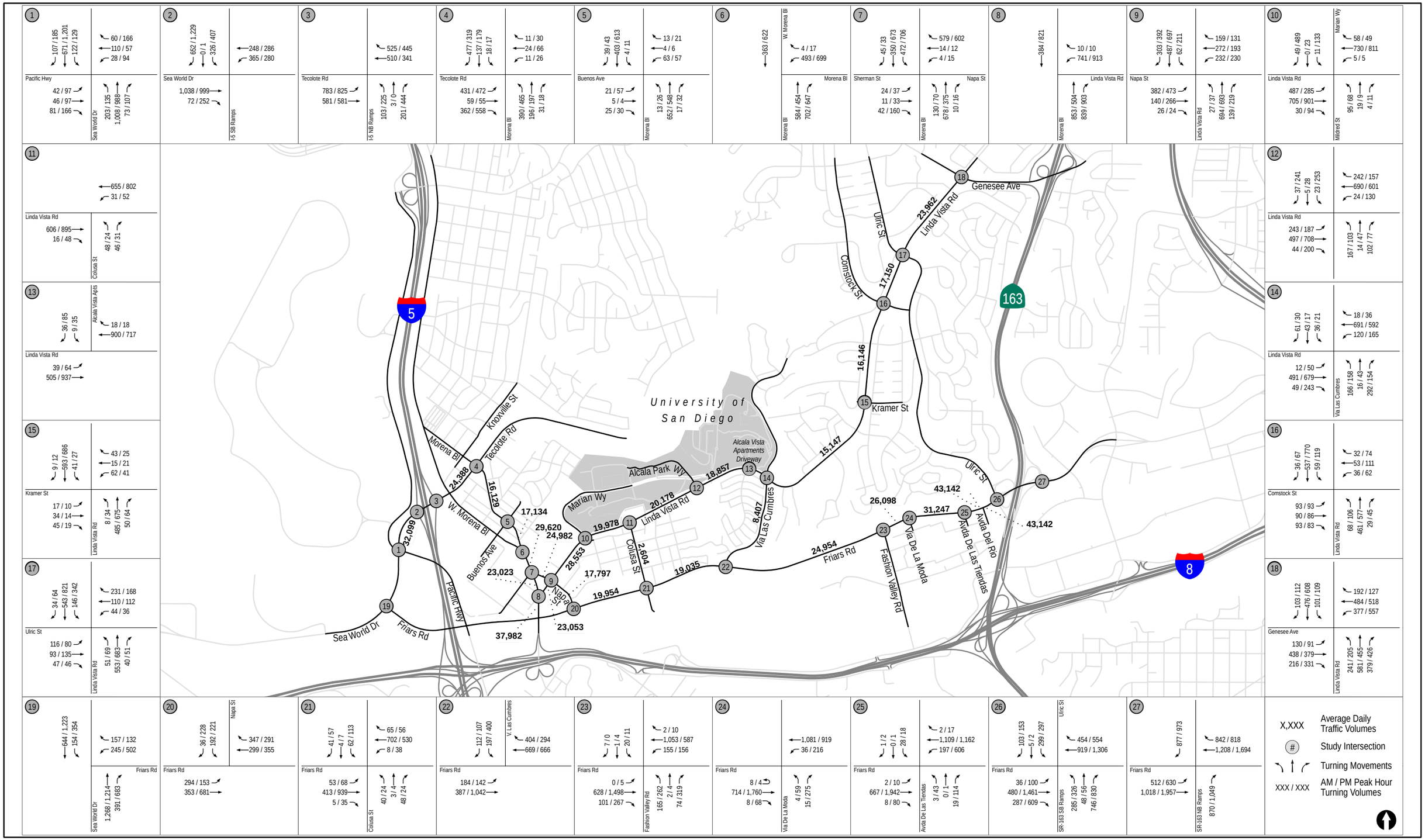

Linscott Law & Greenspan engineers

N:\2341\Figures\June 2016
Date: 06/02/16

Figure 7-3

Near-Term (Existing + Cumulative Projects) + Near-Term Project Traffic Volumes

USD Master Plan Update

8.0 ANALYSIS OF NEAR-TERM (2019) SCENARIOS

The following section presents the analysis of study area intersections, street segments, freeway segments, and ramp meters under Near-Term (2019) conditions without and with the Project.

8.1 Near-Term Conditions

In assessing the impacts of the Project, it was necessary to review planned, on-going, and future roadway improvements in the study area.

For the purposes of this traffic study, the implementation of a number of local and regional roadway improvements were considered based on coordination with City staff and information provided in the *Linda Vista and Mission Valley Public Facilities Financing Plans* (PFFP).

The Near-Term scenario assumes Project T5 of Linda Vista's PFFP to be complete, which includes lengthening the westbound left-turn pockets on Genesee Avenue to provide 300' of vehicle storage, restriping the west leg of Genesee Avenue to provide a dedicated eastbound right-turn lane, and widening Linda Vista Road to provide a dedicated northbound right-turn lane. These improvements were under construction at the time this study was prepared. ***Appendix S*** contains the PFFP improvement plan sheet for Linda Vista Road / Genesee Avenue.

Figure 8–1 depicts the network improvements for the Near-Term scenario.

8.2 Near-Term Analysis

8.2.1 *Intersection Analysis*

Table 8-1 summarizes the Near-Term peak hour intersection operations. As seen in *Table 8-1*, the following intersections are calculated to operate at LOS E or worse:

11. Linda Vista Road / Colusa Street – LOS E during the PM peak hour
18. Linda Vista Road / Genesee Avenue –LOS E during the PM peak hour
26. Friars Road / Ulric Street / SR 163 SB Ramps – LOS E during the AM and LOS F during the PM peak hours

Appendix F contains the Near-Term peak hour intersection analysis worksheets.

8.2.2 *Segment Operations*

Table 8-2 summarizes the Near-Term segment operations. The following segments are calculated to operate at LOS E or worse:

- Morena Boulevard: Tecolote Road to Buenos Avenue – LOS F
- Morena Boulevard: Buenos Avenue to W. Morena Boulevard – LOS F
- Morena Boulevard: Linda Vista Road to I-8 Ramps – LOS E
- Linda Vista Road: Napa Street to Marian Way – LOS E

8.2.3 *Ramp Meter Operations*

Table 8-3 summarizes the Near-Term ramp meter operations at the I-5 / Sea World Drive / Tecolote Road NB and SB on-ramps. As seen in *Table 8-3*, the NB on-ramp is calculated to have no delay during the AM and PM peak hours and the SB on-ramp is calculated to have 10 minutes of delay during the AM peak hour and 24 minutes of delay in the PM peak hour. It should be noted that the ramp meter analysis was conducted using the fixed rate approach, which generally tends to produce unrealistic queue lengths and delays, as discussed further in Section 6.3.3 of this study.

8.2.4 *Freeway Mainline Operations*

Table 8-4 summarizes the Near-Term freeway mainline operations. As seen in *Table 8-4*, the study area freeway mainline segments are calculated to operate at acceptable levels of service during the AM and PM peak hours.

8.3 Near-Term + Project Analysis

8.3.1 *Intersection Analysis*

Table 8-1 summarizes the Near-Term + Project peak hour intersection operations. As seen in *Table 8-1*, with the addition of Project traffic, the following intersections are calculated to operate at LOS E or worse:

9. Linda Vista Road / Napa Street – LOS E during the PM peak hour
11. Linda Vista Road / Colusa Street – LOS F during the PM peak hour
13. Linda Vista Road / Alcala Apartments Entrance – LOS E during the PM peak hour
18. Linda Vista Road / Genesee Avenue –LOS E during the PM peak hour
26. Friars Road / Ulric Street / SR 163 SB Ramps – LOS E during the AM and LOS F during the PM peak hours

Project related <u>significant direct impacts</u> are calculated at the following intersections, based on the City of San Diego significance criteria:

9. Linda Vista Road / Napa Street
11. Linda Vista Road / Colusa Street
13. Linda Vista Road / Alcala Apartments Entrance

Appendix G contains the Near-Term + Project peak hour intersection analysis worksheets.

8.3.2 *Segment Operations*

Table 8-2 summarizes the Near-Term + Project segment operations. The following segments are calculated to operate at LOS E or worse with the addition of Project traffic:

- Morena Boulevard: Tecolote Road to Buenos Avenue – LOS F
- Morena Boulevard: Buenos Avenue to W. Morena Boulevard – LOS F
- Morena Boulevard: Linda Vista Road to I-8 Ramps – LOS E

- Linda Vista Road: Napa Street to Marian Way – LOS E

A Project related significant direct impact is calculated along the following segment, based on the City of San Diego significance criteria:

- Linda Vista Road: Napa Street to Marian Way

The City's significance thresholds are exceeded along the three segments of Morena Boulevard calculated to operate at LOS E or worse. However, since the segments are built to their ultimate classification, an alternative analysis was conducted to assess segment impacts.

The analysis determines whether 1) the intersections at the ends of the segment are calculated to operate at an acceptable LOS with the project; and 2) a peak hour Highway Capacity Manual (HCM) arterial analysis for the same segment shows that the segment operates at an acceptable LOS with the project. If both intersections at the end of the segment operate acceptably, and the peak hour HCM arterial analysis for the same segment shows the segment operates acceptably then the project impacts are determined to be less than significant and no mitigation is required.

As noted above, the subject segments along Morena Boulevard are currently built to their ultimate classification. The adjacent intersections are calculated to operate at LOS D or better during the AM and PM peak hours under Near-Term + Project conditions, as shown in *Table 8-1*. Arterial analysis for the subject segments along Morena Boulevard is provided in ***Table 8-5.*** As shown in *Table 8-5*, the subject segments are calculated to operate at LOS D or better in both directions during the AM and PM peak hours under Near-Term + Project conditions.

Therefore, since the segments are built to their ultimate classification and both alternative analysis conditions are met, the project impacts are determined to be less than significant and no mitigation is required along these three segments.

Appendix G includes the Near-Term + Project peak hour arterial analysis worksheets.

8.3.3 *Ramp Meter Operations*

Table 8-3 summarizes the Near-Term + Project ramp meter operations at the I-5 / Sea World Drive / Tecolote Road NB and SB on-ramps. As seen in *Table 8-3*, with the addition of Project traffic, the NB on-ramp is calculated to have no delay during the AM and PM peak hours and the SB on-ramp is calculated to have 10 minutes of delay during the AM peak hour and 25 minutes of delay during the PM peak hour.

While the SB on-ramp is calculated to have 25 minutes of delay during the PM peak hour, which is considered excessive under City of San Diego guidelines, a Project related significant direct impact is not calculated since the Project adds only one (1) minute of delay, and the corresponding freeway mainline segment (I-5 SB between SeaWorld Drive and I-8) is calculated to operate at LOS C with the addition of Project traffic, as shown in *Table 8-4*.

It should be noted that the ramp meter analysis was conducted using the fixed rate approach, which generally tends to produce unrealistic queue lengths and delays, as discussed further in Section 6.3.3 of this study.

8.3.4 *Freeway Mainline Operations*

Table 8-4 summarizes the Near-Term + Project freeway mainline operations. As seen in *Table 8-4*, with the addition of Project traffic, the study area freeway mainline segments are calculated to operate at acceptable levels of service during the AM and PM peak hours. Based on the City of San Diego significance criteria, no Project related significant direct freeway mainline impacts are calculated.

TABLE 8–1
NEAR-TERM INTERSECTION OPERATIONS

Intersection	Control Type	Peak Hour	Near Term		Near Term + Project		Δ Delay [c]	Impact
			Delay [a]	LOS [b]	Delay	LOS		
1. Sea World Dr / Pacific Hwy	Signal	AM	19.0	B	19.0	B	0.0	None
		PM	26.4	C	26.4	C	0.0	None
2. Sea World Dr / I-5 SB Ramps	Signal	AM	27.8	C	28.7	C	0.9	None
		PM	28.4	C	29.0	C	0.6	None
3. Sea World Dr / I-5 NB Ramps	Signal	AM	29.8	C	31.1	C	1.3	None
		PM	47.5	D	48.3	D	0.8	None
4. Tecolote Rd / Morena Blvd	Signal	AM	41.1	D	43.2	D	2.1	None
		PM	37.7	D	38.6	D	0.9	None
5. Buenos Ave / Morena Blvd	Signal	AM	9.9	A	10.0	A	0.1	None
		PM	11.8	B	11.8	B	0.0	None
6. Morena Blvd / W. Morena Blvd	Signal	AM	22.1	C	22.4	C	0.3	None
		PM	16.3	B	18.2	C	1.9	None
7. Napa St / Morena Blvd	Signal	AM	27.3	C	27.7	C	0.4	None
		PM	32.6	C	32.8	C	0.2	None
8. Linda Vista Rd / Morena Blvd	Signal	AM	16.0	B	16.0	B	0.0	None
		PM	17.7	B	18.0	B	0.3	None
9. Linda Vista Rd / Napa St	Signal	AM	39.1	D	40.6	D	1.5	None
		PM	53.5	D	**55.5**	**E**	**2.0**	**Direct**
10. Linda Vista Rd / Marian Way	Signal	AM	28.4	C	33.2	C	4.8	None
		PM	29.7	C	31.5	C	1.8	None
11. Linda Vista Rd / Colusa St	MSSC [d]	AM	25.6	C	28.5	D	2.9	None
		PM	**41.0**	**E**	**50.9**	**F**	**9.9**	**Direct**
12. Linda Vista Rd / Alcala Pkwy	Signal	AM	44.1	D	46.6	D	2.5	None
		PM	30.8	C	31.7	C	0.9	None
13. Linda Vista Rd / Alcala Apts Ent	MSSC	AM	17.4	C	19.4	C	2.0	None
		PM	29.6	D	**38.5**	**E**	**8.9**	**Direct**

TABLE 8–1
NEAR-TERM INTERSECTION OPERATIONS

Intersection	Control Type	Peak Hour	Near Term		Near Term + Project		Δ Delay [c]	Impact
			Delay [a]	LOS [b]	Delay	LOS		
14. Linda Vista Rd / Via Las Cumbres	Signal	AM	25.4	C	26.2	C	0.8	None
		PM	29.9	C	30.5	C	0.6	None
15. Linda Vista Rd / Kramer St	Signal	AM	10.6	B	10.9	B	0.3	None
		PM	9.5	A	9.5	A	0.0	None
16. Linda Vista Rd / Comstock St	Signal	AM	18.7	B	18.8	B	0.1	None
		PM	26.4	C	26.6	C	0.2	None
17. Linda Vista Rd / Ulric St	Signal	AM	18.0	B	18.0	B	0.0	None
		PM	31.0	C	32.8	C	1.8	None
18. Linda Vista Rd / Genesee Ave	Signal	AM	46.7	D	47.4	D	0.7	None
		PM	68.5	E	69.5	E	1.0	None
19. Friars Rd / Sea World Dr	Signal	AM	13.5	B	13.6	B	0.1	None
		PM	18.6	B	18.7	B	0.1	None
20. Friars Rd / Napa St	Signal	AM	14.6	B	14.7	B	0.1	None
		PM	11.9	B	12.0	B	0.1	None
21. Friars Rd / Colusa St	Signal	AM	11.6	B	12.1	B	0.5	None
		PM	13.1	B	13.8	B	0.7	None
22. Friars Rd / Via Las Cumbres	Signal	AM	13.5	B	13.7	B	0.2	None
		PM	14.2	B	14.7	B	0.5	None
23. Friars Rd / Fashion Valley Rd	Signal	AM	12.2	B	12.2	B	0.0	None
		PM	24.0	C	24.0	C	0.0	None
24. Friars Rd / Via de la Moda	Signal	AM	8.3	A	8.4	A	0.1	None
		PM	14.8	B	14.8	B	0.0	None
25. Friars Rd / Avenida de las Tiendas	Signal	AM	9.2	A	9.2	A	0.0	None
		PM	18.4	B	18.4	B	0.0	None
26. Friars Rd / Ulric St / SR 163 SB Ramps	Signal	AM	60.9	E	61.4	E	0.5	None
		PM	92.9	F	93.8	F	0.9	None

TABLE 8–1
NEAR-TERM INTERSECTION OPERATIONS

Intersection	Control Type	Peak Hour	Near Term		Near Term + Project		Δ Delay [c]	Impact
			Delay [a]	LOS [b]	Delay	LOS		
27. Friars Rd / 163 NB Ramps	Signal	AM	20.7	C	20.8	C	0.1	None
		PM	25.0	C	25.3	C	0.3	None

Footnotes:

a. Average intersection delay per vehicle in seconds.
b. Level of Service.
c. Increase in delay due to project traffic.
d. MSSC: Minor-Street-STOP-Controlled intersection. Minor Street left-turn delay and LOS reported.

General Notes:

Bold and shaded indicates potential significant impact.

SIGNALIZED		UNSIGNALIZED	
Delay	LOS	Delay	LOS
0.0 ≤ 10.0	A	0.0 ≤ 10.0	A
10.1 to 20.0	B	10.1 to 15.0	B
20.1 to 35.0	C	15.1 to 25.0	C
35.1 to 55.0	D	25.1 to 35.0	D
55.1 to 80.0	E	35.1 to 50.0	E
≥ 80.1	F	≥ 50.1	F

TABLE 8–2
NEAR-TERM SEGMENT OPERATIONS

Street Segment	Functional Classification [a]	LOS E Capacity [b]	Near-Term			Near-Term + Project			Δ V/C [f]	Impact Type
			ADT[c]	LOS [d]	V/C [e]	ADT	LOS	V/C		
Sea World Drive										
Pacific Hwy to I-5 Ramps	5-Lane Major Road	45,000	31,969	C	0.710	32,099	C	0.713	0.003	None
Tecolote Road										
I-5 to Morena Blvd	4-Lane Major Road	40,000	24,008	C	0.600	24,388	C	0.610	0.010	None
Morena Boulevard										
Tecolote Rd to Buenos Ave	2-Lane Collector w/ TWLTL	15,000	15,669	F	1.045	16,129	F	1.075	0.030	None[g]
Buenos Ave to W. Morena Blvd	2-Lane Collector w/ TWLTL	15,000	16,664	F	1.112	17,134	F	1.142	0.030	None[g]
W. Morena Blvd to Napa St	4-Lane Major Road	40,000	29,060	C	0.727	29,620	C	0.741	0.014	None
Napa St to Linda Vista St	4-Lane Major Road	40,000	23,023	C	0.576	23,023	C	0.576	0.000	None
Linda Vista Rd to I-8 Ramps	4-Lane Major Road	40,000	37,392	E	0.935	37,982	E	0.950	0.015	None[g]
Linda Vista Road										
Morena Blvd to Napa St	4-Lane Collector	30,000	22,463	D	0.749	23,053	D	0.768	0.019	None
Napa St to Marian Way/Mildred	4-Lane Collector	30,000	**27,333**	**E**	**0.911**	**28,553**	**E**	**0.952**	**0.041**	**Direct**
Marian Way/Mildred to Colusa St	4-Lane Collector	30,000	19,418	C	0.647	19,978	C	0.666	0.019	None
Colusa St to Alcala Pkwy	4-Lane Collector	30,000	19,488	C	0.650	20,178	D	0.673	0.023	None
Alcala Pkwy to Via Las Cumbres	4-Lane Collector	30,000	17,837	C	0.595	18,857	C	0.629	0.034	None
Via Las Cumbres to Kramer St	4-Lane Collector	30,000	14,607	C	0.487	15,147	C	0.505	0.018	None
Kramer St to Comstock St	4-Lane Major Road	40,000	15,686	B	0.392	16,146	B	0.404	0.012	None
Comstock St to Ulric St	4-Lane Collector	30,000	16,740	C	0.558	17,150	C	0.572	0.014	None
Ulric St to Genesee Ave	4-Lane Major Road	40,000	23,602	C	0.590	23,962	C	0.599	0.009	None

CONTINUED ON THE NEXT PAGE

TABLE 8-2 (CONTINUED)
NEAR-TERM SEGMENT OPERATIONS

Street Segment	Functional Classification [a]	LOS E Capacity [b]	Near-Term			Near-Term + Project			Δ V/C [f]	Impact Type
			ADT[c]	LOS [d]	V/C [e]	ADT	LOS	V/C		
Friars Road										
Napa St to Colusa St	4-Lane Major Road	40,000	19,804	B	0.495	19,954	B	0.499	0.004	None
Colusa St to Via Las Cumbres	4-Lane Major Road	40,000	18,805	B	0.470	19,035	B	0.476	0.006	None
Via Las Cumbres to Fashion Valley Rd	4-Lane Major Road	40,000	24,444	C	0.611	24,954	C	0.624	0.013	None
Fashion Valley Rd to Via de la Moda	5-Lane Major Road	45,000	25,738	C	0.572	26,098	C	0.580	0.008	None
Via de la Moda to Avenida de las Tiendas	5-Lane Major Road	45,000	30,887	C	0.686	31,247	C	0.694	0.008	None
Avenida de las Tiendas to SR 163 SB Ramps	6-Lane Major Road	50,000	42,812	D	0.856	43,142	D	0.863	0.007	None
Napa Street										
Friars Rd to Linda Vista Rd	4-Lane Collector	30,000	17,727	B	0.443	17,797	B	0.445	0.002	None
Linda Vista Rd to Morena Blvd	4-Lane Collector	30,000	24,422	C	0.611	24,982	C	0.625	0.014	None
Colusa Street										
Friars Rd to Linda Vista Road	2-Lane Collector	8,000	2,224	A	0.278	2,604	B	0.326	0.048	None
Via Las Cumbres										
Friars Rd to Linda Vista Rd	3-Lane Collector	15,000	8,077	C	0.538	8,407	C	0.560	0.022	None

Footnotes:
a. The current classification at which the roadway functions.
b. The capacity corresponding to the functional classification of the roadway per City of San Diego Classification table.
c. Average Daily Traffic.
d. Level of Service.
e. Volume to capacity ratio.
f. Increase in V/C ratio due to Project traffic.
g. Peak hour arterial analysis indicates LOS D or better operations. Therefore, no significant impact is calculated.

General Notes:
Bold and shaded indicates potential significant impact.

TABLE 8–3
NEAR-TERM RAMP METER OPERATIONS

Location/Condition	Peak Hour	Peak Hour Flow F [a]	Discharge Rate R [b]	Excess Demand E [a]	Delay [c]	Queue [d]	Impact[f]
Sea World Drive to NB I-5 – 2 SOV Lanes							
Near-Term	AM	666	965	0	0	0	-
	PM	634	972	0	0	0	-
Near-Term + Project	AM	667	965	0	0	0	None
	PM	643	972	0	0	0	None
Sea World Drive to SB I-5 – 1 SOV + 1 HOV Lane							
Near-Term	AM	371 [e]	318	53	10	1,315	-
	PM	447 [e]	318	129	24	3,228	-
Near-Term + Project	AM	371 [e]	318	53	10	1,336	None
	PM	452 [e]	318	134	25	3,355	None

Footnotes:

a. Vehicles per hour per lane.

b. Ramp meter discharge rates obtained from Caltrans. Most restrictive rate used when a range of discharge rates are provided.

c. Calculated delay in minutes per lane.

d. Calculated queue length in feet per lane.

e. 15% reduction in volume due to HOV lane.

f. Per City of San Diego Significance Criteria, the allowable increase in delay at a ramp meter with more than 15 minutes of delay and freeway LOS E is 2 minutes and at LOS F is 1 minute. While the SB on-ramp is calculated to have 25 minutes of delay during the PM peak hour, which is considered excessive under City of San Diego guidelines, a Project related significant direct impact is not calculated since the Project adds only one minute of delay, and the corresponding freeway mainline segment (I-5 SB between SeaWorld Drive and I-8) is calculated to operate at LOS C with the addition of Project traffic, as shown in *Table 8-4*.

General Notes:

1. SOV = Single Occupancy Vehicle, HOV = High Occupancy Vehicle.
2. Ramp meter analysis was conducted using the fixed rate approach, which produces unrealistic queue lengths and delays. A discussion of the maximum observed delay and maximum observed queue is provided in Section 6.3.3 of this study.

TABLE 8–4
NEAR-TERM FREEWAY MAINLINE SEGMENT OPERATIONS

Freeway and Segment	Direction, Number of Lanes [a] & Capacity [b]			Near-Term						Near-Term + Project						Delta [d]		Sig Impact?	
				Peak Hour Volume		V/C [c]		LOS		Peak Hour Volume		V/C		LOS					
				AM	PM	AM	PM	AM	PM	AM	PM	AM	PM	AM	PM	AM	PM	AM	PM
Interstate 5																			
Sea World Dr to I-8	NB	4M + 1A	9,200	7,583	7,362	0.824	0.800	D	D	7,590	7,366	0.825	0.801	D	D	0.001	0.001	No	No
	SB	4M + 2A	10,400	7,442	7,188	0.716	0.691	C	C	7,443	7,194	0.716	0.692	C	C	0.000	0.001	No	No
Interstate 8																			
Morena Blvd to Taylor St	WB	5M	10,000	7,194	7,127	0.719	0.713	C	C	7,202	7,132	0.720	0.713	C	C	0.001	0.000	No	No
	EB	4M + 1A	9,200	5,814	7,379	0.632	0.802	C	D	5,815	7,386	0.632	0.803	C	D	0.000	0.001	No	No

Footnotes:

a. "M" = Mainline, "A" = Auxiliary Lane.
b. Capacity = 2,000 vehicles per hour per lane (mainline), 1,200 vehicles per hour per lane (auxiliary).
c. Volume to Capacity ratio.
d. Increase in V/C ratio due to project traffic.

LOS	V/C
A	<0.41
B	0.62
C	0.8
D	0.92
E	1
F(0)	1.25
F(1)	1.35
F(2)	1.45
F(3)	>1.46

TABLE 8–5
NEAR-TERM + PROJECT ARTERIAL OPERATIONS

Arterial Segment	Peak Hour	Direction	Speed[a]	LOS[b]
Morena Blvd. Tecolote Road to Buenos Avenue	AM	NB	15.7	D
		SB	25.2	B
	PM	NB	15.3	D
		SB	23.6	C
Morena Blvd. Buenos Avenue to West Morena Boulevard	AM	NB	20.8	C
		SB	16.6	D
	PM	NB	21.9	C
		SB	16.1	D
Morena Blvd. Linda Vista Road to I-8	AM	NB	29.3	B
		SB	32.4	A
	PM	NB	29.2	B
		SB	32.4	A

Footnotes:
a. Speed in miles per hour.
b. Level of Service.

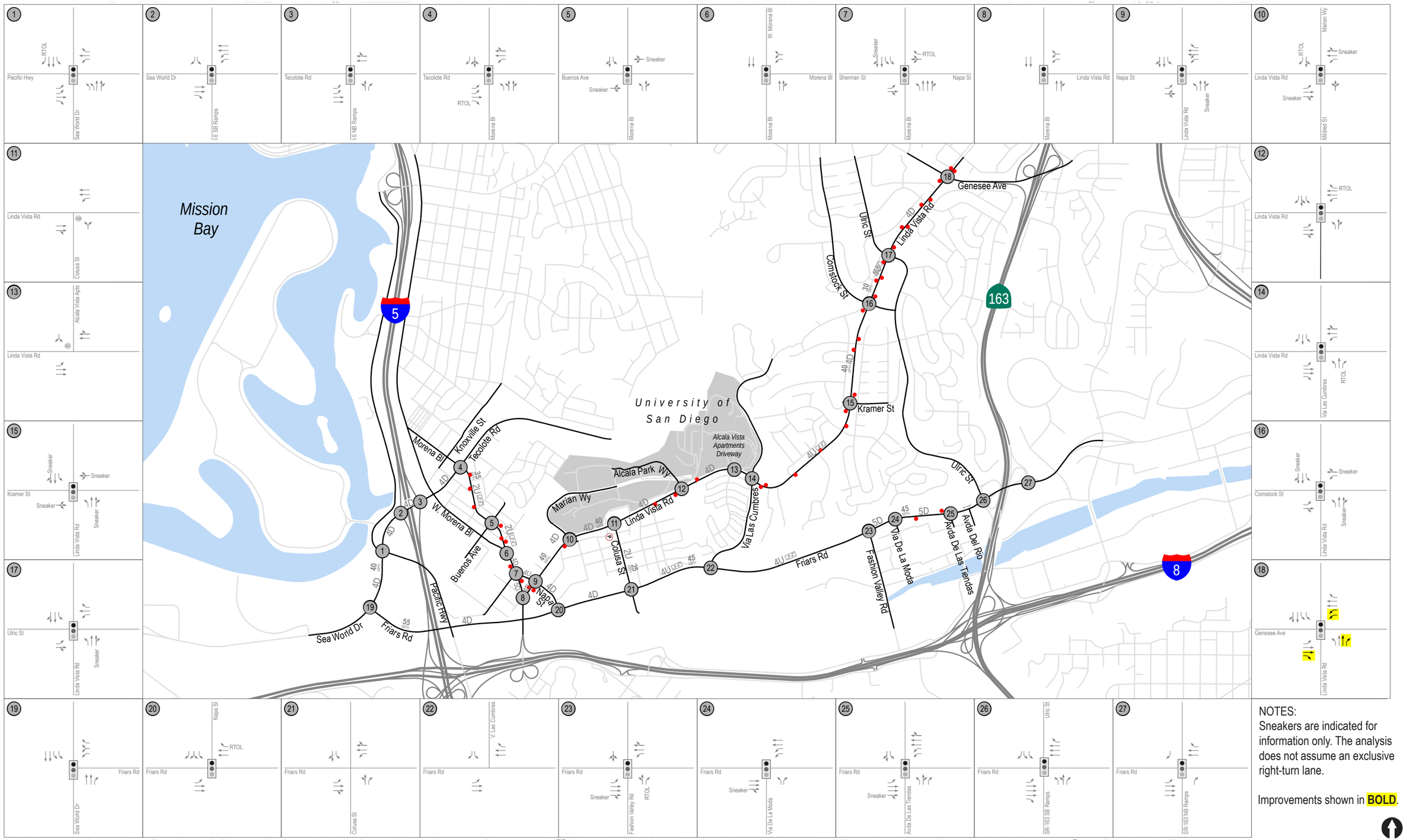

LINSCOTT LAW & GREENSPAN engineers

N:\2341\Figures\June 2016
Date: 06/02/16

Figure 8-1

Near-Term Network Improvements

USD MASTER PLAN UPDATE

9.0 ANALYSIS OF LONG-TERM (2035) SCENARIOS

The following section presents the analysis of study area intersections, street segments, freeway segments, and ramp meters under Long-Term (2035) conditions without and with the Project.

9.1 Long-Term (2035) Conditions

Planned Local and Regional Network Improvements

In assessing the impacts of the proposed development, it was necessary to review planned, on-going, and future network improvements in the study area.

For the purposes of this traffic study, the implementation of local and regional roadway improvements were assumed in place based on coordination with City staff and information provided in the *Linda Vista and Mission Valley Public Facilities Financing Plans* (PFFP).

The Long-Term (2035) scenario assumes Phase I of the SR 163 / Friars Road Interchange Project and the proposed extension of a two-lane Hazard Center Drive under SR 163. In addition the proposed extension of Camino de La Reina from Fashion Valley Road to Via Las Cumbres and the extension of Via Las Cumbres between Friars Road and Hotel Circle N. as proposed in the Levi-Cushman Specific Plan were assumed. This is considered reasonable as well as conservative as the analysis for the Project under Long-Term (2035) conditions assumes approximately 67,000 ADT from the Levi-Cushman Specific Plan, yet assumes only two of many improvements (on the basis of providing access and basic circulation) required by this Specific Plan.

Table 9–1 identifies the major Long-Term (2035) planned network improvements within the study area. ***Figure 9–1*** depicts the network improvements for the study area street segments and intersections.

Appendix S contains the Caltrans improvement plans for Phase I of the Friars Road / SR 163 Interchange Project.

TABLE 9-1
LONG-TERM (2035) NETWORK IMPROVEMENTS

Project Name (Community/Project No.)	Improvements	Schedule/ Funding
SR 163 / Friars Road Interchange – Phase I (Mission Valley / MV-14, 17, & 18) and SANDAG RTP 2050	Phase I of the project includes widening of Friars Road from Avenida de las Tiendas to Mission Center Road, including the Friars Road overcrossing and reconstructing the interchange improvements to ramp intersections. • Widening Friars Road overcrossing • Improving Frazee Road, Avenida de las Tiendas and Ulric Street intersections along Friars Road • Constructing a designated bike lane and improving pedestrian facilities.	Phase I is expected to open to traffic in 2018. Phase I funding is 100% secure. The project has also been included in the 2050 RTP under the Revenue Constrained scenario.
Hazard Center Drive Extension (Mission Valley / MV-15)	This project will extend Hazard Center Drive under SR 163. Based on coordination with City, only a 2-lane facility is proposed.	Project expected to be completed by 2035. *100% subdivider funding required for Hazard Center Redevelopment project to proceed.*
Camino De La Reina Extension – Fashion Valley Road to Via las Cumbres (Mission Valley / MV-7)	This project will provide for the construction of Camino De La Reina as a four lane major Street between Fashion Valley Road and Via las Cumbres. In association with this project, the intersection of Avenida Del Rio and Fashion Valley Road was assumed to be widened in the eastbound direction to include one dedicated left-turn lane, one thru lane and one dedicated right-turn lane with right-turn overlap phasing and restriped in the westbound direction to include one dedicated left-turn lane and one shared thru / right-turn lane. Development agreements have expired but included as a reasonably planned improvement to access the Levi Cushman site.	Project expected to be completed by 2035. *100% subdivider funding (Levi-Cushman Specific Plan)*
Via Las Cumbres Extension (Mission Valley / MV-13)	This project will construct Via Las Cumbres between Friars Road and Hotel Circle N.	Project expected to be completed by 2035. *100% subdivider funding (Levi-Cushman Specific Plan)*

9.2 Year 2035 Volumes

Year 2035 (Horizon Year) traffic volumes were forecasted for the study area using a SANDAG Series 12 Regional Traffic Model, including all of the improvements detailed above in *Table 9-1*. Extensive efforts between LLG and SANDAG were made to include detailed land use/roadway network information. The traffic volumes represent LLG's best efforts of forecasting Long-Term (2035) conditions with the most recent modeling information available at the time this report was prepared.

Appendix H contains the Year 2035 without project volume plot.

Based on the projected forecast ADT volumes, the Long-Term (2035) peak hour volumes were calculated based on the existing relationship between ADT and peak hour volumes. The forecast

volumes were also checked for consistency between intersections, where no driveways or roadways exist between intersections, and were compared to existing volumes for accuracy.

Figure 9-2 depicts the Year 2035 without Project traffic volumes, while ***Figure 9-3*** depicts the Year 2035 + Project (FTE increase of 3,000 FTE) traffic volumes.

9.3 Year 2035 Analysis

9.3.1 *Intersection Operations*

Table 9-2 summarizes the Year 2035 without Project peak hour intersection operations. In the Year 2035, the following intersections are calculated to operate at LOS E or worse.

1. Sea World Drive / Pacific Highway - LOS F during the PM peak hour
3. Sea World Drive / I-5 NB Ramps – LOS F during the AM and PM peak hours
9. Linda Vista Road / Napa Street - LOS E during the PM peak hour
11. Linda Vista Road / Colusa Street - LOS F during the PM peak hour
13. Linda Vista Road / Alcala Apartments Entrance - LOS F during the PM peak hour
18. Linda Vista Road / Genesee Avenue - LOS E during the AM and LOS F during the PM peak hours
19. Friars Road / Sea World Drive - LOS E during the PM peak hour
25. Friars Road / Avenida de las Tiendas - LOS E during the PM peak hour
27. Friars Road / 163 NB Ramps - LOS F during the PM peak hour

Appendix I contains the Year 2035 peak hour intersection analysis worksheets.

9.3.2 *Segment Operations*

Table 9-3 summarizes the Year 2035 without Project segment operations. The following segments are calculated to operate at LOS E or worse.

- Sea World Drive: Pacific Highway to I-5 Ramps – LOS F
- Morena Boulevard: Tecolote Road to Buenos Avenue - LOS F
- Morena Boulevard: Buenos Avenue to W. Morena Boulevard - LOS F
- Morena Boulevard: W. Morena Boulevard to Napa Street – LOS E
- Morena Boulevard: Linda Vista Road to I-8 Ramps - LOS F
- Friars Road: Napa Street to Colusa Street – LOS E
- Friars Road: Colusa Street to Via Las Cumbres – LOS F
- Friars Road: Avenida de las Tiendas to Ulric Street/SR 163 SB Ramps – LOS F

9.3.3 *Ramp Meter Operations*

Table 9-4 summarizes the 2035 without Project ramp meter operations at the I-5 / Sea World Drive / Tecolote Road NB and SB on-ramps. As seen in *Table 9-4*, the NB on-ramp is calculated to have no

delay during the AM and PM peak hours. The SB on-ramp is calculated to have 40 minutes of delay during the AM peak hour and 112 minutes of delay during the PM peak hour.

It should be noted that the fixed rate analysis approach, which was used in this study to assess ramp meter operations, generally tends to produce unrealistic delays and queue lengths. The results are theoretical, as ramp meter rates are not constant even within the peak hours. In addition, the 2035 analysis uses the same meter rates as used under Existing conditions, which is most likely unrealistic. Furthermore, the fixed rate approach does not take into account driver behavior such as "ramp shopping" or trip diversion. Therefore, the ramp meter delay results reported in *Table 9-4* are overstated, and do not represent expected conditions.

9.3.4 *Freeway Mainline Operations*

Table 9-5 summarizes the Year 2035 without Project freeway operations. As seen in *Table 9-5*, the analyzed I-5 freeway segment is calculated to operate at LOS F(0) in the northbound direction during the AM and PM peak hours. The analyzed I-8 freeway segment is calculated to operate at LOS F(0) in the westbound direction during the AM peak hour and in the eastbound direction during the PM peak hour.

9.4 Year 2035 + Project Analysis

9.4.1 *Intersection Operations*

Table 9-2 summarizes the Year 2035 + Project peak hour intersection operations. The following intersections are calculated to operate at LOS E or worse, with the addition of Project traffic.

1. Sea World Drive / Pacific Highway - LOS F during the PM peak hour
3. Sea World Drive / I-5 NB Ramps – LOS F during the AM and PM peak hours
9. Linda Vista Road / Napa Street - LOS E during the AM and LOS F during the PM peak hours
11. Linda Vista Road / Colusa Street - LOS F during the AM and PM peak hours
13. Linda Vista Road / Alcala Apartments Entrance - LOS F during the AM and PM peak hours
18. Linda Vista Road / Genesee Avenue - LOS E during the AM and LOS F during the PM peak hours
19. Friars Road / Sea World Drive - LOS E during the PM peak hour
25. Friars Road / Avenida de las Tiendas - LOS E during the PM peak hour
27. Friars Road / 163 NB Ramps - LOS F during the PM peak hour

Project related <u>significant cumulative impacts</u> are calculated at the following intersections, based on the City of San Diego significance criteria:

9. Linda Vista Road / Napa Street
11. Linda Vista Road / Colusa Street
13. Linda Vista Road / Alcala Apartments Entrance

Appendix J contains the Year 2035 + Project peak hour intersection analysis worksheets.

9.4.2 *Segment Operations*

Table 9-3 summarizes the Year 2035 + Project segment operations. The following segments are calculated to continue to operate at LOS E or worse with the addition of project traffic.

- Sea World Drive: Pacific Highway to I-5 Ramps – LOS F
- Morena Boulevard: Tecolote Road to Buenos Avenue - LOS F
- Morena Boulevard: Buenos Avenue to W. Morena Boulevard - LOS F
- Morena Boulevard: W. Morena Boulevard to Napa Street – LOS E
- Morena Boulevard: Linda Vista Road to I-8 Ramps - LOS F
- Friars Road: Napa Street to Colusa Street – LOS F
- Friars Road: Colusa Street to Via Las Cumbres – LOS F
- Friars Road: Avenida de las Tiendas to Ulric Street / SR 163 SB Ramps – LOS F

A Project related <u>significant cumulative impact</u> is calculated along the following segment, based on the City of San Diego significance criteria:

- Friars Road: Avenida de las Tiendas to Ulric Street / SR 163 SB Ramps

The City's significance thresholds are exceeded along the four segments of Morena Boulevard listed above and along the segments of Friars Road between Napa Street and Colusa Street and Friars Road between Colusa Street and Via Las Cumbres. However, since the segments are built to their ultimate classification, an alternative analysis was conducted to assess significant impacts.

The analysis determines whether 1) the intersections at the ends of the segment are calculated to operate at an acceptable LOS with the project; and 2) a peak hour Highway Capacity Manual (HCM) arterial analysis for the same segment shows that the segment operates at an acceptable LOS with the project. If both intersections at the end of the segment operate acceptably, and the peak hour HCM arterial analysis for the same segment shows the segment operates acceptably then the project impacts are determined to be less than significant and no mitigation is required.

As noted above, the subject segments along Morena Boulevard and Friars Road are currently built to their ultimate classification. The adjacent intersections are calculated to operate at LOS D or better during the AM and PM peak hours under Year 2035 + Project conditions, as shown in *Table 9-2*. Arterial analysis for the subject segments along Morena Boulevard and Friars Road is provided in ***Table 9-6.*** As shown in *Table 9-6*, the subject segments are calculated to operate at LOS D or better in both directions during the AM and PM peak hours under Year 2035 + Project conditions.

Therefore, since the segments are built to their ultimate classification and both alternative analysis conditions are met, the project impacts are determined to be less than significant and no mitigation is required along these segments.

Appendix J includes the 2035 + Project peak hour arterial analysis worksheets.

9.4.3 *Ramp Meter Operations*

Table 9-4 summarizes the 2035 + Project ramp meter operations at the I-5 / Sea World Drive / Tecolote Road NB and SB on-ramps. As seen in *Table 9-4*, the NB on-ramp is calculated to have no delay during the AM and PM peak hours. The SB on-ramp is calculated to have 41 minutes of delay during the AM peak hour and 115 minutes of delay during the PM peak hour.

Per City of San Diego Significance Criteria, the allowable increase in delay at a ramp meter with more than 15 minutes of delay and freeway LOS E is 2 minutes and at LOS F is 1 minute. With the addition of Project traffic, the SB on-ramp is calculated to have 41 minutes of delay during the AM peak hour and 115 minutes of delay during the PM peak hour, which is considered excessive under City of San Diego guidelines, However, a Project related significant impact is not calculated since the Project adds only one minute of delay during the AM peak hour. During the PM peak hour a Project related significant impact is not calculated since the corresponding freeway mainline segment (I-5 SB between SeaWorld Drive and I-8) is calculated to operate at LOS D with the addition of Project traffic, as shown in *Table 9-5*.

It should be noted that the fixed rate analysis approach, which was used in this study to assess ramp meter operations, generally tends to produce unrealistic delays and queue lengths. The results are theoretical, as ramp meter rates are not constant even within the peak hours. In addition, the 2035 analysis uses the same meter rates as used under Existing conditions, which is most likely unrealistic. Furthermore, the fixed rate approach does not take into account driver behavior such as "ramp shopping" or trip diversion. Therefore, the ramp meter delay results reported in *Table 9-4* are overstated, and do not represent expected conditions.

9.4.4 *Freeway Mainline Operations*

Table 9-5 summarizes the Year 2035 + Project freeway operations. As seen in *Table 9-5*, with the addition of Project traffic, the analyzed I-5 freeway segment is calculated to continue to operate at LOS F(0) in the northbound direction during the AM and PM peak hours. The analyzed I-8 freeway segment is calculated to continue to operate at LOS F(0) in the westbound direction during the AM peak hour and in the eastbound direction during the PM peak hour. Based on the City of San Diego significance criteria, no Project related significant cumulative freeway mainline impacts are calculated.

TABLE 9–2
LONG-TERM INTERSECTION OPERATIONS

Intersection	Control Type	Peak Hour	Long Term		Long Term + Project		Δ Delay [c]	Impact
			Delay [a]	LOS [b]	Delay	LOS		
1. Sea World Dr / Pacific Hwy	Signal	AM	48.8	D	48.8	D	0.0	None
		PM	137.1	F	137.4	F	0.3	None
2. Sea World Dr / I-5 SB Ramps	Signal	AM	46.4	D	49.1	D	2.7	None
		PM	41.2	D	53.2	D	12.0	None
3. Sea World Dr / I-5 NB Ramps	Signal	AM	83.3	F	84.3	F	1.0	None
		PM	168.8	F	169.4	F	0.6	None
4. Tecolote Rd / Morena Blvd	Signal	AM	49.3	D	54.5	D	5.2	None
		PM	49.5	D	54.5	D	5.0	None
5. Buenos Ave / Morena Blvd	Signal	AM	15.7	B	15.8	B	0.1	None
		PM	17.7	B	18.2	B	0.5	None
6. Morena Blvd / W. Morena Blvd	Signal	AM	22.4	C	27.3	C	4.9	None
		PM	27.8	C	41.7	D	13.9	None
7. Napa St / Morena Blvd	Signal	AM	24.8	C	25.4	C	0.6	None
		PM	36.2	C	38.9	D	2.7	None
8. Linda Vista Rd / Morena Blvd	Signal	AM	20.2	C	20.5	C	0.3	None
		PM	21.4	C	23.4	C	2.0	None
9. Linda Vista Rd / Napa St	Signal	AM	51.6	D	**68.9**	**E**	**>10**	**Cumulative**
		PM	**78.7**	**E**	**>100**	**F**	**>10**	**Cumulative**
10. Linda Vista Rd / Marian Way	Signal	AM	38.3	D	53.7	D	15.4	None
		PM	32.6	C	48.2	D	15.6	None
11. Linda Vista Rd / Colusa St	MSSC [d]	AM	31.6	D	**70.1**	**F**	**>10**	**Cumulative**
		PM	**66.9**	**F**	**>300**	**F**	**>10**	**Cumulative**
12. Linda Vista Rd / Alcala Pkwy	Signal	AM	27.1	C	40.8	D	13.7	None
		PM	25.5	C	34.4	C	8.9	None
13. Linda Vista Rd / Alcala Apts Ent	MSSC	AM	28.6	D	**61.6**	**F**	**33.0**	**Cumulative**
		PM	**>200**	**F**	**>300**	**F**	**>10**	**Cumulative**

TABLE 9–2
LONG-TERM INTERSECTION OPERATIONS

Intersection	Control Type	Peak Hour	Long Term		Long Term + Project		Δ Delay [c]	Impact
			Delay [a]	LOS [b]	Delay	LOS		
14. Linda Vista Rd / Via Las Cumbres	Signal	AM	26.9	C	38.0	D	11.1	None
		PM	27.0	C	29.7	C	2.7	None
15. Linda Vista Rd / Kramer St	Signal	AM	17.3	B	18.0	B	0.7	None
		PM	15.7	B	16.5	B	0.8	None
16. Linda Vista Rd / Comstock St	Signal	AM	19.1	B	19.3	B	0.2	None
		PM	24.1	C	24.5	C	0.4	None
17. Linda Vista Rd / Ulric St	Signal	AM	25.6	C	28.3	C	2.7	None
		PM	34.8	C	38.0	D	3.2	None
18. Linda Vista Rd / Genesee Ave	Signal	AM	64.5	E	65.2	E	0.7	None
		PM	82.2	F	82.8	F	0.6	None
19. Friars Rd / Sea World Dr	Signal	AM	26.4	C	27.7	C	1.3	None
		PM	63.1	E	64.7	E	1.6	None
20. Friars Rd / Napa St	Signal	AM	25.8	C	26.9	C	1.1	None
		PM	19.5	B	20.8	C	1.3	None
21. Friars Rd / Colusa St	Signal	AM	39.7	D	49.6	D	9.9	None
		PM	44.2	D	54.0	D	9.8	None
22. Friars Rd / Via Las Cumbres	Signal	AM	30.1	C	32.2	D	2.1	None
		PM	53.5	D	54.0	D	0.5	None
23. Friars Rd / Fashion Valley Rd	Signal	AM	25.6	C	26.4	C	0.8	None
		PM	40.3	D	41.3	D	1.0	None
24. Friars Rd / Via de la Moda	Signal	AM	4.5	A	4.6	A	0.1	None
		PM	26.8	C	26.8	C	0.0	None
25. Friars Rd / Avenida de las Tiendas	Signal	AM	15.7	B	15.8	B	0.1	None
		PM	60.0	E	61.5	E	1.5	None
26. Friars Rd / Ulric St / SR 163 SB Ramps	Signal	AM	45.3	D	45.5	D	0.2	None
		PM	50.9	D	52.8	D	1.9	None

TABLE 9–2
LONG-TERM INTERSECTION OPERATIONS

Intersection	Control Type	Peak Hour	Long Term		Long Term + Project		Δ Delay [c]	Impact
			Delay [a]	LOS [b]	Delay	LOS		
27. Friars Rd / 163 NB Ramps	Signal	AM	49.8	D	51.9	D	2.1	None
		PM	111.7	F	112.1	F	0.4	None

Footnotes:

a. Average intersection delay per vehicle in seconds.
b. Level of Service.
c. Increase in delay due to project traffic.
d. MSSC: Minor-Street-STOP-Controlled intersection. Minor Street left-turn delay and LOS reported.

General Notes:

Bold and shaded indicates potential significant impact.

SIGNALIZED		UNSIGNALIZED	
Delay	LOS	Delay	LOS
0.0 ≤ 10.0	A	0.0 ≤ 10.0	A
10.1 to 20.0	B	10.1 to 15.0	B
20.1 to 35.0	C	15.1 to 25.0	C
35.1 to 55.0	D	25.1 to 35.0	D
55.1 to 80.0	E	35.1 to 50.0	E
≥ 80.1	F	≥ 50.1	F

TABLE 9–3
LONG-TERM SEGMENT OPERATIONS

Street Segment	Functional Classification [a]	LOS E Capacity [b]	Long Term (2035)			Long Term (2035) + Project			Δ V/C [f]	Impact Type
			ADT[c]	LOS [d]	V/C [e]	ADT	LOS	V/C		
Sea World Drive										
Pacific Hwy to I-5 Ramps	5-Lane Major Road	45,000	48,900	F	1.087	49,370	F	1.097	0.010	None
Tecolote Road										
I-5 to Morena Blvd	4-Lane Major Road	40,000	33,600	D	0.840	35,000	D	0.875	0.035	None
Morena Boulevard										
Tecolote Rd to Buenos Ave	2-Lane Collector w/ TWLTL	15,000	19,500	F	1.300	21,170	F	1.411	0.111	None[g]
Buenos Ave to W. Morena Blvd	2-Lane Collector w/ TWLTL	15,000	17,800	F	1.187	19,470	F	1.298	0.111	None[g]
W. Morena Blvd to Napa St	4-Lane Major Road	40,000	35,600	E	0.890	37,660	E	0.942	0.052	None[g]
Napa St to Linda Vista St	4-Lane Major Road	40,000	27,600	C	0.690	27,628	C	0.691	0.001	None
Linda Vista Rd to I-8 Ramps	4-Lane Major Road	40,000	40,400	F	1.010	42,540	F	1.064	0.054	None[g]
Linda Vista Road										
Morena Blvd to Napa St	4-Lane Major	40,000	32,200	D	0.805	34,340	D	0.859	0.054	None
Napa St to Marian Way/Mildred	4-Lane Major	40,000	28,700	C	0.718	33,160	D	0.829	0.0111	None
Marian Way/Mildred to Colusa St	4-Lane Major	40,000	23,100	C	0.578	25,192	C	0.630	0.052	None
Colusa St to Alcala Pkwy	4-Lane Major	40,000	20,600	B	0.515	23,110	C	0.578	0.063	None
Alcala Pkwy to Via Las Cumbres	4-Lane Major	40,000	22,500	C	0.563	26,220	C	0.656	0.093	None
Via Las Cumbres to Kramer St	4-Lane Major	40,000	23,600	C	0.590	25,550	C	0.639	0.049	None
Kramer St to Comstock St	4-Lane Major	40,000	19,800	B	0.495	21,470	C	0.537	0.042	None
Comstock St to Ulric St	4-Lane Major	40,000	23,200	C	0.580	24,690	C	0.617	0.037	None
Ulric St to Genesee Ave	4-Lane Major	40,000	31,800	D	0.795	33,100	D	0.828	0.033	None

CONTINUED ON THE NEXT PAGE

TABLE 9-3
LONG-TERM SEGMENT OPERATIONS

Street Segment	Functional Classification [a]	LOS E Capacity [b]	Long Term (2035)			Long Term (2035) + Project			Δ V/C [f]	Impact Type
			ADT[c]	LOS [d]	V/C [e]	ADT	LOS	V/C		
Friars Road										
Napa St to Colusa St	4-Lane Major Road	40,000	39,500	E	0.988	40,060	F	1.002	0.014	None[g]
Colusa St to Via Las Cumbres	4-Lane Major Road	40,000	42,300	F	1.058	43,140	F	1.079	0.021	None[g]
Via Las Cumbres to Fashion Valley Rd	4-Lane Major Road	40,000	32,500	D	0.813	34,360	D	0.859	0.046	None
Fashion Valley Rd to Via de la Moda	6-Lane Major Road	50,000	28,500	C	0.570	29,800	C	0.596	0.026	None
Via de la Moda to Avenida de las Tiendas	6-Lane Major Road	50,000	37,200	C	0.744	38,456	C	0.769	0.025	None
Avenida de las Tiendas to Avenida del Rio	6-Lane Major/Prime[h]	55,000	**64,800**	**F**	**1.178**	**66,010**	**F**	**1.200**	**0.022**	**Cumulative**
Avenida del Rio to SR 163 SB Ramps	7-Lane Major/Prime[h]	60,000	**64,800**	**F**	**1.080**	**66,010**	**F**	**1.100**	**0.020**	**Cumulative**
Napa Street										
Friars Rd to Linda Vista Rd	4-Lane Major	40,000	21,400	C	0.535	21,680	C	0.542	0.007	None
Linda Vista Rd to Morena Blvd	4-Lane Major	40,000	30,000	C	0.750	32,094	D	0.802	0.051	None
Colusa Street										
Friars Rd to Linda Vista Road	2-Lane Collector	8,000	5,100	D	0.638	6,500	D	0.813	0.175	None
Via Las Cumbres										
Friars Rd to Linda Vista Rd	4-Lane Collector	30,000	16,300	C	0.543	17,510	C	0.584	0.040	None

Footnotes:
a. The current classification at which the roadway functions.
b. The capacity corresponding to the functional classification of the roadway per City of San Diego Classification table.
c. Average Daily Traffic.
d. Level of Service.
e. Volume to capacity ratio.
f. Increase in V/C ratio due to project traffic.
g. Peak hour arterial analysis indicates LOS D or better operations. Therefore, no significant impact is calculated.
h. Modified Major / Prime capacity assumed. Westbound lanes will operate as a Prime (no parking or driveways) and eastbound lanes will operate as a Major due to Avenida Del Rio Driveway.

General Notes:
Bold and shaded indicates potential significant impact.

TABLE 9–4
LONG-TERM RAMP METER OPERATIONS

Location/Condition	Peak Hour	Peak Hour Flow F [a]	Discharge Rate R [b]	Excess Demand E [a]	Delay [c]	Queue [d]	Impact[f]
Sea World Drive to NB I-5 – 2 SOV Lanes							
Year 2035	AM	821	965	0	0	0	-
	PM	919	972	0	0	0	-
Year 2035 + Project	AM	825	965	0	0	0	None
	PM	953	972	0	0	0	None
Sea World Drive to SB I-5 – 1 SOV + 1 HOV Lanes							
Year 2035	AM	530 [e]	318	212	40	5,310	-
	PM	910 [e]	318	592	112	14,809	-
Year 2035 + Project	AM	533 [e]	318	215	41	5,374	None
	PM	929 [e]	318	611	115	15,276	None

Footnotes:

a. Vehicles per hour per lane.

b. Ramp meter discharge rates obtained from Caltrans. Most restrictive rate used when a range of discharge rates are provided.

c. Calculated delay in minutes per lane.

d. Calculated queue length in feet per lane.

e. 15% reduction in volume due to HOV lane.

f. Per City of San Diego Significance Criteria, the allowable increase in delay at a ramp meter with more than 15 minutes of delay and freeway LOS E is 2 minutes and at LOS F is 1 minute. With the addition of Project traffic, the SB on-ramp is calculated to have 41 minutes of delay during the AM peak hour and 115 minutes of delay during the PM peak hour, which is considered excessive under City of San Diego guidelines, However, a Project related significant impact is not calculated since the Project adds only one minute of delay during the AM peak hour. During the PM peak hour a Project related significant impact is not calculated since the corresponding freeway mainline segment (I-5 SB between SeaWorld Drive and I-8) is calculated to operate at LOS D with the addition of Project traffic, as shown in *Table 9-5*.

General Notes:

1. SOV = Single Occupancy Vehicle, HOV = High Occupancy Vehicle

2. It should be noted that the fixed rate analysis approach, which was used in this study to assess ramp meter operations, generally tends to produce unrealistic delays and queue lengths. The results are theoretical, as ramp meter rates are not constant even within the peak hours. In addition, the 2035 analysis uses the same meter rates as used under Existing conditions, which is most likely unrealistic.

TABLE 9–5
LONG-TERM FREEWAY MAINLINE SEGMENT OPERATIONS

Freeway and Segment	Direction, Number of Lanes [a] & Capacity [b]			Year 2035						Year 2035 + Project						Delta [d]		Sig Impact?	
				Peak Hour Volume		V/C [c]		LOS		Peak Hour Volume		V/C		LOS					
				AM	PM	AM	PM	AM	PM	AM	PM	AM	PM	AM	PM	AM	PM	AM	PM
Interstate 5																			
Sea World Dr to I-8	NB	4M + 1A	9,200	9,874	10,219	1.073	1.111	F(0)	F(0)	9,899	10,234	1.076	1.112	F(0)	F(0)	0.003	0.002	No	No
	SB	4M + 2A	10,400	8,873	8,793	0.853	0.845	D	D	8,876	8,815	0.853	0.848	D	D	0.000	0.002	No	No
Interstate 8																			
Morena Blvd to Taylor St	WB	5M	10,000	11,559	6,997	1.156	0.700	F(0)	C	11,589	7,015	1.159	0.701	F(0)	C	0.003	0.002	No	No
	EB	4M + 1A	9,200	5,925	11,087	0.644	1.205	C	F(0)	5,928	11,114	0.644	1.208	C	F(0)	0.000	0.003	No	No

Footnotes:

a. "M" = Mainline, "A" = Auxiliary Lane
b. Capacity = 2,000 vehicles per hour per lane (mainline), 1,200 vehicles per hour per lane (auxiliary).
c. Volume to Capacity ratio.
d. Increase in V/C ratio due to project traffic.

LOS	V/C
A	<0.41
B	0.62
C	0.8
D	0.92
E	1
F(0)	1.25
F(1)	1.35
F(2)	1.45
F(3)	>1.46

TABLE 9–6
LONG-TERM + PROJECT ARTERIAL OPERATIONS

Arterial Segment	Period	Direction	Speed[a]	LOS[b]
Morena Blvd. Tecolote Road to Buenos Avenue	AM	NB	15.5	D
		SB	23.3	C
	PM	NB	14.1	D
		SB	21.2	C
Morena Blvd. Buenos Avenue to West Morena Boulevard	AM	NB	17.5	D
		SB	15.8	D
	PM	NB	17.5	D
		SB	15.5	D
Morena Blvd. West Morena Boulevard to Napa Street	AM	NB	23.3	C
		SB	14.4	D
	PM	NB	25.6	B
		SB	15.2	D
Morena Blvd. Linda Vista Road to I-8	AM	NB	27.2	B
		SB	32.4	A
	PM	NB	28.0	B
		SB	32.4	A
Friars Road Napa Street to Colusa Street	AM	EB	28.8	B
		WB	16.5	D
	PM	EB	17.8	D
		WB	21.6	C
Friars Road Colusa Street to Via Las Cumbres	AM	EB	31.0	B
		WB	18.2	C
	PM	EB	19.9	D
		WB	19.1	C

Footnotes:
a. Speed in miles per hour.
b. Level of Service.

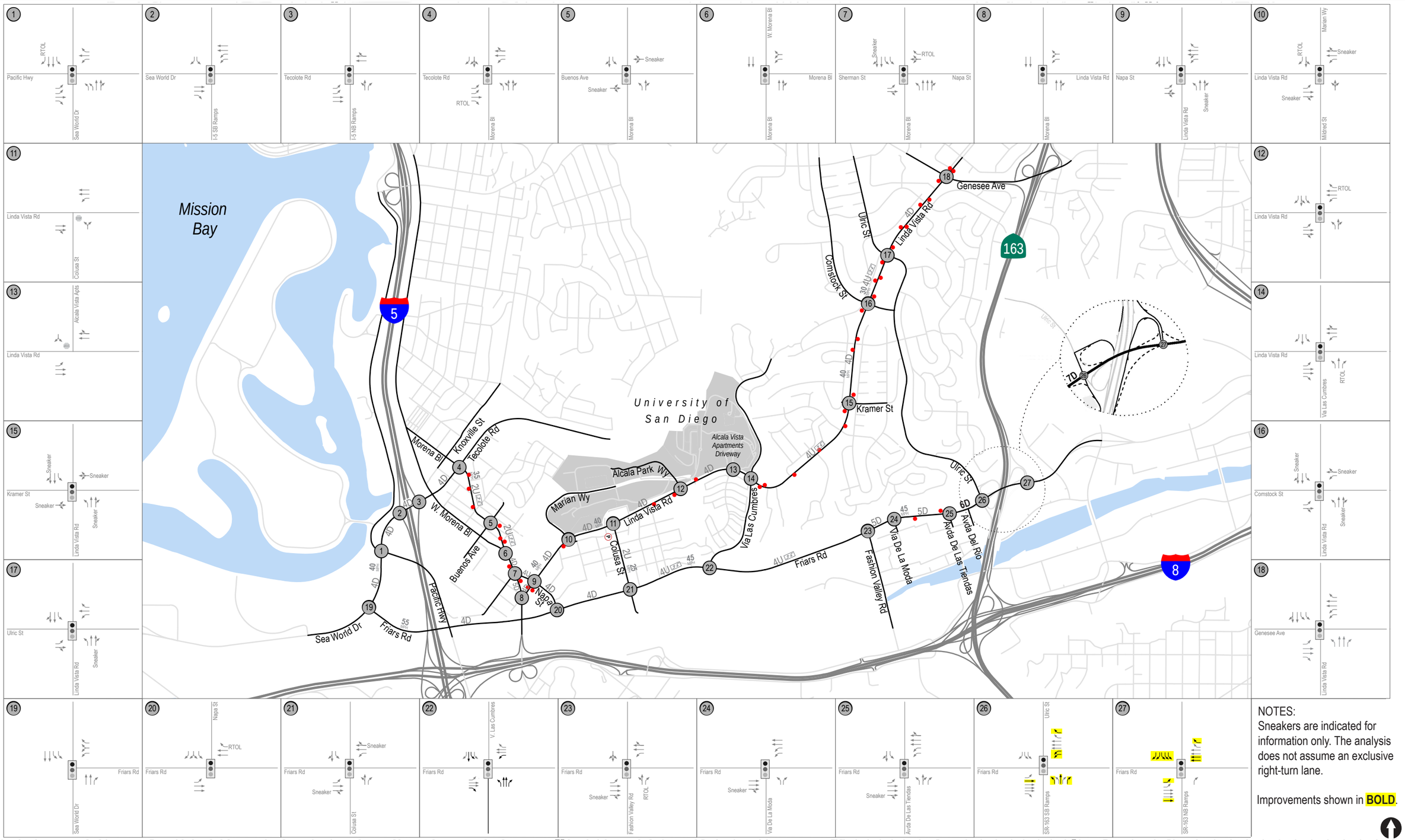

LINSCOTT LAW & GREENSPAN engineers

N:\2341\Figures\June 2016
Date: 06/02/16

Figure 9-1

Year 2035 Network Improvements

USD MASTER PLAN UPDATE

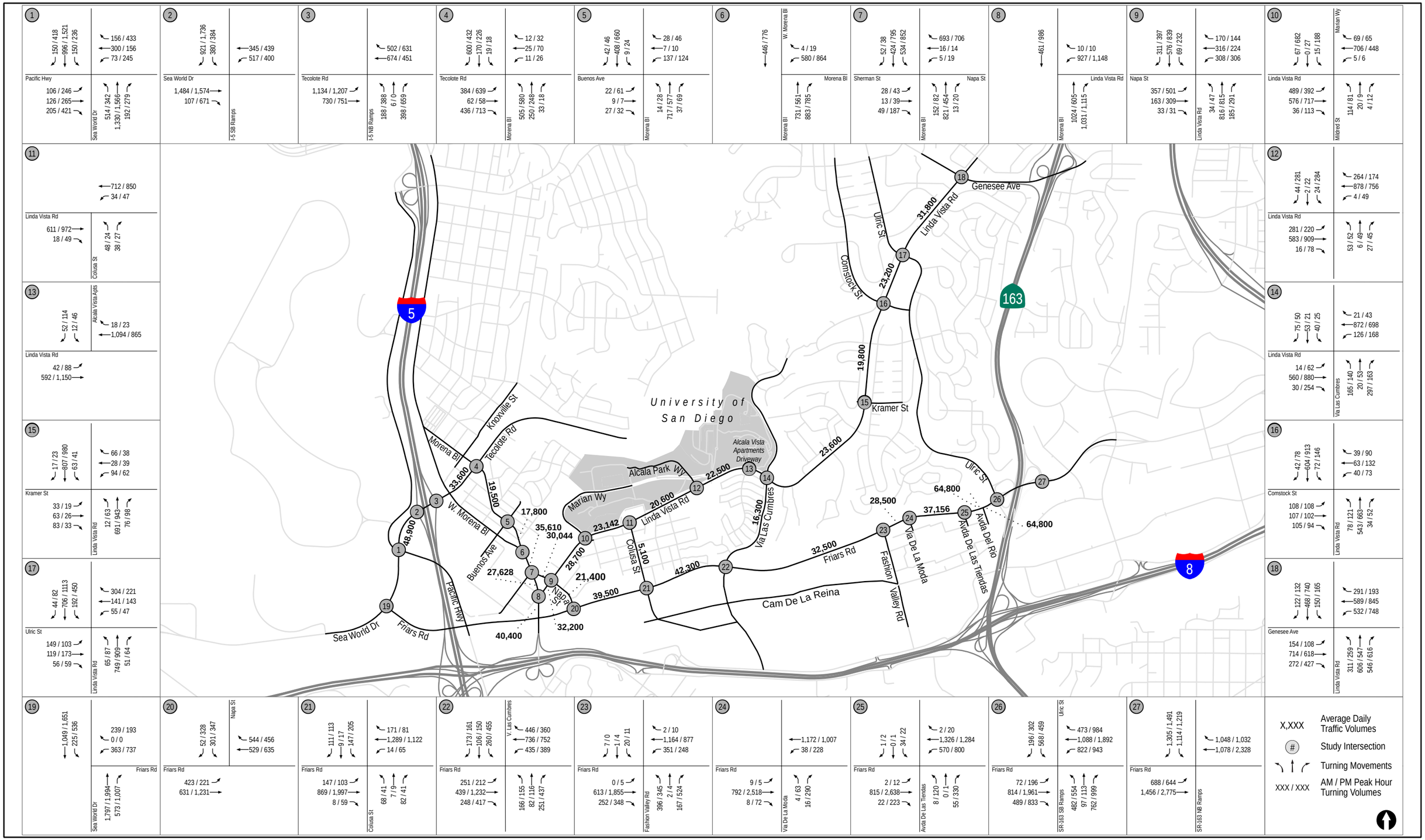

LINSCOTT LAW & GREENSPAN engineers

N:\2341\Figures\June 2016
Date: 06/02/16

Figure 9-2

Year 2035 Without Project Traffic Volumes

USD MASTER PLAN UPDATE

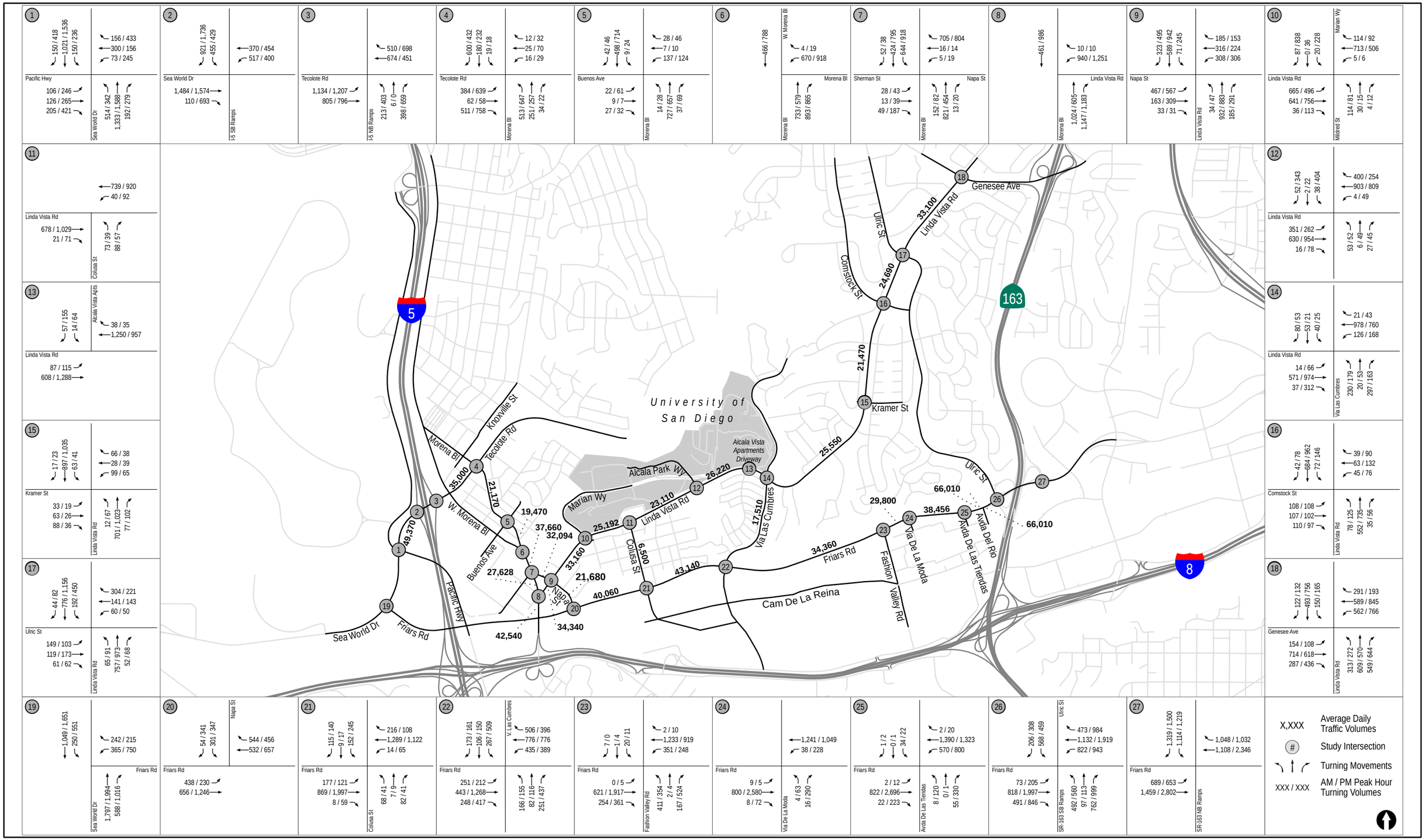

LINSCOTT LAW & GREENSPAN engineers

N:\2341\Figures\June 2016
Date: 06/02/16

Figure 9-3

Year 2035 With Project Traffic Volumes

USD MASTER PLAN UPDATE

10.0 PARKING ASSESSMENT

A parking assessment for the Project was conducted to ensure that an appropriate amount of parking would be provided to accommodate the FTE student increase. An inventory of USD's on-site parking supply and a parking demand study was conducted over a period of two days in October 2014. Based on the parking inventory survey, it was determined that a total of 5,384 parking spaces are currently provided on the USD Campus. ***Figure 10-1*** provides a map showing the Existing parking locations and observed parking supply

Table 10-1 summarizes the existing parking supply and the observed parking demand on Tuesday October 7, 2014 and Wednesday October 8, 2014. The demand study was conducted at 9:30 AM, 11:30 AM, 1:30 PM, and 3:30 PM each day, based on observed peak parking times at similar university locations. As seen in *Table 10-1*, on average the on-site parking is approximately 66.9% occupied. The highest parking demand of 3,776 spaces (70.1% spaces occupied) was observed at 1:30 PM on Wednesday October 8th. A more detailed summary of the data in *Table 10-1* is included in ***Appendix K*** showing a breakdown of the parking supply and demand by location.

USD has a 7,000 FTE student maximum per the existing CUP. Based on this number, the current parking demand (based on the highest observed demand at 1:30 PM on October 8th) is 0.539 parking spaces / FTE.

The Project is anticipated to add approximately 150 additional FTE per year, up to 3,000 additional FTE. Additional parking for the ultimate 3,000 additional FTE will not be needed all at once, but rather, will be tied to the increase in FTE. A summary of the additional parking spaces recommended based on additional FTE is summarized in ***Table 10-2***.

The standard of practice in traffic engineering is to consider a parking area "full" when it reaches 85% of its capacity. Parking occupancy over 85% results in parking conflicts, with available parking spaces being difficult to locate during peak times. Therefore, the additional recommended parking spaces based on FTE, as summarized in *Table 10-2*, accounts for approximately 85% occupancy.

Additional parking spaces above what is already provided by USD are not calculated to be needed until approximately 1,800 additional FTE are enrolled. At the Project's buildout of 3,000 additional FTE, the calculations show that 815 additional parking spaces will be needed, above the currently provided 5,384 spaces, to support the ultimate increase in FTE. Additional information detailing how the parking calculations were conducted is included in *Appendix K*.

It should be noted that this parking assessment does not utilize individual projects (such as new buildings) associated with the USD Master Plan Update to calculate the anticipated parking demand, but rather the overall increase in FTE enrollment. USD will ensure a sufficient parking supply per FTE is provided throughout buildout of the Master Plan, accounting for the occasional temporary decrease in parking supply (if any), including a loss of surface parking, due to construction and the proposed closure of Marian Way.

As individual Master Plan Update improvement projects are constructed, parking may be temporarily displaced. USD will provide off-site or alternative parking as needed per the overall rate of 0.539 spaces per FTE.

TABLE 10–1
USD ON-SITE PARKING OCCUPANCY SURVEY SUMMARY

	Tuesday, October 07, 2014				Wednesday, October 08, 2014				Average
	9:30 AM	11:30 AM	1:30 PM	3:30 PM	9:30 AM	11:30 AM	1:30 PM	3:30 PM	
Total Parking Supply = 5,384Spaces									
Total Spaces Occupied	3,645	3,764	3,575	3,556	3,245	3,639	**3,776**	3,623	**3,603**
% Spaces Occupied	*67.7%*	*69.9%*	*66.4%*	*66.0%*	*60.3%*	*67.6%*	*70.1%*	*67.3%*	***66.9%***

Maximum Full Time Equivalent (FTE) Students per the Existing CUP	7,000
Parking Demand / FTE (based on highest observed demand)	0.539

TABLE 10-2
RECOMMENDED ADDITIONAL PARKING SPACES PER FTE

Increase in FTE	**Recommended Additional Parking Spaces**	**Recommended Total Parking Supply[a]**
750 (Near-Term)	-	5,384
900	-	5,384
1,050	-	5,384
1,200	-	5,384
1,350	-	5,384
1,500	-	5,384
1,650	-	5,384
1,800	71	5,455
1,950	164	5,548
2,100	257	5,641
2,250	350	5,734
2,400	443	5,827
2,550	536	5,920
2,700	629	6,013
2,850	722	6,106
3,000	815	6,199

Footnotes:

a. Based on the observed Existing supply of 5,384 parking spaces. Additional parking spaces are not calculated to be needed until approximately 1,800 additional FTE are enrolled

USD could lower the required parking spaces / FTE ratio, thereby reducing the number of additional parking spaces needed, by implementing various transportation demand management (TDM) measures above and beyond the following programs which are ***currently being implemented***:

- Morning and evening tram service between the USD campus the Old Town Transit Center.
- The San Diego Metropolitan Transit System (MTS) buses, trolleys and coasters provide transportation throughout San Diego County. USD is located on the #44 bus route, and the Old Town Transit Station is located approximately 1.2 miles away. Discounted student MTS passes are available for purchase.
- "Zimride" carpooling services to connect USD students, faculty and staff interested in carpooling.
- "Zip Car" car sharing service. Two Zip Cars are available on campus to be rented by the hour.
- Carpool permits (2 or more people per vehicle) are available to commuter students or faculty / staff free of charge.
- "Fresh Air" parking permits are available to faculty / staff free of charge and allow employees who normally use alternate modes of transportation to commute to work, e.g. ride a bike; take the trolley; carpool; etc.; to park on campus up to 16 times per semester.
- Discounted "Super Shuttle" fares for trips between USD and the San Diego International Airport.

The following additional TDM strategies, in conjunction with the programs listed above may reduce USD's parking space / FTE ratio:

- Increase faculty/staff use of alternatives to driving alone to reduce commuter parking demand, for example by incorporating special parking areas for ride and car sharing programs.
- Improve the efficiency of existing parking with expanded enforcement, shuttle improvements, and the use of technology to direct drivers to available spaces.
- Educate students, faculty and staff about the full menu of transit options. This could be accomplished in a number of ways including the distribution of educational materials, transit tours, and an increased presence on USD's website.
- Improve bicycle and pedestrian experiences. The USD Master Plan Update outlines a variety of strategies to improve the bicycle and pedestrian experience, as discussed further in Section 11 of this study.
- Expand existing Zip Car services and / or provide free memberships to alternative car sharing services, if available.
- Provide free or greatly discounted (above the discount currently provided) transit passes to commuter students, faculty and staff willing to forgo a parking permit.
- Retool the campus parking system to establish fees based on daily use.
- Consider implementing technology to be used in parking structures assisting students in quickly locating parking (parking space vacancy monitoring).

As noted, the TDM strategies listed above may reduce USD's parking space / FTE ratio. Similarly, they may also reduce the number of vehicular trips generated by the campus. However, the results of this study, including the level of service analysis at the study area roadway facilities, and the recommended parking supply associated with additional FTE, do not take into account a TDM related reduction in traffic or parking demand.

While a TDM credit was not assumed in the calculation of project trips or in the corresponding results of the analysis presented in this study, USD has agreed to internally monitor the effectiveness of their TDM strategies. Results of USD's TDM efforts will be forwarded annually to the City Engineer for a period of seven years (between June and August) beginning one year after approval of the Conditional Use Permit.

LINSCOTT LAW & GREENSPAN engineers

N:\2341\Figures
Date: 02/03/15

Figure 10–1

Existing Parking Supply

USD MASTERPLAN

11.0 ALTERNATIVE TRANSPORTATION ASSESSMENT

The following section discusses the existing and proposed multi-modal components associated with the USD campus.

11.1 Pedestrians

The USD campus is relatively compact, allowing students, faculty, staff, and visitors to reach most of the mesa within a 5-10 minute walk from the center of campus at Colachis Plaza. Courtyards and arcades provide a pleasant pedestrian environment and enhance pedestrian circulation between buildings.

Existing pedestrian circulation on the mesa is mostly along Marian Way. Sidewalks along Marian Way are narrow and pedestrian congestion can he high between classes because there are no alternative routes. Routes to the residential and recreation district east of the mesa are indirect and can require traversing slopes, parking lots, and stairways.

The USD Master Plan Update proposes to improve the pedestrian experience and provide increased walkability with the following strategies:

- Establish the academic core as a Pedestrian Priority Zone to make the pedestrian experience safer and more pleasant.
- Make Marian Way and Torero Way (from Copley Library to the Student Life Pavilion) a Pedestrian Zone (i.e. prohibit vehicular and bicycle traffic).
- Shift vehicular and bicycle circulation to the periphery of campus.
- Manage congestion points and access points with clearly marked crossings, enhanced paving, and building design that acknowledges these areas as significant gateways and activity nodes on campus.
- Engage the edges of campus with trails, paths, stairs, and connecting walkways.
- Enhance three cross-axial pedestrian connections that anchor the campus to its edges and context:
    - College Connection: From Shiley Center for Science and Technology to the Facilities Management complex, framed by new buildings for the College of Arts and Sciences and School of Business Administration.
    - Open Space Connection: From the Josephine Street site to The Immaculata and a canyon overlook, crossing a new Academic Quad at the center of campus.
    - Student Life Connection: From the University Terrace Apartments to a new Academic and Student Support Space, the Colachis Plaza and the Student Life Pavilion.
- Connect the residential village at the Mission with the Student Life Pavilion and Hahn University Center through a new Wellness and Recreation Center that bridges across the topography and links academic, recreation, and student life in one building complex.

A figure from the Master Plan Update illustrating the proposed pedestrian circulation is provided in ***Appendix Q.***

11.2 Bicycles

With the Master Plan Update, USD has the opportunity to enhance bicycle travel and to create a beneficial transportation alternative for students. While the surrounding roadways, including Linda Vista Road, Friars Road, and portions of Morena Boulevard, provide bike lanes, there is little existing bicycle infrastructure on campus in the way of bike lanes and bike storage.

The USD Master Plan Update proposes to improve on-campus bicycle facilities with the following strategies:

- Shift vehicular and bicycle circulation to the periphery of campus, with expansion and improvement of the right-of-way to accommodate multiple modes of circulation
- Create safe conditions for bicycle and vehicular traffic on the proposed loop road by providing two 5' bike lanes.
- Place bicycle parking areas near the proposed loop road. This decreases the amount of bike traffic throughout the center of campus, as students are able to park near the main route and walk to class.
- Utilize the required fire-lane routes as day-to-day bike slow zones. This allows the campus to meet its requirement for fire access but maintain a higher campus aesthetic through a combination of uses and a higher quality of material choice.
- By restriping existing residential roads, the proposed loop road bike lanes can be connected to the residential areas of campus. While there is not enough space for a formalized bike lane along residential roads, slowing traffic and including signage and sharrow striping will allow for a complete bicycle network on campus.
- The option of bike-share is a possible solution to not only allowing more student access to bikes, but it would promote a more active campus lifestyle. Four bike-share locations are proposed in order to allow students living on campus as well as visitors immediate access to the system.
- Bike racks will be located in convenient locations throughout the campus. Larger bike corrals may be dedicated to the residential areas of campus.

A figure from the Master Plan Update illustrating the proposed bicycle circulation is provided in *Appendix Q*.

11.3 Transit

USD currently has a robust transit system in place. The USD Campus is located along a bus route and within one-half mile of the Morena / Linda Vista trolley station. The San Diego Metropolitan Transit System Route 44 serves Linda Vista Road and the USD campus. Several transit stops are located along Linda Vista Road, near the Mildred Street, Colusa Street, Brunner Street, Goshen Street intersections, and the Alcala Apartment Entrance. Route 44 runs between Old Town and Clairemont. The Green Trolley Line and Bus Route 105 provide transit service near the campus. The Green Trolley Line provides service between Old Town and Santee. Bus Route 105 provides service along Morena Boulevard between the Westfield UTC Shopping Mall and Old Town.

In addition to the above described MTS services, USD provides the following free shuttle services for the use of students and staff that commute to and from USD. This includes off-campus services and on-campus shuttle services for easy movement from one part of the Campus to another. Based on information collected by USD, these shuttles currently serve a total of approximately 160,000 trips from students each semester.

Off-Campus Shuttle Service

Currently, a free off-campus shuttle service is available from Old Town to the USD Campus at 30 minute intervals between 6:45 AM and 10:15 AM in the morning and between 3:00 PM through 8:00 PM in the evening. This provides shuttle service for students, faculty and staff using the trolley to commute to USD. Stops along this route include the Old Town Transit Center, the West Parking Structure, Marian Way Uphill, Olin Hall Eastbound, Immaculata / Colachis Plaza, Copley Library, Marian Way Downhill, and Mother Rose Hill Hall.

On-Campus Services

In addition to the above off-campus shuttle service, the following three free on-campus shuttle services are available every 7-12 minutes during the week and every 15-20 minutes on the weekend from 6:30 AM to 12:00AM:

The **Torero Express** serves the Manchester Village Apartments and the Alcala Vista Apartments. This loop is designed to transport resident students to the center of campus. Stops along this route include the Law School Circle, Jenny Craig Pavilion, Manchester Village and the Alcala Vista Apartments.

The **Mission Loop** serves only the east half of campus with stops at the Law School Circle, Mission Crossroads, Manchester Village, and the Alcala Vista Apartments.

The **Barcelona Express** serves only the west half of campus with stops at the West Parking Structure, Marian Way Uphill, Olin Hall Eastbound, Immaculate/Colachis Plaza, Copley Library and Marian Way Downhill.

The USD Master Plan Update proposes to improve transit services with the following strategies:

- Consider expanding the tram service in the future to meet student demand, including adding new tram stops to accommodate future growth and for added convenience.
- Provide enhanced tram signage at all existing and proposed tram stops.
- Consider new smart phone apps that can provide up to the minute information on the tram's actual location.
- Incorporate custom designed shelters or tram stops to provide seating for all users and ample covered space for wheelchairs and strollers.

11.4 TDM Measures

USD already implements a number of transportation demand management (TDM) programs to help reduce the number of vehicular trips generated by the site, as summarized below:

- Morning and evening tram service between the USD campus the Old Town Transit Center.

- The San Diego Metropolitan Transit System (MTS) buses, trolleys and coasters provide transportation throughout San Diego County. USD is located on the #44 bus route, and the Old Town Transit Station is located approximately 1.2 miles away. Discounted student MTS passes are available for purchase.
- "Zimride" carpooling services to connect USD students, faculty and staff interested in carpooling.
- "Zip Car" car sharing service. Two Zip Cars are available on campus to be rented by the hour.
- Carpool permits (2 or more people per vehicle) are available to commuter students or faculty / staff free of charge.
- "Fresh Air" parking permits are available to faculty / staff free of charge and allow employees who normally use alternate modes of transportation to commute to work, e.g. ride a bike; take the trolley; carpool; etc.; to park on campus up to 16 times per semester.
- Discounted "Super Shuttle" fares for trips between USD and the San Diego International Airport.

The following additional TDM strategies, in conjunction with the programs listed above, may further reduce the number of vehicle trips to and from campus:

- Increase faculty/staff use of alternatives to driving alone to reduce commuter parking demand, for example by incorporating special parking areas for ride and car sharing programs.
- Improve the efficiency of existing parking with expanded enforcement, shuttle improvements, and the use of technology to direct drivers to available spaces.
- Educate students, faculty and staff about the full menu of transit options. This could be accomplished in a number of ways including the distribution of educational materials, transit tours, and an increased presence on USD's website.
- Improve bicycle and pedestrian experiences. The USD Master Plan Update outlines a variety of strategies to improve the bicycle and pedestrian experience, as discussed above.
- Expand existing Zip Car services and / or provide free memberships to alternative car sharing services, if available
- Provide free or greatly discounted (above the discount currently provided) transit passes to commuter students, faculty and staff willing to forgo a parking permit.
- Retool the campus parking system to establish fees based on daily use.
- Consider implementing technology to be used in parking structures assisting students in quickly locating parking (parking space vacancy monitoring).

The TDM strategies listed above may reduce USD's parking space / FTE ratio. Similarly, they may also reduce the number of vehicular trips generated by the campus. However, the results of this study, including the level of service analysis at the study area roadway facilities, and the recommended parking supply associated with additional FTE, do not take into account a TDM related reduction in traffic or parking demand.

While a TDM credit was not assumed in the calculation of project trips or in the corresponding results of the analysis presented in this study, USD has agreed to internally monitor the effectiveness of their TDM strategies. Results of USD's TDM efforts will be forwarded annually to the City Engineer for a period of seven years (between June and August) beginning one year after approval of the Conditional Use Permit.

12.0 SIGNIFICANCE OF IMPACTS AND MITIGATION MEASURES

Per the City of San Diego's significance thresholds and the analysis methodologies presented in this report, Project-related and cumulative traffic are calculated to cause significant impacts within the study area under the direct and cumulative conditions. The following section lists the significant impacts and provides recommendations for mitigation measures to address operating deficiencies.

12.1 Significant Impacts Prior to Mitigation

12.1.1 *Direct Impacts*

Based on the City of San Diego's significance thresholds, the following significant direct impacts are calculated. ***Figure 12–1*** shows graphically the significant direct impacts occurring under Near-Term + Project conditions.

INTERSECTIONS:

DI-1. Linda Vista Road / Napa Street (Intersection #9)

DI-2. Linda Vista Road / Colusa Street (Intersection #11)

DI-3. Linda Vista Road / Alcala Apartments Entrance (Intersection #13)

SEGMENTS:

DI-4. Linda Vista Road: Napa Street to Marian Way/Mildred Street.

12.1.2 *Cumulative Impacts*

Based on the City of San Diego's significance thresholds, the following significant cumulative impacts are calculated. ***Figure 12–2*** shows graphically the significant cumulative impacts and recommended mitigation measures occurring under Long-Term (Year 2035) + Project conditions.

INTERSECTION:

CI-1. Linda Vista Road / Napa Street (Intersection #9)

CI-2. Linda Vista Road / Colusa Street (Intersection #11)

CI-3. Linda Vista Road / Alcala Apartments Entrance (Intersection #13)

SEGMENTS:

CI-4. Friars Road: Avenida de las Tiendas to Ulric Street/SR 163 SB Ramps

12.2 Mitigation Measures

12.2.1 *Direct Impacts*

Under Near-Term conditions the project is calculated to have significant direct impacts at three (3) study intersections and one (1) street segment. As explained in Section 2.3, Project impacts are based on proposed increases to FTE. Although this study bases ADT on FTE, it is unknown whether an increase

in FTE will create the ADT increase that is assumed. It is recommended, therefore, that USD implement a mitigation monitoring program, as outlined in ***Appendix T***, to monitor conditions at the impacted intersection of Linda Vista Road / Alcala Apartments Entrance. The mitigation monitoring program will serve to confirm that the traffic signal warrants and LOS operations that serve as the basis for the recommended mitigation measure are actually met based on the traffic volumes at that time, prior to the mitigation measure being implemented. The mitigation monitoring program will be conducted with each applicable increase in FTE until the need for mitigation is triggered, or until the FTE increase reaches 3,000 FTE.

The following summarizes the recommended mitigation measures. *Figure 12–1* shows the proposed mitigation measures for the impacted intersections and street segment graphically.

Table 12–1 reports the results of the post-mitigation intersection analysis under Near-Term conditions. ***Appendix L*** contains the post-mitigation intersection analysis worksheets.

No mitigation measures are feasible for the impacted segment, as discussed further below, and therefore, no post-mitigation segment analysis is provided.

INTERSECTION:

DI-1. Linda Vista Road / Napa Street

The intersection of Linda Vista Road and Napa Street is located within the Morena Corridor Specific Plan area, which is planned to experience substantial mobility related improvements in the coming years. However, planning for future improvements is still in the preliminary stages. Multiple improvement opportunities at this intersection have been identified, as discussed further below, however none are definitive at this time.

- The *Linda Vista Community Plan*, adopted by the City Council on December 1, 1998, proposes improving the intersection of Linda Vista Road at Napa Street by widening Linda Vista Road to provide an exclusive right-turn lane for southbound traffic, and widening Napa Street west of Linda Vista Road to provide one eastbound left-turn lane, one optional left-turn or through-lane, one eastbound through lane, two westbound through lanes, and bike lanes but no parking allowed. As of the date of this study, only the improvements to the east leg of Napa Street have been constructed (and accounted for in baseline conditions).

- The *Linda Vista Public Facilities Financing Plan* was adopted by the City Council on April 19, 2004 and amended May 2006. Project *T7* of the Plan (page 36) proposes the construction of a roundabout at the intersection. Based on discussions with City Planning Department staff, this improvement is no longer being considered at this time.

- The City of San Diego conducted the *Morena Boulevard Station Area Planning Study* in 2013-2014 that evaluated and provided recommendations for the areas

adjacent to the Mid-Coast trolley stations at Tecolote Road and Clairemont Drive within the Clairemont Mesa and Linda Vista community planning areas, including Mid-Term and Long-Term improvements at the intersection of Linda Vista Road and Napa Street, which involve considerable reconfiguration of the street system in this area. Excerpts from the study detailing the proposed improvements to the intersection are included in ***Appendix M***.

- The forthcoming *Morena Corridor Specific Plan* will build upon the technical analysis and recommendations included in the *Morena Boulevard Station Area Planning Study*. The Morena Corridor Specific Plan is still in its preliminary planning stages, with continued community engagement to determine the appropriate mobility network. Recommendations made in the *Morena Boulevard Station Area Planning Study* will be considered when developing the *Morena Corridor Specific Plan* mobility network, but other alternatives are also being developed and considered. A draft document is expected to be completed in 2016, with the approval process beginning in the spring of 2017.

Since no feasible immediate mitigation measures have been identified, and it is not yet known what improvements may be implemented at the intersection in the future, with multiple documents proposing inconsistent improvements and the forthcoming *Morena Corridor Specific Plan*, the impact is considered significant and unmitigated under CEQA guidelines.

However, USD has agreed to contribute an amount of $297,000 towards future improvements to area, to be made in five equal payments over five years. The contribution amount is based on the Project's estimated 6.6% fairshare of the total cost of the "East Morena Roadway Extension Project" presented in the *Morena Boulevard Station Area Planning Study*, which proposes a new extension of Morena at Cushman to Linda Vista Road, which would bypass the intersection of Linda Vista Road / Napa Street, thereby alleviating a portion of the traffic travelling through the intersection, and providing a more direct route to the freeway, thereby partially mitigating the Project's impact. The total cost of the improvement project is estimated at approximately $4,500,000 based on information contained in the *Morena Boulevard Station Area Planning Study*. Additional information on this improvement project is provided in *Appendix M*, and the Project's fairshare calculation is discussed below.

Based on the Series 12 Year 2035 SANDAG model conducted for the *Morena Boulevard Station Area Planning Study* (included in *Appendix M*), 14,400 ADT is expected to travel along the new East Morena Roadway. Based on the Project's trip distribution percentages that were used in this analysis, and shown on *Figure 3-1*, it is estimated that 11% of USD's Project traffic, or 1,023 ADT of the Project's 9,300 total ADT, would travel along the new roadway under Year 2035 conditions. With this data, the City's fairshare formula (Fairshare % = Project Traffic / ((Buildout + Project

Traffic) –Existing Traffic)) was used to calculate the Project's fairshare contribution of 6.6% (1,023 / ((1,023+14,400) -0) = 6.6%) or $297,000.

As noted above, it is not yet known what improvements will be implemented in the future. The East Morena Roadway Extension Project presented in the *Morena Boulevard Station Area Planning Study* is only a theoretical improvement at this time and may be superseded with improvements presented in the forthcoming *Morena Corridor Specific Plan*. The East Morena Roadway Extension Project is referenced in this study as a mechanism for calculating USD's fairshare contribution towards future improvements to the area based on the expected Project impact. Payment of this contribution will partially mitigate the Project's significant impact to the intersection of Linda Vista Road / Napa Street.

DI-2. Linda Vista Road / Colusa Street

Signalize the intersection to mitigate the Project's direct impact. Signal warrant calculations are provided in ***Appendix N***. It is also recommended, but not required from a level of service standpoint, to eliminate parking (approximately six spaces) along the east curb of Colusa Street to stripe a dedicated 150-foot northbound left-turn lane and a dedicated northbound right-turn lane at Linda Vista Road, such that right turning drivers do not need to wait behind left turning vehicles.

The provision of the dedicated northbound right-turn and left-turn lanes are not required to mitigate the significant impact, as shown in *Table 12-1*. They are only recommended to improve overall intersection operations.

A conceptual sketch of the proposed improvement is provided in ***Appendix O***.

DI-3. Linda Vista Road / Alcala Apartments Entrance

One of two mitigation measures should be implemented once warranted by the mitigation monitoring program:

Option 1: If the monitoring program identifies a significant impact <u>and</u> if the peak hour signal warrant shows that the warrant is met, the Project should signalize the intersection, provide a dedicated southbound left turn lane and a dedicated southbound right turn lane, and coordinate the signal with the downstream signal at Via las Cumbres to the east.

The intersection is approximately 500' from the adjacent signalized intersection of Linda Vista Road / Via Las Cumbres to the east. Since the intersection is a "T-intersection" and does not have a west-bound left turn movement, there are not back-to-back left turn lanes along the segment of Linda Vista Road between the two intersections. Given that the east bound left turn lane onto Via Las Cumbres from Linda Vista Road is approximately 105 feet long, there is sufficient distance between the two

intersections for the proposed mitigation measure to be feasible. A conceptual sketch of the proposed improvement is provided in *Appendix O*.

Option 2: If the mitigation monitoring program identifies a significant impact, but signal warrants are not met, an alternative mitigation measure restricting left-turns out of the Alcala Apartments Entrance by constructing a raised median within Linda Vista Road will be implemented. Left-turns in would continue to be allowed. A conceptual sketch of the proposed alternative improvement is provided in *Appendix O*.

With the implementation of Option 2, left-turning vehicles at this intersection would likely turn left out the adjacent signalized intersection of Linda Vista Road / Alcala Parkway instead. With the addition of these trips, the intersection of Linda Vista Road / Alcala Parkway is calculated to continue to operate acceptably at LOS D or better under Near-Term and Long-Term conditions. *Appendix L* contains the post-mitigation analysis worksheets for the Linda Vista Road / Alcala Parkway intersection.

SEGMENTS:

DI-4. Linda Vista Road: Napa Street to Marian Way (Mildred Street)

The significant impact along this segment of Linda Vista Road could be mitigated with the installation of a raised median to provide 4-Lane Major Road operations. However, there are currently twelve (12) driveways along this segment that would have access restricted with the installation of a raised median. Furthermore, U-turns are not allowed at the adjacent intersections of Napa Street and Marian Way at Linda Vista Road due to the existing width of the roadway and the presence of right-turn overlap signal phasing, further restricting access to the existing driveways. Therefore, this improvement is considered infeasible.

The segment of Linda Vista Road between Napa Street and Marian Way is located within the Morena Corridor Specific Plan area, which is planned to experience substantial mobility related improvements in the coming years. However, planning for these improvements is in the preliminary stages.

The *Morena Boulevard Station Area Planning Study* proposes a new collector road, referred to as "East Morena" connecting the proposed Cushman Avenue and Linda Vista Road. This roadway, if constructed, will intersect with Linda Vista Road between Napa Street and Marian Way. Excerpts from the study showing the proposed roadway are included in *Appendix M*.

The forthcoming *Morena Corridor Specific Plan* will build upon the technical analysis and recommendations included in the *Morena Boulevard Station Area Planning Study*. The Morena Corridor Specific Plan is still in its preliminary planning stages, with continued community engagement to determine the appropriate mobility network. Recommendations made in the *Morena Boulevard Station Area Planning Study* will be considered when developing the *Morena Corridor Specific Plan* mobility network, but

other alternatives are also being developed and considered. A draft document is expected to be completed in 2016.

Since no feasible immediate mitigation measures have been identified, and it is not yet known what improvements may be implemented along the segment with the forthcoming *Morena Corridor Specific Plan*, the impact is considered significant and unmitigated under CEQA guidelines.

However, as noted above for impact DI-1, USD has agreed to contribute an amount of $297,000 towards future improvements to the area, to be made in five equal payments over five years. The 6.6% fairshare contribution amount is based on the Project's estimated fairshare of the total cost of the "East Morena Roadway Extension Project" presented in the *Morena Boulevard Station Area Planning Study*, which proposes a new extension of Morena at Cushman to Linda Vista Road. This new connection would alleviate a portion of the traffic traveling along the impacted segment of Linda Vista Road and provide a more direct route to the freeway, thereby partially mitigating the Project's impact. The total cost of the improvement project is estimated at approximately $4,500,000 based on information contained in the *Morena Boulevard Station Area Planning Study*. Additional information on this improvement project is provided in *Appendix M*, and the Project's fairshare calculation is discussed below.

Based on the Series 12 Year 2035 SANDAG model conducted for the *Morena Boulevard Station Area Planning Study* (included in *Appendix M*), 14,400 ADT is expected to travel along the new East Morena Roadway. Based on the Project's trip distribution percentages that were used in this analysis, and shown on *Figure 3-1*, it is estimated that 11% of USD's Project traffic, or 1,023 ADT of the Project's 9,300 total ADT, would travel along the new roadway under Year 2035 conditions. With this data, the City's fairshare formula (Fairshare % = Project Traffic / ((Buildout + Project Traffic) –Existing Traffic)) was used to calculate the Project's fairshare contribution of 6.6% (1,023 / ((1,023+14,400) -0) = 6.6%) or $297,000.

As noted above, it is not yet known what improvements will be implemented in the future. The East Morena Roadway Extension Project presented in the *Morena Boulevard Station Area Planning Study* is only a theoretical improvement at this time and may be superseded with improvements presented in the forthcoming *Morena Corridor Specific Plan*. The East Morena Roadway Extension Project is referenced in this study as a mechanism for calculating USD's fairshare contribution towards future improvements to the area based on the expected Project impact. Payment of this contribution will partially mitigate the Project's significant impact to the segment of Linda Vista Road between Marian Way and Napa Street and to the intersection of Linda Vista Road / Napa Street (as discussed above for impact DI-1).

TABLE 12–1
NEAR-TERM INTERSECTION MITIGATION ANALYSIS

Intersection	Control Type	Peak Hour	Near-Term		Near-Term + Project		Near-Term + Project + Mitigation			Mitigation
			Delay[a]	LOS[b]	Delay	LOS	Delay	LOS	Δ[c]	
11. Linda Vista Road / Colusa Street	OWSC / Signal [d]	PM	40.1	E	50.9	F	5.2	A	(34.9)	***Option A**: Signalize the intersection only.*
		PM	40.1	E	50.9	F	4.7	A	(35.4)	***Option B**: Signalize the intersection and eliminate parking along the east curb of Colusa Street to provide a dedicated 150-foot northbound left-turn lane and a dedicated northbound right-turn lane at Linda Vista Road.*
13. Linda Vista Road / Alcala Apts. Entrance	OWSC / Signal [e]	PM	29.6	D	38.5	E	6.0	A	(23.6)	***Option A:** If warranted by the mitigation monitoring program, signalize the intersection and provide a dedicated southbound left turn lane and a dedicated southbound right turn lane. Coordinate the signal with the downstream signal at Via las Cumbres to the east.*
		PM	29.6	D	38.5	E	12.5	B	(17.1)	***Option B:** If warranted by the mitigation monitoring program, restrict left-turns out of the Alcala Apartments Entrance by constructing a raised median within Linda Vista Road.*

Footnotes:

a. Average delay expressed in seconds per vehicle.
b. Level of Service.
c. Δ denotes a decrease in delay as compared to Near-Term conditions with the addition of Project trips and proposed mitigation measures.
d. OWSC – One-way Stop Control. The mitigation measure proposes to signalize the intersection.
e. OWSC – One-way Stop Control. The mitigation measure proposes to signalize the intersection OR restrict left-turns out of Alcala Apartments Entrance.

SIGNALIZED		UNSIGNALIZED	
Delay	LOS	Delay	LOS
0.0 ≤ 10.0	A	0.0 ≤ 10.0	A
10.1 to 20.0	B	10.1 to 15.0	B
20.1 to 35.0	C	15.1 to 25.0	C
35.1 to 55.0	D	25.1 to 35.0	D
55.1 to 80.0	E	35.1 to 50.0	E
≥ 80.1	F	≥ 50.1	F

\

12.2.2 *Cumulative Impacts*

Under Long-Term (Year 2035) conditions the project is calculated to have significant cumulative impacts at three (3) study intersections and one (1) street segment. The following summarizes the recommended mitigation measures. *Figure 12–2* shows the proposed mitigation measures for the impacted intersections and street segments graphically.

Table 12–2 reports the results of the post-mitigation intersection analysis under Long-Term (Year 2035) conditions. *Appendix L* contains the post-mitigation intersection analysis worksheets.

No mitigation measures are feasible for the impacted segment, as discussed further below, and therefore, no post-mitigation segment analysis is provided.

INTERSECTION:

CI-1. Linda Vista Road / Napa Street

As summarized above for impact DI-I, the impact is considered significant and unmitigated under CEQA guidelines, since it is unclear what improvements may be implemented at the intersection, with several documents proposing inconsistent improvements and the forthcoming *Morena Corridor Specific Plan*. However, as noted above for impact DI-1, USD has agreed to contribute an amount of $297,000 towards future improvements to the area (6.6% fairshare contribution). Payment of this contribution will partially mitigate the Project's significant impact.

CI-2. Linda Vista Road / Colusa Street

Mitigation measure DI-2, summarized in Section 12.2.1, would mitigate the Project's cumulative impact.

CI-3. Linda Vista Road / Alcala Apartments Entrance

Mitigation measure DI-3, summarized in Section 12.2.1, would mitigate the Project's cumulative impact.

SEGMENTS:

CI-4. Friars Road: Avenida de las Tiendas to Ulric Street / SR 163 SB Ramps

The Long-Term (2035) scenario assumes the fully funded Phase I of the SR 163 / Friar's Road Interchange Project, which includes improvements to this impacted segment. The timing and scope of Phases II and III of the Interchange Project are yet to be determined, contingent on funding, and will likely not include further improvements to this segment. Since there are no improvement projects towards which the Project can contribute a fairshare, this impact is considered significant and unmitigated.

TABLE 12–2
LONG-TERM INTERSECTION MITIGATION ANALYSIS

Intersection	Control Type	Peak Hour	Long-Term		Long-Term + Project		Long-Term + Project + Mitigation			Mitigation
			Delay[a]	LOS[b]	Delay	LOS	Delay	LOS	Δ[c]	
11. Linda Vista Road / Colusa Street	OWSC / Signal [e]	AM	31.6	D	70.1	F	7.4	A	(24.2)	***Option A**: Signalize the intersection only.*
		PM	66.9	F	>300	F	7.8	A	(59.1)	
		AM	31.6	D	70.1	F	6.2	A	(25.4)	***Option B**: Signalize the intersection and eliminate parking along the east curb of Colusa Street to provide a dedicated 150-foot northbound left-turn lane and a dedicated northbound right-turn lane at Linda Vista Road.*
		PM	66.9	F	>300	F	6.7	A	(60.2)	
13. Linda Vista Road / Alcala Apts. Entrance	OWSC / Signal [f]	AM	28.6	D	61.6	F	7.9	A	(20.7)	***Option A:** If warranted by the mitigation monitoring program, signalize the intersection and provide a dedicated southbound left turn lane and a dedicated southbound right turn lane. Coordinate the signal with the downstream signal at Via las Cumbres to the east.*
		PM	209.1	F	791.1	F	12.2	A	(196.9)	
		AM	28.6	D	61.6	F	17.3	C	(11.3)	***Option B:** If warranted by the mitigation monitoring program, restrict left-turns out of the Alcala Apartments Entrance by constructing a raised median within Linda Vista Road.*
		PM	209.1	F	791.1	F	17.5	C	(191.6)	

Footnotes:

a. Average delay expressed in seconds per vehicle.
b. Level of Service.
c. Δ denotes a decrease in delay with the addition of Project trips and proposed mitigation measures as compared to Long-Term conditions.
d. Even though the level of service with mitigation is LOS E / F, the delay is lower than without the Project and mitigation. Therefore, the improvement fully mitigates the significant impact.
e. OWSC – One-way Stop Control. The mitigation measure proposes to signalize the intersection.
f. OWSC – One-way Stop Control. The mitigation measure proposes to signalize the intersection OR restrict left-turns out of Alcala Apartments Entrance.

SIGNALIZED		UNSIGNALIZED	
Delay	LOS	Delay	LOS
0.0 ≤ 10.0	A	0.0 ≤ 10.0	A
10.1 to 20.0	B	10.1 to 15.0	B
20.1 to 35.0	C	15.1 to 25.0	C
35.1 to 55.0	D	25.1 to 35.0	D
55.1 to 80.0	E	35.1 to 50.0	E
≥ 80.1	F	≥ 50.1	F

12.3 Sensitivity Analysis

LLG conducted a sensitivity analysis to determine the approximate number of additional FTE students USD could theoretically enroll before triggering the direct and cumulative impacts listed above. This analysis could be used to help determine when the proposed mitigation measures for each impacted location would be needed.

The analysis was conducted using a trial and error process. Based on the applicable trip rate (either 3.4 ADT / FTE for Near-Term direct impacts or 3.1 ADT / FTE for Long-Term cumulative impacts), trip generation forecasts were prepared for every additional 50 FTE, for example trip generation calculations were prepared for 50 FTE, 100 FTE, 150 FTE, etc., up to the total additional 3,000 FTE proposed by the Project. Using the calculated trip generation calculations and resultant trip assignment at the impacted locations, analysis was conducted using a trial and error approach until significant impacts were no longer calculated. ***Table 12-3*** summarizes the results of the sensitivity analysis. Further information on the sensitivity analysis, including Synchro analysis sheets and segment analysis tables is included in ***Appendix P.***

TABLE 12–3
SENSITIVITY ANALYSIS RESULTS

Impacted Location	Additional FTE Students Before Impact is Triggered
Intersections	
Linda Vista Road / Napa Street	400 FTE
Linda Vista Road / Colusa Street	50 FTE
Linda Vista Road / Alcala Apartments Entrance	500 FTE
Street Segments	
Linda Vista Road: Napa Street to Marian Way / Mildred Street	350 FTE

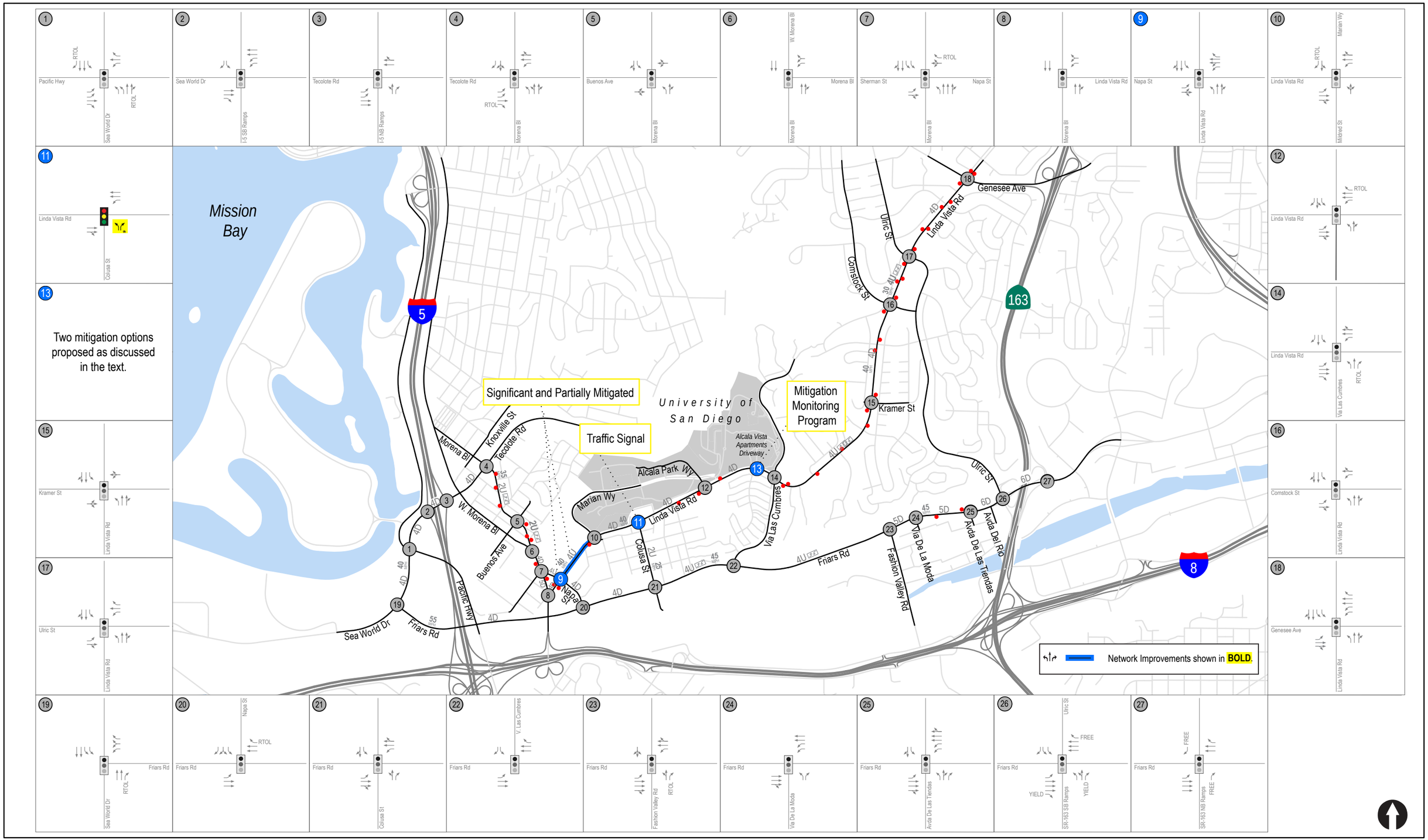

Linscott Law & Greenspan engineers

N:\2341\Figures\June 2016
Date: 10/26/16

NOTE:

* Signal mitigates the significant impact. It is recommended, but not required from a level of service standpoint, to eliminate parking (approximately six spaces) along the east curb of Colusa Street to provide a dedicated 150-foot northbound left-turn lane and a dedicated northbound right-turn lane at Linda Vista Road, such that right-turning drivers do not need to wait behind left-turning vehicles.

Figure 12-1

Near-Term Impacts & Mitigation Measures

USD Master Plan Update

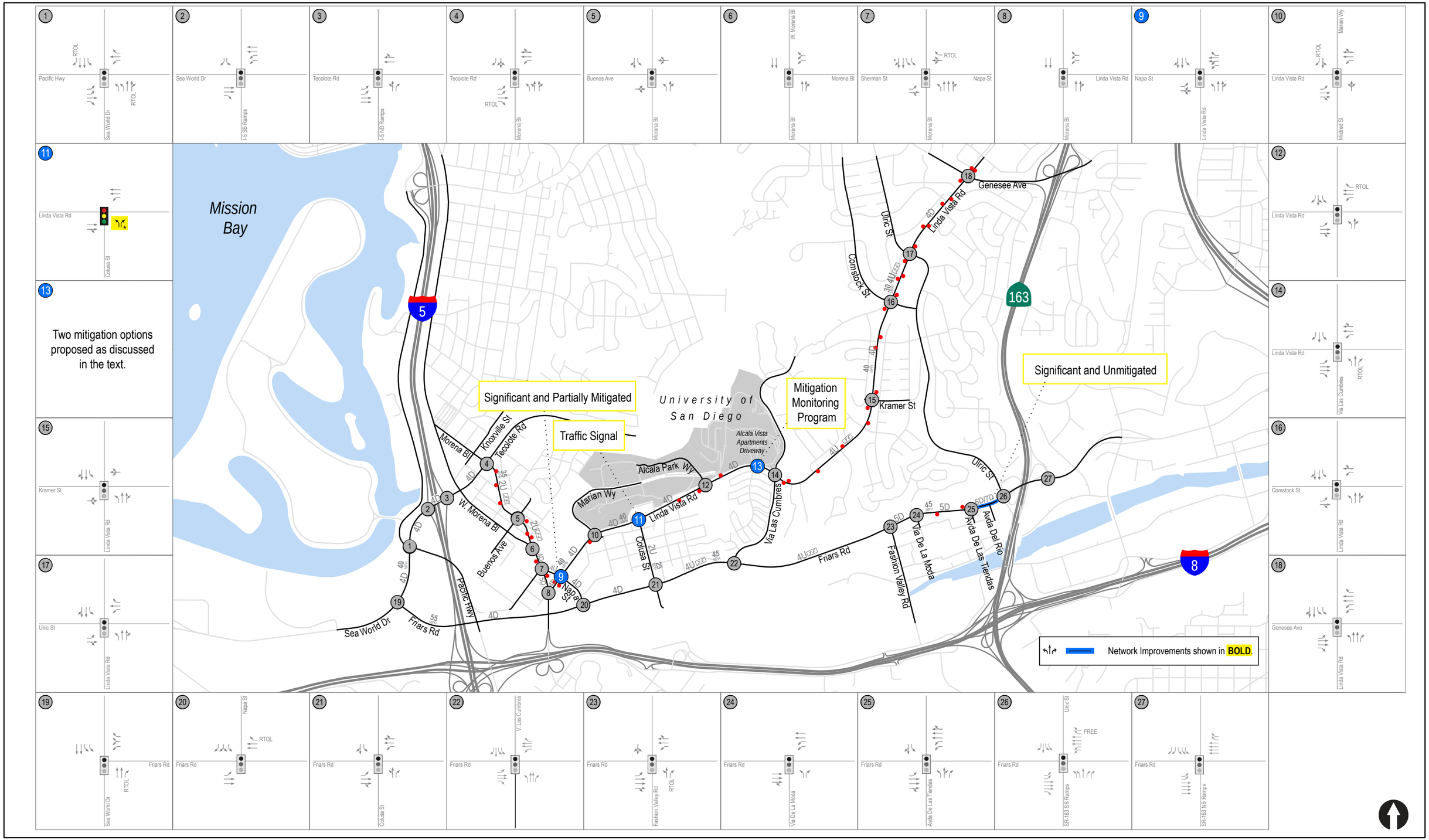

LINSCOTT LAW & GREENSPAN engineers

N:\2341\Figures\June 2016
Date: 10/26/16

NOTE:

* Signal mitigates the significant impact. It is recommended, but not required from a level of service standpoint, to eliminate parking (approximately six spaces) along the east curb of Colusa Street to provide a dedicated 150-foot northbound left-turn lane and a dedicated northbound right-turn lane at Linda Vista Road, such that right-turning drivers do not need to wait behind left-turning vehicles.

Figure 12-2

Long-Term Impacts & Mitigation Measures

USD MASTER PLAN UPDATE

LINSCOTT
LAW &
GREENSPAN
engineers

TECHNICAL APPENDICES

USD MASTER PLAN UPDATE

San Diego, California
November 8, 2016

LLG Ref. 3-14-2341

**Linscott, Law &
Greenspan, Engineers**
4542 Ruffner Street
Suite 100
San Diego, CA 92111
858.300.8800 T
858.300.8810 F
www.llgengineers.com

APPENDIX A

TRIP GENERATION RATES FROM: (1) CITY OF SAN DIEGO, (2) THE TRAFFIC CIRCULATION AND PARKING REPORT FROM THE PROPOSED USD MASTER PLAN EIR, APRIL 19, 1996, AND (3) MEMO DATED MAY 3, 2010, KIMLEY HORN AND ASSOCIATES

San Diego Municipal Code

Land Development Code

Trip Generation Manual

Revised May 2003

Printed on recycled paper

This information, document, or portions thereof, will be made available in alternative formats upon request.

TRIP GENERATION RATE SUMMARY
(WEEKDAY)

LAND USE	DRIVEWAY VEHICLE TRIP RATE [1] [2]	CUMULATIVE VEHICLE TRIP RATE [8]	PEAK HOUR AND IN/OUT RATIO AM (IN:OUT)	PM (IN:OUT)
EDUCATION [3]				
University (4 years or higher)	2.5 trips/student; 100 trips/acre	2.5 trips/student; 100 trips/acre	10% (9:1)	9% (3:7)
Community College (2 years)	1.6 trips/student; 18 trips/1,000 sq. ft.; 80 trips/acre	1.6 trips/student; 18 trips/1,000 sq. ft.; 80 trips/acre	12% (9:1)	8% (3:7)
High School	1.8 trips/student; 50 trips/acre; 11 trips/1,000 sq. ft.	1.8 trips/student; 50 trips/acre; 11 trips/1,000 sq. ft.	20% (8:2)	14% (3:7)
Junior High/Middle School	1.4 trip/student; 12 trips/1,000 sq. ft.; 40 trips/acre	1.4 trips/student; 12 trips/1,000 sq. ft.; 40 trips/acre	24% (7:3)	7% (3:7)
Elementary School	2.9 trips/student; 39 trips/1,000 sq. ft.; 136 trips/acre	2.9 trips/student; 39 trips/1,000 sq ft.; 136 trips/acre	31% (6:4)	19% (4:6)
Day Care Center	5 trips/child; 80 trips/1,000 sq. ft.	5 trips/child; 80 trips/1,000 sq. ft.	19% (5:5)	18% (5:5)
FINANCIAL INSTITUTION (Bank or Credit Union) [5]				
Excluding drive-through	150 trips/1,000 sq. ft.; 1,000 trips/acre	112.5 trips/1,000 sq. ft.; 750 trips/acre	4% (7:3)	8% (4:6)
With drive-through	200 trips/1,000 sq. ft.; 1,500 trips/acre	150 trips/1,000 sq. ft.; 1,125 trips/acre	5% (6:4)	10% (5:5)
Drive-through only	250 trips/lane	187.5 trips/lane	3% (5:5)	13% (5:5)
HOSPITAL [3]				
Convalescent/Nursing	3 trips/bed	3 trips/bed	7% (6:4)	7% (4:6)
General	20 trips/bed; 20 trips/1,000 sq. ft.; 300 trips/acre	20 trips/bed; 20 trips/1,000 sq. ft.; 300 trips/acre	9% (7:3)	10% (3:7)
HOUSE OF WORSHIP [4]				
General	15 trips/1,000 sq. ft.; quadruple rates for days of	9 trips/1,000 sq. ft.; quadruple rate for days of	4% (8:2)	8% (5:5)
Without School or Day Care	5 trips/1,000 sq. ft.; quadruple rates for days of assembly	5 trips/1,000 sq. ft.; quadruple rate for days of	4% (8:2)	8% (5:5)
INDUSTRIAL				
Industrial/Business Park (some commercial included) [3]	16 trips/1,000 sq. ft.; 200 trips/acre	16 trips/1,000 sq. ft.; 200 trips/acre	12% (8:2)	12% (2:8)
Small Industrial Park [7] *	15 trips/1,000 sq. ft.; 120 trips/acre	15 trips/1,000 sq. ft.; 120 trips/acre	11% (9:1)	12% (2:8)
Large Industrial Park *	8 trips/1,000 sq. ft.; 100 trips/acre	8 trips/1,000 sq. ft.; 100 trips/acre	11% (9:1)	12% (2:8)
Manufacturing/Assembly	4 trips/1,000 sq. ft.; 50 trips/acre	4 trips/1,000 sq. ft.; 50 trips/acre	20% (9:1)	20% (2:8)
Rental Storage	2 trips/1,000 sq. ft.; 30 trips/acre	2 trips/1,000 sq. ft.; 30 trips/acre	6% (5:5)	9% (5:5)
Scientific Research and Development	8 trips/1,000 sq. ft.; 80 trips/acre	8 trips/1,000 sq. ft.; 80 trips/acre	16% (9:1)	14% (1:9)
Truck Terminal	10 trips/1,000 sq. ft.; 7 trips/bay; 80 trips/acre	10 trips/1,000 sq. ft.; 7 trips/bay; 80 trips/acre	9% (4:6)	8% (5:5)
Warehousing	5 trips/1,000 sq. ft.; 60 trips/acre	5 trips/1,000 sq. ft.; 60 trips/acre	15% (7:3)	16% (4:6)
LIBRARY [3]	50 trips/1,000 sq. ft.; 400 trips/acre		2% (7:3)	10% (5:5)
Less than 100,000 sq. ft.		20 trips/1,000 sq. ft.	2% (7:3)	10% (5:5)
100,000 sq. ft. or more		16 trips/1,000 sq. ft.	2% (7:3)	10% (5:5)

* Small amount of local serving commercial included. May have multiple shifts.

APPENDIX C

TRAFFIC CIRCULATION AND PARKING REPORT

for the proposed

USD MASTER PLAN EIR

DEP No. 92-0568
SCH No. 93121032

April 19, 1996

TABLE 3
USD PROJECT VEHICULAR TRAFFIC GENERATION

Year	F.T.E. Students	2-Way ADT Rate	2-Way ADT	Street Peak Hours ** AM In	AM Out	PM In	PM Out
1993-94							
USD	5,192	3.76	*19,500	1,053	117	624	936
USD High School	1,300	1.4	1,820	307	130	113	129
		Totals =	21,320	1,360	247	737	1,065
1999-2000							
USD	***5,661	3.76	21,285	1,149	128	681	1,022
USD High School	1,300	1.4	1,820	307	130	113	129
		Totals =	23,105	1,456	258	794	1,151
2015 (Worst Case)							
USD	7,000	3.38	23,660	1,278	142	757	1,136
USD High School	1,300	1.4	1,820	307	130	113	129
		Totals =	25,480	1,585	272	870	1,265

* As machine counted in October, 1993
** As counted: AM = 6% of ADT split .9 in and .1 out; PM = 8% of ADT split .4 in and .6 out
*** At approximately 78 F.T.E. students growth per year while historically it is 30

Note on Table 3 that between now and 1999-2000, 1,785 ADT will be added by the project (23,105-21,320). Also, between now and 2015, only 4,160 ADT will be added to existing volumes by the project, (25,480-21,320).

Also note that the U.S.D. High School peak hour volumes shown in Table 3 are what were actually counted at the school. They thus should be more accurate for this unique high school than the more general, City-wide, rates.

The University contacted a representative at the high school who said that the high school is at maximum F.T.E., and does not anticipate that enrollment will increase in the future. Therefore, the 1300 enrollment figure shown inTable 3, is the same for existing and future years.

Kimley-Horn
and Associates, Inc.

Suite 600
401 B Street
San Diego, California
92101

Memorandum

To: Roger Manion, University of San Diego

From: Jon Collins, P.E., Kimley-Horn and Associates

Date: May 3, 2010

Subject: University of San Diego Trip (USD) Generation Study

The purpose of this memorandum is to compare the trip generation rate used in Appendix C of the USD Master Plan EIR, dated April 19, 1996, to a trip generation rate based on recent traffic counts and attendance data.

Traffic counts were performed at the three entrances to campus between March 18 and March 31, 2010. The data from these tube counts were used to calculate the average number of vehicles that enter and leave the campus on a given day. Only the weekday data (data from Monday thru Friday) were used to calculate the average daily traffic. Based on the traffic counts described above, USD generates an average of 23,425 trips per day.

The most recent attendance data suggests that 7,222 full time equivalent (FTE) students were enrolled at USD during the Fall 2009 semester. However, 332 FTE students attended class off campus. That leaves 6,890 FTE students who were enrolled at the university and attended class on campus.

The current trip rate can be calculated by dividing the average daily traffic generated by the university by the number of FTE students that attended class on campus. This calculation results in a trip generation rate of 3.40 trips per student. This is slightly higher than the 3.38 trips per student rate that was anticipated as part of the USD Master Plan EIR (page 31, Appendix C).

Attachments: Attendance data and traffic count data

K:\SND_TPTO\095782000\Word\Memorandum KHA 2010-05-03.doc

TEL 619 234 9411
FAX 619 234 9433

University of San Diego

Institutional Research & Planning

Full Time Equivalent (FTE) Enrollment

The most common measure of enrollment is a simple headcount of students enrolled in classes. Enrollment can also be measured as full time equivalent (FTE) students, a calculation showing how many students would be attending if all were enrolled full time. The FTE calculation is based on the number of credits carried by students enrolled in classes:

- 1 FTE undergraduate student = 15 credits
- 1 FTE graduate or paralegal student = 12 credits
- 1 FTE law school student = 14 credits

Most classes are held on the USD campus, but some are not. Examples of credits earned off campus are studies abroad, web-based instruction, and classes taught in other locations.

The FTE enrollments (rounded) for Fall 2009 are as follows:

Level	On Campus	Off Campus	Total
Undergraduate	4760	281	5041
Paralegal	182	0	182
Graduate	929	51	980
Law School*	1020	0	1020
Total FTE Students	**6890**	**332**	**7222**

* Law School includes students in J.D. (doctoral) and LL.M. (master's) programs.

Next Update: October 2010

©2010 USD. All rights reserved.

University of San Diego, 5998 Alcalá Park, San Diego, CA 92110 (619) 260-4600

Page last updated: Wednesday, January 20, 2010

Prepared by NDS/ATD

Volumes for: Average of weekdays | City: San Diego | Project #: 10-4095-001

Location: All Three Driveways

AM Period	NB		SB		EB	WB		PM Period	NB		SB		EB	WB	
00:00	34		40					12:00	206		242				
00:15	25		28					12:15	203		264				
00:30	23		22					12:30	195		200				
00:45	24	106	17	107			213	12:45	200	804	170	876			1680
01:00	18		16					13:00	201		170				
01:15	16		14					13:15	200		193				
01:30	15		11					13:30	206		166				
01:45	12	61	16	57			118	13:45	222	829	155	684			1513
02:00	13		15					14:00	259		203				
02:15	10		7					14:15	252		248				
02:30	9		15					14:30	153		222				
02:45	5	37	3	40			77	14:45	138	802	160	833			1635
03:00	3		3					15:00	132		184				
03:15	3		3					15:15	153		155				
03:30	3		2					15:30	184		188				
03:45	4	13	3	11			24	15:45	210	679	273	800			1479
04:00	4		4					16:00	163		347				
04:15	4		3					16:15	149		227				
04:30	5		3					16:30	159		266				
04:45	11	24	4	14			38	16:45	192	663	218	1058			1721
05:00	27		5					17:00	229		317				
05:15	41		8					17:15	279		321				
05:30	38		13					17:30	207		302				
05:45	56	162	14	40			202	17:45	215	930	212	1152			2082
06:00	41		11					18:00	150		198				
06:15	38		11					18:15	137		170				
06:30	54		20					18:30	173		194				
06:45	103	236	21	63			299	18:45	237	697	299	861			1558
07:00	118		19					19:00	177		273				
07:15	189		32					19:15	165		245				
07:30	273		48					19:30	126		205				
07:45	323	903	55	154			1057	19:45	131	599	158	881			1480
08:00	240		44					20:00	116		178				
08:15	256		44					20:15	102		179				
08:30	307		77					20:30	101		173				
08:45	378	1181	83	248			1429	20:45	116	435	243	773			1208
09:00	272		103					21:00	103		199				
09:15	165		66					21:15	84		142				
09:30	200		75					21:30	84		138				
09:45	214	851	81	325			1176	21:45	84	355	143	622			977
10:00	184		127					22:00	87		142				
10:15	190		108					22:15	66		95				
10:30	168		128					22:30	55		75				
10:45	157	699	114	477			1176	22:45	54	262	74	386			648
11:00	142		135					23:00	49		81				
11:15	127		135					23:15	52		63				
11:30	151		145					23:30	43		54				
11:45	185	605	189	604			1209	23:45	42	186	42	240			426
Total Vol.		4878		2140			7018			7241		9166			16407

Daily Totals

NB	SB	Combined	EB	WB
12119	11306	23425		

Daily Trip Rate
3.40

	AM			PM		
Split %	69.5%	30.5%	30.0%	44.1%	55.9%	70.0%
Peak Hour	08:15	11:45	11:45	13:30	16:45	17:00
Volume	1213	895	1684	939	1158	2082
P.H.F.	0.80	0.85	0.90	0.91	0.90	0.87

Prepared by NDS/ATD

Volumes for: Thursday, March 18, 2010 City: San Diego Project #: 10-4095-001

Location: All Three Driveways

AM Period	NB		SB		EB	WB		PM Period	NB		SB		EB	WB	
00:00	47		34					12:00	200		308				
00:15	41		28					12:15	221		296				
00:30	59		22					12:30	163		245				
00:45	42	189	31	115			304	12:45	202	786	212	1061			1847
01:00	29		19					13:00	170		168				
01:15	28		20					13:15	180		150				
01:30	32		17					13:30	209		167				
01:45	16	105	14	70			175	13:45	221	780	157	642			1422
02:00	14		10					14:00	257		268				
02:15	14		15					14:15	331		242				
02:30	13		20					14:30	149		175				
02:45	6	47	2	47			94	14:45	121	858	137	822			1680
03:00	5		4					15:00	129		181				
03:15	6		4					15:15	143		127				
03:30	6		3					15:30	187		161				
03:45	4	21	3	14			35	15:45	262	721	319	788			1509
04:00	4		7					16:00	212		392				
04:15	1		6					16:15	196		200				
04:30	6		4					16:30	210		269				
04:45	22	33	12	29			62	16:45	191	809	227	1088			1897
05:00	23		13					17:00	218		294				
05:15	27		18					17:15	305		341				
05:30	27		16					17:30	223		356				
05:45	29	106	4	51			157	17:45	242	988	225	1216			2204
06:00	44		9					18:00	192		195				
06:15	42		16					18:15	161		192				
06:30	48		20					18:30	190		173				
06:45	95	229	17	62			291	18:45	268	811	339	899			1710
07:00	119		18					19:00	215		323				
07:15	231		28					19:15	173		370				
07:30	278		40					19:30	164		181				
07:45	290	918	50	136			1054	19:45	150	702	185	1059			1761
08:00	204		40					20:00	123		207				
08:15	211		60					20:15	106		220				
08:30	360		71					20:30	138		195				
08:45	468	1243	110	281			1524	20:45	155	522	255	877			1399
09:00	370		113					21:00	105		194				
09:15	139		69					21:15	100		225				
09:30	165		61					21:30	91		182				
09:45	187	861	83	326			1187	21:45	90	386	119	720			1106
10:00	195		75					22:00	97		159				
10:15	245		121					22:15	63		87				
10:30	212		184					22:30	87		78				
10:45	130	782	176	556			1338	22:45	60	307	70	394			701
11:00	103		101					23:00	53		77				
11:15	91		106					23:15	66		64				
11:30	142		159					23:30	62		65				
11:45	177	513	238	604			1117	23:45	58	239	43	249			488
Total Vol.		5047		2291			7338			7909		9815			17724

Daily Totals

NB	SB	Combined	EB	WB
12956	12106	25062		

	AM			PM		
Split %	68.8%	31.2%	29.3%	44.6%	55.4%	70.7%
Peak Hour	08:15	11:45	11:45	13:30	16:45	17:00
Volume	1409	1087	1848	1018	1218	2204
P.H.F.	0.75	0.88	0.89	0.92	0.86	0.85

Prepared by NDS/ATD

Volumes for: Friday, March 19, 2010 City: San Diego Project #: 10-4095-001

Location: All Three Driveways

AM Period	NB		SB		EB	WB		PM Period	NB		SB		EB	WB	
00:00	29		38					12:00	202		242				
00:15	27		40					12:15	148		305				
00:30	31		29					12:30	164		205				
00:45	42	129	15	122			251	12:45	196	710	186	938			1648
01:00	12		16					13:00	288		198				
01:15	17		22					13:15	302		290				
01:30	21		9					13:30	303		208				
01:45	20	70	21	68			138	13:45	256	1149	214	910			2059
02:00	18		17					14:00	212		193				
02:15	14		11					14:15	180		236				
02:30	12		17					14:30	160		246				
02:45	6	50	4	49			99	14:45	157	709	198	873			1582
03:00	3		3					15:00	156		207				
03:15	7		3					15:15	161		177				
03:30	1		2					15:30	146		209				
03:45	2	13	4	12			25	15:45	146	609	234	827			1436
04:00	3		7					16:00	160		326				
04:15	9		2					16:15	160		320				
04:30	1		7					16:30	182		339				
04:45	13	26	7	23			49	16:45	192	694	277	1262			1956
05:00	25		2					17:00	157		313				
05:15	19		5					17:15	198		230				
05:30	35		20					17:30	172		194				
05:45	89	168	30	57			225	17:45	178	705	171	908			1613
06:00	31		14					18:00	149		178				
06:15	30		8					18:15	149		161				
06:30	46		16					18:30	167		161				
06:45	84	191	31	69			260	18:45	208	673	145	645			1318
07:00	82		11					19:00	195		162				
07:15	138		27					19:15	154		133				
07:30	204		39					19:30	121		159				
07:45	277	701	60	137			838	19:45	95	565	105	559			1124
08:00	200		45					20:00	124		87				
08:15	222		42					20:15	85		91				
08:30	285		77					20:30	81		78				
08:45	311	1018	82	246			1264	20:45	69	359	97	353			712
09:00	198		104					21:00	110		133				
09:15	152		71					21:15	70		87				
09:30	177		68					21:30	73		148				
09:45	215	742	68	311			1053	21:45	101	354	274	642			996
10:00	170		161					22:00	95		130				
10:15	135		117					22:15	79		97				
10:30	114		91					22:30	59		61				
10:45	173	592	98	467			1059	22:45	59	292	88	376			668
11:00	141		169					23:00	57		64				
11:15	146		152					23:15	83		73				
11:30	139		165					23:30	62		54				
11:45	176	602	203	689			1291	23:45	48	250	34	225			475
Total Vol.		4302		2250			6552			7069		8518			15587

Daily Totals

NB	SB		EB	WB
11371	10768	Combined		
		22139		

	AM			PM		
Split %	65.7%	34.3%	29.6%	45.4%	54.6%	70.4%
Peak Hour	08:00	11:45	11:45	13:00	16:00	13:00
Volume	1018	955	1645	1149	1262	2059
P.H.F.	0.82	0.78	0.91	0.99	0.93	0.87

Prepared by NDS/ATD

Volumes for: Monday, March 22, 2010 City: San Diego Project #: 10-4095-001

Location: All Three Driveways

AM Period	NB		SB		EB	WB		PM Period	NB		SB		EB	WB	
00:00	20		29					12:00	194		153				
00:15	17		30					12:15	219		202				
00:30	11		12					12:30	218		174				
00:45	14	62	14	85			147	12:45	212	843	143	672			1515
01:00	13		11					13:00	183		136				
01:15	4		15					13:15	173		189				
01:30	4		7					13:30	201		139				
01:45	3	24	12	45			69	13:45	227	784	129	593			1377
02:00	15		10					14:00	280		179				
02:15	6		2					14:15	264		241				
02:30	6		8					14:30	175		235				
02:45	6	33	1	21			54	14:45	148	867	159	814			1681
03:00	4		1					15:00	157		178				
03:15	2		6					15:15	169		141				
03:30	2		2					15:30	194		170				
03:45	2	10	1	10			20	15:45	235	755	258	747			1502
04:00	4		4					16:00	154		320				
04:15	3		3					16:15	164		224				
04:30	9		1					16:30	203		242				
04:45	7	23	3	11			34	16:45	234	755	182	968			1723
05:00	19		5					17:00	332		319				
05:15	25		8					17:15	323		316				
05:30	45		13					17:30	245		316				
05:45	60	149	17	43			192	17:45	266	1166	212	1163			2329
06:00	32		12					18:00	156		183				
06:15	34		6					18:15	134		125				
06:30	53		27					18:30	216		172				
06:45	116	235	21	66			301	18:45	307	813	341	821			1634
07:00	100		16					19:00	179		376				
07:15	151		20					19:15	237		259				
07:30	237		43					19:30	168		231				
07:45	334	822	55	134			956	19:45	144	728	151	1017			1745
08:00	281		42					20:00	128		182				
08:15	259		40					20:15	126		249				
08:30	307		72					20:30	124		232				
08:45	315	1162	76	230			1392	20:45	142	520	346	1009			1529
09:00	216		82					21:00	94		229				
09:15	146		70					21:15	100		104				
09:30	202		69					21:30	83		126				
09:45	226	790	82	303			1093	21:45	81	358	182	641			999
10:00	193		138					22:00	107		175				
10:15	155		94					22:15	59		107				
10:30	146		75					22:30	61		72				
10:45	172	666	62	369			1035	22:45	73	300	89	443			743
11:00	147		147					23:00	55		95				
11:15	115		118					23:15	43		68				
11:30	167		105					23:30	56		38				
11:45	192	621	144	514			1135	23:45	49	203	49	250			453
Total Vol.		4597		1831			6428			8092		9138			17230

Daily Totals

NB	SB	Combined
12689	10969	23658

	AM			PM		
Split %	71.5%	28.5%	27.2%	47.0%	53.0%	72.8%
Peak Hour	07:45	11:45	11:45	17:00	18:45	17:00
Volume	1181	673	1496	1166	1207	2329
P.H.F.	0.88	0.83	0.89	0.86	0.80	0.89

Prepared by NDS/ATD

Volumes for: Tuesday, March 23, 2010 City: San Diego Project #: 10-4095-001

Location: All Three Driveways

AM Period	NB		SB		EB	WB		PM Period	NB		SB		EB	WB	
00:00	48		46					12:00	268		314				
00:15	17		20					12:15	238		274				
00:30	16		18					12:30	227		180				
00:45	20	101	14	98			199	12:45	191	924	156	924			1848
01:00	31		24					13:00	174		168				
01:15	16		15					13:15	193		156				
01:30	11		17					13:30	196		143				
01:45	15	73	15	71			144	13:45	224	787	171	638			1425
02:00	5		13					14:00	288		204				
02:15	7		3					14:15	264		223				
02:30	2		12					14:30	154		184				
02:45	7	21	4	32			53	14:45	126	832	132	743			1575
03:00	3		3					15:00	140		137				
03:15	1		3					15:15	148		127				
03:30	5		3					15:30	190		147				
03:45	4	13	3	12			25	15:45	207	685	275	686			1371
04:00	5		6					16:00	190		447				
04:15	6		0					16:15	114		249				
04:30	3		2					16:30	125		246				
04:45	13	27	0	8			35	16:45	181	610	250	1192			1802
05:00	79		5					17:00	198		326				
05:15	155		4					17:15	291		371				
05:30	54		11					17:30	225		348				
05:45	46	334	12	32			366	17:45	211	925	200	1245			2170
06:00	45		6					18:00	148		188				
06:15	51		19					18:15	133		201				
06:30	67		19					18:30	196		198				
06:45	122	285	29	73			358	18:45	284	761	353	940			1701
07:00	158		26					19:00	180		257				
07:15	263		54					19:15	168		291				
07:30	393		82					19:30	92		172				
07:45	380	1194	53	215			1409	19:45	135	575	162	882			1457
08:00	275		42					20:00	114		203				
08:15	283		49					20:15	122		190				
08:30	340		89					20:30	117		200				
08:45	416	1314	85	265			1579	20:45	115	468	287	880			1348
09:00	357		124					21:00	92		229				
09:15	186		75					21:15	88		187				
09:30	198		83					21:30	96		138				
09:45	169	910	73	355			1265	21:45	104	380	169	723			1103
10:00	172		83					22:00	130		187				
10:15	291		101					22:15	72		105				
10:30	230		171					22:30	58		73				
10:45	158	851	170	525			1376	22:45	63	323	85	450			773
11:00	113		78					23:00	41		64				
11:15	137		98					23:15	51		58				
11:30	160		124					23:30	36		39				
11:45	202	612	173	473			1085	23:45	32	160	38	199			359
Total Vol.		5735		2159			7894			7430		9502			16932

Daily Totals

NB	SB	Combined
13165	11661	24826

	AM			PM		
Split %	72.7%	27.3%	31.8%	43.9%	56.1%	68.2%
Peak Hour	08:15	11:45	11:45	13:30	16:45	16:45
Volume	1396	941	1876	972	1295	2190
P.H.F.	0.84	0.75	0.81	0.86	0.87	0.83

Prepared by NDS/ATD

Volumes for: Wednesday, March 24, 2010 City: San Diego Project #: 10-4095-001

Location: All Three Driveways

AM Period	NB		SB		EB	WB		PM Period	NB		SB		EB	WB	
00:00	36		39					12:00	193		155				
00:15	24		21					12:15	195		213				
00:30	14		23					12:30	220		174				
00:45	22	96	16	99			195	12:45	198	806	134	676			1482
01:00	14		9					13:00	205		130				
01:15	10		8					13:15	180		169				
01:30	10		19					13:30	177		161				
01:45	15	49	14	50			99	13:45	202	764	116	576			1340
02:00	9		12					14:00	243		185				
02:15	8		6					14:15	215		283				
02:30	8		20					14:30	131		237				
02:45	3	28	4	42			70	14:45	167	756	160	865			1621
03:00	4		3					15:00	137		194				
03:15	1		2					15:15	148		131				
03:30	2		2					15:30	184		200				
03:45	4	11	3	10			21	15:45	232	701	272	797			1498
04:00	1		2					16:00	184		311				
04:15	4		3					16:15	163		192				
04:30	4		0					16:30	155		309				
04:45	7	16	0	5			21	16:45	187	689	191	1003			1692
05:00	16		2					17:00	244		312				
05:15	21		5					17:15	323		339				
05:30	45		9					17:30	213		274				
05:45	60	142	13	29			171	17:45	208	988	244	1169			2157
06:00	40		6					18:00	131		209				
06:15	26		14					18:15	145		169				
06:30	49		12					18:30	204		249				
06:45	91	206	18	50			256	18:45	249	729	350	977			1706
07:00	105		14					19:00	193		293				
07:15	164		27					19:15	162		229				
07:30	271		50					19:30	124		244				
07:45	371	911	53	144			1055	19:45	138	617	133	899			1516
08:00	257		47					20:00	126		175				
08:15	282		49					20:15	124		258				
08:30	281		59					20:30	122		224				
08:45	365	1185	82	237			1422	20:45	147	519	303	960			1479
09:00	217		100					21:00	127		259				
09:15	168		46					21:15	85		125				
09:30	251		81					21:30	76		98				
09:45	265	901	83	310			1211	21:45	84	372	151	633			1005
10:00	191		166					22:00	90		167				
10:15	168		106					22:15	49		95				
10:30	131		75					22:30	45		87				
10:45	170	660	74	421			1081	22:45	49	233	69	418			651
11:00	175		135					23:00	68		119				
11:15	115		166					23:15	72		88				
11:30	137		155					23:30	59		81				
11:45	173	600	157	613			1213	23:45	45	244	47	335			579
Total Vol.		4805		2010			6815			7418		9308			16726

Daily Totals

NB	SB	Combined
12223	11318	23541

	AM			PM		
Split %	70.5%	29.5%	28.9%	44.4%	55.6%	71.1%
Peak Hour	07:45	11:45	11:45	17:00	17:00	17:00
Volume	1191	699	1480	988	1169	2157
P.H.F.	0.80	0.82	0.91	0.77	0.86	0.81

Prepared by NDS/ATD

Volumes for: Thursday, March 25, 2010 City: San Diego Project #: 10-4095-001

Location: All Three Driveways

AM Period	NB		SB		EB	WB		PM Period	NB		SB		EB	WB	
00:00	42		51					12:00	183		317				
00:15	32		27					12:15	221		303				
00:30	17		22					12:30	169		235				
00:45	26	117	17	117			234	12:45	191	764	196	1051			1815
01:00	7		16					13:00	170		185				
01:15	7		15					13:15	234		196				
01:30	11		11					13:30	216		172				
01:45	9	34	16	58			92	13:45	242	862	162	715			1577
02:00	5		16					14:00	319		245				
02:15	7		10					14:15	283		239				
02:30	7		16					14:30	160		199				
02:45	5	24	2	44			68	14:45	137	899	131	814			1713
03:00	2		3					15:00	129		157				
03:15	5		1					15:15	154		145				
03:30	1		2					15:30	191		159				
03:45	3	11	2	8			19	15:45	232	706	325	786			1492
04:00	2		1					16:00	150		430				
04:15	7		4					16:15	133		207				
04:30	1		2					16:30	162		243				
04:45	14	24	1	8			32	16:45	217	662	230	1110			1772
05:00	29		6					17:00	231		289				
05:15	26		8					17:15	293		364				
05:30	22		25					17:30	186		342				
05:45	33	110	11	50			160	17:45	238	948	197	1192			2140
06:00	56		12					18:00	172		208				
06:15	45		20					18:15	152		184				
06:30	51		18					18:30	188		206				
06:45	114	266	21	71			337	18:45	239	751	343	941			1692
07:00	118		23					19:00	213		325				
07:15	232		28					19:15	160		267				
07:30	309		43					19:30	143		203				
07:45	294	953	49	143			1096	19:45	168	684	166	961			1645
08:00	255		48					20:00	127		237				
08:15	282		53					20:15	119		210				
08:30	335		93					20:30	96		189				
08:45	451	1323	97	291			1614	20:45	117	459	182	818			1277
09:00	388		99					21:00	118		164				
09:15	194		71					21:15	84		170				
09:30	191		77					21:30	120		216				
09:45	190	963	97	344			1307	21:45	109	431	153	703			1134
10:00	215		90					22:00	73		144				
10:15	284		128					22:15	57		90				
10:30	250		208					22:30	40		68				
10:45	152	901	160	586			1487	22:45	36	206	63	365			571
11:00	116		126					23:00	54		100				
11:15	144		84					23:15	40		61				
11:30	164		150					23:30	35		58				
11:45	198	622	254	614			1236	23:45	42	171	53	272			443
Total Vol.		5348		2334			7682			7543		9728			17271

Daily Totals

NB	SB		EB	WB
12891	12062	Combined		
		24953		

	AM			PM		
Split %	69.6%	30.4%	30.8%	43.7%	56.3%	69.2%
Peak Hour	08:15	11:45	11:45	13:30	16:45	16:45
Volume	1456	1109	1880	1060	1225	2152
P.H.F.	0.81	0.87	0.90	0.86	0.84	0.82

Prepared by NDS/ATD

Volumes for: Friday, March 26, 2010 City: San Diego Project #: 10-4095-001

Location: All Three Driveways

AM Period	NB		SB		EB	WB		PM Period	NB		SB		EB	WB	
00:00	33		44					12:00	240		216				
00:15	35		38					12:15	230		327				
00:30	27		20					12:30	178		251				
00:45	33	128	19	121			249	12:45	223	871	187	981			1852
01:00	38		28					13:00	228		176				
01:15	36		15					13:15	217		266				
01:30	30		10					13:30	196		234				
01:45	17	121	16	69			190	13:45	212	853	206	882			1735
02:00	22		27					14:00	171		228				
02:15	29		9					14:15	193		239				
02:30	18		17					14:30	159		261				
02:45	9	78	8	61			139	14:45	150	673	216	944			1617
03:00	8		7					15:00	118		205				
03:15	1		1					15:15	134		189				
03:30	3		2					15:30	174		220				
03:45	5	17	4	14			31	15:45	162	588	220	834			1422
04:00	7		6					16:00	164		260				
04:15	2		1					16:15	145		210				
04:30	10		7					16:30	147		256				
04:45	8	27	5	19			46	16:45	175	631	217	943			1574
05:00	13		1					17:00	171		285				
05:15	24		3					17:15	164		204				
05:30	55		17					17:30	158		178				
05:45	65	157	28	49			206	17:45	160	653	213	880			1533
06:00	39		13					18:00	132		202				
06:15	43		6					18:15	109		149				
06:30	64		25					18:30	147		124				
06:45	97	243	20	64			307	18:45	204	592	157	632			1224
07:00	111		24					19:00	206		133				
07:15	157		30					19:15	191		128				
07:30	238		48					19:30	147		138				
07:45	292	798	64	166			964	19:45	110	654	141	540			1194
08:00	236		52					20:00	76		85				
08:15	230		32					20:15	71		83				
08:30	320		81					20:30	57		101				
08:45	382	1168	89	254			1422	20:45	102	306	215	484			790
09:00	197		109					21:00	126		220				
09:15	138		69					21:15	91		117				
09:30	170		69					21:30	75		90				
09:45	227	732	72	319			1051	21:45	69	361	85	512			873
10:00	158		167					22:00	81		105				
10:15	120		108					22:15	104		127				
10:30	138		95					22:30	56		90				
10:45	155	571	76	446			1017	22:45	63	304	99	421			725
11:00	185		187					23:00	39		102				
11:15	129		199					23:15	77		91				
11:30	165		160					23:30	43		67				
11:45	191	670	191	737			1407	23:45	48	207	38	298			505
Total Vol.		4710		2319			7029			6693		8351			15044

Daily Totals

NB	SB		EB	WB
11403	10670	Combined		
		22073		

	AM			PM		
Split %	67.0%	33.0%	31.8%	44.5%	55.5%	68.2%
Peak Hour	08:00	11:45	11:45	12:00	12:00	12:00
Volume	1168	985	1824	871	981	1852
P.H.F.	0.76	0.75	0.82	0.86	0.75	0.83

Prepared by NDS/ATD

Volumes for: Monday, March 29, 2010 City: San Diego Project #: 10-4095-001

Location: All Three Driveways

AM Period	NB		SB		EB	WB		PM Period	NB		SB		EB	WB	
00:00	27		39					12:00	203		188				
00:15	19		17					12:15	187		213				
00:30	13		26					12:30	209		163				
00:45	19	78	13	95			173	12:45	218	817	137	701			1518
01:00	5		10					13:00	182		152				
01:15	7		7					13:15	174		183				
01:30	7		6					13:30	154		120				
01:45	8	27	15	38			65	13:45	192	702	122	577			1279
02:00	7		6					14:00	267		159				
02:15	1		1					14:15	276		285				
02:30	8		8					14:30	152		231				
02:45	8	24	0	15			39	14:45	125	820	144	819			1639
03:00	1		5					15:00	117		197				
03:15	1		1					15:15	141		167				
03:30	2		3					15:30	189		205				
03:45	4	8	2	11			19	15:45	188	635	232	801			1436
04:00	3		3					16:00	105		311				
04:15	3		2					16:15	135		199				
04:30	8		8					16:30	135		233				
04:45	8	22	1	14			36	16:45	197	572	164	907			1479
05:00	20		7					17:00	257		309				
05:15	25		7					17:15	319		332				
05:30	31		7					17:30	222		330				
05:45	57	133	9	30			163	17:45	236	1034	224	1195			2229
06:00	36		10					18:00	124		187				
06:15	35		6					18:15	111		156				
06:30	51		29					18:30	172		223				
06:45	111	233	15	60			293	18:45	245	652	338	904			1556
07:00	108		17					19:00	142		343				
07:15	167		29					19:15	152		260				
07:30	253		52					19:30	95		272				
07:45	353	881	57	155			1036	19:45	151	540	222	1097			1637
08:00	217		45					20:00	134		251				
08:15	240		34					20:15	86		189				
08:30	256		66					20:30	99		209				
08:45	331	1044	72	217			1261	20:45	113	432	265	914			1346
09:00	230		91					21:00	100		226				
09:15	181		56					21:15	77		123				
09:30	218		76					21:30	89		162				
09:45	254	883	78	301			1184	21:45	72	338	123	634			972
10:00	189		143					22:00	56		123				
10:15	133		80					22:15	67		90				
10:30	158		99					22:30	66		82				
10:45	177	657	63	385			1042	22:45	42	231	70	365			596
11:00	156		136					23:00	48		71				
11:15	142		142					23:15	19		51				
11:30	156		129					23:30	29		42				
11:45	183	637	141	548			1185	23:45	36	132	56	220			352
Total Vol.		4627		1869			6496			6905		9134			16039

Daily Totals

NB	SB	Combined	EB	WB
11532	11003	22535		

	AM			PM		
Split %	71.2%	28.8%	28.8 %	43.1%	56.9%	71.2 %
Peak Hour	07:45	11:45	11:45	17:00	18:45	17:00
Volume	1066	705	1487	1034	1213	2229
P.H.F.	0.75	0.83	0.93	0.80	0.88	0.86

Prepared by NDS/ATD

Volumes for: Tuesday, March 30, 2010 City: San Diego Project #: 10-4095-001

Location: All Three Driveways

AM Period	NB		SB		EB	WB		PM Period	NB		SB		EB	WB	
00:00	32		41					12:00	184		328				
00:15	19		33					12:15	186		292				
00:30	21		21					12:30	172		208				
00:45	10	82	15	110			192	12:45	175	717	164	992			1709
01:00	8		12					13:00	209		170				
01:15	14		11					13:15	192		147				
01:30	12		9					13:30	213		143				
01:45	10	44	16	48			92	13:45	243	857	112	572			1429
02:00	9		15					14:00	290		158				
02:15	7		3					14:15	266		217				
02:30	7		14					14:30	133		193				
02:45	2	25	3	35			60	14:45	97	786	126	694			1480
03:00	2		1					15:00	121		156				
03:15	4		2					15:15	147		136				
03:30	2		1					15:30	194		163				
03:45	3	11	2	6			17	15:45	240	702	303	758			1460
04:00	6		2					16:00	129		353				
04:15	1		3					16:15	145		240				
04:30	3		2					16:30	133		255				
04:45	9	19	3	10			29	16:45	153	560	218	1066			1626
05:00	27		3					17:00	227		362				
05:15	54		8					17:15	274		362				
05:30	28		5					17:30	226		346				
05:45	34	143	8	24			167	17:45	203	930	209	1279			2209
06:00	48		10					18:00	155		212				
06:15	38		9					18:15	142		152				
06:30	63		10					18:30	136		221				
06:45	107	256	29	58			314	18:45	213	646	328	913			1559
07:00	155		21					19:00	144		273				
07:15	217		43					19:15	130		298				
07:30	282		47					19:30	121		212				
07:45	294	948	39	150			1098	19:45	131	526	166	949			1475
08:00	228		35					20:00	114		183				
08:15	278		46					20:15	94		138				
08:30	307		87					20:30	109		192				
08:45	424	1237	57	225			1462	20:45	122	439	202	715			1154
09:00	331		113					21:00	92		209				
09:15	185		70					21:15	80		197				
09:30	207		92					21:30	66		128				
09:45	175	898	75	350			1248	21:45	80	318	91	625			943
10:00	174		76					22:00	79		122				
10:15	220		108					22:15	63		82				
10:30	193		186					22:30	51		73				
10:45	125	712	179	549			1261	22:45	45	238	63	340			578
11:00	107		112					23:00	50		66				
11:15	115		109					23:15	43		48				
11:30	141		132					23:30	30		61				
11:45	181	544	195	548			1092	23:45	47	170	46	221			391
Total Vol.		4919		2113			7032			6889		9124			16013

Daily Totals

NB	SB	Combined	EB	WB
11808	11237	23045		

	AM			PM		
Split %	70.0%	30.0%	30.5%	43.0%	57.0%	69.5%
Peak Hour	08:15	11:45	11:45	13:30	16:45	17:00
Volume	1340	1023	1746	1012	1288	2209
P.H.F.	0.79	0.78	0.85	0.89	0.89	0.87

Prepared by NDS/ATD

Volumes for: Wednesday, March 31, 2010 City: San Diego Project #: 10-4095-001

Location: All Three Driveways

AM Period	NB		SB		EB	WB		PM Period	NB		SB		EB	WB	
00:00	26		36					12:00	194		197				
00:15	18		27					12:15	186		216				
00:30	20		26					12:30	230		160				
00:45	16	80	15	104			184	12:45	196	806	186	759			1565
01:00	20		18					13:00	200		213				
01:15	17		16					13:15	150		188				
01:30	16		6					13:30	190		175				
01:45	7	60	21	61			121	13:45	197	737	159	735			1472
02:00	21		21					14:00	264		211				
02:15	11		6					14:15	245		275				
02:30	13		13					14:30	156		263				
02:45	1	46	3	43			89	14:45	148	813	192	941			1754
03:00	2		0					15:00	117		227				
03:15	3		2					15:15	187		208				
03:30	3		0					15:30	187		248				
03:45	7	15	2	4			19	15:45	199	690	287	970			1660
04:00	1		2					16:00	181		319				
04:15	7		5					16:15	133		228				
04:30	5		1					16:30	136		265				
04:45	8	21	5	13			34	16:45	189	639	221	1033			1672
05:00	17		5					17:00	257		358				
05:15	30		18					17:15	304		348				
05:30	37		11					17:30	197		333				
05:45	88	172	10	44			216	17:45	212	970	225	1264			2234
06:00	36		13					18:00	142		222				
06:15	40		10					18:15	135		214				
06:30	47		24					18:30	117		212				
06:45	89	212	11	58			270	18:45	150	544	291	939			1483
07:00	124		20					19:00	107		248				
07:15	171		36					19:15	125		218				
07:30	263		36					19:30	86		241				
07:45	345	903	67	159			1062	19:45	84	402	147	854			1256
08:00	249		43					20:00	92		168				
08:15	271		36					20:15	83		165				
08:30	278		76					20:30	71		111				
08:45	319	1117	81	236			1353	20:45	78	324	275	719			1043
09:00	215		98					21:00	61		127				
09:15	161		66					21:15	66		86				
09:30	217		75					21:30	75		87				
09:45	236	829	97	336			1165	21:45	54	256	85	385			641
10:00	183		169					22:00	63		104				
10:15	153		112					22:15	50		71				
10:30	108		97					22:30	31		63				
10:45	156	600	85	463			1063	22:45	50	194	45	283			477
11:00	179		158					23:00	26		48				
11:15	134		171					23:15	26		24				
11:30	138		167					23:30	15		32				
11:45	176	627	191	687			1314	23:45	19	86	15	119			205
Total Vol.		4682		2208			6890			6461		9001			15462

Daily Totals

NB	SB	Combined
11143	11209	22352

	AM			PM		
Split %	68.0%	32.0%	30.8%	41.8%	58.2%	69.2%
Peak Hour	07:45	11:30	11:45	17:00	17:00	17:00
Volume	1143	771	1550	970	1264	2234
P.H.F.	0.83	0.89	0.96	0.79	0.88	0.86

Prepared by NDS/ATD

Volumes for: Thursday, March 18, 2010 City: San Diego Project #: 10-4095-001

Location: Marian Way just N/o Linda Vista Rd

AM Period	NB		SB		EB	WB		PM Period	NB		SB		EB	WB	
00:00	1		6					12:00	58		149				
00:15	2		9					12:15	64		137				
00:30	4		1					12:30	45		89				
00:45	4	11	5	21			32	12:45	60	227	70	445			672
01:00	4		5					13:00	51		56				
01:15	4		8					13:15	68		51				
01:30	4		4					13:30	57		65				
01:45	3	15	6	23			38	13:45	78	254	52	224			478
02:00	3		4					14:00	99		74				
02:15	1		6					14:15	147		69				
02:30	5		16					14:30	58		68				
02:45	1	10	0	26			36	14:45	48	352	33	244			596
03:00	1		0					15:00	30		79				
03:15	2		1					15:15	54		61				
03:30	0		2					15:30	56		76				
03:45	0	3	1	4			7	15:45	112	252	129	345			597
04:00	2		0					16:00	67		193				
04:15	0		4					16:15	69		62				
04:30	3		0					16:30	67		103				
04:45	15	20	12	16			36	16:45	42	245	77	435			680
05:00	12		4					17:00	57		122				
05:15	13		4					17:15	97		121				
05:30	12		4					17:30	66		154				
05:45	11	48	0	12			60	17:45	89	309	82	479			788
06:00	20		8					18:00	52		68				
06:15	17		3					18:15	48		50				
06:30	19		9					18:30	44		69				
06:45	31	87	2	22			109	18:45	74	218	150	337			555
07:00	50		8					19:00	32		119				
07:15	108		3					19:15	26		125				
07:30	120		12					19:30	17		41				
07:45	105	383	16	39			422	19:45	20	95	43	328			423
08:00	75		11					20:00	15		45				
08:15	83		13					20:15	10		61				
08:30	131		19					20:30	14		71				
08:45	219	508	30	73			581	20:45	8	47	112	289			336
09:00	171		48					21:00	8		60				
09:15	44		29					21:15	10		89				
09:30	53		20					21:30	8		63				
09:45	74	342	30	127			469	21:45	8	34	34	246			280
10:00	74		25					22:00	10		28				
10:15	119		23					22:15	6		19				
10:30	98		69					22:30	10		13				
10:45	53	344	82	199			543	22:45	6	32	10	70			102
11:00	30		31					23:00	4		11				
11:15	25		30					23:15	5		8				
11:30	51		51					23:30	3		10				
11:45	66	172	90	202			374	23:45	1	13	5	34			47
Total Vol.		1943		764			2707			2078		3476			5554

Daily Totals

NB	SB	Combined	EB	WB
4021	4240	8261		

	AM			PM		
Split %	71.8%	28.2%	32.8%	37.4%	62.6%	67.2%
Peak Hour	08:15	11:45	08:15	13:45	15:45	15:45
Volume	604	465	714	382	487	802
P.H.F.	0.69	0.78	0.72	0.80	0.63	0.77

Prepared by NDS/ATD

Volumes for: Friday, March 19, 2010 City: San Diego Project #: 10-4095-001

Location: Marian Way just N/o Linda Vista Rd

AM Period	NB		SB		EB	WB		PM Period	NB		SB		EB	WB	
00:00	2		12					12:00	55		76				
00:15	2		5					12:15	36		142				
00:30	2		6					12:30	40		71				
00:45	2	8	1	24			32	12:45	70	201	58	347			548
01:00	2		2					13:00	119		70				
01:15	3		6					13:15	110		94				
01:30	0		4					13:30	112		60				
01:45	3	8	5	17			25	13:45	92	433	78	302			735
02:00	1		7					14:00	64		63				
02:15	0		2					14:15	37		70				
02:30	0		11					14:30	38		94				
02:45	0	1	0	20			21	14:45	36	175	53	280			455
03:00	0		1					15:00	26		85				
03:15	2		0					15:15	40		60				
03:30	0		2					15:30	31		70				
03:45	1	3	1	4			7	15:45	29	126	94	309			435
04:00	2		0					16:00	26		175				
04:15	0		1					16:15	26		153				
04:30	1		0					16:30	39		131				
04:45	4	7	1	2			9	16:45	31	122	61	520			642
05:00	9		0					17:00	17		83				
05:15	12		2					17:15	40		71				
05:30	6		1					17:30	30		56				
05:45	12	39	2	5			44	17:45	36	123	37	247			370
06:00	14		3					18:00	26		49				
06:15	17		3					18:15	30		43				
06:30	19		4					18:30	31		34				
06:45	27	77	8	18			95	18:45	53	140	24	150			290
07:00	36		3					19:00	51		44				
07:15	62		7					19:15	30		30				
07:30	84		9					19:30	17		40				
07:45	108	290	7	26			316	19:45	17	115	31	145			260
08:00	55		7					20:00	12		26				
08:15	92		7					20:15	12		19				
08:30	112		21					20:30	7		16				
08:45	128	387	20	55			442	20:45	6	37	24	85			122
09:00	67		45					21:00	5		12				
09:15	50		22					21:15	7		14				
09:30	71		16					21:30	6		49				
09:45	73	261	18	101			362	21:45	9	27	99	174			201
10:00	54		71					22:00	5		24				
10:15	52		43					22:15	6		14				
10:30	35		24					22:30	7		6				
10:45	76	217	31	169			386	22:45	0	18	9	53			71
11:00	55		60					23:00	6		6				
11:15	30		63					23:15	8		9				
11:30	37		46					23:30	5		8				
11:45	46	168	57	226			394	23:45	5	24	6	29			53
Total Vol.		1466		667			2133			1541		2641			4182

Daily Totals

NB	SB	Combined	EB	WB
3007	3308	6315		

	AM			PM		
Split %	68.7%	31.3%	33.8%	36.8%	63.2%	66.2%
Peak Hour	08:15	11:45	11:45	13:00	15:45	13:00
Volume	399	346	523	433	553	735
P.H.F.	0.78	0.61	0.73	0.95	0.79	0.90

Prepared by NDS/ATD

Volumes for: Monday, March 22, 2010 City: San Diego Project #: 10-4095-001

Location: Marian Way just N/o Linda Vista Rd

AM Period	NB		SB		EB	WB		PM Period	NB		SB		EB	WB	
00:00	1		6					12:00	71		71				
00:15	1		12					12:15	86		91				
00:30	3		6					12:30	78		48				
00:45	1	6	9	33			39	12:45	78	313	48	258			571
01:00	3		5					13:00	66		68				
01:15	2		9					13:15	66		69				
01:30	0		4					13:30	68		58				
01:45	0	5	5	23			28	13:45	79	279	42	237			516
02:00	0		6					14:00	109		67				
02:15	1		1					14:15	89		76				
02:30	1		3					14:30	44		97				
02:45	1	3	1	11			14	14:45	51	293	45	285			578
03:00	1		1					15:00	43		77				
03:15	1		1					15:15	60		57				
03:30	0		1					15:30	60		79				
03:45	0	2	0	3			5	15:45	74	237	105	318			555
04:00	2		2					16:00	50		161				
04:15	0		2					16:15	40		97				
04:30	0		1					16:30	39		89				
04:45	2	4	1	6			10	16:45	47	176	69	416			592
05:00	12		1					17:00	98		104				
05:15	13		1					17:15	105		147				
05:30	12		2					17:30	70		127				
05:45	12	49	2	6			55	17:45	62	335	57	435			770
06:00	18		5					18:00	41		70				
06:15	18		0					18:15	38		40				
06:30	17		8					18:30	67		60				
06:45	65	118	5	18			136	18:45	88	234	159	329			563
07:00	44		5					19:00	34		134				
07:15	70		5					19:15	11		77				
07:30	95		7					19:30	17		52				
07:45	117	326	16	33			359	19:45	15	77	50	313			390
08:00	82		16					20:00	25		58				
08:15	88		9					20:15	12		96				
08:30	113		24					20:30	15		92				
08:45	127	410	23	72			482	20:45	20	72	113	359			431
09:00	68		34					21:00	7		78				
09:15	62		14					21:15	13		32				
09:30	89		17					21:30	14		58				
09:45	120	339	15	80			419	21:45	16	50	98	266			316
10:00	64		67					22:00	8		58				
10:15	41		30					22:15	6		40				
10:30	60		25					22:30	6		22				
10:45	80	245	21	143			388	22:45	4	24	15	135			159
11:00	60		70					23:00	7		20				
11:15	35		58					23:15	1		15				
11:30	49		32					23:30	6		12				
11:45	67	211	57	217			428	23:45	5	19	15	62			81
Total Vol.		1718		645			2363			2109		3413			5522

Daily Totals

NB	SB	Combined	EB	WB
3827	4058	7885		

	AM			PM		
Split %	72.7%	27.3%	30.0%	38.2%	61.8%	70.0%
Peak Hour	08:00	11:45	11:45	13:30	15:45	17:00
Volume	410	267	569	345	452	770
P.H.F.	0.81	0.73	0.80	0.84	0.70	0.76

Prepared by NDS/ATD

Volumes for: Tuesday, March 23, 2010 City: San Diego Project #: 10-4095-001

Location: Marian Way just N/o Linda Vista Rd

AM Period	NB		SB		EB	WB		PM Period	NB		SB		EB	WB	
00:00	4		12					12:00	90		173				
00:15	3		10					12:15	68		140				
00:30	0		7					12:30	61		62				
00:45	0	7	6	35			42	12:45	50	269	70	445			714
01:00	3		4					13:00	57		74				
01:15	0		7					13:15	64		63				
01:30	0		7					13:30	71		57				
01:45	2	5	6	24			29	13:45	79	271	66	260			531
02:00	0		5					14:00	135		80				
02:15	2		2					14:15	89		81				
02:30	0		11					14:30	42		75				
02:45	2	4	1	19			23	14:45	40	306	51	287			593
03:00	0		1					15:00	41		63				
03:15	1		0					15:15	44		47				
03:30	0		3					15:30	66		70				
03:45	0	1	0	4			5	15:45	80	231	135	315			546
04:00	2		2					16:00	50		226				
04:15	2		0					16:15	25		82				
04:30	1		1					16:30	31		92				
04:45	5	10	0	3			13	16:45	55	161	117	517			678
05:00	47		2					17:00	63		116				
05:15	111		0					17:15	108		150				
05:30	19		5					17:30	84		154				
05:45	20	197	3	10			207	17:45	80	335	81	501			836
06:00	18		3					18:00	53		82				
06:15	15		5					18:15	44		61				
06:30	22		9					18:30	67		53				
06:45	49	104	14	31			135	18:45	86	250	151	347			597
07:00	71		7					19:00	39		114				
07:15	113		29					19:15	30		82				
07:30	168		39					19:30	15		51				
07:45	133	485	21	96			581	19:45	17	101	45	292			393
08:00	87		16					20:00	11		69				
08:15	97		12					20:15	20		82				
08:30	121		27					20:30	16		92				
08:45	206	511	40	95			606	20:45	23	70	138	381			451
09:00	142		63					21:00	19		91				
09:15	63		30					21:15	12		67				
09:30	52		36					21:30	17		42				
09:45	71	328	27	156			484	21:45	21	69	76	276			345
10:00	77		33					22:00	10		42				
10:15	148		30					22:15	10		32				
10:30	104		73					22:30	10		15				
10:45	63	392	83	219			611	22:45	7	37	31	120			157
11:00	22		32					23:00	0		13				
11:15	39		35					23:15	4		21				
11:30	57		41					23:30	8		13				
11:45	78	196	70	178			374	23:45	2	14	8	55			69
Total Vol.		2240		870			3110			2114		3796			5910

Daily Totals

NB	SB	Combined	EB	WB
4354	4666	**9020**		

	AM			PM		
Split %	72.0%	28.0%	34.5%	35.8%	64.2%	65.5%
Peak Hour	08:15	11:45	11:45	13:30	16:45	16:45
Volume	566	445	742	374	537	847
P.H.F.	0.69	0.64	0.71	0.78	0.87	0.82

Prepared by NDS/ATD

Volumes for: Wednesday, March 24, 2010 City: San Diego Project #: 10-4095-001

Location: Marian Way just N/o Linda Vista Rd

AM Period	NB		SB		EB	WB		PM Period	NB		SB		EB	WB	
00:00	3		16					12:00	62		68				
00:15	4		10					12:15	80		108				
00:30	3		3					12:30	88		57				
00:45	1	11	3	32			43	12:45	82	312	44	277			589
01:00	2		2					13:00	80		45				
01:15	1		4					13:15	82		81				
01:30	0		7					13:30	63		60				
01:45	3	6	6	19			25	13:45	81	306	51	237			543
02:00	0		5					14:00	94		67				
02:15	4		3					14:15	83		113				
02:30	2		17					14:30	38		116				
02:45	1	7	1	26			33	14:45	39	254	63	359			613
03:00	1		1					15:00	35		80				
03:15	1		1					15:15	58		48				
03:30	2		1					15:30	52		91				
03:45	3	7	2	5			12	15:45	93	238	96	315			553
04:00	0		0					16:00	43		156				
04:15	1		1					16:15	49		69				
04:30	2		0					16:30	40		143				
04:45	6	9	0	1			10	16:45	59	191	88	456			647
05:00	6		0					17:00	66		104				
05:15	14		1					17:15	108		157				
05:30	12		1					17:30	68		131				
05:45	12	44	3	5			49	17:45	52	294	81	473			767
06:00	21		3					18:00	23		75				
06:15	10		7					18:15	32		54				
06:30	17		3					18:30	55		92				
06:45	40	88	9	22			110	18:45	67	177	112	333			510
07:00	49		3					19:00	27		92				
07:15	78		8					19:15	17		59				
07:30	115		6					19:30	21		68				
07:45	128	370	15	32			402	19:45	19	84	44	263			347
08:00	73		14					20:00	19		51				
08:15	84		9					20:15	27		104				
08:30	113		24					20:30	15		76				
08:45	155	425	28	75			500	20:45	18	79	86	317			396
09:00	65		36					21:00	15		78				
09:15	50		19					21:15	8		32				
09:30	119		19					21:30	15		33				
09:45	128	362	26	100			462	21:45	12	50	76	219			269
10:00	77		77					22:00	10		61				
10:15	58		31					22:15	9		37				
10:30	60		18					22:30	6		26				
10:45	73	268	25	151			419	22:45	6	31	18	142			173
11:00	80		61					23:00	10		20				
11:15	24		72					23:15	6		18				
11:30	43		53					23:30	5		14				
11:45	64	211	56	242			453	23:45	5	26	12	64			90
Total Vol.		1808		710			2518			2042		3455			5497

Daily Totals

NB	SB	Combined	EB	WB
3850	4165	**8015**		

	AM			PM		
Split %	71.8%	28.2%	31.4 %	37.1%	62.9%	68.6 %
Peak Hour	08:00	11:45	11:45	12:30	16:30	16:45
Volume	425	289	583	332	492	781
P.H.F.	0.69	0.67	0.78	0.94	0.78	0.74

Prepared by NDS/ATD

Volumes for: Thursday, March 25, 2010 City: San Diego Project #: 10-4095-001

Location: Marian Way just N/o Linda Vista Rd

AM Period	NB		SB		EB	WB		PM Period	NB		SB		EB	WB	
00:00	3		16					12:00	66		160				
00:15	5		4					12:15	71		162				
00:30	2		10					12:30	44		84				
00:45	2	12	3	33			45	12:45	67	248	83	489			737
01:00	0		7					13:00	55		89				
01:15	1		7					13:15	66		87				
01:30	2		6					13:30	51		63				
01:45	1	4	5	25			29	13:45	78	250	73	312			562
02:00	0		9					14:00	127		83				
02:15	3		0					14:15	111		84				
02:30	2		14					14:30	48		97				
02:45	1	6	1	24			30	14:45	39	325	46	310			635
03:00	0		2					15:00	33		77				
03:15	1		0					15:15	45		67				
03:30	1		2					15:30	65		62				
03:45	1	3	2	6			9	15:45	83	226	141	347			573
04:00	1		0					16:00	37		220				
04:15	2		0					16:15	29		61				
04:30	0		0					16:30	42		82				
04:45	4	7	0	0			7	16:45	38	146	85	448			594
05:00	7		1					17:00	58		103				
05:15	18		0					17:15	100		147				
05:30	7		2					17:30	52		145				
05:45	17	49	2	5			54	17:45	78	288	60	455			743
06:00	20		7					18:00	48		85				
06:15	16		9					18:15	52		65				
06:30	16		7					18:30	45		99				
06:45	48	100	8	31			131	18:45	47	192	145	394			586
07:00	46		8					19:00	36		111				
07:15	111		6					19:15	23		45				
07:30	129		10					19:30	24		43				
07:45	96	382	14	38			420	19:45	23	106	49	248			354
08:00	87		13					20:00	15		76				
08:15	108		17					20:15	16		54				
08:30	132		30					20:30	10		71				
08:45	204	531	25	85			616	20:45	10	51	51	252			303
09:00	170		41					21:00	18		40				
09:15	74		26					21:15	17		57				
09:30	74		39					21:30	20		99				
09:45	75	393	34	140			533	21:45	14	69	51	247			316
10:00	114		33					22:00	13		45				
10:15	128		41					22:15	4		27				
10:30	113		95					22:30	2		12				
10:45	57	412	71	240			652	22:45	3	22	10	94			116
11:00	41		51					23:00	3		18				
11:15	35		27					23:15	6		7				
11:30	56		58					23:30	7		9				
11:45	62	194	98	234			428	23:45	4	20	15	49			69
Total Vol.		2093		861			2954			1943		3645			5588

Daily Totals

NB	SB		EB	WB
4036	4506	Combined		
		8542		

	AM			PM		
Split %	70.9%	29.1%	34.6%	34.8%	65.2%	65.4%
Peak Hour	08:15	11:45	11:45	13:30	15:45	17:00
Volume	614	504	747	367	504	743
P.H.F.	0.75	0.78	0.80	0.75	0.57	0.75

Prepared by NDS/ATD

Volumes for: Friday, March 26, 2010 City: San Diego Project #: 10-4095-001

Location: Marian Way just N/o Linda Vista Rd

AM Period	NB		SB		EB		WB		PM Period	NB		SB		EB		WB	
00:00	1		13						12:00	81		80					
00:15	4		7						12:15	50		155					
00:30	1		3						12:30	50		100					
00:45	2	8	6	29				37	12:45	74	255	62	397				652
01:00	5		5						13:00	61		60					
01:15	3		3						13:15	65		94					
01:30	3		4						13:30	63		82					
01:45	3	14	1	13				27	13:45	55	244	60	296				540
02:00	3		10						14:00	52		68					
02:15	0		1						14:15	38		83					
02:30	0		12						14:30	24		95					
02:45	1	4	4	27				31	14:45	34	148	57	303				451
03:00	1		4						15:00	26		71					
03:15	0		0						15:15	28		56					
03:30	0		0						15:30	25		79					
03:45	0	1	3	7				8	15:45	27	106	68	274				380
04:00	2		1						16:00	23		107					
04:15	0		0						16:15	21		77					
04:30	3		1						16:30	28		96					
04:45	5	10	0	2				12	16:45	24	96	76	356				452
05:00	8		0						17:00	24		90					
05:15	16		1						17:15	35		56					
05:30	5		0						17:30	34		67					
05:45	15	44	4	5				49	17:45	37	130	101	314				444
06:00	24		7						18:00	24		93					
06:15	34		2						18:15	14		51					
06:30	32		7						18:30	19		30					
06:45	48	138	8	24				162	18:45	34	91	42	216				307
07:00	64		13						19:00	24		38					
07:15	84		4						19:15	15		28					
07:30	92		13						19:30	7		39					
07:45	114	354	11	41				395	19:45	14	60	31	136				196
08:00	95		16						20:00	6		16					
08:15	102		9						20:15	10		16					
08:30	149		34						20:30	6		18					
08:45	155	501	27	86				587	20:45	7	29	17	67				96
09:00	56		44						21:00	9		18					
09:15	55		16						21:15	7		12					
09:30	65		30						21:30	7		14					
09:45	89	265	23	113				378	21:45	10	33	7	51				84
10:00	51		67						22:00	7		16					
10:15	32		39						22:15	7		15					
10:30	45		15						22:30	4		6					
10:45	68	196	13	134				330	22:45	3	21	8	45				66
11:00	70		71						23:00	1		18					
11:15	27		100						23:15	4		7					
11:30	33		52						23:30	2		6					
11:45	55	185	53	276				461	23:45	5	12	4	35				47
Total Vol.		1720		757				2477			1225		2490				3715

Daily Totals

NB	SB	Combined
2945	3247	6192

	EB	WB

	AM			PM		
Split %	69.4%	30.6%	40.0%	33.0%	67.0%	60.0%
Peak Hour	08:00	11:45	11:45	12:45	12:00	12:00
Volume	501	388	624	263	397	652
P.H.F.	0.81	0.63	0.76	0.90	0.64	0.80

Prepared by NDS/ATD

Volumes for: Monday, March 29, 2010 City: San Diego Project #: 10-4095-001

Location: Marian Way just N/o Linda Vista Rd

AM Period	NB		SB		EB		WB		PM Period	NB		SB		EB		WB	
00:00	2		14						12:00	83		87					
00:15	2		3						12:15	71		89					
00:30	1		9						12:30	85		63					
00:45	1	6	6	32				38	12:45	108	347	49	288				635
01:00	0		4						13:00	72		71					
01:15	1		3						13:15	64		92					
01:30	0		3						13:30	64		50					
01:45	1	2	9	19				21	13:45	74	274	46	259				533
02:00	1		2						14:00	126		59					
02:15	0		0						14:15	108		98					
02:30	2		6						14:30	44		99					
02:45	6	9	0	8				17	14:45	34	312	61	317				629
03:00	1		2						15:00	38		94					
03:15	0		1						15:15	57		82					
03:30	1		1						15:30	75		120					
03:45	0	2	0	4				6	15:45	70	240	105	401				641
04:00	0		1						16:00	29		174					
04:15	0		1						16:15	38		48					
04:30	2		6						16:30	35		88					
04:45	0	2	1	9				11	16:45	49	151	61	371				522
05:00	12		1						17:00	85		122					
05:15	13		1						17:15	120		142					
05:30	9		1						17:30	84		158					
05:45	13	47	1	4				51	17:45	64	353	72	494				847
06:00	19		2						18:00	34		69					
06:15	13		2						18:15	35		64					
06:30	21		12						18:30	62		78					
06:45	61	114	5	21				135	18:45	91	222	140	351				573
07:00	39		5						19:00	34		112					
07:15	73		6						19:15	23		84					
07:30	96		10						19:30	16		80					
07:45	117	325	12	33				358	19:45	15	88	88	364				452
08:00	72		15						20:00	29		111					
08:15	94		12						20:15	13		92					
08:30	104		23						20:30	13		60					
08:45	134	404	27	77				481	20:45	18	73	84	347				420
09:00	63		40						21:00	11		95					
09:15	73		8						21:15	20		43					
09:30	87		13						21:30	19		88					
09:45	130	353	18	79				432	21:45	8	58	51	277				335
10:00	88		69						22:00	5		40					
10:15	46		25						22:15	9		23					
10:30	61		31						22:30	9		16					
10:45	89	284	22	147				431	22:45	6	29	25	104				133
11:00	69		55						23:00	2		20					
11:15	54		53						23:15	2		16					
11:30	66		47						23:30	3		15					
11:45	84	273	60	215				488	23:45	7	14	19	70				84
Total Vol.		1821		648				2469			2161		3643				5804

Daily Totals

NB	SB		EB	WB
3982	4291	Combined		
		8273		

	AM			PM		
Split %	73.8%	26.2%	29.8%	37.2%	62.8%	70.2%
Peak Hour	08:00	11:45	11:45	13:30	17:00	17:00
Volume	404	299	622	372	494	847
P.H.F.	0.75	0.84	0.91	0.77	0.78	0.81

Prepared by NDS/ATD

Volumes for: Tuesday, March 30, 2010 City: San Diego Project #: 10-4095-001

Location: Marian Way just N/o Linda Vista Rd

AM Period	NB		SB		EB	WB		PM Period	NB		SB		EB	WB	
00:00	5		10					12:00	68		178				
00:15	1		18					12:15	54		130				
00:30	2		9					12:30	66		85				
00:45	1	9	9	46			55	12:45	80	268	61	454			722
01:00	1		4					13:00	80		75				
01:15	0		4					13:15	76		52				
01:30	1		6					13:30	75		49				
01:45	2	4	8	22			26	13:45	119	350	46	222			572
02:00	3		9					14:00	116		67				
02:15	4		1					14:15	117		80				
02:30	1		12					14:30	52		82				
02:45	0	8	2	24			32	14:45	38	323	46	275			598
03:00	0		0					15:00	31		84				
03:15	0		0					15:15	62		54				
03:30	0		1					15:30	75		77				
03:45	2	2	1	2			4	15:45	86	254	128	343			597
04:00	0		1					16:00	37		177				
04:15	0		1					16:15	34		91				
04:30	3		0					16:30	29		124				
04:45	5	8	3	5			13	16:45	35	135	111	503			638
05:00	12		1					17:00	62		128				
05:15	20		3					17:15	94		146				
05:30	13		3					17:30	87		159				
05:45	10	55	3	10			65	17:45	62	305	69	502			807
06:00	20		6					18:00	55		78				
06:15	14		6					18:15	50		56				
06:30	24		3					18:30	34		87				
06:45	37	95	9	24			119	18:45	64	203	138	359			562
07:00	70		6					19:00	31		113				
07:15	102		6					19:15	29		76				
07:30	123		8					19:30	23		62				
07:45	95	390	12	32			422	19:45	19	102	44	295			397
08:00	75		7					20:00	14		52				
08:15	101		14					20:15	20		46				
08:30	128		28					20:30	15		81				
08:45	211	515	20	69			584	20:45	16	65	92	271			336
09:00	150		53					21:00	14		85				
09:15	69		30					21:15	9		90				
09:30	83		34					21:30	9		53				
09:45	68	370	31	148			518	21:45	17	49	29	257			306
10:00	95		16					22:00	12		43				
10:15	112		31					22:15	8		24				
10:30	97		88					22:30	9		27				
10:45	42	346	86	221			567	22:45	6	35	12	106			141
11:00	44		39					23:00	7		15				
11:15	40		43					23:15	6		13				
11:30	46		49					23:30	3		14				
11:45	68	198	72	203			401	23:45	2	18	11	53			71
Total Vol.		2000		806			2806			2107		3640			5747

Daily Totals

NB	SB	Combined	EB	WB
4107	4446	**8553**		

	AM			PM		
Split %	71.3%	28.7%	32.8 %	36.7%	63.3%	67.2 %
Peak Hour	08:15	11:45	11:45	13:30	16:45	16:45
Volume	590	465	721	427	544	822
P.H.F.	0.70	0.65	0.73	0.89	0.86	0.84

Prepared by NDS/ATD

Volumes for: Wednesday, March 31, 2010 City: San Diego Project #: 10-4095-001

Location: Marian Way just N/o Linda Vista Rd

AM Period	NB		SB		EB	WB		PM Period	NB		SB		EB	WB	
00:00	2		6					12:00	81		68				
00:15	1		10					12:15	60		94				
00:30	2		9					12:30	72		64				
00:45	1	6	4	29			35	12:45	62	275	57	283			558
01:00	4		6					13:00	80		79				
01:15	1		7					13:15	46		65				
01:30	0		2					13:30	62		60				
01:45	0	5	8	23			28	13:45	79	267	62	266			533
02:00	11		9					14:00	114		91				
02:15	3		3					14:15	108		97				
02:30	2		11					14:30	45		97				
02:45	0	16	2	25			41	14:45	46	313	70	355			668
03:00	0		0					15:00	28		84				
03:15	0		1					15:15	82		94				
03:30	1		0					15:30	64		103				
03:45	2	3	2	3			6	15:45	69	243	111	392			635
04:00	0		0					16:00	40		154				
04:15	1		1					16:15	31		62				
04:30	2		0					16:30	28		85				
04:45	2	5	0	1			6	16:45	56	155	83	384			539
05:00	9		1					17:00	72		138				
05:15	9		2					17:15	102		129				
05:30	8		2					17:30	69		137				
05:45	13	39	2	7			46	17:45	77	320	75	479			799
06:00	19		4					18:00	27		73				
06:15	11		8					18:15	37		94				
06:30	20		8					18:30	35		86				
06:45	39	89	2	22			111	18:45	45	144	108	361			505
07:00	55		4					19:00	23		87				
07:15	80		5					19:15	22		53				
07:30	99		6					19:30	17		68				
07:45	129	363	6	21			384	19:45	15	77	38	246			323
08:00	81		13					20:00	12		58				
08:15	89		8					20:15	11		58				
08:30	117		24					20:30	5		40				
08:45	145	432	34	79			511	20:45	12	40	103	259			299
09:00	74		43					21:00	6		36				
09:15	58		27					21:15	7		33				
09:30	83		40					21:30	7		26				
09:45	116	331	34	144			475	21:45	3	23	48	143			166
10:00	68		76					22:00	8		53				
10:15	51		34					22:15	7		27				
10:30	43		26					22:30	4		6				
10:45	75	237	28	164			401	22:45	2	21	6	92			113
11:00	74		87					23:00	3		14				
11:15	38		85					23:15	3		5				
11:30	46		58					23:30	1		2				
11:45	54	212	65	295			507	23:45	0	7	1	22			29
Total Vol.		1738		813			2551			1885		3282			5167

Daily Totals

NB	SB		EB	WB
3623	4095	Combined		
		7718		

	AM			PM		
Split %	68.1%	31.9%	33.1%	36.5%	63.5%	66.9%
Peak Hour	08:00	11:00	11:45	13:30	16:45	17:00
Volume	432	295	558	363	487	799
P.H.F.	0.74	0.85	0.91	0.81	0.88	0.86

Prepared by NDS/ATD

Volumes for: Thursday, March 18, 2010 City: San Diego Project #: 10-4095-002

Location: Alcala Park Way just N/o Linda Vista Rd

AM Period	NB		SB		EB	WB		PM Period	NB		SB		EB	WB	
00:00	11		15					12:00	97		128				
00:15	16		12					12:15	89		106				
00:30	15		14					12:30	75		111				
00:45	21	63	16	57			120	12:45	91	352	87	432			784
01:00	10		8					13:00	79		66				
01:15	17		5					13:15	70		75				
01:30	19		12					13:30	102		80				
01:45	1	47	7	32			79	13:45	108	359	79	300			659
02:00	8		4					14:00	113		150				
02:15	8		4					14:15	138		114				
02:30	6		4					14:30	56		81				
02:45	2	24	1	13			37	14:45	53	360	76	421			781
03:00	1		2					15:00	60		74				
03:15	2		3					15:15	62		47				
03:30	1		0					15:30	106		65				
03:45	3	7	1	6			13	15:45	102	330	155	341			671
04:00	1		5					16:00	91		154				
04:15	0		1					16:15	76		94				
04:30	3		3					16:30	86		121				
04:45	7	11	0	9			20	16:45	94	347	116	485			832
05:00	11		4					17:00	105		132				
05:15	8		8					17:15	144		156				
05:30	10		6					17:30	96		153				
05:45	14	43	3	21			64	17:45	106	451	92	533			984
06:00	22		1					18:00	96		86				
06:15	22		13					18:15	78		81				
06:30	19		3					18:30	93		61				
06:45	57	120	9	26			146	18:45	98	365	135	363			728
07:00	52		6					19:00	105		124				
07:15	103		9					19:15	89		179				
07:30	130		15					19:30	76		91				
07:45	157	442	18	48			490	19:45	79	349	92	486			835
08:00	107		20					20:00	55		110				
08:15	100		30					20:15	43		116				
08:30	181		34					20:30	50		86				
08:45	207	595	47	131			726	20:45	57	205	95	407			612
09:00	158		39					21:00	35		84				
09:15	81		23					21:15	34		92				
09:30	89		29					21:30	48		86				
09:45	89	417	41	132			549	21:45	47	164	57	319			483
10:00	94		40					22:00	47		76				
10:15	86		80					22:15	23		45				
10:30	86		75					22:30	35		40				
10:45	47	313	63	258			571	22:45	18	123	34	195			318
11:00	52		51					23:00	19		41				
11:15	44		40					23:15	25		39				
11:30	64		76					23:30	19		35				
11:45	83	243	118	285			528	23:45	19	82	32	147			229
Total Vol.		2325		1018			3343			3487		4429			7916

Daily Totals

NB	SB		EB	WB
5812	5447	Combined		
		11259		

	AM			PM		
Split %	69.5%	30.5%	29.7%	44.1%	55.9%	70.3%
Peak Hour	08:15	11:45	11:45	13:30	16:45	16:45
Volume	646	463	807	461	557	996
P.H.F.	0.78	0.90	0.90	0.96	0.89	0.83

Prepared by NDS/ATD

Volumes for: Friday, March 19, 2010 City: San Diego Project #: 10-4095-002

Location: Alcala Park Way just N/o Linda Vista Rd

AM Period	NB		SB		EB	WB		PM Period	NB		SB		EB	WB	
00:00	13		21					12:00	97		127				
00:15	15		27					12:15	74		125				
00:30	11		19					12:30	88		103				
00:45	11	50	10	77			127	12:45	101	360	94	449			809
01:00	3		11					13:00	128		99				
01:15	7		9					13:15	132		133				
01:30	10		2					13:30	141		103				
01:45	6	26	11	33			59	13:45	115	516	89	424			940
02:00	11		7					14:00	110		93				
02:15	6		6					14:15	86		116				
02:30	3		5					14:30	74		101				
02:45	4	24	3	21			45	14:45	70	340	106	416			756
03:00	1		2					15:00	76		83				
03:15	3		0					15:15	77		81				
03:30	1		0					15:30	64		106				
03:45	1	6	2	4			10	15:45	67	284	101	371			655
04:00	1		6					16:00	68		120				
04:15	7		0					16:15	77		130				
04:30	0		6					16:30	82		172				
04:45	4	12	4	16			28	16:45	89	316	174	596			912
05:00	9		0					17:00	79		191				
05:15	7		0					17:15	100		122				
05:30	13		17					17:30	89		96				
05:45	40	69	21	38			107	17:45	90	358	81	490			848
06:00	17		6					18:00	75		82				
06:15	9		2					18:15	74		80				
06:30	22		12					18:30	82		86				
06:45	41	89	11	31			120	18:45	95	326	73	321			647
07:00	39		6					19:00	105		79				
07:15	59		11					19:15	74		64				
07:30	99		14					19:30	53		74				
07:45	158	355	29	60			415	19:45	36	268	55	272			540
08:00	107		26					20:00	46		31				
08:15	108		11					20:15	51		49				
08:30	148		31					20:30	42		37				
08:45	151	514	31	99			613	20:45	27	166	51	168			334
09:00	106		48					21:00	44		97				
09:15	77		33					21:15	29		61				
09:30	80		31					21:30	27		60				
09:45	111	374	28	140			514	21:45	37	137	131	349			486
10:00	85		73					22:00	41		70				
10:15	58		43					22:15	25		49				
10:30	58		48					22:30	26		28				
10:45	76	277	44	208			485	22:45	32	124	41	188			312
11:00	67		76					23:00	24		39				
11:15	84		66					23:15	34		42				
11:30	69		80					23:30	15		31				
11:45	98	318	111	333			651	23:45	15	88	20	132			220
Total Vol.		2114		1060			3174			3283		4176			7459

Daily Totals

NB	SB		EB	WB
5397	5236	Combined		
		10633		

	AM			PM		
Split %	66.6%	33.4%	29.9%	44.0%	56.0%	70.1%
Peak Hour	07:45	11:45	11:45	13:00	16:15	16:30
Volume	521	466	823	516	667	1009
P.H.F.	0.82	0.92	0.92	0.96	0.87	0.93

Prepared by NDS/ATD

Volumes for: Monday, March 22, 2010 City: San Diego Project #: 10-4095-002

Location: Alcala Park Way just N/o Linda Vista Rd

AM Period	NB		SB		EB	WB		PM Period	NB		SB		EB	WB	
00:00	6		18					12:00	107		71				
00:15	10		11					12:15	98		81				
00:30	4		5					12:30	116		77				
00:45	3	23	3	37			60	12:45	107	428	67	296			724
01:00	2		1					13:00	92		47				
01:15	0		2					13:15	86		83				
01:30	4		2					13:30	105		59				
01:45	3	9	7	12			21	13:45	128	411	67	256			667
02:00	3		3					14:00	144		97				
02:15	3		0					14:15	151		120				
02:30	5		5					14:30	85		95				
02:45	0	11	0	8			19	14:45	80	460	89	401			861
03:00	1		0					15:00	92		73				
03:15	1		5					15:15	76		63				
03:30	2		1					15:30	105		71				
03:45	1	5	0	6			11	15:45	120	393	112	319			712
04:00	2		2					16:00	78		122				
04:15	3		1					16:15	87		88				
04:30	8		0					16:30	116		124				
04:45	5	18	2	5			23	16:45	156	437	89	423			860
05:00	7		2					17:00	193		176				
05:15	9		5					17:15	173		132				
05:30	24		5					17:30	129		131				
05:45	26	66	11	23			89	17:45	162	657	97	536			1193
06:00	14		6					18:00	78		81				
06:15	8		3					18:15	61		52				
06:30	26		11					18:30	105		65				
06:45	36	84	9	29			113	18:45	158	402	139	337			739
07:00	41		7					19:00	104		180				
07:15	70		9					19:15	168		142				
07:30	127		11					19:30	90		134				
07:45	191	429	22	49			478	19:45	69	431	64	520			951
08:00	165		17					20:00	68		82				
08:15	147		21					20:15	60		117				
08:30	160		39					20:30	62		101				
08:45	160	632	34	111			743	20:45	70	260	202	502			762
09:00	120		32					21:00	40		106				
09:15	71		26					21:15	51		48				
09:30	92		33					21:30	31		44				
09:45	89	372	39	130			502	21:45	36	158	65	263			421
10:00	102		62					22:00	47		95				
10:15	86		52					22:15	33		41				
10:30	77		35					22:30	28		28				
10:45	70	335	32	181			516	22:45	40	148	59	223			371
11:00	63		54					23:00	21		58				
11:15	58		42					23:15	20		41				
11:30	96		50					23:30	18		21				
11:45	107	324	64	210			534	23:45	19	78	29	149			227
Total Vol.		2308		801			3109			4263		4225			8488

Daily Totals

NB	SB	Combined
6571	5026	**11597**

	AM			PM		
Split %	74.2%	25.8%	26.8 %	50.2%	49.8%	73.2 %
Peak Hour	07:45	11:45	07:45	17:00	18:45	17:00
Volume	663	293	762	657	595	1193
P.H.F.	0.87	0.90	0.89	0.81	0.83	0.81

Prepared by NDS/ATD

Volumes for: Tuesday, March 23, 2010 City: San Diego Project #: 10-4095-002

Location: Alcala Park Way just N/o Linda Vista Rd

AM Period	NB		SB		EB	WB		PM Period	NB		SB		EB	WB	
00:00	20		25					12:00	131		116				
00:15	8		4					12:15	116		105				
00:30	10		5					12:30	131		83				
00:45	10	48	8	42			90	12:45	97	475	57	361			836
01:00	17		16					13:00	76		69				
01:15	8		5					13:15	91		66				
01:30	4		6					13:30	93		57				
01:45	6	35	7	34			69	13:45	104	364	71	263			627
02:00	4		8					14:00	118		88				
02:15	4		1					14:15	135		108				
02:30	2		1					14:30	75		86				
02:45	0	10	3	13			23	14:45	57	385	49	331			716
03:00	1		2					15:00	68		54				
03:15	0		0					15:15	73		50				
03:30	5		0					15:30	104		54				
03:45	4	10	1	3			13	15:45	103	348	108	266			614
04:00	3		3					16:00	94		170				
04:15	3		0					16:15	63		132				
04:30	2		0					16:30	67		117				
04:45	8	16	0	3			19	16:45	89	313	104	523			836
05:00	28		2					17:00	112		173				
05:15	43		3					17:15	141		174				
05:30	35		4					17:30	96		144				
05:45	25	131	5	14			145	17:45	90	439	85	576			1015
06:00	22		3					18:00	61		70				
06:15	34		14					18:15	56		107				
06:30	37		8					18:30	76		110				
06:45	64	157	8	33			190	18:45	152	345	141	428			773
07:00	75		14					19:00	90		113				
07:15	138		15					19:15	91		166				
07:30	203		22					19:30	45		84				
07:45	227	643	19	70			713	19:45	71	297	76	439			736
08:00	162		18					20:00	46		102				
08:15	161		21					20:15	65		68				
08:30	205		43					20:30	51		81				
08:45	176	704	35	117			821	20:45	50	212	112	363			575
09:00	177		46					21:00	34		94				
09:15	91		28					21:15	44		85				
09:30	111		30					21:30	35		66				
09:45	85	464	41	145			609	21:45	39	152	63	308			460
10:00	73		36					22:00	57		91				
10:15	120		55					22:15	28		48				
10:30	102		64					22:30	18		36				
10:45	65	360	70	225			585	22:45	23	126	35	210			336
11:00	54		33					23:00	24		29				
11:15	75		41					23:15	16		26				
11:30	82		62					23:30	13		11				
11:45	100	311	84	220			531	23:45	5	58	20	86			144
Total Vol.		2889		919			3808			3514		4154			7668

Daily Totals

NB	SB		EB	WB
6403	5073	Combined		
		11476		

	AM			PM		
Split %	75.9%	24.1%	33.2 %	45.8%	54.2%	66.8 %
Peak Hour	07:45	11:45	11:45	12:00	16:45	16:45
Volume	755	388	866	475	595	1033
P.H.F.	0.83	0.84	0.88	0.97	0.85	0.82

Prepared by NDS/ATD

Volumes for: Wednesday, March 24, 2010 City: San Diego Project #: 10-4095-002

Location: Alcala Park Way just N/o Linda Vista Rd

AM Period	NB		SB		EB	WB		PM Period	NB		SB		EB	WB	
00:00	11		17					12:00	98		70				
00:15	4		6					12:15	90		86				
00:30	4		9					12:30	99		76				
00:45	6	25	6	38			63	12:45	84	371	65	297			668
01:00	2		5					13:00	90		62				
01:15	4		3					13:15	70		71				
01:30	4		11					13:30	81		67				
01:45	4	14	5	24			38	13:45	91	332	39	239			571
02:00	8		5					14:00	113		95				
02:15	4		1					14:15	107		124				
02:30	5		2					14:30	67		89				
02:45	2	19	3	11			30	14:45	82	369	65	373			742
03:00	3		1					15:00	70		80				
03:15	0		1					15:15	63		63				
03:30	0		0					15:30	93		84				
03:45	0	3	0	2			5	15:45	110	336	143	370			706
04:00	1		1					16:00	100		116				
04:15	3		2					16:15	89		93				
04:30	1		0					16:30	80		144				
04:45	1	6	0	3			9	16:45	100	369	70	423			792
05:00	7		0					17:00	146		167				
05:15	4		4					17:15	167		136				
05:30	20		6					17:30	98		108				
05:45	35	66	7	17			83	17:45	102	513	113	524			1037
06:00	18		3					18:00	83		81				
06:15	16		4					18:15	65		76				
06:30	26		7					18:30	107		108				
06:45	42	102	2	16			118	18:45	141	396	162	427			823
07:00	51		6					19:00	113		136				
07:15	73		12					19:15	93		143				
07:30	137		13					19:30	67		146				
07:45	228	489	13	44			533	19:45	72	345	65	490			835
08:00	163		24					20:00	63		83				
08:15	177		25					20:15	58		116				
08:30	150		29					20:30	71		119				
08:45	184	674	33	111			785	20:45	63	255	174	492			747
09:00	124		49					21:00	60		116				
09:15	70		17					21:15	27		66				
09:30	115		39					21:30	32		46				
09:45	126	435	44	149			584	21:45	31	150	52	280			430
10:00	85		65					22:00	38		67				
10:15	83		60					22:15	16		38				
10:30	61		45					22:30	18		43				
10:45	81	310	30	200			510	22:45	27	99	27	175			274
11:00	75		51					23:00	27		73				
11:15	71		74					23:15	24		48				
11:30	69		78					23:30	10		52				
11:45	91	306	71	274			580	23:45	17	78	29	202			280
Total Vol.		2449		889			3338			3613		4292			7905

Daily Totals

NB	SB		EB	WB
6062	5181	Combined		
		11243		

	AM			PM		
Split %	73.4%	26.6%	29.7%	45.7%	54.3%	70.3%
Peak Hour	07:45	11:30	07:45	17:00	18:45	17:00
Volume	718	305	809	513	587	1037
P.H.F.	0.79	0.89	0.84	0.76	0.91	0.83

Prepared by NDS/ATD

Volumes for: Thursday, March 25, 2010 City: San Diego Project #: 10-4095-002

Location: Alcala Park Way just N/o Linda Vista Rd

AM Period	NB		SB		EB	WB		PM Period	NB		SB		EB	WB	
00:00	14		25					12:00	88		122				
00:15	13		14					12:15	107		101				
00:30	8		7					12:30	96		117				
00:45	13	48	6	52			100	12:45	92	383	75	415			798
01:00	6		6					13:00	92		63				
01:15	0		6					13:15	116		78				
01:30	3		3					13:30	114		75				
01:45	2	11	8	23			34	13:45	128	450	71	287			737
02:00	4		4					14:00	150		136				
02:15	3		9					14:15	137		119				
02:30	3		2					14:30	68		83				
02:45	3	13	0	15			28	14:45	78	433	66	404			837
03:00	0		1					15:00	73		66				
03:15	2		0					15:15	63		50				
03:30	0		0					15:30	107		73				
03:45	2	4	0	1			5	15:45	110	353	144	333			686
04:00	1		1					16:00	63		170				
04:15	3		3					16:15	69		110				
04:30	1		0					16:30	75		123				
04:45	8	13	1	5			18	16:45	123	330	101	504			834
05:00	17		3					17:00	146		149				
05:15	8		4					17:15	161		171				
05:30	10		18					17:30	97		144				
05:45	14	49	4	29			78	17:45	114	518	88	552			1070
06:00	34		3					18:00	76		90				
06:15	25		11					18:15	59		79				
06:30	26		4					18:30	91		65				
06:45	58	143	9	27			170	18:45	126	352	140	374			726
07:00	59		8					19:00	123		130				
07:15	103		9					19:15	91		164				
07:30	158		21					19:30	75		107				
07:45	173	493	21	59			552	19:45	78	367	85	486			853
08:00	138		16					20:00	67		113				
08:15	153		23					20:15	59		126				
08:30	173		37					20:30	45		96				
08:45	210	674	48	124			798	20:45	59	230	94	429			659
09:00	172		36					21:00	47		82				
09:15	89		29					21:15	43		87				
09:30	92		27					21:30	37		87				
09:45	94	447	47	139			586	21:45	36	163	64	320			483
10:00	85		44					22:00	30		67				
10:15	124		70					22:15	29		47				
10:30	112		85					22:30	23		37				
10:45	79	400	66	265			665	22:45	17	99	35	186			285
11:00	58		52					23:00	24		48				
11:15	87		36					23:15	10		40				
11:30	88		69					23:30	9		38				
11:45	98	331	121	278			609	23:45	12	55	28	154			209
Total Vol.		2626		1017			3643			3733		4444			8177

Daily Totals

NB	SB	Combined	EB	WB
6359	5461	11820		

	AM			PM		
Split %	72.1%	27.9%	30.8%	45.7%	54.3%	69.2%
Peak Hour	08:15	11:45	08:15	13:30	16:45	16:45
Volume	708	461	852	529	565	1092
P.H.F.	0.84	0.94	0.83	0.90	0.83	0.82

Prepared by NDS/ATD

Volumes for: Friday, March 26, 2010 City: San Diego Project #: 10-4095-002

Location: Alcala Park Way just N/o Linda Vista Rd

AM Period	NB		SB		EB	WB		PM Period	NB		SB		EB	WB	
00:00	16		19					12:00	119		91				
00:15	10		23					12:15	108		142				
00:30	9		15					12:30	84		103				
00:45	11	46	9	66			112	12:45	98	409	72	408			817
01:00	18		15					13:00	109		79				
01:15	14		10					13:15	98		131				
01:30	13		2					13:30	97		117				
01:45	5	50	11	38			88	13:45	103	407	86	413			820
02:00	9		6					14:00	81		115				
02:15	16		7					14:15	91		104				
02:30	11		4					14:30	88		111				
02:45	3	39	3	20			59	14:45	61	321	118	448			769
03:00	2		2					15:00	62		85				
03:15	0		1					15:15	66		90				
03:30	3		0					15:30	77		91				
03:45	2	7	1	4			11	15:45	79	284	108	374			658
04:00	4		4					16:00	87		106				
04:15	2		0					16:15	66		97				
04:30	3		4					16:30	76		127				
04:45	1	10	2	10			20	16:45	97	326	90	420			746
05:00	4		0					17:00	96		140				
05:15	7		1					17:15	80		92				
05:30	33		15					17:30	89		75				
05:45	30	74	18	34			108	17:45	74	339	81	388			727
06:00	12		3					18:00	61		67				
06:15	6		2					18:15	69		67				
06:30	26		14					18:30	72		55				
06:45	40	84	9	28			112	18:45	119	321	66	255			576
07:00	39		8					19:00	117		57				
07:15	57		14					19:15	122		53				
07:30	131		11					19:30	98		70				
07:45	149	376	25	58			434	19:45	64	401	75	255			656
08:00	114		21					20:00	44		49				
08:15	113		13					20:15	45		41				
08:30	147		36					20:30	29		54				
08:45	188	562	34	104			666	20:45	47	165	165	309			474
09:00	110		50					21:00	46		159				
09:15	56		36					21:15	32		67				
09:30	73		24					21:30	34		55				
09:45	102	341	25	135			476	21:45	29	141	47	328			469
10:00	82		75					22:00	32		45				
10:15	70		45					22:15	51		68				
10:30	71		51					22:30	28		52				
10:45	66	289	39	210			499	22:45	37	148	55	220			368
11:00	97		78					23:00	22		49				
11:15	68		70					23:15	39		38				
11:30	100		68					23:30	19		34				
11:45	102	367	115	331			698	23:45	20	100	19	140			240
Total Vol.		2245		1038			3283			3362		3958			7320

Daily Totals

NB	SB	Combined	EB	WB
5607	4996	**10603**		

	AM			PM		
Split %	68.4%	31.6%	31.0%	45.9%	54.1%	69.0%
Peak Hour	08:00	11:45	11:45	18:45	16:15	13:15
Volume	562	451	864	456	454	828
P.H.F.	0.75	0.79	0.86	0.98	0.81	0.90

Prepared by NDS/ATD

Volumes for: Monday, March 29, 2010 City: San Diego Project #: 10-4095-002

Location: Alcala Park Way just N/o Linda Vista Rd

AM Period	NB		SB		EB	WB		PM Period	NB		SB		EB	WB	
00:00	7		16					12:00	96		85				
00:15	5		13					12:15	88		99				
00:30	4		6					12:30	104		56				
00:45	6	22	2	37			59	12:45	88	376	63	303			679
01:00	2		2					13:00	93		65				
01:15	2		2					13:15	87		58				
01:30	1		2					13:30	75		49				
01:45	6	11	3	9			20	13:45	90	345	57	229			574
02:00	2		3					14:00	114		79				
02:15	1		1					14:15	132		138				
02:30	5		0					14:30	82		91				
02:45	1	9	0	4			13	14:45	68	396	61	369			765
03:00	0		0					15:00	61		79				
03:15	1		0					15:15	60		60				
03:30	1		2					15:30	82		61				
03:45	3	5	0	2			7	15:45	91	294	90	290			584
04:00	1		2					16:00	58		104				
04:15	3		1					16:15	71		106				
04:30	6		0					16:30	73		120				
04:45	7	17	0	3			20	16:45	112	314	81	411			725
05:00	5		1					17:00	145		152				
05:15	9		5					17:15	154		149				
05:30	15		3					17:30	94		121				
05:45	33	62	6	15			77	17:45	147	540	83	505			1045
06:00	16		7					18:00	56		82				
06:15	21		3					18:15	57		66				
06:30	25		5					18:30	75		97				
06:45	39	101	9	24			125	18:45	106	294	149	394			688
07:00	61		9					19:00	59		173				
07:15	80		19					19:15	73		137				
07:30	138		20					19:30	53		151				
07:45	205	484	23	71			555	19:45	73	258	98	559			817
08:00	123		19					20:00	59		93				
08:15	136		11					20:15	45		64				
08:30	136		33					20:30	51		115				
08:45	167	562	27	90			652	20:45	54	209	148	420			629
09:00	139		38					21:00	43		88				
09:15	83		22					21:15	31		54				
09:30	100		45					21:30	40		54				
09:45	103	425	31	136			561	21:45	33	147	50	246			393
10:00	86		63					22:00	25		56				
10:15	71		42					22:15	18		45				
10:30	71		49					22:30	28		49				
10:45	75	303	31	185			488	22:45	20	91	31	181			272
11:00	72		62					23:00	22		36				
11:15	75		67					23:15	13		19				
11:30	74		59					23:30	10		21				
11:45	84	305	61	249			554	23:45	13	58	31	107			165
Total Vol.		2306		825			3131			3322		4014			7336

Daily Totals

NB	SB	Combined
5628	4839	**10467**

	AM			PM		
Split %	73.7%	26.3%	29.9%	45.3%	54.7%	70.1%
Peak Hour	07:30	11:30	08:15	17:00	18:45	17:00
Volume	602	304	687	540	610	1045
P.H.F.	0.73	0.77	0.89	0.79	0.88	0.86

Prepared by NDS/ATD

Volumes for: Tuesday, March 30, 2010 City: San Diego Project #: 10-4095-002

Location: Alcala Park Way just N/o Linda Vista Rd

AM Period	NB		SB		EB	WB		PM Period	NB		SB		EB	WB	
00:00	14		24					12:00	93		122				
00:15	9		9					12:15	93		130				
00:30	7		5					12:30	84		91				
00:45	2	32	6	44			76	12:45	71	341	76	419			760
01:00	4		3					13:00	90		74				
01:15	5		3					13:15	89		72				
01:30	8		1					13:30	87		59				
01:45	4	21	7	14			35	13:45	96	362	43	248			610
02:00	1		4					14:00	154		74				
02:15	3		2					14:15	133		107				
02:30	1		2					14:30	57		90				
02:45	2	7	0	8			15	14:45	44	388	56	327			715
03:00	1		1					15:00	66		56				
03:15	1		0					15:15	56		57				
03:30	0		0					15:30	100		62				
03:45	1	3	0	1			4	15:45	118	340	141	316			656
04:00	4		0					16:00	54		143				
04:15	1		2					16:15	74		108				
04:30	0		1					16:30	73		100				
04:45	4	9	0	3			12	16:45	87	288	72	423			711
05:00	14		1					17:00	122		192				
05:15	33		4					17:15	141		172				
05:30	15		0					17:30	95		137				
05:45	24	86	3	8			94	17:45	107	465	101	602			1067
06:00	26		4					18:00	70		82				
06:15	19		3					18:15	61		68				
06:30	33		3					18:30	68		101				
06:45	66	144	12	22			166	18:45	105	304	141	392			696
07:00	75		12					19:00	72		101				
07:15	95		25					19:15	72		176				
07:30	146		22					19:30	63		99				
07:45	178	494	15	74			568	19:45	67	274	86	462			736
08:00	126		21					20:00	56		79				
08:15	159		19					20:15	40		61				
08:30	166		38					20:30	46		79				
08:45	196	647	28	106			753	20:45	51	193	78	297			490
09:00	145		39					21:00	40		92				
09:15	96		23					21:15	41		78				
09:30	92		39					21:30	30		54				
09:45	85	418	37	138			556	21:45	33	144	46	270			414
10:00	61		47					22:00	37		48				
10:15	91		61					22:15	25		32				
10:30	84		66					22:30	20		30				
10:45	62	298	69	243			541	22:45	22	104	33	143			247
11:00	45		57					23:00	20		41				
11:15	52		45					23:15	26		26				
11:30	76		62					23:30	13		36				
11:45	97	270	98	262			532	23:45	17	76	26	129			205
Total Vol.		2429		923			3352			3279		4028			7307

Daily Totals

NB	SB	Combined	EB	WB
5708	4951	10659		

	AM			PM		
Split %	72.5%	27.5%	31.4 %	44.9%	55.1%	68.6 %
Peak Hour	08:15	11:45	11:45	13:30	17:00	17:00
Volume	666	441	808	470	602	1067
P.H.F.	0.85	0.85	0.91	0.80	0.78	0.85

Prepared by NDS/ATD

Volumes for: Wednesday, March 31, 2010 City: San Diego Project #: 10-4095-002

Location: Alcala Park Way just N/o Linda Vista Rd

AM Period	NB		SB		EB	WB		PM Period	NB		SB		EB	WB	
00:00	8		22					12:00	93		92				
00:15	10		8					12:15	101		94				
00:30	7		8					12:30	131		66				
00:45	4	29	8	46			75	12:45	109	434	89	341			775
01:00	8		9					13:00	96		95				
01:15	7		5					13:15	80		91				
01:30	6		2					13:30	88		74				
01:45	4	25	10	26			51	13:45	82	346	69	329			675
02:00	2		9					14:00	110		87				
02:15	3		3					14:15	101		141				
02:30	10		1					14:30	70		125				
02:45	0	15	0	13			28	14:45	74	355	84	437			792
03:00	1		0					15:00	74		105				
03:15	1		0					15:15	79		75				
03:30	2		0					15:30	95		118				
03:45	0	4	0	0			4	15:45	102	350	123	421			771
04:00	1		2					16:00	97		126				
04:15	4		1					16:15	60		125				
04:30	3		1					16:30	75		139				
04:45	3	11	4	8			19	16:45	100	332	96	486			818
05:00	8		3					17:00	142		170				
05:15	8		9					17:15	166		172				
05:30	18		6					17:30	81		143				
05:45	35	69	7	25			94	17:45	81	470	100	585			1055
06:00	16		8					18:00	72		91				
06:15	24		1					18:15	50		87				
06:30	22		7					18:30	65		86				
06:45	40	102	7	23			125	18:45	76	263	139	403			666
07:00	59		12					19:00	54		129				
07:15	78		14					19:15	62		117				
07:30	152		12					19:30	41		147				
07:45	197	486	33	71			557	19:45	31	188	71	464			652
08:00	144		12					20:00	53		75				
08:15	163		16					20:15	38		71				
08:30	144		39					20:30	36		48				
08:45	156	607	26	93			700	20:45	33	160	150	344			504
09:00	118		35					21:00	26		63				
09:15	78		22					21:15	32		33				
09:30	111		23					21:30	29		27				
09:45	100	407	47	127			534	21:45	28	115	23	146			261
10:00	94		68					22:00	26		29				
10:15	80		59					22:15	22		25				
10:30	53		46					22:30	19		41				
10:45	70	297	37	210			507	22:45	32	99	32	127			226
11:00	69		52					23:00	11		24				
11:15	86		58					23:15	19		15				
11:30	65		83					23:30	4		25				
11:45	94	314	95	288			602	23:45	11	45	6	70			115
Total Vol.		2366		930			3296			3157		4153			7310

Daily Totals

NB	SB	Combined	EB	WB
5523	5083	**10606**		

	AM			PM		
Split %	71.8%	28.2%	31.1%	43.2%	56.8%	68.9%
Peak Hour	07:30	11:30	11:45	16:45	17:00	16:45
Volume	656	364	766	489	585	1070
P.H.F.	0.83	0.96	0.97	0.86	0.85	0.79

Prepared by NDS/ATD

Volumes for: Thursday, March 18, 2010 City: San Diego Project #: 10-4095-003

Location: Alcala Vista Apartments/Sports Ctr Entrance N/o Linda Vista Rd

AM Period	NB		SB		EB	WB		PM Period	NB		SB		EB	WB	
00:00	35		13					12:00	45		31				
00:15	23		7					12:15	68		53				
00:30	40		7					12:30	43		45				
00:45	17	115	10	37			152	12:45	51	207	55	184			391
01:00	15		6					13:00	40		46				
01:15	7		7					13:15	42		24				
01:30	9		1					13:30	50		22				
01:45	12	43	1	15			58	13:45	35	167	26	118			285
02:00	3		2					14:00	45		44				
02:15	5		5					14:15	46		59				
02:30	2		0					14:30	35		26				
02:45	3	13	1	8			21	14:45	20	146	28	157			303
03:00	3		2					15:00	39		28				
03:15	2		0					15:15	27		19				
03:30	5		1					15:30	25		20				
03:45	1	11	1	4			15	15:45	48	139	35	102			241
04:00	1		2					16:00	54		45				
04:15	1		1					16:15	51		44				
04:30	0		1					16:30	57		45				
04:45	0	2	0	4			6	16:45	55	217	34	168			385
05:00	0		5					17:00	56		40				
05:15	6		6					17:15	64		64				
05:30	5		6					17:30	61		49				
05:45	4	15	1	18			33	17:45	47	228	51	204			432
06:00	2		0					18:00	44		41				
06:15	3		0					18:15	35		61				
06:30	10		8					18:30	53		43				
06:45	7	22	6	14			36	18:45	96	228	54	199			427
07:00	17		4					19:00	78		80				
07:15	20		16					19:15	58		66				
07:30	28		13					19:30	71		49				
07:45	28	93	16	49			142	19:45	51	258	50	245			503
08:00	22		9					20:00	53		52				
08:15	28		17					20:15	53		43				
08:30	48		18					20:30	74		38				
08:45	42	140	33	77			217	20:45	90	270	48	181			451
09:00	41		26					21:00	62		50				
09:15	14		17					21:15	56		44				
09:30	23		12					21:30	35		33				
09:45	24	102	12	67			169	21:45	35	188	28	155			343
10:00	27		10					22:00	40		55				
10:15	40		18					22:15	34		23				
10:30	28		40					22:30	42		25				
10:45	30	125	31	99			224	22:45	36	152	26	129			281
11:00	21		19					23:00	30		25				
11:15	22		36					23:15	36		17				
11:30	27		32					23:30	40		20				
11:45	28	98	30	117			215	23:45	38	144	6	68			212
Total Vol.		779		509			1288			2344		1910			4254

Daily Totals

NB	SB	Combined
3123	2419	5542

	AM			PM		
Split %	60.5%	39.5%	23.2%	55.1%	44.9%	76.8%
Peak Hour	11:45	11:45	11:45	18:45	18:45	18:45
Volume	184	159	343	303	249	552
P.H.F.	0.68	0.75	0.71	0.76	0.78	0.87

Prepared by NDS/ATD

Volumes for: Friday, March 19, 2010 City: San Diego Project #: 10-4095-003

Location: Alcala Vista Apartments/Sports Ctr Entrance N/o Linda Vista Rd

AM Period	NB		SB		EB	WB		PM Period	NB		SB		EB	WB	
00:00	14		5					12:00	50		39				
00:15	10		8					12:15	38		38				
00:30	18		4					12:30	36		31				
00:45	29	71	4	21			92	12:45	25	149	34	142			291
01:00	7		3					13:00	41		29				
01:15	7		7					13:15	60		63				
01:30	11		3					13:30	50		45				
01:45	11	36	5	18			54	13:45	49	200	47	184			384
02:00	6		3					14:00	38		37				
02:15	8		3					14:15	57		50				
02:30	9		1					14:30	48		51				
02:45	2	25	1	8			33	14:45	51	194	39	177			371
03:00	2		0					15:00	54		39				
03:15	2		3					15:15	44		36				
03:30	0		0					15:30	51		33				
03:45	0	4	1	4			8	15:45	50	199	39	147			346
04:00	0		1					16:00	66		31				
04:15	2		1					16:15	57		37				
04:30	0		1					16:30	61		36				
04:45	5	7	2	5			12	16:45	72	256	42	146			402
05:00	7		2					17:00	61		39				
05:15	0		3					17:15	58		37				
05:30	16		2					17:30	53		42				
05:45	37	60	7	14			74	17:45	52	224	53	171			395
06:00	0		5					18:00	48		47				
06:15	4		3					18:15	45		38				
06:30	5		0					18:30	54		41				
06:45	16	25	12	20			45	18:45	60	207	48	174			381
07:00	7		2					19:00	39		39				
07:15	17		9					19:15	50		39				
07:30	21		16					19:30	51		45				
07:45	11	56	24	51			107	19:45	42	182	19	142			324
08:00	38		12					20:00	66		30				
08:15	22		24					20:15	22		23				
08:30	25		25					20:30	32		25				
08:45	32	117	31	92			209	20:45	36	156	22	100			256
09:00	25		11					21:00	61		24				
09:15	25		16					21:15	34		12				
09:30	26		21					21:30	40		39				
09:45	31	107	22	70			177	21:45	55	190	44	119			309
10:00	31		17					22:00	49		36				
10:15	25		31					22:15	48		34				
10:30	21		19					22:30	26		27				
10:45	21	98	23	90			188	22:45	27	150	38	135			285
11:00	19		33					23:00	27		19				
11:15	32		23					23:15	41		22				
11:30	33		39					23:30	42		15				
11:45	32	116	35	130			246	23:45	28	138	8	64			202
Total Vol.		722		523			1245			2245		1701			3946

Daily Totals

NB	SB	Combined
2967	2224	5191

	AM			PM		
Split %	58.0%	42.0%	24.0%	56.9%	43.1%	76.0%
Peak Hour	11:45	11:30	11:30	16:00	13:15	16:30
Volume	156	151	304	256	192	406
P.H.F.	0.78	0.97	0.85	0.93	0.76	0.89

Prepared by NDS/ATD

Volumes for: Monday, March 22, 2010 City: San Diego Project #: 10-4095-003

Location: Alcala Vista Apartments/Sports Ctr Entrance N/o Linda Vista Rd

AM Period	NB		SB		EB		WB		PM Period	NB		SB		EB		WB	
00:00	13		5						12:00	16		11					
00:15	6		7						12:15	35		30					
00:30	4		1						12:30	24		49					
00:45	10	33	2	15				48	12:45	27	102	28	118				220
01:00	8		5						13:00	25		21					
01:15	2		4						13:15	21		37					
01:30	0		1						13:30	28		22					
01:45	0	10	0	10				20	13:45	20	94	20	100				194
02:00	12		1						14:00	27		15					
02:15	2		1						14:15	24		45					
02:30	0		0						14:30	46		43					
02:45	5	19	0	2				21	14:45	17	114	25	128				242
03:00	2		0						15:00	22		28					
03:15	0		0						15:15	33		21					
03:30	0		0						15:30	29		20					
03:45	1	3	1	1				4	15:45	41	125	41	110				235
04:00	0		0						16:00	26		37					
04:15	0		0						16:15	37		39					
04:30	1		0						16:30	48		29					
04:45	0	1	0	0				1	16:45	31	142	24	129				271
05:00	0		2						17:00	41		39					
05:15	3		2						17:15	45		37					
05:30	9		6						17:30	46		58					
05:45	22	34	4	14				48	17:45	42	174	58	192				366
06:00	0		1						18:00	37		32					
06:15	8		3						18:15	35		33					
06:30	10		8						18:30	44		47					
06:45	15	33	7	19				52	18:45	61	177	43	155				332
07:00	15		4						19:00	41		62					
07:15	11		6						19:15	58		40					
07:30	15		25						19:30	61		45					
07:45	26	67	17	52				119	19:45	60	220	37	184				404
08:00	34		9						20:00	35		42					
08:15	24		10						20:15	54		36					
08:30	34		9						20:30	47		39					
08:45	28	120	19	47				167	20:45	52	188	31	148				336
09:00	28		16						21:00	47		45					
09:15	13		30						21:15	36		24					
09:30	21		19						21:30	38		24					
09:45	17	79	28	93				172	21:45	29	150	19	112				262
10:00	27		9						22:00	52		22					
10:15	28		12						22:15	20		26					
10:30	9		15						22:30	27		22					
10:45	22	86	9	45				131	22:45	29	128	15	85				213
11:00	24		23						23:00	27		17					
11:15	22		18						23:15	22		12					
11:30	22		23						23:30	32		5					
11:45	18	86	23	87				173	23:45	25	106	5	39				145
Total Vol.		571		385				956			1720		1500				3220

Daily Totals

NB	SB	Combined	EB	WB
2291	1885	4176		

	AM			PM		
Split %	59.7%	40.3%	22.9%	53.4%	46.6%	77.1%
Peak Hour	08:00	11:45	11:45	18:45	17:00	18:45
Volume	120	113	206	221	192	411
P.H.F.	0.88	0.58	0.71	0.89	0.83	0.97

Prepared by NDS/ATD

Volumes for: Tuesday, March 23, 2010 City: San Diego Project #: 10-4095-003

Location: Alcala Vista Apartments/Sports Ctr Entrance N/o Linda Vista Rd

AM Period	NB		SB		EB	WB		PM Period	NB		SB		EB	WB	
00:00	24		9					12:00	47		25				
00:15	6		6					12:15	54		29				
00:30	6		6					12:30	35		35				
00:45	10	46	0	21			67	12:45	44	180	29	118			298
01:00	11		4					13:00	41		25				
01:15	8		3					13:15	38		27				
01:30	7		4					13:30	32		29				
01:45	7	33	2	13			46	13:45	41	152	34	115			267
02:00	1		0					14:00	35		36				
02:15	1		0					14:15	40		34				
02:30	0		0					14:30	37		23				
02:45	5	7	0	0			7	14:45	29	141	32	125			266
03:00	2		0					15:00	31		20				
03:15	0		3					15:15	31		30				
03:30	0		0					15:30	20		23				
03:45	0	2	2	5			7	15:45	24	106	32	105			211
04:00	0		1					16:00	46		51				
04:15	1		0					16:15	26		35				
04:30	0		1					16:30	27		37				
04:45	0	1	0	2			3	16:45	37	136	29	152			288
05:00	4		1					17:00	23		37				
05:15	1		1					17:15	42		47				
05:30	0		2					17:30	45		50				
05:45	1	6	4	8			14	17:45	41	151	34	168			319
06:00	5		0					18:00	34		36				
06:15	2		0					18:15	33		33				
06:30	8		2					18:30	53		35				
06:45	9	24	7	9			33	18:45	46	166	61	165			331
07:00	12		5					19:00	51		30				
07:15	12		10					19:15	47		43				
07:30	22		21					19:30	32		37				
07:45	20	66	13	49			115	19:45	47	177	41	151			328
08:00	26		8					20:00	57		32				
08:15	25		16					20:15	37		40				
08:30	14		19					20:30	50		27				
08:45	34	99	10	53			152	20:45	42	186	37	136			322
09:00	38		15					21:00	39		44				
09:15	32		17					21:15	32		35				
09:30	35		17					21:30	44		30				
09:45	13	118	5	54			172	21:45	44	159	30	139			298
10:00	22		14					22:00	63		54				
10:15	23		16					22:15	34		25				
10:30	24		34					22:30	30		22				
10:45	30	99	17	81			180	22:45	33	160	19	120			280
11:00	37		13					23:00	17		22				
11:15	23		22					23:15	31		11				
11:30	21		21					23:30	15		15				
11:45	24	105	19	75			180	23:45	25	88	10	58			146
Total Vol.		606		370			976			1802		1552			3354

Daily Totals

NB	SB	Combined	EB	WB
2408	1922	**4330**		

	AM			PM		
Split %	62.1%	37.9%	22.5 %	53.7%	46.3%	77.5 %
Peak Hour	11:45	11:45	11:45	18:30	18:45	18:30
Volume	160	108	268	197	171	366
P.H.F.	0.74	0.77	0.81	0.95	0.70	0.86

Prepared by NDS/ATD

Volumes for: Wednesday, March 24, 2010 City: San Diego Project #: 10-4095-003

Location: Alcala Vista Apartments/Sports Ctr Entrance N/o Linda Vista Rd

AM Period	NB		SB		EB	WB		PM Period	NB		SB		EB	WB	
00:00	22		6					12:00	33		17				
00:15	16		5					12:15	25		19				
00:30	7		11					12:30	33		41				
00:45	15	60	7	29			89	12:45	32	123	25	102			225
01:00	10		2					13:00	35		23				
01:15	5		1					13:15	28		17				
01:30	6		1					13:30	33		34				
01:45	8	29	3	7			36	13:45	30	126	26	100			226
02:00	1		2					14:00	36		23				
02:15	0		2					14:15	25		46				
02:30	1		1					14:30	26		32				
02:45	0	2	0	5			7	14:45	46	133	32	133			266
03:00	0		1					15:00	32		34				
03:15	0		0					15:15	27		20				
03:30	0		1					15:30	39		25				
03:45	1	1	1	3			4	15:45	29	127	33	112			239
04:00	0		1					16:00	41		39				
04:15	0		0					16:15	25		30				
04:30	1		0					16:30	35		22				
04:45	0	1	0	1			2	16:45	28	129	33	124			253
05:00	3		2					17:00	32		41				
05:15	3		0					17:15	48		46				
05:30	13		2					17:30	47		35				
05:45	13	32	3	7			39	17:45	54	181	50	172			353
06:00	1		0					18:00	25		53				
06:15	0		3					18:15	48		39				
06:30	6		2					18:30	42		49				
06:45	9	16	7	12			28	18:45	41	156	76	217			373
07:00	5		5					19:00	53		65				
07:15	13		7					19:15	52		27				
07:30	19		31					19:30	36		30				
07:45	15	52	25	68			120	19:45	47	188	24	146			334
08:00	21		9					20:00	44		41				
08:15	21		15					20:15	39		38				
08:30	18		6					20:30	36		29				
08:45	26	86	21	51			137	20:45	66	185	43	151			336
09:00	28		15					21:00	52		65				
09:15	48		10					21:15	50		27				
09:30	17		23					21:30	29		19				
09:45	11	104	13	61			165	21:45	41	172	23	134			306
10:00	29		24					22:00	42		39				
10:15	27		15					22:15	24		20				
10:30	10		12					22:30	21		18				
10:45	16	82	19	70			152	22:45	16	103	24	101			204
11:00	20		23					23:00	31		26				
11:15	20		20					23:15	42		22				
11:30	25		24					23:30	44		15				
11:45	18	83	30	97			180	23:45	23	140	6	69			209
Total Vol.		548		411			959			1763		1561			3324

Daily Totals

NB	SB	Combined	EB	WB
2311	1972	4283		

	AM			PM		
Split %	57.1%	42.9%	22.4 %	53.0%	47.0%	77.6 %
Peak Hour	08:30	11:45	11:45	20:30	18:15	18:15
Volume	120	107	216	204	229	413
P.H.F.	0.63	0.65	0.73	0.78	0.75	0.88

Prepared by NDS/ATD

Volumes for: Thursday, March 25, 2010 City: San Diego Project #: 10-4095-003

Location: Alcala Vista Apartments/Sports Ctr Entrance N/o Linda Vista Rd

AM Period	NB		SB		EB	WB		PM Period	NB		SB		EB	WB	
00:00	25		10					12:00	29		35				
00:15	14		9					12:15	43		40				
00:30	7		5					12:30	29		34				
00:45	11	57	8	32			89	12:45	32	133	38	147			280
01:00	1		3					13:00	23		33				
01:15	6		2					13:15	52		31				
01:30	6		2					13:30	51		34				
01:45	6	19	3	10			29	13:45	36	162	18	116			278
02:00	1		3					14:00	42		26				
02:15	1		1					14:15	35		36				
02:30	2		0					14:30	44		19				
02:45	1	5	1	5			10	14:45	20	141	19	100			241
03:00	2		0					15:00	23		14				
03:15	2		1					15:15	46		28				
03:30	0		0					15:30	19		24				
03:45	0	4	0	1			5	15:45	39	127	40	106			233
04:00	0		0					16:00	50		40				
04:15	2		1					16:15	35		36				
04:30	0		2					16:30	45		38				
04:45	2	4	0	3			7	16:45	56	186	44	158			344
05:00	5		2					17:00	27		37				
05:15	0		4					17:15	32		46				
05:30	5		5					17:30	37		53				
05:45	2	12	5	16			28	17:45	46	142	49	185			327
06:00	2		2					18:00	48		33				
06:15	4		0					18:15	41		40				
06:30	9		7					18:30	52		42				
06:45	8	23	4	13			36	18:45	66	207	58	173			380
07:00	13		7					19:00	54		84				
07:15	18		13					19:15	46		58				
07:30	22		12					19:30	44		53				
07:45	25	78	14	46			124	19:45	67	211	32	227			438
08:00	30		19					20:00	45		48				
08:15	21		13					20:15	44		30				
08:30	30		26					20:30	41		22				
08:45	37	118	24	82			200	20:45	48	178	37	137			315
09:00	46		22					21:00	53		42				
09:15	31		16					21:15	24		26				
09:30	25		11					21:30	63		30				
09:45	21	123	16	65			188	21:45	59	199	38	136			335
10:00	16		13					22:00	30		32				
10:15	32		17					22:15	24		16				
10:30	25		28					22:30	15		19				
10:45	16	89	23	81			170	22:45	16	85	18	85			170
11:00	17		23					23:00	27		34				
11:15	22		21					23:15	24		14				
11:30	20		23					23:30	19		11				
11:45	38	97	35	102			199	23:45	26	96	10	69			165
Total Vol.		629		456			1085			1867		1639			3506

Daily Totals

NB	SB	Combined	EB	WB
2496	2095	4591		

	AM			PM		
Split %	58.0%	42.0%	23.6 %	53.3%	46.7%	76.4 %
Peak Hour	08:30	11:45	11:45	18:30	18:45	18:45
Volume	144	144	283	218	253	463
P.H.F.	0.78	0.90	0.85	0.86	0.75	0.84

Prepared by NDS/ATD

Volumes for: Friday, March 26, 2010 City: San Diego Project #: 10-4095-003

Location: Alcala Vista Apartments/Sports Ctr Entrance N/o Linda Vista Rd

AM Period	NB		SB		EB	WB		PM Period	NB		SB		EB	WB	
00:00	16		12					12:00	40		45				
00:15	21		8					12:15	72		30				
00:30	17		2					12:30	44		48				
00:45	20	74	4	26			100	12:45	51	207	53	176			383
01:00	15		8					13:00	58		37				
01:15	19		2					13:15	54		41				
01:30	14		4					13:30	36		35				
01:45	9	57	4	18			75	13:45	54	202	60	173			375
02:00	10		11					14:00	38		45				
02:15	13		1					14:15	64		52				
02:30	7		1					14:30	47		55				
02:45	5	35	1	14			49	14:45	55	204	41	193			397
03:00	5		1					15:00	30		49				
03:15	1		0					15:15	40		43				
03:30	0		2					15:30	72		50				
03:45	3	9	0	3			12	15:45	56	198	44	186			384
04:00	1		1					16:00	54		47				
04:15	0		1					16:15	58		36				
04:30	4		2					16:30	43		33				
04:45	2	7	3	7			14	16:45	54	209	51	167			376
05:00	1		1					17:00	51		55				
05:15	1		1					17:15	49		56				
05:30	17		2					17:30	35		36				
05:45	20	39	6	10			49	17:45	49	184	31	178			362
06:00	3		3					18:00	47		42				
06:15	3		2					18:15	26		31				
06:30	6		4					18:30	56		39				
06:45	9	21	3	12			33	18:45	51	180	49	161			341
07:00	8		3					19:00	65		38				
07:15	16		12					19:15	54		47				
07:30	15		24					19:30	42		29				
07:45	29	68	28	67			135	19:45	32	193	35	149			342
08:00	27		15					20:00	26		20				
08:15	15		10					20:15	16		26				
08:30	24		11					20:30	22		29				
08:45	39	105	28	64			169	20:45	48	112	33	108			220
09:00	31		15					21:00	71		43				
09:15	27		17					21:15	52		38				
09:30	32		15					21:30	34		21				
09:45	36	126	24	71			197	21:45	30	187	31	133			320
10:00	25		25					22:00	42		44				
10:15	18		24					22:15	46		44				
10:30	22		29					22:30	24		32				
10:45	21	86	24	102			188	22:45	23	135	36	156			291
11:00	18		38					23:00	16		35				
11:15	34		29					23:15	34		46				
11:30	32		40					23:30	22		27				
11:45	34	118	23	130			248	23:45	23	95	15	123			218
Total Vol.		745		524			1269			2106		1903			4009

Daily Totals

NB	SB		EB	WB
2851	2427	Combined		
		5278		

	AM			PM		
Split %	58.7%	41.3%	24.0%	52.5%	47.5%	76.0%
Peak Hour	11:45	11:45	11:45	15:30	13:45	15:30
Volume	190	146	336	240	212	417
P.H.F.	0.66	0.76	0.82	0.82	0.88	0.85

Prepared by NDS/ATD

Volumes for: Monday, March 29, 2010 City: San Diego Project #: 10-4095-003

Location: Alcala Vista Apartments/Sports Ctr Entrance N/o Linda Vista Rd

AM Period	NB		SB		EB	WB		PM Period	NB		SB		EB	WB	
00:00	18		9					12:00	24		16				
00:15	12		1					12:15	28		25				
00:30	8		11					12:30	20		44				
00:45	12	50	5	26			76	12:45	22	94	25	110			204
01:00	3		4					13:00	17		16				
01:15	4		2					13:15	23		33				
01:30	6		1					13:30	15		21				
01:45	1	14	3	10			24	13:45	28	83	19	89			172
02:00	4		1					14:00	27		21				
02:15	0		0					14:15	36		49				
02:30	1		2					14:30	26		41				
02:45	1	6	0	3			9	14:45	23	112	22	133			245
03:00	0		3					15:00	18		24				
03:15	0		0					15:15	24		25				
03:30	0		0					15:30	32		24				
03:45	1	1	2	5			6	15:45	27	101	37	110			211
04:00	2		0					16:00	18		33				
04:15	0		0					16:15	26		45				
04:30	0		2					16:30	27		25				
04:45	1	3	0	2			5	16:45	36	107	22	125			232
05:00	3		5					17:00	27		35				
05:15	3		1					17:15	45		41				
05:30	7		3					17:30	44		51				
05:45	11	24	2	11			35	17:45	25	141	69	196			337
06:00	1		1					18:00	34		36				
06:15	1		1					18:15	19		26				
06:30	5		12					18:30	35		48				
06:45	11	18	1	15			33	18:45	48	136	49	159			295
07:00	8		3					19:00	49		58				
07:15	14		4					19:15	56		39				
07:30	19		22					19:30	26		41				
07:45	31	72	22	51			123	19:45	63	194	36	174			368
08:00	22		11					20:00	46		47				
08:15	10		11					20:15	28		33				
08:30	16		10					20:30	35		34				
08:45	30	78	18	50			128	20:45	41	150	33	147			297
09:00	28		13					21:00	46		43				
09:15	25		26					21:15	26		26				
09:30	31		18					21:30	30		20				
09:45	21	105	29	86			191	21:45	31	133	22	111			244
10:00	15		11					22:00	26		27				
10:15	16		13					22:15	40		22				
10:30	26		19					22:30	29		17				
10:45	13	70	10	53			123	22:45	16	111	14	80			191
11:00	15		19					23:00	24		15				
11:15	13		22					23:15	4		16				
11:30	16		23					23:30	16		6				
11:45	15	59	20	84			143	23:45	16	60	6	43			103
Total Vol.		500		396			896			1422		1477			2899

Daily Totals

NB	SB	Combined	EB	WB
1922	1873	3795		

	AM			PM		
Split %	55.8%	44.2%	23.6 %	49.1%	50.9%	76.4 %
Peak Hour	08:45	11:45	11:45	19:00	17:15	18:30
Volume	114	105	192	194	197	382
P.H.F.	0.92	0.60	0.75	0.70	0.71	0.89

Prepared by NDS/ATD

Volumes for: Tuesday, March 30, 2010 City: San Diego Project #: 10-4095-003

Location: Alcala Vista Apartments/Sports Ctr Entrance N/o Linda Vista Rd

AM Period	NB		SB		EB	WB		PM Period	NB		SB		EB	WB	
00:00	13		7					12:00	23		28				
00:15	9		6					12:15	39		32				
00:30	12		7					12:30	22		32				
00:45	7	41	0	20			61	12:45	24	108	27	119			227
01:00	3		5					13:00	39		21				
01:15	9		4					13:15	27		23				
01:30	3		2					13:30	51		35				
01:45	4	19	1	12			31	13:45	28	145	23	102			247
02:00	5		2					14:00	20		17				
02:15	0		0					14:15	16		30				
02:30	5		0					14:30	24		21				
02:45	0	10	1	3			13	14:45	15	75	24	92			167
03:00	1		0					15:00	24		16				
03:15	3		2					15:15	29		25				
03:30	2		0					15:30	19		24				
03:45	0	6	1	3			9	15:45	36	108	34	99			207
04:00	2		1					16:00	38		33				
04:15	0		0					16:15	37		41				
04:30	0		1					16:30	31		31				
04:45	0	2	0	2			4	16:45	31	137	35	140			277
05:00	1		1					17:00	43		42				
05:15	1		1					17:15	39		44				
05:30	0		2					17:30	44		50				
05:45	0	2	2	6			8	17:45	34	160	39	175			335
06:00	2		0					18:00	30		52				
06:15	5		0					18:15	31		28				
06:30	6		4					18:30	34		33				
06:45	4	17	8	12			29	18:45	44	139	49	162			301
07:00	10		3					19:00	41		59				
07:15	20		12					19:15	29		46				
07:30	13		17					19:30	35		51				
07:45	21	64	12	44			108	19:45	45	150	36	192			342
08:00	27		7					20:00	44		52				
08:15	18		13					20:15	34		31				
08:30	13		21					20:30	48		32				
08:45	17	75	9	50			125	20:45	55	181	32	147			328
09:00	36		21					21:00	38		32				
09:15	20		17					21:15	30		29				
09:30	32		19					21:30	27		21				
09:45	22	110	7	64			174	21:45	30	125	16	98			223
10:00	18		13					22:00	30		31				
10:15	17		16					22:15	30		26				
10:30	12		32					22:30	22		16				
10:45	21	68	24	85			153	22:45	17	99	18	91			190
11:00	18		16					23:00	23		10				
11:15	23		21					23:15	11		9				
11:30	19		21					23:30	14		11				
11:45	16	76	25	83			159	23:45	28	76	9	39			115
Total Vol.		490		384			874			1503		1456			2959

Daily Totals

NB	SB		EB	WB
1993	1840	Combined		
		3833		

	AM			PM		
Split %	56.1%	43.9%	22.8 %	50.8%	49.2%	77.2 %
Peak Hour	09:00	11:45	11:45	20:00	18:45	18:45
Volume	110	117	217	181	205	354
P.H.F.	0.76	0.91	0.76	0.91	0.87	0.89

Prepared by NDS/ATD

Volumes for: Wednesday, March 31, 2010 City: San Diego Project #: 10-4095-003

Location: Alcala Vista Apartments/Sports Ctr Entrance N/o Linda Vista Rd

AM Period	NB		SB		EB	WB		PM Period	NB		SB		EB	WB	
00:00	16		8					12:00	20		37				
00:15	7		9					12:15	25		28				
00:30	11		9					12:30	27		30				
00:45	11	45	3	29			74	12:45	25	97	40	135			232
01:00	8		3					13:00	24		39				
01:15	9		4					13:15	24		32				
01:30	10		2					13:30	40		41				
01:45	3	30	3	12			42	13:45	36	124	28	140			264
02:00	8		3					14:00	40		33				
02:15	5		0					14:15	36		37				
02:30	1		1					14:30	41		41				
02:45	1	15	1	5			20	14:45	28	145	38	149			294
03:00	1		0					15:00	15		38				
03:15	2		1					15:15	26		39				
03:30	0		0					15:30	28		27				
03:45	5	8	0	1			9	15:45	28	97	53	157			254
04:00	0		0					16:00	44		39				
04:15	2		3					16:15	42		41				
04:30	0		0					16:30	33		41				
04:45	3	5	1	4			9	16:45	33	152	42	163			315
05:00	0		1					17:00	43		50				
05:15	13		7					17:15	36		47				
05:30	11		3					17:30	47		53				
05:45	40	64	1	12			76	17:45	54	180	50	200			380
06:00	1		1					18:00	43		58				
06:15	5		1					18:15	48		33				
06:30	5		9					18:30	17		40				
06:45	10	21	2	13			34	18:45	29	137	44	175			312
07:00	10		4					19:00	30		32				
07:15	13		17					19:15	41		48				
07:30	12		18					19:30	28		26				
07:45	19	54	28	67			121	19:45	38	137	38	144			281
08:00	24		18					20:00	27		35				
08:15	19		12					20:15	34		36				
08:30	17		13					20:30	30		23				
08:45	18	78	21	64			142	20:45	33	124	22	116			240
09:00	23		20					21:00	29		28				
09:15	25		17					21:15	27		20				
09:30	23		12					21:30	39		34				
09:45	20	91	16	65			156	21:45	23	118	14	96			214
10:00	21		25					22:00	29		22				
10:15	22		19					22:15	21		19				
10:30	12		25					22:30	8		16				
10:45	11	66	20	89			155	22:45	16	74	7	64			138
11:00	36		19					23:00	12		10				
11:15	10		28					23:15	4		4				
11:30	27		26					23:30	10		5				
11:45	28	101	31	104			205	23:45	8	34	8	27			61
Total Vol.		578		465			1043			1419		1566			2985

Daily Totals

NB	SB	Combined	EB	WB
1997	2031	**4028**		

	AM			PM		
Split %	55.4%	44.6%	25.9 %	47.5%	52.5%	74.1 %
Peak Hour	11:00	11:45	11:45	17:30	17:15	17:15
Volume	101	126	226	192	208	388
P.H.F.	0.70	0.85	0.96	0.87	0.90	0.93

APPENDIX B

TRIP GENERATION CALCULATION SHEET

USD MASTER PLAN ADJUSTED PROJECT TRIP GENERATION RATE CALCULATIONS

Adjusted USD Trip Rate / FTE Student (using the bed rate from UCSD: 1.26 ADT / bed Assuming 1 bed is equivalent to one on-campus resident/ FTE student)

- **From the Kimley Horn Site Specific Trip Generation Study May 2010:**
  - **6,890** (FTE students reported to be enrolled taking classes at USD)
  - **23,425** (Average ADT determined from counts by Kimley Horn)
  - 23,425 / 6,890 = **3.4 ADT / FTE Student**

- **LLG Assumptions applied to 2010 numbers:**
  - Off-campus Students: **4,823** (6,890*70% ; assuming 70% of FTE Students living off campus)
  - On-campus Students: **2,067** (6,890*30% ; assuming 30% of FTE Students living on campus)
  - 2,067 Students × 1.26 ADT / bed = **2,604 ADT** generated by on-campus residents
  - Total ADT (23,425) – Resident generated ADT (2,604) = **20,821** off-campus FTE generated ADT
  - 20,821 ADT / 4,823 off-campus FTE = **4.32 ADT / off-campus FTE Student**

- **Adjusted Rate Calculation:** Adjustment to assume 40% of the proposed 10,000 total students live on campus:
  - Off-campus Students: 6,000 off campus students * **4.32 ADT** / off-campus FTE Student = **25,920 ADT**
  - On-campus Students: 4,000 on campus students * **1.26 ADT** / on-campus FTE Student = **5,040 ADT**
  - Total Students: **25,920 ADT** (generated by off-campus students) + **5,040 ADT** (generated by on-campus students) = **30,900 total ADT**
  - **30,900 total ADT** / 10,000 total FTE = **3.1 ADT / FTE**

APPENDIX C

THE SANDAG SELECT ZONE ASSIGNMENT PLOT, STUDENT AND EMPLOYEE ZIP CODE DATA FIGURE

SANDAG
Series 11 2030re

University of San Diego

Select Zone Plot
TAZ 2918

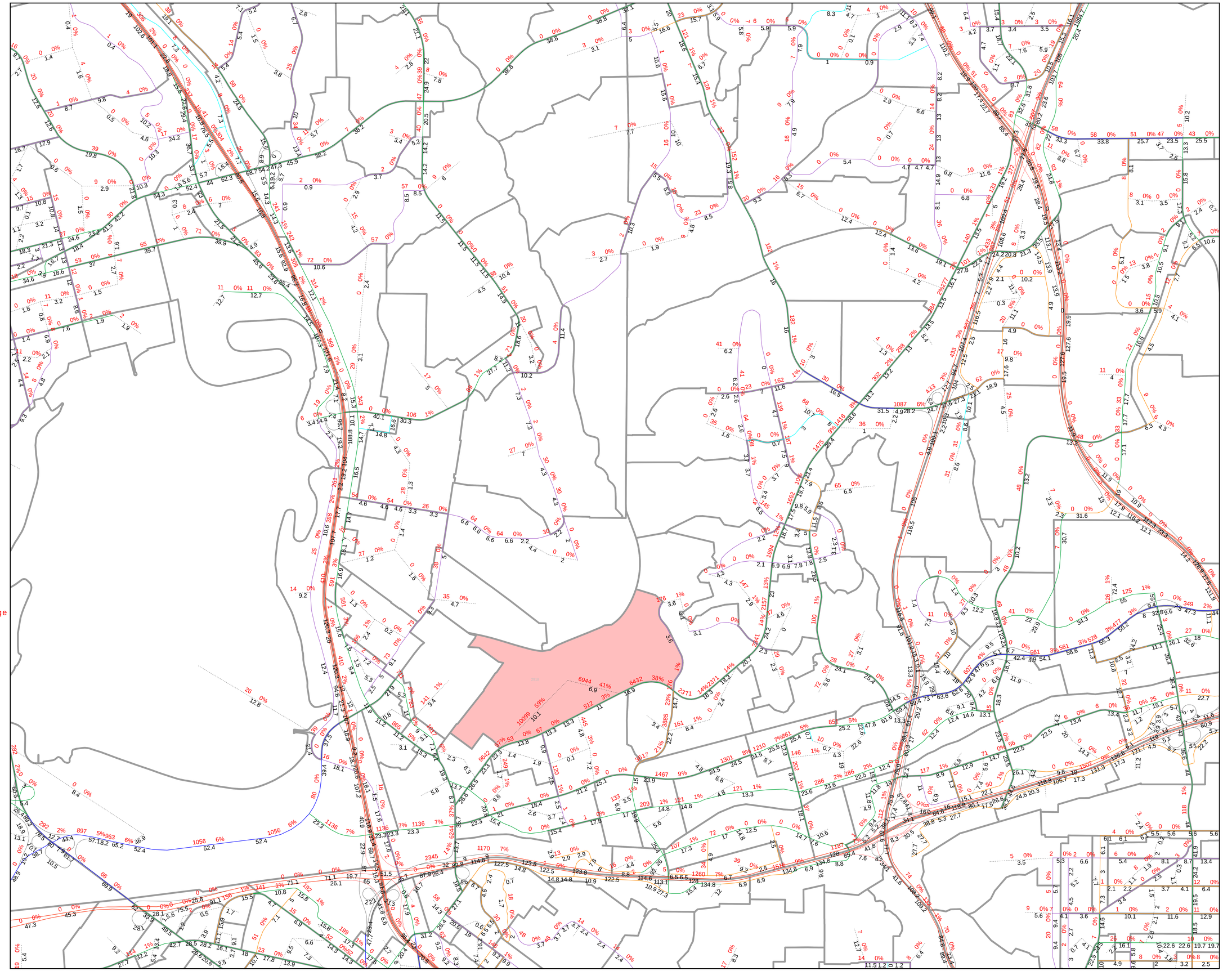

Functional Classifications

- Freeway
- Prime
- Major
- Collector
- Light Collector
- Rural Collector
- Local
- Freeway Ramp
- Local Ramp
- Zone Connector

Traffic Analysis Zones

Selz Volumes & Percentage

Unadjusted ADT(x1000)

Portions of this map contain information from the San Diego Association of Governments (SANDAG) Regional Information System. This product cannot be reproduced without the written permission of SANDAG.

SAN DIEGO ASSOCIATION OF GOVERNMENTS
401 B STREET, SUITE 800
SAN DIEGO, CALIFORNIA 92101 USA
(619) 699-1900
E-mail: sandag@sandag.org
Web site: www.sandag.org

N

0 0.1 0.2 0.3
Miles

SANDAG

servicebureau

Date: May 31, 2011

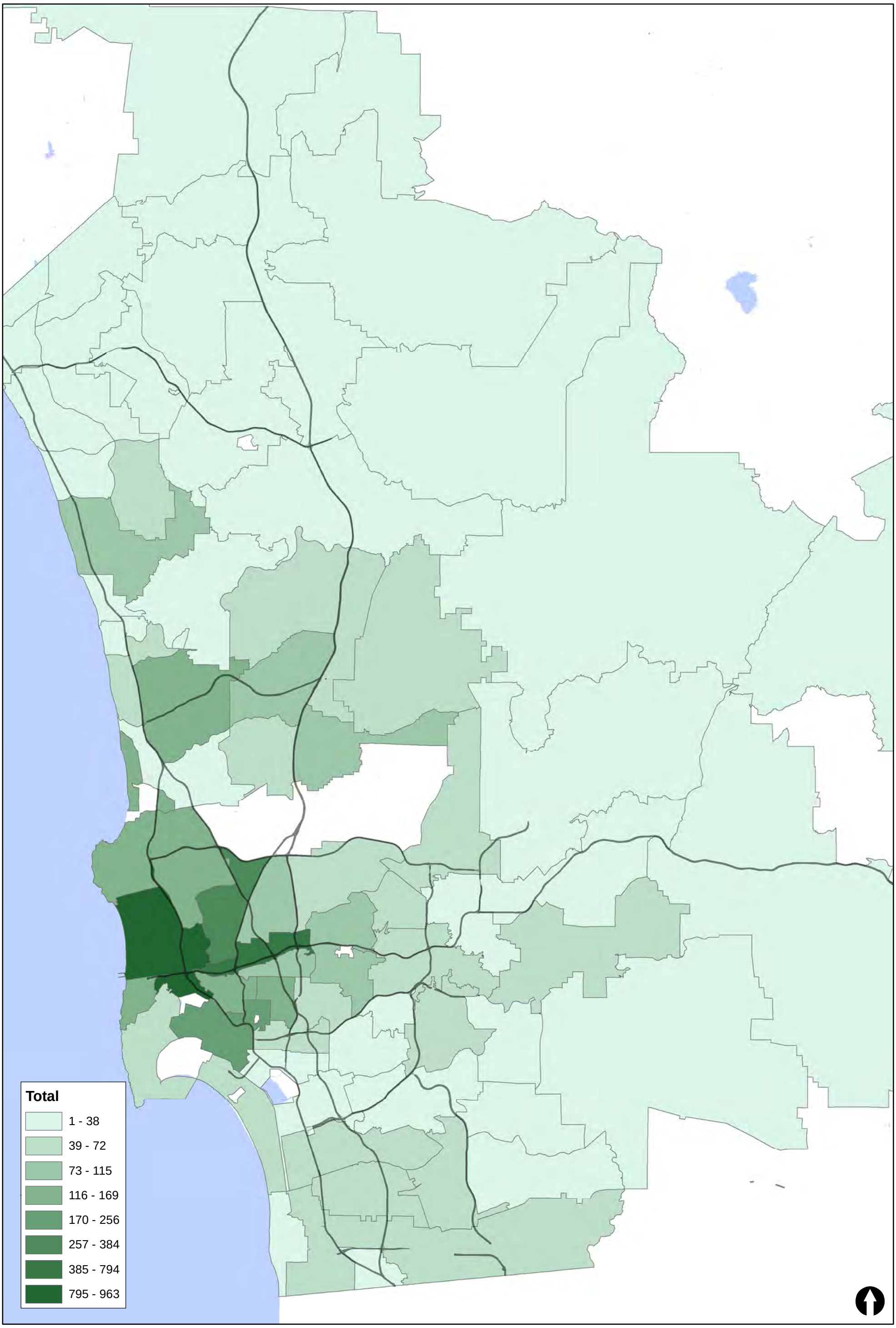

LINSCOTT LAW & GREENSPAN engineers

N:\2358\Figures
Date: 01/10/15

Figure A

Distribution of Students & Employees

USD Master Plan

APPENDIX D

INTERSECTION AND SEGMENT MANUAL COUNT SHEETS AND SIGNAL TIMING SHEETS

Turn Count Summary

Accurate Video Counts Inc
info@accuratevideocounts.com
(619) 987-5136

Location: Pacific Hwy @ Sea World Drive (Tecolote Road)

Date of Count: *Thursday, May 08, 2014*

Analysts: *LV/CD*

Weather: *Sunny*

AVC Proj No: *14-0199*

Vehicular Count

Accurate Video Counts Inc
info@accuratevideocounts.com
(619) 987-5136

Location: Pacific Hwy @ Sea World Drive (Tecolote Road)

AM Period (7:00 AM - 9:00 AM)													
	Southbound			Westbound			Northbound			Eastbound			
	Right	Thru	Left	Right	Thru	Left	Right	Thru	Left	Right	Thru	Left	TOTAL
7:00 AM	14	116	30	9	5	1	11	237	20	10	13	12	478
7:15 AM	21	144	38	16	5	9	14	242	32	21	5	12	559
7:30 AM	25	188	24	19	22	7	13	222	64	19	14	13	630
7:45 AM	34	153	40	13	32	10	33	278	52	19	13	5	682
8:00 AM	31	172	27	16	34	5	20	242	51	23	10	8	639
8:15 AM	17	151	31	12	22	6	7	265	36	20	9	16	592
8:30 AM	26	123	26	27	23	7	13	235	43	13	6	16	558
8:45 AM	20	147	31	19	17	5	7	236	34	22	9	16	563
Total	188	1,194	247	131	160	50	118	1,957	332	147	79	98	4,701

AM Intersection Peak Hour : **7:30 AM - 8:30 AM** Intersection PHF : **0.93**

	Southbound			Westbound			Northbound			Eastbound			TOTAL
	Right	Thru	Left	Right	Thru	Left	Right	Thru	Left	Right	Thru	Left	
Volume	107	664	122	60	110	28	73	1,007	203	81	46	42	2,543
PHF	0.79	0.88	0.76	0.79	0.81	0.70	0.55	0.91	0.79	0.88	0.82	0.66	0.93
Movement PHF		0.94			0.90			0.88			0.92		0.93

PM Period (4:00 PM - 6:00 PM)													
	Southbound			Westbound			Northbound			Eastbound			
	Right	Thru	Left	Right	Thru	Left	Right	Thru	Left	Right	Thru	Left	TOTAL
4:00 PM	34	235	25	41	11	18	9	212	34	36	16	23	694
4:15 PM	35	285	32	61	19	20	14	208	18	47	15	23	777
4:30 PM	30	288	35	51	21	24	13	224	36	38	13	28	801
4:45 PM	41	301	32	36	8	29	20	229	29	44	23	35	827
5:00 PM	45	276	32	49	11	24	26	238	50	46	31	27	855
5:15 PM	49	306	35	49	26	26	28	267	33	42	15	25	901
5:30 PM	50	314	30	32	12	15	33	248	23	34	28	10	829
5:45 PM	56	295	23	30	14	22	20	219	25	37	20	27	788
Total	340	2300	244	349	122	178	163	1,845	248	324	161	198	6,472

PM Intersection Peak Hour : **4:45 PM - 5:45 PM** Intersection PHF : **0.95**

	Southbound			Westbound			Northbound			Eastbound			TOTAL
	Right	Thru	Left	Right	Thru	Left	Right	Thru	Left	Right	Thru	Left	
Volume	185	1197	129	166	57	94	107	982	135	166	97	97	3412
PHF	0.93	0.953	0.921	0.847	0.548	0.81	0.811	0.919	0.675	0.902	0.782	0.693	0.95
Movement PHF		0.96			0.78			0.93			0.87		0.95

Turn Count Summary

Accurate Video Counts Inc
info@accuratevideocounts.com
(619) 987-5136

Location: Sea World Drive (Tecolote Road) @ I-5 SB Ramps

Date of Count: *Thursday, May 08, 2014*

Analysts: *LV/CD*

Weather: *Sunny*

AVC Proj No: *14-0199*

Vehicular Count

Accurate Video Counts Inc
info@accuratevideocounts.com
(619) 987-5136

Location: Sea World Drive (Tecolote Road) @ I-5 SB Ramps

AM Period (7:00 AM - 9:00 AM)													
	Southbound			Westbound			Northbound			Eastbound			
	Right	Thru	Left	Right	Thru	Left	Right	Thru	Left	Right	Thru	Left	TOTAL
7:00 AM	123	0	48	0	37	47	0	0	0	19	239	0	513
7:15 AM	153	0	54	0	50	69	0	0	0	19	251	0	596
7:30 AM	197	0	70	0	40	69	0	0	0	21	233	0	630
7:45 AM	175	0	71	0	52	91	0	0	0	12	284	0	685
8:00 AM	148	0	72	0	82	117	0	0	0	17	248	1	685
8:15 AM	132	0	84	0	67	88	0	0	0	21	272	0	664
8:30 AM	127	0	75	0	48	71	0	0	0	24	254	0	599
8:45 AM	125	0	82	0	73	87	0	0	0	22	249	0	638
Total	1,180	0	556	0	449	639	0	0	0	155	2,030	1	5,010

AM Intersection Peak Hour : **7:30 AM - 8:30 AM** Intersection PHF : **0.97**

	Southbound			Westbound			Northbound			Eastbound			TOTAL
	Right	Thru	Left	Right	Thru	Left	Right	Thru	Left	Right	Thru	Left	
Volume	652	0	297	0	241	365	0	0	0	71	1,037	1	2,664
PHF	0.83	#####	0.88	#####	0.73	0.78	#####	#####	#####	0.85	0.91	0.25	0.97
Movement PHF		0.89			0.76			#DIV/0!			0.94		0.97

PM Period (4:00 PM - 6:00 PM)													
	Southbound			Westbound			Northbound			Eastbound			
	Right	Thru	Left	Right	Thru	Left	Right	Thru	Left	Right	Thru	Left	TOTAL
4:00 PM	209	1	110	0	85	89	0	0	0	53	223	0	770
4:15 PM	231	4	74	0	121	92	0	7	0	50	242	0	821
4:30 PM	262	1	84	0	91	80	0	0	0	51	252	0	821
4:45 PM	287	0	87	0	87	58	0	0	0	46	254	0	819
5:00 PM	316	0	123	0	37	75	0	0	0	66	248	0	865
5:15 PM	309	0	88	0	81	75	0	0	0	82	259	0	894
5:30 PM	317	1	96	0	77	72	0	0	0	52	238	0	853
5:45 PM	307	0	74	0	67	58	0	0	0	44	232	0	782
Total	2238	7	736	0	646	599	0	7	0	444	1,948	0	6,625

PM Intersection Peak Hour : **4:45 PM - 5:45 PM** Intersection PHF : **0.96**

	Southbound			Westbound			Northbound			Eastbound			TOTAL
	Right	Thru	Left	Right	Thru	Left	Right	Thru	Left	Right	Thru	Left	
Volume	1229	1	394	0	282	280	0	0	0	246	999	0	3431
PHF	0.97	0.25	0.801	#####	0.81	0.933	#####	#####	#####	0.75	0.964	#####	0.96
Movement PHF		0.92			0.90			#DIV/0!			0.91		0.96

Turn Count Summary

Accurate Video Counts Inc
info@accuratevideocounts.com
(619) 987-5136

Location: Sea World Drive (Tecolote Road) @ I-5 NB Ramps

Date of Count: *Thursday, May 08, 2014*

Analysts: *LV/CD*

Weather: *Sunny*

AVC Proj No: *14-0199*

Vehicular Count

Accurate Video Counts Inc
info@accuratevideocounts.com
(619) 987-5136

Location: Sea World Drive (Tecolote Road) @ I-5 NB Ramps

AM Period (7:00 AM - 9:00 AM)													
	Southbound			Westbound			Northbound			Eastbound			
	Right	Thru	Left	Right	Thru	Left	Right	Thru	Left	Right	Thru	Left	TOTAL
7:00 AM	0	0	0	97	69	0	34	0	15	0	84	203	502
7:15 AM	0	0	0	124	92	0	34	0	27	0	110	195	582
7:30 AM	0	0	0	145	91	0	46	0	18	0	148	155	603
7:45 AM	0	0	0	147	118	0	54	2	25	0	158	197	701
8:00 AM	0	0	0	125	173	0	48	1	26	0	108	212	693
8:15 AM	0	0	0	104	128	0	53	0	27	0	137	219	668
8:30 AM	0	0	0	95	92	0	56	0	27	0	111	218	599
8:45 AM	0	0	0	90	124	0	92	4	36	0	124	207	677
Total	0	0	0	927	887	0	417	7	201	0	980	1,606	5,025

AM Intersection Peak Hour : **7:30 AM - 8:30 AM** Intersection PHF : **0.95**

	Southbound			Westbound			Northbound			Eastbound			TOTAL
	Right	Thru	Left	Right	Thru	Left	Right	Thru	Left	Right	Thru	Left	
Volume	0	0	0	521	510	0	201	3	96	0	551	783	2,665
PHF	#####	#####	#####	0.89	0.74	#####	0.93	0.38	0.89	#####	0.87	0.89	0.95
Movement PHF	#DIV/0!				0.86			0.93			0.94		0.95

PM Period (4:00 PM - 6:00 PM)													
	Southbound			Westbound			Northbound			Eastbound			
	Right	Thru	Left	Right	Thru	Left	Right	Thru	Left	Right	Thru	Left	TOTAL
4:00 PM	0	0	0	96	139	0	95	1	35	0	163	170	699
4:15 PM	0	0	0	81	155	0	112	0	58	0	126	190	722
4:30 PM	0	0	0	67	116	0	106	0	55	0	149	187	680
4:45 PM	0	0	0	82	91	0	113	0	54	0	136	205	681
5:00 PM	0	0	0	96	63	0	99	0	49	0	160	211	678
5:15 PM	0	0	0	122	93	0	137	0	63	0	142	205	762
5:30 PM	0	0	0	123	94	0	95	0	55	0	130	204	701
5:45 PM	0	0	0	93	82	0	104	1	43	0	120	186	629
Total	0	0	0	760	833	0	861	2	412	0	1,126	1,558	5,552

PM Intersection Peak Hour : **4:45 PM - 5:45 PM** Intersection PHF : **0.93**

	Southbound			Westbound			Northbound			Eastbound			TOTAL
	Right	Thru	Left	Right	Thru	Left	Right	Thru	Left	Right	Thru	Left	
Volume	0	0	0	423	341	0	444	0	221	0	568	825	2822
PHF	#####	#####	#####	0.86	0.907	#####	0.81	#####	0.877	#####	0.888	0.977	0.93
Movement PHF	#DIV/0!				0.88			0.83			0.94		0.93

True Count

6520 Lemarand Ave
San Diego, CA 92115

File Name : 11.MORENA BLVD.TECOLOTE RD
Site Code : 00000000
Start Date : 2/6/2013
Page No : 1

Groups Printed- Vehicles

	MORENA BLVD Southbound				TECOLOTE RD Westbound				MORENA BLVD Northbound				TECOLOTE RD Eastbound				
Start Time	Left	Thru	Right	Peds	Left	Thru	Right	Peds	Left	Thru	Right	Peds	Left	Thru	Right	Peds	Int. Total
07:00	2	12	77	0	1	2	1	0	80	18	5	0	38	7	38	0	281
07:15	0	23	91	0	0	4	2	0	103	23	1	0	57	1	58	0	363
07:30	4	20	83	0	1	4	0	0	116	32	8	0	108	6	87	0	469
07:45	8	36	104	0	0	4	0	0	102	65	15	0	139	9	87	0	569
Total	14	91	355	0	2	14	3	0	401	138	29	0	342	23	270	0	1682
08:00	2	41	165	0	6	7	6	0	98	51	6	0	102	21	62	0	567
08:15	6	30	115	0	1	8	2	0	96	37	5	0	82	16	90	0	488
08:30	2	25	93	0	3	5	3	0	90	42	5	0	108	13	94	0	483
08:45	5	29	100	0	3	7	3	0	73	58	8	0	93	12	96	0	487
Total	15	125	473	0	13	27	14	0	357	188	24	0	385	62	342	0	2025
*** BREAK ***																	
16:00	3	30	93	0	8	12	6	0	115	56	5	0	116	12	86	0	542
16:15	3	30	62	0	6	9	2	0	100	63	5	0	124	11	93	0	508
16:30	3	35	89	0	4	5	3	0	94	50	3	0	117	10	92	0	505
16:45	3	48	86	0	3	9	8	0	107	55	2	0	105	10	137	0	573
Total	12	143	330	0	21	35	19	0	416	224	15	0	462	43	408	0	2128
17:00	6	39	91	0	8	19	11	0	122	33	2	0	127	23	137	0	618
17:15	7	50	83	0	8	18	5	0	124	53	6	0	123	14	159	0	650
17:30	1	39	59	0	6	20	6	0	90	52	7	0	117	8	112	0	517
17:45	7	37	72	0	2	16	5	0	85	59	4	0	98	5	115	0	505
Total	21	165	305	0	24	73	27	0	421	197	19	0	465	50	523	0	2290
Grand Total	62	524	1463	0	60	149	63	0	1595	747	87	0	1654	178	1543	0	8125
Apprch %	3	25.6	71.4	0	22.1	54.8	23.2	0	65.7	30.8	3.6	0	49	5.3	45.7	0	
Total %	0.8	6.4	18	0	0.7	1.8	0.8	0	19.6	9.2	1.1	0	20.4	2.2	19	0	

True Count

6520 Lemarand Ave
San Diego, CA 92115

File Name : 11.MORENA BLVD.TECOLOTE RD
Site Code : 00000000
Start Date : 2/6/2013
Page No : 2

	MORENA BLVD Southbound					TECOLOTE RD Westbound					MORENA BLVD Northbound					TECOLOTE RD Eastbound					
Start Time	**Left**	**Thru**	**Right**	**Peds**	**App. Total**	**Left**	**Thru**	**Right**	**Peds**	**App. Total**	**Left**	**Thru**	**Right**	**Peds**	**App. Total**	**Left**	**Thru**	**Right**	**Peds**	**App. Total**	**Int. Total**
Peak Hour Analysis From 07:00 to 11:45 - Peak 1 of 1																					
Peak Hour for Entire Intersection Begins at 07:45																					
07:45	8	36	104	0	148	0	4	0	0	4	102	65	15	0	182	139	9	87	0	235	569
08:00	2	41	165	0	208	6	7	6	0	19	98	51	6	0	155	102	21	62	0	185	567
08:15	6	30	115	0	151	1	8	2	0	11	96	37	5	0	138	82	16	90	0	188	488
08:30	2	25	93	0	120	3	5	3	0	11	90	42	5	0	137	108	13	94	0	215	483
Total Volume	18	132	477	0	627	10	24	11	0	45	386	195	31	0	612	431	59	333	0	823	2107
% App. Total	2.9	21.1	76.1	0		22.2	53.3	24.4	0		63.1	31.9	5.1	0		52.4	7.2	40.5	0		
PHF	.563	.805	.723	.000	.754	.417	.750	.458	.000	.592	.946	.750	.517	.000	.841	.775	.702	.886	.000	.876	.926

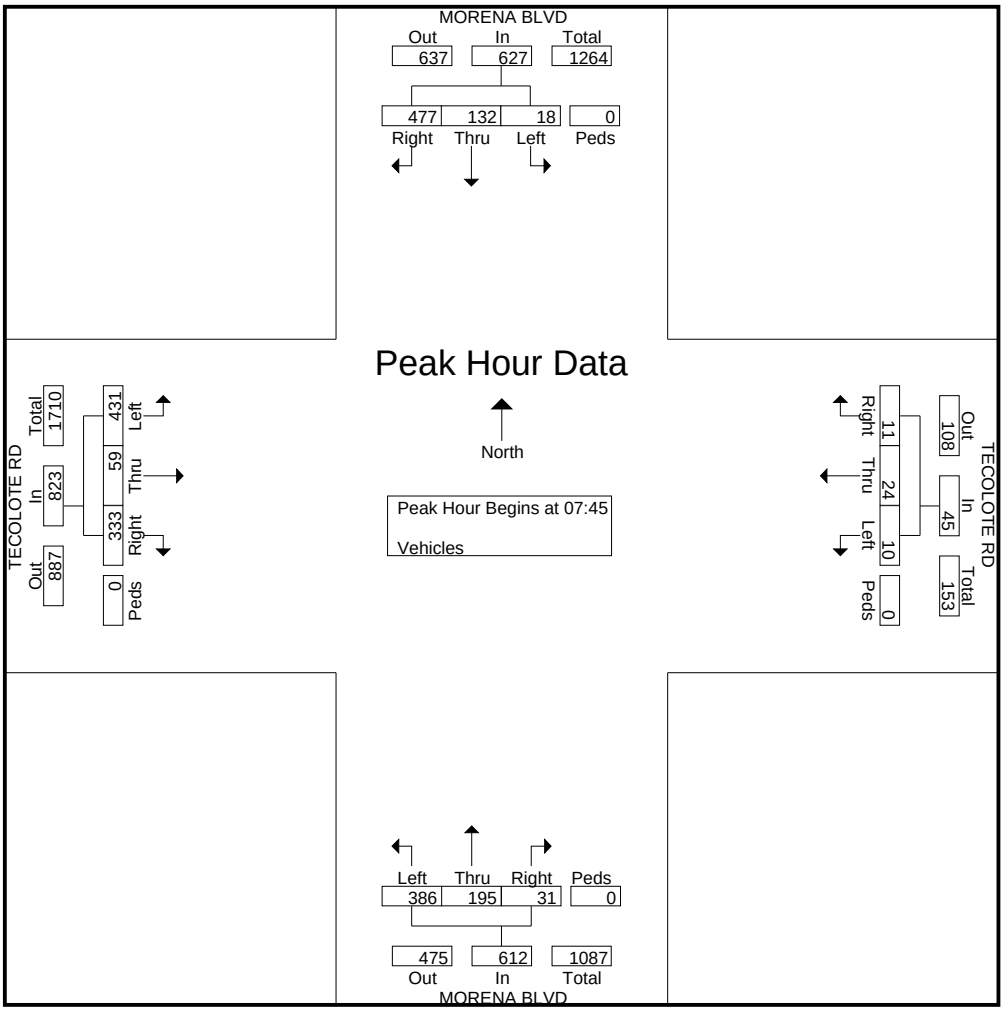

True Count

6520 Lemarand Ave
San Diego, CA 92115

File Name : 11.MORENA BLVD.TECOLOTE RD
Site Code : 00000000
Start Date : 2/6/2013
Page No : 3

	MORENA BLVD Southbound					TECOLOTE RD Westbound					MORENA BLVD Northbound					TECOLOTE RD Eastbound					
Start Time	**Left**	**Thru**	**Right**	**Peds**	**App. Total**	**Left**	**Thru**	**Right**	**Peds**	**App. Total**	**Left**	**Thru**	**Right**	**Peds**	**App. Total**	**Left**	**Thru**	**Right**	**Peds**	**App. Total**	**Int. Total**
Peak Hour Analysis From 12:00 to 17:45 - Peak 1 of 1																					
Peak Hour for Entire Intersection Begins at 16:45																					
16:45	3	48	86	0	137	3	9	8	0	20	107	55	2	0	164	105	10	137	0	252	573
17:00	6	39	91	0	136	8	19	11	0	38	122	33	2	0	157	127	23	137	0	287	618
17:15	7	50	83	0	140	8	18	5	0	31	124	53	6	0	183	123	14	159	0	296	650
17:30	1	39	59	0	99	6	20	6	0	32	90	52	7	0	149	117	8	112	0	237	517
Total Volume	17	176	319	0	512	25	66	30	0	121	443	193	17	0	653	472	55	545	0	1072	2358
% App. Total	3.3	34.4	62.3	0		20.7	54.5	24.8	0		67.8	29.6	2.6	0		44	5.1	50.8	0		
PHF	.607	.880	.876	.000	.914	.781	.825	.682	.000	.796	.893	.877	.607	.000	.892	.929	.598	.857	.000	.905	.907

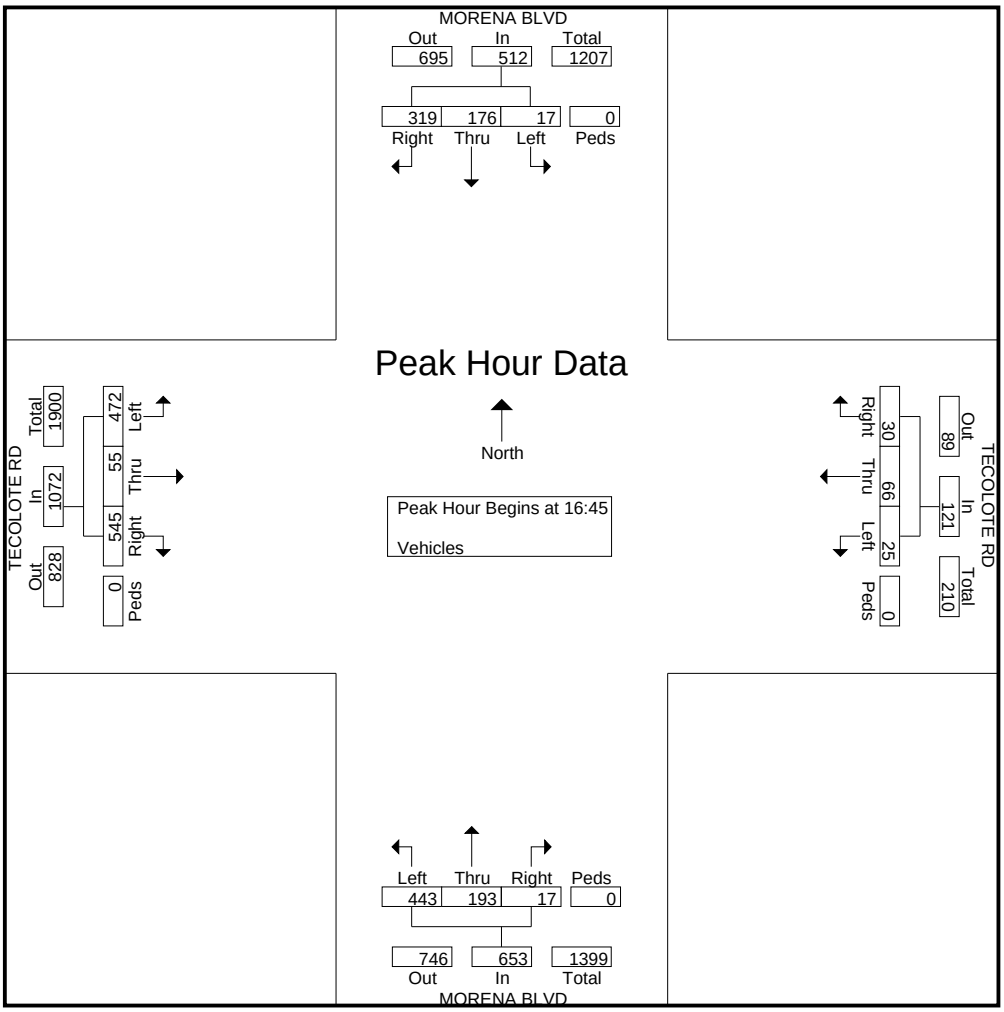

True Count

6520 Lemarand Ave
San Diego, CA 92115

File Name : 13.MORENA BLVD.BUENOS AVE
Site Code : 00000000
Start Date : 2/5/2013
Page No : 1

Groups Printed- Vehicles

	MORENA BLVD Southbound				BUENOS AVE Westbound				MORENA BLVD Northbound				BUENOS AVE Eastbound				
Start Time	Left	Thru	Right	Peds	Left	Thru	Right	Peds	Left	Thru	Right	Peds	Left	Thru	Right	Peds	Int. Total
07:00	2	49	5	0	8	2	1	0	1	93	2	0	6	0	4	0	173
07:15	1	42	7	0	12	5	5	0	3	109	2	0	4	1	2	0	193
07:30	3	91	8	0	12	1	1	0	8	137	4	0	3	2	6	0	276
07:45	0	102	7	0	17	3	2	0	2	181	6	0	7	2	6	0	335
Total	6	284	27	0	49	11	9	0	14	520	14	0	20	5	18	0	977
08:00	1	94	13	0	13	0	2	0	3	172	3	0	5	1	7	0	314
08:15	2	96	8	0	18	1	5	0	3	139	4	0	4	1	6	0	287
08:30	1	76	11	0	15	0	4	0	5	155	4	0	5	1	6	0	283
08:45	0	102	7	0	16	1	1	0	2	145	4	0	11	1	4	0	294
Total	4	368	39	0	62	2	12	0	13	611	15	0	25	4	23	0	1178
*** BREAK ***																	
16:00	3	97	7	0	15	1	3	0	6	150	4	0	18	1	6	0	311
16:15	2	116	13	0	18	2	7	0	11	162	7	0	18	2	9	0	367
16:30	1	129	11	0	12	0	1	0	5	123	11	0	14	2	11	0	320
16:45	5	138	17	0	10	2	3	0	6	114	12	0	16	2	10	0	335
Total	11	480	48	0	55	5	14	0	28	549	34	0	66	7	36	0	1333
17:00	2	166	7	0	23	2	6	0	5	142	5	0	13	1	8	0	380
17:15	2	158	12	0	13	0	3	0	12	123	7	0	15	0	7	0	352
17:30	2	134	7	0	11	2	9	0	3	142	8	0	13	1	5	0	337
17:45	3	104	7	0	10	1	5	0	4	143	7	0	10	3	8	0	305
Total	9	562	33	0	57	5	23	0	24	550	27	0	51	5	28	0	1374
Grand Total	30	1694	147	0	223	23	58	0	79	2230	90	0	162	21	105	0	4862
Apprch %	1.6	90.5	7.9	0	73.4	7.6	19.1	0	3.3	93	3.8	0	56.2	7.3	36.5	0	
Total %	0.6	34.8	3	0	4.6	0.5	1.2	0	1.6	45.9	1.9	0	3.3	0.4	2.2	0	

True Count

6520 Lemarand Ave
San Diego, CA 92115

File Name : 13.MORENA BLVD.BUENOS AVE
Site Code : 00000000
Start Date : 2/5/2013
Page No : 2

	MORENA BLVD Southbound					BUENOS AVE Westbound					MORENA BLVD Northbound					BUENOS AVE Eastbound					
Start Time	**Left**	**Thru**	**Right**	**Peds**	**App. Total**	**Left**	**Thru**	**Right**	**Peds**	**App. Total**	**Left**	**Thru**	**Right**	**Peds**	**App. Total**	**Left**	**Thru**	**Right**	**Peds**	**App. Total**	**Int. Total**
Peak Hour Analysis From 07:00 to 11:45 - Peak 1 of 1																					
Peak Hour for Entire Intersection Begins at 07:45																					
07:45	0	102	7	0	109	17	3	2	0	22	2	181	6	0	189	7	2	6	0	15	335
08:00	1	94	13	0	108	13	0	2	0	15	3	172	3	0	178	5	1	7	0	13	314
08:15	2	96	8	0	106	18	1	5	0	24	3	139	4	0	146	4	1	6	0	11	287
08:30	1	76	11	0	88	15	0	4	0	19	5	155	4	0	164	5	1	6	0	12	283
Total Volume	4	368	39	0	411	63	4	13	0	80	13	647	17	0	677	21	5	25	0	51	1219
% App. Total	1	89.5	9.5	0		78.8	5	16.2	0		1.9	95.6	2.5	0		41.2	9.8	49	0		
PHF	.500	.902	.750	.000	.943	.875	.333	.650	.000	.833	.650	.894	.708	.000	.896	.750	.625	.893	.000	.850	.910

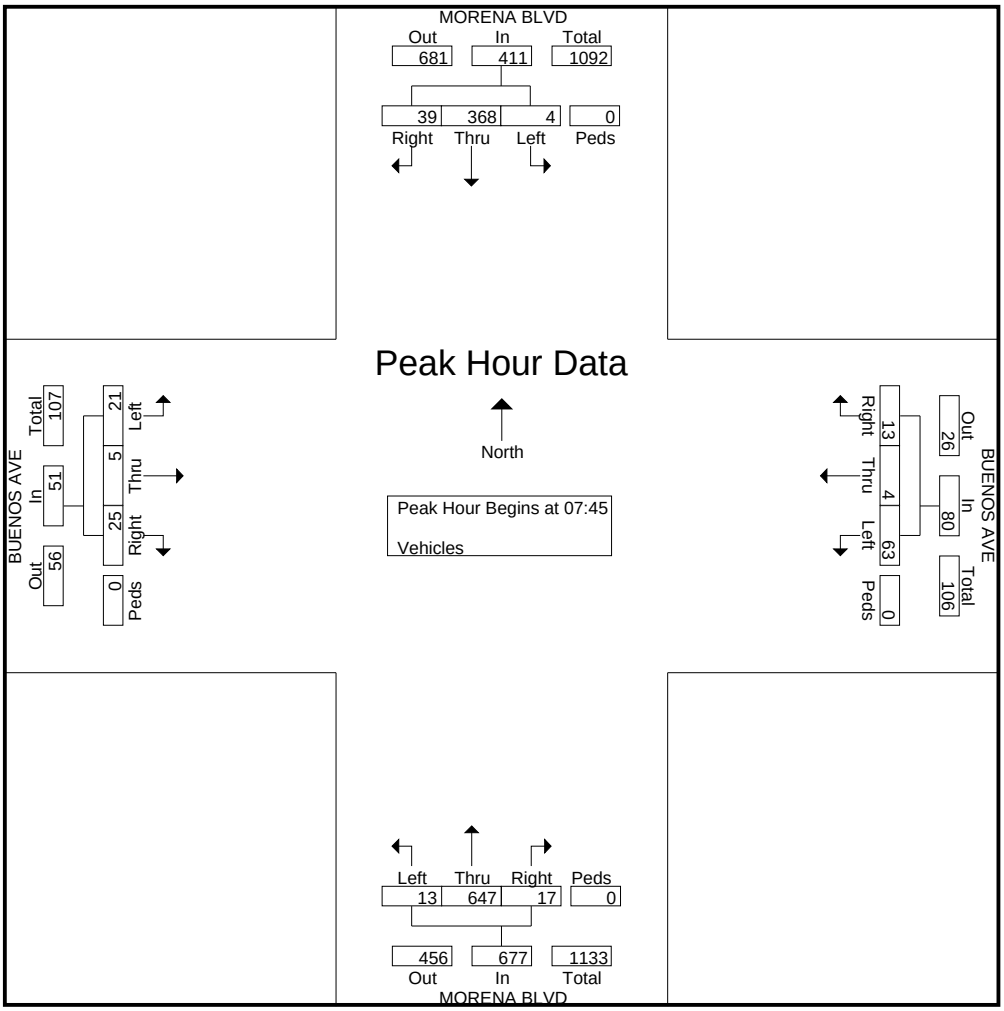

True Count

6520 Lemarand Ave
San Diego, CA 92115

File Name : 13.MORENA BLVD.BUENOS AVE
Site Code : 00000000
Start Date : 2/5/2013
Page No : 3

	MORENA BLVD Southbound					BUENOS AVE Westbound					MORENA BLVD Northbound					BUENOS AVE Eastbound					
Start Time	**Left**	**Thru**	**Right**	**Peds**	**App. Total**	**Left**	**Thru**	**Right**	**Peds**	**App. Total**	**Left**	**Thru**	**Right**	**Peds**	**App. Total**	**Left**	**Thru**	**Right**	**Peds**	**App. Total**	**Int. Total**
Peak Hour Analysis From 12:00 to 17:45 - Peak 1 of 1																					
Peak Hour for Entire Intersection Begins at 16:45																					
16:45	5	138	17	0	160	10	2	3	0	15	6	114	12	0	132	16	2	10	0	28	335
17:00	2	166	7	0	175	23	2	6	0	31	5	142	5	0	152	13	1	8	0	22	380
17:15	2	158	12	0	172	13	0	3	0	16	12	123	7	0	142	15	0	7	0	22	352
17:30	2	134	7	0	143	11	2	9	0	22	3	142	8	0	153	13	1	5	0	19	337
Total Volume	11	596	43	0	650	57	6	21	0	84	26	521	32	0	579	57	4	30	0	91	1404
% App. Total	1.7	91.7	6.6	0		67.9	7.1	25	0		4.5	90	5.5	0		62.6	4.4	33	0		
PHF	.550	.898	.632	.000	.929	.620	.750	.583	.000	.677	.542	.917	.667	.000	.946	.891	.500	.750	.000	.813	.924

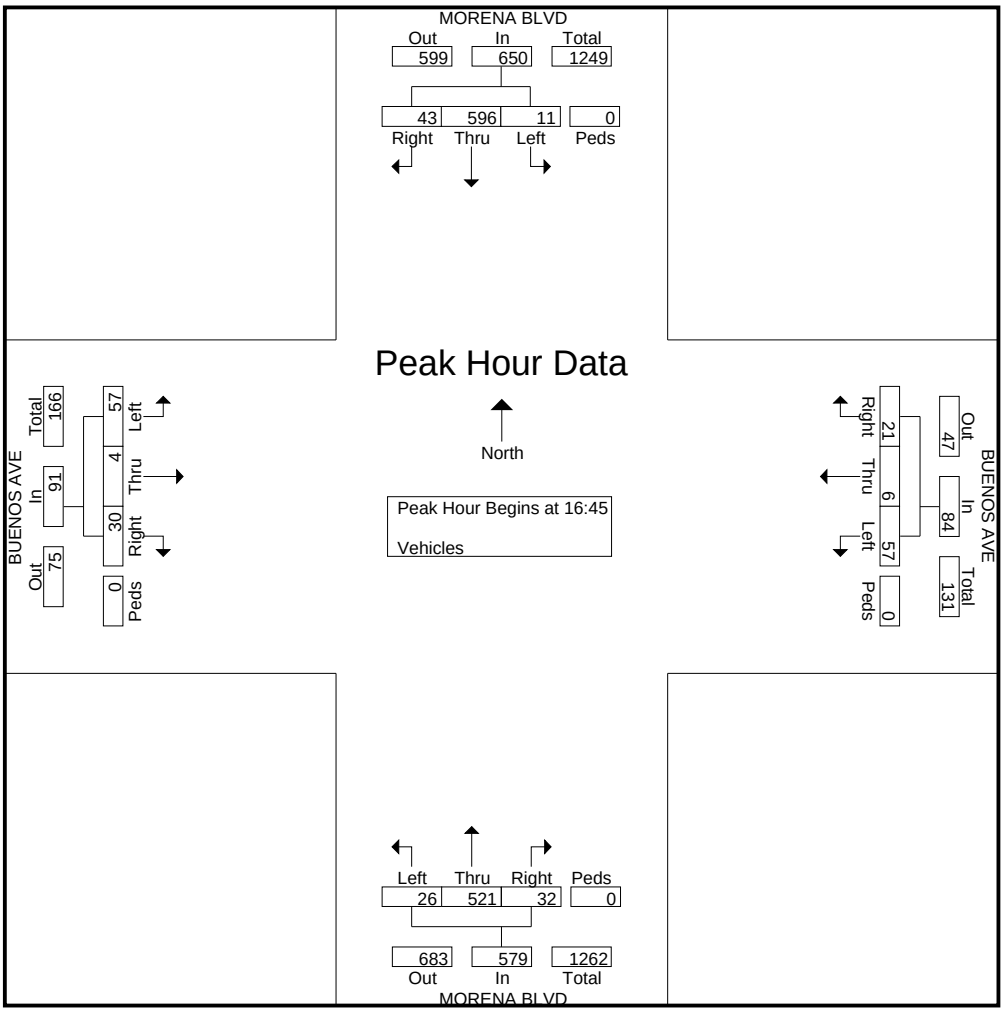

True Count

6520 Lemarand Ave
San Diego, CA 92115

File Name : 14.MORENA BLVD.WEST MORENA BLVD (SOUTH)
Site Code : 00000000
Start Date : 2/5/2013
Page No : 1

Groups Printed- Vehicles

	WEST MORENA BLVD Southbound				MORENA BLVD Westbound				MORENA BLVD Northbound				Eastbound				
Start Time	Left	Thru	Right	Peds	Left	Thru	Right	Peds	Left	Thru	Right	Peds	Left	Thru	Right	Peds	Int. Total
07:00	0	63	0	0	57	0	1	0	0	69	102	0	0	0	0	0	292
07:15	0	91	0	0	107	0	0	0	0	71	144	0	0	0	0	0	413
07:30	0	74	0	0	114	0	1	0	0	111	181	0	0	0	0	0	481
07:45	0	94	0	0	120	0	0	0	0	162	215	0	0	0	0	0	591
Total	0	322	0	0	398	0	2	0	0	413	642	0	0	0	0	0	1777
08:00	0	101	0	0	119	0	0	0	0	150	168	0	0	0	0	0	538
08:15	0	82	0	0	96	0	2	0	0	130	156	0	0	0	0	0	466
08:30	0	78	0	0	123	0	2	0	0	140	158	0	0	0	0	0	501
08:45	0	119	0	0	128	0	2	0	0	117	154	0	0	0	0	0	520
Total	0	380	0	0	466	0	6	0	0	537	636	0	0	0	0	0	2025
*** BREAK ***																	
16:00	0	154	0	0	120	0	7	0	0	115	179	0	0	0	0	0	575
16:15	0	139	0	0	145	0	4	0	0	121	188	0	0	0	0	0	597
16:30	0	136	0	0	162	0	7	0	0	109	145	0	0	0	0	0	559
16:45	0	179	0	0	173	0	4	0	0	105	141	0	0	0	0	0	602
Total	0	608	0	0	600	0	22	0	0	450	653	0	0	0	0	0	2333
17:00	0	164	0	0	202	0	2	0	0	112	146	0	0	0	0	0	626
17:15	0	160	0	0	175	0	0	0	0	103	156	0	0	0	0	0	594
17:30	0	157	0	0	145	0	1	0	0	86	152	0	0	0	0	0	541
17:45	0	141	0	0	125	0	1	0	0	94	144	0	0	0	0	0	505
Total	0	622	0	0	647	0	4	0	0	395	598	0	0	0	0	0	2266
Grand Total	0	1932	0	0	2111	0	34	0	0	1795	2529	0	0	0	0	0	8401
Apprch %	0	100	0	0	98.4	0	1.6	0	0	41.5	58.5	0	0	0	0	0	
Total %	0	23	0	0	25.1	0	0.4	0	0	21.4	30.1	0	0	0	0	0	

True Count

6520 Lemarand Ave
San Diego, CA 92115

File Name : 14.MORENA BLVD.WEST MORENA BLVD (SOUTH)
Site Code : 00000000
Start Date : 2/5/2013
Page No : 2

	WEST MORENA BLVD Southbound					MORENA BLVD Westbound					MORENA BLVD Northbound					Eastbound					
Start Time	**Left**	**Thru**	**Right**	**Peds**	**App. Total**	**Left**	**Thru**	**Right**	**Peds**	**App. Total**	**Left**	**Thru**	**Right**	**Peds**	**App. Total**	**Left**	**Thru**	**Right**	**Peds**	**App. Total**	**Int. Total**
Peak Hour Analysis From 07:00 to 11:45 - Peak 1 of 1																					
Peak Hour for Entire Intersection Begins at 07:45																					
07:45	0	94	0	0	94	120	0	0	0	120	0	162	215	0	377	0	0	0	0	0	591
08:00	0	101	0	0	101	119	0	0	0	119	0	150	168	0	318	0	0	0	0	0	538
08:15	0	82	0	0	82	96	0	2	0	98	0	130	156	0	286	0	0	0	0	0	466
08:30	0	78	0	0	78	123	0	2	0	125	0	140	158	0	298	0	0	0	0	0	501
Total Volume	0	355	0	0	355	458	0	4	0	462	0	582	697	0	1279	0	0	0	0	0	2096
% App. Total	0	100	0	0		99.1	0	0.9	0		0	45.5	54.5	0		0	0	0	0		
PHF	.000	.879	.000	.000	.879	.931	.000	.500	.000	.924	.000	.898	.810	.000	.848	.000	.000	.000	.000	.000	.887

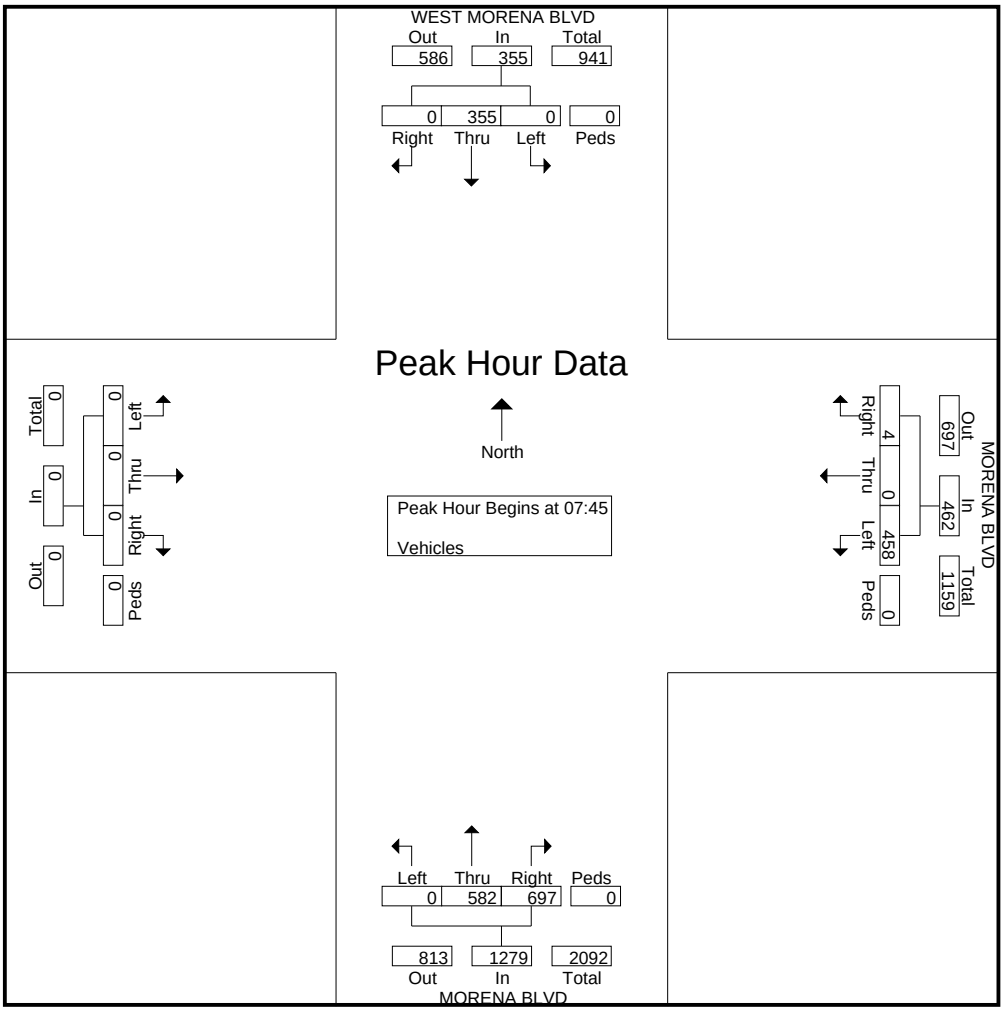

True Count

6520 Lemarand Ave
San Diego, CA 92115

File Name : 14.MORENA BLVD.WEST MORENA BLVD (SOUTH)
Site Code : 00000000
Start Date : 2/5/2013
Page No : 3

	WEST MORENA BLVD Southbound					MORENA BLVD Westbound					MORENA BLVD Northbound					Eastbound					
Start Time	**Left**	**Thru**	**Right**	**Peds**	**App. Total**	**Left**	**Thru**	**Right**	**Peds**	**App. Total**	**Left**	**Thru**	**Right**	**Peds**	**App. Total**	**Left**	**Thru**	**Right**	**Peds**	**App. Total**	**Int. Total**
Peak Hour Analysis From 12:00 to 17:45 - Peak 1 of 1																					
Peak Hour for Entire Intersection Begins at 16:15																					
16:15	0	139	0	0	139	145	0	4	0	149	0	121	188	0	309	0	0	0	0	0	597
16:30	0	136	0	0	136	162	0	7	0	169	0	109	145	0	254	0	0	0	0	0	559
16:45	0	179	0	0	179	173	0	4	0	177	0	105	141	0	246	0	0	0	0	0	602
17:00	0	164	0	0	164	202	0	2	0	204	0	112	146	0	258	0	0	0	0	0	626
Total Volume	0	618	0	0	618	682	0	17	0	699	0	447	620	0	1067	0	0	0	0	0	2384
% App. Total	0	100	0	0		97.6	0	2.4	0		0	41.9	58.1	0		0	0	0	0		
PHF	.000	.863	.000	.000	.863	.844	.000	.607	.000	.857	.000	.924	.824	.000	.863	.000	.000	.000	.000	.000	.952

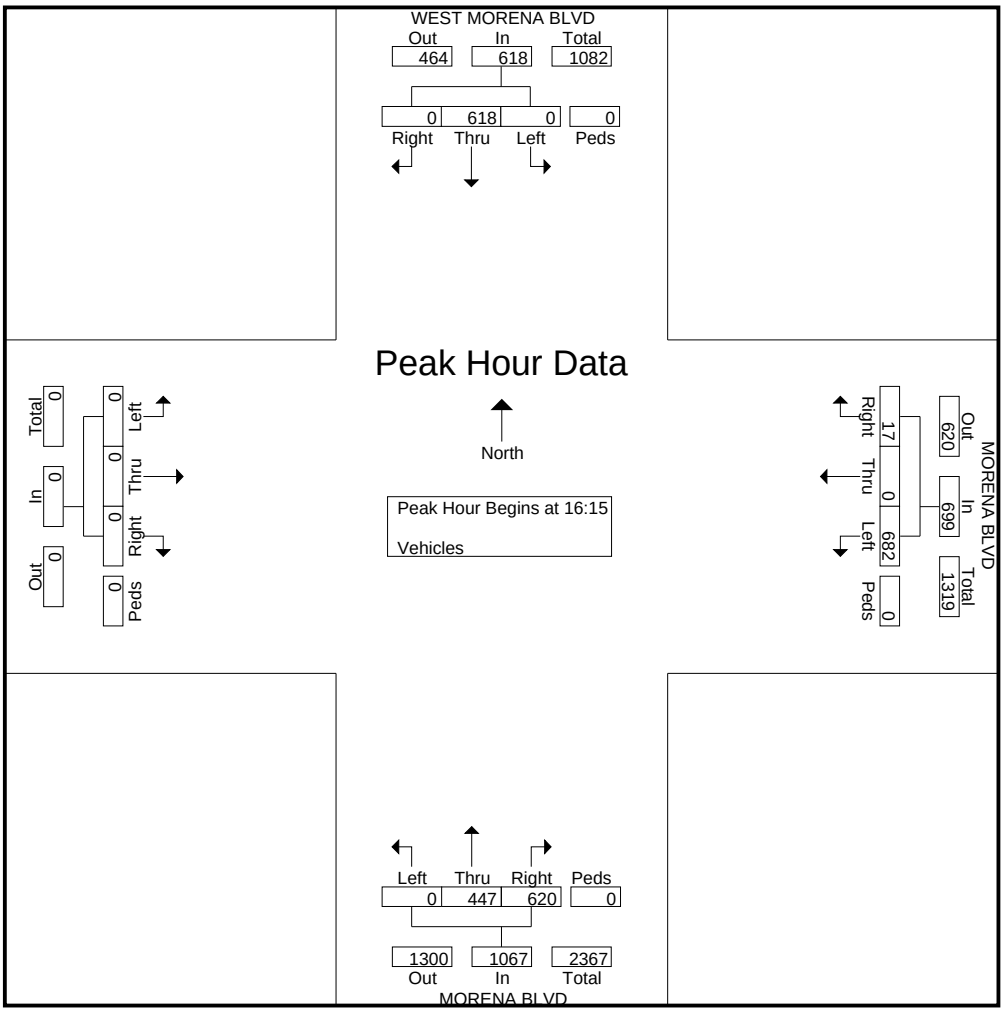

True Count

6520 Lemarand Ave
San Diego, CA 92115

File Name : 18.MORENA BLVD.SHERMAN ST
Site Code : 00000000
Start Date : 2/5/2013
Page No : 1

Groups Printed- Vehicles

	MORENA BLVD Southbound				NAPA ST Westbound				MORENA BLVD Northbound				SHERMAN ST Eastbound				
Start Time	Left	Thru	Right	Peds	Left	Thru	Right	Peds	Left	Thru	Right	Peds	Left	Thru	Right	Peds	Int. Total
07:00	54	58	6	0	1	3	75	0	33	75	4	0	4	2	7	0	322
07:15	90	86	11	0	1	4	92	0	37	115	1	0	7	2	4	0	450
07:30	125	64	9	0	0	5	109	0	22	151	3	0	3	6	8	0	505
07:45	107	90	19	0	0	4	163	0	34	183	3	0	7	2	11	0	623
Total	376	298	45	0	2	16	439	0	126	524	11	0	21	12	30	0	1900
08:00	111	101	16	0	1	2	136	0	28	161	2	0	6	4	16	0	584
08:15	95	80	5	0	2	6	118	0	38	182	2	0	4	2	7	0	541
08:30	116	79	5	0	1	2	140	0	30	152	3	0	7	3	8	0	546
08:45	127	99	11	0	0	14	111	0	36	132	2	0	7	5	18	0	562
Total	449	359	37	0	4	24	505	0	132	627	9	0	24	14	49	0	2233
*** BREAK ***																	
16:00	128	161	5	0	5	4	180	0	17	94	2	0	16	6	44	0	662
16:15	110	151	7	0	3	7	148	0	26	139	4	0	12	7	44	0	658
16:30	158	147	8	0	6	4	134	0	21	83	4	0	8	8	64	0	645
16:45	180	163	8	0	3	3	132	0	20	109	3	0	9	13	28	0	671
Total	576	622	28	0	17	18	594	0	84	425	13	0	45	34	180	0	2636
17:00	159	180	9	0	2	0	146	0	15	101	6	0	13	9	42	0	682
17:15	188	166	8	0	4	5	156	0	14	82	3	0	7	3	26	0	662
17:30	166	133	11	0	6	3	145	0	11	98	4	0	9	6	12	0	604
17:45	149	104	5	0	3	2	146	0	15	89	4	0	9	7	19	0	552
Total	662	583	33	0	15	10	593	0	55	370	17	0	38	25	99	0	2500
Grand Total	2063	1862	143	0	38	68	2131	0	397	1946	50	0	128	85	358	0	9269
Apprch %	50.7	45.8	3.5	0	1.7	3	95.3	0	16.6	81.3	2.1	0	22.4	14.9	62.7	0	
Total %	22.3	20.1	1.5	0	0.4	0.7	23	0	4.3	21	0.5	0	1.4	0.9	3.9	0	

True Count

6520 Lemarand Ave
San Diego, CA 92115

File Name : 18.MORENA BLVD.SHERMAN ST
Site Code : 00000000
Start Date : 2/5/2013
Page No : 2

	MORENA BLVD Southbound					NAPA ST Westbound					MORENA BLVD Northbound					SHERMAN ST Eastbound					
Start Time	**Left**	**Thru**	**Right**	**Peds**	**App. Total**	**Left**	**Thru**	**Right**	**Peds**	**App. Total**	**Left**	**Thru**	**Right**	**Peds**	**App. Total**	**Left**	**Thru**	**Right**	**Peds**	**App. Total**	**Int. Total**
Peak Hour Analysis From 07:00 to 11:45 - Peak 1 of 1																					
Peak Hour for Entire Intersection Begins at 07:45																					
07:45	107	90	19	0	216	0	4	163	0	167	34	183	3	0	220	7	2	11	0	20	623
08:00	111	101	16	0	228	1	2	136	0	139	28	161	2	0	191	6	4	16	0	26	584
08:15	95	80	5	0	180	2	6	118	0	126	38	182	2	0	222	4	2	7	0	13	541
08:30	116	79	5	0	200	1	2	140	0	143	30	152	3	0	185	7	3	8	0	18	546
Total Volume	429	350	45	0	824	4	14	557	0	575	130	678	10	0	818	24	11	42	0	77	2294
% App. Total	52.1	42.5	5.5	0		0.7	2.4	96.9	0		15.9	82.9	1.2	0		31.2	14.3	54.5	0		
PHF	.925	.866	.592	.000	.904	.500	.583	.854	.000	.861	.855	.926	.833	.000	.921	.857	.688	.656	.000	.740	.921

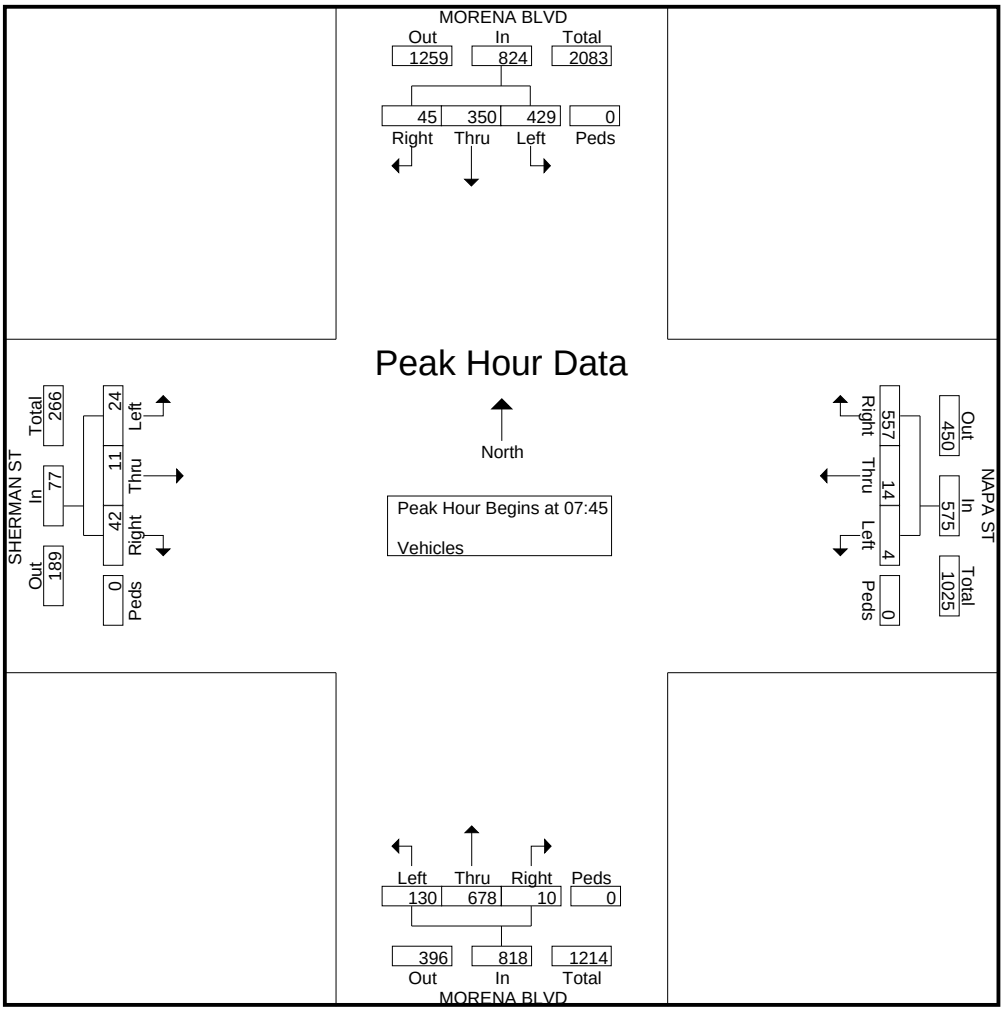

True Count

6520 Lemarand Ave
San Diego, CA 92115

File Name : 18.MORENA BLVD.SHERMAN ST
Site Code : 00000000
Start Date : 2/5/2013
Page No : 3

	MORENA BLVD Southbound					NAPA ST Westbound					MORENA BLVD Northbound					SHERMAN ST Eastbound					
Start Time	**Left**	**Thru**	**Right**	**Peds**	**App. Total**	**Left**	**Thru**	**Right**	**Peds**	**App. Total**	**Left**	**Thru**	**Right**	**Peds**	**App. Total**	**Left**	**Thru**	**Right**	**Peds**	**App. Total**	**Int. Total**
Peak Hour Analysis From 12:00 to 17:45 - Peak 1 of 1																					
Peak Hour for Entire Intersection Begins at 16:30																					
16:30	158	147	8	0	313	6	4	134	0	144	21	83	4	0	108	8	8	64	0	80	645
16:45	180	163	8	0	351	3	3	132	0	138	20	109	3	0	132	9	13	28	0	50	671
17:00	159	180	9	0	348	2	0	146	0	148	15	101	6	0	122	13	9	42	0	64	682
17:15	188	166	8	0	362	4	5	156	0	165	14	82	3	0	99	7	3	26	0	36	662
Total Volume	685	656	33	0	1374	15	12	568	0	595	70	375	16	0	461	37	33	160	0	230	2660
% App. Total	49.9	47.7	2.4	0		2.5	2	95.5	0		15.2	81.3	3.5	0		16.1	14.3	69.6	0		
PHF	.911	.911	.917	.000	.949	.625	.600	.910	.000	.902	.833	.860	.667	.000	.873	.712	.635	.625	.000	.719	.975

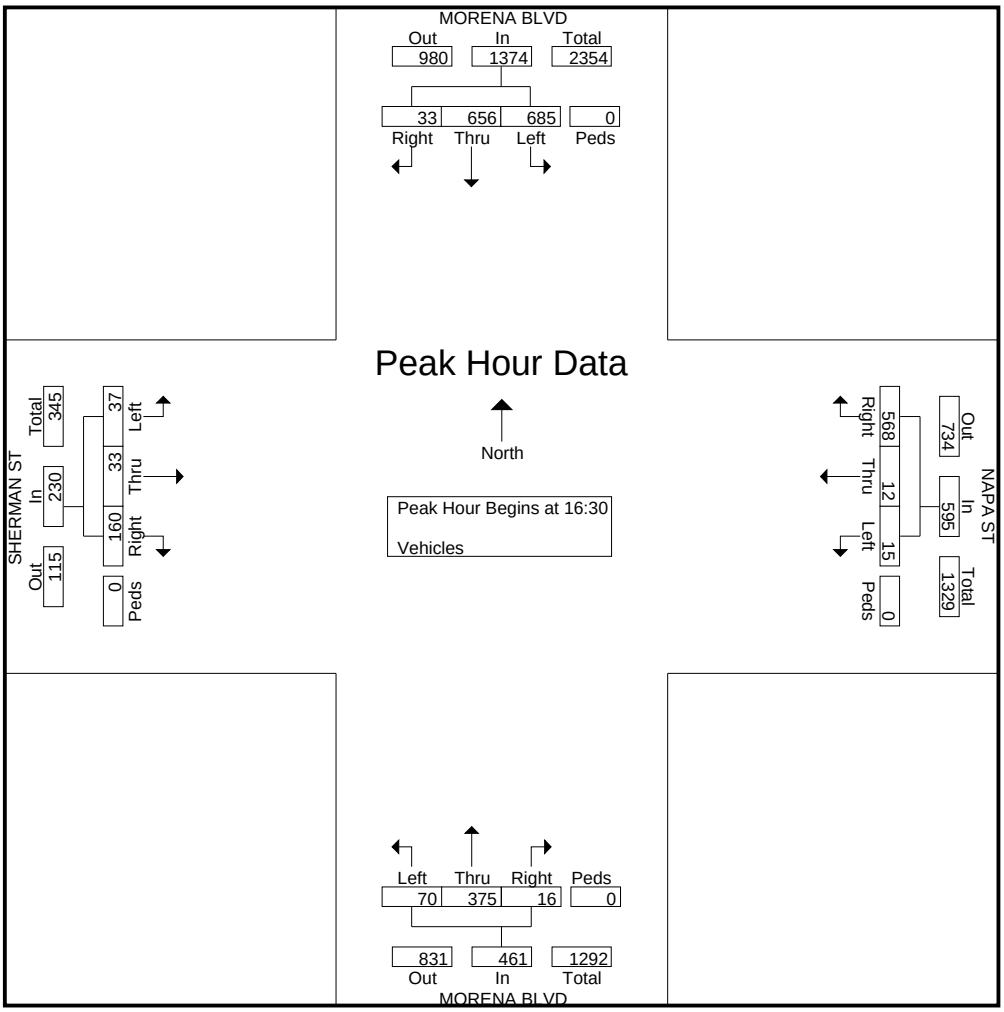

True Count

6520 Lemarand Ave
San Diego, CA 92115

File Name : 19.MORENA BLVD.LINDA VISTA RD
Site Code : 00000000
Start Date : 2/12/2013
Page No : 1

Groups Printed- Vehicles

	MORENA BLVD Southbound				LINDA VISTA RD Westbound				MORENA BLVD Northbound				Eastbound				
Start Time	Left	Thru	Right	Peds	Left	Thru	Right	Peds	Left	Thru	Right	Peds	Left	Thru	Right	Peds	Int. Total
07:00	0	60	0	0	136	0	0	0	0	126	132	0	0	0	0	0	454
07:15	0	95	0	0	136	0	0	0	0	155	189	0	0	0	0	0	575
07:30	0	70	0	0	180	0	0	0	0	197	213	0	0	0	0	0	660
07:45	0	103	0	0	212	0	0	0	0	247	203	0	0	0	0	0	765
Total	0	328	0	0	664	0	0	0	0	725	737	0	0	0	0	0	2454
08:00	0	116	0	0	168	0	0	0	0	200	172	0	0	0	0	0	656
08:15	0	95	0	0	145	0	0	0	0	209	196	0	0	0	0	0	645
08:30	0	91	0	0	147	0	0	0	0	193	226	0	0	0	0	0	657
08:45	0	102	0	0	122	0	0	0	0	180	208	0	0	0	0	0	612
Total	0	404	0	0	582	0	0	0	0	782	802	0	0	0	0	0	2570
*** BREAK ***																	
16:00	0	211	0	0	238	0	0	0	0	113	196	0	0	0	0	0	758
16:15	0	193	0	0	233	0	0	0	0	140	201	0	0	0	0	0	767
16:30	0	217	0	0	187	0	0	0	0	128	191	0	0	0	0	0	723
16:45	0	190	0	0	215	0	0	0	0	127	229	0	0	0	0	0	761
Total	0	811	0	0	873	0	0	0	0	508	817	0	0	0	0	0	3009
17:00	0	221	0	0	238	0	0	0	0	109	227	0	0	0	0	0	795
17:15	0	201	0	0	228	0	0	0	0	96	227	0	0	0	0	0	752
17:30	0	149	0	0	243	0	0	0	0	105	189	0	0	0	0	0	686
17:45	0	133	0	0	191	0	0	0	0	110	219	0	0	0	0	0	653
Total	0	704	0	0	900	0	0	0	0	420	862	0	0	0	0	0	2886
Grand Total	0	2247	0	0	3019	0	0	0	0	2435	3218	0	0	0	0	0	10919
Apprch %	0	100	0	0	100	0	0	0	0	43.1	56.9	0	0	0	0	0	
Total %	0	20.6	0	0	27.6	0	0	0	0	22.3	29.5	0	0	0	0	0	

True Count

6520 Lemarand Ave
San Diego, CA 92115

File Name : 19.MORENA BLVD.LINDA VISTA RD
Site Code : 00000000
Start Date : 2/12/2013
Page No : 2

	MORENA BLVD Southbound					LINDA VISTA RD Westbound					MORENA BLVD Northbound					Eastbound					
Start Time	**Left**	**Thru**	**Right**	**Peds**	**App. Total**	**Left**	**Thru**	**Right**	**Peds**	**App. Total**	**Left**	**Thru**	**Right**	**Peds**	**App. Total**	**Left**	**Thru**	**Right**	**Peds**	**App. Total**	**Int. Total**
Peak Hour Analysis From 07:00 to 11:45 - Peak 1 of 1																					
Peak Hour for Entire Intersection Begins at 07:30																					
07:30	0	70	0	0	70	180	0	0	0	180	0	197	213	0	410	0	0	0	0	0	660
07:45	0	103	0	0	103	212	0	0	0	212	0	247	203	0	450	0	0	0	0	0	765
08:00	0	116	0	0	116	168	0	0	0	168	0	200	172	0	372	0	0	0	0	0	656
08:15	0	95	0	0	95	145	0	0	0	145	0	209	196	0	405	0	0	0	0	0	645
Total Volume	0	384	0	0	384	705	0	0	0	705	0	853	784	0	1637	0	0	0	0	0	2726
% App. Total	0	100	0	0		100	0	0	0		0	52.1	47.9	0		0	0	0	0		
PHF	.000	.828	.000	.000	.828	.831	.000	.000	.000	.831	.000	.863	.920	.000	.909	.000	.000	.000	.000	.000	.891

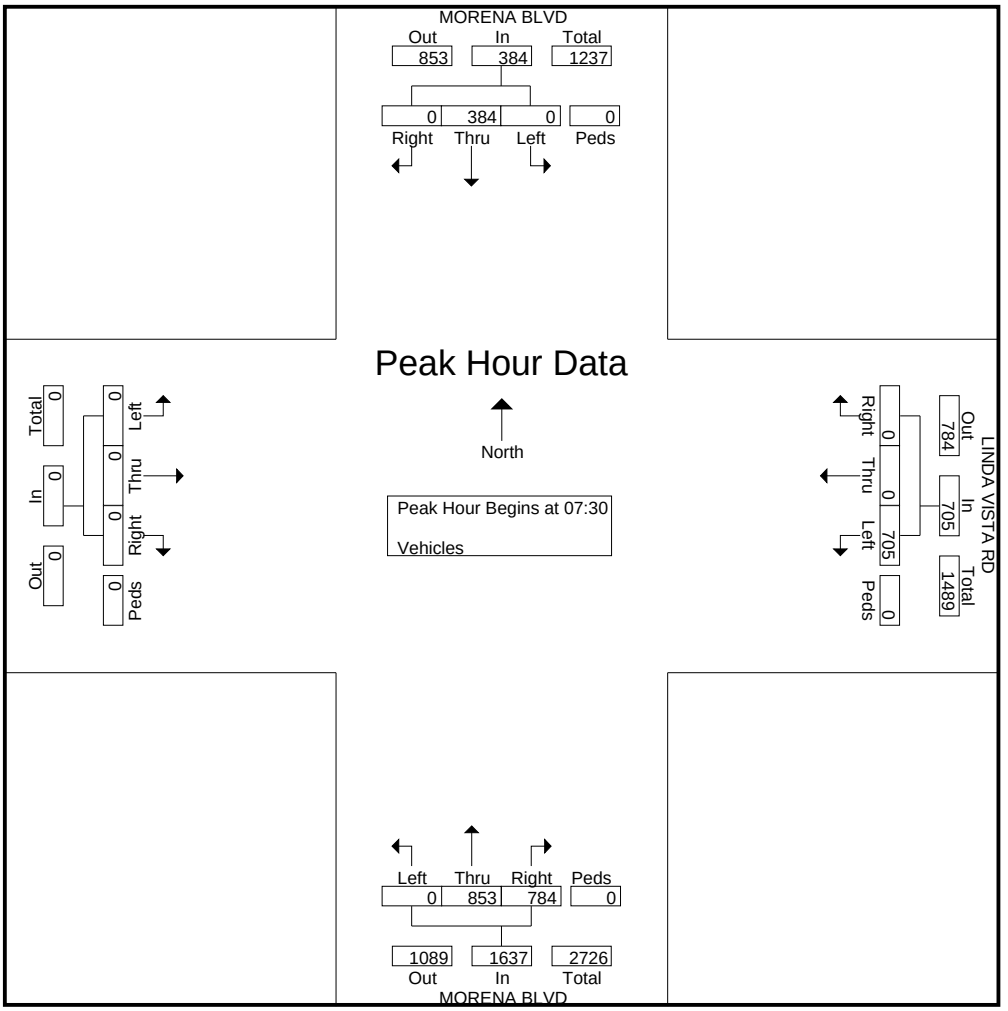

True Count

6520 Lemarand Ave
San Diego, CA 92115

File Name : 19.MORENA BLVD.LINDA VISTA RD
Site Code : 00000000
Start Date : 2/12/2013
Page No : 3

	MORENA BLVD Southbound					LINDA VISTA RD Westbound					MORENA BLVD Northbound					Eastbound					
Start Time	Left	Thru	Right	Peds	App. Total	Left	Thru	Right	Peds	App. Total	Left	Thru	Right	Peds	App. Total	Left	Thru	Right	Peds	App. Total	Int. Total
Peak Hour Analysis From 12:00 to 17:45 - Peak 1 of 1																					
Peak Hour for Entire Intersection Begins at 16:15																					
16:15	0	193	0	0	193	233	0	0	0	233	0	140	201	0	341	0	0	0	0	0	767
16:30	0	217	0	0	217	187	0	0	0	187	0	128	191	0	319	0	0	0	0	0	723
16:45	0	190	0	0	190	215	0	0	0	215	0	127	229	0	356	0	0	0	0	0	761
17:00	0	221	0	0	221	238	0	0	0	238	0	109	227	0	336	0	0	0	0	0	795
Total Volume	0	821	0	0	821	873	0	0	0	873	0	504	848	0	1352	0	0	0	0	0	3046
% App. Total	0	100	0	0		100	0	0	0		0	37.3	62.7	0		0	0	0	0		
PHF	.000	.929	.000	.000	.929	.917	.000	.000	.000	.917	.000	.900	.926	.000	.949	.000	.000	.000	.000	.000	.958

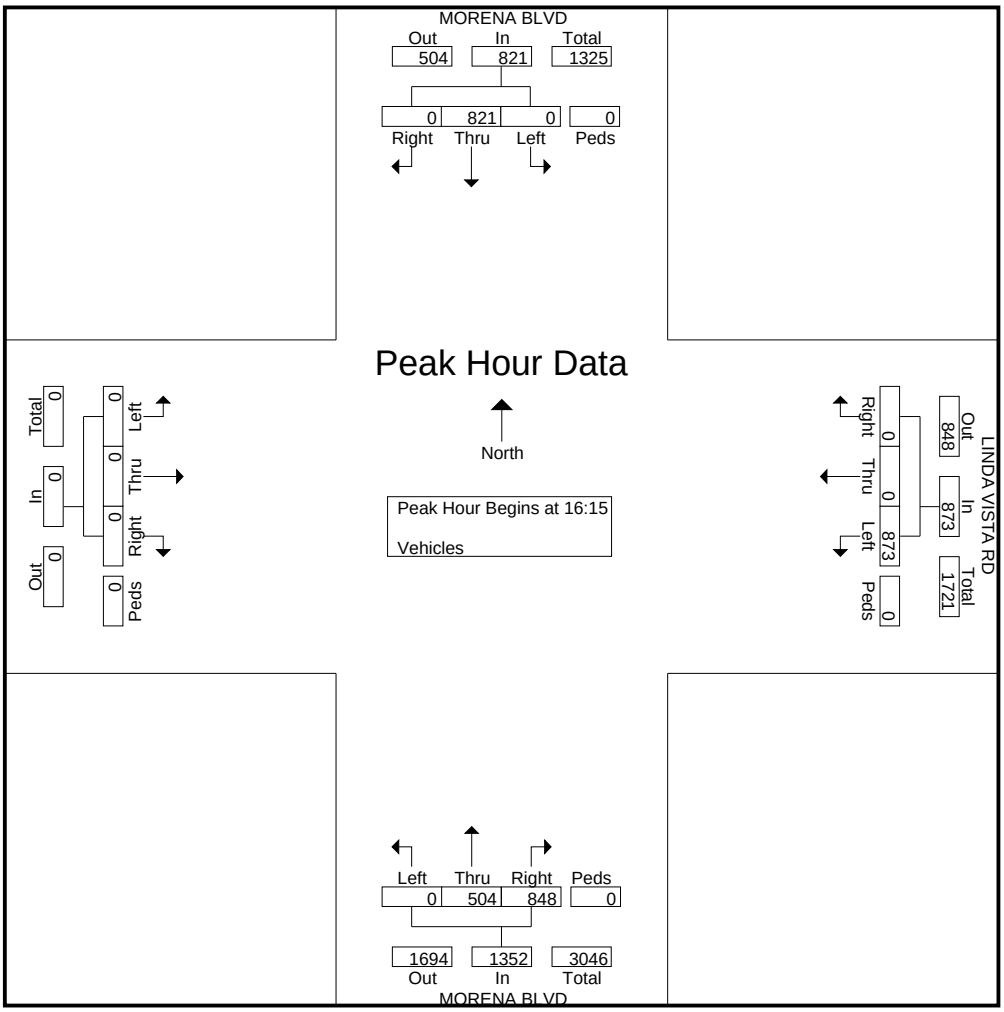

True Count

6520 Lemarand Ave
San Diego, CA 92115

File Name : 20.NAPA ST.LINDA VISTA RD
Site Code : 00000000
Start Date : 2/5/2013
Page No : 1

Groups Printed- Vehicles

	NAPA ST Southbound				LINDA VISTA RD Westbound				NAPA ST Northbound				LINDA VISTA RD Eastbound				
Start Time	Left	Thru	Right	Peds	Left	Thru	Right	Peds	Left	Thru	Right	Peds	Left	Thru	Right	Peds	Int. Total
07:00	45	22	6	0	10	77	50	0	49	29	9	0	3	107	20	0	427
07:15	65	41	4	0	14	97	60	0	47	46	38	0	8	142	26	0	588
07:30	89	30	6	0	16	112	55	0	56	63	68	0	6	180	17	0	698
07:45	86	37	6	0	23	153	93	0	65	86	30	0	7	186	41	0	813
Total	285	130	22	0	63	439	258	0	217	224	145	0	24	615	104	0	2526
08:00	74	34	8	0	13	101	78	0	59	63	23	0	8	127	39	0	627
08:15	73	39	6	0	9	85	55	0	52	60	29	0	6	146	42	0	602
08:30	83	36	8	0	9	96	80	0	51	71	47	0	6	145	46	0	678
08:45	89	31	4	0	16	90	67	0	41	56	107	0	6	181	34	0	722
Total	319	140	26	0	47	372	280	0	203	250	206	0	26	599	161	0	2629
*** BREAK ***																	
16:00	83	59	3	0	43	184	105	0	39	40	23	0	9	144	44	0	776
16:15	72	44	9	0	37	127	64	0	48	61	16	0	9	153	49	0	689
16:30	95	73	4	0	61	156	79	0	67	51	23	0	5	110	48	0	772
16:45	108	65	5	0	35	169	96	0	70	42	36	0	7	168	63	0	864
Total	358	241	21	0	176	636	344	0	224	194	98	0	30	575	204	0	3101
17:00	111	70	7	0	56	161	89	0	59	58	28	0	9	159	51	0	858
17:15	118	68	5	0	75	196	94	0	38	40	32	0	9	166	62	0	903
17:30	115	63	7	0	38	131	79	0	63	53	31	0	12	145	43	0	780
17:45	102	74	5	0	40	171	82	0	58	42	27	0	8	150	61	0	820
Total	446	275	24	0	209	659	344	0	218	193	118	0	38	620	217	0	3361
Grand Total	1408	786	93	0	495	2106	1226	0	862	861	567	0	118	2409	686	0	11617
Apprch %	61.6	34.4	4.1	0	12.9	55	32	0	37.6	37.6	24.8	0	3.7	75	21.4	0	
Total %	12.1	6.8	0.8	0	4.3	18.1	10.6	0	7.4	7.4	4.9	0	1	20.7	5.9	0	

True Count

6520 Lemarand Ave
San Diego, CA 92115

File Name : 20.NAPA ST.LINDA VISTA RD
Site Code : 00000000
Start Date : 2/5/2013
Page No : 2

	NAPA ST Southbound					LINDA VISTA RD Westbound					NAPA ST Northbound					LINDA VISTA RD Eastbound					
Start Time	**Left**	**Thru**	**Right**	**Peds**	**App. Total**	**Left**	**Thru**	**Right**	**Peds**	**App. Total**	**Left**	**Thru**	**Right**	**Peds**	**App. Total**	**Left**	**Thru**	**Right**	**Peds**	**App. Total**	**Int. Total**
Peak Hour Analysis From 07:00 to 11:45 - Peak 1 of 1																					
Peak Hour for Entire Intersection Begins at 07:30																					
07:30	89	30	6	0	125	16	112	55	0	183	56	63	68	0	187	6	180	17	0	203	698
07:45	86	37	6	0	129	23	153	93	0	269	65	86	30	0	181	7	186	41	0	234	813
08:00	74	34	8	0	116	13	101	78	0	192	59	63	23	0	145	8	127	39	0	174	627
08:15	73	39	6	0	118	9	85	55	0	149	52	60	29	0	141	6	146	42	0	194	602
Total Volume	322	140	26	0	488	61	451	281	0	793	232	272	150	0	654	27	639	139	0	805	2740
% App. Total	66	28.7	5.3	0		7.7	56.9	35.4	0		35.5	41.6	22.9	0		3.4	79.4	17.3	0		
PHF	.904	.897	.813	.000	.946	.663	.737	.755	.000	.737	.892	.791	.551	.000	.874	.844	.859	.827	.000	.860	.843

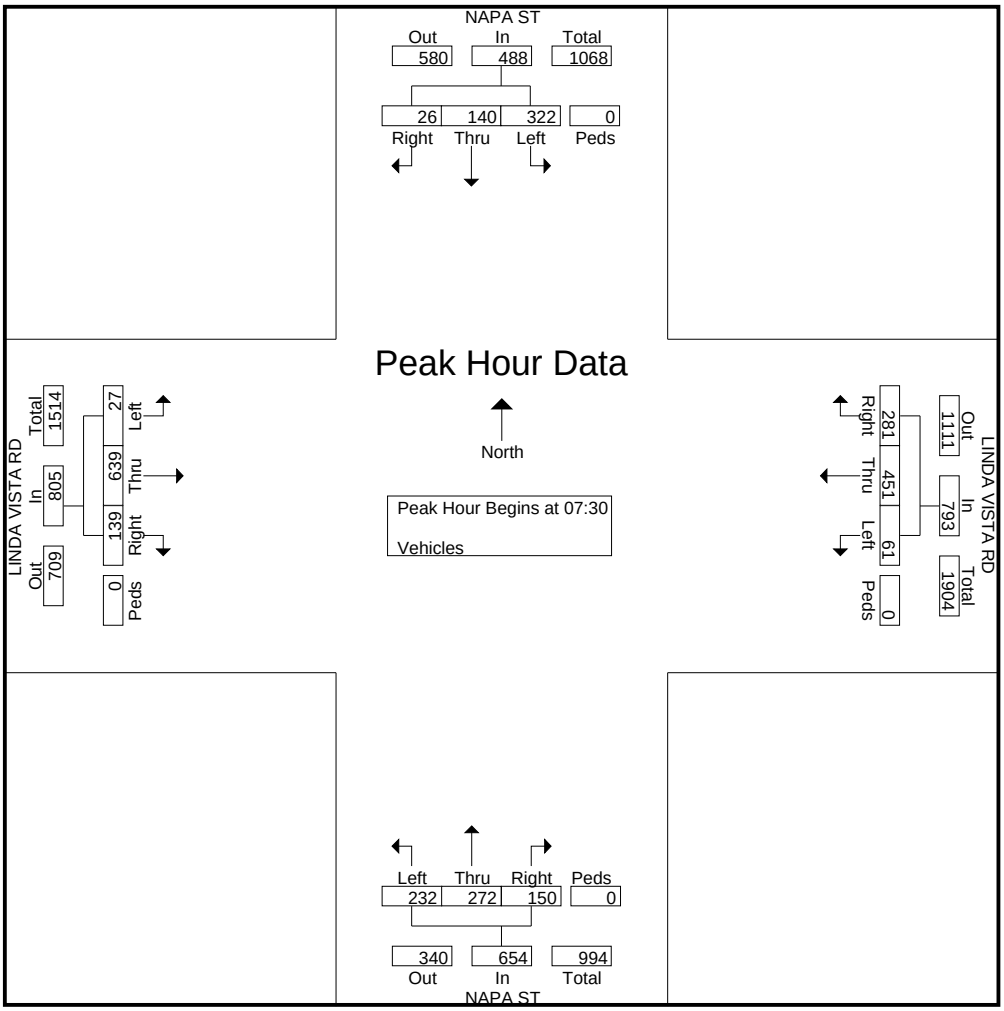

True Count

6520 Lemarand Ave
San Diego, CA 92115

File Name : 20.NAPA ST.LINDA VISTA RD
Site Code : 00000000
Start Date : 2/5/2013
Page No : 3

	NAPA ST Southbound					LINDA VISTA RD Westbound					NAPA ST Northbound					LINDA VISTA RD Eastbound					
Start Time	**Left**	**Thru**	**Right**	**Peds**	**App. Total**	**Left**	**Thru**	**Right**	**Peds**	**App. Total**	**Left**	**Thru**	**Right**	**Peds**	**App. Total**	**Left**	**Thru**	**Right**	**Peds**	**App. Total**	**Int. Total**
Peak Hour Analysis From 12:00 to 17:45 - Peak 1 of 1																					
Peak Hour for Entire Intersection Begins at 16:45																					
16:45	108	65	5	0	178	35	169	96	0	300	70	42	36	0	148	7	168	63	0	238	864
17:00	111	70	7	0	188	56	161	89	0	306	59	58	28	0	145	9	159	51	0	219	858
17:15	118	68	5	0	191	75	196	94	0	365	38	40	32	0	110	9	166	62	0	237	903
17:30	115	63	7	0	185	38	131	79	0	248	63	53	31	0	147	12	145	43	0	200	780
Total Volume	452	266	24	0	742	204	657	358	0	1219	230	193	127	0	550	37	638	219	0	894	3405
% App. Total	60.9	35.8	3.2	0		16.7	53.9	29.4	0		41.8	35.1	23.1	0		4.1	71.4	24.5	0		
PHF	.958	.950	.857	.000	.971	.680	.838	.932	.000	.835	.821	.832	.882	.000	.929	.771	.949	.869	.000	.939	.943

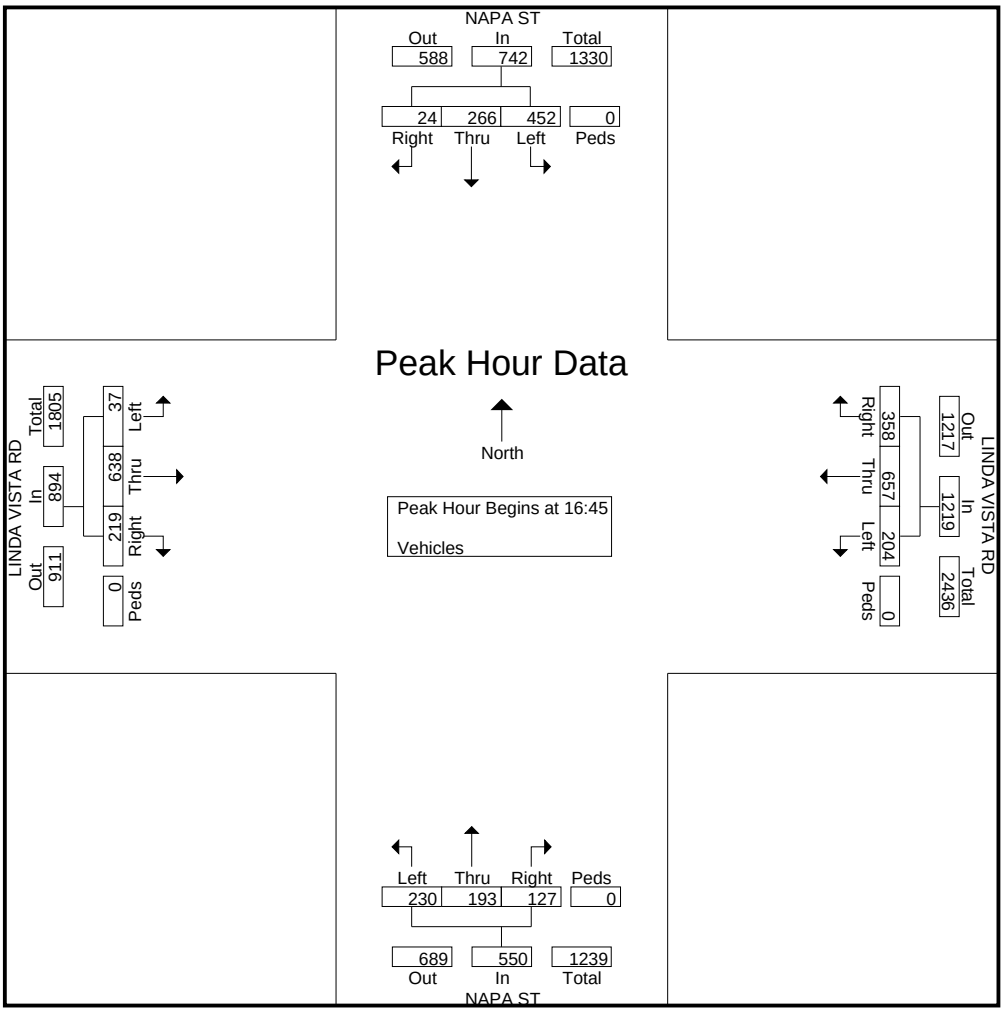

True Count

6520 Lemarand Ave
San Diego, CA 92115

File Name : 21.MARIAN WAY.LINDA VISTA RD
Site Code : 00000000
Start Date : 2/5/2013
Page No : 1

Groups Printed- Vehicles

	MARIAN WY Southbound				LINDA VISTA RD Westbound				MARIAN WY Northbound				LINDA VISTA RD Eastbound				
Start Time	Left	Thru	Right	Peds	Left	Thru	Right	Peds	Left	Thru	Right	Peds	Left	Thru	Right	Peds	Int. Total
07:00	1	1	18	0	0	137	8	0	13	1	1	0	43	105	11	0	339
07:15	2	0	12	0	0	117	12	0	21	3	2	0	114	137	5	0	425
07:30	3	0	13	0	2	168	17	0	25	9	1	0	154	199	8	0	599
07:45	1	0	10	0	1	241	9	0	31	2	0	0	107	174	7	0	583
Total	7	1	53	0	3	663	46	0	90	15	4	0	418	615	31	0	1946
08:00	4	0	9	0	1	142	7	0	18	2	0	0	64	136	10	0	393
08:15	1	0	10	0	0	133	8	0	27	7	0	0	71	143	13	0	413
08:30	3	1	16	0	0	149	19	0	23	3	0	0	107	148	10	0	479
08:45	6	3	17	0	3	111	67	0	18	27	1	0	160	179	16	0	608
Total	14	4	52	0	4	535	101	0	86	39	1	0	402	606	49	0	1893
*** BREAK ***																	
16:00	47	5	153	0	0	204	6	0	22	0	4	0	19	162	34	0	656
16:15	9	2	59	0	3	214	3	0	21	1	6	0	31	181	29	0	559
16:30	13	3	62	0	1	157	3	0	16	1	5	0	30	159	20	0	470
16:45	18	3	94	0	1	179	7	0	18	1	3	0	38	205	24	0	591
Total	87	13	368	0	5	754	19	0	77	3	18	0	118	707	107	0	2276
17:00	24	5	67	0	2	183	6	0	14	1	2	0	82	211	30	0	627
17:15	36	7	117	0	0	217	20	0	19	2	3	0	69	221	21	0	732
17:30	44	6	168	0	2	194	9	0	17	3	2	0	67	187	19	0	718
17:45	16	1	39	0	3	179	12	0	8	0	1	0	69	186	7	0	521
Total	120	19	391	0	7	773	47	0	58	6	8	0	287	805	77	0	2598
Grand Total	228	37	864	0	19	2725	213	0	311	63	31	0	1225	2733	264	0	8713
Apprch %	20.2	3.3	76.5	0	0.6	92.2	7.2	0	76.8	15.6	7.7	0	29	64.7	6.3	0	
Total %	2.6	0.4	9.9	0	0.2	31.3	2.4	0	3.6	0.7	0.4	0	14.1	31.4	3	0	

True Count

6520 Lemarand Ave
San Diego, CA 92115

File Name : 21.MARIAN WAY.LINDA VISTA RD
Site Code : 00000000
Start Date : 2/5/2013
Page No : 2

	MARIAN WY Southbound					LINDA VISTA RD Westbound					MARIAN WY Northbound					LINDA VISTA RD Eastbound					
Start Time	Left	Thru	Right	Peds	App. Total	Left	Thru	Right	Peds	App. Total	Left	Thru	Right	Peds	App. Total	Left	Thru	Right	Peds	App. Total	Int. Total
Peak Hour Analysis From 07:00 to 11:45 - Peak 1 of 1																					
Peak Hour for Entire Intersection Begins at 07:15																					
07:15	2	0	12	0	14	0	117	12	0	129	21	3	2	0	26	114	137	5	0	256	425
07:30	3	0	13	0	16	2	168	17	0	187	25	9	1	0	35	154	199	8	0	361	599
07:45	1	0	10	0	11	1	241	9	0	251	31	2	0	0	33	107	174	7	0	288	583
08:00	4	0	9	0	13	1	142	7	0	150	18	2	0	0	20	64	136	10	0	210	393
Total Volume	10	0	44	0	54	4	668	45	0	717	95	16	3	0	114	439	646	30	0	1115	2000
% App. Total	18.5	0	81.5	0		0.6	93.2	6.3	0		83.3	14	2.6	0		39.4	57.9	2.7	0		
PHF	.625	.000	.846	.000	.844	.500	.693	.662	.000	.714	.766	.444	.375	.000	.814	.713	.812	.750	.000	.772	.835

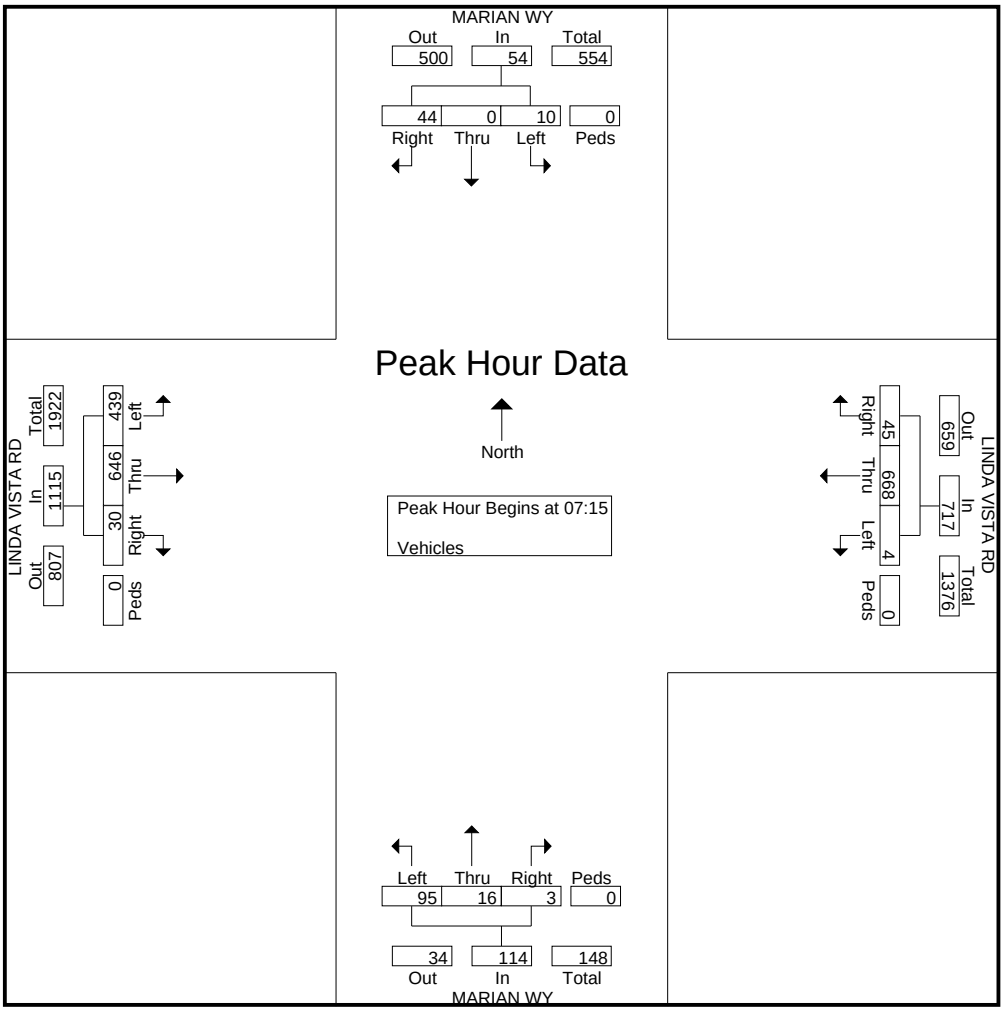

True Count

6520 Lemarand Ave
San Diego, CA 92115

File Name : 21.MARIAN WAY.LINDA VISTA RD
Site Code : 00000000
Start Date : 2/5/2013
Page No : 3

	MARIAN WY Southbound					LINDA VISTA RD Westbound					MARIAN WY Northbound					LINDA VISTA RD Eastbound					
Start Time	**Left**	**Thru**	**Right**	**Peds**	**App. Total**	**Left**	**Thru**	**Right**	**Peds**	**App. Total**	**Left**	**Thru**	**Right**	**Peds**	**App. Total**	**Left**	**Thru**	**Right**	**Peds**	**App. Total**	**Int. Total**
Peak Hour Analysis From 12:00 to 17:45 - Peak 1 of 1																					
Peak Hour for Entire Intersection Begins at 16:45																					
16:45	18	3	94	0	115	1	179	7	0	187	18	1	3	0	22	38	205	24	0	267	591
17:00	24	5	67	0	96	2	183	6	0	191	14	1	2	0	17	82	211	30	0	323	627
17:15	36	7	117	0	160	0	217	20	0	237	19	2	3	0	24	69	221	21	0	311	732
17:30	44	6	168	0	218	2	194	9	0	205	17	3	2	0	22	67	187	19	0	273	718
Total Volume	122	21	446	0	589	5	773	42	0	820	68	7	10	0	85	256	824	94	0	1174	2668
% App. Total	20.7	3.6	75.7	0		0.6	94.3	5.1	0		80	8.2	11.8	0		21.8	70.2	8	0		
PHF	.693	.750	.664	.000	.675	.625	.891	.525	.000	.865	.895	.583	.833	.000	.885	.780	.932	.783	.000	.909	.911

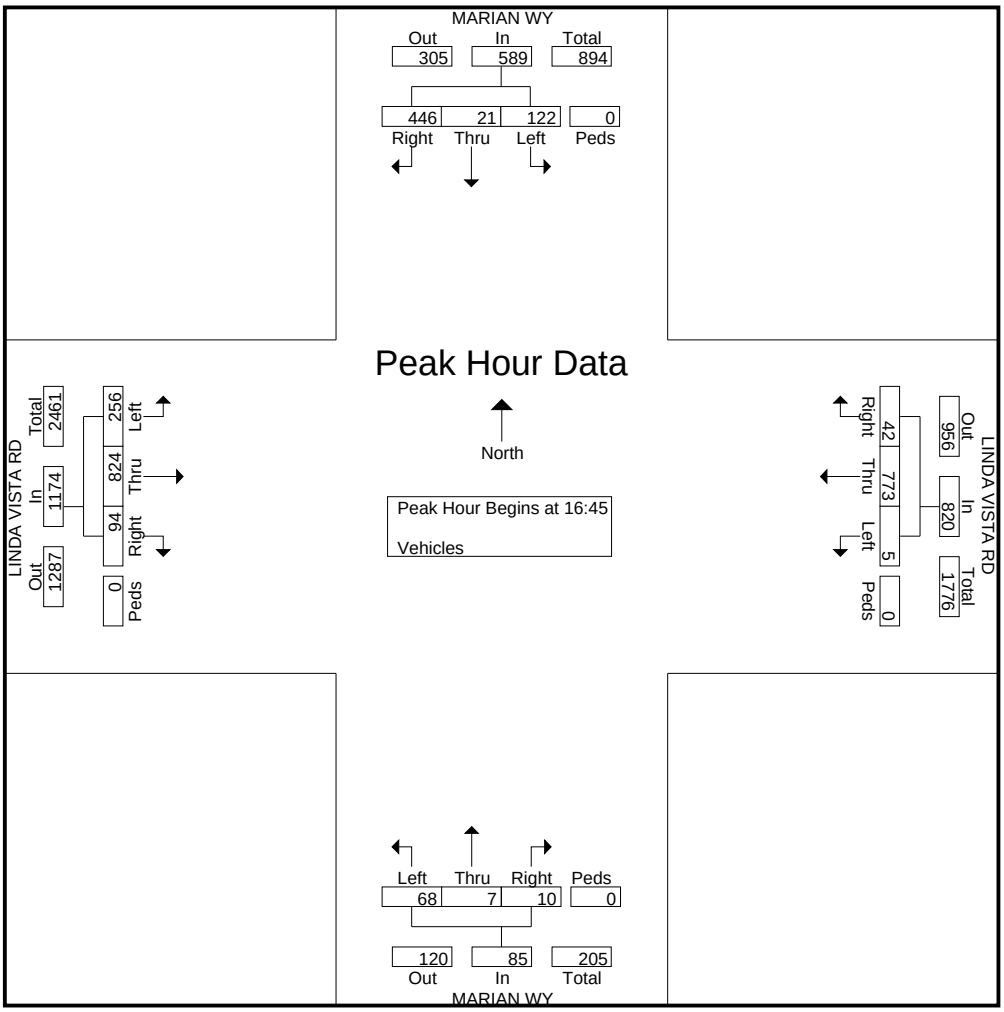

Turn Count Summary

Accurate Video Counts Inc
info@accuratevideocounts.com
(619) 987-5136

Location: Linda Vista Road @ Colusa Street

Date of Count: *Wednesday, May 07, 2014*

Analysts: *LV/CD*

Weather: *Sunny*

AVC Proj No: *14-0199*

Vehicular Count

Accurate Video Counts Inc
info@accuratevideocounts.com
(619) 987-5136

Location: Linda Vista Road @ Colusa Street

AM Period (7:00 AM - 9:00 AM)								
		Westbound		Northbound		Eastbound		
		Thru	Left	Right	Left	Right	Thru	TOTAL
7:00 AM		113	2	4	11	4	78	212
7:15 AM		116	2	13	10	3	128	272
7:30 AM		154	8	11	11	3	156	343
7:45 AM		188	11	12	13	5	158	387
8:00 AM		153	6	4	8	4	115	290
8:15 AM		141	4	5	9	3	117	279
8:30 AM		139	5	1	10	1	94	250
8:45 AM		141	8	5	10	1	134	299
Total		1,145	46	55	82	24	980	2,332

AM Intersection Peak Hour : **7:30 AM - 8:30 AM** Intersection PHF : **0.84**

		Westbound		Northbound		Eastbound		TOTAL
		Thru	Left	Right	Left	Right	Thru	
Volume		636	29	32	41	15	546	1,299
PHF		0.85	0.66	0.67	0.79	0.75	0.86	0.84
Movement PHF		0.84		0.73			0.86	0.84

PM Period (4:00 PM - 6:00 PM)								
		Westbound		Northbound		Eastbound		
		Thru	Left	Right	Left	Right	Thru	TOTAL
4:00 PM		149	9	6	4	13	174	355
4:15 PM		137	4	6	10	2	199	358
4:30 PM		142	6	9	8	8	192	365
4:45 PM		169	13	10	4	10	205	411
5:00 PM		190	10	5	5	10	220	440
5:15 PM		184	11	8	5	17	237	462
5:30 PM		198	5	4	2	6	218	433
5:45 PM		188	14	6	8	9	194	419
Total		1,357	72	54	46	75	1,639	3,243

PM Intersection Peak Hour : **5:00 PM - 6:00 PM** Intersection PHF : **0.95**

		Westbound		Northbound		Eastbound		TOTAL
		Thru	Left	Right	Left	Right	Thru	
Volume		760	40	23	20	42	869	1754
PHF		0.96	0.714	0.719	0.625	0.618	0.917	0.95
Movement PHF		0.99		0.77			0.90	0.95

Turn Count Summary

Accurate Video Counts Inc
info@accuratevideocounts.com
(619) 987-5136

Location: Linda Vista Road @ Alcala Parkway

Date of Count: *Wednesday, May 07, 2014*

Analysts: *LV/CD*

Weather: *Sunny*

AVC Proj No: *14-0199*

Vehicular Count

Accurate Video Counts Inc
info@accuratevideocounts.com
(619) 987-5136

Location: Linda Vista Road @ Alcala Parkway

AM Period (7:00 AM - 9:00 AM)													
	Southbound			Westbound			Northbound			Eastbound			
	Right	Thru	Left	Right	Thru	Left	Right	Thru	Left	Right	Thru	Left	TOTAL
7:00 AM	2	0	5	28	99	0	5	0	7	7	69	23	245
7:15 AM	4	0	2	36	118	1	8	2	13	3	113	42	342
7:30 AM	17	1	2	50	189	2	4	2	15	2	147	40	471
7:45 AM	9	0	10	60	213	0	7	1	9	6	108	74	497
8:00 AM	5	1	5	59	151	1	5	0	11	3	74	68	383
8:15 AM	17	2	7	62	119	0	8	0	6	3	60	51	335
8:30 AM	9	0	18	59	146	4	5	3	14	6	62	72	398
8:45 AM	11	1	10	50	154	8	13	5	15	9	65	88	429
Total	74	5	59	404	1,189	16	55	13	90	39	698	458	3,100

AM Intersection Peak Hour : **7:15 AM - 8:15 AM** Intersection PHF : **0.85**

	Southbound			Westbound			Northbound			Eastbound			TOTAL
	Right	Thru	Left	Right	Thru	Left	Right	Thru	Left	Right	Thru	Left	
Volume	35	2	19	205	671	4	24	5	48	14	442	224	1,693
PHF	0.51	0.50	0.48	0.85	0.79	0.50	0.75	0.63	0.80	0.58	0.75	0.76	0.85
Movement PHF		0.70			0.81			0.84			0.90		0.85

PM Period (4:00 PM - 6:00 PM)													
	Southbound			Westbound			Northbound			Eastbound			
	Right	Thru	Left	Right	Thru	Left	Right	Thru	Left	Right	Thru	Left	TOTAL
4:00 PM	52	2	44	29	118	10	9	3	11	10	155	25	468
4:15 PM	35	2	30	22	97	6	11	3	20	23	177	20	446
4:30 PM	44	2	51	20	113	9	14	1	9	10	168	26	467
4:45 PM	39	2	41	22	139	9	8	2	16	18	163	39	498
5:00 PM	68	6	71	49	143	18	6	9	13	18	177	31	609
5:15 PM	54	5	65	35	121	9	11	11	13	23	171	60	578
5:30 PM	53	4	48	27	148	7	15	9	10	14	179	46	560
5:45 PM	49	4	36	24	152	10	8	14	11	15	159	38	520
Total	394	27	386	228	1,031	78	82	52	103	131	1,349	285	4,146

PM Intersection Peak Hour : **5:00 PM - 6:00 PM** Intersection PHF : **0.93**

	Southbound			Westbound			Northbound			Eastbound			TOTAL
	Right	Thru	Left	Right	Thru	Left	Right	Thru	Left	Right	Thru	Left	
Volume	224	19	220	135	564	44	40	43	47	70	686	175	2267
PHF	0.82	0.792	0.775	0.689	0.928	0.611	0.667	0.768	0.904	0.761	0.958	0.729	0.93
Movement PHF		0.80			0.88			0.93			0.92		0.93

Turn Count Summary

Accurate Video Counts Inc
info@accuratevideocounts.com
(619) 987-5136

Location: Linda Vista Road @ Alcala Apartments Entrance

Date of Count: *Wednesday, May 07, 2014*

Analysts: *LV/CD*

Weather: *Sunny*

AVC Proj No: *14-0199*

Vehicular Count

Accurate Video Counts Inc
info@accuratevideocounts.com
(619) 987-5136

Location: Linda Vista Road @ Alcala Apartments Entrance

AM Period (7:00 AM - 9:00 AM)								
	Southbound		Westbound			Eastbound		
	Right	Left	Right	Thru		Thru	Left	TOTAL
7:00 AM	4	1	2	123		73	6	209
7:15 AM	6	1	4	149		116	7	283
7:30 AM	9	3	1	232		148	5	398
7:45 AM	9	1	1	264		117	8	400
8:00 AM	10	3	6	201		77	7	304
8:15 AM	8	2	6	173		68	7	264
8:30 AM	12	0	9	197		75	10	303
8:45 AM	19	1	7	193		77	11	308
Total	77	12	36	1,532		751	61	2,469

AM Intersection Peak Hour : **7:15 AM - 8:15 AM** Intersection PHF : **0.87**

	Southbound		Westbound			Eastbound		TOTAL
	Right	Left	Right	Thru		Thru	Left	
Volume	34	8	12	846		458	27	1,385
PHF	0.85	0.67	0.50	0.80		0.77	0.84	0.87
Movement PHF	0.81			0.81		0.79		0.87

PM Period (4:00 PM - 6:00 PM)								
	Southbound		Westbound			Eastbound		
	Right	Left	Right	Thru		Thru	Left	TOTAL
4:00 PM	7	11	5	150		203	5	381
4:15 PM	15	7	3	110		209	9	353
4:30 PM	16	5	7	126		220	13	387
4:45 PM	16	6	7	154		199	13	395
5:00 PM	19	9	7	191		242	12	480
5:15 PM	21	9	2	144		232	15	423
5:30 PM	14	6	4	168		231	11	434
5:45 PM	20	6	2	166		184	19	397
Total	128	59	37	1,209		1,720	97	3,250

PM Intersection Peak Hour : **5:00 PM - 6:00 PM** Intersection PHF : **0.90**

	Southbound		Westbound			Eastbound		TOTAL
	Right	Left	Right	Thru		Thru	Left	
Volume	74	30	15	669		889	57	1734
PHF	0.88	0.833	0.536	0.876		0.918	0.75	0.90
Movement PHF	0.87			0.86		0.93		0.90

Turn Count Summary

Accurate Video Counts Inc
info@accuratevideocounts.com
(619) 987-5136

Location: Linda Vista Road @ Via Las Cumbres

Date of Count: *Wednesday, May 07, 2014*

Analysts: *LV/CD*

Weather: *Sunny*

AVC Proj No: *14-0199*

Vehicular Count

Accurate Video Counts Inc
info@accuratevideocounts.com
(619) 987-5136

Location: Linda Vista Road @ Via Las Cumbres

AM Period (7:00 AM - 9:00 AM)													
	Southbound			Westbound			Northbound			Eastbound			
	Right	Thru	Left	Right	Thru	Left	Right	Thru	Left	Right	Thru	Left	TOTAL
7:00 AM	13	13	4	1	98	15	38	2	14	7	65	2	272
7:15 AM	13	6	6	1	122	14	55	5	18	6	106	5	357
7:30 AM	15	17	16	4	177	27	107	3	41	5	144	2	558
7:45 AM	21	14	6	6	202	35	99	4	42	6	111	1	547
8:00 AM	10	6	4	6	150	39	11	4	47	10	67	3	357
8:15 AM	16	14	8	4	117	21	21	7	46	9	58	3	324
8:30 AM	18	10	5	7	134	18	17	3	54	13	58	4	341
8:45 AM	6	12	6	0	139	15	19	6	55	10	62	6	336
Total	112	92	55	29	1,139	184	367	34	317	66	671	26	3,092

AM Intersection Peak Hour : **7:15 AM - 8:15 AM** Intersection PHF : **0.81**

	Southbound			Westbound			Northbound			Eastbound			TOTAL
	Right	Thru	Left	Right	Thru	Left	Right	Thru	Left	Right	Thru	Left	
Volume	59	43	32	17	651	115	272	16	148	27	428	11	1,819
PHF	0.70	0.63	0.50	0.71	0.81	0.74	0.64	0.80	0.79	0.68	0.74	0.55	0.81
Movement PHF		0.70			0.81			0.72			0.77		0.81

PM Period (4:00 PM - 6:00 PM)													
	Southbound			Westbound			Northbound			Eastbound			
	Right	Thru	Left	Right	Thru	Left	Right	Thru	Left	Right	Thru	Left	TOTAL
4:00 PM	9	3	6	6	117	18	34	10	29	52	154	8	446
4:15 PM	5	6	7	6	87	20	32	12	21	32	177	7	412
4:30 PM	6	3	8	3	102	24	45	15	25	44	173	8	456
4:45 PM	7	2	3	9	122	24	32	16	32	49	146	10	452
5:00 PM	7	6	8	3	144	46	33	10	47	59	181	11	555
5:15 PM	3	4	2	8	113	30	53	7	30	67	165	9	491
5:30 PM	7	2	6	6	146	35	28	17	19	70	158	9	503
5:45 PM	10	5	4	17	129	43	35	9	29	31	139	20	471
Total	54	31	44	58	960	240	292	96	232	404	1,293	82	3,786

PM Intersection Peak Hour : **5:00 PM - 6:00 PM** Intersection PHF : **0.91**

	Southbound			Westbound			Northbound			Eastbound			TOTAL
	Right	Thru	Left	Right	Thru	Left	Right	Thru	Left	Right	Thru	Left	
Volume	27	17	20	34	532	154	149	43	125	227	643	49	2020
PHF	0.68	0.708	0.625	0.5	0.911	0.837	0.703	0.632	0.665	0.811	0.888	0.613	0.91
Movement PHF		0.76			0.93			0.88			0.92		0.91

Turn Count Summary

Accurate Video Counts Inc
info@accuratevideocounts.com
(619) 987-5136

Location: Kramer Street @ Linda Vista Road

Date of Count: *Wednesday, May 07, 2014*

Analysts: *LV/CD*

Weather: *Sunny*

AVC Proj No: *14-0199*

Vehicular Count

Accurate Video Counts Inc
info@accuratevideocounts.com
(619) 987-5136

Location: Kramer Street @ Linda Vista Road

AM Period (7:00 AM - 9:00 AM)													
	Southbound			Westbound			Northbound			Eastbound			
	Right	Thru	Left	Right	Thru	Left	Right	Thru	Left	Right	Thru	Left	TOTAL
7:00 AM	0	96	1	6	0	16	11	74	2	2	4	5	217
7:15 AM	1	120	9	4	3	13	14	88	0	9	12	6	279
7:30 AM	2	168	24	12	6	22	17	116	0	9	22	6	404
7:45 AM	2	152	11	15	6	19	20	138	3	10	10	4	390
8:00 AM	3	111	2	10	2	12	5	96	2	15	1	4	263
8:15 AM	2	120	4	6	1	6	6	122	1	8	1	3	280
8:30 AM	1	144	3	6	1	6	8	93	6	9	1	1	279
8:45 AM	4	129	5	6	1	4	6	93	1	5	3	4	261
Total	15	1,040	59	65	20	98	87	820	15	67	54	33	2,373

AM Intersection Peak Hour : **7:30 AM - 8:30 AM** Intersection PHF : **0.83**

	Southbound			Westbound			Northbound			Eastbound			TOTAL
	Right	Thru	Left	Right	Thru	Left	Right	Thru	Left	Right	Thru	Left	
Volume	9	551	41	43	15	59	48	472	6	42	34	17	1,337
PHF	0.75	0.82	0.43	0.72	0.63	0.67	0.60	0.86	0.50	0.70	0.39	0.71	0.83
Movement PHF		0.77			0.73			0.82			0.63		0.83

PM Period (4:00 PM - 6:00 PM)													
	Southbound			Westbound			Northbound			Eastbound			
	Right	Thru	Left	Right	Thru	Left	Right	Thru	Left	Right	Thru	Left	TOTAL
4:00 PM	0	116	4	5	3	12	18	155	2	2	3	3	323
4:15 PM	2	119	2	2	4	7	18	154	3	6	2	2	321
4:30 PM	1	143	6	1	5	13	18	196	4	5	2	2	396
4:45 PM	1	146	10	5	1	9	19	148	14	8	4	2	367
5:00 PM	2	148	11	7	5	9	21	172	8	4	2	2	391
5:15 PM	3	175	6	6	6	10	13	175	8	1	4	1	408
5:30 PM	2	188	5	4	4	9	11	159	5	6	4	4	401
5:45 PM	5	158	5	8	6	11	17	138	11	6	4	3	372
Total	16	1193	49	38	34	80	135	1,297	55	38	25	19	2,979

PM Intersection Peak Hour : **5:00 PM - 6:00 PM** Intersection PHF : **0.96**

	Southbound			Westbound			Northbound			Eastbound			TOTAL
	Right	Thru	Left	Right	Thru	Left	Right	Thru	Left	Right	Thru	Left	
Volume	12	669	27	25	21	39	62	644	32	17	14	10	1572
PHF	0.60	0.89	0.614	0.781	0.875	0.886	0.738	0.92	0.727	0.708	0.875	0.625	0.96
Movement PHF		0.91			0.85			0.92			0.73		0.96

Turn Count Summary

Accurate Video Counts Inc
info@accuratevideocounts.com
(619) 987-5136

Location: Comstock Street @ Linda Vista Road

Date of Count: *Wednesday, May 07, 2014*

Analysts: *LV/CD*

Weather: *Sunny*

AVC Proj No: *14-0199*

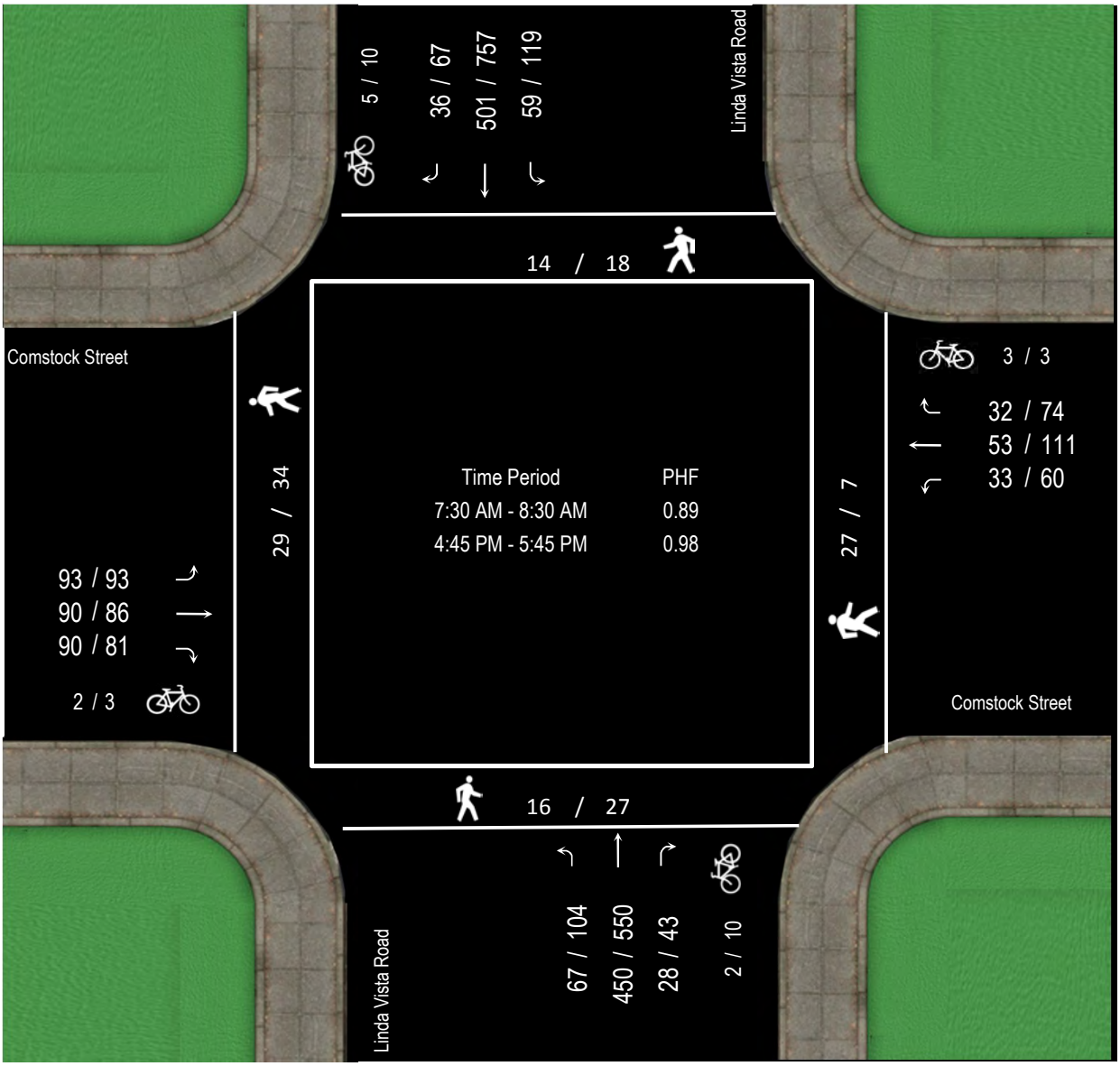

Vehicular Count

Accurate Video Counts Inc
info@accuratevideocounts.com
(619) 987-5136

Location: Comstock Street @ Linda Vista Road

AM Period (7:00 AM - 9:00 AM)													
	Southbound			Westbound			Northbound			Eastbound			
	Right	Thru	Left	Right	Thru	Left	Right	Thru	Left	Right	Thru	Left	TOTAL
7:00 AM	12	89	4	4	13	10	0	91	9	13	16	18	279
7:15 AM	4	117	10	11	12	10	4	99	7	21	27	23	345
7:30 AM	9	162	18	8	12	9	4	92	12	27	18	29	400
7:45 AM	6	136	18	2	13	6	10	155	20	21	27	18	432
8:00 AM	9	96	12	11	12	4	10	91	16	18	19	24	322
8:15 AM	12	107	11	11	16	14	4	112	19	24	26	22	378
8:30 AM	12	88	13	11	12	11	9	89	8	21	30	26	330
8:45 AM	12	108	15	5	14	5	7	85	12	26	19	16	324
Total	76	903	101	63	104	69	48	814	103	171	182	176	2,810

AM Intersection Peak Hour : **7:30 AM - 8:30 AM** Intersection PHF : **0.89**

	Southbound			Westbound			Northbound			Eastbound			TOTAL
	Right	Thru	Left	Right	Thru	Left	Right	Thru	Left	Right	Thru	Left	
Volume	36	501	59	32	53	33	28	450	67	90	90	93	1,532
PHF	0.75	0.77	0.82	0.73	0.83	0.59	0.70	0.73	0.84	0.83	0.83	0.80	0.89
Movement PHF		0.79			0.72			0.74			0.92		0.89

PM Period (4:00 PM - 6:00 PM)													
	Southbound			Westbound			Northbound			Eastbound			
	Right	Thru	Left	Right	Thru	Left	Right	Thru	Left	Right	Thru	Left	TOTAL
4:00 PM	24	155	32	19	21	15	10	145	23	13	41	28	526
4:15 PM	25	131	26	24	24	20	10	134	29	18	31	18	490
4:30 PM	20	159	25	19	34	21	16	140	23	15	29	19	520
4:45 PM	12	185	22	20	30	25	12	143	21	19	21	24	534
5:00 PM	19	172	43	23	27	14	9	142	34	21	21	21	546
5:15 PM	15	176	27	15	29	16	11	143	28	17	28	24	529
5:30 PM	21	224	27	16	25	5	11	122	21	24	16	24	536
5:45 PM	30	194	19	11	20	10	5	123	24	19	28	11	494
Total	166	1396	221	147	210	126	84	1,092	203	146	215	169	4,175

PM Intersection Peak Hour : **4:45 PM - 5:45 PM** Intersection PHF : **0.98**

	Southbound			Westbound			Northbound			Eastbound			TOTAL
	Right	Thru	Left	Right	Thru	Left	Right	Thru	Left	Right	Thru	Left	
Volume	67	757	119	74	111	60	43	550	104	81	86	93	2145
PHF	0.80	0.845	0.692	0.804	0.925	0.6	0.896	0.962	0.765	0.844	0.768	0.969	0.98
Movement PHF		0.87			0.82			0.94			0.94		0.98

Turn Count Summary

Accurate Video Counts Inc
info@accuratevideocounts.com
(619) 987-5136

Location: Ulric Street @ Linda Vista Road

Date of Count: *Wednesday, May 07, 2014*

Analysts: *LV/CD*

Weather: *Sunny*

AVC Proj No: *14-0199*

Vehicular Count

Accurate Video Counts Inc
info@accuratevideocounts.com
(619) 987-5136

Location: Ulric Street @ Linda Vista Road

AM Period (7:00 AM - 9:00 AM)													
	Southbound			Westbound			Northbound			Eastbound			
	Right	Thru	Left	Right	Thru	Left	Right	Thru	Left	Right	Thru	Left	TOTAL
7:00 AM	4	85	16	41	17	5	5	97	6	19	20	15	330
7:15 AM	2	119	18	43	18	10	10	105	7	16	10	18	376
7:30 AM	2	141	16	51	11	11	9	147	9	13	15	15	440
7:45 AM	10	145	32	59	32	13	9	168	12	13	19	26	538
8:00 AM	7	110	36	44	18	8	15	112	14	10	31	19	424
8:15 AM	7	115	30	71	28	9	7	136	13	14	17	22	469
8:30 AM	10	144	48	57	32	11	7	129	11	6	26	49	530
8:45 AM	4	128	35	30	26	6	11	111	12	11	27	29	430
Total	46	987	231	396	182	73	73	1,005	84	102	165	193	3,537

AM Intersection Peak Hour : **7:45 AM - 8:45 AM** Intersection PHF : **0.91**

	Southbound			Westbound			Northbound			Eastbound			TOTAL
	Right	Thru	Left	Right	Thru	Left	Right	Thru	Left	Right	Thru	Left	
Volume	34	514	146	231	110	41	38	545	50	43	93	116	1,961
PHF	0.85	0.89	0.76	0.81	0.86	0.79	0.63	0.81	0.89	0.77	0.75	0.59	0.91
Movement PHF		0.86			0.88			0.84			0.78		0.91

PM Period (4:00 PM - 6:00 PM)													
	Southbound			Westbound			Northbound			Eastbound			
	Right	Thru	Left	Right	Thru	Left	Right	Thru	Left	Right	Thru	Left	TOTAL
4:00 PM	14	137	52	33	22	14	24	145	5	10	25	20	501
4:15 PM	11	177	60	30	20	17	18	150	20	8	23	10	544
4:30 PM	18	208	84	39	30	17	11	195	14	15	36	16	683
4:45 PM	9	165	65	39	28	17	17	170	12	9	38	16	585
5:00 PM	20	201	78	39	26	5	13	173	17	11	39	20	642
5:15 PM	16	195	85	41	23	9	11	151	17	9	32	17	606
5:30 PM	13	236	90	48	35	11	10	169	15	11	26	25	689
5:45 PM	15	178	89	40	28	10	14	168	18	14	38	18	630
Total	116	1497	603	309	212	100	118	1,321	118	87	257	142	4,880

PM Intersection Peak Hour : **5:00 PM - 6:00 PM** Intersection PHF : **0.93**

	Southbound			Westbound			Northbound			Eastbound			TOTAL
	Right	Thru	Left	Right	Thru	Left	Right	Thru	Left	Right	Thru	Left	
Volume	64	810	342	168	112	35	48	661	67	45	135	80	2567
PHF	0.80	0.858	0.95	0.875	0.8	0.795	0.857	0.955	0.931	0.804	0.865	0.8	0.93
Movement PHF		0.90			0.84			0.96			0.93		0.93

Turn Count Summary

Accurate Video Counts Inc
info@accuratevideocounts.com
(619) 987-5136

Location: Genesee Avenue @ Linda Vista Road

Date of Count: *Wednesday, May 07, 2014*

Analysts: *LV/CD*

Weather: *Sunny*

AVC Proj No: *14-0199*

Vehicular Count

Accurate Video Counts Inc
info@accuratevideocounts.com
(619) 987-5136

Location: Genesee Avenue @ Linda Vista Road

AM Period (7:00 AM - 9:00 AM)													
	Southbound			Westbound			Northbound			Eastbound			
	Right	Thru	Left	Right	Thru	Left	Right	Thru	Left	Right	Thru	Left	TOTAL
7:00 AM	14	27	29	17	85	84	85	58	48	27	110	15	599
7:15 AM	14	55	18	36	85	84	100	60	47	29	113	20	661
7:30 AM	17	80	18	37	112	125	77	115	63	35	111	22	812
7:45 AM	22	101	28	75	115	113	94	185	49	42	131	40	995
8:00 AM	28	109	28	40	117	69	72	122	62	48	95	19	809
8:15 AM	18	121	15	47	149	94	120	118	59	66	114	34	955
8:30 AM	35	133	28	30	103	92	90	152	70	54	98	37	922
8:45 AM	24	76	18	36	97	86	73	111	47	47	97	29	741
Total	172	702	182	318	863	747	711	921	445	348	869	216	6,494

AM Intersection Peak Hour : **7:45 AM - 8:45 AM** Intersection PHF : **0.92**

	Southbound			Westbound			Northbound			Eastbound			TOTAL
	Right	Thru	Left	Right	Thru	Left	Right	Thru	Left	Right	Thru	Left	
Volume	103	464	99	192	484	368	376	577	240	210	438	130	3,681
PHF	0.74	0.87	0.88	0.64	0.81	0.81	0.78	0.78	0.86	0.80	0.84	0.81	0.92
Movement PHF		0.85			0.86			0.91			0.91		0.92

PM Period (4:00 PM - 6:00 PM)													
	Southbound			Westbound			Northbound			Eastbound			
	Right	Thru	Left	Right	Thru	Left	Right	Thru	Left	Right	Thru	Left	TOTAL
4:00 PM	33	111	27	45	104	93	111	101	48	64	117	26	880
4:15 PM	26	134	23	43	123	125	108	85	45	72	90	27	901
4:30 PM	20	115	22	34	108	125	93	136	55	72	94	13	887
4:45 PM	26	111	38	47	117	110	88	105	50	71	86	21	870
5:00 PM	21	162	34	29	119	105	124	123	56	81	95	13	962
5:15 PM	31	157	25	28	124	144	102	102	46	80	87	27	953
5:30 PM	30	143	17	29	139	162	104	101	52	89	127	25	1,018
5:45 PM	30	142	33	41	136	141	87	121	46	79	70	26	952
Total	217	1075	219	296	970	1,005	817	874	398	608	766	178	7,423

PM Intersection Peak Hour : **5:00 PM - 6:00 PM** Intersection PHF : **0.95**

	Southbound			Westbound			Northbound			Eastbound			TOTAL
	Right	Thru	Left	Right	Thru	Left	Right	Thru	Left	Right	Thru	Left	
Volume	112	604	109	127	518	552	417	447	200	329	379	91	3885
PHF	0.90	0.932	0.801	0.774	0.932	0.852	0.841	0.909	0.893	0.924	0.746	0.843	0.95
Movement PHF		0.95			0.91			0.88			0.83		0.95

Turn Count Summary

Accurate Video Counts Inc
info@accuratevideocounts.com
(619) 987-5136

Location: Friars Road @ Sea World Drive

Date of Count: *Thursday, May 08, 2014*

Analysts: *LV/CD*

Weather: *Sunny*

AVC Proj No: *14-0199*

Vehicular Count

Accurate Video Counts Inc
info@accuratevideocounts.com
(619) 987-5136

Location: Friars Road @ Sea World Drive

AM Period (7:00 AM - 9:00 AM)								
	Southbound		Westbound		Northbound			
	Thru	Left	Right	Left	Right	Thru		TOTAL
7:00 AM	123	19	45	54	61	234		536
7:15 AM	138	36	42	58	86	264		624
7:30 AM	143	62	41	53	144	291		734
7:45 AM	168	44	45	74	100	347		778
8:00 AM	170	19	42	62	69	317		679
8:15 AM	163	22	28	56	74	313		656
8:30 AM	151	22	31	57	92	289		642
8:45 AM	180	20	23	58	171	269		721
Total	1,236	244	297	472	797	2,324		5,370

AM Intersection Peak Hour : **7:30 AM - 8:30 AM** Intersection PHF : **0.91**

	Southbound		Westbound		Northbound			TOTAL
	Thru	Left	Right	Left	Right	Thru		
Volume	644	147	156	245	387	1,268		2,847
PHF	0.95	0.59	0.87	0.83	0.67	0.91		0.91
Movement PHF	0.93		0.84			0.93		0.91

PM Period (4:00 PM - 6:00 PM)								
	Southbound		Westbound		Northbound			
	Thru	Left	Right	Left	Right	Thru		TOTAL
4:00 PM	262	69	23	95	103	253		805
4:15 PM	244	105	17	69	149	251		835
4:30 PM	302	78	20	107	147	262		916
4:45 PM	296	83	28	90	181	270		948
5:00 PM	297	96	44	145	167	307		1,056
5:15 PM	309	92	32	111	205	315		1,064
5:30 PM	321	79	22	152	127	322		1,023
5:45 PM	287	82	32	97	102	237		837
Total	2318	684	218	866	1,181	2,217		7,484

PM Intersection Peak Hour : **4:45 PM - 5:45 PM** Intersection PHF : **0.96**

	Southbound		Westbound		Northbound			TOTAL
	Thru	Left	Right	Left	Right	Thru		
Volume	1223	350	126	498	680	1214		4091
PHF	0.952	0.911	0.716	0.819	0.829	0.943		0.96
Movement PHF	0.98		0.83			0.91		0.96

True Count

6520 Lemarand Ave
San Diego, CA 92115

File Name : 23.NAPA ST.FRIARS RD
Site Code : 00000000
Start Date : 2/5/2013
Page No : 1

Groups Printed- Vehicles

	NAPA ST Southbound				FRIARS RD Westbound				Northbound				FRIARS RD Eastbound				
Start Time	Left	Thru	Right	Peds	Left	Thru	Right	Peds	Left	Thru	Right	Peds	Left	Thru	Right	Peds	Int. Total
07:00	25	0	4	0	0	54	60	0	0	0	0	0	21	38	0	0	202
07:15	42	0	12	0	0	72	69	0	0	0	0	0	69	62	0	0	326
07:30	34	0	13	0	0	93	99	0	0	0	0	0	78	90	0	0	407
07:45	39	0	11	0	0	75	140	0	0	0	0	0	44	113	0	0	422
Total	140	0	40	0	0	294	368	0	0	0	0	0	212	303	0	0	1357
08:00	52	0	13	0	0	80	88	0	0	0	0	0	33	60	0	0	326
08:15	54	0	4	0	0	72	88	0	0	0	0	0	39	57	0	0	314
08:30	50	0	5	0	0	56	99	0	0	0	0	0	81	80	0	0	371
08:45	36	0	13	0	0	77	72	0	0	0	0	0	132	143	0	0	473
Total	192	0	35	0	0	285	347	0	0	0	0	0	285	340	0	0	1484
*** BREAK ***																	
16:00	102	0	52	0	0	77	62	0	0	0	0	0	20	121	0	0	434
16:15	68	0	30	0	0	74	50	0	0	0	0	0	19	117	0	0	358
16:30	82	0	37	0	0	80	72	0	0	0	0	0	38	127	0	0	436
16:45	123	0	36	0	0	61	72	0	0	0	0	0	40	171	0	0	503
Total	375	0	155	0	0	292	256	0	0	0	0	0	117	536	0	0	1731
17:00	108	0	31	0	0	95	82	0	0	0	0	0	42	156	0	0	514
17:15	130	0	54	0	0	91	69	0	0	0	0	0	34	182	0	0	560
17:30	99	0	100	0	0	95	68	0	0	0	0	0	33	154	0	0	549
17:45	114	0	45	0	0	78	67	0	0	0	0	0	38	151	0	0	493
Total	451	0	230	0	0	359	286	0	0	0	0	0	147	643	0	0	2116
Grand Total	1158	0	460	0	0	1230	1257	0	0	0	0	0	761	1822	0	0	6688
Apprch %	71.6	0	28.4	0	0	49.5	50.5	0	0	0	0	0	29.5	70.5	0	0	
Total %	17.3	0	6.9	0	0	18.4	18.8	0	0	0	0	0	11.4	27.2	0	0	

True Count

6520 Lemarand Ave
San Diego, CA 92115

File Name : 23.NAPA ST.FRIARS RD
Site Code : 00000000
Start Date : 2/5/2013
Page No : 2

	NAPA ST Southbound					FRIARS RD Westbound					Northbound					FRIARS RD Eastbound					
Start Time	**Left**	**Thru**	**Right**	**Peds**	**App. Total**	**Left**	**Thru**	**Right**	**Peds**	**App. Total**	**Left**	**Thru**	**Right**	**Peds**	**App. Total**	**Left**	**Thru**	**Right**	**Peds**	**App. Total**	**Int. Total**
Peak Hour Analysis From 07:00 to 11:45 - Peak 1 of 1																					
Peak Hour for Entire Intersection Begins at 08:00																					
08:00	52	0	13	0	65	0	80	88	0	168	0	0	0	0	0	33	60	0	0	93	326
08:15	54	0	4	0	58	0	72	88	0	160	0	0	0	0	0	39	57	0	0	96	314
08:30	50	0	5	0	55	0	56	99	0	155	0	0	0	0	0	81	80	0	0	161	371
08:45	36	0	13	0	49	0	77	72	0	149	0	0	0	0	0	132	143	0	0	275	473
Total Volume	192	0	35	0	227	0	285	347	0	632	0	0	0	0	0	285	340	0	0	625	1484
% App. Total	84.6	0	15.4	0		0	45.1	54.9	0		0	0	0	0		45.6	54.4	0	0		
PHF	.889	.000	.673	.000	.873	.000	.891	.876	.000	.940	.000	.000	.000	.000	.000	.540	.594	.000	.000	.568	.784

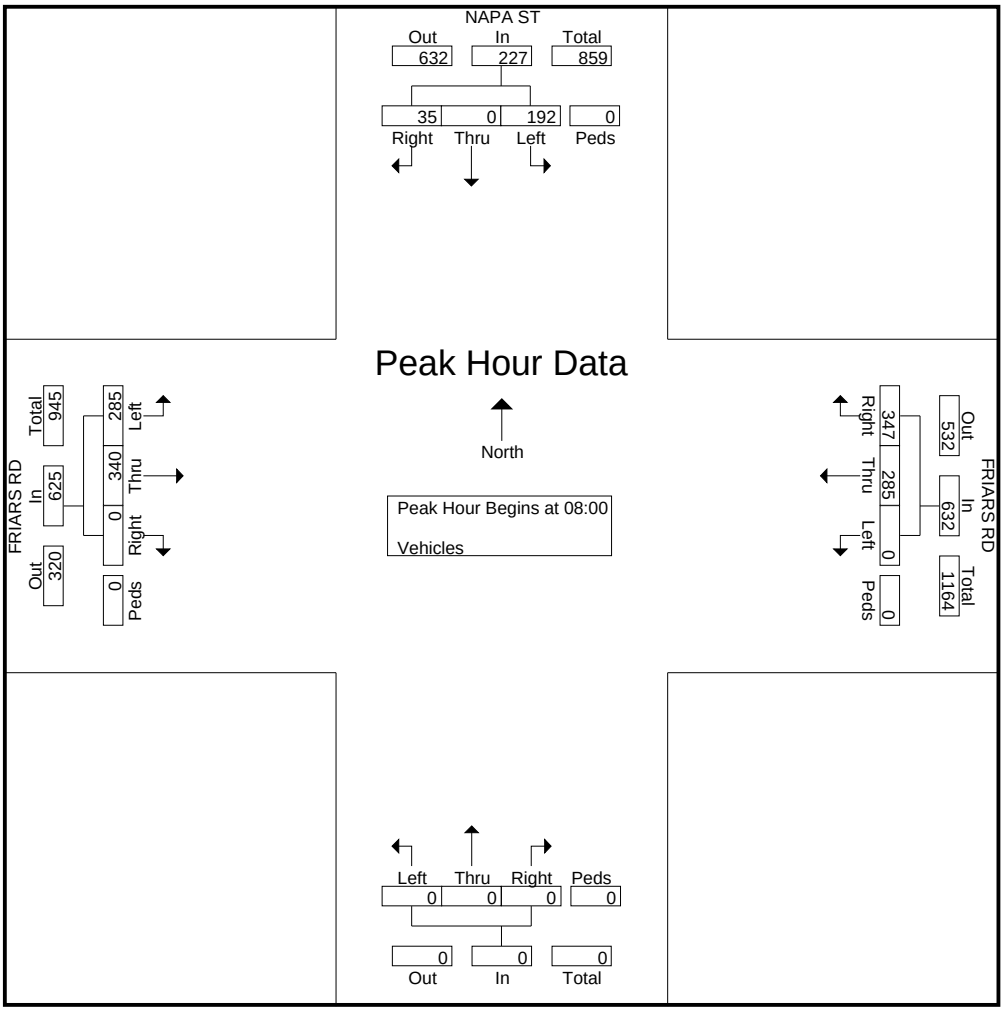

True Count

6520 Lemarand Ave
San Diego, CA 92115

File Name : 23.NAPA ST.FRIARS RD
Site Code : 00000000
Start Date : 2/5/2013
Page No : 3

	NAPA ST Southbound					FRIARS RD Westbound					Northbound					FRIARS RD Eastbound					
Start Time	**Left**	**Thru**	**Right**	**Peds**	**App. Total**	**Left**	**Thru**	**Right**	**Peds**	**App. Total**	**Left**	**Thru**	**Right**	**Peds**	**App. Total**	**Left**	**Thru**	**Right**	**Peds**	**App. Total**	**Int. Total**
Peak Hour Analysis From 12:00 to 17:45 - Peak 1 of 1																					
Peak Hour for Entire Intersection Begins at 16:45																					
16:45	123	0	36	0	159	0	61	72	0	133	0	0	0	0	0	40	171	0	0	211	503
17:00	108	0	31	0	139	0	95	82	0	177	0	0	0	0	0	42	156	0	0	198	514
17:15	130	0	54	0	184	0	91	69	0	160	0	0	0	0	0	34	182	0	0	216	560
17:30	99	0	100	0	199	0	95	68	0	163	0	0	0	0	0	33	154	0	0	187	549
Total Volume	460	0	221	0	681	0	342	291	0	633	0	0	0	0	0	149	663	0	0	812	2126
% App. Total	67.5	0	32.5	0		0	54	46	0		0	0	0	0		18.3	81.7	0	0		
PHF	.885	.000	.553	.000	.856	.000	.900	.887	.000	.894	.000	.000	.000	.000	.000	.887	.911	.000	.000	.940	.949

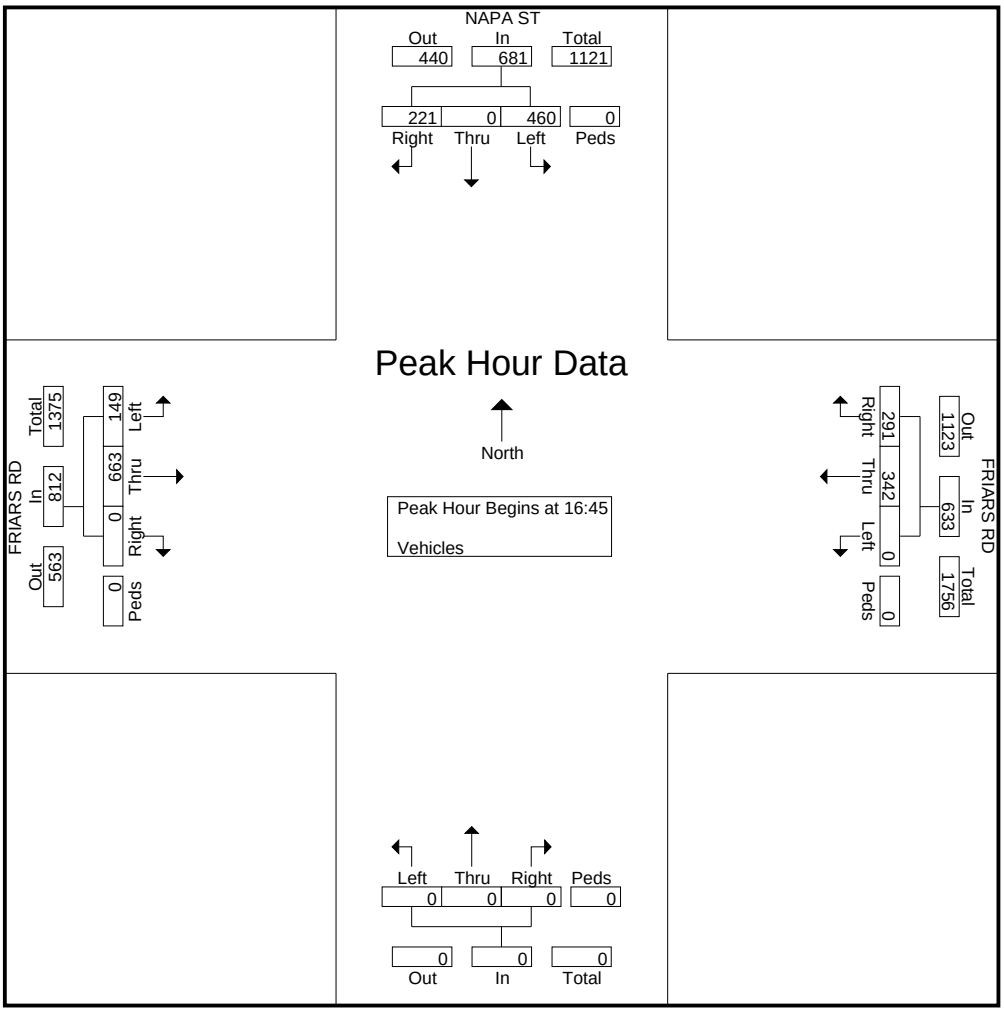

True Count

6520 Lemarand Ave
San Diego, CA 92115

File Name : 24.COLUSA ST.FRIARS RD
Site Code : 00000000
Start Date : 2/5/2013
Page No : 1

Groups Printed- Vehicles

	COLUSA ST Southbound				FRIARS RD Westbound				COLUSA ST Northbound				FRIARS RD Eastbound				
Start Time	Left	Thru	Right	Peds	Left	Thru	Right	Peds	Left	Thru	Right	Peds	Left	Thru	Right	Peds	Int. Total
07:00	5	0	8	0	1	89	5	0	10	1	9	0	1	54	2	0	185
07:15	16	0	10	0	3	110	7	0	10	0	10	0	3	70	3	0	242
07:30	18	1	11	0	1	169	10	0	10	0	11	0	6	109	1	0	347
07:45	20	0	7	0	1	198	11	0	12	1	19	0	11	131	0	0	411
Total	59	1	36	0	6	566	33	0	42	2	49	0	21	364	6	0	1185
08:00	7	2	7	0	5	159	14	0	10	0	6	0	15	91	1	0	317
08:15	15	1	9	0	1	168	17	0	8	2	12	0	13	74	3	0	323
08:30	21	0	15	0	4	124	19	0	17	2	9	0	7	88	2	0	308
08:45	12	1	11	0	1	123	14	0	6	2	15	0	21	120	3	0	329
Total	55	4	42	0	11	574	64	0	41	6	42	0	56	373	9	0	1277
*** BREAK ***																	
16:00	26	4	12	0	9	116	11	0	5	0	6	0	6	161	4	0	360
16:15	21	0	8	0	4	119	9	0	2	1	7	0	10	194	5	0	380
16:30	21	4	5	0	2	138	9	0	3	0	8	0	5	161	7	0	363
16:45	22	1	15	0	11	114	9	0	1	0	3	0	14	245	11	0	446
Total	90	9	40	0	26	487	38	0	11	1	24	0	35	761	27	0	1549
17:00	24	1	10	0	12	139	13	0	11	2	7	0	14	205	8	0	446
17:15	28	3	10	0	6	133	18	0	6	1	8	0	16	254	7	0	490
17:30	28	2	15	0	9	137	9	0	6	1	6	0	12	227	9	0	461
17:45	12	2	7	0	13	132	13	0	1	0	8	0	17	215	14	0	434
Total	92	8	42	0	40	541	53	0	24	4	29	0	59	901	38	0	1831
Grand Total	296	22	160	0	83	2168	188	0	118	13	144	0	171	2399	80	0	5842
Apprch %	61.9	4.6	33.5	0	3.4	88.9	7.7	0	42.9	4.7	52.4	0	6.5	90.5	3	0	
Total %	5.1	0.4	2.7	0	1.4	37.1	3.2	0	2	0.2	2.5	0	2.9	41.1	1.4	0	

True Count

6520 Lemarand Ave
San Diego, CA 92115

File Name : 24.COLUSA ST.FRIARS RD
Site Code : 00000000
Start Date : 2/5/2013
Page No : 2

	COLUSA ST Southbound					FRIARS RD Westbound					COLUSA ST Northbound					FRIARS RD Eastbound					
Start Time	**Left**	**Thru**	**Right**	**Peds**	**App. Total**	**Left**	**Thru**	**Right**	**Peds**	**App. Total**	**Left**	**Thru**	**Right**	**Peds**	**App. Total**	**Left**	**Thru**	**Right**	**Peds**	**App. Total**	**Int. Total**
Peak Hour Analysis From 07:00 to 11:45 - Peak 1 of 1																					
Peak Hour for Entire Intersection Begins at 07:30																					
07:30	18	1	11	0	30	1	169	10	0	180	10	0	11	0	21	6	109	1	0	116	347
07:45	20	0	7	0	27	1	198	11	0	210	12	1	19	0	32	11	131	0	0	142	411
08:00	7	2	7	0	16	5	159	14	0	178	10	0	6	0	16	15	91	1	0	107	317
08:15	15	1	9	0	25	1	168	17	0	186	8	2	12	0	22	13	74	3	0	90	323
Total Volume	60	4	34	0	98	8	694	52	0	754	40	3	48	0	91	45	405	5	0	455	1398
% App. Total	61.2	4.1	34.7	0		1.1	92	6.9	0		44	3.3	52.7	0		9.9	89	1.1	0		
PHF	.750	.500	.773	.000	.817	.400	.876	.765	.000	.898	.833	.375	.632	.000	.711	.750	.773	.417	.000	.801	.850

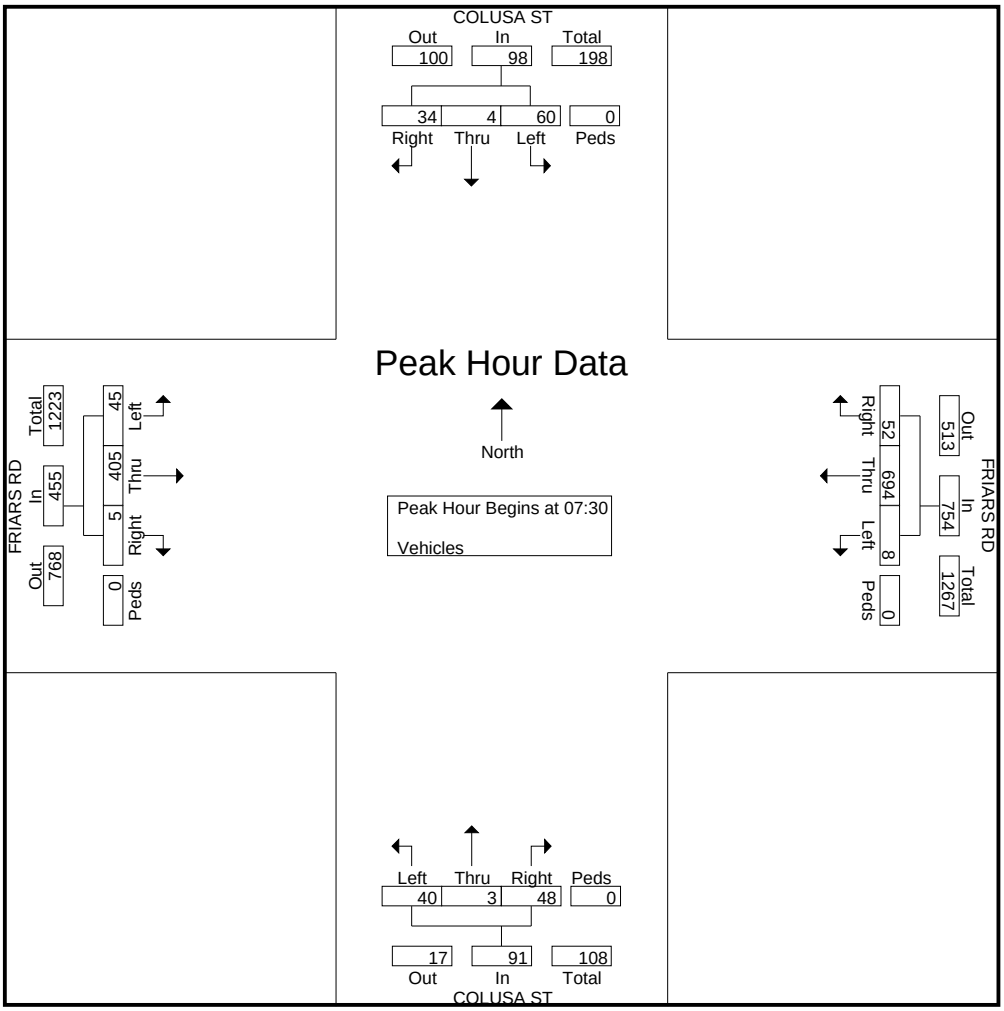

True Count

6520 Lemarand Ave
San Diego, CA 92115

File Name : 24.COLUSA ST.FRIARS RD
Site Code : 00000000
Start Date : 2/5/2013
Page No : 3

	COLUSA ST Southbound					FRIARS RD Westbound					COLUSA ST Northbound					FRIARS RD Eastbound					
Start Time	**Left**	**Thru**	**Right**	**Peds**	**App. Total**	**Left**	**Thru**	**Right**	**Peds**	**App. Total**	**Left**	**Thru**	**Right**	**Peds**	**App. Total**	**Left**	**Thru**	**Right**	**Peds**	**App. Total**	**Int. Total**
Peak Hour Analysis From 12:00 to 17:45 - Peak 1 of 1																					
Peak Hour for Entire Intersection Begins at 16:45																					
16:45	22	1	15	0	38	11	114	9	0	134	1	0	3	0	4	14	245	11	0	270	446
17:00	24	1	10	0	35	12	139	13	0	164	11	2	7	0	20	14	205	8	0	227	446
17:15	28	3	10	0	41	6	133	18	0	157	6	1	8	0	15	16	254	7	0	277	490
17:30	28	2	15	0	45	9	137	9	0	155	6	1	6	0	13	12	227	9	0	248	461
Total Volume	102	7	50	0	159	38	523	49	0	610	24	4	24	0	52	56	931	35	0	1022	1843
% App. Total	64.2	4.4	31.4	0		6.2	85.7	8	0		46.2	7.7	46.2	0		5.5	91.1	3.4	0		
PHF	.911	.583	.833	.000	.883	.792	.941	.681	.000	.930	.545	.500	.750	.000	.650	.875	.916	.795	.000	.922	.940

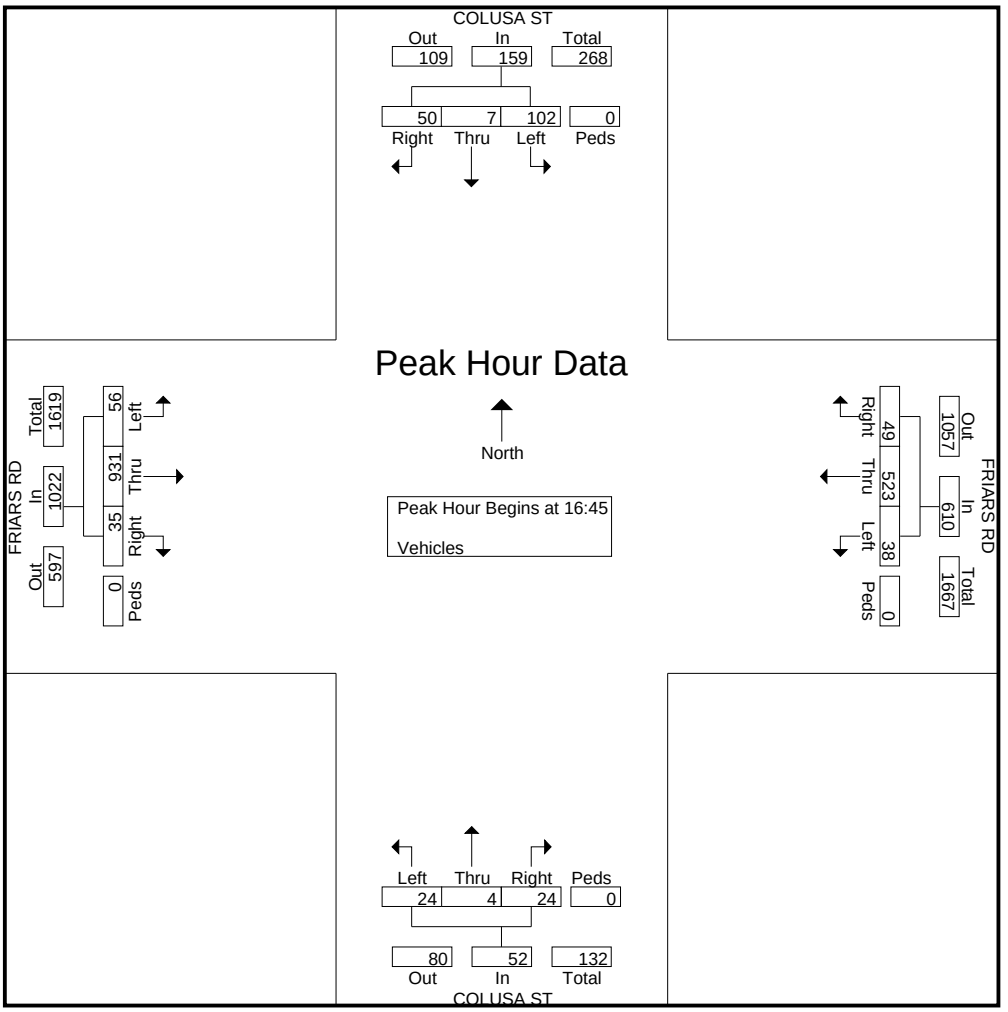

Turn Count Summary

Accurate Video Counts Inc
info@accuratevideocounts.com
(619) 987-5136

Location: Friars Road @ Via Las Cumbres

Date of Count: *Thursday, May 08, 2014*

Analysts: *LV/CD*

Weather: *Sunny*

AVC Proj No: *14-0199*

Vehicular Count

Accurate Video Counts Inc
info@accuratevideocounts.com
(619) 987-5136

Location: Friars Road @ Via Las Cumbres

AM Period (7:00 AM - 9:00 AM)								
	Southbound		Westbound			Eastbound		
	Right	Left	Right	Thru		Thru	Left	TOTAL
7:00 AM	20	24	69	120		86	22	341
7:15 AM	25	38	111	129		69	41	413
7:30 AM	36	33	109	153		106	67	504
7:45 AM	28	46	109	178		105	64	530
8:00 AM	25	43	82	161		83	25	419
8:15 AM	21	50	77	159		92	18	417
8:30 AM	34	49	81	128		84	10	386
8:45 AM	27	43	84	139		121	18	432
Total	216	326	722	1,167		746	265	3,442

AM Intersection Peak Hour : **7:30 AM - 8:30 AM** Intersection PHF : **0.88**

	Southbound		Westbound			Eastbound		TOTAL
	Right	Left	Right	Thru		Thru	Left	
Volume	110	172	377	651		386	174	1,870
PHF	0.76	0.86	0.86	0.91		0.91	0.65	0.88
Movement PHF	0.95			0.90		0.81		0.88

PM Period (4:00 PM - 6:00 PM)								
	Southbound		Westbound			Eastbound		
	Right	Left	Right	Thru		Thru	Left	TOTAL
4:00 PM	17	100	53	129		218	24	541
4:15 PM	26	93	67	157		235	24	602
4:30 PM	12	83	44	135		240	29	543
4:45 PM	29	68	64	182		223	30	596
5:00 PM	22	126	60	170		252	37	667
5:15 PM	23	93	63	136		309	34	658
5:30 PM	28	93	71	168		242	39	641
5:45 PM	26	52	47	158		213	24	520
Total	183	708	469	1,235		1,932	241	4,768

PM Intersection Peak Hour : **4:45 PM - 5:45 PM** Intersection PHF : **0.96**

	Southbound		Westbound			Eastbound		TOTAL
	Right	Left	Right	Thru		Thru	Left	
Volume	102	380	258	656		1026	140	2562
PHF	0.88	0.754	0.908	0.901		0.83	0.897	0.96
Movement PHF	0.81			0.93		0.85		0.96

Turn Count Summary

Accurate Video Counts Inc
info@accuratevideocounts.com
(619) 987-5136

Location: Friars Road @ Fashion Valley Road

Date of Count: *Tuesday, January 27, 2015*

Analysts: *LV/CD*

Weather: *Sunny*

AVC Proj No: *15-0293*

Vehicular Count

Accurate Video Counts Inc
info@accuratevideocounts.com
(619) 987-5136

Location: Friars Road @ Fashion Valley Road

AM Period (7:00 AM - 9:00 AM)													
	Southbound			Westbound			Northbound			Eastbound			
	Right	Thru	Left	Right	Thru	Left	Right	Thru	Left	Right	Thru	Left	TOTAL
7:00 AM	1	0	3	0	174	21	13	0	16	12	109	0	349
7:15 AM	2	0	4	0	199	26	13	0	30	10	144	1	429
7:30 AM	3	0	6	1	255	30	18	1	43	17	149	0	523
7:45 AM	1	0	5	0	248	24	16	0	38	34	141	0	507
8:00 AM	1	0	4	0	269	52	17	1	29	24	160	0	557
8:15 AM	2	1	5	1	251	47	15	0	49	26	134	0	531
8:30 AM	0	1	2	0	240	32	22	0	31	19	122	0	469
8:45 AM	0	2	7	0	231	30	34	0	35	38	137	0	514
Total	10	4	36	2	1,867	262	148	2	271	180	1,096	1	3,879

AM Intersection Peak Hour : **7:30 AM - 8:30 AM** Intersection PHF : **0.95**

	Southbound			Westbound			Northbound			Eastbound			TOTAL
	Right	Thru	Left	Right	Thru	Left	Right	Thru	Left	Right	Thru	Left	
Volume	7	1	20	2	1,023	153	66	2	159	101	584	0	2,118
PHF	0.58	0.25	0.83	0.50	0.95	0.74	0.92	0.50	0.81	0.74	0.91	#####	0.95
Movement PHF		0.78			0.92			0.89			0.93		0.95

PM Period (4:00 PM - 6:00 PM)													
	Southbound			Westbound			Northbound			Eastbound			
	Right	Thru	Left	Right	Thru	Left	Right	Thru	Left	Right	Thru	Left	TOTAL
4:00 PM	1	3	1	4	131	40	58	1	50	49	253	0	591
4:15 PM	0	1	0	0	121	39	85	2	65	43	263	1	620
4:30 PM	0	1	1	4	158	31	59	0	47	75	290	0	666
4:45 PM	0	0	4	2	114	32	74	1	73	55	325	1	681
5:00 PM	0	0	4	1	151	39	78	1	66	66	328	3	737
5:15 PM	0	3	2	3	151	50	69	2	73	64	362	1	780
5:30 PM	1	1	2	1	118	35	63	4	60	63	267	5	620
5:45 PM	0	1	1	4	119	44	70	1	52	58	290	0	640
Total	2	10	15	19	1,063	310	556	12	486	473	2,378	11	5,335

PM Intersection Peak Hour : **4:30 PM - 5:30 PM** Intersection PHF : **0.92**

	Southbound			Westbound			Northbound			Eastbound			TOTAL
	Right	Thru	Left	Right	Thru	Left	Right	Thru	Left	Right	Thru	Left	
Volume	0	4	11	10	574	152	280	4	259	260	1305	5	2864
PHF	#####	0.333	0.688	0.625	0.908	0.76	0.897	0.5	0.887	0.867	0.901	0.417	0.92
Movement PHF		0.75			0.90			0.92			0.92		0.92

Turn Count Summary

Accurate Video Counts Inc
info@accuratevideocounts.com
(619) 987-5136

Location: Friars Road @ Via De La Moda

Date of Count: *Thursday, May 08, 2014*

Analysts: *LV/CD*

Weather: *Sunny*

AVC Proj No: *14-0199*

Vehicular Count

Accurate Video Counts Inc
info@accuratevideocounts.com
(619) 987-5136

Location: Friars Road @ Via De La Moda

AM Period (7:00 AM - 9:00 AM)								
		Westbound		Northbound		Eastbound		
		Thru	Left	Right	Left	Right	Thru	TOTAL
7:00 AM		169	6	3	0	4	142	324
7:15 AM		218	6	1	0	0	144	369
7:30 AM		265	3	4	0	1	169	442
7:45 AM		313	16	3	1	2	212	547
8:00 AM		238	9	1	0	2	155	405
8:15 AM		233	8	7	3	3	173	427
8:30 AM		222	19	1	3	2	194	441
8:45 AM		222	27	2	0	3	167	421
Total		1,880	94	22	7	17	1,356	3,376

AM Intersection Peak Hour : **7:30 AM - 8:30 AM** Intersection PHF : **0.83**

		Westbound		Northbound		Eastbound		TOTAL
		Thru	Left	Right	Left	Right	Thru	
Volume		1,049	36	15	4	8	709	1,821
PHF		0.84	0.56	0.54	0.33	0.67	0.84	0.83
Movement PHF		0.82		0.48			0.84	0.83

PM Period (4:00 PM - 6:00 PM)								
		Westbound		Northbound		Eastbound		
		Thru	Left	Right	Left	Right	Thru	TOTAL
4:00 PM		154	65	60	17	15	389	700
4:15 PM		192	70	70	16	27	350	725
4:30 PM		188	40	63	18	19	418	746
4:45 PM		223	54	61	15	14	339	706
5:00 PM		251	41	79	16	13	464	864
5:15 PM		189	66	62	13	23	499	852
5:30 PM		239	55	73	15	18	432	832
5:45 PM		197	49	77	22	14	345	704
Total		1,633	440	545	132	143	3,236	6,129

PM Intersection Peak Hour : **4:45 PM - 5:45 PM** Intersection PHF : **0.94**

		Westbound		Northbound		Eastbound		TOTAL
		Thru	Left	Right	Left	Right	Thru	
Volume		902	216	275	59	68	1734	3254
PHF		0.898	0.818	0.87	0.922	0.739	0.869	0.94
Movement PHF		0.95		0.88			0.86	0.94

Turn Count Summary

Accurate Video Counts Inc
info@accuratevideocounts.com
(619) 987-5136

Location: Friars Road @ Avenida De Las Tiendas

Date of Count: *Thursday, May 08, 2014*

Analysts: *LV/CD*

Weather: *Sunny*

AVC Proj No: *14-0199*

Vehicular Count

Accurate Video Counts Inc
info@accuratevideocounts.com
(619) 987-5136

Location: Friars Road @ Avenida De Las Tiendas

AM Period (7:00 AM - 9:00 AM)													
	Southbound			Westbound			Northbound			Eastbound			
	Right	Thru	Left	Right	Thru	Left	Right	Thru	Left	Right	Thru	Left	TOTAL
7:00 AM	1	0	7	0	171	14	3	0	0	1	143	0	340
7:15 AM	2	0	5	1	240	21	1	0	0	0	133	0	403
7:30 AM	1	0	8	0	243	18	1	0	0	1	157	2	431
7:45 AM	0	0	9	0	244	33	5	0	2	2	183	0	478
8:00 AM	0	0	6	0	254	29	2	0	2	2	148	0	443
8:15 AM	0	0	5	0	250	37	5	0	0	2	164	2	465
8:30 AM	1	0	6	1	239	53	6	0	0	1	169	0	476
8:45 AM	0	0	11	1	241	78	6	0	1	3	183	0	524
Total	5	0	57	3	1,882	283	29	0	5	12	1,280	4	3,560

AM Intersection Peak Hour : **8:00 AM - 9:00 AM** Intersection PHF : **0.91**

	Southbound			Westbound			Northbound			Eastbound			TOTAL
	Right	Thru	Left	Right	Thru	Left	Right	Thru	Left	Right	Thru	Left	
Volume	1	0	28	2	984	197	19	0	3	8	664	2	1,908
PHF	0.25	#####	0.64	0.50	0.97	0.63	0.79	#####	0.38	0.67	0.91	0.25	0.91
Movement PHF		0.66			0.92			0.79			0.91		0.91

PM Period (4:00 PM - 6:00 PM)													
	Southbound			Westbound			Northbound			Eastbound			
	Right	Thru	Left	Right	Thru	Left	Right	Thru	Left	Right	Thru	Left	TOTAL
4:00 PM	0	0	3	3	224	131	34	1	13	21	380	8	818
4:15 PM	2	0	7	8	275	121	17	1	6	20	399	5	861
4:30 PM	2	0	5	3	219	130	46	0	12	27	396	3	843
4:45 PM	1	1	2	5	293	136	28	1	15	23	389	4	898
5:00 PM	0	0	2	6	267	132	26	0	8	13	447	2	903
5:15 PM	0	0	7	1	262	160	39	0	8	20	451	1	949
5:30 PM	1	0	7	5	323	178	21	0	12	17	463	3	1,030
5:45 PM	1	0	5	8	243	159	35	1	8	20	353	6	839
Total	7	1	38	39	2,106	1,147	246	4	82	161	3,278	32	7,141

PM Intersection Peak Hour : **4:45 PM - 5:45 PM** Intersection PHF : **0.92**

	Southbound			Westbound			Northbound			Eastbound			TOTAL
	Right	Thru	Left	Right	Thru	Left	Right	Thru	Left	Right	Thru	Left	
Volume	2	1	18	17	1145	606	114	1	43	73	1750	10	3780
PHF	0.50	0.25	0.643	0.708	0.886	0.851	0.731	0.25	0.717	0.793	0.945	0.625	0.92
Movement PHF		0.66			0.87			0.84			0.95		0.92

Turn Count Summary

Accurate Video Counts Inc
info@accuratevideocounts.com
(619) 987-5136

Location: Friars Road - Ulric Street @ SR 163 SB Ramps

Date of Count: *Tuesday, September 09, 2014*

Analysts: *LV/CD*

Weather: *Sunny*

AVC Proj No: *14-0253*

Vehicular Count

Accurate Video Counts Inc
info@accuratevideocounts.com
(619) 987-5136

Location: Friars Road - Ulric Street @ SR 163 SB Ramps

AM Period (7:00 AM - 9:00 AM)													
	Southbound			Westbound			Northbound			Eastbound			
	Right	Thru	Left	Right	Thru	Left	Right	Thru	Left	Right	Thru	Left	TOTAL
7:00 AM	14	0	47	64	153	0	143	2	65	60	89	6	643
7:15 AM	23	0	55	137	202	0	133	13	63	75	111	8	820
7:30 AM	16	1	69	123	205	0	202	12	62	80	112	11	893
7:45 AM	23	4	104	88	217	0	216	14	89	77	127	7	966
8:00 AM	24	0	70	101	205	0	172	9	65	54	108	10	818
8:15 AM	20	1	62	100	203	0	172	7	67	68	108	10	818
8:30 AM	27	0	61	75	184	0	169	11	72	101	81	8	789
8:45 AM	24	0	51	65	221	0	186	3	101	68	91	18	828
Total	171	6	519	753	1,590	0	1,393	71	584	583	827	78	6,575

AM Intersection Peak Hour : **7:15 AM - 8:15 AM** Intersection PHF : **0.91**

	Southbound			Westbound			Northbound			Eastbound			TOTAL
	Right	Thru	Left	Right	Thru	Left	Right	Thru	Left	Right	Thru	Left	
Volume	86	5	298	449	829	0	723	48	279	286	458	36	3,497
PHF	0.90	0.31	0.72	0.82	0.96	#####	0.84	0.86	0.78	0.89	0.90	0.82	0.91
Movement PHF		0.74			0.94			0.82			0.92		0.91

PM Period (4:00 PM - 6:00 PM)													
	Southbound			Westbound			Northbound			Eastbound			
	Right	Thru	Left	Right	Thru	Left	Right	Thru	Left	Right	Thru	Left	TOTAL
4:00 PM	24	1	75	145	224	0	207	11	73	155	294	21	1,230
4:15 PM	23	0	81	141	266	0	211	10	69	173	307	24	1,305
4:30 PM	22	2	81	143	244	0	207	18	73	164	326	32	1,312
4:45 PM	25	1	63	134	276	0	204	17	91	123	324	27	1,285
5:00 PM	25	1	84	124	261	0	201	15	88	176	397	26	1,398
5:15 PM	31	0	80	155	315	0	210	12	57	165	362	18	1,405
5:30 PM	22	0	67	140	267	0	206	12	72	140	362	27	1,315
5:45 PM	18	1	71	122	265	0	198	10	72	128	296	17	1,198
Total	190	6	602	1,104	2,118	0	1,644	105	595	1,224	2,668	192	10,448

PM Intersection Peak Hour : **4:45 PM - 5:45 PM** Intersection PHF : **0.96**

	Southbound			Westbound			Northbound			Eastbound			TOTAL
	Right	Thru	Left	Right	Thru	Left	Right	Thru	Left	Right	Thru	Left	
Volume	103	2	294	553	1119	0	821	56	308	604	1445	98	5403
PHF	0.83	0.5	0.875	0.892	0.888	#####	0.977	0.824	0.846	0.858	0.91	0.907	0.96
Movement PHF		0.90			0.89			0.95			0.90		0.96

Turn Count Summary

Accurate Video Counts Inc
info@accuratevideocounts.com
(619) 987-5136

Location: Friars Road @ SR 163 NB Ramps

Date of Count: *Tuesday, September 09, 2014*

Analysts: *LV/CD*

Weather: *Sunny*

AVC Proj No: *14-0253*

Vehicular Count

Accurate Video Counts Inc
info@accuratevideocounts.com
(619) 987-5136

Location: Friars Road @ SR 163 NB Ramps

AM Period (7:00 AM - 9:00 AM)													
	Southbound			Westbound			Northbound			Eastbound			
	Right	Thru	Left	Right	Thru	Left	Right	Thru	Left	Right	Thru	Left	TOTAL
7:00 AM	164	0	0	116	174	0	149	0	0	0	190	89	882
7:15 AM	269	0	0	167	219	0	211	0	0	0	212	87	1,165
7:30 AM	263	0	0	213	287	0	186	0	0	0	260	123	1,332
7:45 AM	229	0	0	200	274	0	245	0	0	0	289	158	1,395
8:00 AM	182	1	0	195	330	0	204	0	0	0	236	114	1,262
8:15 AM	203	0	0	219	283	0	231	0	0	0	225	117	1,278
8:30 AM	148	0	0	194	219	0	236	0	0	0	192	119	1,108
8:45 AM	215	0	0	182	277	0	262	0	0	0	242	86	1,264
Total	1,673	1	0	1,486	2,063	0	1,724	0	0	0	1,846	893	9,686

AM Intersection Peak Hour : **7:30 AM - 8:30 AM** Intersection PHF : **0.94**

	Southbound			Westbound			Northbound			Eastbound			TOTAL
	Right	Thru	Left	Right	Thru	Left	Right	Thru	Left	Right	Thru	Left	
Volume	877	1	0	827	1,174	0	866	0	0	0	1,010	512	5,267
PHF	0.83	0.25	#####	0.94	0.89	#####	0.88	#####	#####	#####	0.87	0.81	0.94
Movement PHF		0.83			0.95			0.88			0.85		0.94

PM Period (4:00 PM - 6:00 PM)													
	Southbound			Westbound			Northbound			Eastbound			
	Right	Thru	Left	Right	Thru	Left	Right	Thru	Left	Right	Thru	Left	TOTAL
4:00 PM	209	0	0	198	405	0	156	0	0	0	464	112	1,544
4:15 PM	224	0	0	173	386	0	221	0	0	0	468	131	1,603
4:30 PM	243	0	0	183	410	0	248	0	0	0	493	121	1,698
4:45 PM	227	0	0	194	416	0	248	0	0	0	433	158	1,676
5:00 PM	175	0	0	212	452	0	270	0	0	0	506	176	1,791
5:15 PM	302	0	0	214	436	0	287	0	0	0	477	175	1,891
5:30 PM	269	0	0	194	375	0	236	0	0	0	516	119	1,709
5:45 PM	229	0	0	125	343	0	285	0	0	0	427	138	1,547
Total	1878	0	0	1,493	3,223	0	1,951	0	0	0	3,784	1,130	13,459

PM Intersection Peak Hour : **4:45 PM - 5:45 PM** Intersection PHF : **0.93**

	Southbound			Westbound			Northbound			Eastbound			TOTAL
	Right	Thru	Left	Right	Thru	Left	Right	Thru	Left	Right	Thru	Left	
Volume	973	0	0	814	1679	0	1041	0	0	0	1932	628	7067
PHF	0.81	#####	#####	0.951	0.929	#####	0.907	#####	#####	#####	0.936	0.892	0.93
Movement PHF		0.81			0.94			0.91			0.94		0.93

24 Hour Segment Count

Accurate Video Counts Inc
info@accuratevideocounts.com
(619) 987-5136

Location: Sea World Dr, Friars Rd to Pacific Highway

Orientation: *North-South*

Date of Count: *Thursday, May 08, 2014*

Analysts: *DASH*

Weather: *Sunny*

AVC Proj. No: *14-0199*

24 Hour Segment Volume ***30,049***

Time	Hourly Volume NB	Hourly Volume SB	Hourly Volume Total	Time	Hourly Volume NB	Hourly Volume SB	Hourly Volume Total
12:00 AM - 1:00 AM	44	88	132	12:00 PM - 1:00 PM	806	921	1,727
1:00 AM - 2:00 AM	29	39	68	1:00 PM - 2:00 PM	925	836	1,761
2:00 AM - 3:00 AM	23	28	51	2:00 PM - 3:00 PM	969	836	1,805
3:00 AM - 4:00 AM	30	14	44	3:00 PM - 4:00 PM	975	1,130	2,105
4:00 AM - 5:00 AM	57	51	108	4:00 PM - 5:00 PM	1,124	1,439	2,563
5:00 AM - 6:00 AM	211	178	389	5:00 PM - 6:00 PM	1,311	1,563	2,874
6:00 AM - 7:00 AM	675	435	1,110	6:00 PM - 7:00 PM	725	1,309	2,034
7:00 AM - 8:00 AM	1,309	733	2,042	7:00 PM - 8:00 PM	536	838	1,374
8:00 AM - 9:00 AM	1,312	747	2,059	8:00 PM - 9:00 PM	497	568	1,065
9:00 AM - 10:00 AM	900	824	1,724	9:00 PM - 10:00 PM	329	403	732
10:00 AM - 11:00 AM	813	961	1,774	10:00 PM - 11:00 PM	206	303	509
11:00 AM - 12:00 PM	749	991	1740	11:00 PM - 12:00 AM	106	153	259
Total	**6,152**	**5,089**	**11,241**	**Total**	**8,509**	**10,299**	**18,808**

24-Hour NB Volume 14,661 ***24-Hour SB Volume 15,388***

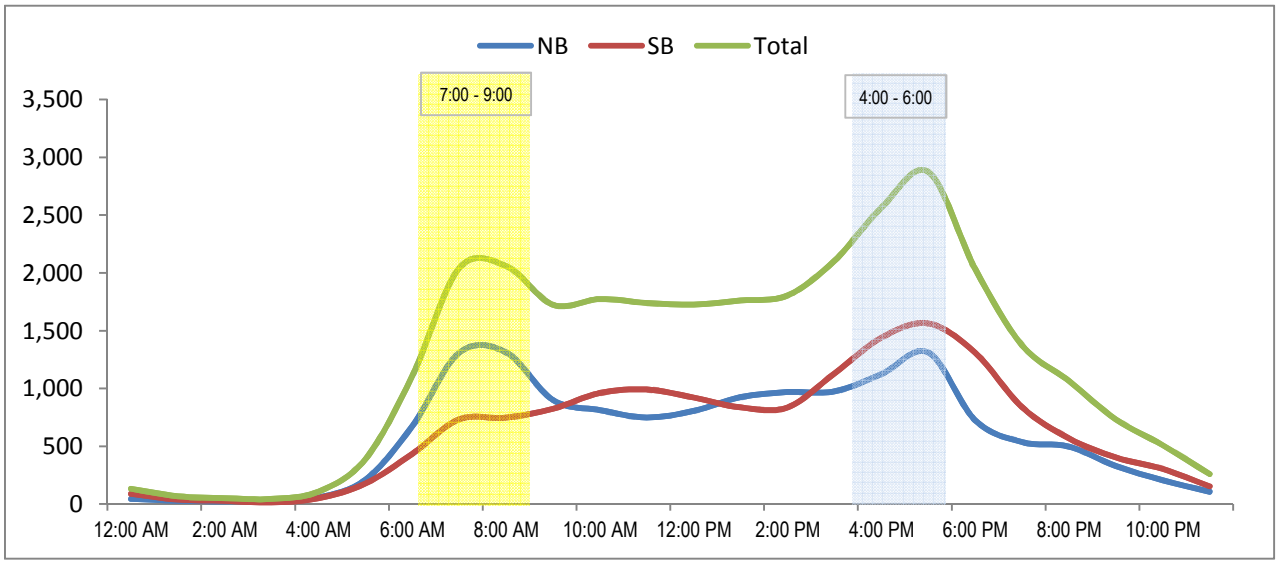

24 Hour Segment Count

Accurate Video Counts Inc
info@accuratevideocounts.com
(619) 987-5136

Location: Sea World Drive btw Pacific Highway to I-5 Ramps

Orientation: *North-South*

Date of Count: *Thursday, May 08, 2014*

Analysts: *DASH*

Weather: *Sunny*

AVC Proj. No: *14-0199*

24 Hour Segment Volume 31,969

Time	Hourly Volume NB	Hourly Volume SB	Hourly Volume Total
12:00 AM - 1:00 AM	61	95	156
1:00 AM - 2:00 AM	46	45	91
2:00 AM - 3:00 AM	35	38	73
3:00 AM - 4:00 AM	40	18	58
4:00 AM - 5:00 AM	68	81	149
5:00 AM - 6:00 AM	205	228	433
6:00 AM - 7:00 AM	662	573	1,235
7:00 AM - 8:00 AM	1,078	827	1,905
8:00 AM - 9:00 AM	1,108	802	1,910
9:00 AM - 10:00 AM	939	951	1,890
10:00 AM - 11:00 AM	898	1,021	1,919
11:00 AM - 12:00 PM	862	1,068	1930
Total	**6,002**	**5,747**	**11,749**

Time	Hourly Volume NB	Hourly Volume SB	Hourly Volume Total
12:00 PM - 1:00 PM	931	997	1,928
1:00 PM - 2:00 PM	1,020	904	1,924
2:00 PM - 3:00 PM	1,083	875	1,958
3:00 PM - 4:00 PM	1,117	1,207	2,324
4:00 PM - 5:00 PM	1,171	1,373	2,544
5:00 PM - 6:00 PM	1,221	1,511	2,732
6:00 PM - 7:00 PM	856	1,382	2,238
7:00 PM - 8:00 PM	741	863	1,604
8:00 PM - 9:00 PM	632	577	1,209
9:00 PM - 10:00 PM	427	431	858
10:00 PM - 11:00 PM	278	307	585
11:00 PM - 12:00 AM	156	160	316
Total	**9,633**	**10,587**	**20,220**

24-Hour NB Volume 15,635 **24-Hour SB Volume 16,334**

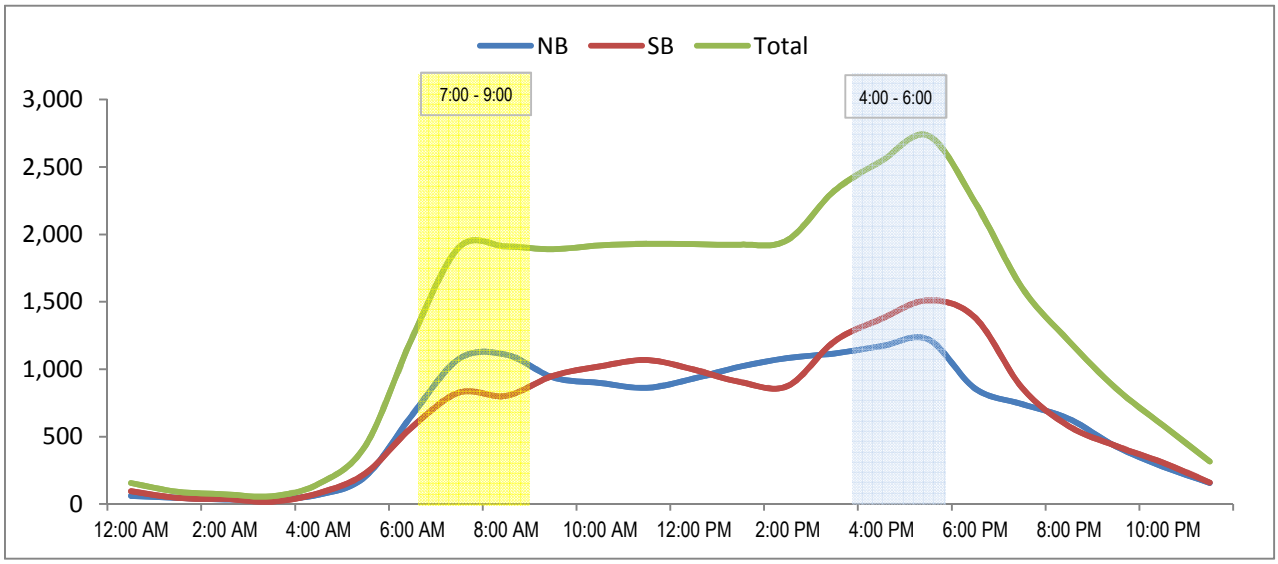

MetroCount Traffic Executive
Event Counts

2087 -- English (ENU)

Datasets:

Site:	**25.TECOLOTE RD (MORENA BLVD - I-5 NB RAMPS) EASTBOUND**
Input A:	2 - East bound. - Lane= 0, Added to totals. (/2.000)
Input B:	4 - West bound. - Lane= 0, Excluded from totals.
Survey Duration:	19:57 Monday, April 08, 2013 => 11:15 Monday, April 15, 2013
File:	092515Apr2013.EC0 (Plus)
Data type:	Axle sensors - Separate (Count)

Profile:

Filter time: **0:00 Tuesday, April 09, 2013 => 0:00 Sunday, April 14, 2013**

* Tuesday, April 09, 2013=11759, 15 minute drops

0000	0100	0200	0300	0400	0500	0600	0700	0800	0900	1000	1100	1200	1300	1400	1500	1600	1700	1800	1900	2000	2100	2200	2300	
42	**32**	**29**	**19**	**32**	**82**	**246**	**678**	**813**	**664**	**697**	**721**	**790**	**789**	**879**	**976**	**986**	**1015**	**694**	**589**	**372**	**300**	**216**	**104**	
14	3	10	3	1	13	36	85	**200**	179	148	196	224	184	185	201	221	**272**	187	140	119	81	79	33	18
6	9	8	4	4	21	45	130	**184**	151	180	151	175	190	236	260	**251**	248	192	171	98	88	61	29	10
13	10	7	7	8	15	93	**218**	198	170	176	173	206	200	258	250	**245**	241	152	142	73	70	34	20	12
9	10	5	5	19	34	73	**246**	232	165	193	201	186	216	201	265	**269**	255	164	137	84	62	43	22	17

AM Peak 0730 - 0830 (847), AM PHF=0.86 PM Peak 1615 - 1715 (1037), PM PHF=0.95

* Wednesday, April 10, 2013=12103, 15 minute drops

0000	0100	0200	0300	0400	0500	0600	0700	0800	0900	1000	1100	1200	1300	1400	1500	1600	1700	1800	1900	2000	2100	2200	2300	
57	**39**	**30**	**13**	**22**	**81**	**253**	**634**	**827**	**716**	**712**	**808**	**838**	**814**	**914**	**897**	**1068**	**1086**	**747**	**563**	**400**	**296**	**181**	**113**	
18	9	8	6	4	13	39	85	162	**205**	166	192	183	227	215	189	223	**270**	187	140	101	80	48	41	22
10	7	13	0	2	12	54	122	**183**	167	191	209	216	160	215	235	281	**295**	211	151	110	73	52	29	19
12	14	7	3	7	25	69	178	**232**	155	159	177	204	217	245	220	**282**	281	192	132	95	77	42	24	16
17	9	3	4	9	32	91	249	**251**	190	196	231	236	210	239	254	**284**	240	158	140	95	67	40	20	11

AM Peak 0815 - 0915 (870), AM PHF=0.87 PM Peak 1630 - 1730 (1130), PM PHF=0.96

* Thursday, April 11, 2013=12233, 15 minute drops

0000	0100	0200	0300	0400	0500	0600	0700	0800	0900	1000	1100	1200	1300	1400	1500	1600	1700	1800	1900	2000	2100	2200	2300	
68	**32**	**27**	**17**	**31**	**92**	**222**	**709**	**809**	**694**	**748**	**748**	**800**	**814**	**926**	**963**	**1034**	**1050**	**763**	**652**	**376**	**317**	**231**	**117**	
22	8	6	3	3	9	42	87	**183**	182	154	162	209	186	214	203	238	**276**	212	145	100	74	71	32	16
19	10	9	4	10	18	47	125	**186**	160	205	196	216	193	221	233	263	**309**	202	176	94	92	63	39	24
16	12	6	3	5	26	61	**229**	187	167	218	173	175	219	249	283	**264**	250	190	160	101	79	40	27	22
11	3	6	7	13	39	73	**269**	254	186	173	218	201	216	243	245	**269**	215	159	171	81	73	58	19	20

AM Peak 0730 - 0830 (866), AM PHF=0.80 PM Peak 1630 - 1730 (1117), PM PHF=0.91

* Friday, April 12, 2013=12458, 15 minute drops

0000	0100	0200	0300	0400	0500	0600	0700	0800	0900	1000	1100	1200	1300	1400	1500	1600	1700	1800	1900	2000	2100	2200	2300	
82	**48**	**44**	**33**	**27**	**89**	**229**	**694**	**750**	**723**	**699**	**809**	**844**	**834**	**965**	**1004**	**1041**	**985**	**732**	**594**	**433**	**338**	**272**	**194**	
16	12	9	12	3	12	40	99	168	166	180	197	**217**	231	210	265	259	**258**	208	166	122	106	58	57	34
24	10	20	8	8	20	54	131	163	196	155	206	**207**	195	231	245	253	**271**	215	148	106	84	67	42	41
22	14	8	9	7	26	61	203	189	171	159	194	**211**	196	257	246	**258**	224	155	140	107	75	77	48	23
20	13	7	4	9	32	75	261	230	191	206	**213**	210	213	268	249	**272**	234	155	140	99	73	70	48	18

AM Peak 1145 - 1245 (847), AM PHF=0.98 PM Peak 1630 - 1730 (1058), PM PHF=0.97

* Saturday, April 13, 2013=10272, 15 minute drops

0000	0100	0200	0300	0400	0500	0600	0700	0800	0900	1000	1100	1200	1300	1400	1500	1600	1700	1800	1900	2000	2100	2200	2300	
115	**82**	**57**	**46**	**29**	**33**	**115**	**290**	**543**	**725**	**718**	**775**	**835**	**848**	**763**	**720**	**769**	**711**	**539**	**432**	**389**	**325**	**252**	**168**	
34	22	21	10	8	3	18	56	97	191	171	186	**225**	228	192	193	178	172	113	118	93	79	89	42	-
41	18	17	10	6	8	24	53	115	175	191	166	**223**	203	174	170	211	197	156	97	114	86	61	52	-
23	20	8	20	8	9	28	75	143	179	160	**212**	186	215	187	184	200	186	125	104	103	79	46	42	-
18	22	11	7	7	14	45	106	189	180	197	**213**	201	202	211	174	180	157	145	114	79	82	56	32	-

AM Peak 1130 - 1230 (872), AM PHF=0.97

MetroCount Traffic Executive
Event Counts

2088 -- English (ENU)

Datasets:

Site:	**25.TECOLOTE RD (MORENA BLVD - I-5 NB RAMPS) WESTBOUND**
Input A:	2 - East bound. - Lane= 0, Excluded from totals.
Input B:	4 - West bound. - Lane= 0, Added to totals. (/2.000)
Survey Duration:	19:57 Monday, April 08, 2013 => 11:15 Monday, April 15, 2013
File:	092515Apr2013.EC0 (Plus)
Data type:	Axle sensors - Separate (Count)

Profile:

Filter time:	**0:00 Tuesday, April 09, 2013 => 0:00 Sunday, April 14, 2013**

* Tuesday, April 09, 2013=11573, 15 minute drops

0000	0100	0200	0300	0400	0500	0600	0700	0800	0900	1000	1100	1200	1300	1400	1500	1600	1700	1800	1900	2000	2100	2200	2300	
34	**20**	**25**	**19**	**32**	**156**	**379**	**915**	**936**	**697**	**668**	**689**	**744**	**728**	**770**	**812**	**790**	**786**	**735**	**557**	**413**	**404**	**173**	**96**	
9	7	7	2	6	28	70	180	**312**	175	151	163	171	192	169	**208**	213	201	177	149	110	96	56	33	18
11	5	8	7	7	39	73	196	**209**	186	144	171	186	187	165	**208**	184	208	166	153	114	94	51	25	20
7	3	4	8	10	50	121	**255**	220	182	200	180	198	184	**179**	171	191	209	183	134	94	128	42	19	17
7	5	6	2	9	40	116	**285**	195	155	173	175	191	166	**257**	226	202	169	210	121	96	86	25	19	10

AM Peak 0730 - 0830 (1061), AM PHF=0.85 PM Peak 1430 - 1530 (851), PM PHF=0.83

* Wednesday, April 10, 2013=11728, 15 minute drops

0000	0100	0200	0300	0400	0500	0600	0700	0800	0900	1000	1100	1200	1300	1400	1500	1600	1700	1800	1900	2000	2100	2200	2300	
65	**40**	**24**	**22**	**38**	**144**	**361**	**903**	**919**	**736**	**663**	**734**	**739**	**771**	**747**	**833**	**830**	**827**	**658**	**670**	**447**	**310**	**160**	**93**	
18	12	5	4	6	16	57	190	**288**	228	174	188	165	207	151	223	**230**	221	176	195	111	105	54	34	10
20	9	6	9	6	37	83	208	**217**	169	146	178	200	202	204	201	**210**	228	163	181	110	75	47	25	10
17	11	9	6	15	42	97	**254**	209	175	190	186	196	173	185	204	**219**	196	168	173	101	60	36	22	11
10	8	4	4	11	49	125	**251**	205	165	154	183	179	189	207	**207**	172	183	151	122	126	70	24	12	14

AM Peak 0730 - 0830 (1009), AM PHF=0.88 PM Peak 1545 - 1645 (865), PM PHF=0.94

* Thursday, April 11, 2013=11775, 15 minute drops

0000	0100	0200	0300	0400	0500	0600	0700	0800	0900	1000	1100	1200	1300	1400	1500	1600	1700	1800	1900	2000	2100	2200	2300	
45	**25**	**16**	**21**	**41**	**141**	**385**	**908**	**915**	**706**	**674**	**754**	**778**	**755**	**808**	**834**	**892**	**877**	**687**	**559**	**402**	**279**	**162**	**114**	
10	7	3	7	5	17	76	179	**299**	194	169	178	208	190	190	229	**244**	248	170	142	121	87	47	36	19
10	4	5	3	11	26	84	**212**	210	168	172	170	209	196	190	177	**228**	195	168	161	99	68	55	33	21
11	8	8	4	9	42	110	**246**	211	186	149	202	197	199	184	232	**233**	235	192	132	89	71	30	26	19
14	6	0	7	16	57	116	**273**	197	158	185	204	165	171	244	**196**	188	200	157	125	94	53	30	19	14

AM Peak 0715 - 0815 (1028), AM PHF=0.86 PM Peak 1545 - 1645 (901), PM PHF=0.92

* Friday, April 12, 2013=12055, 15 minute drops

0000	0100	0200	0300	0400	0500	0600	0700	0800	0900	1000	1100	1200	1300	1400	1500	1600	1700	1800	1900	2000	2100	2200	2300	
73	**37**	**22**	**28**	**44**	**133**	**357**	**864**	**852**	**745**	**699**	**781**	**825**	**799**	**861**	**883**	**859**	**818**	**705**	**539**	**434**	**310**	**214**	**179**	
19	10	8	7	4	21	60	155	**233**	194	174	178	203	193	180	**234**	225	228	205	154	112	81	77	50	23
21	9	6	4	9	19	83	188	**212**	179	185	171	210	201	**224**	220	205	201	176	148	96	80	46	47	27
19	8	6	6	14	51	103	**262**	199	198	181	229	216	225	**214**	208	224	204	161	127	116	77	43	52	31
14	10	2	11	17	43	111	**260**	209	176	160	203	196	180	**244**	221	205	186	165	111	111	72	49	31	42

AM Peak 0730 - 0830 (965), AM PHF=0.92 PM Peak 1415 - 1515 (915), PM PHF=0.94

* Saturday, April 13, 2013=9788, 15 minute drops

0000	0100	0200	0300	0400	0500	0600	0700	0800	0900	1000	1100	1200	1300	1400	1500	1600	1700	1800	1900	2000	2100	2200	2300	
123	**107**	**47**	**39**	**29**	**60**	**165**	**277**	**483**	**600**	**674**	**822**	**820**	**742**	**709**	**817**	**685**	**598**	**580**	**390**	**323**	**321**	**231**	**153**	
23	26	17	10	6	8	28	52	115	122	164	209	**211**	164	157	203	177	135	196	94	73	103	70	41	-
27	29	11	12	3	9	43	64	106	154	175	205	**215**	195	184	216	172	131	146	104	85	71	41	41	-
31	30	7	9	6	22	42	83	113	158	184	**219**	204	184	170	208	172	166	118	100	84	75	62	39	-
42	22	12	9	14	21	52	80	149	166	152	**191**	191	199	198	190	165	166	120	93	82	72	58	32	-

AM Peak 1130 - 1230 (834), AM PHF=0.95

MetroCount Traffic Executive
Event Counts

2074 -- English (ENU)

Datasets:

Site:	**18.MORENA BLVD (TECOLOTE RD - BUENOS AVE) NORTHBOUND**
Input A:	1 - North bound. - Lane= 0, Added to totals. (/2.000)
Input B:	0 - Unused or unknown. - Lane= 0, Excluded from totals.
Survey Duration:	16:24 Monday, April 08, 2013 => 11:33 Monday, April 15, 2013
File:	0918N15Apr2013.EC0 (Base)
Data type:	Axle sensors - Separate (Count)

Profile:

Filter time: **0:00 Tuesday, April 09, 2013 => 0:00 Sunday, April 14, 2013**

* Tuesday, April 09, 2013=7879, 15 minute drops

0000	0100	0200	0300	0400	0500	0600	0700	0800	0900	1000	1100	1200	1300	1400	1500	1600	1700	1800	1900	2000	2100	2200	2300	
26	**8**	**13**	**8**	**21**	**55**	**192**	**556**	**559**	**447**	**439**	**460**	**542**	**532**	**533**	**589**	**555**	**602**	**456**	**426**	**389**	**300**	**113**	**64**	
8	3	4	1	4	9	25	85	**132**	103	95	98	133	127	121	136	**152**	159	118	128	95	78	44	31	7
9	3	3	3	3	15	34	110	**139**	130	117	108	164	146	122	**169**	125	153	117	105	114	92	28	14	9
3	0	3	2	7	14	73	**165**	158	108	112	114	137	128	141	**137**	146	145	126	101	98	79	27	10	5
6	2	3	2	7	17	60	**197**	130	107	115	140	109	132	151	**148**	133	146	95	93	83	51	15	9	6

AM Peak 0730 - 0830 (633), AM PHF=0.80 PM Peak 1515 - 1615 (605), PM PHF=0.90

* Wednesday, April 10, 2013=7446, 15 minute drops

0000	0100	0200	0300	0400	0500	0600	0700	0800	0900	1000	1100	1200	1300	1400	1500	1600	1700	1800	1900	2000	2100	2200	2300	
27	**19**	**13**	**16**	**20**	**56**	**199**	**551**	**578**	**491**	**422**	**472**	**541**	**16**	**555**	**565**	**485**	**662**	**526**	**446**	**335**	**264**	**126**	**67**	
7	7	6	2	3	9	27	93	**151**	116	110	119	118	0	142	131	168	**167**	121	155	79	76	35	19	6
9	8	2	10	4	12	46	119	**126**	130	107	109	146	0	139	146	89	**172**	138	116	75	63	35	17	9
5	2	4	3	6	16	59	**155**	150	134	112	128	148	0	144	140	98	**174**	153	103	83	51	29	19	3
6	2	1	1	7	19	67	**185**	151	111	94	117	130	16	131	148	131	**149**	115	73	98	74	27	12	3

AM Peak 0730 - 0830 (616), AM PHF=0.83 PM Peak 1700 - 1800 (662), PM PHF=0.95

* Thursday, April 11, 2013=8210, 15 minute drops

0000	0100	0200	0300	0400	0500	0600	0700	0800	0900	1000	1100	1200	1300	1400	1500	1600	1700	1800	1900	2000	2100	2200	2300	
21	**14**	**14**	**12**	**10**	**71**	**196**	**549**	**600**	**460**	**428**	**540**	**600**	**523**	**607**	**576**	**664**	**658**	**501**	**424**	**330**	**216**	**120**	**82**	
6	4	3	4	2	9	30	108	**155**	136	108	127	161	142	161	138	184	**172**	122	133	106	58	37	29	13
9	3	4	2	3	11	45	109	**131**	112	104	114	161	122	147	138	169	**156**	112	109	83	63	38	19	11
3	4	5	3	1	21	63	153	**157**	98	103	145	142	135	154	157	169	**199**	133	78	54	48	21	20	10
3	3	2	3	4	31	58	**181**	157	115	114	154	137	125	145	143	**143**	131	134	105	88	48	24	14	12

AM Peak 0745 - 0845 (624), AM PHF=0.86 PM Peak 1645 - 1745 (669), PM PHF=0.84

* Friday, April 12, 2013=8417, 15 minute drops

0000	0100	0200	0300	0400	0500	0600	0700	0800	0900	1000	1100	1200	1300	1400	1500	1600	1700	1800	1900	2000	2100	2200	2300	
46	**25**	**13**	**19**	**13**	**59**	**194**	**521**	**562**	**436**	**484**	**545**	**636**	**575**	**709**	**619**	**611**	**622**	**519**	**400**	**289**	**228**	**172**	**124**	
13	6	4	4	1	13	27	82	137	127	134	124	**150**	139	**162**	147	150	181	143	120	72	53	56	35	21
11	7	4	2	3	6	48	112	141	121	112	151	**173**	149	**184**	169	142	175	129	114	83	62	42	39	15
10	6	3	9	4	18	55	161	133	96	128	136	**163**	144	**177**	153	163	127	141	79	81	64	37	28	14
12	6	2	4	5	22	64	166	152	92	110	**135**	151	143	**186**	151	158	140	107	88	54	50	38	23	39

AM Peak 1145 - 1245 (620), AM PHF=0.90 PM Peak 1400 - 1500 (709), PM PHF=0.95

* Saturday, April 13, 2013=6579, 15 minute drops

0000	0100	0200	0300	0400	0500	0600	0700	0800	0900	1000	1100	1200	1300	1400	1500	1600	1700	1800	1900	2000	2100	2200	2300	
88	**61**	**41**	**20**	**15**	**22**	**96**	**163**	**279**	**404**	**405**	**527**	**566**	**577**	**538**	**557**	**495**	**325**	**369**	**304**	**228**	**243**	**165**	**97**	
21	15	13	6	4	2	20	31	82	88	96	115	**132**	131	128	148	121	103	117	81	53	83	51	21	-
15	16	5	4	2	3	19	33	54	112	99	135	**136**	151	143	141	117	97	100	77	51	54	43	18	-
14	11	9	6	3	9	32	46	64	103	103	135	**159**	144	124	145	130	88	78	81	57	52	35	34	-
39	19	14	4	6	8	25	53	79	101	108	**143**	139	152	144	124	128	38	75	66	67	54	37	24	-

AM Peak 1145 - 1245 (569), AM PHF=0.90

MetroCount Traffic Executive
Event Counts

2075 -- English (ENU)

Datasets:

Site:	**18.MORENA BLVD (TECOLOTE RD - BUENOS AVE) SOUTHBOUND**
Input A:	3 - South bound. - Lane= 0, Added to totals. (/2.000)
Input B:	0 - Unused or unknown. - Lane= 0, Excluded from totals.
Survey Duration:	16:25 Monday, April 08, 2013 => 11:30 Monday, April 15, 2013
File:	0918S15Apr2013.EC0 (Regular)
Data type:	Axle sensors - Separate (Count)

Profile:

Filter time: **0:00 Tuesday, April 09, 2013 => 0:00 Sunday, April 14, 2013**

* Tuesday, April 09, 2013=7095, 15 minute drops

0000	0100	0200	0300	0400	0500	0600	0700	0800	0900	1000	1100	1200	1300	1400	1500	1600	1700	1800	1900	2000	2100	2200	2300	
25	**19**	**15**	**5**	**17**	**60**	**157**	**352**	**436**	**485**	**461**	**472**	**559**	**537**	**527**	**588**	**609**	**597**	**433**	**271**	**174**	**145**	**97**	**60**	
10	3	8	1	2	15	26	64	98	137	112	127	**167**	152	119	139	153	**162**	121	57	48	44	44	17	11
4	3	1	1	2	14	36	77	96	109	116	118	**125**	112	135	133	134	**161**	99	77	39	34	21	16	8
7	10	4	0	2	12	47	108	113	134	113	89	**140**	135	150	164	137	**138**	96	73	53	35	14	12	13
5	3	2	3	11	20	49	104	130	106	121	**139**	128	139	124	153	**185**	137	118	64	34	32	18	16	15

AM Peak 1145 - 1245 (569), AM PHF=0.85 PM Peak 1645 - 1745 (645), PM PHF=0.87

* Wednesday, April 10, 2013=7385, 15 minute drops

0000	0100	0200	0300	0400	0500	0600	0700	0800	0900	1000	1100	1200	1300	1400	1500	1600	1700	1800	1900	2000	2100	2200	2300	
46	**25**	**22**	**7**	**10**	**52**	**159**	**345**	**472**	**473**	**489**	**505**	**556**	**560**	**546**	**543**	**655**	**639**	**462**	**307**	**260**	**131**	**76**	**51**	
11	5	8	1	0	11	19	53	97	120	106	127	**147**	143	138	121	167	**159**	105	85	72	37	20	16	17
8	3	5	0	3	7	38	87	102	110	129	118	**131**	120	121	134	155	**183**	129	88	77	39	29	15	9
13	13	6	3	4	14	53	103	127	117	122	119	**142**	163	149	142	**171**	156	123	73	54	28	12	12	12
15	4	3	3	3	21	49	103	147	128	133	**142**	137	136	139	147	**163**	142	105	62	58	27	15	8	3

AM Peak 1145 - 1245 (561), AM PHF=0.96 PM Peak 1630 - 1730 (675), PM PHF=0.92

* Thursday, April 11, 2013=7388, 15 minute drops

0000	0100	0200	0300	0400	0500	0600	0700	0800	0900	1000	1100	1200	1300	1400	1500	1600	1700	1800	1900	2000	2100	2200	2300	
41	**25**	**15**	**9**	**19**	**52**	**157**	**331**	**465**	**423**	**499**	**497**	**549**	**535**	**523**	**557**	**644**	**626**	**490**	**398**	**234**	**161**	**95**	**49**	
17	5	5	0	0	9	30	60	97	118	114	117	**147**	116	131	115	153	**186**	128	86	66	41	29	7	9
9	7	6	3	9	13	38	73	101	106	127	124	**143**	135	121	133	**163**	161	133	113	66	46	26	17	8
12	11	3	1	1	17	39	89	119	95	135	**133**	126	155	131	173	**160**	141	130	108	63	39	15	17	17
3	2	1	5	10	13	50	109	148	105	124	**124**	133	130	141	137	**170**	138	100	92	40	35	25	9	8

AM Peak 1130 - 1230 (547), AM PHF=0.93 PM Peak 1615 - 1715 (678), PM PHF=0.91

* Friday, April 12, 2013=7603, 15 minute drops

0000	0100	0200	0300	0400	0500	0600	0700	0800	0900	1000	1100	1200	1300	1400	1500	1600	1700	1800	1900	2000	2100	2200	2300	
42	**33**	**30**	**16**	**20**	**54**	**140**	**354**	**455**	**462**	**480**	**540**	**582**	**471**	**540**	**601**	**696**	**612**	**462**	**346**	**248**	**215**	**125**	**82**	
9	5	6	2	2	8	25	49	119	106	112	141	**158**	84	123	154	**203**	175	119	108	62	66	34	26	24
8	11	15	7	2	11	34	81	94	120	100	142	**143**	131	140	138	**159**	177	148	89	65	58	34	22	19
17	12	6	5	4	19	38	108	97	116	124	115	**145**	139	143	144	**173**	133	101	80	68	42	31	20	14
8	5	4	2	12	17	44	118	146	120	145	**144**	136	118	135	**165**	161	127	95	70	53	49	26	15	17

AM Peak 1145 - 1245 (589), AM PHF=0.93 PM Peak 1545 - 1645 (700), PM PHF=0.86

* Saturday, April 13, 2013=5984, 15 minute drops

0000	0100	0200	0300	0400	0500	0600	0700	0800	0900	1000	1100	1200	1300	1400	1500	1600	1700	1800	1900	2000	2100	2200	2300	
73	**64**	**39**	**25**	**12**	**21**	**72**	**141**	**307**	**370**	**452**	**510**	**493**	**479**	**444**	**439**	**503**	**396**	**333**	**269**	**181**	**156**	**113**	**99**	
24	23	11	4	4	5	15	22	56	91	109	**119**	114	143	115	109	132	95	88	67	36	37	48	27	-
19	13	12	9	1	4	14	20	60	93	103	**146**	128	116	94	107	129	99	105	66	52	38	24	30	-
14	16	8	9	1	6	17	43	83	94	105	**113**	115	117	111	113	135	104	65	67	46	39	18	18	-
17	12	8	4	6	7	26	56	108	92	**136**	134	136	104	124	110	108	99	76	69	47	43	23	24	-

AM Peak 1045 - 1145 (513), AM PHF=0.88

MetroCount Traffic Executive
Event Counts

2076 -- English (ENU)

Datasets:

Site:	**19.MORENA BLVD (BUENOS AVE - MORENA BLVD SOUTH SPLIT) NORTHBOUND**
Input A:	1 - North bound. - Lane= 0, Added to totals. (/2.000)
Input B:	3 - South bound. - Lane= 0, Excluded from totals.
Survey Duration:	16:06 Monday, April 08, 2013 => 12:03 Monday, April 15, 2013
File:	091915Apr2013.INCOMPLETE.EC0 (Regular)
Data type:	Axle sensors - Separate (Count)

Profile:

Filter time:	**0:00 Tuesday, April 09, 2013 => 0:00 Friday, April 12, 2013**

*** Tuesday, April 09, 2013=7991, 15 minute drops**

0000	0100	0200	0300	0400	0500	0600	0700	0800	0900	1000	1100	1200	1300	1400	1500	1600	1700	1800	1900	2000	2100	2200	2300	
28	**9**	**13**	**8**	**21**	**67**	**199**	**554**	**624**	**483**	**411**	**438**	**540**	**515**	**547**	**629**	**549**	**593**	**456**	**447**	**370**	**307**	**124**	**65**	
12	4	5	1	3	8	22	87	**135**	124	93	105	123	121	118	143	**153**	137	121	129	107	74	51	29	6
7	3	4	3	2	16	36	101	**147**	119	107	99	160	151	123	**166**	118	164	113	127	110	91	37	10	9
3	0	1	1	9	18	75	162	**184**	129	101	104	134	131	147	**163**	149	152	126	103	72	86	23	10	6
6	2	3	3	7	25	67	**206**	159	112	110	132	123	113	160	**158**	129	141	96	89	82	57	13	16	8

AM Peak 0745 - 0845 (671), AM PHF=0.82 PM Peak 1515 - 1615 (639), PM PHF=0.96

*** Wednesday, April 10, 2013=8455, 15 minute drops**

0000	0100	0200	0300	0400	0500	0600	0700	0800	0900	1000	1100	1200	1300	1400	1500	1600	1700	1800	1900	2000	2100	2200	2300	
29	**20**	**14**	**9**	**26**	**63**	**204**	**605**	**686**	**559**	**418**	**520**	**578**	**545**	**562**	**579**	**637**	**659**	**522**	**433**	**334**	**264**	**130**	**63**	
6	6	7	1	4	8	30	109	**181**	149	118	125	131	122	151	131	**170**	151	126	164	80	71	36	19	7
9	7	4	6	5	13	47	117	**151**	142	112	127	141	140	136	134	**169**	161	124	107	81	69	32	17	9
6	3	3	1	9	18	53	160	**178**	139	92	141	165	139	156	154	**163**	196	138	87	82	57	35	13	4
8	4	0	1	8	24	74	**220**	177	131	97	128	142	144	120	**160**	136	152	135	76	91	68	28	15	2

AM Peak 0745 - 0845 (730), AM PHF=0.83 PM Peak 1545 - 1645 (662), PM PHF=0.97

*** Thursday, April 11, 2013=8387, 15 minute drops**

0000	0100	0200	0300	0400	0500	0600	0700	0800	0900	1000	1100	1200	1300	1400	1500	1600	1700	1800	1900	2000	2100	2200	2300	
22	**14**	**18**	**10**	**18**	**83**	**205**	**570**	**635**	**492**	**448**	**559**	**623**	**534**	**624**	**589**	**642**	**680**	**475**	**404**	**314**	**225**	**116**	**91**	
7	4	5	3	2	13	29	106	**152**	142	108	125	150	134	170	145	170	168	128	109	110	64	36	27	-
9	4	7	2	5	15	44	103	**142**	114	114	133	169	122	159	145	154	166	104	108	81	68	32	27	-
4	4	5	3	3	23	64	**170**	170	106	106	136	152	157	151	156	164	202	110	86	54	46	22	26	-
2	2	1	2	8	32	68	**192**	172	130	121	165	153	122	145	143	154	146	133	102	70	48	26	12	-

AM Peak 0730 - 0830 (656), AM PHF=0.85

MetroCount Traffic Executive
Event Counts

2077 -- English (ENU)

Datasets:

Site:	**19.MORENA BLVD (BUENOS AVE - MORENA BLVD SOUTH SPLIT) SOUTHBOUND**
Input A:	1 - North bound. - Lane= 0, Excluded from totals.
Input B:	3 - South bound. - Lane= 0, Added to totals. (/2.000)
Survey Duration:	16:06 Monday, April 08, 2013 => 12:03 Monday, April 15, 2013
File:	091915Apr2013.INCOMPLETE.EC0 (Regular)
Data type:	Axle sensors - Separate (Count)

Profile:

Filter time:	**0:00 Tuesday, April 09, 2013 => 0:00 Friday, April 12, 2013**

*** Tuesday, April 09, 2013=7622, 15 minute drops**

0000	0100	0200	0300	0400	0500	0600	0700	0800	0900	1000	1100	1200	1300	1400	1500	1600	1700	1800	1900	2000	2100	2200	2300	
25	**18**	**16**	**9**	**15**	**54**	**166**	**368**	**469**	**441**	**471**	**526**	**577**	**594**	**581**	**543**	**714**	**673**	**481**	**325**	**210**	**175**	**115**	**62**	
5	3	5	4	2	12	24	56	116	111	103	168	**167**	172	128	147	178	**206**	140	94	70	50	46	19	13
5	2	1	2	2	13	41	82	104	99	118	114	**158**	110	181	122	165	**175**	110	84	46	38	25	16	11
7	9	8	0	3	8	48	123	110	125	121	102	**142**	152	151	148	**183**	137	107	74	49	49	24	12	12
8	4	2	3	8	21	54	108	139	106	130	**142**	111	162	122	126	**189**	155	124	74	45	38	21	15	13

AM Peak 1145 - 1245 (608), AM PHF=0.91 PM Peak 1630 - 1730 (752), PM PHF=0.91

*** Wednesday, April 10, 2013=8148, 15 minute drops**

0000	0100	0200	0300	0400	0500	0600	0700	0800	0900	1000	1100	1200	1300	1400	1500	1600	1700	1800	1900	2000	2100	2200	2300	
49	**22**	**19**	**8**	**12**	**59**	**161**	**371**	**497**	**479**	**486**	**621**	**672**	**677**	**560**	**597**	**704**	**723**	**500**	**324**	**303**	**160**	**94**	**56**	
13	5	3	1	2	11	22	68	116	111	102	172	**194**	171	140	140	181	**228**	122	106	82	48	29	18	11
11	1	1	0	2	11	36	90	110	90	115	136	**175**	146	129	139	167	**189**	134	79	88	44	34	14	10
12	11	11	3	4	14	44	105	112	144	124	**138**	134	157	150	163	**178**	153	118	84	64	34	13	13	13
13	5	4	4	4	23	59	108	159	135	146	**176**	170	203	142	156	**178**	154	127	55	69	34	18	11	3

AM Peak 1130 - 1230 (682), AM PHF=0.88 PM Peak 1630 - 1730 (773), PM PHF=0.85

*** Thursday, April 11, 2013=7870, 15 minute drops**

0000	0100	0200	0300	0400	0500	0600	0700	0800	0900	1000	1100	1200	1300	1400	1500	1600	1700	1800	1900	2000	2100	2200	2300	
37	**25**	**16**	**9**	**17**	**50**	**160**	**342**	**500**	**414**	**475**	**530**	**563**	**585**	**543**	**595**	**705**	**748**	**502**	**427**	**262**	**190**	**114**	**65**	
11	7	2	1	3	11	25	64	103	115	115	117	**149**	140	136	124	178	233	145	92	76	50	39	16	-
10	8	5	4	4	11	38	81	120	102	124	**146**	127	144	145	141	184	214	134	115	76	53	35	20	-
13	8	6	2	2	13	35	98	135	90	122	**135**	139	147	121	189	184	157	126	115	55	48	20	16	-
3	2	3	2	8	15	62	100	142	108	114	**132**	149	155	142	142	160	145	98	105	55	40	21	13	-

AM Peak 1115 - 1215 (562), AM PHF=0.94

MetroCount Traffic Executive
Event Counts

2066 -- English (ENU)

Datasets:

Site: **13.MORENA BLVD (WEST MORENA BLVD - NAPA ST) NORTHBOUND**
Input A: 1 - North bound. - Lane= 0, Added to totals. (/2.000)
Input B: 3 - South bound. - Lane= 0, Excluded from totals.
Survey Duration: 15:48 Monday, April 08, 2013 => 11:26 Monday, April 15, 2013
File: 091315Apr2013.EC0 (Regular)
Data type: Axle sensors - Separate (Count)

Profile:
Filter time: **0:00 Tuesday, April 09, 2013 => 0:00 Sunday, April 14, 2013**

* Tuesday, April 09, 2013=14431, 15 minute drops

0000	0100	0200	0300	0400	0500	0600	0700	0800	0900	1000	1100	1200	1300	1400	1500	1600	1700	1800	1900	2000	2100	2200	2300	
41	**19**	**20**	**22**	**41**	**140**	**383**	**1088**	**1308**	**925**	**810**	**887**	**1036**	**924**	**917**	**1080**	**983**	**976**	**820**	**706**	**569**	**463**	**183**	**97**	
17	5	9	4	7	18	52	176	**321**	223	201	214	233	225	190	256	**264**	247	208	197	169	127	65	39	10
10	8	4	5	3	29	61	226	**334**	258	215	230	317	246	237	**268**	244	255	209	172	160	139	50	22	15
5	1	3	6	11	37	121	287	**351**	240	189	204	240	234	251	**288**	232	257	219	194	124	115	39	15	12
9	5	4	7	20	57	150	**400**	303	205	205	240	247	219	240	**269**	244	218	185	144	117	82	29	21	8

AM Peak 0745 - 0845 (1404), AM PHF=0.88 PM Peak 1515 - 1615 (1088), PM PHF=0.94

* Wednesday, April 10, 2013=14561, 15 minute drops

0000	0100	0200	0300	0400	0500	0600	0700	0800	0900	1000	1100	1200	1300	1400	1500	1600	1700	1800	1900	2000	2100	2200	2300	
45	**22**	**22**	**18**	**47**	**135**	**416**	**1079**	**1312**	**952**	**808**	**934**	**1010**	**929**	**931**	**1045**	**1014**	**1089**	**863**	**671**	**527**	**377**	**193**	**127**	
10	8	12	2	8	15	61	170	**352**	236	234	219	225	235	211	260	272	**273**	222	219	142	108	60	39	8
15	6	5	7	7	28	80	217	**295**	233	187	232	265	251	231	264	255	**273**	232	170	105	93	51	38	15
12	4	4	3	12	32	101	286	**344**	247	190	251	273	212	244	265	249	**301**	208	150	138	85	47	24	10
8	4	1	7	21	61	175	**407**	322	237	198	233	248	232	247	256	239	**243**	201	132	143	92	35	26	6

AM Peak 0745 - 0845 (1397), AM PHF=0.86 PM Peak 1700 - 1800 (1089), PM PHF=0.91

* Thursday, April 11, 2013=14620, 15 minute drops

0000	0100	0200	0300	0400	0500	0600	0700	0800	0900	1000	1100	1200	1300	1400	1500	1600	1700	1800	1900	2000	2100	2200	2300	
39	**26**	**25**	**21**	**34**	**147**	**399**	**1050**	**1268**	**851**	**804**	**925**	**1083**	**952**	**1024**	**1037**	**1074**	**1137**	**812**	**705**	**517**	**359**	**197**	**140**	
8	7	6	4	3	24	46	182	**306**	246	197	208	257	252	263	272	273	**281**	224	195	170	85	55	38	21
15	7	10	7	5	22	78	165	**295**	227	197	212	287	253	273	247	272	**283**	189	188	121	110	67	35	21
10	6	7	5	8	38	112	318	**334**	176	202	245	266	237	248	276	280	**317**	195	146	108	82	35	46	19
6	6	2	5	18	64	164	**386**	333	202	208	260	273	211	241	242	250	**257**	205	176	120	83	40	21	15

AM Peak 0745 - 0845 (1321), AM PHF=0.86 PM Peak 1700 - 1800 (1137), PM PHF=0.90

* Friday, April 12, 2013=14938, 15 minute drops

0000	0100	0200	0300	0400	0500	0600	0700	0800	0900	1000	1100	1200	1300	1400	1500	1600	1700	1800	1900	2000	2100	2200	2300	
76	**40**	**26**	**26**	**38**	**128**	**384**	**979**	**1173**	**788**	**896**	**956**	**1163**	**998**	**1148**	**1073**	**1092**	**1037**	**860**	**619**	**523**	**433**	**284**	**200**	
21	15	9	5	5	22	55	165	**309**	207	229	218	**276**	266	242	246	275	271	242	182	127	110	89	65	26
21	8	7	5	8	18	84	197	**272**	203	226	259	**330**	260	300	289	267	299	239	171	144	131	56	52	28
19	7	2	8	9	31	91	287	**292**	182	228	236	**276**	233	283	283	287	250	209	125	145	101	76	42	25
15	10	8	8	16	58	155	**331**	302	197	214	244	**281**	240	324	256	264	218	171	141	109	92	64	42	29

AM Peak 0745 - 0845 (1202), AM PHF=0.91 PM Peak 1200 - 1300 (1163), PM PHF=0.88

* Saturday, April 13, 2013=11834, 15 minute drops

0000	0100	0200	0300	0400	0500	0600	0700	0800	0900	1000	1100	1200	1300	1400	1500	1600	1700	1800	1900	2000	2100	2200	2300	
108	**60**	**54**	**28**	**36**	**54**	**171**	**307**	**569**	**767**	**809**	**921**	**1030**	**1000**	**960**	**967**	**875**	**759**	**648**	**547**	**411**	**367**	**245**	**145**	
26	9	14	7	4	15	31	60	137	168	211	222	**246**	247	227	249	223	188	191	143	108	118	71	35	-
28	23	13	9	3	9	31	51	112	185	188	230	**239**	261	240	256	205	186	169	139	99	98	66	42	-
25	10	12	8	10	13	50	76	152	182	194	225	**287**	228	225	231	225	208	157	137	98	83	61	35	-
29	19	15	4	19	18	59	120	169	233	218	**245**	259	266	268	231	223	179	132	129	106	68	48	33	-

AM Peak 1145 - 1245 (1017), AM PHF=0.89

MetroCount Traffic Executive
Event Counts

2067 -- English (ENU)

Datasets:

Site:	**13.MORENA BLVD (WEST MORENA BLVD - NAPA ST) SOUTHBOUND**
Input A:	1 - North bound. - Lane= 0, Excluded from totals.
Input B:	3 - South bound. - Lane= 0, Added to totals. (/2.000)
Survey Duration:	15:48 Monday, April 08, 2013 => 11:26 Monday, April 15, 2013
File:	091315Apr2013.EC0 (Regular)
Data type:	Axle sensors - Separate (Count)

Profile:

Filter time:	**0:00 Tuesday, April 09, 2013 => 0:00 Sunday, April 14, 2013**

* Tuesday, April 09, 2013=14116, 15 minute drops

0000	0100	0200	0300	0400	0500	0600	0700	0800	0900	1000	1100	1200	1300	1400	1500	1600	1700	1800	1900	2000	2100	2200	2300	
34	**28**	**22**	**16**	**28**	**108**	**280**	**729**	**974**	**874**	**838**	**984**	**1055**	**986**	**953**	**1012**	**1288**	**1387**	**931**	**614**	**389**	**318**	**183**	**90**	
5	3	6	7	5	27	37	126	262	266	184	253	**266**	267	220	246	336	**397**	267	183	115	102	66	30	16
9	6	2	2	5	22	67	170	198	182	247	246	**288**	233	254	221	283	**347**	231	148	87	79	40	27	13
10	12	9	3	8	27	73	215	243	214	219	230	**265**	237	269	282	322	**329**	209	161	96	65	36	15	14
10	8	6	4	10	33	103	219	271	213	189	**256**	237	250	211	263	**347**	314	225	123	91	74	42	19	17

AM Peak 1145 - 1245 (1074), AM PHF=0.93 PM Peak 1645 - 1745 (1420), PM PHF=0.89

* Wednesday, April 10, 2013=14342, 15 minute drops

0000	0100	0200	0300	0400	0500	0600	0700	0800	0900	1000	1100	1200	1300	1400	1500	1600	1700	1800	1900	2000	2100	2200	2300	
60	**33**	**27**	**10**	**23**	**113**	**289**	**733**	**874**	**876**	**835**	**979**	**1040**	**992**	**933**	**1146**	**1301**	**1401**	**980**	**620**	**501**	**314**	**167**	**101**	
16	8	7	2	4	17	42	131	207	244	172	222	**264**	268	220	286	338	**470**	267	210	123	114	53	30	18
13	6	3	0	4	36	59	170	202	183	219	241	**266**	264	252	246	286	**325**	244	159	151	81	47	29	14
14	13	11	4	7	24	85	208	205	227	206	**274**	244	209	232	295	**356**	321	222	152	115	67	39	24	22
17	6	6	4	8	37	104	225	261	222	239	**243**	267	251	230	320	**321**	285	248	99	113	52	28	19	6

AM Peak 1130 - 1230 (1046), AM PHF=0.95 PM Peak 1630 - 1730 (1472), PM PHF=0.78

* Thursday, April 11, 2013=14550, 15 minute drops

0000	0100	0200	0300	0400	0500	0600	0700	0800	0900	1000	1100	1200	1300	1400	1500	1600	1700	1800	1900	2000	2100	2200	2300	
60	**35**	**22**	**14**	**41**	**93**	**284**	**698**	**929**	**783**	**824**	**989**	**1103**	**1059**	**980**	**1088**	**1314**	**1444**	**995**	**709**	**475**	**325**	**185**	**109**	
18	7	5	2	6	18	34	120	188	230	197	218	**273**	274	231	234	324	**406**	277	197	132	88	62	30	26
14	10	5	5	8	20	65	150	225	195	203	258	**264**	262	262	270	342	**371**	275	186	125	100	57	31	19
22	15	9	3	13	25	73	201	250	155	221	253	**285**	280	248	311	346	**364**	232	169	114	72	35	27	31
6	3	3	4	14	30	113	228	266	203	204	**261**	281	245	240	274	303	**304**	212	158	104	66	32	21	17

AM Peak 1145 - 1245 (1082), AM PHF=0.95 PM Peak 1700 - 1800 (1444), PM PHF=0.89

* Friday, April 12, 2013=14985, 15 minute drops

0000	0100	0200	0300	0400	0500	0600	0700	0800	0900	1000	1100	1200	1300	1400	1500	1600	1700	1800	1900	2000	2100	2200	2300	
93	**76**	**39**	**30**	**34**	**105**	**262**	**744**	**837**	**849**	**868**	**1032**	**1143**	**1042**	**990**	**1213**	**1395**	**1338**	**1029**	**664**	**456**	**373**	**222**	**157**	
26	22	11	8	5	17	35	112	238	206	204	251	**281**	289	244	297	344	**420**	296	211	133	92	65	54	49
19	9	14	9	7	26	62	151	173	228	186	266	**341**	239	253	289	329	**363**	310	183	117	104	54	43	35
31	29	9	8	9	30	71	227	184	208	208	**256**	244	277	247	291	**376**	293	224	148	113	109	55	35	38
17	17	5	5	14	33	95	254	243	208	270	**260**	277	237	246	336	**347**	262	200	123	94	68	49	26	83

AM Peak 1130 - 1230 (1137), AM PHF=0.83 PM Peak 1630 - 1730 (1506), PM PHF=0.90

* Saturday, April 13, 2013=12077, 15 minute drops

0000	0100	0200	0300	0400	0500	0600	0700	0800	0900	1000	1100	1200	1300	1400	1500	1600	1700	1800	1900	2000	2100	2200	2300	
204	**156**	**80**	**46**	**22**	**42**	**123**	**275**	**536**	**692**	**912**	**1001**	**991**	**1022**	**981**	**948**	**929**	**810**	**700**	**521**	**361**	**283**	**237**	**210**	
49	57	26	8	8	7	21	52	102	139	210	**269**	269	299	243	246	265	205	181	152	92	81	76	49	-
35	31	19	10	2	8	30	45	119	170	212	**253**	255	290	232	217	251	222	195	143	105	79	58	63	-
38	38	16	16	3	13	25	81	141	171	214	**237**	222	213	228	235	203	199	152	126	79	55	59	49	-
83	31	19	13	9	15	47	97	176	212	**276**	242	246	221	278	251	211	185	173	102	86	69	44	49	-

AM Peak 1045 - 1145 (1035), AM PHF=0.94

MetroCount Traffic Executive
Event Counts

2068 -- English (ENU)

Datasets:

Site:	**14.MORENA BLVD (NAPA ST/ SHERMAN ST - LINDA VISTA RD) NORTHBOUND**
Input A:	1 - North bound. - Lane= 0, Added to totals. (/2.000)
Input B:	3 - South bound. - Lane= 0, Excluded from totals.
Survey Duration:	13:58 Monday, April 08, 2013 => 9:53 Monday, April 15, 2013
File:	091415Apr2013.INCOMPLETE.EC0 (Base)
Data type:	Axle sensors - Separate (Count)

Profile:

Filter time:	**0:00 Tuesday, April 09, 2013 => 0:00 Thursday, April 11, 2013**

*** Tuesday, April 09, 2013=9175, 15 minute drops**

0000	0100	0200	0300	0400	0500	0600	0700	0800	0900	1000	1100	1200	1300	1400	1500	1600	1700	1800	1900	2000	2100	2200	2300	
31	**23**	**23**	**16**	**66**	**137**	**435**	**810**	**1067**	**664**	**562**	**586**	**650**	**602**	**557**	**627**	**537**	**471**	**421**	**311**	**256**	**180**	**92**	**58**	
14	10	9	4	10	15	57	142	**291**	167	167	153	**160**	140	126	163	140	111	115	83	78	52	32	19	13
8	5	4	1	16	31	77	176	**230**	178	151	162	**168**	167	157	151	144	136	117	76	65	51	23	14	8
4	1	5	6	13	35	128	234	**273**	189	108	136	**137**	151	130	163	118	108	99	94	73	43	21	15	6
5	7	6	6	28	58	174	258	**273**	131	137	135	**185**	145	144	150	135	117	90	59	41	35	16	11	5

AM Peak 0800 - 0900 (1067), AM PHF=0.92 PM Peak 1200 - 1300 (650), PM PHF=0.88

*** Wednesday, April 10, 2013=10856, 15 minute drops**

0000	0100	0200	0300	0400	0500	0600	0700	0800	0900	1000	1100	1200	1300	1400	1500	1600	1700	1800	1900	2000	2100	2200	2300	
31	**35**	**23**	**21**	**50**	**148**	**438**	**747**	**891**	**825**	**593**	**620**	**702**	**720**	**871**	**1008**	**853**	**821**	**606**	**380**	**259**	**99**	**66**	**54**	
13	15	8	4	6	23	65	123	**242**	177	176	138	157	155	182	252	259	216	176	124	112	26	13	11	-
8	11	10	5	8	30	101	139	**206**	217	126	150	179	175	172	247	197	205	157	97	54	26	19	28	-
6	3	4	4	15	25	103	203	**215**	247	134	182	187	147	186	291	192	193	132	73	64	30	24	10	-
5	7	1	8	22	71	170	**283**	229	185	158	150	180	244	332	219	205	209	142	86	29	17	11	6	-

AM Peak 0745 - 0845 (945), AM PHF=0.84

MetroCount Traffic Executive
Event Counts

2069 -- English (ENU)

Datasets:

Site:	**14.MORENA BLVD (NAPA ST/ SHERMAN ST - LINDA VISTA RD) SOUTHBOUND**
Input A:	1 - North bound. - Lane= 0, Excluded from totals.
Input B:	3 - South bound. - Lane= 0, Added to totals. (/2.000)
Survey Duration:	13:58 Monday, April 08, 2013 => 9:53 Monday, April 15, 2013
File:	091415Apr2013.INCOMPLETE.EC0 (Base)
Data type:	Axle sensors - Separate (Count)

Profile:

Filter time:	**0:00 Tuesday, April 09, 2013 => 0:00 Thursday, April 11, 2013**

*** Tuesday, April 09, 2013=11519, 15 minute drops**

0000	0100	0200	0300	0400	0500	0600	0700	0800	0900	1000	1100	1200	1300	1400	1500	1600	1700	1800	1900	2000	2100	2200	2300	
17	**14**	**14**	**14**	**25**	**88**	**164**	**481**	**663**	**693**	**677**	**910**	**867**	**892**	**744**	**990**	**1142**	**1066**	**823**	**519**	**322**	**213**	**119**	**66**	
8	4	0	8	3	21	34	83	203	174	187	**226**	188	250	168	197	324	**380**	264	171	106	74	48	26	11
3	3	2	0	3	16	37	118	118	161	164	**275**	192	255	182	206	262	**328**	198	128	75	57	30	20	13
3	7	8	4	8	20	34	118	202	195	188	**183**	263	192	189	333	**313**	200	226	130	63	35	20	9	9
3	0	4	2	12	31	59	163	140	163	139	**227**	225	196	205	254	**244**	159	136	90	79	48	21	12	6

AM Peak 1100 - 1200 (910), AM PHF=0.83 PM Peak 1630 - 1730 (1264), PM PHF=0.83

*** Wednesday, April 10, 2013=12167, 15 minute drops**

0000	0100	0200	0300	0400	0500	0600	0700	0800	0900	1000	1100	1200	1300	1400	1500	1600	1700	1800	1900	2000	2100	2200	2300	
38	**15**	**19**	**10**	**20**	**93**	**215**	**473**	**713**	**718**	**780**	**949**	**955**	**960**	**863**	**1058**	**1242**	**1015**	**804**	**463**	**380**	**232**	**100**	**57**	
11	6	4	2	4	7	39	92	194	176	199	180	**270**	258	214	278	380	416	238	178	85	95	29	23	-
13	2	1	0	1	36	43	117	159	152	192	**256**	226	284	245	238	250	243	208	117	107	53	20	20	-
9	5	10	5	3	22	58	124	177	213	186	**244**	245	202	210	314	366	192	181	101	93	43	35	10	-
6	2	5	4	13	28	76	141	184	177	204	**269**	215	217	194	229	247	165	178	68	96	42	18	4	-

AM Peak 1115 - 1215 (1038), AM PHF=0.96

MetroCount Traffic Executive
Event Counts

2103 -- English (ENU)

Datasets:

Site: **15.MORENA BLVD (SOUTH OF LINDA VISTA RD) NORTHBOUND**
Input A: 1 - North bound. - Lane= 0, Added to totals. (/2.000)
Input B: 3 - South bound. - Lane= 0, Excluded from totals.
Survey Duration: 13:26 Monday, April 08, 2013 => 9:46 Monday, April 15, 2013
File: 91515Apr2013.EC0 (Base)
Data type: Axle sensors - Separate (Count)

Profile:

Filter time: **0:00 Tuesday, April 09, 2013 => 0:00 Sunday, April 14, 2013**

* Tuesday, April 09, 2013=18710, 15 minute drops

0000	0100	0200	0300	0400	0500	0600	0700	0800	0900	1000	1100	1200	1300	1400	1500	1600	1700	1800	1900	2000	2100	2200	2300	
67	**44**	**38**	**35**	**127**	**447**	**770**	**1425**	**1625**	**1188**	**1062**	**1139**	**1257**	**1139**	**1161**	**1301**	**1270**	**1343**	**1048**	**720**	**605**	**463**	**264**	**178**	
31	17	15	8	14	65	106	259	**398**	294	289	275	317	262	287	314	323	**340**	277	189	161	115	81	50	31
17	7	4	7	25	127	164	333	**376**	311	298	302	328	292	311	322	311	**374**	272	185	166	119	73	48	22
8	8	10	8	29	121	208	435	**423**	313	239	267	291	289	286	341	293	**311**	230	175	160	110	52	38	17
11	12	9	12	60	135	293	399	**428**	272	236	296	321	297	277	325	**343**	319	270	171	119	119	59	43	13

AM Peak 0800 - 0900 (1625), AM PHF=0.95 PM Peak 1645 - 1745 (1367), PM PHF=0.91

* Wednesday, April 10, 2013=18323, 15 minute drops

0000	0100	0200	0300	0400	0500	0600	0700	0800	0900	1000	1100	1200	1300	1400	1500	1600	1700	1800	1900	2000	2100	2200	2300	
83	**64**	**43**	**38**	**102**	**345**	**762**	**1320**	**1569**	**1375**	**1063**	**1081**	**1240**	**1170**	**1170**	**1280**	**1209**	**1299**	**984**	**671**	**515**	**466**	**297**	**186**	
31	23	17	8	15	47	127	250	**400**	335	269	250	307	292	273	297	**325**	319	257	176	143	117	87	56	22
22	15	13	8	17	84	172	271	**373**	340	255	269	329	291	276	**332**	317	359	244	176	133	120	81	60	26
17	8	8	5	28	75	187	390	**416**	368	240	271	289	275	307	**329**	269	318	242	162	132	105	76	34	18
13	19	5	17	42	139	277	**410**	381	333	299	291	315	313	315	**322**	299	304	242	157	107	125	53	37	25

AM Peak 0745 - 0845 (1598), AM PHF=0.96 PM Peak 1515 - 1615 (1307), PM PHF=0.99

* Thursday, April 11, 2013=18809, 15 minute drops

0000	0100	0200	0300	0400	0500	0600	0700	0800	0900	1000	1100	1200	1300	1400	1500	1600	1700	1800	1900	2000	2100	2200	2300	
91	**55**	**43**	**41**	**111**	**431**	**726**	**1357**	**1553**	**1209**	**1033**	**1182**	**1248**	**1225**	**1229**	**1275**	**1320**	**1397**	**996**	**741**	**571**	**442**	**326**	**215**	
22	15	13	6	14	60	110	238	**338**	353	251	266	329	296	295	290	348	**391**	255	188	170	103	84	60	26
26	13	11	13	25	110	144	248	**359**	316	243	294	303	328	319	339	327	**381**	264	202	139	117	88	63	45
18	13	10	10	24	123	189	**421**	389	240	280	308	299	326	304	344	**315**	313	229	168	145	111	74	52	54
25	14	9	12	49	139	283	**451**	468	300	259	315	318	276	311	303	**330**	313	249	184	118	111	80	40	32

AM Peak 0730 - 0830 (1568), AM PHF=0.87 PM Peak 1630 - 1730 (1417), PM PHF=0.91

* Friday, April 12, 2013=19362, 15 minute drops

0000	0100	0200	0300	0400	0500	0600	0700	0800	0900	1000	1100	1200	1300	1400	1500	1600	1700	1800	1900	2000	2100	2200	2300	
156	**91**	**71**	**41**	**99**	**328**	**757**	**1277**	**1442**	**1187**	**1120**	**1203**	**1320**	**1289**	**1335**	**1310**	**1378**	**1239**	**967**	**799**	**645**	**521**	**499**	**292**	
26	32	23	12	15	38	133	234	**339**	306	285	300	345	327	293	319	**341**	289	257	206	174	127	113	110	35
45	24	16	6	15	76	162	310	**363**	309	282	302	307	330	371	334	**393**	322	240	221	176	139	129	72	49
54	11	17	9	29	92	173	372	**376**	276	262	275	311	318	343	**339**	302	306	231	174	170	136	116	56	48
32	24	15	14	40	123	290	362	**365**	297	292	327	358	314	328	**319**	343	323	240	199	126	120	142	55	41

AM Peak 0800 - 0900 (1442), AM PHF=0.96 PM Peak 1530 - 1630 (1391), PM PHF=0.89

* Saturday, April 13, 2013=14649, 15 minute drops

0000	0100	0200	0300	0400	0500	0600	0700	0800	0900	1000	1100	1200	1300	1400	1500	1600	1700	1800	1900	2000	2100	2200	2300	
172	**131**	**121**	**55**	**61**	**130**	**231**	**474**	**863**	**936**	**1012**	**1097**	**1247**	**1172**	**1106**	**1024**	**1030**	**873**	**728**	**641**	**512**	**448**	**377**	**212**	
35	27	41	15	11	20	26	83	164	221	244	240	**299**	304	267	246	266	240	181	183	139	121	105	60	-
49	46	42	10	13	31	56	99	199	230	265	259	**305**	281	285	268	263	213	178	172	124	130	109	59	-
48	27	21	11	15	34	51	119	228	236	238	299	**309**	306	257	249	265	219	186	136	129	117	99	49	-
41	31	17	19	22	46	98	174	272	250	265	**300**	335	282	298	262	236	202	183	151	120	81	64	44	-

AM Peak 1145 - 1245 (1212), AM PHF=0.98

MetroCount Traffic Executive
Event Counts

2104 -- English (ENU)

Datasets:

Site: **15.MORENA BLVD (SOUTH OF LINDA VISTA RD) SOUTHBOUND**
Input A: 1 - North bound. - Lane= 0, Excluded from totals.
Input B: 3 - South bound. - Lane= 0, Added to totals. (/2.000)
Survey Duration: 13:26 Monday, April 08, 2013 => 9:46 Monday, April 15, 2013
File: 91515Apr2013.EC0 (Base)
Data type: Axle sensors - Separate (Count)

Profile:
Filter time: **0:00 Tuesday, April 09, 2013 => 0:00 Sunday, April 14, 2013**

* Tuesday, April 09, 2013=17759, 15 minute drops

0000	0100	0200	0300	0400	0500	0600	0700	0800	0900	1000	1100	1200	1300	1400	1500	1600	1700	1800	1900	2000	2100	2200	2300	
54	**30**	**28**	**36**	**71**	**237**	**454**	**982**	**1008**	**911**	**919**	**1069**	**1247**	**1191**	**1212**	**1360**	**1474**	**1566**	**1195**	**916**	**700**	**653**	**284**	**168**	
22	5	1	9	7	44	92	186	283	215	226	250	**312**	298	298	302	391	**466**	335	273	210	188	95	67	34
12	8	2	5	12	44	102	256	209	229	198	284	**329**	324	274	314	368	**412**	296	243	170	202	74	39	21
10	12	18	8	23	56	109	242	277	244	240	247	**316**	279	331	383	**386**	374	305	203	161	137	61	35	16
11	5	7	14	29	95	152	298	240	224	255	**289**	291	290	310	361	**330**	315	259	197	159	127	54	27	14

AM Peak 1145 - 1245 (1245), AM PHF=0.95 PM Peak 1630 - 1730 (1592), PM PHF=0.85

* Wednesday, April 10, 2013=17953, 15 minute drops

0000	0100	0200	0300	0400	0500	0600	0700	0800	0900	1000	1100	1200	1300	1400	1500	1600	1700	1800	1900	2000	2100	2200	2300	
85	**36**	**57**	**36**	**65**	**222**	**435**	**955**	**1034**	**898**	**945**	**1061**	**1189**	**1205**	**1246**	**1440**	**1542**	**1580**	**1248**	**953**	**733**	**516**	**291**	**184**	
34	13	10	4	12	27	86	190	279	220	234	225	**296**	316	269	408	429	**476**	355	307	163	165	94	62	21
21	6	11	8	10	52	91	231	247	204	256	311	**320**	339	322	337	358	**393**	281	259	185	124	77	46	21
16	12	23	10	13	71	123	251	247	231	233	287	**302**	268	342	366	**410**	403	287	219	204	106	77	40	23
14	5	14	14	31	73	135	284	262	244	223	**239**	272	283	315	329	**346**	309	326	169	181	122	43	36	17

AM Peak 1145 - 1245 (1156), AM PHF=0.90 PM Peak 1630 - 1730 (1624), PM PHF=0.85

* Thursday, April 11, 2013=18320, 15 minute drops

0000	0100	0200	0300	0400	0500	0600	0700	0800	0900	1000	1100	1200	1300	1400	1500	1600	1700	1800	1900	2000	2100	2200	2300	
82	**53**	**49**	**38**	**79**	**200**	**451**	**1020**	**978**	**875**	**955**	**1066**	**1322**	**1194**	**1326**	**1402**	**1602**	**1616**	**1242**	**983**	**718**	**586**	**293**	**194**	
21	12	11	4	14	32	66	219	262	246	200	221	**316**	292	302	330	454	**457**	337	288	212	166	99	78	37
21	14	7	8	13	45	104	234	231	212	247	271	**338**	292	313	335	370	**370**	320	249	175	166	84	39	36
23	15	25	9	16	59	126	257	238	215	247	279	**354**	306	381	386	426	**433**	298	233	180	132	64	43	35
17	12	6	17	36	64	156	311	248	203	262	**296**	315	305	330	352	352	**358**	287	214	152	123	47	34	30

AM Peak 1145 - 1245 (1303), AM PHF=0.92 PM Peak 1700 - 1800 (1616), PM PHF=0.88

* Friday, April 12, 2013=19021, 15 minute drops

0000	0100	0200	0300	0400	0500	0600	0700	0800	0900	1000	1100	1200	1300	1400	1500	1600	1700	1800	1900	2000	2100	2200	2300	
138	**69**	**70**	**43**	**66**	**203**	**462**	**950**	**1069**	**948**	**1017**	**1217**	**1355**	**1331**	**1395**	**1492**	**1594**	**1617**	**1250**	**916**	**624**	**545**	**383**	**273**	
37	21	14	13	16	34	86	163	306	224	251	260	**350**	342	340	384	422	**447**	375	288	211	143	109	107	46
36	13	10	12	14	45	103	235	242	257	251	326	**370**	349	311	356	367	**432**	347	260	158	125	109	69	47
35	20	34	10	15	55	123	250	266	231	258	324	**340**	317	406	396	**456**	407	268	205	147	175	76	55	42
30	15	12	9	22	70	151	303	255	237	258	**308**	296	324	339	357	**350**	333	261	164	108	103	90	42	93

AM Peak 1145 - 1245 (1367), AM PHF=0.92 PM Peak 1630 - 1730 (1684), PM PHF=0.92

* Saturday, April 13, 2013=14562, 15 minute drops

0000	0100	0200	0300	0400	0500	0600	0700	0800	0900	1000	1100	1200	1300	1400	1500	1600	1700	1800	1900	2000	2100	2200	2300	
228	**171**	**117**	**57**	**70**	**109**	**197**	**354**	**612**	**794**	**939**	**1090**	**1204**	**1201**	**1141**	**1183**	**1145**	**1000**	**814**	**663**	**499**	**421**	**315**	**243**	
46	64	30	14	19	21	38	70	113	163	238	273	**296**	322	276	306	318	262	240	180	154	126	88	66	-
47	44	16	21	15	26	54	64	150	182	206	284	**303**	316	259	312	285	270	215	161	122	101	81	64	-
42	35	42	12	10	26	53	119	182	226	253	262	**318**	295	314	299	296	253	182	161	101	107	88	58	-
93	28	29	11	26	37	53	102	167	224	243	**272**	288	269	293	266	247	216	178	162	123	88	59	56	-

AM Peak 1145 - 1245 (1188), AM PHF=0.93

MetroCount Traffic Executive
Event Counts

2095 -- English (ENU)

Datasets:

Site: **29.LINDA VISTA RD (MORENA BLVD - NAPA ST) EASTBOUND**
Input A: 2 - East bound. - Lane= 0, Added to totals. (/2.000)
Input B: 4 - West bound. - Lane= 0, Excluded from totals.
Survey Duration: 13:16 Monday, April 08, 2013 => 8:49 Monday, April 15, 2013
File: 092915Apr2013.EC0 (Base)
Data type: Axle sensors - Separate (Count)

Profile:
Filter time: **0:00 Tuesday, April 09, 2013 => 0:00 Sunday, April 14, 2013**

* Tuesday, April 09, 2013=11149, 15 minute drops

0000	0100	0200	0300	0400	0500	0600	0700	0800	0900	1000	1100	1200	1300	1400	1500	1600	1700	1800	1900	2000	2100	2200	2300	
33	**25**	**17**	**16**	**68**	**314**	**400**	**742**	**822**	**631**	**580**	**606**	**732**	**694**	**724**	**784**	**797**	**961**	**707**	**465**	**396**	**315**	**198**	**127**	
15	5	5	4	5	48	59	143	166	**171**	142	141	181	166	181	185	200	**251**	177	126	109	76	67	33	20
6	7	1	5	11	97	101	191	**187**	146	172	153	212	166	192	198	201	**257**	182	126	103	84	50	34	16
6	6	6	2	18	92	93	229	**212**	159	145	142	174	169	186	195	184	**226**	158	97	99	76	37	24	13
6	7	5	5	34	78	147	180	**258**	156	121	171	165	193	166	207	213	**228**	191	116	86	79	44	36	9

AM Peak 0815 - 0915 (827), AM PHF=0.80 PM Peak 1700 - 1800 (961), PM PHF=0.93

* Wednesday, April 10, 2013=10812, 15 minute drops

0000	0100	0200	0300	0400	0500	0600	0700	0800	0900	1000	1100	1200	1300	1400	1500	1600	1700	1800	1900	2000	2100	2200	2300	
58	**32**	**27**	**17**	**54**	**201**	**394**	**680**	**804**	**684**	**577**	**564**	**717**	**678**	**676**	**818**	**831**	**861**	**700**	**443**	**323**	**321**	**233**	**124**	
20	11	11	6	9	23	65	141	191	**196**	138	122	182	173	155	185	211	**220**	180	110	76	82	78	38	17
16	7	7	2	11	57	86	143	**191**	154	148	152	189	182	162	206	226	**230**	159	128	87	85	65	38	17
13	4	5	2	13	47	97	207	**213**	160	126	125	156	139	177	216	178	**217**	175	112	90	67	49	24	12
9	10	4	7	21	74	146	190	**210**	175	166	166	190	184	183	211	**217**	195	187	93	71	88	42	24	13

AM Peak 0815 - 0915 (809), AM PHF=0.95 PM Peak 1645 - 1745 (883), PM PHF=0.96

* Thursday, April 11, 2013=11077, 15 minute drops

0000	0100	0200	0300	0400	0500	0600	0700	0800	0900	1000	1100	1200	1300	1400	1500	1600	1700	1800	1900	2000	2100	2200	2300	
59	**32**	**22**	**20**	**57**	**285**	**346**	**669**	**751**	**684**	**567**	**618**	**742**	**711**	**694**	**800**	**835**	**936**	**657**	**503**	**392**	**311**	**234**	**156**	
17	7	6	5	11	43	54	131	168	**215**	125	130	192	143	150	173	199	**274**	163	137	100	77	63	46	18
17	8	4	7	11	83	79	147	**178**	175	139	150	171	187	181	207	211	**243**	177	138	99	87	56	43	31
12	9	5	5	11	82	86	199	**174**	136	151	166	170	192	180	219	202	**215**	160	114	97	73	56	33	36
13	8	7	3	25	78	127	192	**232**	159	153	173	211	189	184	202	**224**	205	158	115	97	75	59	34	23

AM Peak 0815 - 0915 (798), AM PHF=0.86 PM Peak 1645 - 1745 (955), PM PHF=0.87

* Friday, April 12, 2013=11322, 15 minute drops

0000	0100	0200	0300	0400	0500	0600	0700	0800	0900	1000	1100	1200	1300	1400	1500	1600	1700	1800	1900	2000	2100	2200	2300	
108	**53**	**40**	**17**	**50**	**192**	**369**	**702**	**764**	**649**	**612**	**648**	**749**	**801**	**782**	**778**	**867**	**783**	**613**	**498**	**400**	**319**	**356**	**176**	
18	15	16	5	9	23	70	135	**166**	158	145	155	191	197	180	196	**215**	189	172	129	98	73	75	65	24
31	18	6	1	6	47	79	154	**201**	165	158	153	175	215	229	201	**230**	195	150	135	119	77	91	46	28
36	8	11	5	15	54	86	**220**	203	160	138	153	183	203	204	205	**197**	185	140	105	106	82	88	38	32
23	12	7	6	20	69	135	**194**	195	167	171	188	201	187	170	178	**226**	214	152	130	78	87	102	27	21

AM Peak 0730 - 0830 (780), AM PHF=0.89 PM Peak 1600 - 1700 (867), PM PHF=0.94

* Saturday, April 13, 2013=8513, 15 minute drops

0000	0100	0200	0300	0400	0500	0600	0700	0800	0900	1000	1100	1200	1300	1400	1500	1600	1700	1800	1900	2000	2100	2200	2300	
104	**87**	**81**	**37**	**26**	**69**	**101**	**256**	**550**	**485**	**572**	**636**	**709**	**652**	**624**	**595**	**629**	**542**	**408**	**351**	**303**	**292**	**256**	**153**	
24	19	30	9	6	9	7	44	98	131	138	141	**174**	145	142	142	184	152	88	87	86	67	72	44	-
28	31	31	6	7	14	26	60	129	142	134	148	**173**	186	154	151	165	130	100	94	65	81	74	45	-
32	18	12	7	7	28	22	54	151	101	152	**184**	165	167	155	139	147	138	110	79	79	76	61	36	-
21	19	8	15	6	19	47	99	173	112	149	**164**	197	154	174	164	134	122	110	91	74	68	49	29	-

AM Peak 1130 - 1230 (694), AM PHF=0.95

MetroCount Traffic Executive
Event Counts

2096 -- English (ENU)

Datasets:

Site:	**29.LINDA VISTA RD (MORENA BLVD - NAPA ST) WESTBOUND**
Input A:	2 - East bound. - Lane= 0, Excluded from totals.
Input B:	4 - West bound. - Lane= 0, Added to totals. (/2.000)
Survey Duration:	13:16 Monday, April 08, 2013 => 8:49 Monday, April 15, 2013
File:	092915Apr2013.EC0 (Base)
Data type:	Axle sensors - Separate (Count)

Profile:

Filter time: **0:00 Tuesday, April 09, 2013 => 0:00 Sunday, April 14, 2013**

* Tuesday, April 09, 2013=10917, 15 minute drops

0000	0100	0200	0300	0400	0500	0600	0700	0800	0900	1000	1100	1200	1300	1400	1500	1600	1700	1800	1900	2000	2100	2200	2300	
42	**17**	**19**	**26**	**53**	**178**	**349**	**717**	**634**	**498**	**523**	**550**	**761**	**692**	**731**	**800**	**794**	**929**	**736**	**571**	**488**	**491**	**201**	**122**	
16	0	1	3	6	26	75	144	169	116	109	130	**206**	175	179	187	216	**272**	204	174	142	133	70	47	22
9	5	0	6	11	33	66	182	139	126	110	129	**225**	187	172	188	209	**227**	176	152	118	161	47	24	11
8	6	14	5	18	41	90	173	171	133	141	145	**169**	163	195	192	196	**240**	192	119	118	114	48	29	8
10	6	4	13	19	78	119	218	155	124	163	**148**	161	167	186	234	174	**191**	165	127	111	84	37	22	9

AM Peak 1145 - 1245 (748), AM PHF=0.83 PM Peak 1700 - 1800 (929), PM PHF=0.86

* Wednesday, April 10, 2013=10783, 15 minute drops

0000	0100	0200	0300	0400	0500	0600	0700	0800	0900	1000	1100	1200	1300	1400	1500	1600	1700	1800	1900	2000	2100	2200	2300	
50	**26**	**45**	**27**	**50**	**163**	**328**	**661**	**662**	**503**	**508**	**584**	**659**	**662**	**727**	**810**	**822**	**953**	**759**	**634**	**467**	**336**	**218**	**136**	
22	9	7	4	8	20	62	139	**194**	126	124	132	151	173	139	261	225	**242**	211	201	111	90	76	40	16
11	4	13	7	9	31	69	152	**159**	116	139	170	199	197	171	188	205	**231**	161	169	105	83	59	30	18
8	10	15	5	11	58	88	**169**	150	124	134	158	163	145	220	183	194	**276**	170	148	127	73	50	32	15
9	3	10	11	22	54	110	**202**	160	138	111	124	147	148	198	179	199	**204**	218	116	124	91	34	35	12

AM Peak 0730 - 0830 (723), AM PHF=0.90 PM Peak 1700 - 1800 (953), PM PHF=0.86

* Thursday, April 11, 2013=11113, 15 minute drops

0000	0100	0200	0300	0400	0500	0600	0700	0800	0900	1000	1100	1200	1300	1400	1500	1600	1700	1800	1900	2000	2100	2200	2300	
60	**42**	**32**	**30**	**50**	**147**	**339**	**745**	**600**	**501**	**524**	**580**	**773**	**673**	**774**	**791**	**870**	**951**	**767**	**622**	**474**	**430**	**196**	**147**	
16	9	7	3	14	21	44	165	179	143	111	119	**181**	189	179	202	253	**245**	216	196	136	113	59	64	30
18	9	4	4	9	37	72	174	137	120	119	126	**208**	143	184	192	207	**225**	177	143	118	120	60	25	28
15	11	18	9	7	44	108	185	152	120	144	161	**209**	157	227	184	219	**263**	210	141	112	100	47	31	17
12	14	3	14	21	46	116	221	133	119	151	**175**	177	185	185	214	192	**219**	165	142	109	98	30	27	14

AM Peak 1145 - 1245 (771), AM PHF=0.92 PM Peak 1700 - 1800 (951), PM PHF=0.91

* Friday, April 12, 2013=11281, 15 minute drops

0000	0100	0200	0300	0400	0500	0600	0700	0800	0900	1000	1100	1200	1300	1400	1500	1600	1700	1800	1900	2000	2100	2200	2300	
88	**32**	**49**	**35**	**44**	**145**	**330**	**649**	**690**	**545**	**563**	**666**	**766**	**788**	**831**	**820**	**862**	**909**	**738**	**572**	**378**	**335**	**261**	**193**	
30	11	10	10	13	25	62	124	198	134	149	134	**199**	196	207	240	216	**255**	225	191	124	76	70	84	22
28	8	5	7	9	33	70	159	168	142	138	192	**211**	212	172	180	223	**226**	200	154	92	77	67	50	30
17	5	26	10	8	37	88	159	177	127	156	176	**199**	188	239	218	246	**235**	160	123	97	114	58	33	20
14	8	9	8	15	50	111	208	147	143	121	**164**	157	192	213	183	177	**194**	154	105	65	69	66	27	31

AM Peak 1145 - 1245 (773), AM PHF=0.92 PM Peak 1700 - 1800 (909), PM PHF=0.89

* Saturday, April 13, 2013=8535, 15 minute drops

0000	0100	0200	0300	0400	0500	0600	0700	0800	0900	1000	1100	1200	1300	1400	1500	1600	1700	1800	1900	2000	2100	2200	2300	
103	**88**	**82**	**32**	**58**	**81**	**149**	**225**	**391**	**526**	**491**	**620**	**689**	**632**	**623**	**729**	**688**	**576**	**443**	**394**	**310**	**286**	**198**	**129**	
22	26	20	10	18	19	28	48	75	130	131	151	**153**	173	141	213	184	159	125	103	102	95	58	49	-
30	23	11	12	13	17	41	45	91	120	104	157	**173**	162	150	183	182	140	129	79	73	56	43	27	-
20	24	30	4	10	20	41	64	122	141	133	161	**203**	157	174	184	172	147	104	101	57	76	54	24	-
31	16	22	6	17	25	39	69	104	135	125	**152**	161	140	158	149	150	131	85	111	79	60	44	29	-

AM Peak 1145 - 1245 (680), AM PHF=0.84

MetroCount Traffic Executive
Event Counts

2097 -- English (ENU)

Datasets:

Site:	**30.LINDA VISTA RD (NAPA ST - MARIAN WY) EASTBOUND**
Input A:	2 - East bound. - Lane= 0, Added to totals. (/2.000)
Input B:	0 - Unused or unknown. - Lane= 0, Excluded from totals.
Survey Duration:	12:58 Monday, April 08, 2013 => 11:22 Monday, April 15, 2013
File:	0930E15Apr2013.EC0 (Plus)
Data type:	Axle sensors - Separate (Count)

Profile:

Filter time: **0:00 Tuesday, April 09, 2013 => 0:00 Sunday, April 14, 2013**

* Tuesday, April 09, 2013=13313, 15 minute drops

0000	0100	0200	0300	0400	0500	0600	0700	0800	0900	1000	1100	1200	1300	1400	1500	1600	1700	1800	1900	2000	2100	2200	2300	
52	**32**	**13**	**18**	**27**	**243**	**372**	**971**	**1049**	**754**	**768**	**688**	**807**	**819**	**901**	**877**	**983**	**1166**	**889**	**573**	**490**	**410**	**271**	**145**	
21	5	3	7	1	40	49	159	214	**272**	183	138	230	181	212	209	255	**319**	233	154	149	99	94	37	23
9	11	1	6	0	72	78	244	**223**	153	241	182	227	219	276	200	211	**305**	236	153	108	105	70	40	17
7	6	6	2	8	86	114	313	**271**	160	213	170	188	187	224	220	219	**249**	191	129	112	107	56	27	13
15	10	3	3	18	46	131	255	**343**	170	131	198	163	233	190	248	**299**	294	229	138	121	99	52	41	16

AM Peak 0815 - 0915 (1108), AM PHF=0.81 PM Peak 1645 - 1745 (1171), PM PHF=0.92

* Wednesday, April 10, 2013=13046, 15 minute drops

0000	0100	0200	0300	0400	0500	0600	0700	0800	0900	1000	1100	1200	1300	1400	1500	1600	1700	1800	1900	2000	2100	2200	2300	
69	**64**	**34**	**16**	**34**	**121**	**320**	**842**	**954**	**785**	**668**	**685**	**856**	**780**	**849**	**1026**	**956**	**1164**	**849**	**601**	**477**	**411**	**311**	**178**	
23	15	11	3	4	21	43	153	206	**214**	159	152	231	186	214	215	222	**302**	216	165	129	120	99	51	29
17	15	9	3	4	33	55	178	**230**	159	162	180	197	217	229	257	231	**315**	180	173	136	110	90	45	19
13	18	6	3	8	21	86	252	**261**	190	165	162	203	174	209	268	245	**282**	206	149	108	91	64	36	24
16	16	8	7	18	47	136	259	**258**	223	183	192	226	205	198	286	258	**266**	248	115	105	91	60	47	12

AM Peak 0815 - 0915 (962), AM PHF=0.92 PM Peak 1700 - 1800 (1164), PM PHF=0.93

* Thursday, April 11, 2013=13538, 15 minute drops

0000	0100	0200	0300	0400	0500	0600	0700	0800	0900	1000	1100	1200	1300	1400	1500	1600	1700	1800	1900	2000	2100	2200	2300	
84	**42**	**25**	**12**	**31**	**225**	**312**	**893**	**1062**	**848**	**719**	**662**	**833**	**844**	**860**	**926**	**978**	**1180**	**872**	**629**	**538**	**435**	**302**	**229**	
29	9	6	4	7	38	39	148	206	**296**	163	140	240	186	224	194	233	**329**	226	165	138	110	93	70	29
19	9	7	3	1	60	60	204	**248**	245	185	145	206	199	227	222	247	**295**	240	163	161	121	78	55	39
24	14	6	2	4	77	88	294	**284**	137	203	176	185	237	216	244	239	**298**	220	151	111	99	67	58	47
12	10	6	3	19	50	126	248	**325**	171	169	202	203	223	194	267	**260**	258	187	151	129	107	64	47	32

AM Peak 0815 - 0915 (1152), AM PHF=0.89 PM Peak 1645 - 1745 (1182), PM PHF=0.90

* Friday, April 12, 2013=13202, 15 minute drops

0000	0100	0200	0300	0400	0500	0600	0700	0800	0900	1000	1100	1200	1300	1400	1500	1600	1700	1800	1900	2000	2100	2200	2300	
147	**85**	**50**	**27**	**34**	**132**	**304**	**788**	**873**	**736**	**650**	**731**	**831**	**900**	**895**	**883**	**1011**	**1004**	**833**	**665**	**516**	**437**	**417**	**259**	
29	22	20	10	5	17	45	139	172	**193**	155	189	221	247	187	216	241	**226**	241	161	128	98	87	95	51
39	21	11	6	5	28	58	149	**208**	168	148	172	216	223	244	210	230	**274**	186	175	146	107	94	68	40
47	25	12	5	8	42	84	256	**233**	182	132	178	187	220	244	234	**281**	253	201	159	130	121	108	58	43
32	17	7	6	16	45	117	245	**261**	194	217	193	208	212	221	224	**260**	252	205	170	113	112	129	39	37

AM Peak 0815 - 0915 (894), AM PHF=0.86 PM Peak 1630 - 1730 (1040), PM PHF=0.93

* Saturday, April 13, 2013=10230, 15 minute drops

0000	0100	0200	0300	0400	0500	0600	0700	0800	0900	1000	1100	1200	1300	1400	1500	1600	1700	1800	1900	2000	2100	2200	2300	
171	**166**	**113**	**46**	**32**	**44**	**69**	**236**	**659**	**503**	**566**	**723**	**755**	**776**	**714**	**713**	**806**	**728**	**573**	**458**	**388**	**423**	**334**	**238**	
51	42	42	18	6	6	10	35	99	141	143	171	**199**	186	184	163	212	179	150	124	114	101	106	61	-
40	44	41	8	12	7	15	45	158	136	126	**176**	169	208	165	191	230	192	160	117	78	119	85	74	-
43	40	17	9	7	19	15	66	178	105	145	**190**	179	203	162	170	193	186	127	105	97	111	75	55	-
37	40	13	11	7	12	29	91	225	122	153	**187**	209	180	204	190	172	171	137	114	100	93	69	49	-

AM Peak 1115 - 1215 (751), AM PHF=0.95

MetroCount Traffic Executive
Event Counts

2099 -- English (ENU)

Datasets:

Site:	**30.LINDA VISTA RD (NAPA ST - MARIAN WY) WESTBOUND**
Input A:	4 - West bound. - Lane= 0, Added to totals. (/2.000)
Input B:	0 - Unused or unknown. - Lane= 0, Excluded from totals.
Survey Duration:	13:00 Monday, April 08, 2013 => 11:55 Monday, April 15, 2013
File:	0930W15Apr2013.EC0 (Base)
Data type:	Axle sensors - Separate (Count)

Profile:

Filter time: **0:00 Tuesday, April 09, 2013 => 0:00 Sunday, April 14, 2013**

* Tuesday, April 09, 2013=13051, 15 minute drops

0000	0100	0200	0300	0400	0500	0600	0700	0800	0900	1000	1100	1200	1300	1400	1500	1600	1700	1800	1900	2000	2100	2200	2300	
55	**18**	**17**	**18**	**47**	**150**	**330**	**811**	**679**	**551**	**608**	**603**	**907**	**740**	**867**	**967**	**1039**	**1136**	**858**	**763**	**744**	**723**	**273**	**151**	
23	3	2	1	8	24	53	160	186	134	119	124	**249**	188	192	233	351	**275**	221	258	189	179	103	63	34
14	5	0	7	7	30	69	192	174	141	127	132	**323**	197	193	231	244	**306**	211	198	197	257	62	33	29
10	6	13	4	17	33	94	207	184	136	161	163	**174**	189	263	214	224	**314**	209	150	185	153	58	26	11
8	4	2	6	15	63	115	253	136	140	202	**185**	161	167	220	290	220	**242**	218	157	174	135	51	29	11

AM Peak 1145 - 1245 (930), AM PHF=0.72 PM Peak 1700 - 1800 (1136), PM PHF=0.91

* Wednesday, April 10, 2013=13033, 15 minute drops

0000	0100	0200	0300	0400	0500	0600	0700	0800	0900	1000	1100	1200	1300	1400	1500	1600	1700	1800	1900	2000	2100	2200	2300	
85	**30**	**39**	**23**	**42**	**135**	**303**	**762**	**702**	**556**	**514**	**642**	**760**	**680**	**843**	**981**	**1114**	**1304**	**988**	**860**	**658**	**538**	**294**	**184**	
34	5	14	5	4	16	55	159	**190**	144	154	153	162	185	157	283	397	**308**	210	294	120	153	99	61	23
29	7	7	5	8	25	65	**167**	152	147	134	177	246	186	184	229	235	**350**	237	224	135	123	75	47	19
11	8	14	7	14	45	78	**187**	178	139	133	183	194	158	256	225	225	**381**	206	182	179	114	62	39	15
11	10	4	6	16	50	106	**249**	183	127	93	129	159	152	246	244	258	**266**	336	160	225	150	58	37	16

AM Peak 0715 - 0815 (793), AM PHF=0.80 PM Peak 1700 - 1800 (1304), PM PHF=0.86

* Thursday, April 11, 2013=13330, 15 minute drops

0000	0100	0200	0300	0400	0500	0600	0700	0800	0900	1000	1100	1200	1300	1400	1500	1600	1700	1800	1900	2000	2100	2200	2300	
73	**37**	**34**	**20**	**37**	**149**	**326**	**824**	**674**	**540**	**606**	**659**	**1035**	**715**	**882**	**913**	**1214**	**1301**	**875**	**791**	**641**	**563**	**257**	**169**	
23	9	14	3	13	20	48	174	201	143	131	151	**259**	188	227	218	425	**305**	234	250	177	146	86	66	45
19	7	4	3	6	26	69	189	162	146	125	125	**365**	195	212	186	287	**340**	197	180	148	162	71	38	42
15	9	13	6	5	45	80	224	162	121	168	182	**212**	155	243	233	256	**394**	224	167	163	137	50	36	22
16	12	3	8	13	58	130	238	149	131	183	**202**	199	177	201	277	248	**263**	220	194	154	120	51	30	25

AM Peak 1145 - 1245 (1038), AM PHF=0.71 PM Peak 1700 - 1800 (1301), PM PHF=0.83

* Friday, April 12, 2013=12791, 15 minute drops

0000	0100	0200	0300	0400	0500	0600	0700	0800	0900	1000	1100	1200	1300	1400	1500	1600	1700	1800	1900	2000	2100	2200	2300	
134	**45**	**43**	**24**	**39**	**136**	**321**	**742**	**718**	**559**	**607**	**732**	**1041**	**828**	**1031**	**940**	**980**	**1019**	**784**	**608**	**475**	**425**	**337**	**229**	
45	19	18	9	9	17	58	142	189	147	170	165	**238**	211	251	**250**	251	294	211	173	135	102	85	92	37
42	8	3	7	8	28	68	166	170	138	155	196	**340**	243	217	**242**	263	271	232	163	135	103	82	69	28
22	13	18	3	7	39	87	190	181	142	152	188	**257**	197	**297**	232	273	240	168	145	122	144	82	40	36
25	6	4	5	16	52	108	244	180	133	132	**183**	207	178	**266**	217	194	214	173	127	84	78	88	28	22

AM Peak 1145 - 1245 (1017), AM PHF=0.75 PM Peak 1430 - 1530 (1054), PM PHF=0.89

* Saturday, April 13, 2013=9528, 15 minute drops

0000	0100	0200	0300	0400	0500	0600	0700	0800	0900	1000	1100	1200	1300	1400	1500	1600	1700	1800	1900	2000	2100	2200	2300	
123	**102**	**75**	**34**	**50**	**66**	**148**	**280**	**455**	**563**	**516**	**639**	**727**	**726**	**683**	**823**	**740**	**633**	**499**	**436**	**397**	**384**	**280**	**155**	
37	24	27	15	11	17	26	50	102	134	134	153	**180**	173	135	233	199	144	161	109	105	134	68	48	-
28	33	12	9	11	9	35	53	97	123	99	164	**178**	163	171	214	181	166	120	83	94	82	70	38	-
36	21	28	4	11	19	47	87	130	150	138	174	**185**	181	196	205	191	194	125	123	85	90	69	31	-
22	24	8	7	17	21	40	90	126	157	145	**149**	185	210	182	172	169	130	93	122	113	79	74	38	-

AM Peak 1145 - 1245 (691), AM PHF=0.93

24 Hour Segment Count

Accurate Video Counts Inc
info@accuratevideocounts.com
(619) 987-5136

Location: Linda Vista Road btw Marian Way to Colusa Street

Orientation: *East-West*

Date of Count: *Wednesday, May 07, 2014*

Analysts: *DASH*

Weather: *Sunny*

AVC Proj. No: *14-0199*

24 Hour Segment Volume ***18,880***

Time	Hourly Volume			Time	Hourly Volume		
	EB	WB	Total		EB	WB	Total
12:00 AM - 1:00 AM	98	59	157	12:00 PM - 1:00 PM	563	555	1,118
1:00 AM - 2:00 AM	54	31	85	1:00 PM - 2:00 PM	543	542	1,085
2:00 AM - 3:00 AM	32	27	59	2:00 PM - 3:00 PM	623	582	1,205
3:00 AM - 4:00 AM	13	17	30	3:00 PM - 4:00 PM	720	713	1,433
4:00 AM - 5:00 AM	22	35	57	4:00 PM - 5:00 PM	794	654	1,448
5:00 AM - 6:00 AM	65	124	189	5:00 PM - 6:00 PM	885	817	1,702
6:00 AM - 7:00 AM	161	318	479	6:00 PM - 7:00 PM	672	626	1,298
7:00 AM - 8:00 AM	565	687	1,252	7:00 PM - 8:00 PM	556	538	1,094
8:00 AM - 9:00 AM	477	665	1,142	8:00 PM - 9:00 PM	463	401	864
9:00 AM - 10:00 AM	393	454	847	9:00 PM - 10:00 PM	393	377	770
10:00 AM - 11:00 AM	358	415	773	10:00 PM - 11:00 PM	264	223	487
11:00 AM - 12:00 PM	444	572	1016	11:00 PM - 12:00 AM	166	124	290
Total	**2,682**	**3,404**	**6,086**	**Total**	**6,642**	**6,152**	**12,794**

24-Hour EB Volume 9,324 ***24-Hour WB Volume 9,556***

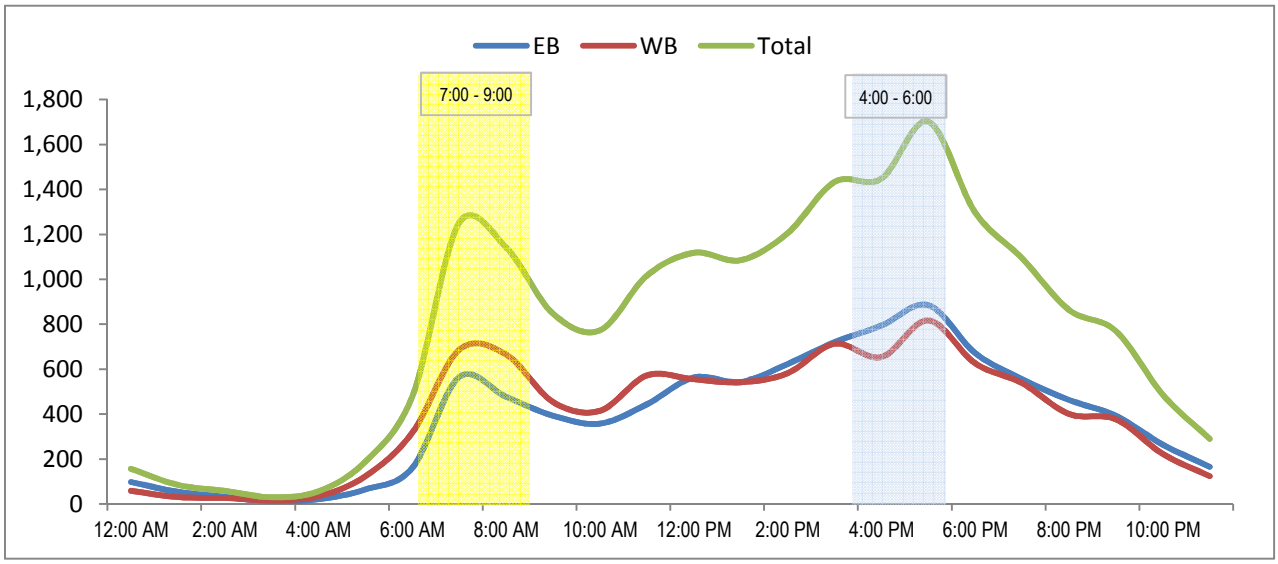

24 Hour Segment Count

Accurate Video Counts Inc
info@accuratevideocounts.com
(619) 987-5136

Location: Linda Vista Road btw Colusa Street to Alcala Parkway

Orientation: *East-West*

Date of Count: *Wednesday, May 07, 2014*

Analysts: *DASH*

Weather: *Sunny*

AVC Proj. No: *14-0199*

24 Hour Segment Volume ***18,938***

Time	Hourly Volume			Time	Hourly Volume		
	EB	WB	Total		EB	WB	Total
12:00 AM - 1:00 AM	86	64	150	12:00 PM - 1:00 PM	564	572	1,136
1:00 AM - 2:00 AM	59	32	91	1:00 PM - 2:00 PM	544	537	1,081
2:00 AM - 3:00 AM	22	26	48	2:00 PM - 3:00 PM	630	582	1,212
3:00 AM - 4:00 AM	8	15	23	3:00 PM - 4:00 PM	710	702	1,412
4:00 AM - 5:00 AM	24	31	55	4:00 PM - 5:00 PM	808	686	1,494
5:00 AM - 6:00 AM	61	111	172	5:00 PM - 6:00 PM	890	834	1,724
6:00 AM - 7:00 AM	153	292	445	6:00 PM - 7:00 PM	648	645	1,293
7:00 AM - 8:00 AM	628	629	1,257	7:00 PM - 8:00 PM	536	549	1,085
8:00 AM - 9:00 AM	548	630	1,178	8:00 PM - 9:00 PM	416	414	830
9:00 AM - 10:00 AM	454	438	892	9:00 PM - 10:00 PM	353	410	763
10:00 AM - 11:00 AM	404	398	802	10:00 PM - 11:00 PM	250	227	477
11:00 AM - 12:00 PM	463	560	1023	11:00 PM - 12:00 AM	157	138	295
Total	**2,910**	**3,226**	**6,136**	**Total**	**6,506**	**6,296**	**12,802**

24-Hour EB Volume 9,416 ***24-Hour WB Volume 9,522***

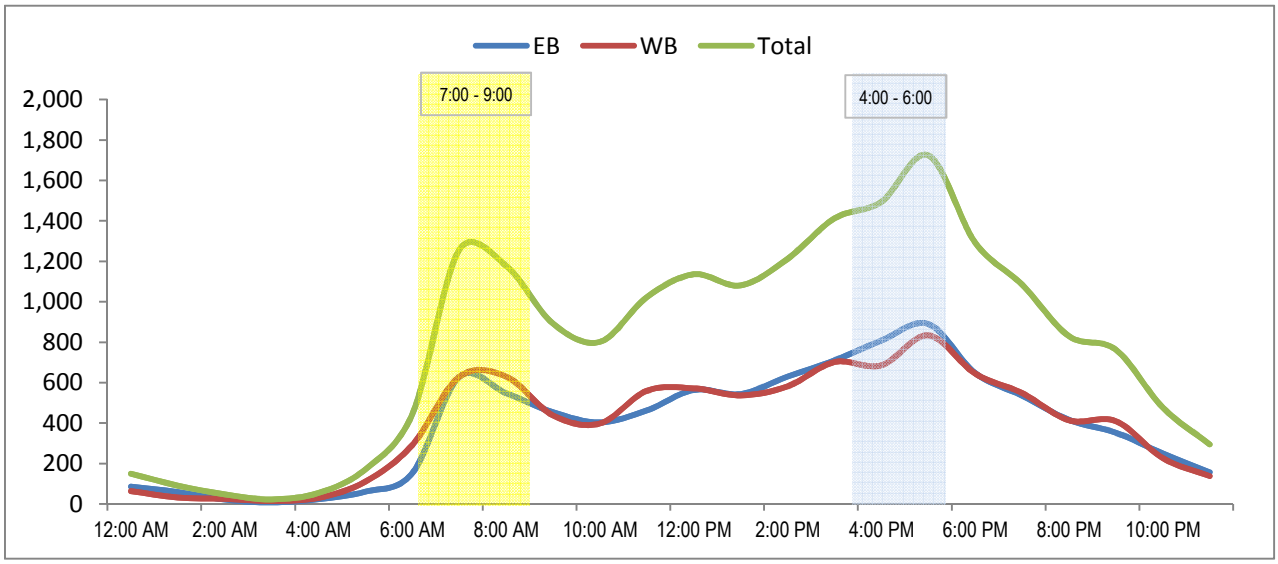

24 Hour Segment Count

Accurate Video Counts Inc
info@accuratevideocounts.com
(619) 987-5136

Location: Linda Vista Road btw Alcala Parkway to Via Las Cumbres

Orientation: *East-West*

Date of Count: *Wednesday, May 07, 2014*

Analysts: *DASH*

Weather: *Sunny*

AVC Proj. No: *14-0199*

24 Hour Segment Volume ***17,401***

Time	Hourly Volume EB	Hourly Volume WB	Hourly Volume Total	Time	Hourly Volume EB	Hourly Volume WB	Hourly Volume Total
12:00 AM - 1:00 AM	84	53	137	12:00 PM - 1:00 PM	511	538	1,049
1:00 AM - 2:00 AM	48	21	69	1:00 PM - 2:00 PM	507	531	1,038
2:00 AM - 3:00 AM	25	19	44	2:00 PM - 3:00 PM	547	545	1,092
3:00 AM - 4:00 AM	8	13	21	3:00 PM - 4:00 PM	669	648	1,317
4:00 AM - 5:00 AM	17	31	48	4:00 PM - 5:00 PM	844	593	1,437
5:00 AM - 6:00 AM	49	108	157	5:00 PM - 6:00 PM	931	743	1,674
6:00 AM - 7:00 AM	123	297	420	6:00 PM - 7:00 PM	547	533	1,080
7:00 AM - 8:00 AM	471	782	1,253	7:00 PM - 8:00 PM	488	465	953
8:00 AM - 9:00 AM	326	809	1,135	8:00 PM - 9:00 PM	432	312	744
9:00 AM - 10:00 AM	321	479	800	9:00 PM - 10:00 PM	337	261	598
10:00 AM - 11:00 AM	299	411	710	10:00 PM - 11:00 PM	266	197	463
11:00 AM - 12:00 PM	420	500	920	11:00 PM - 12:00 AM	145	97	242
Total	**2,191**	**3,523**	**5,714**	**Total**	**6,224**	**5,463**	**11,687**

24-Hour EB Volume 8,415 ***24-Hour WB Volume 8,986***

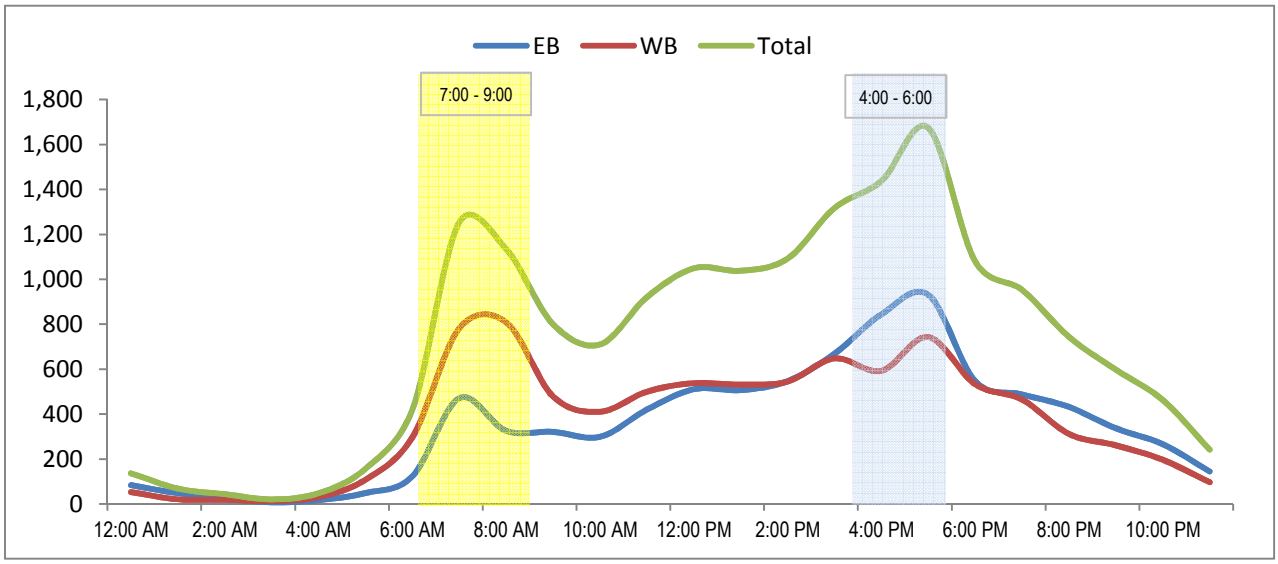

24 Hour Segment Count

Accurate Video Counts Inc
info@accuratevideocounts.com
(619) 987-5136

Location: Linda Vista Road btw Via Las Cumbres to Kramer Street

Orientation: *East-West*

Date of Count: *Wednesday, May 07, 2014*

Analysts: *DASH*

Weather: *Sunny*

AVC Proj. No: *14-0199*

24 Hour Segment Volume ***14,381***

Time	Hourly Volume EB	Hourly Volume WB	Hourly Volume Total	Time	Hourly Volume EB	Hourly Volume WB	Hourly Volume Total
12:00 AM - 1:00 AM	74	30	104	12:00 PM - 1:00 PM	452	459	911
1:00 AM - 2:00 AM	27	13	40	1:00 PM - 2:00 PM	447	469	916
2:00 AM - 3:00 AM	25	9	34	2:00 PM - 3:00 PM	498	423	921
3:00 AM - 4:00 AM	9	13	22	3:00 PM - 4:00 PM	589	519	1,108
4:00 AM - 5:00 AM	15	36	51	4:00 PM - 5:00 PM	780	488	1,268
5:00 AM - 6:00 AM	49	110	159	5:00 PM - 6:00 PM	759	629	1,388
6:00 AM - 7:00 AM	100	282	382	6:00 PM - 7:00 PM	456	470	926
7:00 AM - 8:00 AM	363	711	1,074	7:00 PM - 8:00 PM	402	283	685
8:00 AM - 9:00 AM	303	590	893	8:00 PM - 9:00 PM	324	197	521
9:00 AM - 10:00 AM	308	380	688	9:00 PM - 10:00 PM	260	164	424
10:00 AM - 11:00 AM	302	330	632	10:00 PM - 11:00 PM	187	127	314
11:00 AM - 12:00 PM	377	387	764	11:00 PM - 12:00 AM	100	56	156
Total	**1,952**	**2,891**	**4,843**	**Total**	**5,254**	**4,284**	**9,538**

24-Hour EB Volume 7,206 ***24-Hour WB Volume 7,175***

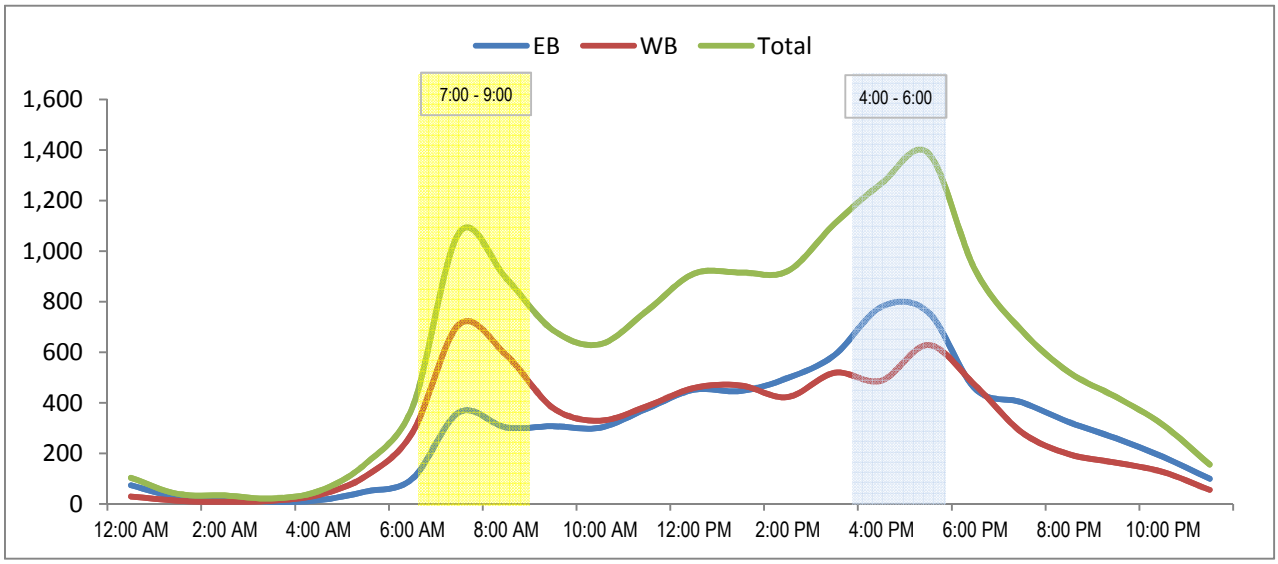

24 Hour Segment Count

Accurate Video Counts Inc
info@accuratevideocounts.com
(619) 987-5136

Location: Linda Vista Road btw Kramer Street to Comstock Street

Orientation: *North-South*

Date of Count: *Wednesday, May 07, 2014*

Analysts: *DASH*

Weather: *Sunny*

AVC Proj. No: *14-0199*

24 Hour Segment Volume ***15,480***

Time	Hourly Volume NB	SB	Total	Time	Hourly Volume NB	SB	Total
12:00 AM - 1:00 AM	39	45	84	12:00 PM - 1:00 PM	507	489	996
1:00 AM - 2:00 AM	33	15	48	1:00 PM - 2:00 PM	470	487	957
2:00 AM - 3:00 AM	19	13	32	2:00 PM - 3:00 PM	504	494	998
3:00 AM - 4:00 AM	13	16	29	3:00 PM - 4:00 PM	559	603	1,162
4:00 AM - 5:00 AM	35	28	63	4:00 PM - 5:00 PM	657	601	1,258
5:00 AM - 6:00 AM	109	70	179	5:00 PM - 6:00 PM	711	734	1,445
6:00 AM - 7:00 AM	226	230	456	6:00 PM - 7:00 PM	473	561	1,034
7:00 AM - 8:00 AM	528	572	1,100	7:00 PM - 8:00 PM	397	377	774
8:00 AM - 9:00 AM	527	535	1,062	8:00 PM - 9:00 PM	303	265	568
9:00 AM - 10:00 AM	388	367	755	9:00 PM - 10:00 PM	227	238	465
10:00 AM - 11:00 AM	330	346	676	10:00 PM - 11:00 PM	145	185	330
11:00 AM - 12:00 PM	381	464	845	11:00 PM - 12:00 AM	87	77	164
Total	**2,628**	**2,701**	**5,329**	**Total**	**5,040**	**5,111**	**10,151**

24-Hour NB Volume 7,668 ***24-Hour SB Volume 7,812***

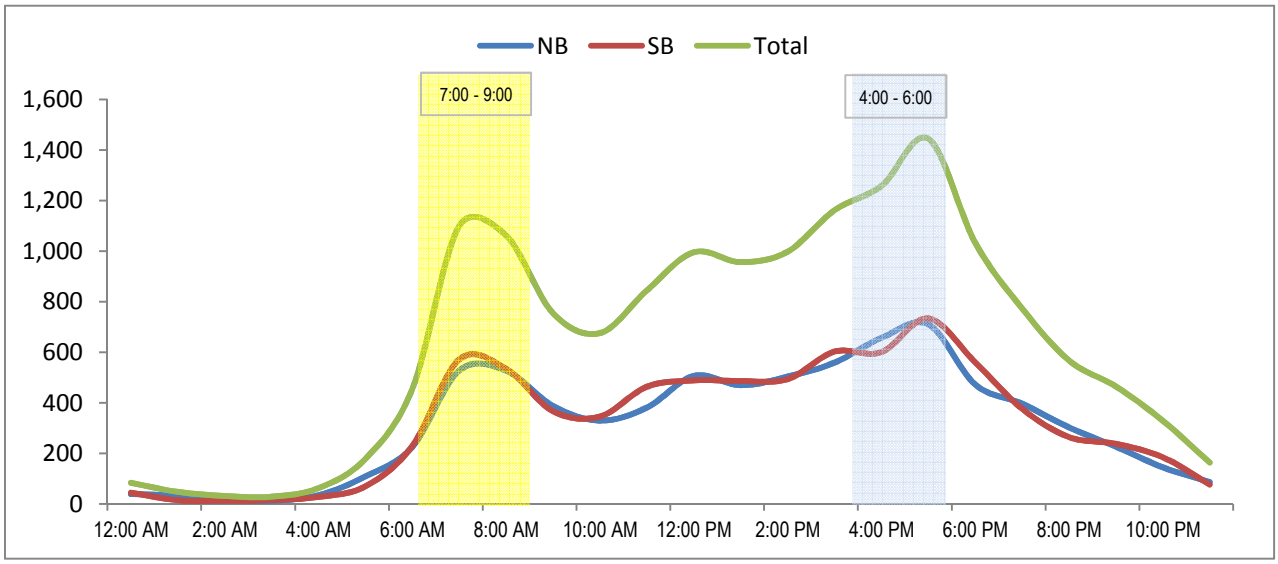

24 Hour Segment Count

Accurate Video Counts Inc
info@accuratevideocounts.com
(619) 987-5136

Location: Linda Vista Road btw Comstock Street to Ulric Street

Orientation: *North-South*

Date of Count: *Wednesday, May 07, 2014*

Analysts: *DASH*

Weather: *Sunny*

AVC Proj. No: *14-0199*

24 Hour Segment Volume ***16,548***

Time	Hourly Volume NB	Hourly Volume SB	Hourly Volume Total	Time	Hourly Volume NB	Hourly Volume SB	Hourly Volume Total
12:00 AM - 1:00 AM	42	61	103	12:00 PM - 1:00 PM	547	548	1,095
1:00 AM - 2:00 AM	38	22	60	1:00 PM - 2:00 PM	540	538	1,078
2:00 AM - 3:00 AM	20	18	38	2:00 PM - 3:00 PM	517	572	1,089
3:00 AM - 4:00 AM	15	9	24	3:00 PM - 4:00 PM	576	627	1,203
4:00 AM - 5:00 AM	44	32	76	4:00 PM - 5:00 PM	670	672	1,342
5:00 AM - 6:00 AM	147	72	219	5:00 PM - 6:00 PM	682	794	1,476
6:00 AM - 7:00 AM	296	224	520	6:00 PM - 7:00 PM	469	579	1,048
7:00 AM - 8:00 AM	572	563	1,135	7:00 PM - 8:00 PM	417	399	816
8:00 AM - 9:00 AM	533	501	1,034	8:00 PM - 9:00 PM	294	274	568
9:00 AM - 10:00 AM	455	432	887	9:00 PM - 10:00 PM	229	263	492
10:00 AM - 11:00 AM	418	409	827	10:00 PM - 11:00 PM	146	188	334
11:00 AM - 12:00 PM	412	498	910	11:00 PM - 12:00 AM	81	93	174
Total	**2,992**	**2,841**	**5,833**	**Total**	**5,168**	**5,547**	**10,715**

24-Hour NB Volume 8,160 ***24-Hour SB Volume 8,388***

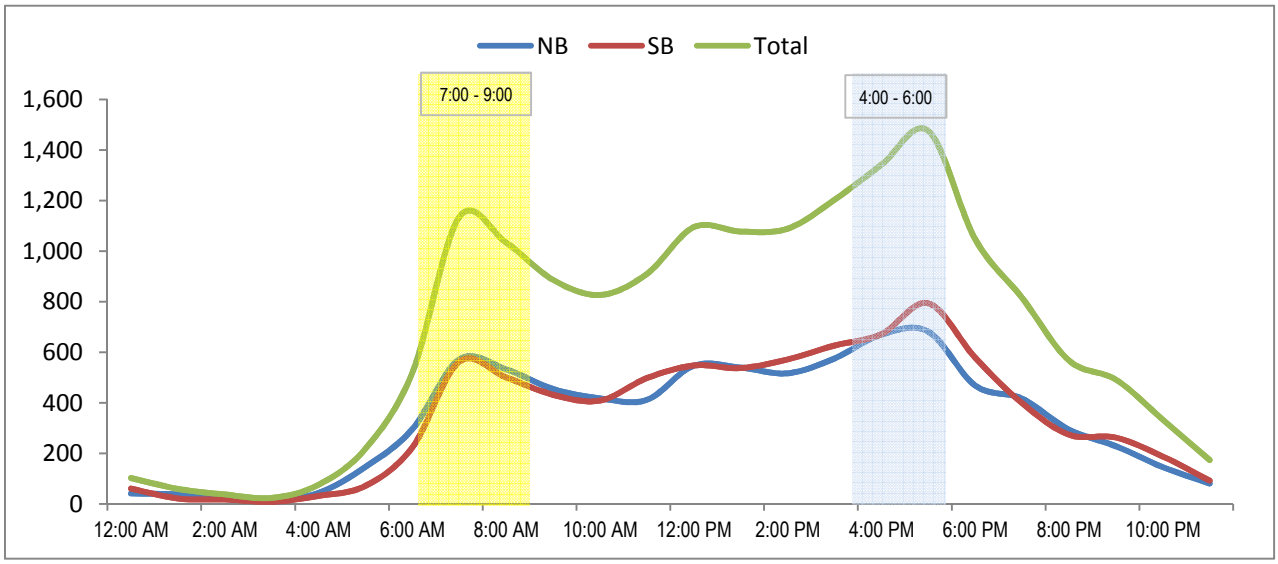

24 Hour Segment Count

Accurate Video Counts Inc
info@accuratevideocounts.com
(619) 987-5136

Location: Linda Vista Road btw Ulric Street to Genesee Avenue

Orientation: *North-South*

Date of Count: *Wednesday, May 07, 2014*

Analysts: *DASH*

Weather: *Sunny*

AVC Proj. No: *14-0199*

24 Hour Segment Volume ***23,429***

Time	Hourly Volume NB	Hourly Volume SB	Hourly Volume Total	Time	Hourly Volume NB	Hourly Volume SB	Hourly Volume Total
12:00 AM - 1:00 AM	54	84	138	12:00 PM - 1:00 PM	772	776	1,548
1:00 AM - 2:00 AM	43	33	76	1:00 PM - 2:00 PM	726	739	1,465
2:00 AM - 3:00 AM	25	33	58	2:00 PM - 3:00 PM	707	811	1,518
3:00 AM - 4:00 AM	25	11	36	3:00 PM - 4:00 PM	842	933	1,775
4:00 AM - 5:00 AM	68	36	104	4:00 PM - 5:00 PM	871	988	1,859
5:00 AM - 6:00 AM	228	100	328	5:00 PM - 6:00 PM	939	1,240	2,179
6:00 AM - 7:00 AM	470	268	738	6:00 PM - 7:00 PM	698	898	1,596
7:00 AM - 8:00 AM	805	622	1,427	7:00 PM - 8:00 PM	553	598	1,151
8:00 AM - 9:00 AM	810	682	1,492	8:00 PM - 9:00 PM	416	422	838
9:00 AM - 10:00 AM	649	595	1,244	9:00 PM - 10:00 PM	302	372	674
10:00 AM - 11:00 AM	601	566	1,167	10:00 PM - 11:00 PM	180	281	461
11:00 AM - 12:00 PM	658	656	1314	11:00 PM - 12:00 AM	99	144	243
Total	**4,436**	**3,686**	**8,122**	**Total**	**7,105**	**8,202**	**15,307**

24-Hour NB Volume 11,541 ***24-Hour SB Volume 11,888***

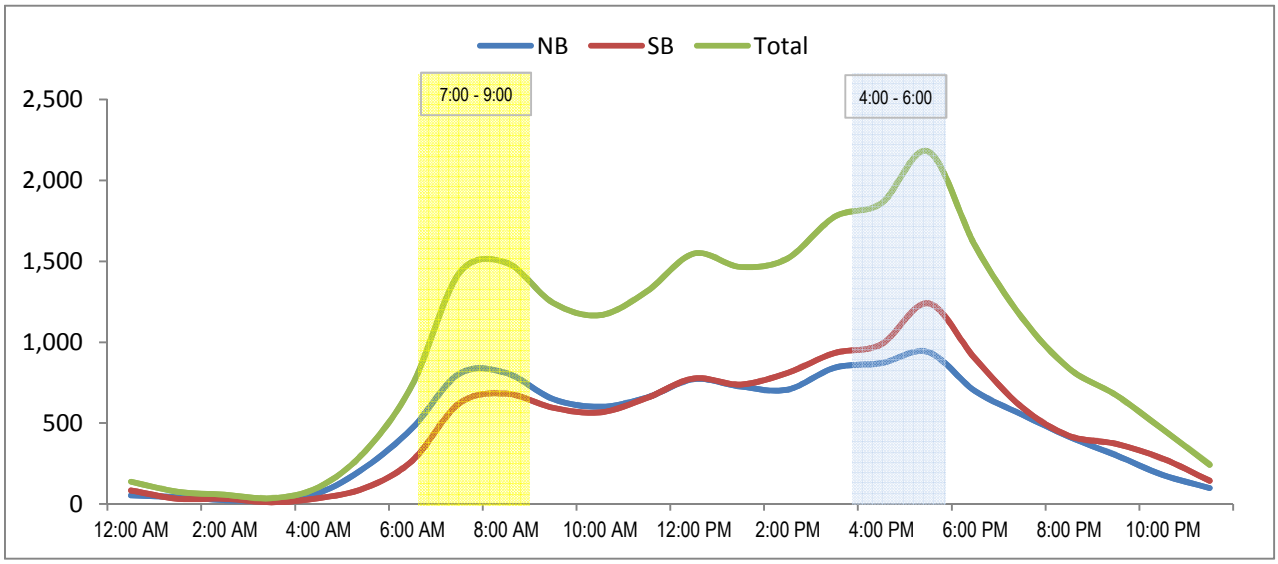

MetroCount Traffic Executive
Event Counts

2105 -- English (ENU)

Datasets:

Site:	**32.FRIARS RD (NAPA ST - COLUSSA ST) EASTBOUND**
Input A:	2 - East bound. - Lane= 0, Added to totals. (/2.000)
Input B:	4 - West bound. - Lane= 0, Excluded from totals.
Survey Duration:	11:23 Monday, April 08, 2013 => 10:28 Monday, April 15, 2013
File:	93215Apr2013.EC0 (Base)
Data type:	Axle sensors - Separate (Count)

Profile:

Filter time: **0:00 Tuesday, April 09, 2013 => 0:00 Sunday, April 14, 2013**

* Tuesday, April 09, 2013=9821, 15 minute drops

0000	0100	0200	0300	0400	0500	0600	0700	0800	0900	1000	1100	1200	1300	1400	1500	1600	1700	1800	1900	2000	2100	2200	2300	
32	**16**	**11**	**4**	**11**	**69**	**274**	**555**	**529**	**535**	**520**	**523**	**583**	**514**	**557**	**599**	**944**	**1159**	**820**	**666**	**371**	**298**	**158**	**76**	
12	3	5	0	3	6	42	84	**122**	174	110	117	150	128	134	139	218	**308**	228	185	116	76	53	32	11
9	3	4	2	2	9	64	110	**122**	120	134	122	158	113	145	128	221	**288**	195	191	95	89	41	13	15
5	3	2	1	1	21	67	**175**	118	121	131	142	137	126	132	154	227	**285**	212	155	87	64	30	15	9
6	7	0	1	5	33	102	**187**	168	121	146	142	139	148	147	179	279	**279**	186	136	74	70	34	16	10

AM Peak 0730 - 0830 (605), AM PHF=0.81 PM Peak 1700 - 1800 (1159), PM PHF=0.94

* Wednesday, April 10, 2013=10025, 15 minute drops

0000	0100	0200	0300	0400	0500	0600	0700	0800	0900	1000	1100	1200	1300	1400	1500	1600	1700	1800	1900	2000	2100	2200	2300	
45	**20**	**13**	**8**	**9**	**71**	**275**	**537**	**486**	**532**	**522**	**595**	**579**	**535**	**577**	**683**	**954**	**1169**	**857**	**632**	**418**	**258**	**164**	**91**	
11	3	3	0	0	3	36	96	127	113	140	**159**	145	140	139	155	216	**306**	227	174	133	72	45	33	7
15	5	5	4	2	13	65	101	109	129	121	**135**	119	127	147	158	249	**306**	202	155	104	66	48	25	10
9	6	3	1	2	14	77	170	124	140	126	**160**	152	127	159	154	230	**279**	198	160	105	60	41	15	7
10	6	2	3	5	41	97	170	127	151	135	**142**	164	141	132	216	260	**279**	231	143	77	60	30	18	8

AM Peak 1100 - 1200 (595), AM PHF=0.93 PM Peak 1700 - 1800 (1169), PM PHF=0.96

* Thursday, April 11, 2013=10086, 15 minute drops

0000	0100	0200	0300	0400	0500	0600	0700	0800	0900	1000	1100	1200	1300	1400	1500	1600	1700	1800	1900	2000	2100	2200	2300	
32	**24**	**11**	**8**	**22**	**63**	**250**	**507**	**524**	**543**	**552**	**591**	**626**	**569**	**602**	**664**	**955**	**1169**	**860**	**655**	**370**	**260**	**154**	**80**	
7	4	5	3	6	8	34	93	117	153	127	150	**141**	137	152	155	219	**334**	207	191	125	71	51	26	14
10	8	1	4	5	14	46	121	122	121	136	136	**168**	139	130	150	232	**294**	234	167	89	71	28	25	17
7	8	5	1	6	17	71	142	120	116	164	153	**155**	160	147	167	257	**286**	223	165	79	66	52	15	14
8	4	0	0	5	24	100	152	166	153	126	**153**	162	134	174	193	248	**256**	197	132	78	52	23	14	11

AM Peak 1145 - 1245 (616), AM PHF=0.92 PM Peak 1700 - 1800 (1169), PM PHF=0.87

* Friday, April 12, 2013=10133, 15 minute drops

0000	0100	0200	0300	0400	0500	0600	0700	0800	0900	1000	1100	1200	1300	1400	1500	1600	1700	1800	1900	2000	2100	2200	2300	
56	**35**	**24**	**19**	**9**	**63**	**265**	**509**	**441**	**498**	**577**	**637**	**629**	**650**	**633**	**800**	**1069**	**975**	**779**	**612**	**344**	**236**	**180**	**98**	
14	11	11	4	3	10	39	95	102	130	162	**168**	135	187	152	201	254	**247**	219	159	107	71	49	26	28
17	12	8	6	0	7	65	100	111	105	118	**147**	177	168	154	184	221	**279**	200	164	77	71	54	21	22
14	5	3	7	2	15	66	147	94	112	145	**167**	159	128	155	192	**271**	260	173	146	99	41	44	29	21
11	7	2	2	4	31	95	168	136	151	152	**155**	159	167	173	223	**324**	190	188	144	61	54	33	22	24

AM Peak 1100 - 1200 (637), AM PHF=0.95 PM Peak 1630 - 1730 (1120), PM PHF=0.87

* Saturday, April 13, 2013=8216, 15 minute drops

0000	0100	0200	0300	0400	0500	0600	0700	0800	0900	1000	1100	1200	1300	1400	1500	1600	1700	1800	1900	2000	2100	2200	2300	
95	**60**	**39**	**13**	**11**	**19**	**80**	**180**	**333**	**475**	**626**	**672**	**637**	**653**	**650**	**612**	**635**	**639**	**540**	**430**	**346**	**217**	**160**	**98**	
28	20	13	5	2	4	9	40	56	81	148	**155**	131	161	161	174	168	158	143	129	92	63	52	27	-
22	19	9	6	2	1	16	42	73	126	155	**184**	175	170	158	130	163	168	128	113	101	44	41	28	-
21	9	8	1	4	6	21	33	80	111	168	**170**	166	171	174	134	151	157	148	77	91	43	30	21	-
24	12	9	1	3	8	34	65	125	158	156	**163**	166	151	158	174	153	157	121	113	63	68	38	22	-

AM Peak 1100 - 1200 (672), AM PHF=0.91

MetroCount Traffic Executive
Event Counts

2106 -- English (ENU)

Datasets:

Site:	**32.FRIARS RD (NAPA ST - COLUSSA ST) WESTBOUND**
Input A:	2 - East bound. - Lane= 0, Excluded from totals.
Input B:	4 - West bound. - Lane= 0, Added to totals. (/2.000)
Survey Duration:	11:23 Monday, April 08, 2013 => 10:28 Monday, April 15, 2013
File:	93215Apr2013.EC0 (Base)
Data type:	Axle sensors - Separate (Count)

Profile:

Filter time: **0:00 Tuesday, April 09, 2013 => 0:00 Sunday, April 14, 2013**

* Tuesday, April 09, 2013=9163, 15 minute drops

0000	0100	0200	0300	0400	0500	0600	0700	0800	0900	1000	1100	1200	1300	1400	1500	1600	1700	1800	1900	2000	2100	2200	2300	
23	**10**	**10**	**12**	**45**	**151**	**332**	**684**	**728**	**599**	**500**	**506**	**572**	**564**	**542**	**582**	**616**	**761**	**649**	**485**	**326**	**269**	**144**	**58**	
7	3	2	2	5	28	53	113	**177**	161	123	130	155	147	129	154	139	**200**	184	128	79	75	54	23	9
6	1	2	2	10	40	71	143	**174**	157	129	113	159	154	119	127	167	**184**	146	138	100	73	29	12	8
6	4	2	3	14	37	88	194	**196**	150	116	139	131	131	140	140	150	**195**	164	116	74	61	39	10	12
4	2	4	5	16	46	121	**235**	182	132	132	124	128	132	154	162	161	**183**	156	103	74	61	22	13	3

AM Peak 0745 - 0845 (780), AM PHF=0.83 PM Peak 1700 - 1800 (761), PM PHF=0.95

* Wednesday, April 10, 2013=9525, 15 minute drops

0000	0100	0200	0300	0400	0500	0600	0700	0800	0900	1000	1100	1200	1300	1400	1500	1600	1700	1800	1900	2000	2100	2200	2300	
32	**9**	**11**	**19**	**46**	**161**	**353**	**824**	**838**	**576**	**485**	**565**	**544**	**542**	**555**	**611**	**662**	**708**	**675**	**487**	**348**	**278**	**135**	**66**	
9	3	4	3	4	22	55	127	**229**	142	140	146	151	137	137	164	161	175	**188**	147	99	92	49	29	7
8	1	0	4	12	43	73	168	**213**	117	122	119	139	148	113	132	170	**190**	171	120	86	73	33	16	11
12	4	2	3	12	38	111	**248**	204	168	111	155	126	131	142	163	166	**191**	153	113	88	48	24	6	7
3	1	5	9	18	58	115	**282**	192	149	113	146	129	127	164	152	166	**153**	163	108	75	65	29	15	2

AM Peak 0730 - 0830 (971), AM PHF=0.86 PM Peak 1715 - 1815 (721), PM PHF=0.95

* Thursday, April 11, 2013=9207, 15 minute drops

0000	0100	0200	0300	0400	0500	0600	0700	0800	0900	1000	1100	1200	1300	1400	1500	1600	1700	1800	1900	2000	2100	2200	2300	
27	**25**	**8**	**10**	**57**	**149**	**322**	**712**	**727**	**494**	**504**	**537**	**605**	**564**	**542**	**574**	**626**	**770**	**655**	**500**	**339**	**251**	**138**	**76**	
7	8	2	2	10	20	50	136	**174**	128	139	127	164	144	125	123	161	**193**	166	152	97	81	41	22	18
11	5	1	2	8	45	68	138	**177**	124	115	132	147	134	134	144	139	**182**	168	120	100	68	41	27	6
7	9	3	1	15	36	92	197	**211**	117	139	139	141	139	149	154	158	**227**	162	116	72	52	27	17	11
2	3	2	5	24	49	112	**242**	167	125	112	139	153	148	135	154	169	**169**	159	113	70	50	29	10	7

AM Peak 0745 - 0845 (803), AM PHF=0.83 PM Peak 1700 - 1800 (770), PM PHF=0.85

* Friday, April 12, 2013=9414, 15 minute drops

0000	0100	0200	0300	0400	0500	0600	0700	0800	0900	1000	1100	1200	1300	1400	1500	1600	1700	1800	1900	2000	2100	2200	2300	
42	**15**	**4**	**13**	**45**	**151**	**338**	**647**	**748**	**501**	**541**	**580**	**601**	**604**	**601**	**656**	**733**	**703**	**588**	**452**	**321**	**270**	**170**	**94**	
18	5	0	3	9	25	53	108	**201**	124	145	128	167	146	139	155	190	**170**	178	142	87	80	56	31	17
6	1	0	3	12	34	72	135	**191**	128	124	151	139	174	141	168	150	**181**	144	99	96	73	53	20	14
11	2	1	1	9	43	83	**193**	165	128	133	156	150	133	161	172	178	**193**	130	111	70	64	38	23	19
7	7	3	6	15	49	131	**212**	192	122	139	145	146	153	161	162	**215**	159	137	101	68	54	23	20	13

AM Peak 0730 - 0830 (795), AM PHF=0.94 PM Peak 1645 - 1745 (759), PM PHF=0.88

* Saturday, April 13, 2013=7885, 15 minute drops

0000	0100	0200	0300	0400	0500	0600	0700	0800	0900	1000	1100	1200	1300	1400	1500	1600	1700	1800	1900	2000	2100	2200	2300	
62	**30**	**22**	**14**	**23**	**52**	**117**	**249**	**426**	**546**	**555**	**622**	**645**	**571**	**578**	**600**	**587**	**563**	**443**	**366**	**311**	**258**	**148**	**103**	
17	12	2	3	5	10	16	62	87	131	137	150	**160**	155	154	146	140	151	125	100	87	68	42	24	-
14	6	2	5	4	11	28	52	94	135	119	137	**153**	154	147	136	136	136	123	102	73	72	42	38	-
19	4	10	1	7	13	39	63	105	140	139	**184**	171	139	132	161	144	147	107	79	73	68	30	25	-
13	8	8	5	7	19	35	72	140	141	161	**151**	162	123	145	158	168	130	89	86	78	51	34	16	-

AM Peak 1130 - 1230 (648), AM PHF=0.88

24 Hour Segment Count

Accurate Video Counts Inc
info@accuratevideocounts.com
(619) 987-5136

Location: Friars Road btw Colusa Street to Via Las Cumbres

Orientation: *East-West*

Date of Count: *Thursday, May 08, 2014*

Analysts: *DASH*

Weather: *Sunny*

AVC Proj. No: *14-0199*

24 Hour Segment Volume ***18,646***

Time	Hourly Volume EB	Hourly Volume WB	Hourly Volume Total	Time	Hourly Volume EB	Hourly Volume WB	Hourly Volume Total
12:00 AM - 1:00 AM	33	35	68	12:00 PM - 1:00 PM	605	545	1,150
1:00 AM - 2:00 AM	26	21	47	1:00 PM - 2:00 PM	555	545	1,100
2:00 AM - 3:00 AM	7	14	21	2:00 PM - 3:00 PM	595	566	1,161
3:00 AM - 4:00 AM	12	10	22	3:00 PM - 4:00 PM	700	573	1,273
4:00 AM - 5:00 AM	20	51	71	4:00 PM - 5:00 PM	1,074	704	1,778
5:00 AM - 6:00 AM	79	120	199	5:00 PM - 6:00 PM	1,208	779	1,987
6:00 AM - 7:00 AM	212	270	482	6:00 PM - 7:00 PM	778	608	1,386
7:00 AM - 8:00 AM	571	701	1,272	7:00 PM - 8:00 PM	539	434	973
8:00 AM - 9:00 AM	441	684	1,125	8:00 PM - 9:00 PM	384	395	779
9:00 AM - 10:00 AM	471	369	840	9:00 PM - 10:00 PM	261	290	551
10:00 AM - 11:00 AM	487	411	898	10:00 PM - 11:00 PM	146	162	308
11:00 AM - 12:00 PM	539	462	1001	11:00 PM - 12:00 AM	78	76	154
Total	**2,898**	**3,148**	**6,046**	**Total**	**6,923**	**5,677**	**12,600**

24-Hour EB Volume 9,821 ***24-Hour WB Volume 8,825***

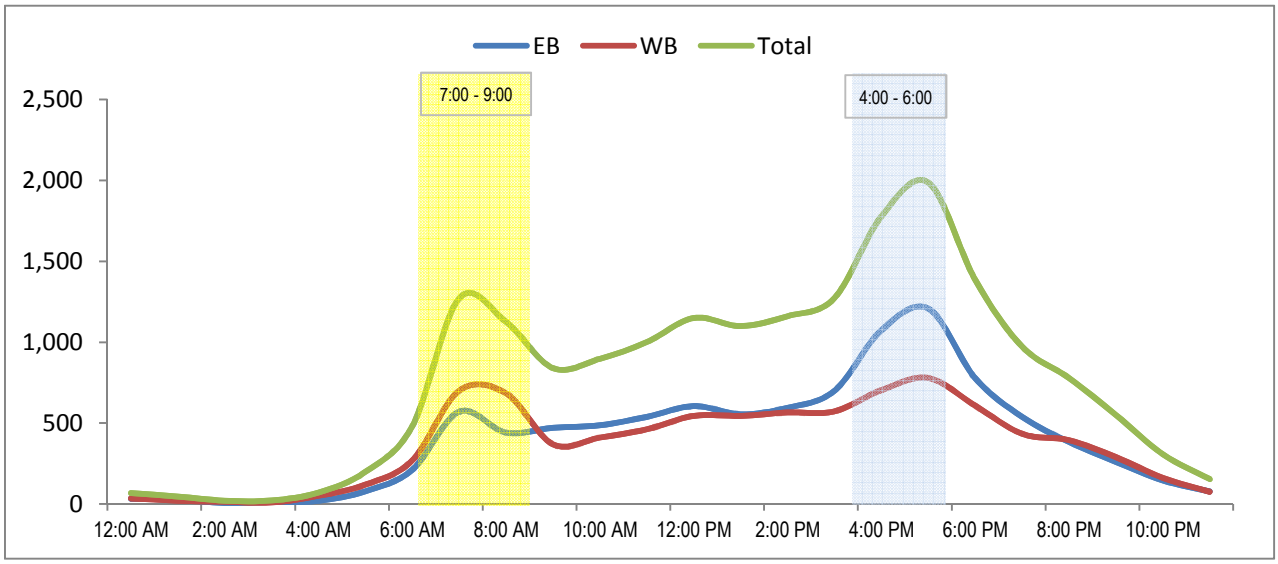

24 Hour Segment Count

Accurate Video Counts Inc
info@accuratevideocounts.com
(619) 987-5136

Location: 1 Friars Road, West of Fashion Valley Road

Orientation: *East-West*

Date of Count: *Tuesday, September 09, 2014*

Analysts: *DASH*

Weather: *Sunny*

AVC Proj. No: *14-0253*

24 Hour Segment Volume ***24,046***

Time	Hourly Volume EB	Hourly Volume WB	Hourly Volume Total	Time	Hourly Volume EB	Hourly Volume WB	Hourly Volume Total
12:00 AM - 1:00 AM	59	66	125	12:00 PM - 1:00 PM	770	650	1,420
1:00 AM - 2:00 AM	34	33	67	1:00 PM - 2:00 PM	692	717	1,409
2:00 AM - 3:00 AM	22	27	49	2:00 PM - 3:00 PM	714	722	1,436
3:00 AM - 4:00 AM	32	27	59	3:00 PM - 4:00 PM	865	763	1,628
4:00 AM - 5:00 AM	37	44	81	4:00 PM - 5:00 PM	1,262	817	2,079
5:00 AM - 6:00 AM	139	120	259	5:00 PM - 6:00 PM	1,378	959	2,337
6:00 AM - 7:00 AM	346	331	677	6:00 PM - 7:00 PM	882	836	1,718
7:00 AM - 8:00 AM	707	987	1,694	7:00 PM - 8:00 PM	719	672	1,391
8:00 AM - 9:00 AM	689	944	1,633	8:00 PM - 9:00 PM	491	513	1,004
9:00 AM - 10:00 AM	624	538	1,162	9:00 PM - 10:00 PM	338	433	771
10:00 AM - 11:00 AM	677	484	1,161	10:00 PM - 11:00 PM	187	244	431
11:00 AM - 12:00 PM	621	589	1210	11:00 PM - 12:00 AM	118	127	245
Total	**3,987**	**4,190**	**8,177**	**Total**	**8,416**	**7,453**	**15,869**

24-Hour EB Volume 12,403 ***24-Hour WB Volume 11,643***

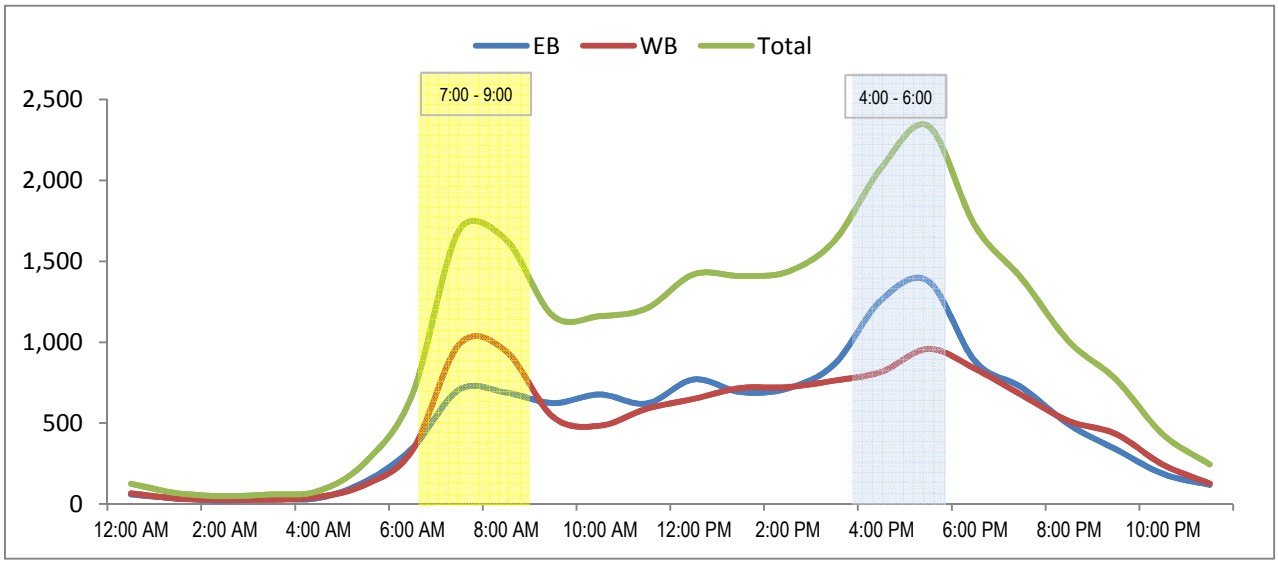

24 Hour Segment Count

Accurate Video Counts Inc
info@accuratevideocounts.com
(619) 987-5136

Location: 2 Friars Road, Fashion Valley Road to Via De La Moda

Orientation: *East-West*

Date of Count: *Tuesday, September 09, 2014*

Analysts: *DASH*

Weather: *Sunny*

AVC Proj. No: *14-0253*

24 Hour Segment Volume ***25,247***

Time	Hourly Volume			Time	Hourly Volume		
	EB	WB	Total		EB	WB	Total
12:00 AM - 1:00 AM	73	62	135	12:00 PM - 1:00 PM	889	678	1,567
1:00 AM - 2:00 AM	31	34	65	1:00 PM - 2:00 PM	825	665	1,490
2:00 AM - 3:00 AM	22	30	52	2:00 PM - 3:00 PM	859	700	1,559
3:00 AM - 4:00 AM	33	22	55	3:00 PM - 4:00 PM	1,015	757	1,772
4:00 AM - 5:00 AM	38	57	95	4:00 PM - 5:00 PM	1,386	770	2,156
5:00 AM - 6:00 AM	156	158	314	5:00 PM - 6:00 PM	1,493	898	2,391
6:00 AM - 7:00 AM	338	373	711	6:00 PM - 7:00 PM	1,036	728	1,764
7:00 AM - 8:00 AM	690	1,023	1,713	7:00 PM - 8:00 PM	826	624	1,450
8:00 AM - 9:00 AM	657	991	1,648	8:00 PM - 9:00 PM	596	449	1,045
9:00 AM - 10:00 AM	640	596	1,236	9:00 PM - 10:00 PM	422	399	821
10:00 AM - 11:00 AM	695	505	1,200	10:00 PM - 11:00 PM	223	232	455
11:00 AM - 12:00 PM	700	600	1300	11:00 PM - 12:00 AM	140	113	253
Total	**4,073**	**4,451**	**8,524**	**Total**	**9,710**	**7,013**	**16,723**

24-Hour EB Volume 13,783 ***24-Hour WB Volume 11,464***

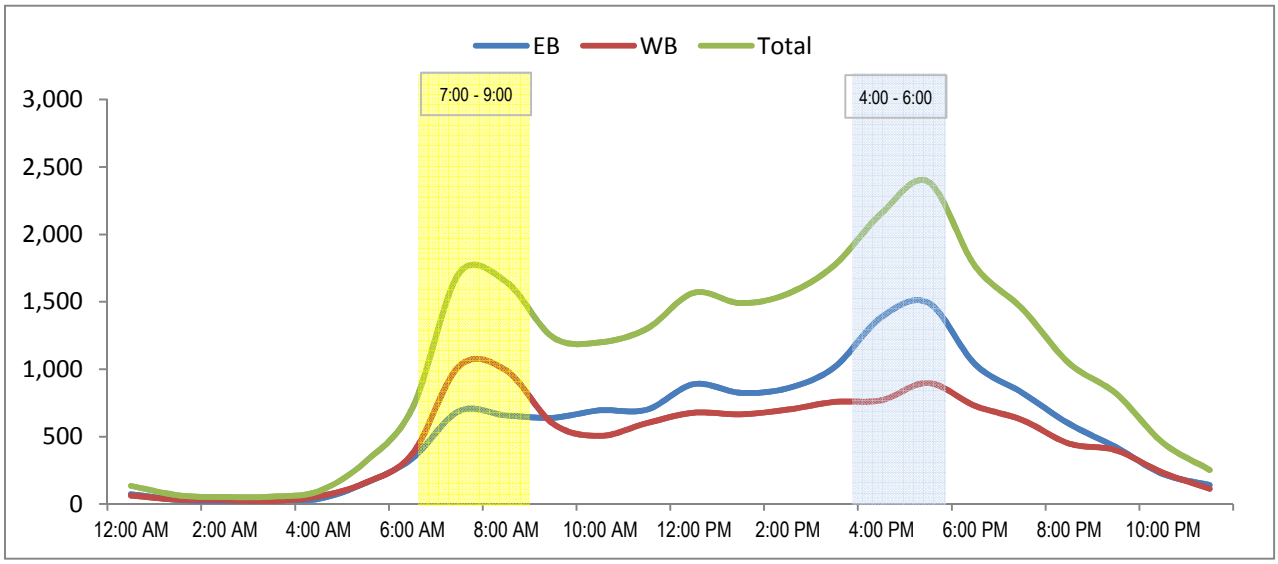

24 Hour Segment Count

Accurate Video Counts Inc
info@accuratevideocounts.com
(619) 987-5136

Location: 3 Friars Road, Via De La Moda to Avenida De Las Tiendas

Orientation: *East-West*

Date of Count: *Tuesday, September 09, 2014*

Analysts: *DASH*

Weather: *Sunny*

AVC Proj. No: *14-0253*

24 Hour Segment Volume 30,063

Time	Hourly Volume EB	Hourly Volume WB	Hourly Volume Total
12:00 AM - 1:00 AM	80	63	143
1:00 AM - 2:00 AM	32	36	68
2:00 AM - 3:00 AM	24	33	57
3:00 AM - 4:00 AM	33	26	59
4:00 AM - 5:00 AM	37	62	99
5:00 AM - 6:00 AM	164	190	354
6:00 AM - 7:00 AM	352	410	762
7:00 AM - 8:00 AM	699	1,067	1,766
8:00 AM - 9:00 AM	656	1,075	1,731
9:00 AM - 10:00 AM	620	740	1,360
10:00 AM - 11:00 AM	747	751	1,498
11:00 AM - 12:00 PM	820	898	1718
Total	**4,264**	**5,351**	**9,615**

Time	Hourly Volume EB	Hourly Volume WB	Hourly Volume Total
12:00 PM - 1:00 PM	1,095	940	2,035
1:00 PM - 2:00 PM	1,117	872	1,989
2:00 PM - 3:00 PM	1,123	886	2,009
3:00 PM - 4:00 PM	1,250	898	2,148
4:00 PM - 5:00 PM	1,544	957	2,501
5:00 PM - 6:00 PM	1,676	1,039	2,715
6:00 PM - 7:00 PM	1,272	863	2,135
7:00 PM - 8:00 PM	1,068	743	1,811
8:00 PM - 9:00 PM	821	490	1,311
9:00 PM - 10:00 PM	635	400	1,035
10:00 PM - 11:00 PM	261	234	495
11:00 PM - 12:00 AM	147	117	264
Total	**12,009**	**8,439**	**20,448**

24-Hour	EB	Volume	16,273	24-Hour	WB	Volume	13,790

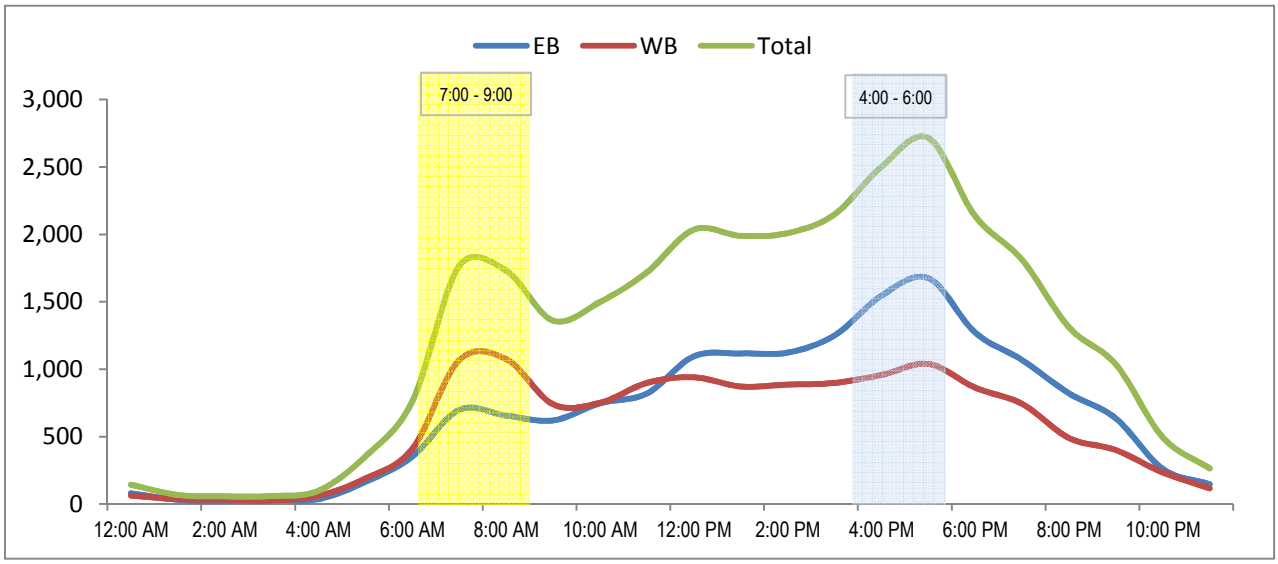

24 Hour Segment Count

Accurate Video Counts Inc
info@accuratevideocounts.com
(619) 987-5136

Location: 4 Friars Road, Avendia De Las Tiendas to Ulric Street

Orientation: *East-West*

Date of Count: *Tuesday, September 09, 2014*

Analysts: *DASH*

Weather: *Sunny*

AVC Proj. No: *14-0253*

24 Hour Segment Volume ***41,993***

Time	Hourly Volume			Time	Hourly Volume		
	EB	WB	Total		EB	WB	Total
12:00 AM - 1:00 AM	147	74	221	12:00 PM - 1:00 PM	1,497	1,595	3,092
1:00 AM - 2:00 AM	37	43	80	1:00 PM - 2:00 PM	1,686	1,363	3,049
2:00 AM - 3:00 AM	33	45	78	2:00 PM - 3:00 PM	1,700	1,368	3,068
3:00 AM - 4:00 AM	33	27	60	3:00 PM - 4:00 PM	1,779	1,300	3,079
4:00 AM - 5:00 AM	43	75	118	4:00 PM - 5:00 PM	1,970	1,410	3,380
5:00 AM - 6:00 AM	176	222	398	5:00 PM - 6:00 PM	2,114	1,493	3,607
6:00 AM - 7:00 AM	398	482	880	6:00 PM - 7:00 PM	1,766	1,337	3,103
7:00 AM - 8:00 AM	763	1,132	1,895	7:00 PM - 8:00 PM	1,575	1,131	2,706
8:00 AM - 9:00 AM	725	1,213	1,938	8:00 PM - 9:00 PM	1,388	644	2,032
9:00 AM - 10:00 AM	737	1,027	1,764	9:00 PM - 10:00 PM	1,076	476	1,552
10:00 AM - 11:00 AM	916	1,181	2,097	10:00 PM - 11:00 PM	470	270	740
11:00 AM - 12:00 PM	1,156	1,564	2720	11:00 PM - 12:00 AM	213	123	336
Total	**5,164**	**7,085**	**12,249**	**Total**	**17,234**	**12,510**	**29,744**

24-Hour EB Volume 22,398 ***24-Hour WB Volume 19,595***

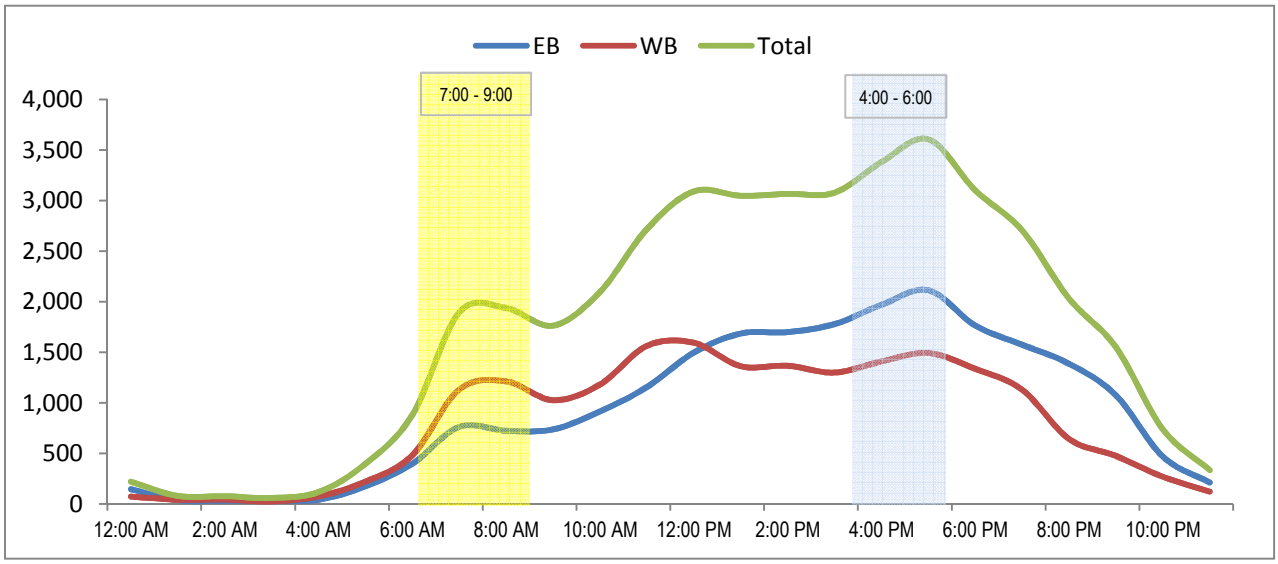

MetroCount Traffic Executive
Event Counts

2080 -- English (ENU)

Datasets:

Site:	**21.NAPA ST (LINDA VISTA ROAD - RILEY ST) NORTHBOUND**
Input A:	1 - North bound. - Lane= 0, Added to totals. (/2.000)
Input B:	3 - South bound. - Lane= 0, Excluded from totals.
Survey Duration:	12:40 Monday, April 08, 2013 => 8:57 Monday, April 15, 2013
File:	092115Apr2013.EC0 (Base)
Data type:	Axle sensors - Separate (Count)

Profile:

Filter time: **0:00 Tuesday, April 09, 2013 => 0:00 Sunday, April 14, 2013**

* Tuesday, April 09, 2013=8831, 15 minute drops

0000	0100	0200	0300	0400	0500	0600	0700	0800	0900	1000	1100	1200	1300	1400	1500	1600	1700	1800	1900	2000	2100	2200	2300	
21	**11**	**6**	**12**	**21**	**102**	**235**	**699**	**856**	**569**	**547**	**521**	**638**	**572**	**534**	**597**	**590**	**722**	**533**	**425**	**267**	**199**	**100**	**61**	
9	1	1	2	0	15	40	96	168	**203**	121	117	191	129	131	172	130	**189**	143	108	83	70	36	22	8
3	3	1	1	4	20	40	171	**166**	127	177	122	166	163	134	126	149	**178**	152	114	76	42	26	7	5
4	3	1	0	7	30	66	216	**255**	128	131	133	153	139	134	129	147	**215**	131	116	49	54	23	20	8
5	4	3	9	10	37	90	218	**268**	112	119	149	129	142	136	171	**165**	141	108	87	60	33	16	12	4

AM Peak 0815 - 0915 (891), AM PHF=0.83 PM Peak 1645 - 1745 (746), PM PHF=0.87

* Wednesday, April 10, 2013=8968, 15 minute drops

0000	0100	0200	0300	0400	0500	0600	0700	0800	0900	1000	1100	1200	1300	1400	1500	1600	1700	1800	1900	2000	2100	2200	2300	
25	**10**	**13**	**15**	**25**	**84**	**251**	**670**	**890**	**584**	**532**	**521**	**607**	**602**	**579**	**576**	**645**	**697**	**573**	**420**	**274**	**198**	**113**	**69**	
8	2	4	1	1	10	32	124	**252**	153	107	117	168	134	140	160	153	**191**	186	127	92	63	36	19	8
5	1	4	6	6	16	48	135	**209**	107	155	119	137	172	178	149	158	**181**	113	110	75	47	29	19	8
8	4	3	2	7	30	91	186	**216**	146	126	152	156	129	142	137	**189**	184	127	109	47	36	18	11	9
4	3	2	6	11	29	82	**225**	213	179	146	133	146	168	120	132	**145**	142	148	75	61	52	30	20	2

AM Peak 0745 - 0845 (902), AM PHF=0.89 PM Peak 1630 - 1730 (705), PM PHF=0.93

* Thursday, April 11, 2013=8722, 15 minute drops

0000	0100	0200	0300	0400	0500	0600	0700	0800	0900	1000	1100	1200	1300	1400	1500	1600	1700	1800	1900	2000	2100	2200	2300	
27	**22**	**7**	**12**	**22**	**73**	**227**	**681**	**785**	**534**	**540**	**503**	**586**	**590**	**607**	**625**	**544**	**746**	**533**	**380**	**290**	**177**	**102**	**115**	
8	3	2	2	3	11	28	105	166	**198**	116	112	156	140	142	171	138	**218**	143	126	100	53	38	30	8
8	6	0	3	6	17	38	147	**168**	122	184	107	134	145	159	153	127	**146**	121	86	65	43	28	24	12
9	6	4	2	5	20	69	202	**210**	95	144	136	143	152	171	148	159	**238**	132	90	65	40	20	40	9
2	7	1	6	8	25	93	228	**242**	119	97	149	154	154	135	153	120	**145**	139	78	60	41	17	21	7

AM Peak 0815 - 0915 (817), AM PHF=0.85 PM Peak 1700 - 1800 (746), PM PHF=0.78

* Friday, April 12, 2013=8551, 15 minute drops

0000	0100	0200	0300	0400	0500	0600	0700	0800	0900	1000	1100	1200	1300	1400	1500	1600	1700	1800	1900	2000	2100	2200	2300	
36	**26**	**21**	**16**	**20**	**75**	**217**	**554**	**707**	**464**	**517**	**570**	**596**	**604**	**571**	**597**	**693**	**658**	**546**	**385**	**274**	**168**	**127**	**115**	
8	8	5	4	4	12	40	84	**186**	114	132	133	165	159	129	162	171	**151**	181	125	82	43	46	36	15
12	4	5	4	6	13	38	113	**164**	108	105	125	150	154	126	136	144	**181**	141	99	77	51	28	20	17
9	6	6	6	4	20	61	151	**184**	114	132	144	142	135	150	181	202	**204**	116	71	62	39	34	35	14
7	8	5	2	6	30	78	**207**	174	128	149	169	139	156	166	118	**177**	122	108	91	54	36	19	24	13

AM Peak 0745 - 0845 (740), AM PHF=0.89 PM Peak 1645 - 1745 (712), PM PHF=0.87

* Saturday, April 13, 2013=6461, 15 minute drops

0000	0100	0200	0300	0400	0500	0600	0700	0800	0900	1000	1100	1200	1300	1400	1500	1600	1700	1800	1900	2000	2100	2200	2300	
59	**49**	**57**	**17**	**17**	**38**	**83**	**150**	**341**	**394**	**435**	**530**	**597**	**511**	**507**	**479**	**499**	**458**	**361**	**270**	**218**	**193**	**110**	**91**	
15	18	16	6	3	10	20	32	57	89	116	110	**124**	131	127	137	134	119	101	66	69	50	46	31	-
17	10	10	6	5	7	18	30	80	101	86	103	**153**	138	140	115	122	116	113	79	52	47	22	20	-
14	12	12	2	2	12	19	47	100	102	114	153	**164**	129	104	118	118	117	85	60	46	57	17	22	-
13	9	19	3	7	9	27	41	105	103	119	**165**	157	113	137	110	126	106	63	65	52	40	26	18	-

AM Peak 1145 - 1245 (605), AM PHF=0.92

MetroCount Traffic Executive
Event Counts

2081 -- English (ENU)

Datasets:

Site:	**21.NAPA ST (LINDA VISTA ROAD - RILEY ST) SOUTHBOUND**
Input A:	1 - North bound. - Lane= 0, Excluded from totals.
Input B:	3 - South bound. - Lane= 0, Added to totals. (/2.000)
Survey Duration:	12:40 Monday, April 08, 2013 => 8:57 Monday, April 15, 2013
File:	092115Apr2013.EC0 (Base)
Data type:	Axle sensors - Separate (Count)

Profile:

Filter time:	**0:00 Tuesday, April 09, 2013 => 0:00 Sunday, April 14, 2013**

* Tuesday, April 09, 2013=8872, 15 minute drops

0000	0100	0200	0300	0400	0500	0600	0700	0800	0900	1000	1100	1200	1300	1400	1500	1600	1700	1800	1900	2000	2100	2200	2300	
33	**15**	**12**	**6**	**52**	**142**	**231**	**331**	**448**	**448**	**487**	**553**	**709**	**584**	**581**	**536**	**868**	**874**	**597**	**526**	**374**	**263**	**128**	**79**	
11	3	4	0	5	26	33	66	104	122	93	114	**179**	141	123	144	271	**197**	160	168	87	60	49	31	21
13	1	2	2	15	37	59	86	83	119	114	156	**201**	129	127	104	205	**236**	145	141	93	76	25	15	17
5	5	3	1	10	32	48	91	128	107	116	149	**180**	171	187	128	194	**257**	143	106	101	60	27	21	8
4	6	3	3	23	48	92	90	133	101	164	**135**	150	144	144	161	**199**	185	150	113	94	68	27	12	7

AM Peak 1145 - 1245 (694), AM PHF=0.87 PM Peak 1645 - 1745 (888), PM PHF=0.86

* Wednesday, April 10, 2013=8640, 15 minute drops

0000	0100	0200	0300	0400	0500	0600	0700	0800	0900	1000	1100	1200	1300	1400	1500	1600	1700	1800	1900	2000	2100	2200	2300	
53	**18**	**12**	**9**	**40**	**140**	**244**	**326**	**400**	**494**	**441**	**562**	**590**	**568**	**547**	**539**	**828**	**864**	**597**	**525**	**346**	**272**	**147**	**84**	
21	1	7	3	5	19	53	66	112	132	92	130	**134**	134	114	159	252	**207**	161	161	77	88	41	28	15
17	3	3	0	11	40	62	68	92	107	108	151	**139**	153	149	125	196	**242**	150	135	90	77	41	27	7
8	5	1	4	8	37	58	85	89	124	114	151	**179**	127	115	119	174	**194**	116	126	83	49	37	16	11
7	9	1	2	17	44	72	108	108	132	127	**131**	139	155	170	136	207	**221**	171	105	96	59	29	13	13

AM Peak 1145 - 1245 (582), AM PHF=0.81 PM Peak 1700 - 1800 (864), PM PHF=0.89

* Thursday, April 11, 2013=8959, 15 minute drops

0000	0100	0200	0300	0400	0500	0600	0700	0800	0900	1000	1100	1200	1300	1400	1500	1600	1700	1800	1900	2000	2100	2200	2300	
46	**16**	**13**	**11**	**41**	**117**	**190**	**308**	**381**	**514**	**547**	**583**	**694**	**666**	**574**	**589**	**779**	**875**	**650**	**529**	**376**	**233**	**131**	**102**	
15	2	6	1	4	19	37	65	94	154	114	136	**171**	153	134	124	217	**194**	164	169	123	58	44	33	14
7	8	1	5	14	30	46	73	71	123	133	129	**153**	195	154	145	199	**247**	169	119	86	58	26	28	22
11	4	2	3	10	26	43	77	90	110	143	173	**187**	170	126	145	191	**238**	140	107	85	68	37	25	8
13	2	5	2	14	42	64	93	127	128	158	**146**	184	149	161	176	173	**197**	177	134	83	49	25	17	10

AM Peak 1145 - 1245 (656), AM PHF=0.88 PM Peak 1700 - 1800 (875), PM PHF=0.89

* Friday, April 12, 2013=8565, 15 minute drops

0000	0100	0200	0300	0400	0500	0600	0700	0800	0900	1000	1100	1200	1300	1400	1500	1600	1700	1800	1900	2000	2100	2200	2300	
54	**35**	**34**	**10**	**32**	**129**	**203**	**344**	**429**	**478**	**475**	**560**	**693**	**682**	**625**	**661**	**869**	**663**	**518**	**327**	**285**	**182**	**170**	**111**	
14	11	16	2	4	18	46	61	114	109	128	140	**158**	183	146	167	**218**	166	146	86	78	43	45	37	18
22	11	11	4	7	35	51	101	87	130	127	134	**176**	188	137	174	**221**	190	157	94	83	53	53	34	18
8	8	4	3	6	30	41	81	94	118	112	138	**174**	173	166	158	**245**	156	95	78	73	45	37	25	21
10	6	3	1	15	47	65	102	135	122	108	**149**	185	139	176	162	**186**	152	120	70	52	41	37	17	21

AM Peak 1145 - 1245 (657), AM PHF=0.94 PM Peak 1600 - 1700 (869), PM PHF=0.89

* Saturday, April 13, 2013=6844, 15 minute drops

0000	0100	0200	0300	0400	0500	0600	0700	0800	0900	1000	1100	1200	1300	1400	1500	1600	1700	1800	1900	2000	2100	2200	2300	
78	**45**	**46**	**12**	**17**	**47**	**117**	**210**	**333**	**440**	**496**	**620**	**685**	**536**	**570**	**479**	**483**	**374**	**327**	**282**	**205**	**195**	**156**	**97**	
18	13	19	4	4	8	7	47	62	105	119	130	**153**	147	128	146	133	98	78	65	55	52	49	29	-
18	10	13	5	3	10	21	50	72	114	128	151	**201**	121	145	94	129	89	86	85	54	52	37	28	-
21	9	10	0	6	14	27	51	82	91	111	**166**	151	130	141	121	107	101	100	70	58	39	32	24	-
21	14	4	3	4	15	63	63	117	131	139	**174**	180	139	157	119	115	87	64	63	39	53	38	16	-

AM Peak 1130 - 1230 (693), AM PHF=0.86

MetroCount Traffic Executive
Event Counts

2078 -- English (ENU)

Datasets:

Site:	**20.NAPA ST (MORENA BLVD - LINDA VISTA RD) NORTHBOUND**
Input A:	1 - North bound. - Lane= 0, Added to totals. (/2.000)
Input B:	3 - South bound. - Lane= 0, Subtracted from totals. (/-2.000)
Survey Duration:	14:16 Monday, April 08, 2013 => 12:07 Monday, April 15, 2013
File:	092015Apr2013.EC0 (Regular)
Data type:	Axle sensors - Split (Count)

Profile:

Filter time: **0:00 Tuesday, April 09, 2013 => 0:00 Sunday, April 14, 2013**

* Tuesday, April 09, 2013=14650, 15 minute drops

0000	0100	0200	0300	0400	0500	0600	0700	0800	0900	1000	1100	1200	1300	1400	1500	1600	1700	1800	1900	2000	2100	2200	2300	
43	**22**	**13**	**17**	**29**	**117**	**331**	**907**	**1062**	**821**	**740**	**817**	**961**	**922**	**989**	**1135**	**1249**	**1372**	**951**	**792**	**590**	**466**	**205**	**104**	
10	2	3	5	4	21	42	140	**277**	236	156	167	246	223	204	276	342	**338**	257	223	170	125	77	42	11
12	6	2	6	4	21	60	183	**238**	208	227	215	281	227	268	284	296	**362**	250	212	160	137	44	24	16
10	8	5	2	11	33	100	251	**300**	202	186	186	219	262	276	308	299	**368**	233	190	130	109	45	19	14
13	7	3	4	10	42	131	**333**	247	176	172	250	216	210	242	268	**313**	305	211	168	131	96	41	20	18

AM Peak 0745 - 0845 (1148), AM PHF=0.86 PM Peak 1645 - 1745 (1381), PM PHF=0.94

* Wednesday, April 10, 2013=14926, 15 minute drops

0000	0100	0200	0300	0400	0500	0600	0700	0800	0900	1000	1100	1200	1300	1400	1500	1600	1700	1800	1900	2000	2100	2200	2300	
58	**31**	**27**	**16**	**37**	**112**	**318**	**1064**	**1116**	**807**	**696**	**882**	**978**	**923**	**968**	**1103**	**1260**	**1355**	**1000**	**795**	**591**	**438**	**220**	**135**	
11	6	10	1	2	16	38	158	**331**	231	171	206	221	240	240	252	323	**318**	236	274	149	153	75	48	19
16	13	7	5	8	29	64	**249**	249	172	206	199	266	264	238	278	311	**382**	275	201	146	94	77	31	13
14	7	8	5	12	28	88	**277**	269	201	164	240	258	187	252	286	313	**380**	246	181	148	103	31	33	10
18	6	2	5	15	40	128	**380**	268	205	155	238	235	234	239	288	**314**	276	244	140	149	89	38	23	7

AM Peak 0715 - 0815 (1237), AM PHF=0.81 PM Peak 1645 - 1745 (1393), PM PHF=0.91

* Thursday, April 11, 2013=15170, 15 minute drops

0000	0100	0200	0300	0400	0500	0600	0700	0800	0900	1000	1100	1200	1300	1400	1500	1600	1700	1800	1900	2000	2100	2200	2300	
49	**43**	**22**	**18**	**34**	**116**	**310**	**971**	**1011**	**735**	**818**	**849**	**1094**	**1027**	**1100**	**1108**	**1380**	**1362**	**944**	**824**	**571**	**427**	**216**	**148**	
19	10	4	3	2	21	39	173	**236**	194	217	192	291	275	257	294	329	**332**	260	229	180	101	57	37	34
13	13	7	8	9	17	68	162	**253**	203	192	180	268	240	310	245	353	**369**	230	221	152	141	65	40	25
10	12	6	3	6	32	90	**304**	271	147	199	228	261	264	274	298	**389**	363	214	201	119	92	57	43	17
7	9	6	4	17	47	114	**333**	251	192	210	250	276	249	259	272	**310**	299	240	174	121	94	38	29	20

AM Peak 0730 - 0830 (1125), AM PHF=0.84 PM Peak 1630 - 1730 (1399), PM PHF=0.90

* Friday, April 12, 2013=15611, 15 minute drops

0000	0100	0200	0300	0400	0500	0600	0700	0800	0900	1000	1100	1200	1300	1400	1500	1600	1700	1800	1900	2000	2100	2200	2300	
95	**54**	**32**	**29**	**35**	**115**	**297**	**942**	**1032**	**754**	**847**	**925**	**1183**	**1050**	**1159**	**1199**	**1376**	**1360**	**996**	**690**	**534**	**437**	**277**	**197**	
34	13	11	5	8	18	41	157	272	193	205	227	**299**	282	272	284	342	**382**	263	198	134	101	77	65	40
25	8	11	8	10	16	67	164	220	179	189	243	**335**	288	292	315	356	**390**	299	176	154	121	67	53	31
17	19	5	11	8	31	74	263	245	190	239	234	**268**	256	278	310	**383**	313	256	145	149	117	68	42	31
20	15	6	5	10	50	115	359	296	193	215	**222**	282	225	318	290	**296**	275	179	172	97	99	65	37	34

AM Peak 1145 - 1245 (1123), AM PHF=0.84 PM Peak 1630 - 1730 (1451), PM PHF=0.93

* Saturday, April 13, 2013=12004, 15 minute drops

0000	0100	0200	0300	0400	0500	0600	0700	0800	0900	1000	1100	1200	1300	1400	1500	1600	1700	1800	1900	2000	2100	2200	2300	
135	**106**	**82**	**42**	**47**	**35**	**141**	**280**	**595**	**716**	**769**	**886**	**1019**	**939**	**954**	**905**	**974**	**869**	**746**	**541**	**396**	**393**	**264**	**175**	
40	22	27	13	9	6	40	50	133	171	206	216	**236**	245	240	249	264	194	212	135	118	101	86	52	-
31	26	20	13	6	3	25	45	123	190	161	222	**229**	250	248	241	242	237	190	144	82	102	62	48	-
31	24	16	8	13	14	36	83	155	160	200	221	**281**	203	222	222	214	258	196	154	93	95	57	40	-
34	35	19	9	19	13	41	102	184	195	203	**228**	274	242	244	194	254	181	149	108	105	96	60	36	-

AM Peak 1145 - 1245 (974), AM PHF=0.87

MetroCount Traffic Executive
Event Counts

2079 -- English (ENU)

Datasets:

Site:	**20.NAPA ST (MORENA BLVD - LINDA VISTA RD) SOUTHBOUND**
Input A:	1 - North bound. - Lane= 0, Excluded from totals.
Input B:	3 - South bound. - Lane= 0, Added to totals. (/2.000)
Survey Duration:	14:16 Monday, April 08, 2013 => 12:07 Monday, April 15, 2013
File:	092015Apr2013.EC0 (Regular)
Data type:	Axle sensors - Split (Count)

Profile:

Filter time: **0:00 Tuesday, April 09, 2013 => 0:00 Sunday, April 14, 2013**

* Tuesday, April 09, 2013=8889, 15 minute drops

0000	0100	0200	0300	0400	0500	0600	0700	0800	0900	1000	1100	1200	1300	1400	1500	1600	1700	1800	1900	2000	2100	2200	2300	
34	**21**	**13**	**11**	**17**	**64**	**177**	**436**	**553**	**482**	**505**	**546**	**744**	**606**	**590**	**547**	**870**	**869**	**703**	**411**	**267**	**239**	**128**	**62**	
7	1	2	6	1	14	22	66	123	152	102	125	**228**	145	128	138	232	**185**	185	107	74	75	48	25	14
9	3	4	3	3	13	33	99	106	113	148	150	**223**	159	158	127	156	**237**	179	106	67	53	25	19	8
8	9	5	0	6	16	54	145	147	111	128	131	**159**	169	168	165	209	**248**	173	96	59	52	29	11	13
10	8	2	2	7	21	69	127	179	106	127	**140**	135	134	136	118	**274**	200	166	103	67	60	28	8	18

AM Peak 1145 - 1245 (750), AM PHF=0.82 PM Peak 1645 - 1745 (943), PM PHF=0.86

* Wednesday, April 10, 2013=8977, 15 minute drops

0000	0100	0200	0300	0400	0500	0600	0700	0800	0900	1000	1100	1200	1300	1400	1500	1600	1700	1800	1900	2000	2100	2200	2300	
51	**37**	**22**	**9**	**16**	**56**	**162**	**454**	**492**	**528**	**466**	**628**	**680**	**626**	**571**	**645**	**796**	**926**	**632**	**400**	**351**	**213**	**138**	**83**	
14	3	12	0	1	11	23	78	117	166	86	124	**177**	185	143	143	198	**228**	172	132	89	77	43	24	14
8	13	3	0	3	21	30	83	122	105	139	168	**186**	167	139	149	178	**269**	135	102	121	57	57	20	10
13	13	5	3	5	11	56	148	115	125	115	**186**	171	136	137	156	203	**206**	136	102	75	50	21	23	9
18	9	3	6	7	14	54	146	139	133	127	**151**	147	139	153	198	219	**224**	189	65	66	29	18	17	10

AM Peak 1130 - 1230 (699), AM PHF=0.94 PM Peak 1700 - 1800 (926), PM PHF=0.86

* Thursday, April 11, 2013=9095, 15 minute drops

0000	0100	0200	0300	0400	0500	0600	0700	0800	0900	1000	1100	1200	1300	1400	1500	1600	1700	1800	1900	2000	2100	2200	2300	
42	**24**	**15**	**8**	**24**	**55**	**151**	**418**	**528**	**463**	**490**	**605**	**736**	**682**	**583**	**583**	**763**	**947**	**720**	**453**	**348**	**221**	**140**	**104**	
14	4	3	0	1	10	17	70	92	162	119	123	**207**	185	150	110	185	**204**	194	103	117	49	35	26	22
10	8	4	6	8	11	37	95	124	108	91	145	**173**	177	154	152	203	**308**	205	130	111	64	50	26	17
9	8	3	1	6	15	45	129	141	80	147	173	**182**	172	136	167	202	**260**	170	121	70	52	31	32	11
10	5	5	1	10	20	54	124	172	114	134	**165**	174	149	144	155	175	**176**	152	100	50	57	24	21	14

AM Peak 1145 - 1245 (726), AM PHF=0.88 PM Peak 1700 - 1800 (947), PM PHF=0.77

* Friday, April 12, 2013=9201, 15 minute drops

0000	0100	0200	0300	0400	0500	0600	0700	0800	0900	1000	1100	1200	1300	1400	1500	1600	1700	1800	1900	2000	2100	2200	2300	
63	**62**	**35**	**21**	**21**	**63**	**159**	**434**	**470**	**475**	**495**	**610**	**784**	**662**	**575**	**661**	**919**	**808**	**677**	**421**	**284**	**236**	**149**	**124**	
22	11	14	4	4	10	18	79	103	115	130	153	**209**	199	140	162	221	**215**	200	120	65	58	40	48	33
17	11	12	9	4	12	44	65	100	116	100	164	**218**	181	145	170	198	**240**	202	117	71	56	36	38	24
11	28	6	5	2	18	34	138	103	112	122	127	**150**	151	126	152	**263**	172	150	92	91	74	38	17	25
14	12	3	3	11	23	64	153	165	133	143	**167**	208	131	166	178	**238**	181	125	92	58	49	36	21	35

AM Peak 1145 - 1245 (743), AM PHF=0.85 PM Peak 1630 - 1730 (956), PM PHF=0.91

* Saturday, April 13, 2013=7558, 15 minute drops

0000	0100	0200	0300	0400	0500	0600	0700	0800	0900	1000	1100	1200	1300	1400	1500	1600	1700	1800	1900	2000	2100	2200	2300	
116	**107**	**74**	**32**	**28**	**20**	**78**	**165**	**394**	**449**	**569**	**654**	**625**	**565**	**647**	**561**	**583**	**481**	**427**	**297**	**189**	**212**	**168**	**125**	
33	26	19	9	11	2	19	30	83	96	127	**167**	149	158	153	146	163	115	118	72	53	43	62	34	-
24	19	27	12	4	2	14	22	81	134	148	**202**	161	173	148	135	162	142	114	98	45	57	40	44	-
25	28	16	6	7	5	16	52	104	94	**135**	132	145	140	152	143	118	114	104	71	44	51	30	28	-
35	34	12	5	6	11	29	62	127	125	**160**	154	170	94	195	138	141	111	92	57	47	62	36	20	-

AM Peak 1030 - 1130 (663), AM PHF=0.82

24 Hour Segment Count

Accurate Video Counts Inc
info@accuratevideocounts.com
(619) 987-5136

Location: Colusa Street btw Friars Road to Linda Vista Road

Orientation: *North-South*

Date of Count: *Wednesday, May 07, 2014*

Analysts: *DASH*

Weather: *Sunny*

AVC Proj. No: *14-0199*

24 Hour Segment Volume				*2,190*			
Time	**Hourly Volume**			**Time**	**Hourly Volume**		
	NB	**SB**	**Total**		**NB**	**SB**	**Total**
12:00 AM - 1:00 AM	6	12	18	12:00 PM - 1:00 PM	55	66	121
1:00 AM - 2:00 AM	6	3	9	1:00 PM - 2:00 PM	58	74	132
2:00 AM - 3:00 AM	2	4	6	2:00 PM - 3:00 PM	61	86	147
3:00 AM - 4:00 AM	0	1	1	3:00 PM - 4:00 PM	54	99	153
4:00 AM - 5:00 AM	4	1	5	4:00 PM - 5:00 PM	68	108	176
5:00 AM - 6:00 AM	4	10	14	5:00 PM - 6:00 PM	77	137	214
6:00 AM - 7:00 AM	24	53	77	6:00 PM - 7:00 PM	70	98	168
7:00 AM - 8:00 AM	77	61	138	7:00 PM - 8:00 PM	53	71	124
8:00 AM - 9:00 AM	82	75	157	8:00 PM - 9:00 PM	38	48	86
9:00 AM - 10:00 AM	57	46	103	9:00 PM - 10:00 PM	30	43	73
10:00 AM - 11:00 AM	49	46	95	10:00 PM - 11:00 PM	28	20	48
11:00 AM - 12:00 PM	39	57	96	11:00 PM - 12:00 AM	14	15	29
Total	**350**	**369**	**719**	**Total**	**606**	**865**	**1,471**

24-Hour	*NB*	*Volume*	*956*	*24-Hour*	*SB*	*Volume*	*1,234*

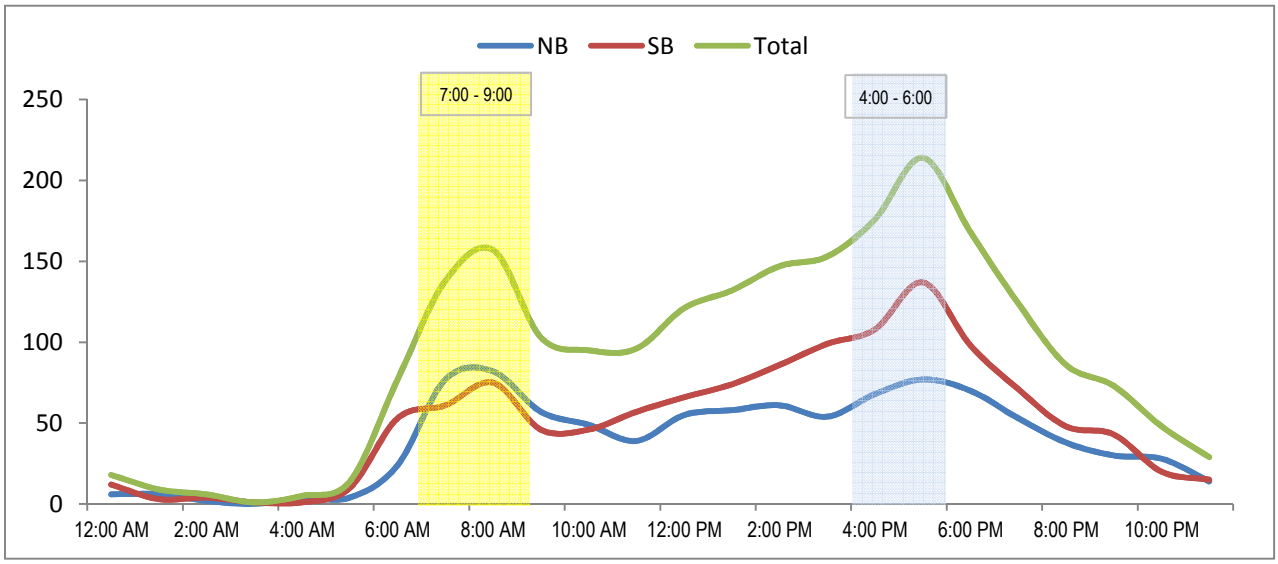

24 Hour Segment Count

Accurate Video Counts Inc
info@accuratevideocounts.com
(619) 987-5136

Location: Via Las Cumbres btw Friars Road to Linda Vista Road

Orientation: *North-South*

Date of Count: *Wednesday, May 07, 2014*

Analysts: *DASH*

Weather: *Sunny*

AVC Proj. No: *14-0199*

24 Hour Segment Volume ***7,858***

Time	Hourly Volume NB	Hourly Volume SB	Hourly Volume Total	Time	Hourly Volume NB	Hourly Volume SB	Hourly Volume Total
12:00 AM - 1:00 AM	20	18	38	12:00 PM - 1:00 PM	214	276	490
1:00 AM - 2:00 AM	11	13	24	1:00 PM - 2:00 PM	245	224	469
2:00 AM - 3:00 AM	7	7	14	2:00 PM - 3:00 PM	250	272	522
3:00 AM - 4:00 AM	0	3	3	3:00 PM - 4:00 PM	291	267	558
4:00 AM - 5:00 AM	5	9	14	4:00 PM - 5:00 PM	294	347	641
5:00 AM - 6:00 AM	34	27	61	5:00 PM - 6:00 PM	331	445	776
6:00 AM - 7:00 AM	114	63	177	6:00 PM - 7:00 PM	223	277	500
7:00 AM - 8:00 AM	562	159	721	7:00 PM - 8:00 PM	198	232	430
8:00 AM - 9:00 AM	354	165	519	8:00 PM - 9:00 PM	162	155	317
9:00 AM - 10:00 AM	211	134	345	9:00 PM - 10:00 PM	122	131	253
10:00 AM - 11:00 AM	169	158	327	10:00 PM - 11:00 PM	71	91	162
11:00 AM - 12:00 PM	214	210	424	11:00 PM - 12:00 AM	38	35	73
Total	**1,701**	**966**	**2,667**	**Total**	**2,439**	**2,752**	**5,191**

24-Hour NB Volume 4,140 ***24-Hour SB Volume 3,718***

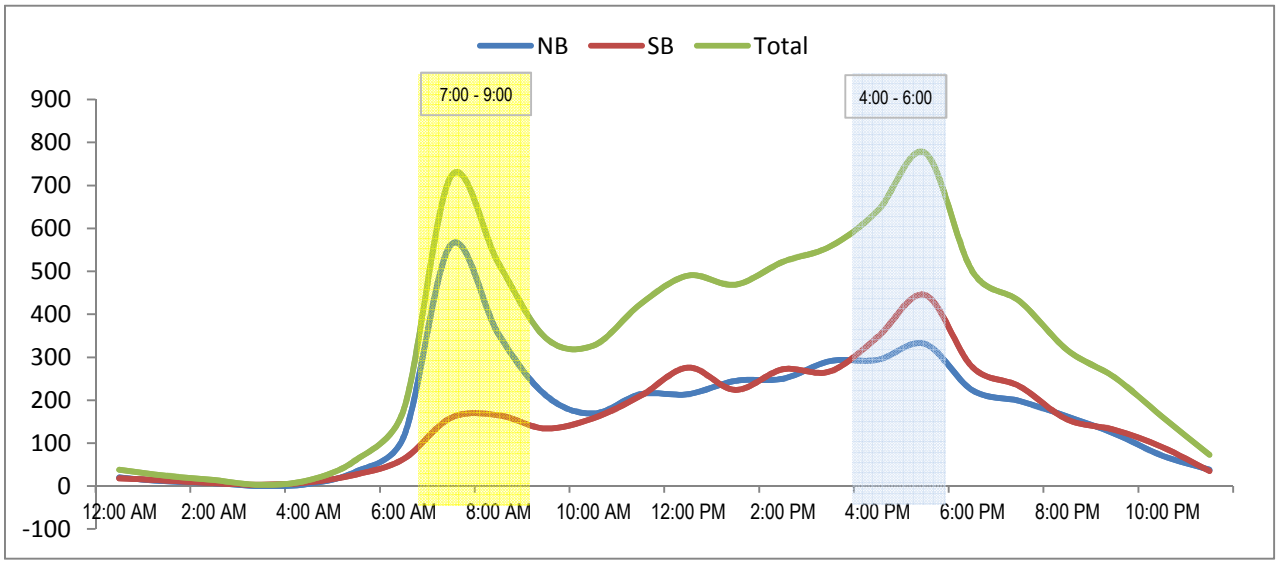

① BAD 08 LOOKS

INTERSECTION: Buenos St & W Morena Bl

223 Program

Group Assignment:
Field Master Assignment:

N/S Street Name: W MORENA BL
E/W Street Name: BUENOS ST

Last Database Change:
System Ref. Number:

N

Row	Column # --->	1	2	3	4	5	6	7	8
		W. Morena			Buenos		W. Morena		Buenos
	Phase # --->	1	2	3	4	5	6	7	8
0	Ped Walk		7				7		7
1	Ped FDW		15				9		28
2	Min Green	4	7		4	4	7		6① ~~4~~
3	Type 3 Limit								
4	Add/Veh								
5	Veh Extn	2.0	3.6		2.0	2.0	4.3		2.0
6	Max Gap	2.0	3.6		2.0	2.0	4.3		2.0
7	Min Gap	2.0	0.2		2.0	2.0	0.2		2.0
8	Max Limit	30	60		40	30	60		40
9	Max Limit 2								
A	Bus Adv								
B	Call to Phs								
C	Reduce By		0.1				0.1		
D	Every		0.9				0.7		
E	Yellow	3.4	4.8		3.9	3.4	4.5		3.9
F	Red Clear	1.0	1.0		1.0	1.0	1.0		1.0

Phase Timing - Bank 1
F + Phase + Row

	E
RR-1 Delay	
RR-1 Clear	
EV-A Delay	0
EV-A Clear	0
EV-B Delay	
EV-B Clear	
EV-C Delay	0
EV-C Clear	0
EV-D Delay	
EV-D Clear	
RR-2 Delay	
RR-2 Clear	
View EV Delay	---
View EV Clear	---
View RR Delay	---
View RR Clear	---

Preempt Timing
F + E + Row

Row		F
0	Permit	12_456_8
1	Red Lock	
2	Yellow Lock	
3	Min Recall	①8
4	Ped Recall	
5	Peds (View)	_2__6_8
6	Rest In Walk	
7	Red Rest	
8	Dbl Entry	__4__8
9	Max Recall	
A	Soft Recall	_2__6__
B	Max 2	
C	Cond Serv	
D	Ped Lock	12345678
E	Yellow Start	_2__6__
F	1st Phases	__4__8

Phase Functions <F Page>
F + F + Row

Max Initial	0
Red Revert	5.0
All Red Start	0.0

F + 0 + E
F + 0 + F
F + C + O

Start / Revert Times

Drop Number	8	C + 0 + 0
Zone Number	8	C + 0 + 1
Area Number	5	C + 0 + 2
Area Address	91	C + 0 + 3
QuicNet Channel	COM52:	(QuicNet)

Communication Addresses

C + F + O	F	Row
Free Lag	_2_4_6_8	0

Lag Phases <C Page>

Overlap Timing

	Row	9 Green Clear	C Yellow Change	D Red Clear	0 Load-Switch #
Overlap A	A				
Overlap B	B				
Overlap C	C				
Overlap D	D				

<F Page>
F + COLOR +

<D Page>
D + 0 + OVERLAP

Manual Plan	0	C + A + 1
Manual Offset	0	C + B + 1

Manual Selection

Manual Plan
0 = Automatic
1-9 = Plan 1-9
14 = Free
15 = Flash

Manual Offset
0 = Automatic
1 = Offset A
2 = Offset B
3 = Offset C

Downtime Flash	255	(minutes)

Downtime Before Auto Manual Flash
F + 0 +8

Disable Ports	234

Disable Communication Ports
D + D + 9

Timing Sheet By: LEM
Approved By: FLG
Drawing Number: 20407-5-D
Timing Implemented On: 4/21/10

Printed on 4/19/2010 4:21 PM

City of San Diego

INTERSECTION: Buenos St & W Morena Bl

Row	Time	Function	Day of Week	Column F Phases/Bits
0	00 : 01	E	1234567	1_____
1				
2				
3				
4				
5				
6				
7				
8				
9				
A				
B				
C				
D				
E				
F				

TOD Function

7 + ROW

<D Page>

D + F + ROW

T.O.D. Functions
0 = Permitted Phases
1 = Red Lock
2 = Yellow Lock
3 = Veh Min Recall
4 = Ped Recall
5 =
6 = Rest In Walk
7 = Red Rest
8 = Double Entry
9 = Veh Max Recall
A = Veh Soft Recall
B = Maximum 2
C = Conditional Service
D = Free Lag Phases
E = Bit 1 - Local Override
Bit 2 - Phase Bank 2
Bit 3 - Phase Bank 3
Bit 4 - Disable Detector OFF Monitor
Bit 7 - Detector Count Monitor
Bit 8 - Real Time Split Monitor
F = Output Bits 1 thru 4

Row		F
0		
1	RR Overlap A - Phases	
2	RR Overlap B - Phases	
3	RR Overlap C - Phases	
4	RR Overlap D - Phases	
5	Ped 2P	_2_____
6	Ped 6P	_____6__
7	Ped 4P	
8	Ped 8P	_____8
9	Yellow Flash Phases	
A	Overlap A - Phases	
B	Overlap B - Phases	
C	Overlap C - Phases	
D	Overlap D - Phases	
E	Restricted Phases	
F	Assign 5 Outputs	

Configuration

<E Page>

E + F + ROW

Day of Week

1 = Sunday
2 = Monday
3 = Tuesday
4 = Wednesday
5 = Thursday
6 = Friday
7 = Saturday

Row		E
0	Exclusive Phases	
1	RR-1 Clear Phases	
2	RR-2 Clear Phases	
3	RR-2 Limited Service	
4	Prot / Perm Phases	
5	Overlap A - Green Omit	
6	Overlap B - Green Omit	
7	Overlap C - Green Omit	
8	Overlap D - Green Omit	
9	Overlap Yellow Flash	
A	EV-A Phases	_2__5___
B	EV-B Phases	
C	EV-C Phases	1____6__
D	EV-D Phases	
E	Extra 1 Config. Bits	1_345___
F	IC Select (Interconnect)	_2_____

Configuration

For access, set F + 9 + E = 1

E + E + ROW

Extra 1 Flags
1 = TBC Type 1
2 = NEMA Ext. Coord
3 = Auto Daylight Savings
4 = EV Advance
5 = Remote Download
6 = Special Event
7 = Pretimed Operation
8 = Split Ring Operation

IC Select Flags
1 =
2 = Modem
3 = 7-Wire Slave
4 = Flash / Free
5 =
6 = Simplex Master
7 = 7-Wire Master
8 = Offset Interrupter

Assign 5 Outputs
1 = Right Turn Overlap
2 = TOD Outputs
3 = EV Beacon - Steady
4 = EV Beacon - Flashing
5 = Special Event Outputs
6 = Phase 3 & 7 Ped
7 = Advanced Warning Sign
8 =

Time and Date

8-0 Hour, Minute, Day-of-Week
8-1 Day-of-Month, Year, Month
8-F Seconds

Disable Parity	0	D+B+0

Dial-Up Telephone Communications

(If set to a non-zero value, parity will be disabled)

Program Information

C + C + 0 = program
C + C + F = version

Remote Download

C + 0 + 4 = 1 -255
w/ E + E + E bit 5 on

Row	1 Delay	3 Carry-over
0		
1		1.8
2		
3		
4		
5		
6		
7	5.0	
8		
9	7.0	
A		
B		
C		
D		
E	---	---
F	---	---

Detector Name	332 Input File	Detector Number
	1I1	14
	2I2U	1
	2I2L	5
	2I3U	21
	2I3L	25
	2I4	9
	3I5	16
	4I6U	3
	4I6L	7
	4I7U	23
	4I7L	27
	4I8	11
	1I9U	18
	3I9L	20
---	---	---
---	---	---

Row	2 Delay	4 Carry-over
0		
1		1.8
2		
3		
4		
5		
6		
7	10.0	
8		
9		
A		
B		
C		
D		
E	---	---
F	---	---

Detector Name	332 Input File	Detector Number
	5J1	13
	6J2U	2
	6J2L	6
	6J3U	22
	6J3L	26
	6J4	10
	7J5	15
	8J6U	4
	8J6L	8
	8J7U	24
	8J7L	28
	8J8	12
	5J9U	17
	7J9L	19
---	---	---
---	---	---

Detector Delay & Carryover <D Page>

D + X (across) + ROW

Row	Detector Numbers	E
A	1 2 3 4 5 6 7 8	12345678
B	9 10 11 12 -- -- -- --	1234____
C	13 14 15 16 17 18 19 20	12345678
D	-- -- -- -- 21 22 23 24	____5678
E	-- -- -- -- -- -- -- --	1234____
F	-- 25 26 27 28 -- -- --	_2345___

Active Detectors <D Page>

Row		0 Detector #
0		
1	System Det. # 1	0
2	System Det. # 2	0
3	System Det. # 3	0
4	System Det. # 4	0
5	System Det. # 5	0
6	System Det. # 6	0
7	System Det. # 7	0
8	System Det. # 8	0

System Detectors <D Page>

Max ON (min)	5	D+A+E
Max OFF (min)	60	D+A+F

Detector Failure Monitor

Phase Number	0	F+C+1
Time Before Yellow	0.0	F+C+3

Advance Warning Beacon - Sign 1

Phase Number	0	F+D+1
Time Before Yellow	0.0	F+D+3

Advance Warning Beacon - Sign 2

Long Failure	0.5	F+0+6
Short Failure	0.5	F+0+7

Power Cycle Correction (Default = 0.5)

INTERSECTION: Buenos St & W Morena Bl

223 Program

Coordination Timing By: LG
Implemented On: 10/27/2009

Row	Plan Name --->	Plan 1	Plan 2	Plan 3	Plan 4	Plan 5	Plan 6	Plan 7	Plan 8	Plan 9
	Column # --->	1	2	3	4	5	6	7	8	9
			MID		AM	PM				
0	Cycle Length		96		55	68				
1	Phase 1 - ForceOff		50		40	30				
2	Phase 2 - ForceOff		0		0	0				
3	Phase 3 - ForceOff									
4	Phase 4 - ForceOff		38		25	20				
5	Phase 5 - ForceOff		50		40	30				
6	Phase 6 - ForceOff		0		0	0				
7	Phase 7 - ForceOff									
8	Phase 8 - ForceOff		38		25	20				
9	Ring Offset									
A	Offset A		46		11	8				
B	Offset B									
C	Offset C									
D	Permissive		10		6	7				
E	Hold Release		255		255	255				
F	Ped Shift		0		5	0				

Coordination <C Page>

C + Plan + ROW

FOR OBSERVATION ONLY

Master Plan	C + A + 2
Current Plan	C + A + 3
Next Plan	C + A + 4
T.O.D. Plan	C + A + 5
Master Cycle	C + A + 0
Ring A Cycle	C + B + 0
Ring B Cycle	C + D + 0
Min Cycle	C + A + E
Max Cycle	C + B + E

Row	Time	Plan	Offset	Day of Week
0	06 : 30	4	A	23456
1	08 : 30	E	A	1234567
2	10 : 30	2	A	23456
3	13 : 30	E	A	1234567
4	15 : 30	5	A	23456
5	18 : 00	E	A	1234567
6				
7				
8				
9				
A				
B				
C				
D				
E				
F				

TOD Coordination

<9 Key with C+0+9=1>

	E
Plan 1	
Plan 2	2 6
Plan 3	
Plan 4	2 6
Plan 5	2 6
Plan 6	
Plan 7	
Plan 8	
Plan 9	
Coord Ped*	
NEMA Hold	

Sync Phases

C + E + FUNCTION #

Row		F
0	Free Lag	2 4 6 8
1	Plan 1 - Lag	
2	Plan 2 - Lag	2 4 6 8
3	Plan 3 - Lag	
4	Plan 4 - Lag	2 4 6 8
5	Plan 5 - Lag	2 4 6 8
6	Plan 6 - Lag	
7	Plan 7 - Lag	
8	Plan 8 - Lag	
9	Plan 9 - Lag	
A	Coord Max *	
B	Coord Lag *	
C		
D		
E		
F		

Lag Phases <C Page>

C + F + FUNCTION #

Transition Type	0

TBC Transition
C + D + D

Plan Select
1 thru 9 = Coordination Plan 1 thru 9
14 or E = Free
15 or F = Flash

Transition Type
0 = Shortway
Non-zero = Lengthen

INTERSECTION: COLUSA St & FRIARS Rd

223 Program

Group Assignment:
Field Master Assignment:

N/S Street Name: COLUSA St
E/W Street Name: FRIARS Rd

Last Database Change:
System Ref. Number:

N

Column # ---->	FRIARS			COLUSA		FRIARS		COLUSA
Phase # ---->	1	2	3	4	5	6	7	8
Row								
0 Ped Walk		7		7		7		
1 Ped FDW		17		24		9		
2 Min Green	4	10		4	4	10		4
3 Type 3 Limit								
4 Add/Veh								
5 Veh Extn	2.0	6.1		2.0	2.0	6.4		2.0
6 Max Gap	2.0	6.1		2.0	2.0	6.4		2.0
7 Min Gap	2.0	0.2		2.0	2.0	0.2		2.0
8 Max Limit	30	60		40	30	60		40
9 Max Limit 2								
A Bus Adv								
B Call to Phs								
C Reduce By		0.1				0.1		
D Every		0.5				0.5		
E Yellow	3.4	4.7		3.9	3.4	5.0		3.9
F Red Clear	1.0	1.0		1.0	1.0	1.0		1.0
Grade								

Phase Timing - Bank 1
F + Phase + Row

<F Page>

	E
RR-1 Delay	
RR-1 Clear	
EV-A Delay	0
EV-A Clear	0
EV-B Delay	
EV-B Clear	
EV-C Delay	0
EV-C Clear	0
EV-D Delay	
EV-D Clear	
RR-2 Delay	
RR-2 Clear	
View EV Delay	---
View EV Clear	---
View RR Delay	---
View RR Clear	---

Preempt Timing
F + E + Row

Row		F
0	Permit	12_456_8
1	Red Lock	
2	Yellow Lock	
3	Min Recall	
4	Ped Recall	
5	Peds (View)	_2_4_6__
6	Rest In Walk	
7	Red Rest	
8	Dbl Entry	___4___8
9	Max Recall	
A	Soft Recall	_2___6__
B	Max 2	
C	Cond Serv	
D	Ped Lock	12345678
E	Yellow Start	_2___6__
F	1st Phases	___4___8

Phase Functions <F Page>
F + F + Row

Max Initial	0	F + 0 + E
Red Revert	5.0	F + 0 + F
All Red Start	0.0	F + C + O

Start / Revert Times

Drop Number	5	C + 0 + 0
Zone Number	5	C + 0 + 1
Area Number	5	C + 0 + 2
Area Address	82	C + 0 + 3
QuicNet Channel	DIGI 47:	(QuicNet)

Communication Addresses

Overlap Timing

	Row	9 Green Clear	C Yellow Change	D Red Clear	0 Load-Switch #
Overlap A	A				
Overlap B	B				
Overlap C	C				
Overlap D	D				

<F Page>
F + COLOR +

<D Page>
D + 0 + OVERLAP

Manual Plan	14	C + A + 1
Manual Offset	0	C + B + 1

Manual Selection

Manual Plan
0 = Automatic
1-9 = Plan 1-9
14 = Free
15 = Flash

Manual Offset
0 = Automatic
1 = Offset A
2 = Offset B
3 = Offset C

C + F + O

	F	Row
Free Lag	_2_4_6_8	0

Lag Phases <C Page>

Downtime Flash	255	(minutes)

Downtime Before Auto Manual Flash
F + 0 +8

Disable Ports	234

Disable Communication Ports
D + D + 9

Timing Sheet By: WXW
Approved By: EFF
Drawing Number:
Timing Implemented On: 2/24/05

INTERSECTION: COLUSA St & FRIARS Rd

223 Program

Row	Time	Function	Day of Week	Column F Phases/Bits
0				
1				
2				
3				
4				
5				
6				
7				
8				
9				
A				
B				
C				
D				
E				
F				

TOD Function

7 + ROW

<D Page>

D + F + ROW

T.O.D. Functions
0 = Permitted Phases
1 = Red Lock
2 = Yellow Lock
3 = Veh Min Recall
4 = Ped Recall
5 =
6 = Rest In Walk
7 = Red Rest
8 = Double Entry
9 = Veh Max Recall
A = Veh Soft Recall
B = Maximum 2
C = Conditional Service
D = Free Lag Phases
E = Bit 1 - Local Override
Bit 2 - Phase Bank 2
Bit 3 - Phase Bank 3
Bit 4 - Disable Detector OFF Monitor
Bit 7 - Detector Count Monitor
Bit 8 - Real Time Split Monitor
F = Output Bits 1 thru 4

Row		F
0		
1	RR Overlap A - Phases	
2	RR Overlap B - Phases	
3	RR Overlap C - Phases	
4	RR Overlap D - Phases	
5	Ped 2P	2
6	Ped 6P	6
7	Ped 4P	4
8	Ped 8P	
9	Yellow Flash Phases	
A	Overlap A - Phases	
B	Overlap B - Phases	
C	Overlap C - Phases	
D	Overlap D - Phases	
E	Restricted Phases	
F	Assign 5 Outputs	

Configuration

<E Page>

E + F + ROW

Day of Week

1 = Sunday
2 = Monday
3 = Tuesday
4 = Wednesday
5 = Thursday
6 = Friday
7 = Saturday

Assign 5 Outputs
1 = Right Turn Overlap
2 = TOD Outputs
3 = EV Beacon - Steady
4 = EV Beacon - Flashing
5 = Special Event Outputs
6 = Phase 3 & 7 Ped
7 = Advanced Warning Sign
8 =

Row		E
0	Exclusive Phases	
1	RR-1 Clear Phases	
2	RR-2 Clear Phases	
3	RR-2 Limited Service	
4	Prot / Perm Phases	
5	Overlap A - Green Omit	
6	Overlap B - Green Omit	
7	Overlap C - Green Omit	
8	Overlap D - Green Omit	
9	Overlap Yellow Flash	
A	EV-A Phases	2 5
B	EV-B Phases	
C	EV-C Phases	1 6
D	EV-D Phases	
E	Extra 1 Config. Bits	1 345
F	IC Select (Interconnect)	2

Configuration

For access, set F + 9 + E = 1

E + E + ROW

Extra 1 Flags
1 = TBC Type 1
2 = NEMA Ext. Coord
3 = Auto Daylight Savings
4 = EV Advance
5 = Remote Download
6 = Special Event
7 = Pretimed Operation
8 = Split Ring Operation

IC Select Flags
1 =
2 = Modem
3 = 7-Wire Slave
4 = Flash / Free
5 =
6 = Simplex Master
7 = 7-Wire Master
8 = Offset Interrupter

Time and Date

8-0 Hour, Minute, Day-of-Week
8-1 Day-of-Month, Year, Month
8-F Seconds

Disable Parity	0	D+B+0

Dial-Up Telephone Communications

(If set to a non-zero value, parity will be disabled)

Program Information

C + C + 0 = program
C + C + F = version

Remote Download

C + 0 + 4 = 1 -255
w/ E + E + E bit 5 on

INTERSECTION: COLUSA St & FRIARS Rd

223 Program

Row	1 Delay	3 Carry-over
0		
1		1.8
2		
3		
4		
5		
6		
7		
8	10.0	
9		
A		
B		
C		
D		
E	---	---
F	---	---

Detector Name	332 Input File	Detector Number
	1I1	14
	2I2U	1
	2I2L	5
	2I3U	21
	2I3L	25
	2I4	9
	3I5	16
	4I6U	3
	4I6L	7
	4I7U	23
	4I7L	27
	4I8	11
	1I9U	18
	3I9L	20
---	---	---
---	---	---

Row	2 Delay	4 Carry-over
0		
1		1.8
2		
3		
4		
5		
6		
7		
8	10.0	
9		
A		
B		
C		
D		
E	---	---
F	---	---

Detector Name	332 Input File	Detector Number
	5J1	13
	6J2U	2
	6J2L	6
	6J3U	22
	6J3L	26
	6J4	10
	7J5	15
	8J6U	4
	8J6L	8
	8J7U	24
	8J7L	28
	8J8	12
	5J9U	17
	7J9L	19
---	---	---
---	---	---

Detector Delay & Carryover <D Page>

D + X (across) + ROW

Row	Detector Numbers	E
A	1 2 3 4 5 6 7 8	12345678
B	9 10 11 12 -- -- -- --	1234
C	13 14 15 16 17 18 19 20	12345678
D	-- -- -- -- 21 22 23 24	5678
E	-- -- -- -- -- -- -- --	1234
F	-- 25 26 27 28 -- -- --	2345

Active Detectors <D Page>

Row		0 Detector #
0		
1	System Det. # 1	0
2	System Det. # 2	0
3	System Det. # 3	0
4	System Det. # 4	0
5	System Det. # 5	0
6	System Det. # 6	0
7	System Det. # 7	0
8	System Det. # 8	0

System Detectors <D Page>

Max ON (min)	5	D+A+E
Max OFF (min)	60	D+A+F

Detector Failure Monitor

Phase Number	0	F+C+1
Time Before Yellow	0.0	F+C+3

Advance Warning Beacon - Sign 1

Phase Number	0	F+D+1
Time Before Yellow	0.0	F+D+3

Advance Warning Beacon - Sign 2

Long Failure	0.5	F+0+6
Short Failure	0.5	F+0+7

Power Cycle Correction (Default = 0.5)

ITERSECTION: COMSTOCK @ LINDA VISTA

223 F gram

(3)

Group Assignment: 4056
Field Master Assignment: NONE

N/S Street Name: LINDA VISTA
E/W Street Name: COMSTOCK

Last Database Change:
System Ref. Number: 460

Row	Column # ---> / Phase # --->	Linda Vista rd 1	2	3	Comstock St 4	5	Linda Vista rd 6	7	Comstock St 8
0	Ped Walk		7		7		7		7
1	Ped FDW		17		24		18		25
2	Min Green	4	10		7	4	10		7
3	Type 3 Limit								
4	Add/Veh								
5	Veh Extn	2.0	2.5		2.0	2.0	3.9		2.0
6	Max Gap	2.0	2.5		2.0	2.0	3.9		2.0
7	Min Gap	2.0	0.2		2.0	2.0	0.2		2.0
8	Max Limit	30	60		40	30	30		40
9	Max Limit 2								
A	Bus Adv								
B	Call to Phs								
C	Reduce By		0.1				0.1		
D	Every		1.3				0.8		
E	Yellow	3.4	4.2		3.9	3.4	3.9		3.9
F	Red Clear	1.0	1.0		1.0	1.0	1.0		1.0
	Grade								

Phase Timing - Bank 1
F + Phase + Row

<F Page>

	E
RR-1 Delay	
RR-1 Clear	
EV-A Delay	0
EV-A Clear	0
EV-B Delay	0
EV-B Clear	0
EV-C Delay	0
EV-C Clear	0
EV-D Delay	0
EV-D Clear	0
RR-2 Delay	
RR-2 Clear	
View EV Delay	---
View EV Clear	---
View RR Delay	---
View RR Clear	---

Preempt Timing
F + E + Row

	F	Row
Permit	12_456_8	0
Red Lock		1
Yellow Lock		2
Min Recall	_2___6__	3
Ped Recall		4
Peds (View)	_2_4_6_8	5
Rest In Walk		6
Red Rest		7
Dbl Entry	___4___8	8
Max Recall		9
Soft Recall		A
Max 2		B
Cond Serv		C
Ped Lock	12345678	D
Yellow Start	_2___6__	E
1st Phases	___4___8	F

Phase Functions <F Page>
F + F + Row

Max Initial	0	F + 0 + E
Red Revert	5.0	F + 0 + F
All Red Start	0.0	F + C + O

Start / Revert Times

Drop Number	10	C + 0 + 0
Zone Number	10	C + 0 + 1
Area Number	5	C + 0 + 2
Area Address	52	C + 0 + 3
QuicNet Channel	COM44:	(QuicNet)

Communication Addresses

C + F + O	F	Row
Free Lag	_2_4_6_8	0
	Lag Phases	<C Page>

Overlap Timing

	Row	9 Green Clear	C Yellow Change	D Red Clear	0 Load-Switch #
Overlap A	A				
Overlap B	B				
Overlap C	C				
Overlap D	D				

<F Page> F + COLOR +

<D Page> D + 0 + OVERLAP

Manual Plan	0	C + A + 1
Manual Offset	0	C + B + 1

Manual Selection

Manual Plan
0 = Automatic
1-9 = Plan 1-9
14 = Free
15 = Flash

Manual Offset
0 = Automatic
1 = Offset A
2 = Offset B
3 = Offset C

Downtime Flash	255	(minutes)

Downtime Before Auto Manual Flash
F + 0 +8

Disable Ports	_234___

Disable Communication Ports
D + D + 9

Timing Sheet By: JS2
Approved By: FLG
Drawing Number: 27945-14-0
Timing Implemented On: 6/1/10

INTERSECTION: COMSTOCK @ LINDA VISTA

Row	Time	Function	Day of Week	Column F Phases/Bits
0	00 : 01	E	1234567	1_____
1	:			
2	:			
3	:			
4	:			
5	:			
6	:			
7	:			
8	:			
9	:			
A	:			
B	:			
C	:			
D	:			
E	:			
F	:			

TOD Function

7 + ROW

<D Page>

D + F + ROW

T.O.D. Functions
0 = Permitted Phases
1 = Red Lock
2 = Yellow Lock
3 = Veh Min Recall
4 = Ped Recall
5 =
6 = Rest in Walk
7 = Red Rest
8 = Double Entry
9 = Veh Max Recall
A = Veh Soft Recall
B = Maximum 2
C = Conditional Service
D = Free Lag Phases
E = Bit 1 - Local Override
Bit 2 - Phase Bank 2
Bit 3 - Phase Bank 3
Bit 4 - Disable Detector OFF Monitor
Bit 7 - Detector Count Monitor
Bit 8 - Real Time Split Monitor
F = Output Bits 1 thru 4

Row		F
0		
1	RR Overlap A - Phases	
2	RR Overlap B - Phases	
3	RR Overlap C - Phases	
4	RR Overlap D - Phases	
5	Ped 2P	2_____
6	Ped 6P	____6__
7	Ped 4P	___4___
8	Ped 8P	_____8
9	Yellow Flash Phases	
A	Overlap A - Phases	
B	Overlap B - Phases	
C	Overlap C - Phases	
D	Overlap D - Phases	
E	Restricted Phases	
F	Assign 5 Outputs	

Configuration <E Page>

E + F + ROW

Day of Week

1 = Sunday
2 = Monday
3 = Tuesday
4 = Wednesday
5 = Thursday
6 = Friday
7 = Saturday

Row		E
0	Exclusive Phases	
1	RR-1 Clear Phases	
2	RR-2 Clear Phases	
3	RR-2 Limited Service	
4	Prot / Perm Phases	
5	Overlap A - Green Omit	
6	Overlap B - Green Omit	
7	Overlap C - Green Omit	
8	Overlap D - Green Omit	
9	Overlap Yellow Flash	
A	EV-A Phases	_2__5___
B	EV-B Phases	___4____
C	EV-C Phases	1____6__
D	EV-D Phases	_____8
E	Extra 1 Config. Bits	1_345___
F	IC Select (Interconnect)	_2_____

Configuration

For access, set F + 9 + E = 1

E + E + ROW

Extra 1 Flags
1 = TBC Type 1
2 = NEMA Ext. Coord
3 = Auto Daylight Savings
4 = EV Advance
5 = Remote Download
6 = Special Event
7 = Pretimed Operation
8 = Split Ring Operation

IC Select Flags
1 =
2 = Modem
3 = 7-Wire Slave
4 = Flash / Free
5 =
6 = Simplex Master
7 = 7-Wire Master
8 = Offset Interrupter

Assign 5 Outputs
1 = Right Turn Overlap
2 = TOD Outputs
3 = EV Beacon - Steady
4 = EV Beacon - Flashing
5 = Special Event Outputs
6 = Phase 3 & 7 Ped
7 = Advanced Warning Sign
8 =

Time and Date

8-0 Hour, Minute, Day-of-Week
8-1 Day-of-Month, Year, Month
8-F Seconds

Disable Parity	0	D+B+0

Dial-Up Telephone Communications
(If set to a non-zero value, parity will be disabled)

Program Information

C + C + 0 = program
C + C + F = version

Remote Download

C + 0 + 4 = 1 -255
w/ E + E + E bit 5 on

Row	1 Delay	3 Carry-over
0		
1		1.8
2		
3		
4		
5		
6		
7		
8		
9		
A		
B		
C		
D		
E	---	---
F	---	---

Detector Name	332 Input File	Detector Number
	1I1	14
	2I2U	1
	2I2L	5
	2I3U	21
	2I3L	25
	2I4	9
	3I5	16
	4I6U	3
	4I6L	7
	4I7U	23
	4I7L	27
	4I8	11
	1I9U	18
	3I9L	20
---	---	---
---	---	---

Row	2 Delay	4 Carry-over
0		
1		1.8
2		
3		
4		
5		
6		
7		
8		
9		
A		
B		
C		
D		
E	---	---
F	---	---

Detector Name	332 Input File	Detector Number
	5J1	13
	6J2U	2
	6J2L	6
	6J3U	22
	6J3L	26
	6J4	10
	7J5	15
	8J6U	4
	8J6L	8
	8J7U	24
	8J7L	28
	8J8	12
	5J9U	17
	7J9L	19
---	---	---
---	---	---

Detector Delay & Carryover <D Page>

D + X (across) + ROW

Row	Detector Numbers	E
A	1 2 3 4 5 6 7 8	12345678
B	9 10 11 12 -- -- -- --	1234____
C	13 14 15 16 17 18 19 20	12345678
D	-- -- -- -- 21 22 23 24	____5678
E	-- -- -- -- -- -- -- --	1234____
F	-- 25 26 27 28 -- -- --	_2345___

Active Detectors <D Page>

Row		0 Detector #
0		
1	System Det. # 1	
2	System Det. # 2	
3	System Det. # 3	
4	System Det. # 4	
5	System Det. # 5	
6	System Det. # 6	
7	System Det. # 7	
8	System Det. # 8	

System Detectors <D Page>

Max ON (min)	5	D+A+E
Max OFF (min)	60	D+A+F

Detector Failure Monitor

Phase Number		F+C+1
Time Before Yellow		F+C+3

Advance Warning Beacon - Sign 1

Phase Number		F+D+1
Time Before Yellow		F+D+3

Advance Warning Beacon - Sign 2

Long Failure	0.5	F+0+6
Short Failure	0.5	F+0+7

Power Cycle Correction (Default = 0.5)

INTERSECTION: COMSTOCK @ LINDA VISTA

223 Program

Coordination Timing By: KH&A
Implemented On: 2/3/2010

Row	Column # --->	Plan 1	Plan 2	Plan 3	Plan 4	Plan 5	Plan 6	Plan 7	Plan 8	Plan 9
	Plan Name --->				AM	PM				
0	Cycle Length				90	110				
1	Phase 1 - ForceOff				54	55				
2	Phase 2 - ForceOff				0	0				
3	Phase 3 - ForceOff									
4	Phase 4 - ForceOff				40	38				
5	Phase 5 - ForceOff				55	55				
6	Phase 6 - ForceOff				0	0				
7	Phase 7 - ForceOff									
8	Phase 8 - ForceOff				40	38				
9	Ring Offset									
A	Offset A				55	85				
B	Offset B									
C	Offset C									
D	Permissive				9	11				
E	Hold Release				255	255				
F	Ped Shift				0	1				

Coordination <C Page>

C + Plan + ROW

FOR OBSERVATION ONLY

Master Plan	C + A + 2
Current Plan	C + A + 3
Next Plan	C + A + 4
T.O.D. Plan	C + A + 5
Master Cycle	C + A + 0
Ring A Cycle	C + B + 0
Ring B Cycle	C + D + 0
Min Cycle	C + A + E
Max Cycle	C + B + E

Row	Time	Plan	Offset	Day of Week
0	07 : 00	4	A	23456
1	09 : 00	E	A	23456
2	14 : 30	5	A	23456
3	17 : 00	E	A	1234567
4	:			
5	:			
6	:			
7	:			
8	:			
9	:			
A	:			
B	:			
C	:			
D	:			
E	:			
F	:			

TOD Coordination

<9 Key with C+0+9=1>

	E	Row		F
		0	Free Lag	2 4 6 8
Plan 1		1	Plan 1 - Lag	
Plan 2		2	Plan 2 - Lag	
Plan 3		3	Plan 3 - Lag	
Plan 4	2 6	4	Plan 4 - Lag	2 4 6 8
Plan 5	2 6	5	Plan 5 - Lag	2 4 6 8
Plan 6		6	Plan 6 - Lag	
Plan 7		7	Plan 7 - Lag	
Plan 8		8	Plan 8 - Lag	
Plan 9		9	Plan 9 - Lag	
Coord Ped*		A	Coord Max *	
NEMA Hold		B	Coord Lag *	
		C		
		D		
		E		
		F		

Sync Phases **Lag Phases** <C Page>

C + E + FUNCTION # C + F + FUNCTION #

Transition Type	0

TBC Transition
C + D + D

Plan Select
1 thru 9 = Coordination
Plan 1 thru 9
14 or E = Free
15 or F = Flash

Transition Type
0 = Shortway
Non-zero = Lengthen

INTERSECTION: FASHION VALLEY RD @ FRIARS RD

233 Program

Group Assignment:
Field Master Assignment:
System Reference Number:

N/S St FASHION VALLEY
E/W Str FRIARS

Last Database Change:

Timing sheets by: M2S
Approved by: FLG
Timing implemented on: 04/13/10

Row	Phase Numbers---->	1 (1+8)	2	3	4	5	6	7	8
		FRIARS	FASHION VALLEY			FRIARS	FASHION VALLEY		
0	Ped Walk		7				7		10
1	Ped FDW		14				7		25
2	Min Green	4	10			4	10		4
3	Type 3 Disconnect								
4	Added per Vehicle								
5	Veh Extension	2.0	2.9			2.0	3.7		2.2
6	Max Gap	2.0	2.9			2.0	3.7		2.2
7	Min Gap	2.0	0.2			2.0	0.2		0.2
8	Max Limit	30	60			30	60		50
9	Max Limit 2								
A	Adv. / Delay Walk								10
B	PE Min Ped FDW								
C	Cond Serv Check								
D	Reduce Every		1.1				0.8		1.5
E	Yellow Change	3.4	4.9			3.4	4.3		3.9
F	Red Clear	1.0	1.0			1.0	1.0		1.0

Phase Timing - Bank 1 <F/1+Phase+Row>

	E
RR-1 Delay	
RR-1 Clear	
EV-A Delay	0
EV-A Clear	0
EV-B Delay	
EV-B Clear	
EV-C Delay	0
EV-C Clear	0
EV-D Delay	0
EV-D Clear	0
RR-2 Delay	
RR-2 Clear	
View EV Delay	---
View EV Clear	---
View RR Delay	---
View RR Clear	---

Preempt Timing <F/1+E+Row>

Row		F
0	Permit	12 56 8
1	Red Lock	
2	Yellow Lock	
3	Min Recall	2 6
4	Ped Recall	
5	View Set Peds	2 6 8
6	Rest In Walk	
7	Red Rest	
8	Double Entry	
9	Max Recall	
A	Soft Recall	
B	Max 2	
C	Cond. Service	
D	Man Cntrl Calls	
E	Yellow Start	2 6
F	First Phases	8

Phase Functions <F/1+F+Row>

Current Calculated Cycle Length: C/0 + B + F

	9	A	B	C	D
	---	---	---	---	---
Phase 1					
Phase 2					
Phase 3					
Phase 4					
Phase 5					
Phase 6					
Phase 7					
Phase 8					
Max Initial					
Alternate Walk					
Alternate FDW					
Alternate Initial					
Alternate Extension					

Alternate Timing <F/1+Column+Phase>

Drop Number	1	<C/0+0+0>
Zone Number	1	<C/0+0+1>
Area Number	4	<C/0+0+2>
Area Address	81	<C/0+0+3>
QuicNet Channel	90	(QuicNet)

Communication Addresses

Flash Start	0	<F/1+0+E>
Red Revert	5.0	<F/1+0+F>
All Red Start	0.0	<F/1+C+0>

Start / Revert Times

Manual Plan
0 = Automatic
1-9 = Plan 1-9
14 = Free
15 = Flash

Manual Offset
0 = Automatic
1 = Offset A
2 = Offset B
3 = Offset C

(Outputs specified in Assignable Outputs at E/127+A+E & F)

Exclusive Walk	0	<F/1+0+0>
Exclusive FDW	0	<F/1+0+1>
All Red Clear	0.0	<F/1+0+2>

Exclusive Ped Phase

Manual Plan	0	<C/0+A+1>
Manual Offset	0	<C/0+B+1>

Manual Selection

Free Lag	2 6 8	<C/1+F+0>

How to Set Page Access Code:
F/1 -- C + 0 + F = 1

Notes:

INTERSECTION: FASHION VALLEY RD @ FRIARS RD

Row		Overlap 1	2	3	4	5	6	7	8
0	Load Switch Number	9							
1	Veh Set 1 - Phases	1							
2	Veh Set 2 - Phases								
3	Veh Set 3 - Phases								
4	Neg Veh Phases	2							
5	Neg Ped Phases								
6	Green Omit Phases								
7	Green Clear Omit Phs.								
8									
9									
A									
B									
C									
D	Green Clear								
E	Yellow Change	3.4							
F	Red Clear	1.0							

Overlap Assignments <E/29+Column+Row>

	F
Fast Green Flash Phase	
Green Flash Phases	
Flashing Walk Phases	
Guaranteed Passage	
Simultaneous Gap Term	12345678
Sequential Timing	
Advance Walk Phases	8
Delay Walk Phases	
External Recall	
Start-up Overlap Green	
Max Extension	
Inhibit Ped Reservice	
Semi-Actuated	
Start-up Overlap Yellow	
Start-up Vehicle Calls	12345678
Start-up Ped Calls	12345678

Specials <F/2+F+Row>

Row: 0, 1, 2, 3, 4, 5, 6, 7, 8, 9, A, B, C, D, E, F

Row		E
0	Exclusive Phases	
1	RR-1 Clear Phases	
2	RR-2 Clear Phases	
3	RR-2 Limited Service	
4	Prot / Perm Phases	
5	Flash to PE Circuits	
6	Flash Entry Phases	
7	Disable Yellow Range	
8	Disable Ovp Yel Range	
9	Overlap Yellow Flash	
A	EV-A Phases	2 5
B	EV-B Phases	
C	EV-C Phases	1 6
D	EV-D Phases	8
E	Extra 1 Config. Bits	1 345
F	IC Select (Interconnect)	2

Configuration <E/125+E+Row>

	F
Ext. Permit 1 Phases	
Ext. Permit 2 Phases	
Exclusive Ped Assign	
Preempt Non-Lock	12345678
Ped for 2P Output	2
Ped for 6P Output	6
Ped for 4P Output	
Ped for 8P Output	8
Yellow Flash Phases	
Low Priority A Phases	
Low Priority B Phases	
Low Priority C Phases	
Low Priority D Phases	
Restricted Phases	
Extra 2 Config. Bits	

Configuration <E/125+F+Row>

	C
EV-A	
EV-B	
EV-C	
EV-D	
RR-1 *	- - -
RR-2 *	- - -
SE-1	0
SE-2	0

<E/125+C+Row>

Preemption Priority

(* RR-1 is always Highest, and RR-2 is always Second Highest)

	2
Phase 1	0
Phase 2	0
Phase 3	0
Phase 4	0
Phase 5	0
Phase 6	0
Phase 7	0
Phase 8	0

<C/5+2+Row>

Coordination Transition Minimums

Row: 0, 1, 2, 3, 4, 5, 6, 7, 8, 9, A, B, C, D, E, F

Extra 1 Flags
1 = TBC Type 1
2 = NEMA Ext. Coord
3 = Auto Daylight Savings
4 = EV Advance
5 = Extended Status
6 = International Ped
7 = Flash - Clear Outputs
8 = Split Ring

IC Select Flags
1 =
2 = Modem
3 = 7-Wire Slave
4 = Flash / Free
5 =
6 = Simplex Master
7 = 7-Wire Master
8 = Offset Interrupter

Extra 2 Flags
1 = AWB During Initial
2 = LMU Installed
3 = Disable Min Walk
4 = QuicNet/4 System
5 = Ignore P/P on EV
6 =
7 = Reserved
8 =

Flash to PE & PE Non-Lock
1 = EV A 5 = RR 1
2 = EV B 6 = RR 2
3 = EV C 7 = SE 1
4 = EV D 8 = SE 2

8-0 Hour, Minute, Day-of-Week
8-1 Day-of-Month, Year, Month
8-F Seconds

Time and Date

Begin Month	3	<C/5+2+A>
Begin Week	2	<C/5+2+B>
End Month	11	<C/5+2+C>
End Week	1	<C/5+2+D>

Daylight Savings Time

Daylight Savings Date:
If set to all zeros, standard dates will be used.

INTERSECTION: FASHION VALLEY RD @ FRIARS RD

233 Program

Row	Detector Name	0 C1 Pin Number	1 Attributes	2 Phase(s)	3 Assign	1 Delay	3 Carry-Over
0	2I2U	39	45_7_	2	123 8		1.8
1	6J2U	40	45_7_	6	123 8		1.8
2		41	45_7_	4	123 8		
3	8J6U	42	45_7_	8	123 8		1.8
4		43	45_7_	2	123 8		
5		44	45_7_	6	123 8		
6		45	45_7_	4	123 8		
7		46	45_7_	8	123 8		
8		47	67_	2	123 8		
9		48	67_	6	123 8		
A		49	67_	4	123 8		
B		50	67_	8	123 8		
C		55	45_7_	5	123 8		
D		56	45_7_	1	123 8		
E		57	45_7_	7_	123 8		
F		58	45_7_	3	123 8		

Program Type:

Row	Detector Name	4 C1 Pin Number	5 Attributes	6 Phase(s)	7 Assign	2 Delay	4 Carry-Over
0		59	45_7_	5	123 8		
1		60	45_7_	1	123 8		
2		61	45_7_	7_	123 8		
3		62	45_7_	3	123 8		
4		63	45_7_	2	123 8		
5		64	45_7_	6	123 8		
6		65	45_7_	4	123 8		
7		66	45_7_	8	123 8		
8		67	2	2	123 8		
9		68	2	6	123 8		
A		69	2	4	123 8		
B		70	2	8	123 8		
C		76	45_7_	2	123 8		
D		77	45_7_	6	123 8		
E		78	45_7_	4	123 8		
F		79	45_7_	8	123 8		

Detector Assignments <E/126+Column+Row> <D/0+Column+Row>

Detector Attributes
1 = Full Time Delay
2 = Ped Call
3 =
4 = Count
5 = Extension
6 = Type 3
7 = Calling
8 = Alternate

Det. Assignments
1 = Det. Set 1
2 = Det. Set 2
3 = Det. Set 3
4 =
5 =
6 = Failure - Min Recall
7 = Failure - Max Recall
8 = Report on Failure

	Ped / Phase / Overlap 1	2	3	4	5	6	7	8	Row
Walk									0
Don't Walk									1
Phase Green									2
Phase Yellow									3
Phase Red									4
Overlap Green	35								5
Overlap Yellow	37								6
Overlap Red									7

Redirect Phase Outputs <E/127+Column+Row>

Cabinet Type	30

<E/125+D+0>

Enable Redirection
(Enable Redirection = 30)

Max OFF (minutes)	5	<D/0+0+1>
Max ON (minutes)	60	<D/0+0+2>

Detector Failure Monitor

	D	Row
		0
Output Port 1		1
Output Port 2		2
Output Port 3		3
Output Port 4		4
Output Port 5		5
Output Port 6		6
Output Port 7		7

Dimming <E/125+D+Row>

	D
Number of Digits	
1 st Digit	
2 ed Digit	
3 ed Digit	
4 th Digit	
5 th Digit	
6 th Digit	
7 th Digit	
8 th Digit	
9 th Digit	
10 th Digit	
11 th Digit	
12 th Digit	
13 th Digit	
14 th Digit	
15 th Digit	

<C/5+D+Row>

Dial-Back Telephone Number

Disable Alarms
1 = Stop Time
2 = Flash Sense
3 = Keyboard Entry
4 = Manual Plan
5 = Police Control
6 = External Alarm
7 = Detector Failure
8 =

	B	Row
DELAY-A	1	A
DELAY-B	1	B
DELAY-C	0	C
DELAY-D	0	D
DELAY-E	0	E
DELAY-F	0	F

<D/0+B+Row> (seconds)

Delay Logic Times

Omit Alarm	

<C/5+F+0>

Disable Alarm Reporting

Time	0	<C/5+C+0>

Redial Time (minutes)
(View Redial Timer at E/2+D+6)

INTERSECTION: FASHION VALLEY RD @ FRIARS RD

TOD Coordination <9/0.1+Row> (Bank 1)

Row	Time	Plan	Offset	Day of Week
0	07 : 00	7	A	_23456_
1	09 : 00	E	A	_23456_
2	15 : 00	8	A	_23456_
3	18 : 30	E	A	1234567
4				
5				
6				
7				
8				
9				
A				
B				
C				
D				
E				
F				

TOD Function <7/0.1+Row>

Time	Funct.	Day of Week

<E/27+4+Row>

Row	Column 4 Phases/Bits
0	
1	
2	
3	
4	
5	
6	
7	
8	
9	
A	
B	
C	
D	
E	
F	

Holiday Dates <8/1.1+Row> (Bank 1)

Day	Year	Month	Holiday Type

Holiday Events <9/1.1+Row> (Bank 1)

Time	Plan	Offset	Holiday Type

Row
0
1
2
3
4
5
6
7
8
9
A
B
C
D
E
F

T.O.D. Functions:
0 =
1 = Red Lock
2 = Yellow Lock
3 = Veh Min Recall
4 = Ped Recall
5 =
6 = Rest In Walk
7 = Red Rest
8 = Double Entry
9 = Veh Max Recall
A = Veh Soft Recall
B = Maximum 2
C = Conditional Service
D = Free Lag Phases
E = Bit 1 - Local Override
Bit 4 - Disable Detector OFF Monitor
Bit 7 - Detector Count Monitor
Bit 8 - Real Time Split Monitor
F = Output Bits 1 thru 8

Plan Select:
1 thru 9 = Coordination Plan 1 thru 9
14 or E = Free
15 or F = Flash

Month Select:
1 = January
2 = February
3 = March
4 = April
5 = May
6 = June
7 = July
8 = August
9 = September
A = October
B = November
C = December

Cycle Timer:
Master: C/0 + A + 0
Ring A: C/0 + B + 0
Ring B: C/0 + D + 0

Interval Timer:
Ring A: F/0 + A + Interval Row
Ring B: F/0 + B + Interval Row

Master Plan: C/0 + A + 2
Current Plan: C/0 + A + 3
TOD Plan: C/0 + A + 5

TOD Coordination <9/0.2+Row> (Bank 2)

Row	Time	Plan	Offset	Day of Week
0				
1				
2				
3				
4				
5				
6				
7				
8				
9				
A				
B				
C				
D				
E				
F				

Holiday TOD Function <7/0.2+Row>

Time	Funct.	Holiday Type

<E/28+Row>

Row	Column 4 Phases/Bits
0	
1	
2	
3	
4	
5	
6	
7	
8	
9	
A	
B	
C	
D	
E	
F	

Holiday Dates <8/1.2+Row> (Bank 2)

Day	Year	Month	Holiday Type

Holiday Events <9/1.2+Row> (Bank 2)

Time	Plan	Offset	Holiday Type

Row
0
1
2
3
4
5
6
7
8
9
A
B
C
D
E
F

INTERSECTION: FASHION VALLEY RD @ FRIARS RD

233 Program

Coord Extra
1 = Programmed WALK Time for Sync Phases
2 = Always Terminate Sync Phase Peds

Row	Plan Name ---->	Plan 1	Plan 2	Plan 3	Plan 4	Plan 5	Plan 6	Plan 7	Plan 8	Plan 9
								AM	PM	
0	Cycle Length							112	136	
1	Phase 1 - ForceOff							34	80	
2	Phase 2 - ForceOff							0	0	
3	Phase 3 - ForceOff									
4	Phase 4 - ForceOff									
5	Phase 5 - ForceOff							87	62	
6	Phase 6 - ForceOff							0	0	
7	Phase 7 - ForceOff									
8	Phase 8 - ForceOff							74	49	
9	Ring Offset									
A	Offset 1							82	40	
B	Offset 2									
C	Offset 3									
D	Perm 1 - End							11	14	
E	Hold Release							255	255	
F	Zone Offset							0	0	

Coordination - Timing Plans <C/1+Plan+Row>

Row		E
0		
1	Plan 1 - Sync	
2	Plan 2 - Sync	
3	Plan 3 - Sync	
4	Plan 4 - Sync	
5	Plan 5 - Sync	
6	Plan 6 - Sync	
7	Plan 7 - Sync	_2___6__
8	Plan 8 - Sync	_2___6__
9	Plan 9 - Sync	
A	NEMA Sync	
B	NEMA Hold	
C		
D		
E	Coord Extra	
F		

Sync Phases <C/1+E+Row>

Row		Plan 1	Plan 2	Plan 3	Plan 4	Plan 5	Plan 6	Plan 7	Plan 8	Plan 9
0	Ped Adjustment									
1	Perm 2 - Start									
2	Perm 2 - End									
3	Perm 3 - Start									
4	Perm 3 - End									
5	Reservice Time									
6	Reservice Phases									
7										
8	Pretimed Phases									
9	Max Recall									
A	Perm 1 Veh Phase									
B	Perm 1 Ped Phase									
C	Perm 2 Veh Phase									
D	Perm 2 Ped Phase									
E	Perm 3 Veh Phase									
F	Perm 3 Ped Phase									

Coordination - Parameters <C/2+Plan+Row>

Row		F
0	Free Lag	
1	Plan 1 - Lag	
2	Plan 2 - Lag	
3	Plan 3 - Lag	
4	Plan 4 - Lag	
5	Plan 5 - Lag	
6	Plan 6 - Lag	
7	Plan 7 - Lag	1____6_8
8	Plan 8 - Lag	_2___6_8
9	Plan 9 - Lag	
A	External Lag	
B		
C		
D		
E		
F		

Lag Phases <C/1+F+Row>

Coordination Timing By: KH&A
Implemented on: 2/17/2010

INTERSECTION: FASHION VALLEY RD @ FRIARS RD

Row	Column 9		Column A		Column B		Column C		Column D		Column E		Column F		Row
0	Spec. Funct. 1		NOT-3		Max 2		Pretimed		Set Monday		Dial 2 (7-Wire)		Sim Term		0
1	Spec. Funct. 2		NOT-4		System Det 1		Plan 1		Ext. Perm 1		Dial 3 (7-Wire)		EV-A	71	1
2	Spec. Funct. 3		OR-4 (a)		System Det 2		Plan 2		Ext. Perm 2		Offset 1 (7-Wire)		EV-B	72	2
3	Spec. Funct. 4		OR-4 (b)		System Det 3		Plan 3		Dimming		Offset 2 (7-Wire)		EV-C	73	3
4	NAND-3 (a)		OR-5 (a)		System Det 4		Plan 4		Set Clock		Offset 3 (7-Wire)		EV-D	74	4
5	NAND-3 (b)		OR-5 (b)		System Det 5		Plan 5		Stop Time	82	Free (7-Wire)		RR-1	51	5
6	NAND-4 (a)		OR-6 (a)		System Det 6		Plan 6		Flash Sense	81	Flash (7-Wire)		RR-2	52	6
7	NAND-4 (b)		OR-6 (b)		System Det 7		Plan 7		Manual Enable		Excl. Ped Omit		Spec. Event 1		7
8	OR-7 (a)		Fig 3 Diamond		System Det 8		Plan 8		Man. Advance		NOT-1		Spec. Event 2		8
9	OR-7 (b)		Fig 4 Diamond		Max Inhibit (nema)		Plan 9		External Alarm		NOT-2		External Lag		9
A	OR-7 (c)		AND-4 (a)		Force A (nema)		DELAY-A		Phase Bank 2		OR-1 (a)		AND-1 (a)		A
B	OR-7 (d)		AND-4 (b)		Force B (nema)		DELAY-B		Phase Bank 3		OR-1 (b)		AND-1 (b)		B
C	OR-8 (a)		NAND-1 (a)		C.N.A. (nema)		DELAY-C		Overlap Set 2		OR-2 (a)		AND-2 (a)		C
D	OR-8 (b)		NAND-1 (b)		Hold (nema)		DELAY-D		Overlap Set 3		OR-2 (b)		AND-2 (b)		D
E	OR-8 (c)		NAND-2 (a)		Max Recall		DELAY-E		Detector Set 2		OR-3 (a)		AND-3 (a)		E
F	OR-8 (d)		NAND-2 (b)		Min Recall		DELAY-F		Detector Set 3		OR-3 (b)		AND-3 (b)		F

Assignable Inputs <E/126+Column+Row>

Row	Column 9		Column A		Column B		Column C		Column D		Column E		Column F		Row
0	Phase ON - 1		Preempt Fail		Flasher 0		Free		NOT-1		TOD Out 1		Dial 2 (7-Wire)		0
1	Phase ON - 2		Sp Evnt Out 1		Flasher 1		Plan 1		OR-1		TOD Out 2		Dial 3 (7-Wire)		1
2	Phase ON - 3		Sp Evnt Out 2		Fast Flasher		Plan 2		OR-2		TOD Out 3		Offset 1 (7-Wire)		2
3	Phase ON - 4		Sp Evnt Out 3		Fig 3 Diamond		Plan 3		OR-3		TOD Out 4		Offset 2 (7-Wire)		3
4	Phase ON - 5		Sp Evnt Out 4		Fig 4 Diamond		Plan 4		AND-1		TOD Out 5		Offset 3 (7-Wire)		4
5	Phase ON - 6		Sp Evnt Out 5				Plan 5		AND-2		TOD Out 6		Free (7-Wire)		5
6	Phase ON - 7		Sp Evnt Out 6				Plan 6		AND-3		TOD Out 7		Flash (7-Wire)	81	6
7	Phase ON - 8		Sp Evnt Out 7				Plan 7		NOT-2		TOD Out 8		Preempt		7
8	Ph. Check - 1		Sp Evnt Out 8		NOT-3		Plan 8		EV-A		Adv. Warn - 1		Low Priority A		8
9	Ph. Check - 2				NOT-4		Plan 9		EV-B		Adv. Warn - 2		Low Priority B		9
A	Ph. Check - 3		Detector Fail		OR-4		Spec. Funct. 3		EV-C		DELAY-A		Low Priority C		A
B	Ph. Check - 4		Spec. Funct. 1		OR-5		Spec. Funct. 4		EV-D		DELAY-B		Low Priority D		B
C	Ph. Check - 5		Spec. Funct. 2		OR-6		NAND-3		RR-1		DELAY-C				C
D	Ph. Check - 6		Central Control		AND-4		NAND-4		RR-2		DELAY-D				D
E	Ph. Check - 7		Excl. Ped DW		NAND-1		OR-7		Spec. Event 1		DELAY-E				E
F	Ph. Check - 8		Excl. Ped WK		NAND-2		OR-8		Spec. Event 2		DELAY-F				F

Assignable Outputs <E/127+Column+Row>

INTERSECTION: FASHION VALLEY RD @ FRIARS RD

233 Program

Row		Phase 1	2	3	4	5	6	7	8
0	Ped Walk								
1	Ped FDW								
2	Min Green								
3	Type 3 Disconnect								
4	Added per Vehicle								
5	Veh Extension								
6	Max Gap								
7	Min Gap								
8	Max Limit								
9	Max Limit 2								
A	Adv. / Delay Walk								
B	PE Min Ped FDW								
C	Cond Serv Check								
D	Reduce Every								
E	Yellow Change								
F	Red Clear								

Phase Timing - Bank 2 <C+0+F=2>

	9	A	B	C	D
	---	---	---	---	---
Phase 1					
Phase 2					
Phase 3					
Phase 4					
Phase 5					
Phase 6					
Phase 7					
Phase 8					
Max Initial					
Alternate Walk					
Alternate FDW					
Alternate Initial					
Alternate Extension					

Alternate Timing

Transition Type
0.X = Shortway
1.X = Lengthen
X.1 thru X.4 = Number of cycles when lengthing

Transition Type	0.3	<C/5+1+9>

TBC Transition

Lag Hold Phases		<C/5+1+A>

Coordinated Lag Hold Phases

Sync Output Time	0.0	<C/5+1+C>

7-Wire Master

Time B4 Yellow	0.0	<F/1+C+E>
Phase Number	0	<F/1+C+F>

Advance Warning Beacon - Sign 1

Time B4 Yellow	0.0	<F/1+D+E>
Phase Number	0	<F/1+D+F>

Advance Warning Beacon - Sign 2

Row		1	2	3	4	5	6	7	8
0	Ped Walk								
1	Ped FDW								
2	Min Green								
3	Type 3 Disconnect								
4	Added per Vehicle								
5	Veh Extension								
6	Max Gap								
7	Min Gap								
8	Max Limit								
9	Max Limit 2								
A	Adv. / Delay Walk								
B	PE Min Ped FDW								
C	Cond Serv Check								
D	Reduce Every								
E	Yellow Change								
F	Red Clear								

Phase Timing - Bank 3 <C+0+F=3>

	9	A	B	C	D
	---	---	---	---	---
Phase 1					
Phase 2					
Phase 3					
Phase 4					
Phase 5					
Phase 6					
Phase 7					
Phase 8					
Max Initial					
Alternate Walk					
Alternate FDW					
Alternate Initial					
Alternate Extension					

Alternate Timing

Long Failure	0.5	<F/1+0+6>
Short Failure	0.5	<F/1+0+7>

Power Cycle Correction (Default = 0.7)

Min Time (seconds)	0	<F/1+0+8>

Min Green Before PE Force Off

Max Time (minutes)	0	<F/1+0+9>

Max Preempt Time Before Failure

Min Time (seconds)	0	<F/1+0+A>

Min Time Between Same Preempts
(Does Not Apply To Railroad Preempt)

Low Priority
1 = Channel A
2 = Channel B
3 = Channel C
4 = Channel D

Low Pri. Channel		<E/125+C+8>

Disable Low Priority Channel

INTERSECTION: FASHION VALLEY RD @ FRIARS RD

Row	6 Clear	7 Time	8 Ped Call	9 Hold	A Advance	B Force Off	C Vehicle Call	D Permit Phases	E Ped Omit	F Output
0		0								
1		0								
2		0								
3		0								
4		0								
5		0								
6		0								
7		0								
8		0								
9		0								
A		0								
B		0								
C		0								
D		0								
E		0								
F		0								

Special Event Schedule -- Table 1 <C+0+E=27>

Notes:

0 <E/27+5+F>
Limited Service Interval

Row	6 Clear	7 Time	8 Ped Call	9 Hold	A Advance	B Force Off	C Vehicle Call	D Permit Phases	E Ped Omit	F Output
0		0								
1		0								
2		0								
3		0								
4		0								
5		0								
6		0								
7		0								
8		0								
9		0								
A		0								
B		0								
C		0								
D		0								
E		0								
F		0								

Special Event Schedule -- Table 2 <C+0+E=28>

Notes:

0 <E/28+5+F>
Limited Service Interval

INTERSECTION: AVENIDA DE LAS TIENDAS @ FRIARS RD

233 Program

Group Assignment:
Field Master Assignment:
System Reference Number:

N/S Street: AVENIDA DE LAS TIENDAS
E/W Street: FRIARS

Last Database Change:

Timing sheets by: M2S
Approved by: FLG
Timing implemented on: 04/13/10

Row	Phase Numbers--->	1	2	3	4	5	6	7	8
		FRIARS	AVE DE LAS TIENDAS				FRIARS		AVE DE LAS TIENDAS
								Dummy	
0	Ped Walk		7		5		7		
1	Ped FDW		18		25		9		
2	Min Green	4	10		4	4	10	4	4
3	Type 3 Disconnect								
4	Added per Vehicle								
5	Veh Extension	2.0	3.6		2.0	2.0	3.7	2.0	2.0
6	Max Gap	2.0	3.6		2.0	2.0	3.7	2.0	2.0
7	Min Gap	2.0	0.2		2.0	2.0	0.2	2.0	2.0
8	Max Limit	25	60		30	30	60	25	30
9	Max Limit 2								
A	Adv. / Delay Walk								
B	PE Min Ped FDW								
C	Cond Serv Check								
D	Reduce Every		0.9				0.8		
E	Yellow Change	3.4	4.4		3.9	3.4	4.3	3.4	3.9
F	Red Clear	1.0	1.0		1.0	1.0	1.0	1.0	1.0

Phase Timing - Bank 1 <F/1+Phase+Row>

	E
RR-1 Delay	
RR-1 Clear	
EV-A Delay	0
EV-A Clear	0
EV-B Delay	0
EV-B Clear	0
EV-C Delay	0
EV-C Clear	0
EV-D Delay	0
EV-D Clear	0
RR-2 Delay	
RR-2 Clear	
View EV Delay	- - -
View EV Clear	- - -
View RR Delay	- - -
View RR Clear	- - -

Preempt Timing <F/1+E+Row>

	F	Row
Permit	12_456_8	0
Red Lock		1
Yellow Lock		2
Min Recall	_2__6__	3
Ped Recall		4
View Set Peds	_2_4_6__	5
Rest In Walk		6
Red Rest		7
Double Entry	__4__8	8
Max Recall		9
Soft Recall		A
Max 2		B
Cond. Service		C
Man Cntrl Calls		D
Yellow Start	__4__8	E
First Phases	1__6__	F

Phase Functions <F/1+F+Row>

Current Calculated Cycle Length: C/0 + B + F

	9	A	B	C	D
	---	---	---	---	---
Phase 1					
Phase 2					
Phase 3					
Phase 4					
Phase 5					
Phase 6					
Phase 7					
Phase 8					
Max Initial					
Alternate Walk					
Alternate FDW					
Alternate Initial					
Alternate Extension					

Alternate Timing <F/1+Column+Phase>

Drop Number	3	<C/0+0+0>
Zone Number	3	<C/0+0+1>
Area Number	4	<C/0+0+2>
Area Address	83	<C/0+0+3>
QuicNet Channel	90	(QuicNet)

Communication Addresses

Manual Plan
0 = Automatic
1-9 = Plan 1-9
14 = Free
15 = Flash

(Outputs specified in Assignable Outputs at E/127+A+E & F)

Exclusive Walk	0	<F/1+0+0>
Exclusive FDW	0	<F/1+0+1>
All Red Clear	0.0	<F/1+0+2>

Exclusive Ped Phase

Flash Start	0	<F/1+0+E>
Red Revert	5.0	<F/1+0+F>
All Red Start	0.0	<F/1+C+0>

Start / Revert Times

Manual Offset
0 = Automatic
1 = Offset A
2 = Offset B
3 = Offset C

Manual Plan	0	<C/0+A+1>
Manual Offset	0	<C/0+B+1>

Manual Selection

Free Lag	_2_4_6_8	<C/1+F+0>

How to Set Page Access Code:
F/1 -- C + 0 + F = 1

Notes: Yellow Start Must be phases 4 & 8.
Phase 7 is permitted only during plan 8. Phase 7 must be flagged as Exclusive.
Phase 7 must be flagged at E+2+D (Detector Timing).

INTERSECTION: AVENIDA DE LAS TIENDAS @ FRIARS RD

Row		Overlap 1	2	3	4	5	6	7	8
0	Load Switch Number	1	6						
1	Veh Set 1 - Phases	1____7_	____67_						
2	Veh Set 2 - Phases								
3	Veh Set 3 - Phases								
4	Neg Veh Phases	_2_4__8	___45__8						
5	Neg Ped Phases								
6	Green Omit Phases								
7	Green Clear Omit Phs.								
8									
9									
A									
B									
C									
D	Green Clear								
E	Yellow Change	3.4	4.3						
F	Red Clear	1.0	1.0						

Overlap Assignments <E/29+Column+Row>

Row		F
0	Fast Green Flash Phase	
1	Green Flash Phases	
2	Flashing Walk Phases	
3	Guaranteed Passage	
4	Simultaneous Gap Term	12345678
5	Sequential Timing	
6	Advance Walk Phases	
7	Delay Walk Phases	
8	External Recall	
9	Start-up Overlap Green	
A	Max Extension	
B	Inhibit Ped Reservice	
C	Semi-Actuated	
D	Start-up Overlap Yellow	
E	Start-up Vehicle Calls	12345678
F	Start-up Ped Calls	12345678

Specials <F/2+F+Row>

Row		E
0	Exclusive Phases	_____7_
1	RR-1 Clear Phases	
2	RR-2 Clear Phases	
3	RR-2 Limited Service	
4	Prot / Perm Phases	
5	Flash to PE Circuits	
6	Flash Entry Phases	
7	Disable Yellow Range	
8	Disable Ovp Yel Range	
9	Overlap Yellow Flash	
A	EV-A Phases	_2__5___
B	EV-B Phases	___4____
C	EV-C Phases	1____6__
D	EV-D Phases	_____8
E	Extra 1 Config. Bits	1_345___
F	IC Select (Interconnect)	_2_____

Configuration <E/125+E+Row>

	F
Ext. Permit 1 Phases	12_45678
Ext. Permit 2 Phases	
Exclusive Ped Assign	
Preempt Non-Lock	12345678
Ped for 2P Output	_2_____
Ped for 6P Output	_____6__
Ped for 4P Output	___4____
Ped for 8P Output	
Yellow Flash Phases	
Low Priority A Phases	
Low Priority B Phases	
Low Priority C Phases	
Low Priority D Phases	
Restricted Phases	
Extra 2 Config. Bits	

Configuration <E/125+F+Row>

	C
EV-A	
EV-B	
EV-C	
EV-D	
RR-1 *	---
RR-2 *	---
SE-1	0
SE-2	0

<E/125+C+Row>

Preemption Priority

(* RR-1 is always Highest, and RR-2 is always Second Highest)

	2
Phase 1	0
Phase 2	0
Phase 3	0
Phase 4	0
Phase 5	0
Phase 6	0
Phase 7	0
Phase 8	0

<C/5+2+Row>

Coordination Transition Minimums

Row: 0 1 2 3 4 5 6 7 8 9 A B C D E F

Extra 1 Flags
1 = TBC Type 1
2 = NEMA Ext. Coord
3 = Auto Daylight Savings
4 = EV Advance
5 = Extended Status
6 = International Ped
7 = Flash - Clear Outputs
8 = Split Ring

IC Select Flags
1 =
2 = Modem
3 = 7-Wire Slave
4 = Flash / Free
5 =
6 = Simplex Master
7 = 7-Wire Master
8 = Offset Interrupter

Extra 2 Flags
1 = AWB During Initial
2 = LMU Installed
3 = Disable Min Walk
4 = QuicNet/4 System
5 = Ignore P/P on EV
6 =
7 = Reserved
8 =

Flash to PE & PE Non-Lock
1 = EV A 5 = RR 1
2 = EV B 6 = RR 2
3 = EV C 7 = SE 1
4 = EV D 8 = SE 2

8-0 Hour, Minute, Day-of-Week
8-1 Day-of-Month, Year, Month
8-F Seconds

Time and Date

Begin Month	3	<C/5+2+A>
Begin Week	2	<C/5+2+B>
End Month	11	<C/5+2+C>
End Week	1	<C/5+2+D>

Daylight Savings Time

Daylight Savings Date:
If set to all zeros, standard date will be used.

INTERSECTION: AVENIDA DE LAS TIENDAS @ FRIARS RD

233 Program

Row	Detector Name	0 C1 Pin Number	1 Attributes	2 Phase(s)	3 Assign	1 Delay	3 Carry-Over
0	2I2U	39	45_7_	_2_____	123____8		1.8
1	6J2U	40	45_7_	_____6__	123____8		1.8
2		41	45_7_	___4____	123____8		
3		42	45_7_	_____8	123____8		
4	2I2L	43	45_7_	_2_____	123____8		1.8
5	6J2L	44	45_7_	_____6__	123____8		1.8
6		45	45_7_	___4____	123____8		
7		46	45_7_	_____8	123____8		
8		47	67_	_2_____	123____8		
9		48	67_	_____6__	123____8		
A		49	67_	___4____	123____8		
B		50	67_	_____8	123____8		
C		55	45_7_	_____5___	123____8		
D		56	45_7_	1_____7_	123____8		
E		57	45_7_	_____7_	123____8		
F		58	45_7_	__3_____	123____8		

Program Type:

	Ped / Phase / Overlap 1	2	3	4	5	6	7	8	Row
Walk									0
Don't Walk									1
Phase Green									2
Phase Yellow									3
Phase Red									4
Overlap Green									5
Overlap Yellow									6
Overlap Red									7

Redirect Phase Outputs <E/127+Column+Row>

Cabinet Type	30

<E/125+D+0>

Enable Redirection
(Enable Redirection = 30)

Max OFF (minutes)	5	<D/0+0+1>
Max ON (minutes)	60	<D/0+0+2>

Detector Failure Monitor

	D	Row
		0
Output Port 1		1
Output Port 2		2
Output Port 3		3
Output Port 4		4
Output Port 5		5
Output Port 6		6
Output Port 7		7

Dimming <E/125+D+Row>

Row	Detector Name	4 C1 Pin Number	5 Attributes	6 Phase(s)	7 Assign	2 Delay	4 Carry-Over
0		59	45_7_	_____5___	123____8		
1		60	45_7_	1_____	123____8		
2		61	45_7_	_____7_	123____8		
3		62	45_7_	__3_____	123____8		
4		63	45_7_	_2_____	123____8		
5		64	45_7_	_____6__	123____8		
6		65	45_7_	___4____	123____8		
7		66	45_7_	_____8	123____8		
8		67	_2_____	_2_____	123____8		
9		68	_2_____	_____6__	123____8		
A		69	_2_____	___4____	123____8		
B		70	_2_____	_____8	123____8		
C		76	45_7_	_2_____	123____8		
D		77	45_7_	_____6__	123____8		
E		78	45_7_	___4____	123____8		
F		79	45_7_	_____8	123____8		

Detector Assignments <E/126+Column+Row> <D/0+Column+Row>

Detector Attributes
1 = Full Time Delay
2 = Ped Call
3 =
4 = Count
5 = Extension
6 = Type 3
7 = Calling
8 = Alternate

Det. Assignments
1 = Det. Set 1
2 = Det. Set 2
3 = Det. Set 3
4 =
5 =
6 = Failure - Min Recall
7 = Failure - Max Recall
8 = Report on Failure

	D
Number of Digits	
1 st Digit	
2 ed Digit	
3 ed Digit	
4 th Digit	
5 th Digit	
6 th Digit	
7 th Digit	
8 th Digit	
9 th Digit	
10 th Digit	
11 th Digit	
12 th Digit	
13 th Digit	
14 th Digit	
15 th Digit	

<C/5+D+Row>

Dial-Back Telephone Number

Disable Alarms
1 = Stop Time
2 = Flash Sense
3 = Keyboard Entry
4 = Manual Plan
5 = Police Control
6 = External Alarm
7 = Detector Failure
8 =

	B	Row
DELAY-A	1	A
DELAY-B	1	B
DELAY-C	0	C
DELAY-D	0	D
DELAY-E	0	E
DELAY-F	0	F

<D/0+B+Row> (seconds)

Delay Logic Times

Omit Alarm	#NAME?

<C/5+F+0>

Disable Alarm Reporting

Time	0	<C/5+C+0>

Redial Time (minutes)
(View Redial Timer at E/2+D+6)

INTERSECTION: AVENIDA DE LAS TIENDAS @ FRIARS RD

TOD Coordination <9/0.1+Row> (Bank 1)

Row	Time	Plan	Offset	Day of Week
0	07 : 00	7	A	_23456_
1	09 : 00	E	A	_23456_
2	15 : 00	8	A	_23456_
3	18 : 30	E	A	1234567
4				
5				
6				
7				
8				
9				
A				
B				
C				
D				
E				
F				

TOD Function <7/0.1+Row> <E/27+4+Row>

Time	Funct.	Day of Week	Column 4 Phases/Bits

Holiday Dates <8/1.1+Row> (Bank 1)

Row	Day	Year	Month	Holiday Type
0				
1				
2				
3				
4				
5				
6				
7				
8				
9				
A				
B				
C				
D				
E				
F				

Holiday Events <9/1.1+Row> (Bank 1)

Time	Plan	Offset	Holiday Type	Row
				0
				1
				2
				3
				4
				5
				6
				7
				8
				9
				A
				B
				C
				D
				E
				F

T.O.D. Functions:
0 =
1 = Red Lock
2 = Yellow Lock
3 = Veh Min Recall
4 = Ped Recall
5 =
6 = Rest In Walk
7 = Red Rest
8 = Double Entry
9 = Veh Max Recall
A = Veh Soft Recall
B = Maximum 2
C = Conditional Service
D = Free Lag Phases
E = Bit 1 - Local Override
Bit 4 - Disable Detector OFF Monitor
Bit 7 - Detector Count Monitor
Bit 8 - Real Time Split Monitor
F = Output Bits 1 thru 8

Plan Select:
1 thru 9 = Coordination Plan 1 thru 9
14 or E = Free
15 or F = Flash

Month Select:
1 = January
2 = February
3 = March
4 = April
5 = May
6 = June
7 = July
8 = August
9 = September
A = October
B = November
C = December

Cycle Timer:
Master: C/0 + A + 0
Ring A: C/0 + B + 0
Ring B: C/0 + D + 0

Interval Timer:
Ring A: F/0 + A + Interval Row
Ring B: F/0 + B + Interval Row

Master Plan: C/0 + A + 2
Current Plan: C/0 + A + 3
TOD Plan: C/0 + A + 5

TOD Coordination <9/0.2+Row> (Bank 2)

Row	Time	Plan	Offset	Day of Week
0				
1				
2				
3				
4				
5				
6				
7				
8				
9				
A				
B				
C				
D				
E				
F				

Holiday TOD Function <7/0.2+Row> <E/28+Row>

Time	Funct.	Holiday Type	Column 4 Phases/Bits

Holiday Dates <8/1.2+Row> (Bank 2)

Row	Day	Year	Month	Holiday Type
0				
1				
2				
3				
4				
5				
6				
7				
8				
9				
A				
B				
C				
D				
E				
F				

Holiday Events <9/1.2+Row> (Bank 2)

Time	Plan	Offset	Holiday Type	Row
				0
				1
				2
				3
				4
				5
				6
				7
				8
				9
				A
				B
				C
				D
				E
				F

INTERSECTION: AVENIDA DE LAS TIENDAS @ FRIARS RD

233 Program

Row	Plan Name --->	Plan 1	Plan 2	Plan 3	Plan 4	Plan 5	Plan 6	Plan 7 AM	Plan 8 PM	Plan 9
0	Cycle Length							112	136	
1	Phase 1 - ForceOff							55	78	
2	Phase 2 - ForceOff							0	0	
3	Phase 3 - ForceOff							.	.	
4	Phase 4 - ForceOff							38	58	
5	Phase 5 - ForceOff							51	70	
6	Phase 6 - ForceOff							0	0	
7	Phase 7 - ForceOff								27	
8	Phase 8 - ForceOff							38	58	
9	Ring Offset									
A	Offset 1							90	71	
B	Offset 2									
C	Offset 3									
D	Perm 1 - End							11	14	
E	Hold Release							255	255	
F	Zone Offset							0	0	

Coordination - Timing Plans <C/1+Plan+Row>

Coord Extra
1 = Programmed WALK Time for Sync Phases
2 = Always Terminate Sync Phase Peds

Row		E
0		
1	Plan 1 - Sync	
2	Plan 2 - Sync	
3	Plan 3 - Sync	
4	Plan 4 - Sync	
5	Plan 5 - Sync	
6	Plan 6 - Sync	
7	Plan 7 - Sync	_2__6__
8	Plan 8 - Sync	_2__6__
9	Plan 9 - Sync	
A	NEMA Sync	
B	NEMA Hold	
C		
D		
E	Coord Extra	
F		

Sync Phases <C/1+E+Row>

Row		Plan 1	Plan 2	Plan 3	Plan 4	Plan 5	Plan 6	Plan 7	Plan 8	Plan 9
0	Ped Adjustment									
1	Perm 2 - Start								10	
2	Perm 2 - End								40	
3	Perm 3 - Start								40	
4	Perm 3 - End								55	
5	Reservice Time								0	
6	Reservice Phases									
7										
8	Pretimed Phases									
9	Max Recall									
A	Perm 1 Veh Phase								_____7_	
B	Perm 1 Ped Phase									
C	Perm 2 Veh Phase								__4__8	
D	Perm 2 Ped Phase									
E	Perm 3 Veh Phase								1__5___	
F	Perm 3 Ped Phase									

Coordination - Parameters <C/2+Plan+Row>

Row		F
0	Free Lag	
1	Plan 1 - Lag	
2	Plan 2 - Lag	
3	Plan 3 - Lag	
4	Plan 4 - Lag	
5	Plan 5 - Lag	
6	Plan 6 - Lag	
7	Plan 7 - Lag	_2_4_6_8
8	Plan 8 - Lag	_2_4_6_8
9	Plan 9 - Lag	
A	External Lag	
B		
C		
D		
E		
F		

Lag Phases <C/1+F+Row>

Coordination Timing By: KH&A
Implemented on: 2/17/2010

INTERSECTION: AVENIDA DE LAS TIENDAS @ FRIARS RD

Row	Column 9		Column A		Column B		Column C		Column D		Column E		Column F		Row
0	Spec. Funct. 1		NOT-3		Max 2		Pretimed		Set Monday		Dial 2 (7-Wire)		Sim Term		0
1	Spec. Funct. 2		NOT-4		System Det 1		Plan 1		Ext. Perm 1	210	Dial 3 (7-Wire)		EV-A	71	1
2	Spec. Funct. 3		OR-4 (a)		System Det 2		Plan 2		Ext. Perm 2		Offset 1 (7-Wire)		EV-B	72	2
3	Spec. Funct. 4		OR-4 (b)		System Det 3		Plan 3		Dimming		Offset 2 (7-Wire)		EV-C	73	3
4	NAND-3 (a)		OR-5 (a)		System Det 4		Plan 4		Set Clock		Offset 3 (7-Wire)		EV-D	74	4
5	NAND-3 (b)		OR-5 (b)		System Det 5		Plan 5		Stop Time	82	Free (7-Wire)		RR-1	51	5
6	NAND-4 (a)		OR-6 (a)		System Det 6		Plan 6		Flash Sense	81	Flash (7-Wire)		RR-2	52	6
7	NAND-4 (b)		OR-6 (b)		System Det 7		Plan 7		Manual Enable		Excl. Ped Omit		Spec. Event 1		7
8	OR-7 (a)		Fig 3 Diamond		System Det 8		Plan 8		Man. Advance		NOT-1		Spec. Event 2		8
9	OR-7 (b)		Fig 4 Diamond		Max Inhibit (nema)		Plan 9		External Alarm		NOT-2		External Lag		9
A	OR-7 (c)		AND-4 (a)		Force A (nema)		DELAY-A		Phase Bank 2		OR-1 (a)		AND-1 (a)		A
B	OR-7 (d)		AND-4 (b)		Force B (nema)		DELAY-B		Phase Bank 3		OR-1 (b)		AND-1 (b)		B
C	OR-8 (a)		NAND-1 (a)		C.N.A. (nema)		DELAY-C		Overlap Set 2		OR-2 (a)	203	AND-2 (a)		C
D	OR-8 (b)		NAND-1 (b)		Hold (nema)		DELAY-D		Overlap Set 3		OR-2 (b)	0	AND-2 (b)		D
E	OR-8 (c)		NAND-2 (a)		Max Recall		DELAY-E		Detector Set 2		OR-3 (a)		AND-3 (a)		E
F	OR-8 (d)		NAND-2 (b)		Min Recall		DELAY-F		Detector Set 3		OR-3 (b)		AND-3 (b)		F

Assignable Inputs <E/126+Column+Row>

Row	Column 9		Column A		Column B		Column C		Column D		Column E		Column F		Row
0	Phase ON - 1		Preempt Fail		Flasher 0		Free		NOT-1		TOD Out 1		Dial 2 (7-Wire)		0
1	Phase ON - 2		Sp Evnt Out 1		Flasher 1		Plan 1		OR-1		TOD Out 2		Dial 3 (7-Wire)		1
2	Phase ON - 3		Sp Evnt Out 2		Fast Flasher		Plan 2		OR-2	210	TOD Out 3		Offset 1 (7-Wire)		2
3	Phase ON - 4		Sp Evnt Out 3		Fig 3 Diamond		Plan 3		OR-3		TOD Out 4		Offset 2 (7-Wire)		3
4	Phase ON - 5		Sp Evnt Out 4		Fig 4 Diamond		Plan 4		AND-1		TOD Out 5		Offset 3 (7-Wire)		4
5	Phase ON - 6		Sp Evnt Out 5				Plan 5		AND-2		TOD Out 6		Free (7-Wire)		5
6	Phase ON - 7		Sp Evnt Out 6				Plan 6		AND-3		TOD Out 7		Flash (7-Wire)		6
7	Phase ON - 8		Sp Evnt Out 7				Plan 7		NOT-2		TOD Out 8		Preempt		7
8	Ph. Check - 1		Sp Evnt Out 8		NOT-3		Plan 8	203	EV-A		Adv. Warn - 1		Low Priority A		8
9	Ph. Check - 2				NOT-4		Plan 9		EV-B		Adv. Warn - 2		Low Priority B		9
A	Ph. Check - 3		Detector Fail		OR-4		Spec. Funct. 3		EV-C		DELAY-A		Low Priority C		A
B	Ph. Check - 4		Spec. Funct. 1		OR-5		Spec. Funct. 4		EV-D		DELAY-B		Low Priority D		B
C	Ph. Check - 5		Spec. Funct. 2		OR-6		NAND-3		RR-1		DELAY-C				C
D	Ph. Check - 6		Central Control		AND-4		NAND-4		RR-2		DELAY-D				D
E	Ph. Check - 7		Excl. Ped DW		NAND-1		OR-7		Spec. Event 1		DELAY-E				E
F	Ph. Check - 8		Excl. Ped WK		NAND-2		OR-8		Spec. Event 2		DELAY-F				F

Assignable Outputs <E/127+Column+Row>

INTERSECTION: AVENIDA DE LAS TIENDAS @ FRIARS RD

233 Program

Row		Phase 1	2	3	4	5	6	7	8
0	Ped Walk								
1	Ped FDW								
2	Min Green								
3	Type 3 Disconnect								
4	Added per Vehicle								
5	Veh Extension								
6	Max Gap								
7	Min Gap								
8	Max Limit								
9	Max Limit 2								
A	Adv. / Delay Walk								
B	PE Min Ped FDW								
C	Cond Serv Check								
D	Reduce Every								
E	Yellow Change								
F	Red Clear								

Phase Timing - Bank 2 <C+0+F=2>

	9	A	B	C	D
	---	---	---	---	---
Phase 1					
Phase 2					
Phase 3					
Phase 4					
Phase 5					
Phase 6					
Phase 7					
Phase 8					
Max Initial					
Alternate Walk					
Alternate FDW					
Alternate Initial					
Alternate Extension					

Alternate Timing

Transition Type
0.X = Shortway
1.X = Lengthen
X.1 thru X.4 = Number of cycles when lengthing

Transition Type	0.3	<C/5+1+9>

TBC Transition

Lag Hold Phases		<C/5+1+A>

Coordinated Lag Hold Phases

Sync Output Time	0.0	<C/5+1+C>

7-Wire Master

Time B4 Yellow	0.0	<F/1+C+E>
Phase Number	0	<F/1+C+F>

Advance Warning Beacon - Sign 1

Time B4 Yellow	0.0	<F/1+D+E>
Phase Number	0	<F/1+D+F>

Advance Warning Beacon - Sign 2

Row		1	2	3	4	5	6	7	8
0	Ped Walk								
1	Ped FDW								
2	Min Green								
3	Type 3 Disconnect								
4	Added per Vehicle								
5	Veh Extension								
6	Max Gap								
7	Min Gap								
8	Max Limit								
9	Max Limit 2								
A	Adv. / Delay Walk								
B	PE Min Ped FDW								
C	Cond Serv Check								
D	Reduce Every								
E	Yellow Change								
F	Red Clear								

Phase Timing - Bank 3 <C+0+F=3>

	9	A	B	C	D
	---	---	---	---	---
Phase 1					
Phase 2					
Phase 3					
Phase 4					
Phase 5					
Phase 6					
Phase 7					
Phase 8					
Max Initial					
Alternate Walk					
Alternate FDW					
Alternate Initial					
Alternate Extension					

Alternate Timing

Long Failure	0.5	<F/1+0+6>
Short Failure	0.5	<F/1+0+7>

Power Cycle Correction (Default = 0.7)

Min Time (seconds)	0	<F/1+0+8>

Min Green Before PE Force Off

Max Time (minutes)	0	<F/1+0+9>

Max Preempt Time Before Failure

Min Time (seconds)	0	<F/1+0+A>

Min Time Between Same Preempts
(Does Not Apply To Railroad Preempt)

Low Priority
1 = Channel A
2 = Channel B
3 = Channel C
4 = Channel D

Low Pri. Channel	#NAME?	<E/125+C+8>

Disable Low Priority Channel

INTERSECTION: AVENIDA DE LAS TIENDAS @ FRIARS RD

Row	6 Clear	7 Time	8 Ped Call	9 Hold	A Advance	B Force Off	C Vehicle Call	D Permit Phases	E Ped Omit	F Output
0		0								
1		0								
2		0								
3		0								
4		0								
5		0								
6		0								
7		0								
8		0								
9		0								
A		0								
B		0								
C		0								
D		0								
E		0								
F		0								

Special Event Schedule -- Table 1 <C+0+E=27>

Notes:

0 <E/27+5+F>
Limited Service Interval

Row	6 Clear	7 Time	8 Ped Call	9 Hold	A Advance	B Force Off	C Vehicle Call	D Permit Phases	E Ped Omit	F Output
0		0								
1		0								
2		0								
3		0								
4		0								
5		0								
6		0								
7		0								
8		0								
9		0								
A		0								
B		0								
C		0								
D		0								
E		0								
F		0								

Special Event Schedule -- Table 2 <C+0+E=28>

Notes:

0 <E/28+5+F>
Limited Service Interval

INTERSECTION: FRIARS ROAD @ VIA DE LA MODA

233 Program

Group Assignment:
Field Master Assignment:
System Reference Number:

N/S Street: VIA DE LA MODA
E/W Street: FRIARS

Last Database Change:

Timing sheets by: M2S
Approved by: FLG
Timing implemented on: 04/13/10

Row	Phase Numbers--->	1	2	3	4	5	6	7	8
		FRIARS				FRIARS			VIA DE LA MODA
								Dummy	
0	Ped Walk		7						7
1	Ped FDW		15						24
2	Min Green	4	10			4	10	4	4
3	Type 3 Disconnect								
4	Added per Vehicle								
5	Veh Extension	2.0	3.6			2.0	3.7	2.0	2.0
6	Max Gap	2.0	3.6			2.0	3.7	2.0	2.0
7	Min Gap	2.0	0.2			2.0	0.2	2.0	2.0
8	Max Limit	25	60			30	60	25	30
9	Max Limit 2								
A	Adv. / Delay Walk								
B	PE Min Ped FDW								
C	Cond Serv Check								
D	Reduce Every		0.9				0.8		
E	Yellow Change	3.4	4.4			3.4	4.3	3.4	3.4
F	Red Clear	1.0	1.0			1.0	1.0	1.0	1.0

Phase Timing - Bank 1 <F/1+Phase+Row>

	E
RR-1 Delay	
RR-1 Clear	
EV-A Delay	0
EV-A Clear	0
EV-B Delay	0
EV-B Clear	0
EV-C Delay	0
EV-C Clear	0
EV-D Delay	0
EV-D Clear	0
RR-2 Delay	
RR-2 Clear	
View EV Delay	---
View EV Clear	---
View RR Delay	---
View RR Clear	---

Preempt Timing <F/1+E+Row>

	F	Row
Permit	12__56_8	0
Red Lock		1
Yellow Lock		2
Min Recall	_2___6__	3
Ped Recall		4
View Set Peds		5
Rest In Walk		6
Red Rest		7
Double Entry	___4___8	8
Max Recall		9
Soft Recall		A
Max 2		B
Cond. Service		C
Man Cntrl Calls		D
Yellow Start	_2___6__	E
First Phases	_____8	F

Phase Functions <F/1+F+Row>

Current Calculated Cycle Length: C/0 + B + F

	9	A	B	C	D
	---	---	---	---	---
Phase 1					
Phase 2					
Phase 3					
Phase 4					
Phase 5					
Phase 6					
Phase 7					
Phase 8					
Max Initial					
Alternate Walk					
Alternate FDW					
Alternate Initial					
Alternate Extension					

Alternate Timing <F/1+Column+Phase>

Drop Number	2	<C/0+0+0>
Zone Number	2	<C/0+0+1>
Area Number	4	<C/0+0+2>
Area Address	82	<C/0+0+3>
QuicNet Channel	90	(QuicNet)

Communication Addresses

Manual Plan
0 = Automatic
1-9 = Plan 1-9
14 = Free
15 = Flash

(Outputs specified in Assignable Outputs at E/127+A+E & F)

Exclusive Walk	0	<F/1+0+0>
Exclusive FDW	0	<F/1+0+1>
All Red Clear	0.0	<F/1+0+2>

Exclusive Ped Phase

Flash Start	0	<F/1+0+E>
Red Revert	5.0	<F/1+0+F>
All Red Start	0.0	<F/1+C+0>

Start / Revert Times

Manual Offset
0 = Automatic
1 = Offset A
2 = Offset B
3 = Offset C

Manual Plan	0	<C/0+A+1>
Manual Offset	0	<C/0+B+1>

Manual Selection

Notes:

Free Lag	2 5 8	<C/1+F+0>

How to Set Page Access Code:
F/1 -- C + 0 + F = 1

233 Program

INTERSECTION: FRIARS ROAD @ VIA DE LA MODA

Row		Overlap 1	2	3	4	5	6	7	8
0	Load Switch Number	1	6						
1	Veh Set 1 - Phases	1____7_	____67_						
2	Veh Set 2 - Phases								
3	Veh Set 3 - Phases								
4	Neg Veh Phases	_2____8	____5__8						
5	Neg Ped Phases								
6	Green Omit Phases								
7	Green Clear Omit Phs.								
8									
9									
A									
B									
C									
D	Green Clear								
E	Yellow Change	3.4	4.3						
F	Red Clear	1.0	1.0						

Overlap Assignments <E/29+Column+Row>

	F
Fast Green Flash Phase	
Green Flash Phases	
Flashing Walk Phases	
Guaranteed Passage	
Simultaneous Gap Term	12345678
Sequential Timing	
Advance Walk Phases	
Delay Walk Phases	
External Recall	
Start-up Overlap Green	
Max Extension	
Inhibit Ped Reservice	
Semi-Actuated	
Start-up Overlap Yellow	
Start-up Vehicle Calls	12345678
Start-up Ped Calls	12345678

Specials <F/2+F+Row>

Row	E
0 Exclusive Phases	
1 RR-1 Clear Phases	
2 RR-2 Clear Phases	
3 RR-2 Limited Service	
4 Prot / Perm Phases	
5 Flash to PE Circuits	
6 Flash Entry Phases	
7 Disable Yellow Range	
8 Disable Ovp Yel Range	
9 Overlap Yellow Flash	
A EV-A Phases	_2__5___
B EV-B Phases	
C EV-C Phases	1____6__
D EV-D Phases	_____8
E Extra 1 Config. Bits	1_345___
F IC Select (Interconnect)	_2_____

Configuration <E/125+E+Row>

	F
Ext. Permit 1 Phases	12__5678
Ext. Permit 2 Phases	
Exclusive Ped Assign	
Preempt Non-Lock	12345678
Ped for 2P Output	_2_____
Ped for 6P Output	
Ped for 4P Output	
Ped for 8P Output	_____8
Yellow Flash Phases	
Low Priority A Phases	
Low Priority B Phases	
Low Priority C Phases	
Low Priority D Phases	
Restricted Phases	
Extra 2 Config. Bits	

Configuration <E/125+F+Row>

	C
EV-A	
EV-B	
EV-C	
EV-D	
RR-1 *	- - -
RR-2 *	- - -
SE-1	0
SE-2	0

<E/125+C+Row>

Preemption Priority

(* RR-1 is always Highest, and RR-2 is always Second Highest)

	2
Phase 1	0
Phase 2	0
Phase 3	0
Phase 4	0
Phase 5	0
Phase 6	0
Phase 7	0
Phase 8	0

<C/5+2+Row>

Coordination Transition Minimums

Extra 1 Flags
1 = TBC Type 1
2 = NEMA Ext. Coord
3 = Auto Daylight Savings
4 = EV Advance
5 = Extended Status
6 = International Ped
7 = Flash - Clear Outputs
8 = Spanning

IC Select Flags
1 =
2 = Modem
3 = 7-Wire Slave
4 = Flash / Free
5 =
6 = Simplex Master
7 = 7-Wire Master
8 = Offset Interrupter

Extra 2 Flags
1 = AWB During Initial
2 = LMU Installed
3 = Disable Min Walk
4 = QuicNet/4 System
5 = Ignore P/P on EV
6 =
7 = Reserved
8 =

Flash to PE & PE Non-Lock
1 = EV A 5 = RR 1
2 = EV B 6 = RR 2
3 = EV C 7 = SE 1
4 = EV D 8 = SE 2

8-0 Hour, Minute, Day-of-Week
8-1 Day-of-Month, Year, Month
8-F Seconds

Time and Date

Begin Month	3	<C/5+2+A>
Begin Week	2	<C/5+2+B>
End Month	11	<C/5+2+C>
End Week	1	<C/5+2+D>

Daylight Savings Time

Daylight Savings Date:
If set to all zeros, standard date will be used.

Version: 233 RV2

INTERSECTION: FRIARS ROAD @ VIA DE LA MODA

233 Program

Row	Detector Name	0 C1 Pin Number	1 Attributes	2 Phase(s)	3 Assign	1 Delay	3 Carry-Over
0	2I2U	39	45_7_	_2_____	123____8		1.8
1	6J2U	40	45_7_	____6__	123____8		1.8
2		41	45_7_	___4___	123____8		
3		42	45_7_	_____8	123____8		
4	2I2L	43	45_7_	_2_____	123____8		1.8
5	6J2L	44	45_7_	____6__	123____8		1.8
6		45	45_7_	___4___	123____8		
7	8J6L	46	45_7_	_____8	123____8	5.0	
8		47	67_	_2_____	123____8		
9		48	67_	____6__	123____8		
A		49	67_	___4___	123____8		
B		50	67_	_____8	123____8		
C		55	45_7_	___5___	123____8		
D		56	45_7_	1_____7_	123____8		
E		57	45_7_	_____7_	123____8		
F		58	45_7_	__3____	123____8		

Program Type:

Row	Detector Name	4 C1 Pin Number	5 Attributes	6 Phase(s)	7 Assign	2 Delay	4 Carry-Over
0		59	45_7_	___5___	123____8		
1		60	45_7_	1_____	123____8		
2		61	45_7_	_____7_	123____8		
3		62	45_7_	__3____	123____8		
4		63	45_7_	_2_____	123____8		
5		64	45_7_	____6__	123____8		
6		65	45_7_	___4___	123____8		
7		66	45_7_	_____8	123____8		
8		67	_2_____	_2_____	123____8		
9		68	_2_____	____6__	123____8		
A		69	_2_____	___4___	123____8		
B		70	_2_____	_____8	123____8		
C		76	45_7_	_2_____	123____8		
D		77	45_7_	____6__	123____8		
E		78	45_7_	___4___	123____8		
F		79	45_7_	_____8	123____8		

Detector Assignments <E/126+Column+Row> <D/0+Column+Row>

Detector Attributes
1 = Full Time Delay
2 = Ped Call
3 =
4 = Count
5 = Extension
6 = Type 3
7 = Calling
8 = Alternate

Det. Assignments
1 = Det. Set 1
2 = Det. Set 2
3 = Det. Set 3
4 =
5 =
6 = Failure - Min Recall
7 = Failure - Max Recall
8 = Report on Failure

	Ped / Phase / Overlap 1	2	3	4	5	6	7	8	Row
Walk									0
Don't Walk									1
Phase Green									2
Phase Yellow									3
Phase Red									4
Overlap Green									5
Overlap Yellow									6
Overlap Red									7

Redirect Phase Outputs <E/127+Column+Row>

Cabinet Type	30

<E/125+D+0>

Enable Redirection
(Enable Redirection = 30)

Max OFF (minutes)	5	<D/0+0+1>
Max ON (minutes)	60	<D/0+0+2>

Detector Failure Monitor

	D	Row
		0
Output Port 1		1
Output Port 2		2
Output Port 3		3
Output Port 4		4
Output Port 5		5
Output Port 6		6
Output Port 7		7

Dimming <E/125+D+Row>

	D
Number of Digits	
1 st Digit	
2 ed Digit	
3 ed Digit	
4 th Digit	
5 th Digit	
6 th Digit	
7 th Digit	
8 th Digit	
9 th Digit	
10 th Digit	
11 th Digit	
12 th Digit	
13 th Digit	
14 th Digit	
15 th Digit	

<C/5+D+Row>

Dial-Back Telephone Number

Disable Alarms
1 = Stop Time
2 = Flash Sense
3 = Keyboard Entry
4 = Manual Plan
5 = Police Control
6 = External Alarm
7 = Detector Failure
8 =

	B	Row
DELAY-A	1	A
DELAY-B	1	B
DELAY-C	0	C
DELAY-D	0	D
DELAY-E	0	E
DELAY-F	0	F

<D/0+B+Row> (seconds)

Delay Logic Times

Omit Alarm	

<C/5+F+0>

Disable Alarm Reporting

Time	0	<C/5+C+0>

Redial Time (minutes)
(View Redial Timer at E/2+D+6)

INTERSECTION: FRIARS ROAD @ VIA DE LA MODA

Row	Time	Plan	Offset	Day of Week
0	07 : 00	7	A	_23456_
1	09 : 00	E	A	_23456_
2	15 : 00	8	A	_23456_
3	18 : 30	E	A	1234567
4				
5				
6				
7				
8				
9				
A				
B				
C				
D				
E				
F				

TOD Coordination <9/0.1+Row> (Bank 1)

Time	Funct.	Day of Week	Column 4 Phases/Bits

TOD Function <7/0.1+Row> <E/27+4+Row>

Row	Day	Year	Month	Holiday Type
0				
1				
2				
3				
4				
5				
6				
7				
8				
9				
A				
B				
C				
D				
E				
F				

Holiday Dates <8/1.1+Row> (Bank 1)

Time	Plan	Offset	Holiday Type	Row
				0
				1
				2
				3
				4
				5
				6
				7
				8
				9
				A
				B
				C
				D
				E
				F

Holiday Events <9/1.1+Row> (Bank 1)

T.O.D. Functions:
0 =
1 = Red Lock
2 = Yellow Lock
3 = Veh Min Recall
4 = Ped Recall
5 =
6 = Rest In Walk
7 = Red Rest
8 = Double Entry
9 = Veh Max Recall
A = Veh Soft Recall
B = Maximum 2
C = Conditional Service
D = Free Lag Phases
E = Bit 1 - Local Override
Bit 4 - Disable Detector OFF Monitor
Bit 7 - Detector Count Monitor
Bit 8 - Real Time Split Monitor
F = Output Bits 1 thru 8

Plan Select:
1 thru 9 = Coordination Plan 1 thru 9
14 or E = Free
15 or F = Flash

Month Select:
1 = January
2 = February
3 = March
4 = April
5 = May
6 = June
7 = July
8 = August
9 = September
A = October
B = November
C = December

Cycle Timer:
Master: C/0 + A + 0
Ring A: C/0 + B + 0
Ring B: C/0 + D + 0

Interval Timer:
Ring A: F/0 + A + Interval Row
Ring B: F/0 + B + Interval Row

Master Plan: C/0 + A + 2
Current Plan: C/0 + A + 3
TOD Plan: C/0 + A + 5

Row	Time	Plan	Offset	Day of Week
0				
1				
2				
3				
4				
5				
6				
7				
8				
9				
A				
B				
C				
D				
E				
F				

TOD Coordination <9/0.2+Row> (Bank 2)

Time	Funct.	Holiday Type	Column 4 Phases/Bits

Holiday TOD Function <7/0.2+Row> <E/28+Row>

Row	Day	Year	Month	Holiday Type
0				
1				
2				
3				
4				
5				
6				
7				
8				
9				
A				
B				
C				
D				
E				
F				

Holiday Dates <8/1.2+Row> (Bank 2)

Time	Plan	Offset	Holiday Type	Row
				0
				1
				2
				3
				4
				5
				6
				7
				8
				9
				A
				B
				C
				D
				E
				F

Holiday Events <9/1.2+Row> (Bank 2)

INTERSECTION: FRIARS ROAD @ VIA DE LA MODA

233 Program

Coord Extra
1 = Programmed WALK Time for Sy[illegible]ses
2 = Always Terminate Sync Phase Peds

Row	Plan Name --->	Plan 1	2	3	4	5	6	7 AM	8 PM	9
0	Cycle Length							112	136	
1	Phase 1 - ForceOff							48	75	
2	Phase 2 - ForceOff							0	0	
3	Phase 3 - ForceOff									
4	Phase 4 - ForceOff									
5	Phase 5 - ForceOff							46	70	
6	Phase 6 - ForceOff							0	0	
7	Phase 7 - ForceOff								23	
8	Phase 8 - ForceOff							35	58	
9	Ring Offset									
A	Offset 1							105	63	
B	Offset 2									
C	Offset 3									
D	Perm 1 - End							11	14	
E	Hold Release							255	255	
F	Zone Offset							0	0	

Coordination - Timing Plans <C/1+Plan+Row>

Row		E
0		
1	Plan 1 - Sync	
2	Plan 2 - Sync	
3	Plan 3 - Sync	
4	Plan 4 - Sync	
5	Plan 5 - Sync	
6	Plan 6 - Sync	
7	Plan 7 - Sync	_2___6__
8	Plan 8 - Sync	_2___6__
9	Plan 9 - Sync	
A	NEMA Sync	
B	NEMA Hold	
C		
D		
E	Coord Extra	
F		

Sync Phases <C/1+E+Row>

Row		Plan 1	2	3	4	5	6	7	8	9
0	Ped Adjustment									
1	Perm 2 - Start								10	
2	Perm 2 - End								40	
3	Perm 3 - Start								40	
4	Perm 3 - End								55	
5	Reservice Time								0	
6	Reservice Phases									
7										
8	Pretimed Phases									
9	Max Recall									
A	Perm 1 Veh Phase								_____7_	
B	Perm 1 Ped Phase									
C	Perm 2 Veh Phase								_____8	
D	Perm 2 Ped Phase									
E	Perm 3 Veh Phase								1___5___	
F	Perm 3 Ped Phase									

Coordination - Parameters <C/2+Plan+Row>

Row		F
0	Free Lag	
1	Plan 1 - Lag	
2	Plan 2 - Lag	
3	Plan 3 - Lag	
4	Plan 4 - Lag	
5	Plan 5 - Lag	
6	Plan 6 - Lag	
7	Plan 7 - Lag	_2___6_8
8	Plan 8 - Lag	_2___6_8
9	Plan 9 - Lag	
A	External Lag	
B		
C		
D		
E		
F		

Lag Phases <C/1+F+Row>

Coordination Timing By: KH&A
Implemented on: 2/17/2010

Row	Column 9		Column A		Column B		Column C		Column D		Column E		Column F		Row
0	Spec. Funct. 1		NOT-3		Max 2		Pretimed		Set Monday		Dial 2 (7-Wire)		Sim Term		0
1	Spec. Funct. 2		NOT-4		System Det 1		Plan 1		Ext. Perm 1	210	Dial 3 (7-Wire)		EV-A	71	1
2	Spec. Funct. 3		OR-4 (a)		System Det 2		Plan 2		Ext. Perm 2		Offset 1 (7-Wire)		EV-B	72	2
3	Spec. Funct. 4		OR-4 (b)		System Det 3		Plan 3		Dimming		Offset 2 (7-Wire)		EV-C	73	3
4	NAND-3 (a)		OR-5 (a)		System Det 4		Plan 4		Set Clock		Offset 3 (7-Wire)		EV-D	74	4
5	NAND-3 (b)		OR-5 (b)		System Det 5		Plan 5		Stop Time	82	Free (7-Wire)		RR-1	51	5
6	NAND-4 (a)		OR-6 (a)		System Det 6		Plan 6		Flash Sense	81	Flash (7-Wire)		RR-2	52	6
7	NAND-4 (b)		OR-6 (b)		System Det 7		Plan 7		Manual Enable		Excl. Ped Omit		Spec. Event 1		7
8	OR-7 (a)		Fig 3 Diamond		System Det 8		Plan 8		Man. Advance		NOT-1		Spec. Event 2		8
9	OR-7 (b)		Fig 4 Diamond		Max Inhibit (nema)		Plan 9		External Alarm		NOT-2		External Lag		9
A	OR-7 (c)		AND-4 (a)		Force A (nema)		DELAY-A		Phase Bank 2		OR-1 (a)		AND-1 (a)		A
B	OR-7 (d)		AND-4 (b)		Force B (nema)		DELAY-B		Phase Bank 3		OR-1 (b)		AND-1 (b)		B
C	OR-8 (a)		NAND-1 (a)		C.N.A. (nema)		DELAY-C		Overlap Set 2		OR-2 (a)	203	AND-2 (a)		C
D	OR-8 (b)		NAND-1 (b)		Hold (nema)		DELAY-D		Overlap Set 3		OR-2 (b)	0	AND-2 (b)		D
E	OR-8 (c)		NAND-2 (a)		Max Recall		DELAY-E		Detector Set 2		OR-3 (a)		AND-3 (a)		E
F	OR-8 (d)		NAND-2 (b)		Min Recall		DELAY-F		Detector Set 3		OR-3 (b)		AND-3 (b)		F

Assignable Inputs <E/126+Column+Row>

Row	Column 9		Column A		Column B		Column C		Column D		Column E		Column F		Row
0	Phase ON - 1		Preempt Fail		Flasher 0		Free		NOT-1		TOD Out 1		Dial 2 (7-Wire)		0
1	Phase ON - 2		Sp Evnt Out 1		Flasher 1		Plan 1		OR-1		TOD Out 2		Dial 3 (7-Wire)		1
2	Phase ON - 3		Sp Evnt Out 2		Fast Flasher		Plan 2		OR-2	210	TOD Out 3		Offset 1 (7-Wire)		2
3	Phase ON - 4		Sp Evnt Out 3		Fig 3 Diamond		Plan 3		OR-3		TOD Out 4		Offset 2 (7-Wire)		3
4	Phase ON - 5		Sp Evnt Out 4		Fig 4 Diamond		Plan 4		AND-1		TOD Out 5		Offset 3 (7-Wire)		4
5	Phase ON - 6		Sp Evnt Out 5				Plan 5		AND-2		TOD Out 6		Free (7-Wire)		5
6	Phase ON - 7		Sp Evnt Out 6				Plan 6		AND-3		TOD Out 7		Flash (7-Wire)	81	6
7	Phase ON - 8		Sp Evnt Out 7				Plan 7		NOT-2		TOD Out 8		Preempt		7
8	Ph. Check - 1		Sp Evnt Out 8		NOT-3		Plan 8	203	EV-A		Adv. Warn - 1		Low Priority A		8
9	Ph. Check - 2				NOT-4		Plan 9		EV-B		Adv. Warn - 2		Low Priority B		9
A	Ph. Check - 3		Detector Fail		OR-4		Spec. Funct. 3		EV-C		DELAY-A		Low Priority C		A
B	Ph. Check - 4		Spec. Funct. 1		OR-5		Spec. Funct. 4		EV-D		DELAY-B		Low Priority D		B
C	Ph. Check - 5		Spec. Funct. 2		OR-6		NAND-3		RR-1		DELAY-C				C
D	Ph. Check - 6		Central Control		AND-4		NAND-4		RR-2		DELAY-D				D
E	Ph. Check - 7		Excl. Ped DW		NAND-1		OR-7		Spec. Event 1		DELAY-E				E
F	Ph. Check - 8		Excl. Ped WK		NAND-2		OR-8		Spec. Event 2		DELAY-F				F

Assignable Outputs <E/127+Column+Row>

Row		Phase 1	2	3	4	5	6	7	8
0	Ped Walk								
1	Ped FDW								
2	Min Green								
3	Type 3 Disconnect								
4	Added per Vehicle								
5	Veh Extension								
6	Max Gap								
7	Min Gap								
8	Max Limit								
9	Max Limit 2								
A	Adv. / Delay Walk								
B	PE Min Ped FDW								
C	Cond Serv Check								
D	Reduce Every								
E	Yellow Change								
F	Red Clear								

Phase Timing - Bank 2 <C+0+F=2>

	9	A	B	C	D
	---	---	---	---	---
Phase 1					
Phase 2					
Phase 3					
Phase 4					
Phase 5					
Phase 6					
Phase 7					
Phase 8					
Max Initial					
Alternate Walk					
Alternate FDW					
Alternate Initial					
Alternate Extension					

Alternate Timing

Transition Type
0.X = Shortway
1.X = Lengthen
X.1 thru X.4 = Number of cycles when lengthing

Transition Type	0.3	<C/5+1+9>

TBC Transition

Lag Hold Phases		<C/5+1+A>

Coordinated Lag Hold Phases

Sync Output Time	0.0	<C/5+1+C>

7-Wire Master

Time B4 Yellow	0.0	<F/1+C+E>
Phase Number	0	<F/1+C+F>

Advance Warning Beacon - Sign 1

Time B4 Yellow	0.0	<F/1+D+E>
Phase Number	0	<F/1+D+F>

Advance Warning Beacon - Sign 2

Row		1	2	3	4	5	6	7	8
0	Ped Walk								
1	Ped FDW								
2	Min Green								
3	Type 3 Disconnect								
4	Added per Vehicle								
5	Veh Extension								
6	Max Gap								
7	Min Gap								
8	Max Limit								
9	Max Limit 2								
A	Adv. / Delay Walk								
B	PE Min Ped FDW								
C	Cond Serv Check								
D	Reduce Every								
E	Yellow Change								
F	Red Clear								

Phase Timing - Bank 3 <C+0+F=3>

	9	A	B	C	D
	---	---	---	---	---
Phase 1					
Phase 2					
Phase 3					
Phase 4					
Phase 5					
Phase 6					
Phase 7					
Phase 8					
Max Initial					
Alternate Walk					
Alternate FDW					
Alternate Initial					
Alternate Extension					

Alternate Timing

Long Failure	0.5	<F/1+0+6>
Short Failure	0.5	<F/1+0+7>

Power Cycle Correction (Default = 0.7)

Min Time (seconds)	0	<F/1+0+8>

Min Green Before PE Force Off

Max Time (minutes)	0	<F/1+0+9>

Max Preempt Time Before Failure

Min Time (seconds)	0	<F/1+0+A>

Min Time Between Same Preempts
(Does Not Apply To Railroad Preempt)

Low Priority
1 = Channel A
2 = Channel B
3 = Channel C
4 = Channel D

Low Pri. Channel	#NAME?	<E/125+C+8>

Disable Low Priority Channel

INTERSECTION: FRIARS ROAD @ VIA DE LA MODA

Row	6 Clear	7 Time	8 Ped Call	9 Hold	A Advance	B Force Off	C Vehicle Call	D Permit Phases	E Ped Omit	F Output
0		0								
1		0								
2		0								
3		0								
4		0								
5		0								
6		0								
7		0								
8		0								
9		0								
A		0								
B		0								
C		0								
D		0								
E		0								
F		0								

Special Event Schedule -- Table 1 <C+0+E=27>

Notes:

0 <E/27+5+F>
Limited Service Interval

Row	6 Clear	7 Time	8 Ped Call	9 Hold	A Advance	B Force Off	C Vehicle Call	D Permit Phases	E Ped Omit	F Output
0		0								
1		0								
2		0								
3		0								
4		0								
5		0								
6		0								
7		0								
8		0								
9		0								
A		0								
B		0								
C		0								
D		0								
E		0								
F		0								

Special Event Schedule -- Table 2 <C+0+E=28>

Notes:

0 <E/28+5+F>
Limited Service Interval

LOCATION: **RTE 163 NB / FRIARS RD**

CALTRANS C8 Version 3 DATE: 9/21/2010

F PAGE

	INTERVAL	PHASE TIMING 1	2	3	4	5	6	7	8	9
0	WALK	1	1	1	1	1	1	1	1	CLK RST
1	DONT WALK	1	1	1	1	1	1	1	1	
2	MIN GREEN	1	12	1	5	1	1	1	1	
3	TYPE 3 DET	0	0	0	0	0	0	0	0	
4	ADD/VEH	0.0	0.0	0.0	0.0	0.0	0.0	0.0	0.0	
5	PASSAGE	0.9	2.0	0.9	2.0	0.9	0.9	0.9	0.9	
6	MAX GAP	0.9	2.0	0.9	2.0	0.9	0.9	0.9	0.9	
7	MIN GAP	0.9	2.0	0.9	2.0	0.9	0.9	0.9	0.9	
8	MAX EXT	9	40	9	40	9	9	9	9	
9	MAX 2									YR
A	MAX 3									MO
B										DAY
C	REDUCE BY	0.0	0.0	0.0	0.0	0.0	0.0	0.0	0.0	DOW
D	EVERY	1.0	1.0	1.0	1.0	1.0	1.0	1.0	1.0	HR
E	YELLOW	3.0	4.5	3.0	3.5	3.0	3.0	3.0	3.0	MIN
F	RED	1.0	1.0	1.0	1.0	1.0	1.0	1.0	1.0	SEC
	PED XING FT									
	BIKE XING FT		75							

PRE-EMPTION E		F FLAGS	1	2	3	4	5	6	7	8	
EV SEL	0	PERMIT	1	2	3	4	5	6	7	8	0
RR1 CLR	5	RED LOCK									1
EVA DLY	0	YEL LOCK									2
EVA CLR	5	V RECALL		2							3
EVB DLY	0	P RECALL									4
EVB CLR	5	PED PHASES									5
EVC DLY	0	RT OLA									6
EVC CLR	5	RT OLB									7
EVD DLY	0	DBL ENTRY									8
EVD CLR	5	MAX 2 PHASES									9
MAX EV	255	LAG PHASES	READ ONLY								A
RR2 CLR	5	RED REST									B
		REST-IN-WALK									C
		MAX 3 PHASES									D
		YEL START UP		2							E
		FIRST PHASE				4					F
			1	2	3	4	5	6	7	8	

FOC	LONG FAILURE	
FOD	SHORT FAILURE	
	FOE	0
	FOF	5
	FCO	3
	FC1	3
	FC2	10
	FCA	0.0
	FCB	0.0
	FCC	0.0
	FCD	0.0
FDO	TB SELECT	1
FD3	PED SELECT	0
FD4	7 WIRE	0
FD5	PERMISSIVE	0
FD8	OS SEEKING	1
CO5	FLASH TYPE	1
CC2	DOWNLOAD	1

NOTES:

ENTRIES IN THESE LOCATIONS CAN BE CHANGED IN CC1 FLASH ONLY

LOCATION: **RTE 163 NB / FRIARS ROAD**

CALTRANS C8

C PAGE

DATE: 1/31/94

		CONTROL PLANS									Y-COORD			LAG PHASE	FLAG									
		1	2	3	4	5	6	7	8	9		C	D	E	F	1	2	3	4	5	6	7	8	
0	CYCLE LENGTH														LAG FZ FREE		X		X		X		X	0
1	FZ1 GRN FCTR													GAPOUT CP1	LAG FZ CP 1									1
2														GAPOUT CP2	LAG FZ CP 2									2
3	FZ3 GRN FCTR													GAPOUT CP3	LAG FZ CP 3									3
4	FZ4 GRN FCTR										PERM TIME			GAPOUT CP4	LAG FZ CP 4									4
5	FZ5 GRN FCTR										LAG OFFSET			GAPOUT CP5	LAG FZ CP 5									5
6											FORCE OFF			GAPOUT CP6	LAG FZ CP 6									6
7	FZ7 GRN FCTR										LONG GRN			GAPOUT CP7	LAG FZ CP 7									7
8	FZ8 GRN FCTR										NO GREEN			GAPOUT CP8	LAG FZ CP 8									8
9	MULTI CYCLE													GAPOUT CP9	LAG FZ CP 9									9
A	OFFSET A										OFFSET				LAG C COORD									A
B	OFFSET B														LAG D COORD									B
C	OFFSET C														COORD FAZES		X				X			C
D	FZ 3 EXT																							D
E	FZ 7 EXT																							E
F	OFFSET INTRP																							F

CO1 MANUAL CP
CO2 MASTER CP
CO3 CURRENT CP
CO4 LAST CP
CO7 TRNSMT CP
COD MANUAL OFFSET
CAO LOCAL CYCLE TIMER
CBO MASTER CYCLE TIMER
CAA LOCAL OFFSET
CBA MASTER OFFSET

SYSTEM MASTER :
RTE 163 SB @ FRIARS

LOCATION	OFF	ON
1		X
2	X	
3	X	
4	X	
5	X	
6	X	
7	X	
8	X	

COO = 1

CCB/CDB OFFSET TIMER
CCC/CDC LAG GREEN TIMER
CCD/CDD FORCE OFF TIMER
CCE/CDE LONG GREEN TIMER
CCF/CDF NO GREEN TIMER

LOCATION: **RTE 163 NB / FRIARS ROAD**

CALTRANS C8 DATE 1/31/94

D PAGE

	D	FLAGS								E	FLAGS								F	FLAGS							
	MAX	1	2	3	4	5	6	7	8	MIN	1	2	3	4	5	6	7	8	PED	1	2	3	4	5	6	7	8
0	RCL									RCL									RCL								
1	CP 1									CP 1									CP 1								
2	CP 2									CP 2									CP 2								
3	CP 3									CP 3									CP 3								
4	CP 4									CP 4									CP 4								
5	CP 5									CP 5									CP 5								
6	CP 6									CP 6									CP 6								
7	CP 7									CP 7									CP 7								
8	CP 8									CP 8									CP 8								
9	CP 9									CP 9									CP 9								
A																			RCL 1								
B																			RCL 2								
C																											
D																											
E																											
F																											

E PAGE

	E	FLAGS								F	FLAGS								
	FUNCTION	1	2	3	4	5	6	7	8	FUNCTION	1	2	3	4	5	6	7	8	
0										CODE 4									0
1										CODE 5									1
2										C-RECALL									2
3										D-RECALL									3
4										EXCLUSIVE									4
5										2 PED		X							5
6										6 PED						X			6
7										4 PED				X					7
8										8 PED								X	8
9																			9
A	OLA NOT									OLA ON									A
B	OLB NOT									OLB ON									B
C	OLC NOT									OLC ON									C
D	OLD NOT									OLD ON									D
E																			E
F																			F
		1	2	3	4	5	6	7	8		1	2	3	4	5	6	7	8	

LAST POWER FAILURE REGISTER

HOUR = D-A-E

MINUTE = D-B-E

DAY = D-C-E

RCL 1 = TIME OF DAY MAX RECALL (1ST SELECT) PHASES
(CALL ACTIVE LIGHTS)

RCL 2 = TIME OF DAY MAX RECALL (2ND SELECT) PHASES
(CALL ACTIVE LIGHTS)

LAST FLASH TIME REGISTER

HOUR = D-A-F

MINUTE = D-B-F

DAY = D-C-F

D-E-E = C8 VERSION NUMBER

D-E-F = LITHIUM BATTERY CONDITION

84 = BAD

85 = GOOD

LOCATION: **RTE 163 NB / FRIARS ROAD**

CALTRANS C8 DATE : 1/31/94

7 PAGE

TIME OF DAY ACTIVITY TABLE										
7+EVENT+HR+MIN+ACT+"E"+ON/OFF+DOW LTS										
				ON/	S	M	T	W	T	F	S
	HR	MIN	ACT	OFF	1	2	3	4	5	6	7
0											
1											
2											
3											
4											
5											
6											
7											
8											
9											
A											
B											
C											
D											
E											
F											

9 PAGE C09 = 0 or 1

CONTROL PLAN TIME OF DAY											
9+EVENT+HR+MIN+CP+OS+E+DOW											
					S	M	T	W	T	F	S
	HR	MIN	CP	OS	1	2	3	4	5	6	7
0											
1											
2											
3											
4											
5											
6											
7											
8											
9											
A											
B											
C											
D											
E											
F											

9 PAGE CO9 = 2

CONTROL PLAN TIME OF DAY											
9+EVENT+HR+MIN+CP+OS+E+DOW											
					S	M	T	W	T	F	S
	HR	MIN	CP	OS	1	2	3	4	5	6	7
0											
1											
2											
3											
4											
5											
6											
7											
8											
9											
A											
B											
C											
D											
E											
F											

ACTIVITY CODE

1 TYPE OF MAX TERMINATION

2 MAX 2

3 MAX 3

4 COND SERV (1ST SELECT)

5 COND SERV (2ND SELECT)

6 ENERGIZE AUX OUTPUT-RED

7 ENERGIZE AUX OUTPUT-GREEN

8 ENERGIZE AUX OUTPUT-YELLOW

9 TIME OF DAY MAX RECALL (1ST SELECT)

A TRAFFIC ACT. MAX 2 OPERATION

B TIME OF DAY MAX RECALL (2ND SELECT)

C YELLOW YIELD COORDINATION

D YELLOW YIELD COORDINATION

E TIME OF DAY FREE OPERATION

F FLASHING OPERATION

DIST.	COUNTY	ROUTE	SHEET NO.	TOTAL SHEETS
11	SD	163	4.4	

DISTRICT TRAFFIC ENGINEER — REGISTERED CIVIL ENGINEER NO. 9361

DATE APPROVED

POLE SCHEDULE

LOC.	STANDARD TYPE	MASTARM SIG.	MASTARM LUM.	PLACEMENT DIMENSIONS A ft.	PLACEMENT DIMENSIONS B ft.	SIGNAL MOUNTING & PLACEMENT: VEHICLE POLE	VEHICLE MASTARM	PEDESTRIAN SIGNAL	PEDESTRIAN P.P.B	REMARKS
Ⓐ	19-4-80	30' [1]	12'	DIM.	6	SV-1-T (LOCATE ON SIDE (1)) ES-3B	MAS (BOTH)			HPS-250 LUMINAIRE PEU
Ⓑ	15 [2]		12' [2]	DIM.						HPS-250 LUMINAIRE (480 VOLT BALLAST)
Ⓒ	23-4-80	35' [3]		10' FROM NOSE	CTR.	SV-2-TB (LOCATE ON SIDE (4)) ES-3B	(4) - MAT SINGLE SECT-MAT SINGLE SECT-MAT			
Ⓓ	PEDESTRIAN BARRICADE - ES-6A. INSTALL STATE-FURNISHED SIGN PANEL R 49-2.									
Ⓔ	PEDESTRIAN BARRICADE - ES-6A. INSTALL STATE-FURNISHED SIGN PANEL R 49-2.									
Ⓕ	STATE-FURNISHED CONTROLLER ASSEMBLY (TYPE-170 FOUNDATION, ES-4B)									

CONDUCTOR SCHEDULE

AWG SIZE	PHASE	CIRCUIT	CONDUIT RUN & SIZE 1-1/2" (1)	1-1/2" (2)	2" (3)	1-1/2" (4)	2" (5)	1-1/2" (6)	1-1/2" (7)	1-1/2" (8)
#14	2	VEHICLE SIGNAL		3	3		3			
	4	↓					3			
		CONTROLLER GREEN					1			
		PHOTOELECTRIC UNIT		3	3		3	3	3	
#14		SPARES		3	3		3			
TOTAL NO. 14				9	9		13	3	3	
#10		SIGNAL COMMON		1	1		1			
		LIGHTING		2	2		2	2	2	
	2	LOOP DLC			1	2	3			
DLC	4	↓	1	1	1		1			
#8		EXIST. SIGNAL & LTG.							4	
#4		SIGNAL CONTROLLER						2	2	
#4		SERVICE								3
TOTAL CONDUCTORS / CABLES			1	13	14	2	20	7	11	3

SP — TYPE H, EXIST. NO. A 4.44, NEW NO. A 4.42, P# 179930

MP — TYPE III SERVICE EQUIPMENT CABINET (ES-2B)

CIRCUIT BREAKERS

MAIN - 4P-70 AMP.
A - SP-50 AMP. SIGNAL # P4.410
B - SP-40 AMP. SIGNAL # P4.450
C - SP-15 AMP. PEU
D - SPARE
E - SPARE
F - SPARE
G - } 2P-30 AMP. LIGHTING (2P-CONTACTOR)
H - }

PHASE DIAGRAM

EMERGENCY OPERATION: FLASH ALL SIGNALS RED.

(1) SIGNAL # P4.410
(2) SIGNAL # P4.450
(3) PEU
(4) SPARE
(5) SPARE
(6) LIGHTING

MP WIRING DIAGRAM

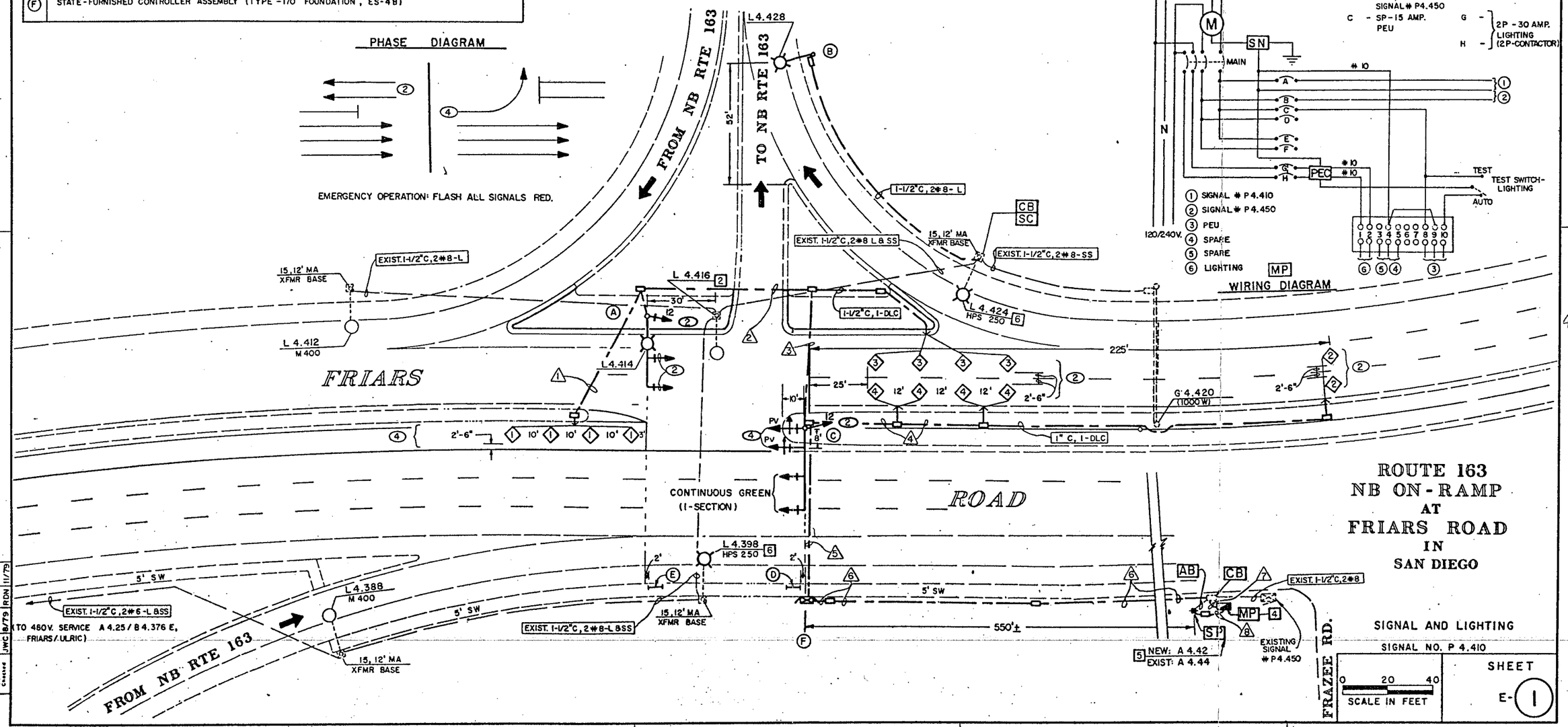

ROUTE 163 NB ON-RAMP AT FRIARS ROAD IN SAN DIEGO

SIGNAL AND LIGHTING

SIGNAL NO. P 4.410

0 20 40 SCALE IN FEET

SHEET E-1

Project Engineer	Date	Design Engineer	Date	Approval Recommended By	Date
D A GILMOUR	7/79	M A CHASE	7/79	R B FINDLAY	7/79

CU 11359 WO 188921

REVISIONS		
GN	10/79	11-2-79
JWC	8/79	RDN 11/79

INTERSECTION: FRIARS RD @ NAPA ST

223 Program

Group Assignment:
Field Master Assignment:

N/S Street Name: NAPA
E/W Street Name: FRIARS

Row	Column # --->	1	2	3	4	5	6	7	8
			FRIARS	PED	NAPA		FRIARS		
	Phase # --->	1	2	3	4	5	6	7	8
0	Ped Walk		7	7			7		
1	Ped FDW		17	20			20		
2	Min Green		7	4	4	4	7		
3	Type 3 Limit								
4	Add/Veh								
5	Veh Extn		4.6	0.0	5.0	2.0	4.2		
6	Max Gap		4.6	0.0	5.0	2.0	4.2		
7	Min Gap		0.2	0.0	0.2	2.0	0.2		
8	Max Limit		30	0	20	30	30		
9	Max Limit 2		40		40		40		
A	Bus Adv								
B	Call to Phs								
C	Reduce By		0.1		0.1		0.1		
D	Every		0.7		0.6		0.8		
E	Yellow		5.0	3.0	3.9	3.4	4.6		
F	Red Clear		1.0		1.0	1.0	1.0		

Phase Timing - Bank 1
F + Phase + Row

<F Page>

	E
RR-1 Delay	
RR-1 Clear	
EV-A Delay	0
EV-A Clear	0
EV-B Delay	0
EV-B Clear	0
EV-C Delay	0
EV-C Clear	0
EV-D Delay	
EV-D Clear	
RR-2 Delay	
RR-2 Clear	
View EV Delay	---
View EV Clear	---
View RR Delay	---
View RR Clear	---

F + E + Row

Row		F
0	Permit	_23456__
1	Red Lock	
2	Yellow Lock	
3	Min Recall	_2___6__
4	Ped Recall	
5	Peds (View)	_23__6__
6	Rest In Walk	
7	Red Rest	
8	Dbl Entry	
9	Max Recall	
A	Soft Recall	
B	Max 2	
C	Cond Serv	
D	Ped Lock	12345678
E	Yellow Start	_2___6__
F	1st Phases	___4____

F + F + Row

Max Initial	0	F + 0 + E
Red Revert	5.0	F + 0 + F
All Red Start	0.0	F + C + O

Start / Revert Times

Drop Number	4	C + 0 + 0
Zone Number	4	C + 0 + 1
Area Number	5	C + 0 + 2
Area Address	81	C + 0 + 3
QuicNet Channel	COM 51	(QuicNet)

Communication Addresses

C + F + O	F	Row
Free Lag	_23__6__	0

Lag Phases <C Page>

Overlap Timing

	Row	9 Green Clear	C Yellow Change	D Red Clear	0 Load-Switch #
Overlap A	A				
Overlap B	B				
Overlap C	C				
Overlap D	D				

<F Page> <D Page>
F + COLOR + D + 0 + OVERLAP

Manual Plan	14	C + A + 1
Manual Offset	0	C + B + 1

Manual Selection

Manual Plan
0 = Automatic
1-9 = Plan 1-9
14 = Free
15 = Flash

Manual Offset
0 = Automatic
1 = Offset A
2 = Offset B
3 = Offset C

Downtime Flash	255	(minutes)

Downtime Before Auto Manual Flash
F + 0 +8

Disable Ports	_234____

Disable Communication Ports
D + D + 9

Timing Sheet By: M2S
Approved By: FLG
Drawing Number: 26904-82-D
Timing Implemented On: 05/03/10

INTERSECTION: FRIARS RD @ NAPA ST

Row	Time	Function	Day of Week	Column F Phases/Bits
0	16 : 00	B	23456	2 4 6
1	18 : 30	B	23456	
2	00 : 01	E	1234567	1
3				
4				
5				
6				
7				
8				
9				
A				
B				
C				
D				
E				
F				

TOD Function

7 + ROW

<D Page>

D + F + ROW

T.O.D. Functions
0 = Permitted Phases
1 = Red Lock
2 = Yellow Lock
3 = Veh Min Recall
4 = Ped Recall
5 =
6 = Rest In Walk
7 = Red Rest
8 = Double Entry
9 = Veh Max Recall
A = Veh Soft Recall
B = Maximum 2
C = Conditional Service
D = Free Lag Phases
E = Bit 1 - Local Override
Bit 2 - Phase Bank 2
Bit 3 - Phase Bank 3
Bit 4 - Disable Detector OFF Monitor
Bit 7 - Detector Count Monitor
Bit 8 - Real Time Split Monitor
F = Output Bits 1 thru 4

Row		F
0		
1	RR Overlap A - Phases	
2	RR Overlap B - Phases	
3	RR Overlap C - Phases	
4	RR Overlap D - Phases	
5	Ped 2P	2
6	Ped 6P	6
7	Ped 4P	
8	Ped 8P	3
9	Yellow Flash Phases	
A	Overlap A - Phases	4 6
B	Overlap B - Phases	
C	Overlap C - Phases	
D	Overlap D - Phases	
E	Restricted Phases	
F	Assign 5 Outputs	1

Configuration

<E Page>

E + F + ROW

Day of Week

1 = Sunday
2 = Monday
3 = Tuesday
4 = Wednesday
5 = Thursday
6 = Friday
7 = Saturday

Row		E
0	Exclusive Phases	
1	RR-1 Clear Phases	
2	RR-2 Clear Phases	
3	RR-2 Limited Service	
4	Prot / Perm Phases	
5	Overlap A - Green Omit	6
6	Overlap B - Green Omit	
7	Overlap C - Green Omit	
8	Overlap D - Green Omit	
9	Overlap Yellow Flash	
A	EV-A Phases	2 5
B	EV-B Phases	4
C	EV-C Phases	6
D	EV-D Phases	
E	Extra 1 Config. Bits	1 345
F	IC Select (Interconnect)	2

Configuration

For access, set F + 9 + E = 1

E + E + ROW

Extra 1 Flags
1 = TBC Type 1
2 = NEMA Ext. Coord
3 = Auto Daylight Savings
4 = EV Advance
5 = Remote Download
6 = Special Event
7 = Pretimed Operation
8 = Split Ring Operation

IC Select Flags
1 =
2 = Modem
3 = 7-Wire Slave
4 = Flash / Free
5 =
6 = Simplex Master
7 = 7-Wire Master
8 = Offset Interrupter

Assign 5 Outputs
1 = Right Turn Overlap
2 = TOD Outputs
3 = EV Beacon - Steady
4 = EV Beacon - Flashing
5 = Special Event Outputs
6 = Phase 3 & 7 Ped
7 = Advanced Warning Sign
8 = Bus Advance

Time and Date

8-0 Hour, Minute, Day-of-Week
8-1 Day-of-Month, Year, Month
8-F Seconds

Disable Parity	0	D+B+0

Dial-Up Telephone Communications

(If set to a non-zero value, parity will be disabled)

Program Information

C + C + 0 = program
C + C + F = version

Remote Download

C + 0 + 4 = 1 -255
w/ E + E + E bit 5 on

INTERSECTION: FRIARS RD @ NAPA ST

223 Program

Row	1 Delay	3 Carry-over
0		
1		1.8
2		
3		
4		
5		
6		
7		1.8
8		
9		
A		
B		
C		
D		
E	---	---
F	---	---

Detector Name	332 Input File	Detector Number
	1I1	14
	2I2U	1
	2I2L	5
	2I3U	21
	2I3L	25
	2I4	9
	3I5	16
	4I6U	3
	4I6L	7
	4I7U	23
	4I7L	27
	4I8	11
	1I9U	18
	3I9L	20
---	---	---
---	---	---

Row	2 Delay	4 Carry-over
0		
1		1.8
2		
3		
4		
5		
6		
7		
8		
9		
A		
B		
C		
D		
E	---	---
F	---	---

Detector Name	332 Input File	Detector Number
	5J1	13
	6J2U	2
	6J2L	6
	6J3U	22
	6J3L	26
	6J4	10
	7J5	15
	8J6U	4
	8J6L	8
	8J7U	24
	8J7L	28
	8J8	12
	5J9U	17
	7J9L	19
---	---	---
---	---	---

Detector Delay & Carryover <D Page>

D + X (across) + ROW

Row	Detector Numbers	E
A	1 2 3 4 5 6 7 8	12345678
B	9 10 11 12 -- -- -- --	1234____
C	13 14 15 16 17 18 19 20	12345678
D	-- -- -- -- 21 22 23 24	____5678
E	-- -- -- -- -- -- -- --	1234____
F	-- 25 26 27 28 -- -- --	_2345___

Active Detectors <D Page>

Row		0 Detector #
0		
1	System Det. # 1	
2	System Det. # 2	
3	System Det. # 3	
4	System Det. # 4	
5	System Det. # 5	
6	System Det. # 6	
7	System Det. # 7	
8	System Det. # 8	

System Detectors <D Page>

Max ON (min)	5	D+A+E
Max OFF (min)	60	D+A+F

Detector Failure Monitor

Phase Number		F+C+1
Time Before Yellow		F+C+3

Advance Warning Beacon - Sign 1

Phase Number		F+D+1
Time Before Yellow		F+D+3

Advance Warning Beacon - Sign 2

Long Failure	0.5	F+0+6
Short Failure	0.5	F+0+7

Power Cycle Correction (Default = 0.5)

LOCATION: **RTE 163 SB / FRIARS RD - ULRIC ST**

CALTRANS C8 Version 3 DATE: 3/3/2014

F PAGE

	INTERVAL	PHASE TIMING 1	2	3	4	5	6	7	8	9
0	WALK	1	7	1	7	1	1	1	1	CLK RST
1	DONT WALK	1	14	1	35	1	1	1	1	
2	MIN GREEN	1	10	5	15	15	13	1	1	
3	TYPE 3 DET	0	0	0	0	0	0	0	0	
4	ADD/VEH	0.0	0.0	0.0	0.0	0.0	0.0	0.0	0.0	
5	PASSAGE	0.9	2.0	2.0	2.0	2.0	2.0	0.9	0.9	
6	MAX GAP	0.9	2.0	2.0	2.0	2.0	2.0	0.9	0.9	
7	MIN GAP	0.9	2.0	2.0	2.0	2.0	2.0	0.9	0.9	
8	MAX EXT	9	45	45	40	20	45	9	9	
9	MAX 2									YR
A	MAX 3									MO
B										DAY
C	REDUCE BY	0.0	0.0	0.0	0.0	0.0	0.0	0.0	0.0	DOW
D	EVERY	1.0	1.0	1.0	1.0	1.0	1.0	1.0	1.0	HR
E	YELLOW	3.0	5.0	3.6	3.6	3.2	5.0	3.0	3.0	MIN
F	RED	1.0	2.0	1.0	1.0	1.0	2.0	1.0	1.0	SEC
	PED XING FT		50		122					
	BIKE XING FT		57		125	130	90			

PRE-EMPTION E	
EV SEL	0
RR1 CLR	5
EVA DLY	0
EVA CLR	5
EVB DLY	0
EVB CLR	5
EVC DLY	0
EVC CLR	5
EVD DLY	0
EVD CLR	5
MAX EV	255
RR2 CLR	5

F FLAGS	1	2	3	4	5	6	7	8	
PERMIT	1	2	3	4	5	6	7	8	0
RED LOCK			3	4	5				1
YEL LOCK									2
V RECALL		2				6			3
P RECALL									4
PED PHASES		2		4					5
RT OLA									6
RT OLB									7
DBL ENTRY									8
MAX 2 PHASES									9
LAG PHASES	READ ONLY								A
RED REST									B
REST-IN-WALK									C
MAX 3 PHASES									D
YEL START UP		2				6			E
FIRST PHASE			3						F
	1	2	3	4	5	6	7	8	

FOC LONG FAILURE	
FOD SHORT FAILURE	
FOE	0
FOF	5
FCO	3
FC1	3
FC2	10
FCA	0.0
FCB	0.0
FCC	0.0
FCD	0.0
FD0 TB SELECT	1
FD3 PED SELECT	0
FD4 7 WIRE	0
FD5 PERMISSIVE	0
FD8 OS SEEKING	1
CO5 FLASH TYPE	1
CC2 DOWNLOAD	1

NOTES:

ENTRIES IN THESE LOCATIONS CAN BE CHANGED IN CC1 FLASH ONLY

LOCATION: **RTE 163 SB / FRIARS RD - ULRIC ST**

CALTRANS C8 Version 3 DATE: 2/1/2010

C PAGE

		CONTROL PLANS									Y-COORD			LAG PHASE	FLAGS									
		1	2	3	4	5	6	7	8	9		C	D	E	F	1	2	3	4	5	6	7	8	
0	CYCLE LENGTH	**140**	**140**	**136**											LAG FZ FREE		**2**		**4**		**6**		**8**	0
1	FZ1 GRN FCTR	**0**	**0**	**0**										GAPOUT CP1	LAG FZ CP 1		**2**		**4**		**6**		**8**	1
2														GAPOUT CP2	LAG FZ CP 2		**2**		**4**		**6**		**8**	2
3	FZ3 GRN FCTR	**42**	**40**	**39**										GAPOUT CP3	LAG FZ CP 3		**2**		**4**		**6**		**8**	3
4	FZ4 GRN FCTR	**28**	**30**	**29**							PERM TIME			GAPOUT CP4	LAG FZ CP 4									4
5	FZ5 GRN FCTR	**18**	**18**	**16**							LAG OFFSET			GAPOUT CP5	LAG FZ CP 5									5
6											FORCE OFF			GAPOUT CP6	LAG FZ CP 6									6
7	FZ7 GRN FCTR	**0**	**0**	**0**							LONG GRN			GAPOUT CP7	LAG FZ CP 7									7
8	FZ8 GRN FCTR	**0**	**0**	**0**							NO GREEN			GAPOUT CP8	LAG FZ CP 8									8
9	MULTI CYCLE	**0**	**0**	**0**										GAPOUT CP9	LAG FZ CP 9									9
A	OFFSET A	**105**	**45**	**60**							OFFSET				LAG C COORD									A
B	OFFSET B														LAG D COORD									B
C	OFFSET C														COORD FAZES		**2**				**6**			C
D	FZ 3 EXT																							D
E	FZ 7 EXT																							E
F	OFFSET INTRPT																							F
																1	2	3	4	5	6	7	8	

CO1 MANUAL CP
CO2 MASTER CP
CO3 CURRENT CP
CO4 LAST CP
CO7 TRNSMT CP
COD MANUAL OFFSET
CAO LOCAL CYCLE TIMER
CBO MASTER CYCLE TIMER
CAA LOCAL OFFSET
CBA MASTER OFFSET

SYSTEM MASTER:
RTE 163 SB RAMP

FEATURE	OFF	ON
1		
2		
3		
4		
5		
6		
7		
8		

LOCATION	OFF	ON
1		
2		1
3		
4		
5		
6		
7		
8		

COO = **2**

CCB/CDB OFFSET TIMER
CCC/CDC LAG GREEN TIMER
CCD/CDD FORCE OFF TIMER
CCE/CDE LONG GREEN TIMER
CCF/CDF NO GREEN TIMER

LOCATION: **RTE 163 SB / FRIARS RD - ULRIC ST**

CALTRANS C8

D PAGE

DATE 1/31/94

	D	FLAGS								E	FLAGS								F	FLAGS							
	MAX	1	2	3	4	5	6	7	8	MIN	1	2	3	4	5	6	7	8	PED	1	2	3	4	5	6	7	8
0	RCL									RCL									RCL								
1	CP 1									CP 1									CP 1								
2	CP 2									CP 2									CP 2								
3	CP 3									CP 3									CP 3								
4	CP 4									CP 4									CP 4								
5	CP 5									CP 5									CP 5								
6	CP 6									CP 6									CP 6								
7	CP 7									CP 7									CP 7								
8	CP 8									CP 8									CP 8								
9	CP 9									CP 9									CP 9								
A																			RCL 1								
B																			RCL 2								
C																											
D																											
E																											
F																											

E PAGE

	E	FLAGS								F	FLAGS								
	FUNCTION	1	2	3	4	5	6	7	8	FUNCTION	1	2	3	4	5	6	7	8	
0										CODE 4									0
1										CODE 5									1
2										C-RECALL									2
3										D-RECALL									3
4										EXCLUSIVE									4
5										2 PED		X							5
6										6 PED						X			6
7										4 PED				X					7
8										8 PED								X	8
9																			9
A	OLA NOT									OLA ON									A
B	OLB NOT									OLB ON									B
C	OLC NOT									OLC ON									C
D	OLD NOT									OLD ON									D
E																			E
F																			F
		1	2	3	4	5	6	7	8		1	2	3	4	5	6	7	8	

LAST POWER FAILURE REGISTER

HOUR = D-A-E

MINUTE = D-B-E

DAY = D-C-E

RCL 1 = TIME OF DAY MAX RECALL (1ST SELECT) PHASES

(CALL ACTIVE LIGHTS)

RCL 2 = TIME OF DAY MAX RECALL (2ND SELECT) PHASES

(CALL ACTIVE LIGHTS)

LAST FLASH TIME REGISTER

HOUR = D-A-F

MINUTE = D-B-F

DAY = D-C-F

D-E-E = C8 VERSION NUMBER

D-E-F = LITHIUM BATTERY CONDITION

84 = BAD

85 = GOOD

LOCATION: **RTE 163 SB / FRIARS RD - ULRIC ST**

CALTRANS C8 Version 3 DATE: 2/10/2010

7 PAGE

TIME OF DAY ACTIVITY TABLE										
7+EVENT+HR+MIN+ACT+"E"+ON/OFF+DOW LTS										
	HR	MIN	ACT	ON/ OFF	S 1	M 2	T 3	W 4	T 5	F 6	S 7
0											
1											
2											
3											
4											
5											
6											
7											
8											
9											
A											
B											
C											
D											
E											
F											

ACTIVITY CODE

1 TYPE OF MAX TERMINATION
2 MAX 2
3 MAX 3
4 COND SERV (1ST SELECT)
5 COND SERV (2ND SELECT)
6 ENERGIZE AUX OUTPUT-RED

7 ENERGIZE AUX OUTPUT-GREEN

8 ENERGIZE AUX OUTPUT-YELLOW

9 TIME OF DAY MAX RECALL (1ST SELECT)
A TRAFFIC ACT. MAX 2 OPERATION
B TIME OF DAY MAX RECALL (2ND SELECT)
C YELLOW YIELD COORDINATION
D YELLOW YIELD COORDINATION
E TIME OF DAY FREE OPERATION
F FLASHING OPERATION

9 PAGE C09 = 0 or 1

CONTROL PLAN TIME OF DAY										
9+EVENT+HR+MIN+CP+OS+E+DOW										
	HR	MIN	CP	OS	S 1	M 2	T 3	W 4	T 5	F 6	S 7
0	**12**	**00**	**1**	**A**		**2**	**3**	**4**	**5**	**6**	
1	**15**	**00**	**3**	**A**		**2**	**3**	**4**	**5**	**6**	
2	**19**	**00**	**E**	**A**		**2**	**3**	**4**	**5**	**6**	
3	**11**	**00**	**1**	**A**	**1**						**7**
4	**19**	**00**	**E**	**A**	**1**						**7**
5											
6											
7											
8											
9											
A											
B											
C											
D											
E											
F											

9 PAGE CO9 = 2

CONTROL PLAN TIME OF DAY										
9+EVENT+HR+MIN+CP+OS+E+DOW										
	HR	MIN	CP	OS	S 1	M 2	T 3	W 4	T 5	F 6	S 7
0											
1											
2											
3											
4											
5											
6											
7											
8											
9											
A											
B											
C											
D											
E											
F											

DIST	COUNTY	ROUTE		SHEET NO.	TOTAL SHEETS
11	SD	15, 94, 163	Var	5	13

DISTRICT TRAFFIC ENGINEER — REGISTERED CIVIL ENGINEER NO. 9361

DATE APPROVED June 4, 1984

13 - 2 INCH C. 1-DLC.

14 - 1 1/2 INCH C. 2-DLC.

28 - 2 1/2 INCH C. 16 LOOP CONDUCTORS IN TWISTED PAIRS.

29 - 2 INCH C. 3-DLC.

30 - 3 INCH C. 6-DLC.

31 - EXIST. 1 INCH C. WITH 2 NO. 8 - CONTROLLER.

32 - EXIST. 1 1/2 INCH C. WITH 7 NO. 14 - INTERCONNECT.

2 - CONSTRUCT SPECIAL DETECTOR HANDHOLE. SEE "DETECTOR HANDHOLE DETAIL", SHEET E-1.

3 - EXISTING CONTROLLER ASSEMBLY WITH TYPE "R" CABINET TO BE SALVAGED.
- INSTALL STATE FURNISHED MODEL 170 CONTROLLER CABINET, USING R/170 CABINET ADAPTER. DETAILED ON SHEET E-1.
- SPLICE AS NECESSARY TO COMPLETE SIGNAL CIRCUITS.
- INSTALL P.C.C. PADS FOR FRONT AND BACK DOORS PER ES-4B.

13 - EXISTING TYPE "G" CABINET, PEDESTAL AND AUXILIARY TIMERS TO REMAIN IN PLACE.

25 - INSTALL PEDESTRIAN SIGNAL. CONNECT TO EXISTING (FUTURE USE) PEDESTRIAN SIGNAL CONDUCTORS.

26 - DRILL EXISTING FOUNDATION FOR NEW CONDUIT ENTRANCE. GROUT AROUND NEW CONDUIT.

PHASE DESIGNATIONS

EMERGENCY OPERATION: FLASH ALL PHASES RED.

TYPICAL LOOP DETECTOR PLACEMENT

LIKE NUMBERED LOOPS SHALL BE CONNECTED TO THE SAME DLC.

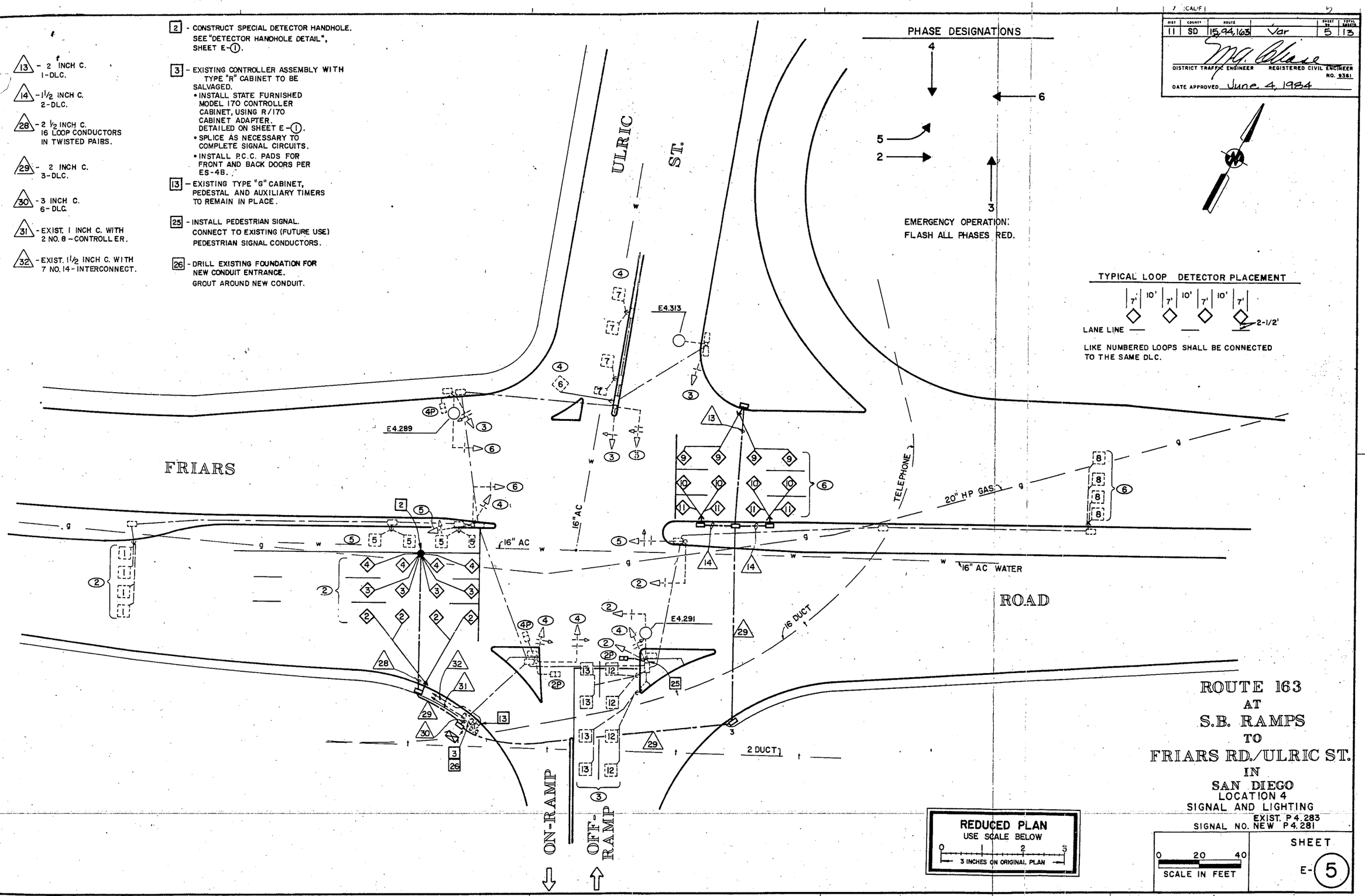

REDUCED PLAN
USE SCALE BELOW
0 1 2
3 INCHES ON ORIGINAL PLAN

ROUTE 163 AT S.B. RAMPS TO FRIARS RD./ULRIC ST. IN SAN DIEGO

LOCATION 4
SIGNAL AND LIGHTING

SIGNAL NO. EXIST. P4.283 NEW P4.281

0 20 40
SCALE IN FEET

SHEET E-5

Project Engineer	Date	Design Engineer	Date	Approval Recommended By	Date
M.C. GUINESS	1/84	M.A. CHASE	1/84	J. O. GRAY	1/84

CU 11359 WO 192411

REV. 5/84

FORM WH23A PF

INTERSECTION: FRIARS RD @ VIA LAS CUMBRES

223 Program

Group Assignment:
Field Master Assignment:

N/S Street Name: VIA LAS CUMBRES
E/W Street Name: FRIARS

Row	Phase # ---->	1	2	3	4	5	6	7	8
			FRIARS		VIA LAS CUMBRES		FR		
0	Ped Walk				7		7		
1	Ped FDW				25		19		
2	Min Green		10		4	4	10		
3	Type 3 Limit								
4	Add/Veh								
5	Veh Extn		2.4		2.0	2.0	2.4		
6	Max Gap		2.4		2.0	2.0	2.4		
7	Min Gap		0.2		2.0	2.0	0.2		
8	Max Limit		60		30	30	60		
9	Max Limit 2								
A	Bus Adv								
B	Call to Phs								
C	Reduce By		0.1				0.1		
D	Every		1.3				1.3		
E	Yellow		4.7		4.1	3.4	4.9		
F	Red Clear		1.0		1.0	1.0	1.0		

Phase Timing - Bank 1
F + Phase + Row

<F Page>

	E
RR-1 Delay	
RR-1 Clear	
EV-A Delay	0
EV-A Clear	0
EV-B Delay	
EV-B Clear	
EV-C Delay	0
EV-C Clear	0
EV-D Delay	
EV-D Clear	
RR-2 Delay	
RR-2 Clear	
View EV Delay	---
View EV Clear	---
View RR Delay	---
View RR Clear	---

F + E + Row

	F	Row
Permit	_2_456__	0
Red Lock		1
Yellow Lock		2
Min Recall	_2___6__	3
Ped Recall		4
Peds (View)	___4_6__	5
Rest in Walk		6
Red Rest		7
Dbl Entry		8
Max Recall		9
Soft Recall		A
Max 2		B
Cond Serv		C
Ped Lock	12345678	D
Yellow Start	_2___6__	E
1st Phases	___4_____	F

F + F + Row

Note: FDW calculated using 3.5 fps.

Max Initial	0	F + 0 + E
Red Revert	5.0	F + 0 + F
All Red Start	0.0	F + C + O

Start / Revert Times

Drop Number	6	C + 0 + 0
Zone Number	6	C + 0 + 1
Area Number	5	C + 0 + 2
Area Address	83	C + 0 + 3
QuicNet Channel	COM51	(QuicNet)

Communication Addresses

C + F + O	F	Row
Free Lag	_2_4_6__	0

Lag Phases <C Page>

Overlap Timing

	Row	9 Green Clear	C Yellow Change	D Red Clear	0 Load-Switch #
Overlap A	A				
Overlap B	B				
Overlap C	C				
Overlap D	D				

<F Page>
F + COLOR +

<D Page>
D + 0 + OVERLAP

Manual Plan	14	C + A + 1
Manual Offset	0	C + B + 1

Manual Selection

Manual Plan
0 = Automatic
1-9 = Plan 1-9
14 = Free
15 = Flash

Manual Offset
0 = Automatic
1 = Offset A
2 = Offset B
3 = Offset C

Downtime Flash	255	(minutes)

Downtime Before Auto Manual Flash
F + 0 +8

Disable Ports	_234____

Disable Communication Ports
D + D + 9

Timing Sheet By: M2S
Approved By: FLG
Drawing Number: 16804-1-D
Timing Implemented On:

Row	Time	Function	Day of Week	Column F Phases/Bits
0				
1				
2				
3				
4				
5				
6				
7				
8				
9				
A				
B				
C				
D				
E				
F				

TOD Function

7 + ROW

<D Page>

D + F + ROW

T.O.D. Functions
0 = Permitted Phases
1 = Red Lock
2 = Yellow Lock
3 = Veh Min Recall
4 = Ped Recall
5 =
6 = Rest In Walk
7 = Red Rest
8 = Double Entry
9 = Veh Max Recall
A = Veh Soft Recall
B = Maximum 2
C = Conditional Service
D = Free Lag Phases
E = Bit 1 - Local Override
Bit 2 - Phase Bank 2
Bit 3 - Phase Bank 3
Bit 4 - Disable Detector OFF Monitor
Bit 7 - Detector Count Monitor
Bit 8 - Real Time Split Monitor
F = Output Bits 1 thru 4

Row		F
0		
1	RR Overlap A - Phases	
2	RR Overlap B - Phases	
3	RR Overlap C - Phases	
4	RR Overlap D - Phases	
5	Ped 2P	
6	Ped 6P	6
7	Ped 4P	4
8	Ped 8P	
9	Yellow Flash Phases	
A	Overlap A - Phases	
B	Overlap B - Phases	
C	Overlap C - Phases	
D	Overlap D - Phases	
E	Restricted Phases	
F	Assign 5 Outputs	

Configuration

<E Page>

E + F + ROW

Day of Week

1 = Sunday
2 = Monday
3 = Tuesday
4 = Wednesday
5 = Thursday
6 = Friday
7 = Saturday

Assign 5 Outputs
1 = Right Turn Overlap
2 = TOD Outputs
3 = EV Beacon - Steady
4 = EV Beacon - Flashing
5 = Special Event Outputs
6 = Phase 3 & 7 Ped
7 = Advanced Warning Sign
8 = Bus Advance

Row		E
0	Exclusive Phases	
1	RR-1 Clear Phases	
2	RR-2 Clear Phases	
3	RR-2 Limited Service	
4	Prot / Perm Phases	
5	Overlap A - Green Omit	
6	Overlap B - Green Omit	
7	Overlap C - Green Omit	
8	Overlap D - Green Omit	
9	Overlap Yellow Flash	
A	EV-A Phases	2 5
B	EV-B Phases	
C	EV-C Phases	6
D	EV-D Phases	
E	Extra 1 Config. Bits	1 345
F	IC Select (Interconnect)	2

Configuration

For access, set F + 9 + E = 1

E + E + ROW

Extra 1 Flags
1 = TBC Type 1
2 = NEMA Ext. Coord
3 = Auto Daylight Savings
4 = EV Advance
5 = Remote Download
6 = Special Event
7 = Pretimed Operation
8 = Split Ring Operation

IC Select Flags
1 =
2 = Modem
3 = 7-Wire Slave
4 = Flash / Free
5 =
6 = Simplex Master
7 = 7-Wire Master
8 = Offset Interrupter

Time and Date

8-0 Hour, Minute, Day-of-Week
8-1 Day-of-Month, Year, Month
8-F Seconds

Disable Parity	0	D+B+0

Dial-Up Telephone Communications
(If set to a non-zero value, parity will be disabled)

Program Information

C + C + 0 = program
C + C + F = version

Remote Download

C + 0 + 4 = 1 -255
w/ E + E + E bit 5 on

INTERSECTION: FRIARS RD @ VIA LAS CUMBRES

223 Program

Row	1 Delay	3 Carry-over	Detector Name	332 Input File	Detector Number
0				1I1	14
1		1.8		2I2U	1
2				2I2L	5
3				2I3U	21
4				2I3L	25
5				2I4	9
6				3I5	16
7				4I6U	3
8	10.0			4I6L	7
9				4I7U	23
A				4I7L	27
B				4I8	11
C				1I9U	18
D				3I9L	20
E	---	---	---	---	---
F	---	---	---	---	---

Row	2 Delay	4 Carry-over	Detector Name	332 Input File	Detector Number
0				5J1	13
1		1.8		6J2U	2
2				6J2L	6
3				6J3U	22
4				6J3L	26
5				6J4	10
6				7J5	15
7				8J6U	4
8				8J6L	8
9				8J7U	24
A				8J7L	28
B				8J8	12
C				5J9U	17
D				7J9L	19
E	---	---	---	---	---
F	---	---	---	---	---

Detector Delay & Carryover <D Page>

D + X (across) + ROW

Row	Detector Numbers	E
A	1 2 3 4 5 6 7 8	12345678
B	9 10 11 12 -- -- -- --	1234___
C	13 14 15 16 17 18 19 20	12345678
D	-- -- -- -- 21 22 23 24	___5678
E	-- -- -- -- -- -- -- --	1234___
F	-- 25 26 27 28 -- -- --	_2345___

Active Detectors <D Page>

Row		0 Detector #
0		
1	System Det. # 1	
2	System Det. # 2	
3	System Det. # 3	
4	System Det. # 4	
5	System Det. # 5	
6	System Det. # 6	
7	System Det. # 7	
8	System Det. # 8	

System Detectors <D Page>

Max ON (min)	5	D+A+E
Max OFF (min)	60	D+A+F

Detector Failure Monitor

Phase Number		F+C+1
Time Before Yellow		F+C+3

Advance Warning Beacon - Sign 1

Phase Number		F+D+1
Time Before Yellow		F+D+3

Advance Warning Beacon - Sign 2

Long Failure	0.5	F+0+6
Short Failure	0.5	F+0+7

Power Cycle Correction (Default = 0.5)

INTERSECTION: GENESEE @ LINDA VISTA

223 Program

Group Assignment: 4052
Field Master Assignment: NONE

N/S Street Name: LINDA VISTA
E/W Street Name: GENESEE

Last Database Change:
System Ref. Number: 455

(9)

N

Row	Column # --->	1	2	3	4	5	6	7	8
		Genesee Av		Linda Vista Rd		Genesee Av		Linda Vista Rd	
	Phase # --->	1	2	3	4	5	6	7	8
0	Ped Walk		7		7		7		7
1	Ped FDW		25		24		28		31
2	Min Green	4	10	4	10	4	10	4	10
3	Type 3 Limit								
4	Add/Veh								
5	Veh Extn	2.0	4.2	2.0	3.9	2.0	4.5	2.0	5.2
6	Max Gap	2.0	4.2	2.0	3.9	2.0	4.5	2.0	5.2
7	Min Gap	2.0	0.2	2.0	0.2	2.0	0.2	2.0	0.2
8	Max Limit	40	60	40	60	40	60	40	60
9	Max Limit 2								
A	Bus Adv								
B	Call to Phs								
C	Reduce By		0.1		0.1		0.1		0.1
D	Every		0.8		0.8		0.7		0.6
E	Yellow	3.4	4.3	3.4	4.2	3.4	4.3	3.4	3.9
F	Red Clear	1.0	1.0	1.0	1.0	1.0	1.0	1.0	1.0
	Grade								

Phase Timing - Bank 1
F + Phase + Row

<F Page>

	E
RR-1 Delay	
RR-1 Clear	
EV-A Delay	0
EV-A Clear	0
EV-B Delay	0
EV-B Clear	0
EV-C Delay	0
EV-C Clear	0
EV-D Delay	0
EV-D Clear	0
RR-2 Delay	
RR-2 Clear	
View EV Delay	---
View EV Clear	---
View RR Delay	---
View RR Clear	---

Preempt Timing
F + E + Row

Row		F
0	Permit	12345678
1	Red Lock	
2	Yellow Lock	
3	Min Recall	
4	Ped Recall	
5	Peds (View)	_2_4_6_8
6	Rest In Walk	
7	Red Rest	
8	Dbl Entry	
9	Max Recall	
A	Soft Recall	_2___6__
B	Max 2	
C	Cond Serv	
D	Ped Lock	12345678
E	Yellow Start	_2___6__
F	1st Phases	__3___7_

Phase Functions <F Page>
F + F + Row

Max Initial	0	F + 0 + E
Red Revert	5.0	F + 0 + F
All Red Start	0.0	F + C + O

Start / Revert Times

Drop Number	5	C + 0 + 0
Zone Number	5	C + 0 + 1
Area Number	5	C + 0 + 2
Area Address	47	C + 0 + 3
QuicNet Channel	COM44:	(QuicNet)

Communication Addresses

C + F + O	F	Row
Free Lag	_2_4_6_8	0

Lag Phases <C Page>

Overlap Timing

	Row	9 Green Clear	C Yellow Change	D Red Clear	0 Load-Switch #
Overlap A	A				
Overlap B	B				
Overlap C	C				
Overlap D	D				

<F Page> F + COLOR +

<D Page> D + 0 + OVERLAP

Manual Plan	0	C + A + 1
Manual Offset	0	C + B + 1

Manual Selection

Manual Plan
0 = Automatic
1-9 = Plan 1-9
14 = Free
15 = Flash

Manual Offset
0 = Automatic
1 = Offset A
2 = Offset B
3 = Offset C

Downtime Flash	255	(minutes)

Downtime Before Auto Manual Flash
F + 0 +8

Disable Ports	_234____

Disable Communication Ports
D + D + 9

Timing Sheet By: JS2
Approved By: FLG
Drawing Number: 24312-7
Timing Implemented On: 6/1/10

INTERSECTION: GENESEE @ LINDA VISTA

223 Program

Row	Time	Function	Day of Week	Column F Phases/Bits
0	:			
1	:			
2	:			
3	:			
4	:			
5	:			
6	:			
7	:			
8	:			
9	:			
A	:			
B	:			
C	:			
D	:			
E	:			
F	:			

TOD Function

7 + ROW

<D Page>

D + F + ROW

T.O.D. Functions
0 = Permitted Phases
1 = Red Lock
2 = Yellow Lock
3 = Veh Min Recall
4 = Ped Recall
5 =
6 = Rest In Walk
7 = Red Rest
8 = Double Entry
9 = Veh Max Recall
A = Veh Soft Recall
B = Maximum 2
C = Conditional Service
D = Free Lag Phases
E = Bit 1 - Local Override
Bit 2 - Phase Bank 2
Bit 3 - Phase Bank 3
Bit 4 - Disable Detector OFF Monitor
Bit 7 - Detector Count Monitor
Bit 8 - Real Time Split Monitor
F = Output Bits 1 thru 4

Row		F
0		
1	RR Overlap A - Phases	
2	RR Overlap B - Phases	
3	RR Overlap C - Phases	
4	RR Overlap D - Phases	
5	Ped 2P	2
6	Ped 6P	6
7	Ped 4P	4
8	Ped 8P	8
9	Yellow Flash Phases	
A	Overlap A - Phases	
B	Overlap B - Phases	
C	Overlap C - Phases	
D	Overlap D - Phases	
E	Restricted Phases	
F	Assign 5 Outputs	

Configuration

<E Page>

E + F + ROW

Day of Week

1 = Sunday
2 = Monday
3 = Tuesday
4 = Wednesday
5 = Thursday
6 = Friday
7 = Saturday

Row		E
0	Exclusive Phases	
1	RR-1 Clear Phases	
2	RR-2 Clear Phases	
3	RR-2 Limited Service	
4	Prot / Perm Phases	
5	Overlap A - Green Omit	
6	Overlap B - Green Omit	
7	Overlap C - Green Omit	
8	Overlap D - Green Omit	
9	Overlap Yellow Flash	
A	EV-A Phases	2 5
B	EV-B Phases	4 7
C	EV-C Phases	1 6
D	EV-D Phases	3 8
E	Extra 1 Config. Bits	1 345
F	IC Select (Interconnect)	2

Configuration

For access, set F + 9 + E = 1

E + E + ROW

Extra 1 Flags
1 = TBC Type 1
2 = NEMA Ext. Coord
3 = Auto Daylight Savings
4 = EV Advance
5 = Remote Download
6 = Special Event
7 = Pretimed Operation
8 = Split Ring Operation

IC Select Flags
1 =
2 = Modem
3 = 7-Wire Slave
4 = Flash / Free
5 =
6 = Simplex Master
7 = 7-Wire Master
8 = Offset Interrupter

Assign 5 Outputs
1 = Right Turn Overlap
2 = TOD Outputs
3 = EV Beacon - Steady
4 = EV Beacon - Flashing
5 = Special Event Outputs
6 = Phase 3 & 7 Ped
7 = Advanced Warning Sign
8 =

Time and Date

8-0 Hour, Minute, Day-of-Week
8-1 Day-of-Month, Year, Month
8-F Seconds

Disable Parity	0	D+B+0

Dial-Up Telephone Communications

(If set to a non-zero value, parity will be disabled)

Program Information

C + C + 0 = program
C + C + F = version

Remote Download

C + 0 + 4 = 1 -255
w/ E + E + E bit 5 on

Row	1 Delay	3 Carry-over
0		
1		1.8
2		
3		
4		
5		
6		
7		1.8
8		
9		
A		
B		
C		
D		
E	---	---
F	---	---

Detector Name	332 Input File	Detector Number
	1I1	14
	2I2U	1
	2I2L	5
	2I3U	21
	2I3L	25
	2I4	9
	3I5	16
	4I6U	3
	4I6L	7
	4I7U	23
	4I7L	27
	4I8	11
	1I9U	18
	3I9L	20
---	---	---
---	---	---

Row	2 Delay	4 Carry-over
0		
1		1.8
2		
3		
4		
5		
6		
7		1.8
8		2.0
9		
A		
B		
C		
D		
E	---	---
F	---	---

Detector Name	332 Input File	Detector Number
	5J1	13
	6J2U	2
	6J2L	6
	6J3U	22
	6J3L	26
	6J4	10
	7J5	15
	8J6U	4
	8J6L	8
	8J7U	24
	8J7L	28
	8J8	12
	5J9U	17
	7J9L	19
---	---	---
---	---	---

Detector Delay & Carryover <D Page>

D + X (across) + ROW

Row	Detector Numbers	E
A	1 2 3 4 5 6 7 8	12345678
B	9 10 11 12 -- -- -- --	1234____
C	13 14 15 16 17 18 19 20	12345678
D	-- -- -- -- 21 22 23 24	____5678
E	-- -- -- -- -- -- -- --	1234____
F	-- 25 26 27 28 -- -- --	_2345___

Active Detectors <D Page>

Row		0 Detector #
0		
1	System Det. # 1	
2	System Det. # 2	
3	System Det. # 3	
4	System Det. # 4	
5	System Det. # 5	
6	System Det. # 6	
7	System Det. # 7	
8	System Det. # 8	

System Detectors <D Page>

Max ON (min)	5	D+A+E
Max OFF (min)	60	D+A+F

Detector Failure Monitor

Phase Number		F+C+1
Time Before Yellow		F+C+3

Advance Warning Beacon - Sign 1

Phase Number		F+D+1
Time Before Yellow		F+D+3

Advance Warning Beacon - Sign 2

Long Failure	0.5	F+0+6
Short Failure	0.5	F+0+7

Power Cycle Correction (Default = 0.5)

INTERSECTION: GENESEE @ LINDA VISTA

223 Program

M25
03/07/12

Coordination Timing By: KH&A
Implemented On: 2/3/2010

Row	Column # --->	Plan 1	2	3	4	5	6	7	8	9
	Plan Name --->	[redacted]		PM						
0	Cycle Length	124		110						
1	Phase 1 - ForceOff	26		77						
2	Phase 2 - ForceOff	63		0						
3	Phase 3 - ForceOff	88		21						
4	Phase 4 - ForceOff	0		54						
5	Phase 5 - ForceOff	21		75						
6	Phase 6 - ForceOff	63		0						
7	Phase 7 - ForceOff	81		21						
8	Phase 8 - ForceOff	0		54						
9	Ring Offset									
A	Offset A	93		81						
B	Offset B									
C	Offset C									
D	Permissive	12		10						
E	Hold Release	255		255						
F	Ped Shift	0		0						

Coordination <C Page>

C + Plan + ROW

FOR OBSERVATION ONLY

Master Plan	C + A + 2
Current Plan	C + A + 3
Next Plan	C + A + 4
T.O.D. Plan	C + A + 5
Master Cycle	C + A + 0
Ring A Cycle	C + B + 0
Ring B Cycle	C + D + 0
Min Cycle	C + A + E
Max Cycle	C + B + E

Row	Time	Plan	Offset	Day of Week
0	14 : ~~00~~ 30	1 ~~3~~	A	_23456_
1	18 : 30	E	A	1234567
2	:			
3	:			
4	:			
5	:			
6	:			
7	:			
8	:			
9	:			
A	:			
B	:			
C	:			
D	:			
E	:			
F	:			

TOD Coordination

<9 Key with C+0+9=1>

	E
Plan 1	_2_4_6_8
Plan 2	
Plan 3	_2___6___
Plan 4	
Plan 5	
Plan 6	
Plan 7	
Plan 8	
Plan 9	
Coord Ped*	
NEMA Hold	

Sync Phases

C + E + FUNCTION #

Row		F
0	Free Lag	_2_4_6_8
1	Plan 1 - Lag	_2_4_6_8
2	Plan 2 - Lag	
3	Plan 3 - Lag	_2_4_6_8
4	Plan 4 - Lag	
5	Plan 5 - Lag	
6	Plan 6 - Lag	
7	Plan 7 - Lag	
8	Plan 8 - Lag	
9	Plan 9 - Lag	
A	Coord Max *	
B	Coord Lag *	
C		
D		
E		
F		

Lag Phases <C Page>

C + F + FUNCTION #

Transition Type	0

TBC Transition
C + D + D

Plan Select
1 thru 9 = Coordination Plan 1 thru 9
14 or E = Free
15 or F = Flash

Transition Type
0 = Shortway
Non-zero = Lengthen

NTERSECTION: KRAMER @ LINDA VISTA

223 ogram

Group Assignment: 4056
Field Master Assignment: NONE

N/S Street Name: LINDA VISTA
E/W Street Name: KRAMER

Last Database Change:
System Ref. Number: 462

N

Row	Column # ---> / Phase # --->	1	2	3	4	5	6	7	8
		Linda Vista Rd			Kramer St		Linda Vista Rd		Kramer St
0	Ped Walk		7		7		7		7
1	Ped FDW		10		17		10		19
2	Min Green	4	10		4	4	10		4
3	Type 3 Limit								
4	Add/Veh								
5	Veh Extn	2.0	4.4		2.0	2.0	4.4		2.0
6	Max Gap	2.0	4.4		2.0	2.0	4.4		2.0
7	Min Gap	2.0	0.2		2.0	2.0	0.2		2.0
8	Max Limit	30	60		40	30	60		40
9	Max Limit 2								
A	Bus Adv								
B	Call to Phs								
C	Reduce By		0.1				0.1		
D	Every		0.7				0.7		
E	Yellow	3.4	4.2		3.9	3.4	4.5		3.9
F	Red Clear	1.0	1.0		1.0	1.0	1.0		1.0
	Grade								

Phase Timing - Bank 1
F + Phase + Row

<F Page>

	E
RR-1 Delay	
RR-1 Clear	
EV-A Delay	0
EV-A Clear	0
EV-B Delay	
EV-B Clear	
EV-C Delay	0
EV-C Clear	0
EV-D Delay	
EV-D Clear	
RR-2 Delay	
RR-2 Clear	
View EV Delay	---
View EV Clear	---
View RR Delay	---
View RR Clear	---

Preempt Timing
F + E + Row

	F	Row
Permit	12_456_8	0
Red Lock		1
Yellow Lock		2
Min Recall	_2___6__	3
Ped Recall		4
Peds (View)	_2_4_6_8	5
Rest In Walk		6
Red Rest		7
Dbl Entry	___4___8	8
Max Recall		9
Soft Recall		A
Max 2		B
Cond Serv		C
Ped Lock	12345678	D
Yellow Start	_2___6__	E
1st Phases	___4___8	F

Phase Functions <F Page>
F + F + Row

Max Initial	0
Red Revert	5.0
All Red Start	0.0

F + 0 + E
F + 0 + F
F + C + O

Start / Revert Times

Drop Number	12
Zone Number	12
Area Number	5
Area Address	54
QuicNet Channel	COM44:

C + 0 + 0
C + 0 + 1
C + 0 + 2
C + 0 + 3
(QuicNet)

Communication Addresses

Overlap Timing

	Row	9 Green Clear	C Yellow Change	D Red Clear	0 Load-Switch #
Overlap A	A				
Overlap B	B				
Overlap C	C				
Overlap D	D				

<F Page>
F + COLOR +

<D Page>
D + 0 + OVERLAP

Manual Plan	0
Manual Offset	0

C + A + 1
C + B + 1

Manual Selection

Manual Plan
0 = Automatic
1-9 = Plan 1-9
14 = Free
15 = Flash

Manual Offset
0 = Automatic
1 = Offset A
2 = Offset B
3 = Offset C

C + F + O

	F	Row
Free Lag	_2_4_6_8	0

Lag Phases <C Page>

Downtime Flash	255	(minutes)

Downtime Before Auto Manual Flash
F + 0 +8

Disable Ports	_234____

Disable Communication Ports
D + D + 9

Timing Sheet By: JS2
Approved By: FLG
Drawing Number: 27945-13-0
Timing Implemented On: 6/1/10

INTERSECTION: KRAMER @ LINDA VISTA

Row	Time	Function	Day of Week	Column F Phases/Bits
0	00 : 01	E	1234567	1_____
1	:			
2	:			
3	:			
4	:			
5	:			
6	:			
7	:			
8	:			
9	:			
A	:			
B	:			
C	:			
D	:			
E	:			
F	:			

TOD Function

7 + ROW

<D Page>

D + F + ROW

T.O.D. Functions
0 = Permitted Phases
1 = Red Lock
2 = Yellow Lock
3 = Veh Min Recall
4 = Ped Recall
5 =
6 = Rest In Walk
7 = Red Rest
8 = Double Entry
9 = Veh Max Recall
A = Veh Soft Recall
B = Maximum 2
C = Conditional Service
D = Free Lag Phases
E = Bit 1 - Local Override
Bit 2 - Phase Bank 2
Bit 3 - Phase Bank 3
Bit 4 - Disable Detector OFF Monitor
Bit 7 - Detector Count Monitor
Bit 8 - Real Time Split Monitor
F = Output Bits 1 thru 4

Row		F
0		
1	RR Overlap A - Phases	
2	RR Overlap B - Phases	
3	RR Overlap C - Phases	
4	RR Overlap D - Phases	
5	Ped 2P	_2_____
6	Ped 6P	_____6__
7	Ped 4P	___4____
8	Ped 8P	_____8
9	Yellow Flash Phases	
A	Overlap A - Phases	
B	Overlap B - Phases	
C	Overlap C - Phases	
D	Overlap D - Phases	
E	Restricted Phases	
F	Assign 5 Outputs	

Configuration

<E Page>

E + F + ROW

Day of Week

1 = Sunday
2 = Monday
3 = Tuesday
4 = Wednesday
5 = Thursday
6 = Friday
7 = Saturday

Row		E
0	Exclusive Phases	
1	RR-1 Clear Phases	
2	RR-2 Clear Phases	
3	RR-2 Limited Service	
4	Prot / Perm Phases	
5	Overlap A - Green Omit	
6	Overlap B - Green Omit	
7	Overlap C - Green Omit	
8	Overlap D - Green Omit	
9	Overlap Yellow Flash	
A	EV-A Phases	_2_____
B	EV-B Phases	
C	EV-C Phases	_____6__
D	EV-D Phases	
E	Extra 1 Config. Bits	1_345___
F	IC Select (Interconnect)	_2_____

Configuration

For access, set F + 9 + E = 1

E + E + ROW

Extra 1 Flags
1 = TBC Type 1
2 = NEMA Ext. Coord
3 = Auto Daylight Savings
4 = EV Advance
5 = Remote Download
6 = Special Event
7 = Pretimed Operation
8 = Split Ring Operation

IC Select Flags
1 =
2 = Modem
3 = 7-Wire Slave
4 = Flash / Free
5 =
6 = Simplex Master
7 = 7-Wire Master
8 = Offset Interrupter

Assign 5 Outputs
1 = Right Turn Overlap
2 = TOD Outputs
3 = EV Beacon - Steady
4 = EV Beacon - Flashing
5 = Special Event Outputs
6 = Phase 3 & 7 Ped
7 = Advanced Warning Sign
8 =

Time and Date

8-0 Hour, Minute, Day-of-Week
8-1 Day-of-Month, Year, Month
8-F Seconds

Disable Parity	0	D+B+0

Dial-Up Telephone Communications

(If set to a non-zero value, parity will be disabled)

Program Information

C + C + 0 = program
C + C + F = version

Remote Download

C + 0 + 4 = 1 -255
w/ E + E + E bit 5 on

Row	1 Delay	3 Carry-over
0		
1		1.8
2		
3		
4		
5		
6		
7		
8		
9		
A		
B		
C		
D		
E	---	---
F	---	---

Detector Name	332 Input File	Detector Number
	1I1	14
	2I2U	1
	2I2L	5
	2I3U	21
	2I3L	25
	2I4	9
	3I5	16
	4I6U	3
	4I6L	7
	4I7U	23
	4I7L	27
	4I8	11
	1I9U	18
	3I9L	20
---	---	---
---	---	---

Row	2 Delay	4 Carry-over
0		
1		1.8
2		
3		
4		
5		
6		
7		
8		
9		
A		
B		
C		
D		
E	---	---
F	---	---

Detector Name	332 Input File	Detector Number
	5J1	13
	6J2U	2
	6J2L	6
	6J3U	22
	6J3L	26
	6J4	10
	7J5	15
	8J6U	4
	8J6L	8
	8J7U	24
	8J7L	28
	8J8	12
	5J9U	17
	7J9L	19
---	---	---
---	---	---

Detector Delay & Carryover <D Page>

D + X (across) + ROW

Row	Detector Numbers	E
A	1 2 3 4 5 6 7 8	12345678
B	9 10 11 12 -- -- -- --	1234____
C	13 14 15 16 17 18 19 20	12345678
D	-- -- -- -- 21 22 23 24	____5678
E	-- -- -- -- -- -- -- --	1234____
F	-- 25 26 27 28 -- -- --	_2345___

Active Detectors <D Page>

Row		0 Detector #
0		
1	System Det. # 1	
2	System Det. # 2	
3	System Det. # 3	
4	System Det. # 4	
5	System Det. # 5	
6	System Det. # 6	
7	System Det. # 7	
8	System Det. # 8	

System Detectors <D Page>

Max ON (min)	5	D+A+E
Max OFF (min)	60	D+A+F

Detector Failure Monitor

Phase Number		F+C+1
Time Before Yellow		F+C+3

Advance Warning Beacon - Sign 1

Phase Number		F+D+1
Time Before Yellow		F+D+3

Advance Warning Beacon - Sign 2

Long Failure	0.5	F+0+6
Short Failure	0.5	F+0+7

Power Cycle Correction (Default = 0.5)

INTERSECTION: KRAMER @ LINDA VISTA

223 Program

Coordination Timing By: KH&A
Implemented On: 2/3/2010

Row	Column # --->	Plan 1	2	3	4	5	6	7	8	9
	Plan Name --->				AM	PM				
0	Cycle Length				90	110				
1	Phase 1 - ForceOff				53	55				
2	Phase 2 - ForceOff				0	0				
3	Phase 3 - ForceOff									
4	Phase 4 - ForceOff				39	40				
5	Phase 5 - ForceOff				52	55				
6	Phase 6 - ForceOff				0	0				
7	Phase 7 - ForceOff									
8	Phase 8 - ForceOff				39	40				
9	Ring Offset									
A	Offset A				4	62 ~~42~~				
B	Offset B									
C	Offset C									
D	Permissive				10	11				
E	Hold Release				255	255				
F	Ped Shift				0	0				

Coordination <C Page>

C + Plan + ROW

FOR OBSERVATION ONLY

Master Plan	C + A + 2
Current Plan	C + A + 3
Next Plan	C + A + 4
T.O.D. Plan	C + A + 5
Master Cycle	C + A + 0
Ring A Cycle	C + B + 0
Ring B Cycle	C + D + 0
Min Cycle	C + A + E
Max Cycle	C + B + E

Row	Time	Plan	Offset	Day of Week
0	07 : 00	4	A	_23456_
1	09 : 00	E	A	1234567
2	14 : 30	5	A	_23456_
3	17 : 00	E	A	1234567
4	:			
5	:			
6	:			
7	:			
8	:			
9	:			
A	:			
B	:			
C	:			
D	:			
E	:			
F	:			

TOD Coordination

<9 Key with C+0+9=1>

	E	Row		F
		0	Free Lag	_2_4_6_8
Plan 1		1	Plan 1 - Lag	
Plan 2		2	Plan 2 - Lag	
Plan 3		3	Plan 3 - Lag	
Plan 4	_2__6__	4	Plan 4 - Lag	_2_4_6_8
Plan 5	_2__6__	5	Plan 5 - Lag	_2_4_6_8
Plan 6		6	Plan 6 - Lag	
Plan 7		7	Plan 7 - Lag	
Plan 8		8	Plan 8 - Lag	
Plan 9		9	Plan 9 - Lag	
Coord Ped*		A	Coord Max *	
NEMA Hold		B	Coord Lag *	
		C		
		D		
		E		
		F		

Sync Phases **Lag Phases** <C Page>

C + E + FUNCTION # C + F + FUNCTION #

Transition Type	0

TBC Transition
C + D + D

Plan Select
1 thru 9 = Coordination Plan 1 thru 9
14 or E = Free
15 or F = Flash

Transition Type
0 = Shortway
Non-zero = Lengthen

FIELD MASTER

210

COORDINATION TIMING

Feature		Plan 1	2	3	4	5	6	7	8	9	
Cycle	0	98	96	120							0
Plan Up	1										1
Plan Down	2										2

Keystrokes: C - Plan - Feature

TIME BASE COORDINATION

EVENTS 1 - 16

	Time	Plan	Offset	Day of Week S 1	M 2	T 3	W 4	T 5	F 6	S 7
0	0630	1	A		X	X	X	X	X	
1	0900	2	A	X						X
2	1030	2	A		X	X	X	X	X	
3	1330	3	A		X	X	X	X	X	
4	1800	2	A		X	X	X	X	X	
5	1900	E	A	X						X
6	2000	E	A	X	X	X	X	X	X	X
7										
8										
9										
A										
B										
C										
D										
E										
F										

Keystrokes: 9 - Event #

Plan 1-9 TBC Coordination
D Traffic Responsive
E Free (Non-coordinated)
F Flash

Number of Locals
(D-0-0) = 9
Submaster Address
(C-0-0) = ____
Manual Plan
(C-A-1) = 0

Auto = 0
Free = 14
Flash = 15

8-0 Hour, Minute, Day of Week
8-1 Day of Month, Year, Month
8-F Seconds

0 0
1 0
2 0
3 0
4 0
5 0
6 0
7 0
8 0
9 0

A			b
3	0	4	A

LEVEL PLAN OFFSET

LEVEL:
1=Manual Control
2=Central Master Control
3=Time of Day
4=Traffic Responsive
5=Backup Plan

PLAN:
[See above]

OFFSET:
A=Inbound
B=Outbound
C=Average

Master Controller is at LINDA VISTA RD & MORENA BL.

SYSTEM NAME	MORENA

LOCAL INTERSECTIONS

	Address	Intersection Name
C F 1	1	FRIARS RD. & NAPA ST.
	2	RILEY ST. & NAPA ST.
	3	LINDA VISTA RD & NAPA ST.
	4	LINDA VISTA RD & MORENA BL.
	5	MORENA BL & NAPA ST. / SHERMAN ST.
	6	MORENA BL & W. MORENA BL (5)
	7	BUENOS AV. & MORENA BL.
	8	BUENOS AV & W. MORENA BL.
C F 2	9	VEGA ST & W. MORENA BL.
	10	
	11	
	12	
	13	
	14	
	15	
	16	
C F 3	17	
	18	
	19	
	20	
	21	
	22	
	23	
	24	
C F 4	25	
	26	
	27	
	28	
	29	
	30	
	31	
	32	

LOCAL RESPONSE DISPLAY

Local Response 1 - 8 (C-F-1)

0 1 2 3 4 5 6 7 8 9

F			1
C	0	4	8

MASTER TIMIMG

KEY	CONTROLLER NUMBER
C-F-1	1 - 8
C-F-2	9 - 16
C-F-3	17 - 24
C-F-4	25 - 32

ITERSECTION: LINDA VISTA RD @ MORENA BL

223 [illegible] ram

(1)

Group Assignment: NONE
Field Master Assignment: NONE

N/S Street Name: MORENA BL
E/W Street Name: LINDA VISTA RD

Last Database Change:
System Ref. Number: 794

N

Row	Column # --->	1	2	3	4	5	6	7	8
		Phase							
			Morena Bl				Morena Bl		Linda Vista Rd
	Phase # --->	1	2	3	4	5	6	7	8
			↑				↓		↙
0	Ped Walk								
1	Ped FDW								
2	Min Green		10				10		7
3	Type 3 Limit								
4	Add/Veh								
5	Veh Extn		3.9				4.7		3.6
6	Max Gap		3.9				4.7		3.6
7	Min Gap		0.2				0.2		0.2
8	Max Limit		40				40		40
9	Max Limit 2								
A	Bus Adv								
B	Call to Phs								
C	Reduce By		0.1				0.1		0.1
D	Every		0.8				0.7		0.9
E	Yellow		4.5				4.3		4.2
F	Red Clear		1.0				1.0		(1) 4.5 ~~2.0~~
	Grade								

Phase Timing - Bank 1
F + Phase + Row

<F Page>
(1) MRS 09/26/13

	E
RR-1 Delay	
RR-1 Clear	
EV-A Delay	0
EV-A Clear	0
EV-B Delay	
EV-B Clear	
EV-C Delay	0
EV-C Clear	0
EV-D Delay	0
EV-D Clear	0
RR-2 Delay	
RR-2 Clear	
View EV Delay	---
View EV Clear	---
View RR Delay	---
View RR Clear	---

Preempt Timing
F + E + Row

Row		F
0	Permit	_2___6_8
1	Red Lock	
2	Yellow Lock	
3	Min Recall	_2___6__
4	Ped Recall	
5	Peds (View)	
6	Rest In Walk	
7	Red Rest	
8	Dbl Entry	
9	Max Recall	
A	Soft Recall	
B	Max 2	
C	Cond Serv	
D	Ped Lock	12345678
E	Yellow Start	_2___6__
F	1st Phases	_____8

Phase Functions <F Page>
F + F + Row

Max Initial	0	F + 0 + E
Red Revert	5.0	F + 0 + F
All Red Start	0.0	F + C + O

Start / Revert Times

Drop Number	1	C + 0 + 0
Zone Number	1	C + 0 + 1
Area Number	5	C + 0 + 2
Area Address	78	C + 0 + 3
QuicNet Channel	COM51:	(QuicNet)

Communication Addresses

C + F + O	F	Row
Free Lag	_2___6_8	0

Lag Phases <C Page>

Overlap Timing

	Row	9 Green Clear	C Yellow Change	D Red Clear	0 Load-Switch #
Overlap A	A				
Overlap B	B				
Overlap C	C				
Overlap D	D				

<F Page>
F + COLOR +

<D Page>
D + 0 + OVERLAP

Manual Plan	0	C + A + 1
Manual Offset	0	C + B + 1

Manual Selection

Manual Plan
0 = Automatic
1-9 = Plan 1-9
14 = Free
15 = Flash

Manual Offset
0 = Automatic
1 = Offset A
2 = Offset B
3 = Offset C

Downtime Flash	255	(minutes)

Downtime Before Auto Manual Flash
F + 0 +8

Disable Ports	_234____

Disable Communication Ports
D + D + 9

Timing Sheet By: JS2
Approved By: FLG
Drawing Number: 680119-D
Timing Implemented On: 6/1/10

INTERSECTION: LINDA VISTA RD @ MORENA BL

Row	Time	Function	Day of Week	Column F Phases/Bits
0	00 : 01	E	1234567	1_____
1	:			
2	:			
3	:			
4	:			
5	:			
6	:			
7	:			
8	:			
9	:			
A	:			
B	:			
C	:			
D	:			
E	:			
F	:			

TOD Function

7 + ROW

<D Page>

D + F + ROW

T.O.D. Functions
0 = Permitted Phases
1 = Red Lock
2 = Yellow Lock
3 = Veh Min Recall
4 = Ped Recall
5 =
6 = Rest In Walk
7 = Red Rest
8 = Double Entry
9 = Veh Max Recall
A = Veh Soft Recall
B = Maximum 2
C = Conditional Service
D = Free Lag Phases
E = Bit 1 - Local Override
Bit 2 - Phase Bank 2
Bit 3 - Phase Bank 3
Bit 4 - Disable Detector OFF Monitor
Bit 7 - Detector Count Monitor
Bit 8 - Real Time Split Monitor
F = Output Bits 1 thru 4

Row		F
0		
1	RR Overlap A - Phases	
2	RR Overlap B - Phases	
3	RR Overlap C - Phases	
4	RR Overlap D - Phases	
5	Ped 2P	
6	Ped 6P	
7	Ped 4P	
8	Ped 8P	
9	Yellow Flash Phases	
A	Overlap A - Phases	
B	Overlap B - Phases	
C	Overlap C - Phases	
D	Overlap D - Phases	
E	Restricted Phases	
F	Assign 5 Outputs	

Configuration

<E Page>

E + F + ROW

Day of Week

1 = Sunday
2 = Monday
3 = Tuesday
4 = Wednesday
5 = Thursday
6 = Friday
7 = Saturday

Row		E
0	Exclusive Phases	
1	RR-1 Clear Phases	
2	RR-2 Clear Phases	
3	RR-2 Limited Service	
4	Prot / Perm Phases	
5	Overlap A - Green Omit	
6	Overlap B - Green Omit	
7	Overlap C - Green Omit	
8	Overlap D - Green Omit	
9	Overlap Yellow Flash	
A	EV-A Phases	_2_____
B	EV-B Phases	
C	EV-C Phases	_____6__
D	EV-D Phases	_____8
E	Extra 1 Config. Bits	1_345___
F	IC Select (Interconnect)	_2_____

Configuration

For access, set F + 9 + E = 1

E + E + ROW

Extra 1 Flags
1 = TBC Type 1
2 = NEMA Ext. Coord
3 = Auto Daylight Savings
4 = EV Advance
5 = Remote Download
6 = Special Event
7 = Pretimed Operation
8 = Split Ring Operation

IC Select Flags
1 =
2 = Modem
3 = 7-Wire Slave
4 = Flash / Free
5 =
6 = Simplex Master
7 = 7-Wire Master
8 = Offset Interrupter

Assign 5 Outputs
1 = Right Turn Overlap
2 = TOD Outputs
3 = EV Beacon - Steady
4 = EV Beacon - Flashing
5 = Special Event Outputs
6 = Phase 3 & 7 Ped
7 = Advanced Warning Sign
8 =

Time and Date

8-0 Hour, Minute, Day-of-Week
8-1 Day-of-Month, Year, Month
8-F Seconds

Disable Parity	0	D+B+0

Dial-Up Telephone Communications
(If set to a non-zero value, parity will be disabled)

Program Information

C + C + 0 = program
C + C + F = version

Remote Download

C + 0 + 4 = 1 -255
w/ E + E + E bit 5 on

Row	1 Delay	3 Carry-over
0		
1		1.8
2		1.8
3		
4		
5		
6		
7		
8		
9		
A		
B		
C		
D		
E	---	---
F	---	---

Detector Name	332 Input File	Detector Number
	1I1	14
	2I2U	1
	2I2L	5
	2I3U	21
	2I3L	25
	2I4	9
	3I5	16
	4I6U	3
	4I6L	7
	4I7U	23
	4I7L	27
	4I8	11
	1I9U	18
	3I9L	20
---	---	---
---	---	---

Row	2 Delay	4 Carry-over
0		
1		1.8
2		1.8
3		
4		
5		
6		
7		1.8
8		
9		
A		
B		
C		
D		
E	---	---
F	---	---

Detector Name	332 Input File	Detector Number
	5J1	13
	6J2U	2
	6J2L	6
	6J3U	22
	6J3L	26
	6J4	10
	7J5	15
	8J6U	4
	8J6L	8
	8J7U	24
	8J7L	28
	8J8	12
	5J9U	17
	7J9L	19
---	---	---
---	---	---

Detector Delay & Carryover <D Page>

D + X (across) + ROW

Row	Detector Numbers	E
A	1 2 3 4 5 6 7 8	12345678
B	9 10 11 12 -- -- -- --	1234____
C	13 14 15 16 17 18 19 20	12345678
D	-- -- -- -- 21 22 23 24	____5678
E	-- -- -- -- -- -- -- --	1234____
F	-- 25 26 27 28 -- -- --	_2345___

Active Detectors <D Page>

Row		0 Detector #
0		
1	System Det. # 1	
2	System Det. # 2	
3	System Det. # 3	
4	System Det. # 4	
5	System Det. # 5	
6	System Det. # 6	
7	System Det. # 7	
8	System Det. # 8	

System Detectors <D Page>

Max ON (min)	5	D+A+E
Max OFF (min)	60	D+A+F

Detector Failure Monitor

Phase Number		F+C+1
Time Before Yellow		F+C+3

Advance Warning Beacon - Sign 1

Phase Number		F+D+1
Time Before Yellow		F+D+3

Advance Warning Beacon - Sign 2

Long Failure	0.5	F+0+6
Short Failure	0.5	F+0+7

Power Cycle Correction (Default = 0.5)

INTERSECTION: LINDA VISTA RD @ MORENA BL

223 Program

Coordination Timing By: KH&A
Implemented On: 2/3/2010

Row	Column # --->	Plan 1	2	3	4	5	6	7	8	9
	Plan Name --->		MD/WE			AM	PM			
0	Cycle Length		48			55	68			
1	Phase 1 - ForceOff									
2	Phase 2 - ForceOff		0			0	0			
3	Phase 3 - ForceOff									
4	Phase 4 - ForceOff									
5	Phase 5 - ForceOff									
6	Phase 6 - ForceOff		0			0	0			
7	Phase 7 - ForceOff									
8	Phase 8 - ForceOff		26			29	37			
9	Ring Offset									
A	Offset A		17			5	15			
B	Offset B									
C	Offset C									
D	Permissive		5			6	7			
E	Hold Release		255			255	255			
F	Ped Shift		0			0	0			

Coordination <C Page>

C + Plan + ROW

FOR OBSERVATION ONLY

Master Plan	C + A + 2
Current Plan	C + A + 3
Next Plan	C + A + 4
T.O.D. Plan	C + A + 5
Master Cycle	C + A + 0
Ring A Cycle	C + B + 0
Ring B Cycle	C + D + 0
Min Cycle	C + A + E
Max Cycle	C + B + E

Row	Time	Plan	Offset	Day of Week
0	06 : 30	5	A	23456
1	09 : 00	2	A	1 7
2	10 : 30	2	A	23456
3	13 : 30	6	A	23456
4	18 : 00	2	A	23456
5	19 : 00	E	A	1 7
6	20 : 00	E	A	1234567
7	:			
8	:			
9	:			
A	:			
B	:			
C	:			
D	:			
E	:			
F	:			

TOD Coordination

<9 Key with C+0+9=1>

	E
Plan 1	
Plan 2	2 6
Plan 3	
Plan 4	
Plan 5	2 6
Plan 6	2 6
Plan 7	
Plan 8	
Plan 9	
Coord Ped*	
NEMA Hold	

Sync Phases

C + E + FUNCTION #

Row		F
0	Free Lag	2 6 8
1	Plan 1 - Lag	
2	Plan 2 - Lag	2 6 8
3	Plan 3 - Lag	
4	Plan 4 - Lag	
5	Plan 5 - Lag	2 6 8
6	Plan 6 - Lag	2 6 8
7	Plan 7 - Lag	
8	Plan 8 - Lag	
9	Plan 9 - Lag	
A	Coord Max *	
B	Coord Lag *	
C		
D		
E		
F		

Lag Phases <C Page>

C + F + FUNCTION #

Transition Type	0

TBC Transition
C + D + D

Plan Select
1 thru 9 = Coordination Plan 1 thru 9
14 or E = Free
15 or F = Flash

Transition Type
0 = Shortway
Non-zero = Lengthen

INTERSECTION: LINDA VISTA RD @ MARIAN/MILDRED

223 [illegible]gram

(2A)

Group Assignment: NONE
Field Master Assignment: NONE

N/S Street Name: MILDRED
E/W Street Name: LINDA VISTA

Last Database Change:
System Ref. Number: 882

N

Row	Column # --->	1	2	3	4	5	6	7	8
	Phase # --->	1	2	3	4	5	6	7	8
		Linda Vista Rd			Marian/Mildred		Linda Vista Rd		
0	Ped Walk		7		7		7		
1	Ped FDW		10		22		15		
2	Min Green	4	10		7	4	10		
3	Type 3 Limit								
4	Add/Veh		1.6				1.6		
5	Veh Extn	2.0	6.5		2.0	2.0	5.3		
6	Max Gap	2.0	6.5		2.0	2.0	5.3		
7	Min Gap	2.0	2.0		2.0	2.0	2.0		
8	Max Limit	30	60		40	40	60		
9	Max Limit 2								
A	Bus Adv								
B	Call to Phs								
C	Reduce By		0.1				0.1		
D	Every		0.7				0.9		
E	Yellow	3.4	3.9		3.9	3.4	4.6		
F	Red Clear	1.0	1.0		1.0	1.0	1.0		
	Grade								

4+5

Phase Timing - Bank 1
F + Phase + Row

<F Page>

	E
RR-1 Delay	
RR-1 Clear	
EV-A Delay	
EV-A Clear	
EV-B Delay	
EV-B Clear	
EV-C Delay	0
EV-C Clear	0
EV-D Delay	
EV-D Clear	
RR-2 Delay	
RR-2 Clear	
View EV Delay	---
View EV Clear	---
View RR Delay	---
View RR Clear	---

Preempt Timing
F + E + Row

	F	Row
Permit	12_456__	0
Red Lock		1
Yellow Lock		2
Min Recall	_2___6__	3
Ped Recall		4
Peds (View)	_2_4_6__	5
Rest In Walk		6
Red Rest		7
Dbl Entry		8
Max Recall		9
Soft Recall		A
Max 2		B
Cond Serv		C
Ped Lock	12345678	D
Yellow Start	_2___6__	E
1st Phases	___4____	F

Phase Functions <F Page>
F + F + Row

Max Initial	28	F + 0 + E
Red Revert	5.0	F + 0 + F
All Red Start	0.0	F + C + O

Start / Revert Times

Drop Number	7	C + 0 + 0
Zone Number	7	C + 0 + 1
Area Number	5	C + 0 + 2
Area Address	104	C + 0 + 3
QuicNet Channel	COM51:	(QuicNet)

Communication Addresses

Overlap Timing

	Row	9 Green Clear	C Yellow Change	D Red Clear	0 Load-Switch #
Overlap A	A				
Overlap B	B				
Overlap C	C				
Overlap D	D				

<F Page>
F + COLOR +

<D Page>
D + 0 + OVERLAP

Manual Plan	0	C + A + 1
Manual Offset	0	C + B + 1

Manual Selection

Manual Plan
0 = Automatic
1-9 = Plan 1-9
14 = Free
15 = Flash

Manual Offset
0 = Automatic
1 = Offset A
2 = Offset B
3 = Offset C

C + F + O	F	Row
Free Lag	_2_4_6__	0

Lag Phases <C Page>

Downtime Flash	255	(minutes)

Downtime Before Auto Manual Flash
F + 0 + 8

Disable Ports	_234____

Disable Communication Ports
D + D + 9

Timing Sheet By: JS2
Approved By: FLG
Drawing Number: 29468-2
Timing Implemented On: 6/1/10

INTERSECTION: LINDA VISTA RD @ MARIAN/MILDRED

Row	Time	Function	Day of Week	Column F Phases/Bits
0	00 : 01	E	1234567	1_____
1	:			
2	:			
3	:			
4	:			
5	:			
6	:			
7	:			
8	:			
9	:			
A	:			
B	:			
C	:			
D	:			
E	:			
F	:			

TOD Function

7 + ROW

<D Page>

D + F + ROW

T.O.D. Functions
0 = Permitted Phases
1 = Red Lock
2 = Yellow Lock
3 = Veh Min Recall
4 = Ped Recall
5 =
6 = Rest In Walk
7 = Red Rest
8 = Double Entry
9 = Veh Max Recall
A = Veh Soft Recall
B = Maximum 2
C = Conditional Service
D = Free Lag Phases
E = Bit 1 - Local Override
Bit 2 - Phase Bank 2
Bit 3 - Phase Bank 3
Bit 4 - Disable Detector OFF Monitor
Bit 7 - Detector Count Monitor
Bit 8 - Real Time Split Monitor
F = Output Bits 1 thru 4

Row		F
0		
1	RR Overlap A - Phases	
2	RR Overlap B - Phases	
3	RR Overlap C - Phases	
4	RR Overlap D - Phases	
5	Ped 2P	_2_____
6	Ped 6P	____6__
7	Ped 4P	___4___
8	Ped 8P	
9	Yellow Flash Phases	
A	Overlap A - Phases	____5__
B	Overlap B - Phases	
C	Overlap C - Phases	
D	Overlap D - Phases	
E	Restricted Phases	
F	Assign 5 Outputs	1_____

Configuration

E + F + ROW

<E Page>

Day of Week

1 = Sunday
2 = Monday
3 = Tuesday
4 = Wednesday
5 = Thursday
6 = Friday
7 = Saturday

Assign 5 Outputs
1 = Right Turn Overlap
2 = TOD Outputs
3 = EV Beacon - Steady
4 = EV Beacon - Flashing
5 = Special Event Outputs
6 = Phase 3 & 7 Ped
7 = Advanced Warning Sign
8 =

Row		E
0	Exclusive Phases	
1	RR-1 Clear Phases	
2	RR-2 Clear Phases	
3	RR-2 Limited Service	
4	Prot / Perm Phases	
5	Overlap A - Green Omit	
6	Overlap B - Green Omit	
7	Overlap C - Green Omit	
8	Overlap D - Green Omit	
9	Overlap Yellow Flash	
A	EV-A Phases	
B	EV-B Phases	
C	EV-C Phases	1____6__
D	EV-D Phases	
E	Extra 1 Config. Bits	1_345___
F	IC Select (Interconnect)	_2_____

Configuration

For access, set F + 9 + E = 1

E + E + ROW

Extra 1 Flags
1 = TBC Type 1
2 = NEMA Ext. Coord
3 = Auto Daylight Savings
4 = EV Advance
5 = Remote Download
6 = Special Event
7 = Pretimed Operation
8 = Split Ring Operation

IC Select Flags
1 =
2 = Modem
3 = 7-Wire Slave
4 = Flash / Free
5 =
6 = Simplex Master
7 = 7-Wire Master
8 = Offset Interrupter

Time and Date

8-0 Hour, Minute, Day-of-Week
8-1 Day-of-Month, Year, Month
8-F Seconds

Disable Parity	0	D+B+0

Dial-Up Telephone Communications
(If set to a non-zero value, parity will be disabled)

Program Information

C + C + 0 = program
C + C + F = version

Remote Download

C + 0 + 4 = 1 -255
w/ E + E + E bit 5 on

ERSECTION: LINDA VISTA RD @ MARIAN/MIL ED

223 Program

Row	1 Delay	3 Carry-over
0		
1		
2		
3		
4		
5		
6		
7	10.0	
8		
9		
A	10.0	
B		
C		
D		
E	---	---
F	---	---

Detector Name	332 Input File	Detector Number
	1I1	14
	2I2U	1
	2I2L	5
	2I3U	21
	2I3L	25
	2I4	9
	3I5	16
	4I6U	3
	4I6L	7
	4I7U	23
	4I7L	27
	4I8	11
	1I9U	18
	3I9L	20
---	---	---
---	---	---

Row	2 Delay	4 Carry-over
0		
1		
2		
3		
4		
5		
6		
7		
8		
9		
A		
B		
C		
D		
E	---	---
F	---	---

Detector Name	332 Input File	Detector Number
	5J1	13
	6J2U	2
	6J2L	6
	6J3U	22
	6J3L	26
	6J4	10
	7J5	15
	8J6U	4
	8J6L	8
	8J7U	24
	8J7L	28
	8J8	12
	5J9U	17
	7J9L	19
---	---	---
---	---	---

Detector Delay & Carryover <D Page>

D + X (across) + ROW

Row	Detector Numbers	E
A	1 2 3 4 5 6 7 8	12345678
B	9 10 11 12 -- -- -- --	1234____
C	13 14 15 16 17 18 19 20	12345678
D	-- -- -- -- 21 22 23 24	____5678
E	-- -- -- -- -- -- -- --	1234____
F	-- 25 26 27 28 -- -- --	_2345___

Active Detectors <D Page>

Row		0 Detector #
0		
1	System Det. # 1	
2	System Det. # 2	
3	System Det. # 3	
4	System Det. # 4	
5	System Det. # 5	
6	System Det. # 6	
7	System Det. # 7	
8	System Det. # 8	

System Detectors <D Page>

Max ON (min)	5	D+A+E
Max OFF (min)	60	D+A+F

Detector Failure Monitor

Phase Number		F+C+1
Time Before Yellow		F+C+3

Advance Warning Beacon - Sign 1

Phase Number		F+D+1
Time Before Yellow		F+D+3

Advance Warning Beacon - Sign 2

Long Failure	0.5	F+0+6
Short Failure	0.5	F+0+7

Power Cycle Correction (Default = 0.5)

INTERSECTION: LINDA VISTA RD @ MARIAN/MILDRED

223 Program

Coordination Timing By: KH&A
Implemented On: 2/3/2010

Row	Column # --->	Plan 1	2	3	4	5	6	7	8	9
	Plan Name --->					AM	PM			
0	Cycle Length					110	136			
1	Phase 1 - ForceOff					47	58			
2	Phase 2 - ForceOff					0	0			
3	Phase 3 - ForceOff									
4	Phase 4 - ForceOff					31	44			
5	Phase 5 - ForceOff					80	86			
6	Phase 6 - ForceOff					0	0			
7	Phase 7 - ForceOff									
8	Phase 8 - ForceOff									
9	Ring Offset									
A	Offset A					8	127			
B	Offset B									
C	Offset C									
D	Permissive					11	14			
E	Hold Release					255	255			
F	Ped Shift					0	0			

Coordination <C Page>

C + Plan + ROW

FOR OBSERVATION ONLY

Master Plan	C + A + 2
Current Plan	C + A + 3
Next Plan	C + A + 4
T.O.D. Plan	C + A + 5
Master Cycle	C + A + 0
Ring A Cycle	C + B + 0
Ring B Cycle	C + D + 0
Min Cycle	C + A + E
Max Cycle	C + B + E

Row	Time	Plan	Offset	Day of Week
0	06 : 30	5	A	_23456_
1	09 : 00	E	A	1234567
2	13 : 30	6	A	_23456_
3	18 : 00	E	A	1234567
4	:			
5	:			
6	:			
7	:			
8	:			
9	:			
A	:			
B	:			
C	:			
D	:			
E	:			
F	:			

TOD Coordination

<9 Key with C+0+9=1>

	E
Plan 1	
Plan 2	
Plan 3	
Plan 4	
Plan 5	_2__6__
Plan 6	_2__6__
Plan 7	
Plan 8	
Plan 9	
Coord Ped*	
NEMA Hold	

Sync Phases

C + E + FUNCTION #

Row		F
0	Free Lag	_2_4_6__
1	Plan 1 - Lag	
2	Plan 2 - Lag	
3	Plan 3 - Lag	
4	Plan 4 - Lag	
5	Plan 5 - Lag	_2_4_6__
6	Plan 6 - Lag	_2_4_6__
7	Plan 7 - Lag	
8	Plan 8 - Lag	
9	Plan 9 - Lag	
A	Coord Max *	
B	Coord Lag *	
C		
D		
E		
F		

Lag Phases <C Page>

C + F + FUNCTION #

Transition Type	0

TBC Transition
C + D + D

Plan Select
1 thru 9 = Coordination
Plan 1 thru 9
14 or E = Free
15 or F = Flash

Transition Type
0 = Shortway
Non-zero = Lengthen

INTERSECTION: Linda Vista Rd & Marian Wy/Pacific Ridge Dwy

233 Program

Group Assignment:
Field Master Assignment:
System Reference Number:

N/S Street: Marian Wy/Pacific Ridge Dwy
E/W Street: Linda Vista Rd

Last Database Change:

Timing sheets by: JMV
Approved by:
Timing implemented on:

Row	Phase Numbers---->	1	2	3	4	5	6	7	8
		Linda Vista					Linda Vista	Marian	Pac Ridge Dwy
								OLA	
0	Ped Walk		7				7	7	
1	Ped FDW		16				19	20	
2	Min Green	4	7			4	7	4	4
3	Type 3 Disconnect								
4	Added per Vehicle								
5	Veh Extension	2.0	5.5			2.0	5.0	2.0	2.0
6	Max Gap	2.0	5.5			2.0	5.0	2.0	2.0
7	Min Gap	2.0	0.2			2.0	0.2	2.0	2.0
8	Max Limit	30	60			30	60	30	40
9	Max Limit 2								
A	Adv. / Delay Walk								
B	PE Min Ped FDW								
C	Cond Serv Check								
D	Reduce Every		0.6				0.6		
E	Yellow Change	3.4	3.9			3.4	4.0	3.9	3.9
F	Red Clear	1.0	1.0			1.0	1.0	1.0	1.0

Phase Timing - Bank 1 <F/1+Phase+Row>

	E
RR-1 Delay	
RR-1 Clear	
EV-A Delay	0
EV-A Clear	0
EV-B Delay	0
EV-B Clear	0
EV-C Delay	0
EV-C Clear	0
EV-D Delay	0
EV-D Clear	0
RR-2 Delay	
RR-2 Clear	
View EV Delay	- - -
View EV Clear	- - -
View RR Delay	- - -
View RR Clear	- - -

Preempt Timing <F/1+E+Row>

	F	Row
Permit	12__5678	0
Red Lock		1
Yellow Lock		2
Min Recall		3
Ped Recall		4
View Set Peds		5
Rest In Walk		6
Red Rest		7
Double Entry		8
Max Recall		9
Soft Recall	_2___6__	A
Max 2		B
Cond. Service		C
Man Cntrl Calls		D
Yellow Start	_2___6__	E
First Phases	_____7_	F

Phase Functions <F/1+F+Row>

Current Calculated Cycle Length: C/0 + B + F

	9	A	B	C	D
	- - -	- - -	- - -	- - -	- - -
Phase 1					
Phase 2					
Phase 3					
Phase 4					
Phase 5					
Phase 6					
Phase 7					
Phase 8					
Max Initial					
Alternate Walk					
Alternate FDW					
Alternate Initial					
Alternate Extension					

Alternate Timing <F/1+Column+Phase>

Drop Number	8	<C/0+0+0>
Zone Number	8	<C/0+0+1>
Area Number	5	<C/0+0+2>
Area Address	105	<C/0+0+3>
QuicNet Channel	Com51	(QuicNet)

Communication Addresses

Manual Plan
0 = Automatic
1-9 = Plan 1-9
14 = Free
15 = Flash

(Outputs specified in Assignable Outputs at E/127+A+E & F)

Exclusive Walk	0	<F/1+0+0>
Exclusive FDW	0	<F/1+0+1>
All Red Clear	0.0	<F/1+0+2>

Exclusive Ped Phase

Flash Start	0	<F/1+0+E>
Red Revert	5.0	<F/1+0+F>
All Red Start	0.0	<F/1+C+0>

Start / Revert Times

Manual Offset
0 = Automatic
1 = Offset A
2 = Offset B
3 = Offset C

Manual Plan	0	<C/0+A+1>
Manual Offset	0	<C/0+B+1>

Manual Selection

Free Lag	_2___6_8	<C/1+F+0>

How to Set Page Access Code:
F/1 -- C + 0 + F = 1
F + 9 + E = 1

Notes: 34886-20-D

INTERSECTION: Linda Vista Rd & Marian Wy/Pacific Ridge Dwy

233 Program

Row		Overlap 1	2	3	4	5	6	7	8
0	Load Switch Number								
1	Veh Set 1 - Phases	7							
2	Veh Set 2 - Phases								
3	Veh Set 3 - Phases								
4	Neg Veh Phases	12 5 8							
5	Neg Ped Phases	6							
6	Green Omit Phases	6							
7	Green Clear Omit Phs.								
8									
9									
A									
B									
C									
D	Green Clear								
E	Yellow Change	3.4							
F	Red Clear	1.0							

Overlap Assignments <E/29+Column+Row>

	F
Fast Green Flash Phase	
Green Flash Phases	
Flashing Walk Phases	
Guaranteed Passage	
Simultaneous Gap Term	
Sequential Timing	
Advance Walk Phases	
Delay Walk Phases	
External Recall	
Start-up Overlap Green	
Max Extension	
Inhibit Ped Reservice	
Semi-Actuated	
Start-up Overlap Yellow	
Start-up Vehicle Calls	
Start-up Ped Calls	

Specials <F/2+F+Row>

Row		E
0	Exclusive Phases	
1	RR-1 Clear Phases	
2	RR-2 Clear Phases	
3	RR-2 Limited Service	
4	Prot / Perm Phases	
5	Flash to PE Circuits	
6	Flash Entry Phases	
7	Disable Yellow Range	
8	Disable Ovp Yel Range	
9	Overlap Yellow Flash	
A	EV-A Phases	2 5
B	EV-B Phases	7
C	EV-C Phases	1 6
D	EV-D Phases	8
E	Extra 1 Config. Bits	1 345
F	IC Select (Interconnect)	2

Configuration <E/125+E+Row>

	F
Ext. Permit 1 Phases	
Ext. Permit 2 Phases	
Exclusive Ped Assign	
Preempt Non-Lock	12345678
Ped for 2P Output	2
Ped for 6P Output	6
Ped for 4P Output	7
Ped for 8P Output	
Yellow Flash Phases	
Low Priority A Phases	
Low Priority B Phases	
Low Priority C Phases	
Low Priority D Phases	
Restricted Phases	
Extra 2 Config. Bits	3

Configuration <E/125+F+Row>

	C
EV-A	
EV-B	
EV-C	
EV-D	
RR-1 *	- - -
RR-2 *	- - -
SE-1	0
SE-2	0

<E/125+C+Row>

Preemption Priority

(* RR-1 is always Highest, and RR-2 is always Second Highest)

	2
Phase 1	0
Phase 2	0
Phase 3	0
Phase 4	0
Phase 5	0
Phase 6	0
Phase 7	0
Phase 8	0

<C/5+2+Row>

Coordination Transition Minimums

Extra 1 Flags
1 = TBC Type 1
2 = NEMA Ext. Coord
3 = Auto Daylight Savings
4 = EV Advance
5 = Extended Status
6 = International Ped
7 = Flash - Clear Outputs
8 = Split Ring

IC Select Flags
1 =
2 = Modem
3 = 7-Wire Slave
4 = Flash / Free
5 =
6 = Simplex Master
7 = 7-Wire Master
8 = Offset Interrupter

Extra 2 Flags
1 = AWB During Initial
2 = LMU Installed
3 = Disable Min Walk
4 = QuicNet/4 System
5 = Ignore P/P on EV
6 =
7 = Reserved
8 =

Flash to PE & PE Non-Lock
1 = EV A 5 = RR 1
2 = EV B 6 = RR 2
3 = EV C 7 = SE 1
4 = EV D 8 = SE 2

8-0 Hour, Minute, Day-of-Week
8-1 Day-of-Month, Year, Month
8-F Seconds

Time and Date

Begin Month	0	<C/5+2+A>
Begin Week	0	<C/5+2+B>
End Month	0	<C/5+2+C>
End Week	0	<C/5+2+D>

Daylight Savings Time

Daylight Savings Date:
If set to all zeros, standard dates will be used.

INTERSECTION: Linda Vista Rd & Marian Wy/Pacific Ridge Dwy

233 Program

Row	Detector Name	0 C1 Pin Number	1 Attributes	2 Phase(s)	3 Assign	1 Delay	3 Carry-Over
0	2I2U	39					1.8
1	6J2U	40					1.8
2	4I6U	41					
3	8J6U	42					
4	2I2L	43					1.8
5	6J2L	44					1.8
6	4I6L	45					
7	8J6L	46					
8	2I4	47					
9	6J4	48					
A	4I8	49					
B	8J8	50					
C	5J1U	55					
D	1I1U	56					
E	7J5	57					
F	3I5	58					

Row	Detector Name	4 C1 Pin Number	5 Attributes	6 Phase(s)	7 Assign	2 Delay	4 Carry-Over
0	5J9U	59					
1	1I9U	60					
2	7J9L	61					
3	3I9L	62					
4	2I3U	63					1.8
5	6J3U	64					1.8
6	4I7U	65					
7	8J7U	66					
8	2 PPB	67					
9	6 PPB	68					
A	4 PPB	69		7			
B	8 PPB	70					
C	2I3L	76					
D	6J3L	77					
E	4I7L	78					
F	8J7L	79					

Detector Assignments <E/126+Column+Row> <D/0+Column+Row>

Detector Attributes
1 = Full Time Delay
2 = Ped Call
3 =
4 = Count
5 = Extension
6 = Type 3
7 = Calling
8 = Alternate

Det. Assignments
1 = Det. Set 1
2 = Det. Set 2
3 = Det. Set 3
4 =
5 =
6 = Failure - Min Recall
7 = Failure - Max Recall
8 = Report on Failure

Program Type:

	Ped / Phase / Overlap 1	2	3	4	5	6	7	8	Row
Walk									0
Don't Walk									1
Phase Green									2
Phase Yellow									3
Phase Red									4
Overlap Green	35								5
Overlap Yellow	37								6
Overlap Red									7

Redirect Phase Outputs <E/127+Column+Row>

Cabinet Type	30

<E/125+D+0>

Enable Redirection
(Enable Redirection = 30)

Max OFF (minutes)	20	<D/0+0+1>
Max ON (minutes)	60	<D/0+0+2>

Detector Failure Monitor

	D	Row
		0
Output Port 1		1
Output Port 2		2
Output Port 3		3
Output Port 4		4
Output Port 5		5
Output Port 6		6
Output Port 7		7

Dimming <E/125+D+Row>

	D
Number of Digits	
1 st Digit	
2 ed Digit	
3 ed Digit	
4 th Digit	
5 th Digit	
6 th Digit	
7 th Digit	
8 th Digit	
9 th Digit	
10 th Digit	
11 th Digit	
12 th Digit	
13 th Digit	
14 th Digit	
15 th Digit	

<C/5+D+Row>

Dial-Back Telephone Number

Disable Alarms
1 = Stop Time
2 = Flash Sense
3 = Keyboard Entry
4 = Manual Plan
5 = Police Control
6 = External Alarm
7 = Detector Failure
8 =

	B	Row
DELAY-A	1	A
DELAY-B	1	B
DELAY-C	0	C
DELAY-D	0	D
DELAY-E	0	E
DELAY-F	0	F

<D/0+B+Row> (seconds)

Delay Logic Times

Omit Alarm	#NAME?

<C/5+F+0>

Disable Alarm Reporting

Time	0	<C/5+C+0>

Redial Time (minutes)
(View Redial Timer at E/2+D+6)

INTERSECTION: Linda Vista Rd & Marian Wy/Pacific Ridge Dwy

Row	Time	Plan	Offset	Day of Week
0				
1				
2				
3				
4				
5				
6				
7				
8				
9				
A				
B				
C				
D				
E				
F				

TOD Coordination <9/0.1+Row>
(Bank 1)

Time	Funct.	Day of Week
:		
:		
:		
:		

TOD Function <7/0.1+Row>

Row	Column 4 Phases/Bits
0	
1	
2	
3	
4	
5	
6	
7	
8	
9	
A	
B	
C	
D	
E	
F	

<E/27+4+Row>

Row	Day	Year	Month	Holiday Type
0				
1				
2				
3				
4				
5				
6				
7				
8				
9				
A				
B				
C				
D				
E				
F				

Holiday Dates <8/1.1+Row>
(Bank 1)

Time	Plan	Offset	Holiday Type	Row
				0
				1
				2
				3
				4
				5
				6
				7
				8
				9
				A
				B
				C
				D
				E
				F

Holiday Events <9/1.1+Row>
(Bank 1)

T.O.D. Functions:
0 =
1 = Red Lock
2 = Yellow Lock
3 = Veh Min Recall
4 = Ped Recall
5 =
6 = Rest In Walk
7 = Red Rest
8 = Double Entry
9 = Veh Max Recall
A = Veh Soft Recall
B = Maximum 2
C = Conditional Service
D = Free Lag Phases
E = Bit 1 - Local Override
Bit 4 - Disable Detector OFF Monitor
Bit 7 - Detector Count Monitor
Bit 8 - Real Time Split Monitor
F = Output Bits 1 thru 8

Plan Select:
1 thru 9 = Coordination Plan 1 thru 9
14 or E = Free
15 or F = Flash

Row	Time	Plan	Offset	Day of Week
0	14 : 30	5	A	_23456_
1	18 : 00	E	A	1234567
2				
3				
4				
5				
6				
7				
8				
9				
A				
B				
C				
D				
E				
F				

TOD Coordination <9/0.2+Row>
(Bank 2)

Time	Funct.	Holiday Type

Holiday TOD Function <7/0.2+Row>

Row	Column 4 Phases/Bits
0	
1	
2	
3	
4	
5	
6	
7	
8	
9	
A	
B	
C	
D	
E	
F	

<E/28+Row>

Row	Day	Year	Month	Holiday Type
0				
1				
2				
3				
4				
5				
6				
7				
8				
9				
A				
B				
C				
D				
E				
F				

Holiday Dates <8/1.2+Row>
(Bank 2)

Time	Plan	Offset	Holiday Type	Row
				0
				1
				2
				3
				4
				5
				6
				7
				8
				9
				A
				B
				C
				D
				E
				F

Holiday Events <9/1.2+Row>
(Bank 2)

Month Select:
1 = January
2 = February
3 = March
4 = April
5 = May
6 = June
7 = July
8 = August
9 = September
A = October
B = November
C = December

Cycle Timer:
Master: C/0 + A + 0
Ring A: C/0 + B + 0
Ring B: C/0 + D + 0

Interval Timer:
Ring A: F/0 + A + Interval Row
Ring B: F/0 + B + Interval Row

Master Plan: C/0 + A + 2
Current Plan: C/0 + A + 3
TOD Plan: C/0 + A + 5

INTERSECTION: Linda Vista Rd & Marian Wy/Pacific Ridge Dwy

233 Program

Row	Plan Name --->	Plan 1	Plan 2	Plan 3	Plan 4	Plan 5	Plan 6	Plan 7	Plan 8	Plan 9
					AM	PM				
0	Cycle Length				110	110				
1	Phase 1 - ForceOff				15	~~15~~ 65				
2	Phase 2 - ForceOff				0	0				
3	Phase 3 - ForceOff									
4	Phase 4 - ForceOff									
5	Phase 5 - ForceOff				80	~~80~~ 65				
6	Phase 6 - ForceOff				0	0				
7	Phase 7 - ForceOff				25	~~25~~ 32				
8	Phase 8 - ForceOff				43	~~43~~ 50				
9	Ring Offset									
A	Offset 1				53	18				
B	Offset 2									
C	Offset 3									
D	Perm 1 - End				11	11				
E	Hold Release				255	255				
F	Zone Offset				0	0				

Coordination - Timing Plans <C/1+Plan+Row>

Coord Extra
1 = Programmed WALK Time for Sync Phases
2 = Always Terminate Sync Phase Peds

Row		E
0		
1	Plan 1 - Sync	
2	Plan 2 - Sync	
3	Plan 3 - Sync	
4	Plan 4 - Sync	_2___6__
5	Plan 5 - Sync	_2___6__
6	Plan 6 - Sync	
7	Plan 7 - Sync	
8	Plan 8 - Sync	
9	Plan 9 - Sync	
A	NEMA Sync	
B	NEMA Hold	
C		
D		
E	Coord Extra	
F		

Sync Phases <C/1+E+Row>

Row		Plan 1	Plan 2	Plan 3	Plan 4	Plan 5	Plan 6	Plan 7	Plan 8	Plan 9
0	Ped Adjustment									
1	Perm 2 - Start									
2	Perm 2 - End									
3	Perm 3 - Start									
4	Perm 3 - End									
5	Reservice Time									
6	Reservice Phases									
7										
8	Pretimed Phases									
9	Max Recall									
A	Perm 1 Veh Phase									
B	Perm 1 Ped Phase									
C	Perm 2 Veh Phase									
D	Perm 2 Ped Phase									
E	Perm 3 Veh Phase									
F	Perm 3 Ped Phase									

Coordination - Parameters <C/2+Plan+Row>

Row		F
0	Free Lag	
1	Plan 1 - Lag	
2	Plan 2 - Lag	
3	Plan 3 - Lag	
4	Plan 4 - Lag	_2___6_8
5	Plan 5 - Lag	_2___6_8
6	Plan 6 - Lag	
7	Plan 7 - Lag	
8	Plan 8 - Lag	
9	Plan 9 - Lag	
A	External Lag	
B		
C		
D		
E		
F		

Lag Phases <C/1+F+Row>

Coordination Timing By:

Row	Column 9		Column A		Column B		Column C		Column D		Column E		Column F		Row
0	Spec. Funct. 1		NOT-3		Max 2		Pretimed		Set Monday		Dial 2 (7-Wire)		Sim Term		0
1	Spec. Funct. 2		NOT-4		System Det 1		Plan 1		Ext. Perm 1		Dial 3 (7-Wire)		EV-A		1
2	Spec. Funct. 3		OR-4 (a)		System Det 2		Plan 2		Ext. Perm 2		Offset 1 (7-Wire)		EV-B		2
3	Spec. Funct. 4		OR-4 (b)		System Det 3		Plan 3		Dimming		Offset 2 (7-Wire)		EV-C		3
4	NAND-3 (a)		OR-5 (a)		System Det 4		Plan 4		Set Clock		Offset 3 (7-Wire)		EV-D		4
5	NAND-3 (b)		OR-5 (b)		System Det 5		Plan 5		Stop Time		Free (7-Wire)		RR-1		5
6	NAND-4 (a)		OR-6 (a)		System Det 6		Plan 6		Flash Sense	81	Flash (7-Wire)		RR-2		6
7	NAND-4 (b)		OR-6 (b)		System Det 7		Plan 7		Manual Enable		Excl. Ped Omit		Spec. Event 1		7
8	OR-7 (a)		Fig 3 Diamond		System Det 8		Plan 8		Man. Advance		NOT-1		Spec. Event 2		8
9	OR-7 (b)		Fig 4 Diamond		Max Inhibit (nema)		Plan 9		External Alarm		NOT-2		External Lag		9
A	OR-7 (c)		AND-4 (a)		Force A (nema)		DELAY-A		Phase Bank 2		OR-1 (a)		AND-1 (a)		A
B	OR-7 (d)		AND-4 (b)		Force B (nema)		DELAY-B		Phase Bank 3		OR-1 (b)		AND-1 (b)		B
C	OR-8 (a)		NAND-1 (a)		C.N.A. (nema)		DELAY-C		Overlap Set 2		OR-2 (a)		AND-2 (a)		C
D	OR-8 (b)		NAND-1 (b)		Hold (nema)		DELAY-D		Overlap Set 3		OR-2 (b)		AND-2 (b)		D
E	OR-8 (c)		NAND-2 (a)		Max Recall		DELAY-E		Detector Set 2		OR-3 (a)		AND-3 (a)		E
F	OR-8 (d)		NAND-2 (b)		Min Recall		DELAY-F		Detector Set 3		OR-3 (b)		AND-3 (b)		F

Assignable Inputs <E/126+Column+Row>

Row	Column 9		Column A		Column B		Column C		Column D		Column E		Column F		Row
0	Phase ON - 1		Preempt Fail		Flasher 0		Free		NOT-1		TOD Out 1		Dial 2 (7-Wire)		0
1	Phase ON - 2		Sp Evnt Out 1		Flasher 1		Plan 1		OR-1		TOD Out 2		Dial 3 (7-Wire)		1
2	Phase ON - 3		Sp Evnt Out 2		Fast Flasher		Plan 2		OR-2		TOD Out 3		Offset 1 (7-Wire)		2
3	Phase ON - 4		Sp Evnt Out 3		Fig 3 Diamond		Plan 3		OR-3		TOD Out 4		Offset 2 (7-Wire)		3
4	Phase ON - 5		Sp Evnt Out 4		Fig 4 Diamond		Plan 4		AND-1		TOD Out 5		Offset 3 (7-Wire)		4
5	Phase ON - 6		Sp Evnt Out 5				Plan 5		AND-2		TOD Out 6		Free (7-Wire)		5
6	Phase ON - 7		Sp Evnt Out 6				Plan 6		AND-3		TOD Out 7		Flash (7-Wire)		6
7	Phase ON - 8		Sp Evnt Out 7				Plan 7		NOT-2		TOD Out 8		Preempt		7
8	Ph. Check - 1		Sp Evnt Out 8		NOT-3		Plan 8		EV-A		Adv. Warn - 1		Low Priority A		8
9	Ph. Check - 2				NOT-4		Plan 9		EV-B		Adv. Warn - 2		Low Priority B		9
A	Ph. Check - 3		Detector Fail		OR-4		Spec. Funct. 3		EV-C		DELAY-A		Low Priority C		A
B	Ph. Check - 4		Spec. Funct. 1		OR-5		Spec. Funct. 4		EV-D		DELAY-B		Low Priority D		B
C	Ph. Check - 5		Spec. Funct. 2		OR-6		NAND-3		RR-1		DELAY-C				C
D	Ph. Check - 6		Central Control		AND-4		NAND-4		RR-2		DELAY-D				D
E	Ph. Check - 7		Excl. Ped DW		NAND-1		OR-7		Spec. Event 1		DELAY-E				E
F	Ph. Check - 8		Excl. Ped WK		NAND-2		OR-8		Spec. Event 2		DELAY-F				F

Assignable Outputs <E/127+Column+Row>

INTERSECTION: LINDA VISTA RD @ NAPA ST

223 [illegible]gram

(2)

Group Assignment: NONE
Field Master Assignment: NONE

N/S Street Name: NAPA ST
E/W Street Name: LINDA VISTA RD

Last Database Change:
System Ref. Number: 795

N

Row	Column # --->	1	2	3	4	5	6	7	8
		Linda Vista Rd		Napa St	Napa St		Linda Vista Rd		
	Phase # --->	1	2	3	4	5	6	7	8
0	Ped Walk		5	5	5		5		
1	Ped FDW		22	17	16		11		
2	Min Green	4	7	7	10	4	7		
3	Type 3 Limit								
4	Add/Veh								
5	Veh Extn	2.0	4.3	3.0	2.0	2.0	3.4		
6	Max Gap	2.0	4.3	3.0	2.0	2.0	3.4		
7	Min Gap	2.0	0.2	3.0	2.0	2.0	0.2		
8	Max Limit	30	50	40	40	30	50		
9	Max Limit 2								
A	Bus Adv								
B	Call to Phs								
C	Reduce By		0.1				0.1		
D	Every		0.7				0.9		
E	Yellow	3.4	3.9	3.9	3.9	3.4	4.4		
F	Red Clear	1.0	1.0	1.0	1.0	1.0	1.0		
	Grade								

Phase Timing - Bank 1
F + Phase + Row

<F Page>

	E
RR-1 Delay	
RR-1 Clear	
EV-A Delay	0
EV-A Clear	0
EV-B Delay	0
EV-B Clear	0
EV-C Delay	0
EV-C Clear	0
EV-D Delay	0
EV-D Clear	0
RR-2 Delay	
RR-2 Clear	
View EV Delay	---
View EV Clear	---
View RR Delay	---
View RR Clear	---

Preempt Timing
F + E + Row

	F	Row
Permit	123456__	0
Red Lock		1
Yellow Lock		2
Min Recall		3
Ped Recall		4
Peds (View)	_234_6__	5
Rest in Walk		6
Red Rest		7
Dbl Entry		8
Max Recall		9
Soft Recall	_2___6__	A
Max 2		B
Cond Serv		C
Ped Lock	12345678	D
Yellow Start	_2___6__	E
1st Phases	___4____	F

Phase Functions <F Page>
F + F + Row

Max Initial	0	F + 0 + E
Red Revert	5.0	F + 0 + F
All Red Start	0.0	F + C + O

Start / Revert Times

Drop Number	2	C + 0 + 0
Zone Number	2	C + 0 + 1
Area Number	5	C + 0 + 2
Area Address	79	C + 0 + 3
QuicNet Channel	COM51:	(QuicNet)

Communication Addresses

C + F + O	F	Row
Free Lag	_23__6__	0

Lag Phases <C Page>

Overlap Timing

	Row	9 Green Clear	C Yellow Change	D Red Clear	0 Load-Switch #
Overlap A	A				
Overlap B	B				
Overlap C	C				
Overlap D	D				

<F Page> F + COLOR +

<D Page> D + 0 + OVERLAP

Manual Plan	0	C + A + 1
Manual Offset	0	C + B + 1

Manual Selection

Manual Plan
0 = Automatic
1-9 = Plan 1-9
14 = Free
15 = Flash

Manual Offset
0 = Automatic
1 = Offset A
2 = Offset B
3 = Offset C

Downtime Flash	255	(minutes)

Downtime Before Auto Manual Flash
F + 0 +8

Disable Ports	_234____

Disable Communication Ports
D + D + 9

Timing Sheet By: JS2
Approved By: FLG
Drawing Number: 27197-1-D
Timing Implemented On: 6/1/10

INTERSECTION: LINDA VISTA RD @ NAPA ST

Row	Time	Function	Day of Week	Column F Phases/Bits
0	00 : 01	E	1234567	1_____
1	:			
2	:			
3	:			
4	:			
5	:			
6	:			
7	:			
8	:			
9	:			
A	:			
B	:			
C	:			
D	:			
E	:			
F	:			

TOD Function

7 + ROW

<D Page>

D + F + ROW

T.O.D. Functions
0 = Permitted Phases
1 = Red Lock
2 = Yellow Lock
3 = Veh Min Recall
4 = Ped Recall
5 =
6 = Rest In Walk
7 = Red Rest
8 = Double Entry
9 = Veh Max Recall
A = Veh Soft Recall
B = Maximum 2
C = Conditional Service
D = Free Lag Phases
E = Bit 1 - Local Override
Bit 2 - Phase Bank 2
Bit 3 - Phase Bank 3
Bit 4 - Disable Detector OFF Monitor
Bit 7 - Detector Count Monitor
Bit 8 - Real Time Split Monitor
F = Output Bits 1 thru 4

Row		F
0		
1	RR Overlap A - Phases	
2	RR Overlap B - Phases	
3	RR Overlap C - Phases	
4	RR Overlap D - Phases	
5	Ped 2P	_2_____
6	Ped 6P	_____6__
7	Ped 4P	___4____
8	Ped 8P	__3_____
9	Yellow Flash Phases	
A	Overlap A - Phases	
B	Overlap B - Phases	
C	Overlap C - Phases	
D	Overlap D - Phases	
E	Restricted Phases	
F	Assign 5 Outputs	

Configuration

<E Page>

E + F + ROW

Day of Week

1 = Sunday
2 = Monday
3 = Tuesday
4 = Wednesday
5 = Thursday
6 = Friday
7 = Saturday

Row		E
0	Exclusive Phases	
1	RR-1 Clear Phases	
2	RR-2 Clear Phases	
3	RR-2 Limited Service	
4	Prot / Perm Phases	
5	Overlap A - Green Omit	
6	Overlap B - Green Omit	
7	Overlap C - Green Omit	
8	Overlap D - Green Omit	
9	Overlap Yellow Flash	
A	EV-A Phases	_2__5___
B	EV-B Phases	___4____
C	EV-C Phases	1____6__
D	EV-D Phases	__3_____
E	Extra 1 Config. Bits	1_345___
F	IC Select (Interconnect)	_2_____

Configuration

For access, set F + 9 + E = 1

E + E + ROW

Extra 1 Flags
1 = TBC Type 1
2 = NEMA Ext. Coord
3 = Auto Daylight Savings
4 = EV Advance
5 = Remote Download
6 = Special Event
7 = Pretimed Operation
8 = Split Ring Operation

IC Select Flags
1 =
2 = Modem
3 = 7-Wire Slave
4 = Flash / Free
5 =
6 = Simplex Master
7 = 7-Wire Master
8 = Offset Interrupter

Assign 5 Outputs
1 = Right Turn Overlap
2 = TOD Outputs
3 = EV Beacon - Steady
4 = EV Beacon - Flashing
5 = Special Event Outputs
6 = Phase 3 & 7 Ped
7 = Advanced Warning Sign
8 =

Time and Date

8-0 Hour, Minute, Day-of-Week
8-1 Day-of-Month, Year, Month
8-F Seconds

Disable Parity	0	D+B+0

Dial-Up Telephone Communications

(If set to a non-zero value, parity will be disabled)

Program Information

C + C + 0 = program
C + C + F = version

Remote Download

C + 0 + 4 = 1 -255
w/ E + E + E bit 5 on

Row	1 Delay	3 Carry-over
0	2.0	
1		1.8
2		
3		
4		
5		
6		
7		
8		
9		
A		
B		
C		
D		
E	---	---
F	---	---

Detector Name	332 Input File	Detector Number
	1I1	14
	2I2U	1
	2I2L	5
	2I3U	21
	2I3L	25
	2I4	9
	3I5	16
	4I6U	3
	4I6L	7
	4I7U	23
	4I7L	27
	4I8	11
	1I9U	18
	3I9L	20
---	---	---
---	---	---

Row	2 Delay	4 Carry-over
0		
1		1.8
2		1.8
3		
4		
5		
6		
7		
8		
9		
A		
B		
C		
D		
E	---	---
F	---	---

Detector Name	332 Input File	Detector Number
	5J1	13
	6J2U	2
	6J2L	6
	6J3U	22
	6J3L	26
	6J4	10
	7J5	15
	8J6U	4
	8J6L	8
	8J7U	24
	8J7L	28
	8J8	12
	5J9U	17
	7J9L	19
---	---	---
---	---	---

Detector Delay & Carryover <D Page>

D + X (across) + ROW

Row	Detector Numbers	E
A	1 2 3 4 5 6 7 8	12345678
B	9 10 11 12 -- -- -- --	1234____
C	13 14 15 16 17 18 19 20	12345678
D	-- -- -- -- 21 22 23 24	____5678
E	-- -- -- -- -- -- -- --	1234____
F	-- 25 26 27 28 -- -- --	_2345___

Active Detectors <D Page>

Row		0 Detector #
0		
1	System Det. # 1	
2	System Det. # 2	
3	System Det. # 3	
4	System Det. # 4	
5	System Det. # 5	
6	System Det. # 6	
7	System Det. # 7	
8	System Det. # 8	

System Detectors <D Page>

Max ON (min)	5	D+A+E
Max OFF (min)	60	D+A+F

Detector Failure Monitor

Phase Number		F+C+1
Time Before Yellow		F+C+3

Advance Warning Beacon - Sign 1

Phase Number		F+D+1
Time Before Yellow		F+D+3

Advance Warning Beacon - Sign 2

Long Failure	0.5	F+0+6
Short Failure	0.5	F+0+7

Power Cycle Correction (Default = 0.5)

INTERSECTION: LINDA VISTA RD @ NAPA ST

223 Program

Coordination Timing By: KH&A
Implemented On: 2/3/2010

Row	Column # --->	Plan 1	2	3	4	5	6	7	8	9
	Plan Name --->		MD/WE			AM	PM			
0	Cycle Length		96			110	136			
1	Phase 1 - ForceOff		68			79	98			
2	Phase 2 - ForceOff		0			0	0			
3	Phase 3 - ForceOff		49			66	29			
4	Phase 4 - ForceOff		29			38	70			
5	Phase 5 - ForceOff		63			79	82			
6	Phase 6 - ForceOff		0			0	0			
7	Phase 7 - ForceOff									
8	Phase 8 - ForceOff									
9	Ring Offset									
A	Offset A		3			37	47			
B	Offset B									
C	Offset C									
D	Permissive		10			11	14			
E	Hold Release		255			255	255			
F	Ped Shift		0			0	0			

Coordination <C Page>

C + Plan + ROW

FOR OBSERVATION ONLY

Master Plan	C + A + 2
Current Plan	C + A + 3
Next Plan	C + A + 4
T.O.D. Plan	C + A + 5
Master Cycle	C + A + 0
Ring A Cycle	C + B + 0
Ring B Cycle	C + D + 0
Min Cycle	C + A + E
Max Cycle	C + B + E

Row	Time	Plan	Offset	Day of Week
0	06 : 30	5	A	_23456_
1	09 : 00	2	A	1____7
2	10 : 30	2	A	_23456_
3	13 : 30	6	A	_23456_
4	18 : 00	2	A	_23456_
5	19 : 00	E	A	1____7
6	20 : 00	E	A	1234567
7	:			
8	:			
9	:			
A	:			
B	:			
C	:			
D	:			
E	:			
F	:			

TOD Coordination

<9 Key with C+0+9=1>

	E
Plan 1	
Plan 2	_2__6__
Plan 3	
Plan 4	
Plan 5	_2__6__
Plan 6	_2__6__
Plan 7	
Plan 8	
Plan 9	
Coord Ped*	
NEMA Hold	

Sync Phases

C + E + FUNCTION #

Row		F
0	Free Lag	_23__6__
1	Plan 1 - Lag	
2	Plan 2 - Lag	_23__6__
3	Plan 3 - Lag	
4	Plan 4 - Lag	
5	Plan 5 - Lag	_23__6__
6	Plan 6 - Lag	_2_4_6__
7	Plan 7 - Lag	
8	Plan 8 - Lag	
9	Plan 9 - Lag	
A	Coord Max *	___4____
B	Coord Lag *	
C		
D		
E		
F		

Lag Phases <C Page>

C + F + FUNCTION #

Transition Type	0

TBC Transition
C + D + D

Transition Type
0 = Shortway
Non-zero = Lengthen

Plan Select
1 thru 9 = Coordination
Plan 1 thru 9
14 or E = Free
15 or F = Flash

INTERSECTION: LINDA VISTA @ VIA LAS CUMBRES

223 Program

Group Assignment: NONE
Field Master Assignment: NONE

N/S Street Name: VIA LAS CUMBRES
E/W Street Name: LINDA VISTA

Last Database Change:
System Ref. Number: 885

N

Row	Column # --->	1	2	3	4	5	6	7	8
		Linda Vista Rd			Via Las Cumbres		Linda Vista Rd		Via Las Cumbres
	Phase # --->	1	2	3	4	5	6	7	8
0	Ped Walk		7		7		7		7
1	Ped FDW		26		19		20		25
2	Min Green	4	10	4	7	4	10	4	7
3	Type 3 Limit								
4	Add/Veh								
5	Veh Extn	2.0	2.1	2.0	2.0	2.0	2.1	2.0	2.0
6	Max Gap	2.0	2.1	2.0	2.0	2.0	2.1	2.0	2.0
7	Min Gap	2.0	0.2	2.0	2.0	2.0	0.2	2.0	2.0
8	Max Limit	30	50	30	40	30	50	30	40
9	Max Limit 2								
A	Bus Adv								
B	Call to Phs								
C	Reduce By		0.1				0.1		
D	Every		1.6				1.6		
E	Yellow	3.4	4.4	3.4	3.9	3.4	4.7	3.4	4.2
F	Red Clear	1.0	2.0	1.0	1.0	1.0	2.0	1.0	1.0
	Grade								

Phase Timing - Bank 1
F + Phase + Row

<F Page>

	E
RR-1 Delay	
RR-1 Clear	
EV-A Delay	0
EV-A Clear	0
EV-B Delay	0
EV-B Clear	0
EV-C Delay	0
EV-C Clear	0
EV-D Delay	0
EV-D Clear	0
RR-2 Delay	
RR-2 Clear	
View EV Delay	---
View EV Clear	---
View RR Delay	---
View RR Clear	---

Preempt Timing
F + E + Row

Row		F
0	Permit	12345678
1	Red Lock	
2	Yellow Lock	
3	Min Recall	
4	Ped Recall	
5	Peds (View)	_2_4_6_8
6	Rest In Walk	
7	Red Rest	
8	Dbl Entry	
9	Max Recall	
A	Soft Recall	_2___6__
B	Max 2	
C	Cond Serv	
D	Ped Lock	12345678
E	Yellow Start	_2___6__
F	1st Phases	__3___7_

Phase Functions <F Page>
F + F + Row

Max Initial	0	F + 0 + E
Red Revert	5.0	F + 0 + F
All Red Start	0.0	F + C + O

Start / Revert Times

Drop Number	10	C + 0 + 0
Zone Number	10	C + 0 + 1
Area Number	5	C + 0 + 2
Area Address	107	C + 0 + 3
QuicNet Channel	COM51:	(QuicNet)

Communication Addresses

C + F + O	F	Row
Free Lag	_2_4_6_8	0

Lag Phases <C Page>

Overlap Timing

	Row	9 Green Clear	C Yellow Change	D Red Clear	0 Load-Switch #
Overlap A	A				
Overlap B	B				
Overlap C	C				
Overlap D	D				

<F Page> <D Page>
F + COLOR + D + 0 + OVERLAP

Manual Plan	0	C + A + 1
Manual Offset	0	C + B + 1

Manual Selection

Manual Plan
0 = Automatic
1-9 = Plan 1-9
14 = Free
15 = Flash

Manual Offset
0 = Automatic
1 = Offset A
2 = Offset B
3 = Offset C

Downtime Flash	255	(minutes)

Downtime Before Auto Manual Flash
F + 0 +8

Disable Ports	_234____

Disable Communication Ports
D + D + 9

Timing Sheet By: KT
Approved By: FLG
Drawing Number: 20786-8-D
Timing Implemented On:

Turn on Date 7/28/2012 NB-overlap

INTERSECTION: LINDA VISTA @ VIA LAS CUMBRES

223 Program

Row	Time	Function	Day of Week	Column F Phases/Bits
0	:			
1	:			
2	:			
3	:			
4	:			
5	:			
6	:			
7	:			
8	:			
9	:			
A	:			
B	:			
C	:			
D	:			
E	:			
F	:			

TOD Function

7 + ROW

<D Page>

D + F + ROW

T.O.D. Functions
0 = Permitted Phases
1 = Red Lock
2 = Yellow Lock
3 = Veh Min Recall
4 = Ped Recall
5 =
6 = Rest In Walk
7 = Red Rest
8 = Double Entry
9 = Veh Max Recall
A = Veh Soft Recall
B = Maximum 2
C = Conditional Service
D = Free Lag Phases
E = Bit 1 - Local Override
Bit 2 - Phase Bank 2
Bit 3 - Phase Bank 3
Bit 4 - Disable Detector OFF Monitor
Bit 7 - Detector Count Monitor
Bit 8 - Real Time Split Monitor
F = Output Bits 1 thru 4

Row		F
0		
1	RR Overlap A - Phases	
2	RR Overlap B - Phases	
3	RR Overlap C - Phases	
4	RR Overlap D - Phases	
5	Ped 2P	2
6	Ped 6P	6
7	Ped 4P	4
8	Ped 8P	8
9	Yellow Flash Phases	
A	Overlap A - Phases	1 8
B	Overlap B - Phases	
C	Overlap C - Phases	
D	Overlap D - Phases	
E	Restricted Phases	
F	Assign 5 Outputs	1

Configuration

<E Page>

E + F + ROW

Day of Week

1 = Sunday
2 = Monday
3 = Tuesday
4 = Wednesday
5 = Thursday
6 = Friday
7 = Saturday

Assign 5 Outputs
1 = Right Turn Overlap
2 = TOD Outputs
3 = EV Beacon - Steady
4 = EV Beacon - Flashing
5 = Special Event Outputs
6 = Phase 3 & 7 Ped
7 = Advanced Warning Sign
8 =

Row		E
0	Exclusive Phases	
1	RR-1 Clear Phases	
2	RR-2 Clear Phases	
3	RR-2 Limited Service	
4	Prot / Perm Phases	
5	Overlap A - Green Omit	8
6	Overlap B - Green Omit	
7	Overlap C - Green Omit	
8	Overlap D - Green Omit	
9	Overlap Yellow Flash	
A	EV-A Phases	2 5
B	EV-B Phases	4 7
C	EV-C Phases	1 6
D	EV-D Phases	3 8
E	Extra 1 Config. Bits	1 345
F	IC Select (Interconnect)	2

Extra 1 Flags
1 = TBC Type 1
2 = NEMA Ext. Coord
3 = Auto Daylight Savings
4 = EV Advance
5 = Remote Download
6 = Special Event
7 = Pretimed Operation
8 = Split Ring Operation

IC Select Flags
1 =
2 = Modem
3 = 7-Wire Slave
4 = Flash / Free
5 =
6 = Simplex Master
7 = 7-Wire Master
8 = Offset Interrupter

For access, set F + 9 + E = 1

Configuration

E + E + ROW

Time and Date

8-0 Hour, Minute, Day-of-Week
8-1 Day-of-Month, Year, Month
8-F Seconds

Disable Parity	0	D+B+0

Dial-Up Telephone Communications

(If set to a non-zero value, parity will be disabled)

Program Information

C + C + 0 = program
C + C + F = version

Remote Download

C + 0 + 4 = 1 -255
w/ E + E + E bit 5 on

Row	1 Delay	3 Carry-over	Detector Name	332 Input File	Detector Number
0				1I1	14
1		1.8		2I2U	1
2				2I2L	5
3		2.0	Bike Lane	2I3U	21
4				2I3L	25
5				2I4	9
6				3I5	16
7				4I6U	3
8				4I6L	7
9				4I7U	23
A				4I7L	27
B				4I8	11
C				1I9U	18
D				3I9L	20
E	---	---	---	---	---
F	---	---	---	---	---

Row	2 Delay	4 Carry-over	Detector Name	332 Input File	Detector Number
0				5J1	13
1		1.8		6J2U	2
2				6J2L	6
3		2.0	Bike Lane	6J3U	22
4				6J3L	26
5				6J4	10
6				7J5	15
7				8J6U	4
8				8J6L	8
9				8J7U	24
A				8J7L	28
B				8J8	12
C				5J9U	17
D				7J9L	19
E	---	---	---	---	---
F	---	---	---	---	---

Detector Delay & Carryover <D Page>

D + X (across) + ROW

Row	Detector Numbers	E
4	1 2 3 4 5 6 7 8	12345678
5	9 10 11 12 -- -- -- --	1234____
6	13 14 15 16 17 18 19 20	12345678
7	-- -- -- -- 21 22 23 24	____5678
8	-- -- -- -- -- -- -- --	1234____
9	-- 25 26 27 28 -- -- --	_2345___

Active Detectors <D Page>

Row		0 Detector #
0		
1	System Det. # 1	
2	System Det. # 2	
3	System Det. # 3	
4	System Det. # 4	
5	System Det. # 5	
6	System Det. # 6	
7	System Det. # 7	
8	System Det. # 8	

System Detectors <D Page>

Max ON (min)	5	D+A+E
Max OFF (min)	60	D+A+F

Detector Failure Monitor

Phase Number		F+C+1
Time Before Yellow		F+C+3

Advance Warning Beacon - Sign 1

Phase Number		F+D+1
Time Before Yellow		F+D+3

Advance Warning Beacon - Sign 2

Long Failure	0.5	F+0+6
Short Failure	0.5	F+0+7

Power Cycle Correction (Default = 0.5)

INTERSECTION: LINDA VISTA @ VIA LAS CUMBR

223 Progr

Coordination Timing By: KH&A
Implemented On: 2/3/2010

Row	Column # --->	Plan 1	2	3	4	5	6	7	8	9
	Plan Name --->				AM		PM			
0	Cycle Length				110		110			
1	Phase 1 - ForceOff				75		72			
2	Phase 2 - ForceOff				0		0			
3	Phase 3 - ForceOff				29		22			
4	Phase 4 - ForceOff				60		53			
5	Phase 5 - ForceOff				73		68			
6	Phase 6 - ForceOff				0		0			
7	Phase 7 - ForceOff				15		15			
8	Phase 8 - ForceOff				60		53			
9	Ring Offset									
A	Offset A				44		105			
B	Offset B									
C	Offset C									
D	Permissive				11		11			
E	Hold Release				255		255			
F	Ped Shift				0		0			

Coordination <C Page>

C + Plan + ROW

FOR OBSERVATION ONLY

Master Plan	C + A + 2
Current Plan	C + A + 3
Next Plan	C + A + 4
T.O.D. Plan	C + A + 5
Master Cycle	C + A + 0
Ring A Cycle	C + B + 0
Ring B Cycle	C + D + 0
Min Cycle	C + A + E
Max Cycle	C + B + E

Row	Time	Plan	Offset	Day of Week
0	07 : 00	4	A	23456
1	09 : 00	E	A	23456
2	14 : 30	6	A	23456
3	18 : 00	E	A	1234567
4	:			
5	:			
6	:			
7	:			
8	:			
9	:			
A	:			
B	:			
C	:			
D	:			
E	:			
F	:			

TOD Coordination

<9 Key with C+0+9=1>

	E
Plan 1	
Plan 2	
Plan 3	
Plan 4	2 6
Plan 5	
Plan 6	2 6
Plan 7	
Plan 8	
Plan 9	
Coord Ped*	
NEMA Hold	

Sync Phases

C + E + FUNCTION #

Row		F
0	Free Lag	2 4 6 8
1	Plan 1 - Lag	
2	Plan 2 - Lag	
3	Plan 3 - Lag	
4	Plan 4 - Lag	2 4 6 8
5	Plan 5 - Lag	
6	Plan 6 - Lag	2 4 6 8
7	Plan 7 - Lag	
8	Plan 8 - Lag	
9	Plan 9 - Lag	
A	Coord Max *	
B	Coord Lag *	
C		
D		
E		
F		

Lag Phases <C Page>

C + F + FUNCTION #

Transition Type	0

TBC Transition
C + D + D

Plan Select
1 thru 9 = Coordination Plan 1 thru 9
14 or E = Free
15 or F = Flash

Transition Type
0 = Shortway
Non-zero = Lengthen

INTERSECTION: LINDA VISTA @ VIA LAS CUMBRES

223 Program

Group Assignment: NONE
Field Master Assignment: NONE

N/S Street Name: VIA LAS CUMBRES
E/W Street Name: LINDA VISTA

Last Database Change:
System Ref. Number: 865

N

Row	Column # --->	1	2	3	4	5	6	7	8
		Linda Vista Rd		Via Las Cumbres		Linda Vista Rd		Via Las Cumbres	
	Phase # --->	1	2	3	4	5	6	7	8
0	Ped Walk		7		7		7		7
1	Ped FDW		26		19		20		21
2	Min Green	4	10	4	7	4	10	4	7
3	Type 3 Limit								
4	Add/Veh								
5	Veh Extn	2.0	2.1	2.0	2.0	2.0	2.1	2.0	2.0
6	Max Gap	2.0	2.1	2.0	2.0	2.0	2.1	2.0	2.0
7	Min Gap	2.0	0.2	2.0	2.0	2.0	0.2	2.0	2.0
8	Max Limit	30	50	30	40	30	50	30	40
9	Max Limit 2								
A	Bus Adv								
B	Call to Phs								
C	Reduce By		0.1				0.1		
D	Every		1.6				1.6		
E	Yellow	3.4	4.4	3.4	3.9	3.4	4.7	3.4	4.2
F	Red Clear	1.0	1.0	1.0	1.0	1.0	1.0	1.0	1.0
	Grade								

Phase Timing - Bank 1
F + Phase + Row

	E
RR-1 Delay	
RR-1 Clear	
EV-A Delay	0
EV-A Clear	0
EV-B Delay	0
EV-B Clear	0
EV-C Delay	0
EV-C Clear	0
EV-D Delay	0
EV-D Clear	0
RR-2 Delay	
RR-2 Clear	
View EV Delay	---
View EV Clear	---
View RR Delay	---
View RR Clear	---

Preempt Timing
F + E + Row

Row		F
0	Permit	12345678
1	Red Lock	
2	Yellow Lock	
3	Min Recall	
4	Ped Recall	
5	Peds (View)	_2_4_6_8
6	Rest In Walk	
7	Red Rest	
8	Dbl Entry	
9	Max Recall	
A	Soft Recall	_2___6__
B	Max 2	
C	Cond Serv	
D	Ped Lock	12345678
E	Yellow Start	_2___6__
F	1st Phases	__3___7_

Phase Functions <F Page>
F + F + Row

Max Initial	0	F + 0 + E
Red Revert	5.0	F + 0 + F
All Red Start	0.0	F + C + O

Start / Revert Times

Drop Number	10	C + 0 + 0
Zone Number	10	C + 0 + 1
Area Number	5	C + 0 + 2
Area Address	107	C + 0 + 3
QuicNet Channel	COM51:	(QuicNet)

Communication Addresses

C + F + O	F	Row
Free Lag	_2_4_6_8	0

Lag Phases <C Page>

Overlap Timing

	Row	9 Green Clear	C Yellow Change	D Red Clear	0 Load-Switch #
Overlap A	A				
Overlap B	B				
Overlap C	C				
Overlap D	D				

<F Page>
F + COLOR +

<D Page>
D + 0 + OVERLAP

Manual Plan	0	C + A + 1
Manual Offset	0	C + B + 1

Manual Selection

Manual Plan
0 = Automatic
1-9 = Plan 1-9
14 = Free
15 = Flash

Manual Offset
0 = Automatic
1 = Offset A
2 = Offset B
3 = Offset C

Downtime Flash	255	(minutes)

Downtime Before Auto Manual Flash
F + 0 +8

Disable Ports	_234___

Disable Communication Ports
D + D + 9

Timing Sheet By: JS2
Approved By: FC
Drawing Number: 20786-8-D
Timing Implemented On: 6/1/10

INTERSECTION: LINDA VISTA @ VIA LAS CUMBRES

Row	Time	Function	Day of Week	Column F Phases/Bits
0	:			
1	:			
2	:			
3	:			
4	:			
5	:			
6	:			
7	:			
8	:			
9	:			
A	:			
B	:			
C	:			
D	:			
E	:			
F	:			

TOD Function

7 + ROW

<D Page>

D + F + ROW

T.O.D. Functions
0 = Permitted Phases
1 = Red Lock
2 = Yellow Lock
3 = Veh Min Recall
4 = Ped Recall
5 =
6 = Rest In Walk
7 = Red Rest
8 = Double Entry
9 = Veh Max Recall
A = Veh Soft Recall
B = Maximum 2
C = Conditional Service
D = Free Lag Phases
E = Bit 1 - Local Override
Bit 2 - Phase Bank 2
Bit 3 - Phase Bank 3
Bit 4 - Disable Detector OFF Monitor
Bit 7 - Detector Count Monitor
Bit 8 - Real Time Split Monitor
F = Output Bits 1 thru 4

Row		F
0		
1	RR Overlap A - Phases	
2	RR Overlap B - Phases	
3	RR Overlap C - Phases	
4	RR Overlap D - Phases	
5	Ped 2P	_2_____
6	Ped 6P	_____6__
7	Ped 4P	___4____
8	Ped 8P	_____8
9	Yellow Flash Phases	
A	Overlap A - Phases	
B	Overlap B - Phases	
C	Overlap C - Phases	
D	Overlap D - Phases	
E	Restricted Phases	
F	Assign 5 Outputs	

Configuration

<E Page>

E + F + ROW

Day of Week

1 = Sunday
2 = Monday
3 = Tuesday
4 = Wednesday
5 = Thursday
6 = Friday
7 = Saturday

Row		E
0	Exclusive Phases	
1	RR-1 Clear Phases	
2	RR-2 Clear Phases	
3	RR-2 Limited Service	
4	Prot / Perm Phases	
5	Overlap A - Green Omit	
6	Overlap B - Green Omit	
7	Overlap C - Green Omit	
8	Overlap D - Green Omit	
9	Overlap Yellow Flash	
A	EV-A Phases	_2__5___
B	EV-B Phases	___4__7_
C	EV-C Phases	1____6__
D	EV-D Phases	__3____8
E	Extra 1 Config. Bits	1_345___
F	IC Select (Interconnect)	_2_____

Configuration

For access, set F + 9 + E = 1

E + E + ROW

Extra 1 Flags
1 = TBC Type 1
2 = NEMA Ext. Coord
3 = Auto Daylight Savings
4 = EV Advance
5 = Remote Download
6 = Special Event
7 = Pretimed Operation
8 = Split Ring Operation

IC Select Flags
1 =
2 = Modem
3 = 7-Wire Slave
4 = Flash / Free
5 =
6 = Simplex Master
7 = 7-Wire Master
8 = Offset Interrupter

Assign 5 Outputs
1 = Right Turn Overlap
2 = TOD Outputs
3 = EV Beacon - Steady
4 = EV Beacon - Flashing
5 = Special Event Outputs
6 = Phase 3 & 7 Ped
7 = Advanced Warning Sign
8 =

Time and Date

8-0 Hour, Minute, Day-of-Week
8-1 Day-of-Month, Year, Month
8-F Seconds

Disable Parity	0	D+B+0

Dial-Up Telephone Communications
(If set to a non-zero value, parity will be disabled)

Program Information

C + C + 0 = program
C + C + F = version

Remote Download

C + 0 + 4 = 1 -255
w/ E + E + E bit 5 on

ERSECTION: LINDA VISTA @ VIA LAS CUMBR

223 Program

Row	1 Delay	3 Carry-over
0		
1		1.8
2		
3		2.0
4		
5		
6		
7		
8		
9		
A		
B		
C		
D		
E	---	---
F	---	---

Detector Name	332 Input File	Detector Number
	1I1	14
	2I2U	1
	2I2L	5
Bike Lane	2I3U	21
	2I3L	25
	2I4	9
	3I5	16
	4I6U	3
	4I6L	7
	4I7U	23
	4I7L	27
	4I8	11
	1I9U	18
	3I9L	20
---	---	---
---	---	---

Row	2 Delay	4 Carry-over
0		
1		1.8
2		
3		2.0
4		
5		
6		
7		
8		
9		
A		
B		
C		
D		
E	---	---
F	---	---

Detector Name	332 Input File	Detector Number
	5J1	13
	6J2U	2
	6J2L	6
Bike Lane	6J3U	22
	6J3L	26
	6J4	10
	7J5	15
	8J6U	4
	8J6L	8
	8J7U	24
	8J7L	28
	8J8	12
	5J9U	17
	7J9L	19
---	---	---
---	---	---

Detector Delay & Carryover <D Page>

D + X (across) + ROW

Row	Detector Numbers	E
A	1 2 3 4 5 6 7 8	12345678
B	9 10 11 12 -- -- -- --	1234____
C	13 14 15 16 17 18 19 20	12345678
D	-- -- -- -- 21 22 23 24	____5678
E	-- -- -- -- -- -- -- --	1234____
F	-- 25 26 27 28 -- -- --	_2345___

Active Detectors <D Page>

Row		0 Detector #
0		
1	System Det. # 1	
2	System Det. # 2	
3	System Det. # 3	
4	System Det. # 4	
5	System Det. # 5	
6	System Det. # 6	
7	System Det. # 7	
8	System Det. # 8	

System Detectors <D Page>

Max ON (min)	5	D+A+E
Max OFF (min)	60	D+A+F

Detector Failure Monitor

Phase Number		F+C+1
Time Before Yellow		F+C+3

Advance Warning Beacon - Sign 1

Phase Number		F+D+1
Time Before Yellow		F+D+3

Advance Warning Beacon - Sign 2

Long Failure	0.5	F+0+6
Short Failure	0.5	F+0+7

Power Cycle Correction (Default = 0.5)

INTERSECTION: LINDA VISTA @ VIA LAS CUMBRES

223 Program

Coordination Timing By: KH&A
Implemented On: 2/3/2010

Row	Column # ---->	Plan 1	Plan 2	Plan 3	Plan 4	Plan 5	Plan 6	Plan 7	Plan 8	Plan 9
	Plan Name ---->				AM		PM			
0	Cycle Length				110		110			
1	Phase 1 - ForceOff				75		72			
2	Phase 2 - ForceOff				0		0			
3	Phase 3 - ForceOff				29		22			
4	Phase 4 - ForceOff				60		53			
5	Phase 5 - ForceOff				73		68			
6	Phase 6 - ForceOff				0		0			
7	Phase 7 - ForceOff				15		15			
8	Phase 8 - ForceOff				60		53			
9	Ring Offset									
A	Offset A				44		105			
B	Offset B									
C	Offset C									
D	Permissive				11		11			
E	Hold Release				255		255			
F	Ped Shift				0		0			

Coordination
C + Plan + ROW

<C Page>

FOR OBSERVATION ONLY

Master Plan	C + A + 2
Current Plan	C + A + 3
Next Plan	C + A + 4
T.O.D. Plan	C + A + 5
Master Cycle	C + A + 0
Ring A Cycle	C + B + 0
Ring B Cycle	C + D + 0
Min Cycle	C + A + E
Max Cycle	C + B + E

Row	Time	Plan	Offset	Day of Week
0	07 : 00	4	A	_23456_
1	09 : 00	E	A	_23456_
2	14 : 30	6	A	_23456_
3	18 : 00	E	A	1234567
4	:			
5	:			
6	:			
7	:			
8	:			
9	:			
A	:			
B	:			
C	:			
D	:			
E	:			
F	:			

TOD Coordination
<9 Key with C+0+9=1>

	E
Plan 1	
Plan 2	
Plan 3	
Plan 4	_2__6__
Plan 5	
Plan 6	_2__6__
Plan 7	
Plan 8	
Plan 9	
Coord Ped*	
NEMA Hold	

Sync Phases
C + E + FUNCTION #

Row		F
0	Free Lag	_2_4_6_8
1	Plan 1 - Lag	
2	Plan 2 - Lag	
3	Plan 3 - Lag	
4	Plan 4 - Lag	_2_4_6_8
5	Plan 5 - Lag	
6	Plan 6 - Lag	_2_4_6_8
7	Plan 7 - Lag	
8	Plan 8 - Lag	
9	Plan 9 - Lag	
A	Coord Max *	
B	Coord Lag *	
C		
D		
E		
F		

Lag Phases <C Page>
C + F + FUNCTION #

Transition Type	0

TBC Transition
C + D + D

Plan Select
1 thru 9 = Coordination Plan 1 thru 9
14 or E = Free
15 or F = Flash

Transition Type
0 = Shortway
Non-zero = Lengthen

NTERSECTION: LINDA VISTA @ ULRIC

223 gram

(5)

Group Assignment: 4056
Field Master Assignment: NONE

N/S Street Name: LINDA VISTA
E/W Street Name: ULRIC

Last Database Change:
System Ref. Number: 458

N

Row	Column # ---> / Phase # --->	1	2	3	4	5	6	7	8
		Linda Vista Rd			Ulric St		Linda Vista Rd		Ulric St
		Phase							
0	Ped Walk		7		7		7		7
1	Ped FDW		17		21		12		20
2	Min Green	4	10		7	4	10		7
3	Type 3 Limit								
4	Add/Veh								
5	Veh Extn	2.0	5.9		2.0	2.0	6.3		2.0
6	Max Gap	2.0	5.9		2.0	2.0	6.3		2.0
7	Min Gap	2.0	0.2		2.0	2.0	0.2		2.0
8	Max Limit	30	60		40	30	60		40
9	Max Limit 2								
A	Bus Adv								
B	Call to Phs								
C	Reduce By		0.1				0.1		
D	Every		0.5				0.5		
E	Yellow	3.4	3.9		3.9	3.4	3.9		3.9
F	Red Clear	1.0	1.0		1.0	1.0	1.0		1.0
	Grade								

Phase Timing - Bank 1
F + Phase + Row

<F Page>

	E
RR-1 Delay	
RR-1 Clear	
EV-A Delay	0
EV-A Clear	0
EV-B Delay	0
EV-B Clear	0
EV-C Delay	0
EV-C Clear	0
EV-D Delay	0
EV-D Clear	0
RR-2 Delay	
RR-2 Clear	
View EV Delay	---
View EV Clear	---
View RR Delay	---
View RR Clear	---

Preempt Timing
F + E + Row

	F	Row
Permit	12_456_8	0
Red Lock		1
Yellow Lock		2
Min Recall	_2___6__	3
Ped Recall		4
Peds (View)	_2_4_6_8	5
Rest In Walk		6
Red Rest		7
Dbl Entry	___4___8	8
Max Recall		9
Soft Recall		A
Max 2		B
Cond Serv		C
Ped Lock	12345678	D
Yellow Start	_2___6__	E
1st Phases	___4___8	F

Phase Functions <F Page>
F + F + Row

Max Initial	0	F + 0 + E
Red Revert	5.0	F + 0 + F
All Red Start	0.0	F + C + O

Start / Revert Times

Drop Number	8	C + 0 + 0
Zone Number	8	C + 0 + 1
Area Number	5	C + 0 + 2
Area Address	50	C + 0 + 3
QuicNet Channel	COM44:	(QuicNet)

Communication Addresses

C + F + O	F	Row
Free Lag	_2_4_6_8	0
	Lag Phases	<C Page>

Overlap Timing

	Row	9 Green Clear	C Yellow Change	D Red Clear	0 Load-Switch #
Overlap A	A				
Overlap B	B				
Overlap C	C				
Overlap D	D				

<F Page> F + COLOR +

<D Page> D + 0 + OVERLAP

Manual Plan	0	C + A + 1
Manual Offset	0	C + B + 1

Manual Selection

Manual Plan
0 = Automatic
1-9 = Plan 1-9
14 = Free
15 = Flash

Manual Offset
0 = Automatic
1 = Offset A
2 = Offset B
3 = Offset C

Downtime Flash	255	(minutes)

Downtime Before Auto Manual Flash
F + 0 +8

Disable Ports	_234___

Disable Communication Ports
D + D + 9

Timing Sheet By: JS2
Approved By: FLG
Drawing Number: 34050-2-D
Timing Implemented On: 6/1/10

INTERSECTION: LINDA VISTA @ ULRIC

Row	Time	Function	Day of Week	Column F Phases/Bits
0	00 : 01	E	1234567	1_____
1	:			
2	:			
3	:			
4	:			
5	:			
6	:			
7	:			
8	:			
9	:			
A	:			
B	:			
C	:			
D	:			
E	:			
F	:			

TOD Function <D Page>

7 + ROW D + F + ROW

T.O.D. Functions
0 = Permitted Phases
1 = Red Lock
2 = Yellow Lock
3 = Veh Min Recall
4 = Ped Recall
5 =
6 = Rest In Walk
7 = Red Rest
8 = Double Entry
9 = Veh Max Recall
A = Veh Soft Recall
B = Maximum 2
C = Conditional Service
D = Free Lag Phases
E = Bit 1 - Local Override
Bit 2 - Phase Bank 2
Bit 3 - Phase Bank 3
Bit 4 - Disable Detector OFF Monitor
Bit 7 - Detector Count Monitor
Bit 8 - Real Time Split Monitor
F = Output Bits 1 thru 4

Row		F
0		
1	RR Overlap A - Phases	
2	RR Overlap B - Phases	
3	RR Overlap C - Phases	
4	RR Overlap D - Phases	
5	Ped 2P	_2_____
6	Ped 6P	_____6__
7	Ped 4P	___4____
8	Ped 8P	_____8
9	Yellow Flash Phases	
A	Overlap A - Phases	
B	Overlap B - Phases	
C	Overlap C - Phases	
D	Overlap D - Phases	
E	Restricted Phases	
F	Assign 5 Outputs	

Configuration <E Page>

E + F + ROW

Day of Week

1 = Sunday
2 = Monday
3 = Tuesday
4 = Wednesday
5 = Thursday
6 = Friday
7 = Saturday

Assign 5 Outputs
1 = Right Turn Overlap
2 = TOD Outputs
3 = EV Beacon - Steady
4 = EV Beacon - Flashing
5 = Special Event Outputs
6 = Phase 3 & 7 Ped
7 = Advanced Warning Sign
8 =

Row		E
0	Exclusive Phases	
1	RR-1 Clear Phases	
2	RR-2 Clear Phases	
3	RR-2 Limited Service	
4	Prot / Perm Phases	
5	Overlap A - Green Omit	
6	Overlap B - Green Omit	
7	Overlap C - Green Omit	
8	Overlap D - Green Omit	
9	Overlap Yellow Flash	
A	EV-A Phases	_2__5___
B	EV-B Phases	___4____
C	EV-C Phases	1____6__
D	EV-D Phases	_____8
E	Extra 1 Config. Bits	1_345___
F	IC Select (Interconnect)	_2_____

Configuration

For access, set F + 9 + E = 1 E + E + ROW

Extra 1 Flags
1 = TBC Type 1
2 = NEMA Ext. Coord
3 = Auto Daylight Savings
4 = EV Advance
5 = Remote Download
6 = Special Event
7 = Pretimed Operation
8 = Split Ring Operation

IC Select Flags
1 =
2 = Modem
3 = 7-Wire Slave
4 = Flash / Free
5 =
6 = Simplex Master
7 = 7-Wire Master
8 = Offset Interrupter

Time and Date

8-0 Hour, Minute, Day-of-Week
8-1 Day-of-Month, Year, Month
8-F Seconds

Disable Parity	0	D+B+0

Dial-Up Telephone Communications
(If set to a non-zero value, parity will be disabled)

Program Information

C + C + 0 = program
C + C + F = version

Remote Download

C + 0 + 4 = 1 -255
w/ E + E + E bit 5 on

Row	1 Delay	3 Carry-over	Detector Name	332 Input File	Detector Number
0				1I1	14
1		1.8		2I2U	1
2				2I2L	5
3				2I3U	21
4				2I3L	25
5				2I4	9
6				3I5	16
7				4I6U	3
8				4I6L	7
9				4I7U	23
A				4I7L	27
B				4I8	11
C				1I9U	18
D				3I9L	20
E	---	---	---	---	---
F	---	---	---	---	---

Row	2 Delay	4 Carry-over	Detector Name	332 Input File	Detector Number
0				5J1	13
1		1.8		6J2U	2
2				6J2L	6
3				6J3U	22
4				6J3L	26
5				6J4	10
6				7J5	15
7	10.0			8J6U	4
8				8J6L	8
9				8J7U	24
A				8J7L	28
B				8J8	12
C				5J9U	17
D				7J9L	19
E	---	---	---	---	---
F	---	---	---	---	---

Detector Delay & Carryover <D Page>

D + X (across) + ROW

Row	Detector Numbers	E
A	1 2 3 4 5 6 7 8	12345678
B	9 10 11 12 -- -- -- --	1234____
C	13 14 15 16 17 18 19 20	12345678
D	-- -- -- -- 21 22 23 24	____5678
E	-- -- -- -- -- -- -- --	1234____
F	-- 25 26 27 28 -- -- --	_2345___

Active Detectors <D Page>

Row		0 Detector #
0		
1	System Det. # 1	
2	System Det. # 2	
3	System Det. # 3	
4	System Det. # 4	
5	System Det. # 5	
6	System Det. # 6	
7	System Det. # 7	
8	System Det. # 8	

System Detectors <D Page>

Max ON (min)	5	D+A+E
Max OFF (min)	60	D+A+F

Detector Failure Monitor

Phase Number		F+C+1
Time Before Yellow		F+C+3

Advance Warning Beacon - Sign 1

Phase Number		F+D+1
Time Before Yellow		F+D+3

Advance Warning Beacon - Sign 2

Long Failure	0.5	F+0+6
Short Failure	0.5	F+0+7

Power Cycle Correction (Default = 0.5)

INTERSECTION: LINDA VISTA @ ULRIC

223 Program

Coordination Timing By: KH&A
Implemented On: 2/3/2010

Row	Column # --->	Plan 1	2	3	4	5	6	7	8	9
	Plan Name --->				AM	PM				
0	Cycle Length				90	110				
1	Phase 1 - ForceOff				71	35				
2	Phase 2 - ForceOff				15	0				
3	Phase 3 - ForceOff									
4	Phase 4 - ForceOff				49	69				
5	Phase 5 - ForceOff				15	87				
6	Phase 6 - ForceOff				0	0				
7	Phase 7 - ForceOff									
8	Phase 8 - ForceOff				49	69				
9	Ring Offset									
A	Offset A				47	12				
B	Offset B									
C	Offset C									
D	Permissive				15	11				
E	Hold Release				255	255				
F	Ped Shift				0	0				

Coordination <C Page>

C + Plan + ROW

FOR OBSERVATION ONLY

Master Plan	C + A + 2
Current Plan	C + A + 3
Next Plan	C + A + 4
T.O.D. Plan	C + A + 5
Master Cycle	C + A + 0
Ring A Cycle	C + B + 0
Ring B Cycle	C + D + 0
Min Cycle	C + A + E
Max Cycle	C + B + E

Row	Time	Plan	Offset	Day of Week
0	07 : 00	4	A	_23456_
1	09 : 00	E	A	_23456_
2	14 : 30	5	A	_23456_
3	17 : 00	E	A	1234567
4	:			
5	:			
6	:			
7	:			
8	:			
9	:			
A	:			
B	:			
C	:			
D	:			
E	:			
F	:			

TOD Coordination

<9 Key with C+0+9=1>

	E	Row		F
		0	Free Lag	_2_4_6_8
Plan 1		1	Plan 1 - Lag	
Plan 2		2	Plan 2 - Lag	
Plan 3		3	Plan 3 - Lag	
Plan 4	_____6__	4	Plan 4 - Lag	_2_45__8
Plan 5	_2___6__	5	Plan 5 - Lag	1__4_6_8
Plan 6		6	Plan 6 - Lag	
Plan 7		7	Plan 7 - Lag	
Plan 8		8	Plan 8 - Lag	
Plan 9		9	Plan 9 - Lag	
Coord Ped*		A	Coord Max *	
NEMA Hold		B	Coord Lag *	
		C		
		D		
		E		
		F		

Sync Phases **Lag Phases** <C Page>

C + E + FUNCTION # C + F + FUNCTION #

Transition Type	0

TBC Transition
C + D + D

Plan Select
1 thru 9 = Coordination Plan 1 thru 9
14 or E = Free
15 or F = Flash

Transition Type
0 = Shortway
Non-zero = Lengthen

INTERSECTION: E. Mission Bay Dr/ Pacific Highway @ Sea World Dr

223 F[illegible] am

Group Assignment:
Field Master Assignment:

N/S Street Name: Sea World Dr
E/W Street Name: E. Mission Bay Dr/ Pacific Highway

Last Database Change:
System Ref. Number:

Row	Column # ---> / Phase # --->	1	2	3	4	5	6	7	8
		Sea World			E. Mission Bay		Sea World		Pacific Highway
		Phase							
0	Ped Walk		7		7		7		7
1	Ped FDW		22		24		27		22
2	Min Green	4	10	4	4	4	10	4	4
3	Type 3 Limit								
4	Add/Veh								
5	Veh Extn	2.0	4.4	2.0	3.0	2.0	4.2	2.0	2.0
6	Max Gap	2.0	4.4	2.0	3.0	2.0	4.2	2.0	2.0
7	Min Gap	2.0	0.2	2.0	3.0	2.0	0.2	2.0	2.0
8	Max Limit	30	70	30	30	30	70	30	30
9	Max Limit 2								
A	Bus Adv								
B	Call to Phs								
C	Reduce By		0.1				0.1		
D	Every		0.7				0.7		
E	Yellow	3.4	4.3	3.4	4.1	3.4	4.2	3.4	4.5
F	Red Clear	1.0	1.0	1.0	1.0	1.0	1.0	1.0	1.0

Phase Timing - Bank 1
F + Phase + Row

<F Page>

	E
RR-1 Delay	
RR-1 Clear	
EV-A Delay	0
EV-A Clear	0
EV-B Delay	0
EV-B Clear	0
EV-C Delay	0
EV-C Clear	0
EV-D Delay	0
EV-D Clear	0
RR-2 Delay	
RR-2 Clear	
View EV Delay	---
View EV Clear	---
View RR Delay	---
View RR Clear	---

Preempt Timing
F + E + Row

	F
Permit	12345678
Red Lock	
Yellow Lock	
Min Recall	
Ped Recall	
Peds (View)	_2_4_6_8
Rest In Walk	
Red Rest	
Dbl Entry	
Max Recall	
Soft Recall	_2___6__
Max 2	
Cond Serv	
Ped Lock	12345678
Yellow Start	_2___6__
1st Phases	__3___7_

Phase Functions <F Page>
F + F + Row

Max Initial	0	F + 0 + E
Red Revert	5.0	F + 0 + F
All Red Start	0.0	F + C + O

Start / Revert Times

Drop Number	2	C + 0 + 0
Zone Number	2	C + 0 + 1
Area Number	5	C + 0 + 2
Area Address	85	C + 0 + 3
QuicNet Channel	COM52	(QuicNet)

Communication Addresses

C + F + O	F	Row
Free Lag	_2_4_6_8	0

Lag Phases <C Page>

Overlap Timing

	Row	9 Green Clear	C Yellow Change	D Red Clear	0 Load-Switch #
Overlap A	A				
Overlap B	B				
Overlap C	C				
Overlap D	D				

<F Page>
F + COLOR +

<D Page>
D + 0 + OVERLAP

Manual Plan	14	C + A + 1
Manual Offset	0	C + B + 1

Manual Selection

Manual Plan
0 = Automatic
1-9 = Plan 1-9
14 = Free
15 = Flash

Manual Offset
0 = Automatic
1 = Offset A
2 = Offset B
3 = Offset C

Downtime Flash	255	(minutes)

Downtime Before Auto Manual Flash
F + 0 +8

Disable Ports	_234_

Disable Communication Ports
D + D + 9

Timing Sheet By: KT
Approved By: FLG
Drawing Number: 19078-D-7
Timing Implemented On:

INTERSECTION: E. Mission Bay Dr/ Pacific Highway / Sea World Dr

223 Program

Row	Time	Function	Day of Week	Column F Phases/Bits
0	:			
1	:			
2	:			
3	:			
4	:			
5	:			
6	:			
7	:			
8	:			
9	:			
A	:			
B	:			
C	:			
D	:			
E	:			
F	:			

TOD Function

7 + ROW

<D Page>

D + F + ROW

T.O.D. Functions
0 = Permitted Phases
1 = Red Lock
2 = Yellow Lock
3 = Veh Min Recall
4 = Ped Recall
5 =
6 = Rest In Walk
7 = Red Rest
8 = Double Entry
9 = Veh Max Recall
A = Veh Soft Recall
B = Maximum 2
C = Conditional Service
D = Free Lag Phases
E = Bit 1 - Local Override
Bit 2 - Phase Bank 2
Bit 3 - Phase Bank 3
Bit 4 - Disable Detector OFF Monitor
Bit 7 - Detector Count Monitor
Bit 8 - Real Time Split Monitor
F = Output Bits 1 thru 4

Row		F
0		
1	RR Overlap A - Phases	
2	RR Overlap B - Phases	
3	RR Overlap C - Phases	
4	RR Overlap D - Phases	
5	Ped 2P	2
6	Ped 6P	6
7	Ped 4P	4
8	Ped 8P	8
9	Yellow Flash Phases	
A	Overlap A - Phases	23
B	Overlap B - Phases	67
C	Overlap C - Phases	
D	Overlap D - Phases	
E	Restricted Phases	
F	Assign 5 Outputs	1

Configuration

<E Page>

E + F + ROW

Day of Week

1 = Sunday
2 = Monday
3 = Tuesday
4 = Wednesday
5 = Thursday
6 = Friday
7 = Saturday

Assign 5 Outputs
1 = Right Turn Overlap
2 = TOD Outputs
3 = EV Beacon - Steady
4 = EV Beacon - Flashing
5 = Special Event Outputs
6 = Phase 3 & 7 Ped
7 = Advanced Warning Sign
8 =

Row		E
0	Exclusive Phases	
1	RR-1 Clear Phases	
2	RR-2 Clear Phases	
3	RR-2 Limited Service	
4	Prot / Perm Phases	
5	Overlap A - Green Omit	2
6	Overlap B - Green Omit	6
7	Overlap C - Green Omit	
8	Overlap D - Green Omit	
9	Overlap Yellow Flash	
A	EV-A Phases	2 5
B	EV-B Phases	4 7
C	EV-C Phases	1 6
D	EV-D Phases	3 8
E	Extra 1 Config. Bits	1 345
F	IC Select (Interconnect)	2

Extra 1 Flags
1 = TBC Type 1
2 = NEMA Ext. Coord
3 = Auto Daylight Savings
4 = EV Advance
5 = Remote Download
6 = Special Event
7 = Pretimed Operation
8 = Split Ring Operation

IC Select Flags
1 =
2 = Modem
3 = 7-Wire Slave
4 = Flash / Free
5 =
6 = Simplex Master
7 = 7-Wire Master
8 = Offset Interrupter

Configuration

For access, set F + 9 + E = 1

E + E + ROW

Time and Date
8-0 Hour, Minute, Day-of-Week
8-1 Day-of-Month, Year, Month
8-F Seconds

Disable Parity	0	D+B+0

Dial-Up Telephone Communications
(If set to a non-zero value, parity will be disabled)

Program Information
C + C + 0 = program
C + C + F = version

Remote Download
C + 0 + 4 = 1 -255
w/ E + E + E bit 5 on

INTERSECTION: E. Mission Bay Dr/ Pacific Highway / Sea World Dr — 223 Program

Row	1 Delay	3 Carry-over
0		
1		1.8
2		
3		
4		
5		
6		
7	10.0	
8		
9		
A		
B		
C		
D		
E	---	---
F	---	---

Detector Name	332 Input File	Detector Number
	1I1	14
	2I2U	1
	2I2L	5
	2I3U	21
	2I3L	25
	2I4	9
	3I5	16
	4I6U	3
	4I6L	7
	4I7U	23
	4I7L	27
	4I8	11
	1I9U	18
	3I9L	20
---	---	---
---	---	---

Row	2 Delay	4 Carry-over
0		
1		1.8
2		
3		
4		
5		
6		
7	10.0	
8		
9		
A		
B		
C		
D		
E	---	---
F	---	---

Detector Name	332 Input File	Detector Number
	5J1	13
	6J2U	2
	6J2L	6
	6J3U	22
	6J3L	26
	6J4	10
	7J5	15
	8J6U	4
	8J6L	8
	8J7U	24
	8J7L	28
	8J8	12
	5J9U	17
	7J9L	19
---	---	---
---	---	---

Detector Delay & Carryover <D Page>

D + X (across) + ROW

Row	Detector Numbers	E
A	1 2 3 4 5 6 7 8	12345678
B	9 10 11 12 -- -- -- --	1234____
C	13 14 15 16 17 18 19 20	12345678
D	-- -- -- -- 21 22 23 24	____5678
E	-- -- -- -- -- -- -- --	1234____
F	-- 25 26 27 28 -- -- --	_2345___

Active Detectors <D Page>

Row		0 Detector #
1		
2	System Det. # 1	
3	System Det. # 2	
4	System Det. # 3	
5	System Det. # 4	
6	System Det. # 5	
7	System Det. # 6	
8	System Det. # 7	
9	System Det. # 8	

System Detectors <D Page>

Max ON (min)	5	D+A+E
Max OFF (min)	60	D+A+F

Detector Failure Monitor

Phase Number	0	F+C+1
Time Before Yellow	0.0	F+C+3

Advance Warning Beacon - Sign 1

Phase Number	0	F+D+1
Time Before Yellow	0.0	F+D+3

Advance Warning Beacon - Sign 2

Long Failure	0.5	F+0+6
Short Failure	0.5	F+0+7

Power Cycle Correction (Default = 0.5)

INTERSECTION: MORENA BLVD @ NAPA ST/SHERMAN S

223 Pr m

Group Assignment:
Field Master Assignment:

N/S Street Name: MORENA
E/W Street Name: NAPA/SHERMAN

N

Row	Column # ----> / Phase # ---->	1 (1+8)	2	3	4	5	6	7	8
		MORENA				MORENA			NAPA/SHERMAN
		Phase							
0	Ped Walk		7				7		7
1	Ped FDW		13				22		19
2	Min Green	4	10			4	10		7
3	Type 3 Limit								
4	Add/Veh								
5	Veh Extn	2.0	3.7			2.0	2.6		2.0
6	Max Gap	2.0	3.7			2.0	2.6		2.0
7	Min Gap	2.0	0.2			2.0	0.2		2.0
8	Max Limit	30	60			30	60		40
9	Max Limit 2	40							
A	Bus Adv								
B	Call to Phs								
C	Reduce By		0.1				0.1		
D	Every		0.9				1.2		
E	Yellow	3.4	4.1			3.4	4.3		3.9
F	Red Clear	1.0	1.0			1.0	1.0		1.0

Phase Timing - Bank 1
F + Phase + Row

<F Page>

	E
RR-1 Delay	
RR-1 Clear	
EV-A Delay	0
EV-A Clear	0
EV-B Delay	
EV-B Clear	
EV-C Delay	0
EV-C Clear	0
EV-D Delay	
EV-D Clear	
RR-2 Delay	
RR-2 Clear	
View EV Delay	---
View EV Clear	---
View RR Delay	---
View RR Clear	---

F + E + Row

Row		F
0	Permit	12__56_8
1	Red Lock	
2	Yellow Lock	
3	Min Recall	_2___6__
4	Ped Recall	
5	Peds (View)	_2___6_8
6	Rest In Walk	
7	Red Rest	
8	Dbl Entry	
9	Max Recall	
A	Soft Recall	
B	Max 2	
C	Cond Serv	
D	Ped Lock	12345678
E	Yellow Start	_2___6__
F	1st Phases	_____8

F + F + Row

Max Initial	0	F + 0 + E
Red Revert	5.0	F + 0 + F
All Red Start	0.0	F + C + O

Start / Revert Times

Drop Number	13	C + 0 + 0
Zone Number	13	C + 0 + 1
Area Number	5	C + 0 + 2
Area Address	108	C + 0 + 3
QuicNet Channel	COM 52	(QuicNet)

Communication Addresses

C + F + O	F	Row
Free Lag	1___6_8	0

Lag Phases <C Page>

Overlap Timing

	Row	9 Green Clear	C Yellow Change	D Red Clear	0 Load-Switch #
Overlap A	A				
Overlap B	B				
Overlap C	C				
Overlap D	D				

<F Page> F + COLOR +

<D Page> D + 0 + OVERLAP

Manual Plan	0	C + A + 1
Manual Offset	0	C + B + 1

Manual Selection

Manual Plan
0 = Automatic
1-9 = Plan 1-9
14 = Free
15 = Flash

Manual Offset
0 = Automatic
1 = Offset A
2 = Offset B
3 = Offset C

Downtime Flash	255	(minutes)

Downtime Before Auto Manual Flash
F + 0 +8

Disable Ports	_234____

Disable Communication Ports
D + D + 9

Timing Sheet By: M2S
Approved By: FLG
Drawing Number: 25887-7-D
Timing Implemented On: 04/12/10

INTERSECTION: MORENA BLVD @ NAPA ST/SHERMAN ST

Row	Time	Function	Day of Week	Column F Phases/Bits
0	12 : 30	B	_23456_	1_____
1	18 : 30	B	_23456_	
2	00 : 01	E	1234567	1_____
3				
4				
5				
6				
7				
8				
9				
A				
B				
C				
D				
E				
F				

TOD Function

7 + ROW

<D Page>

D + F + ROW

T.O.D. Functions
0 = Permitted Phases
1 = Red Lock
2 = Yellow Lock
3 = Veh Min Recall
4 = Ped Recall
5 =
6 = Rest In Walk
7 = Red Rest
8 = Double Entry
9 = Veh Max Recall
A = Veh Soft Recall
B = Maximum 2
C = Conditional Service
D = Free Lag Phases
E = Bit 1 - Local Override
Bit 2 - Phase Bank 2
Bit 3 - Phase Bank 3
Bit 4 - Disable Detector OFF Monitor
Bit 7 - Detector Count Monitor
Bit 8 - Real Time Split Monitor
F = Output Bits 1 thru 4

Row		F
0		
1	RR Overlap A - Phases	
2	RR Overlap B - Phases	
3	RR Overlap C - Phases	
4	RR Overlap D - Phases	
5	Ped 2P	_2_____
6	Ped 6P	_____6__
7	Ped 4P	
8	Ped 8P	_____8
9	Yellow Flash Phases	
A	Overlap A - Phases	1_____8
B	Overlap B - Phases	
C	Overlap C - Phases	
D	Overlap D - Phases	
E	Restricted Phases	
F	Assign 5 Outputs	1_____

Configuration

<E Page>

E + F + ROW

Day of Week

1 = Sunday
2 = Monday
3 = Tuesday
4 = Wednesday
5 = Thursday
6 = Fridey
7 = Saturday

Assign 5 Outputs
1 = Right Turn Overlap
2 = TOD Outputs
3 = EV Beacon - Steady
4 = EV Beacon - Flashing
5 = Special Event Outputs
6 = Phase 3 & 7 Ped
7 = Advanced Warning Sign
8 = Bus Advance

Row		E
0	Exclusive Phases	
1	RR-1 Clear Phases	
2	RR-2 Clear Phases	
3	RR-2 Limited Service	
4	Prot / Perm Phases	
5	Overlap A - Green Omit	_____8
6	Overlap B - Green Omit	
7	Overlap C - Green Omit	
8	Overlap D - Green Omit	
9	Overlap Yellow Flash	
A	EV-A Phases	_2__5___
B	EV-B Phases	
C	EV-C Phases	1____6__
D	EV-D Phases	
E	Extra 1 Config. Bits	1_345___
F	IC Select (Interconnect)	_2_____

Configuration

For access, set F + 9 + E = 1

E + E + ROW

Extra 1 Flags
1 = TBC Type 1
2 = NEMA Ext. Coord
3 = Auto Daylight Savings
4 = EV Advance
5 = Remote Download
6 = Special Event
7 = Pretimed Operation
8 = Split Ring Operation

IC Select Flags
1 =
2 = Modem
3 = 7-Wire Slave
4 = Flash / Free
5 =
6 = Simplex Master
7 = 7-Wire Master
8 = Offset Interrupter

Time and Date

8-0 Hour, Minute, Day-of-Week
8-1 Day-of-Month, Year, Month
8-F Seconds

Disable Parity	0	D+B+0

Dial-Up Telephone Communications
(If set to a non-zero value, parity will be disabled)

Program Information

C + C + 0 = program
C + C + F = version

Remote Download

C + 0 + 4 = 1 -255
w/ E + E + E bit 5 on

Row	1 Delay	3 Carry-over
0		
1		1.8
2		
3		
4		
5		
6		
7		
8		
9		
A		
B		
C		
D		
E	---	---
F	---	---

Detector Name	332 Input File	Detector Number
	1I1	14
	2I2U	1
	2I2L	5
	2I3U	21
	2I3L	25
	2I4	9
	3I5	16
	4I6U	3
	4I6L	7
	4I7U	23
	4I7L	27
	4I8	11
	1I9U	18
	3I9L	20
---	---	---
---	---	---

Row	2 Delay	4 Carry-over
0		
1		1.8
2		
3		
4		
5		
6		
7	10.0	
8		
9	10.0	
A		
B		
C		
D		
E	---	---
F	---	---

Detector Name	332 Input File	Detector Number
	5J1	13
	6J2U	2
	6J2L	6
	6J3U	22
	6J3L	26
	6J4	10
	7J5	15
	8J6U	4
	8J6L	8
	8J7U	24
	8J7L	28
	8J8	12
	5J9U	17
	7J9L	19
---	---	---
---	---	---

Detector Delay & Carryover <D Page>

D + X (across) + ROW

Row	Detector Numbers	E
A	1 2 3 4 5 6 7 8	12345678
B	9 10 11 12 -- -- -- --	1234____
C	13 14 15 16 17 18 19 20	12345678
D	-- -- -- -- 21 22 23 24	____5678
E	-- -- -- -- -- -- -- --	1234____
F	-- 25 26 27 28 -- -- --	_2345___

Active Detectors <D Page>

Row		0 Detector #
0		
1	System Det. # 1	
2	System Det. # 2	
3	System Det. # 3	
4	System Det. # 4	
5	System Det. # 5	
6	System Det. # 6	
7	System Det. # 7	
8	System Det. # 8	

System Detectors <D Page>

Max ON (min)	5	D+A+E
Max OFF (min)	60	D+A+F

Detector Failure Monitor

Phase Number		F+C+1
Time Before Yellow		F+C+3

Advance Warning Beacon - Sign 1

Phase Number		F+D+1
Time Before Yellow		F+D+3

Advance Warning Beacon - Sign 2

Long Failure	0.5	F+0+6
Short Failure	0.5	F+0+7

Power Cycle Correction (Default = 0.5)

INTERSECTION: MORENA BLVD @ NAPA ST/SHERMAN ST

223 Program

Coordination Timing By: KH&A
Implemented On: 1/26/2010

Row	Column # --->	Plan 1	2	3	4	5	6	7	8	9
	Plan Name --->		Mid & Weekend			AM	PM			
0	Cycle Length		96			110	136			
1	Phase 1 - ForceOff		52			43	0			
2	Phase 2 - ForceOff		0			0	70			
3	Phase 3 - ForceOff									
4	Phase 4 - ForceOff									
5	Phase 5 - ForceOff		88			98	58			
6	Phase 6 - ForceOff		0			0	0			
7	Phase 7 - ForceOff									
8	Phase 8 - ForceOff		75			74	35			
9	Ring Offset									
A	Offset A		77			32	6			
B	Offset B									
C	Offset C									
D	Permissive		10			11	14			
E	Hold Release		255			255	255			
F	Ped Shift		0			0	0			

Coordination <C Page>

C + Plan + ROW

FOR OBSERVATION ONLY

Master Plan	C + A + 2
Current Plan	C + A + 3
Next Plan	C + A + 4
T.O.D. Plan	C + A + 5
Master Cycle	C + A + 0
Ring A Cycle	C + B + 0
Ring B Cycle	C + D + 0
Min Cycle	C + A + E
Max Cycle	C + B + E

Row	Time	Plan	Offset	Day of Week
0	06 : 30	5	A	_23456_
1	09 : 00	2	A	1_____7
2	10 : 30	2	A	_23456_
3	13 : 30	6	A	_23456_
4	18 : 00	2	A	_23456_
5	19 : 00	E	A	1_____7
6	20 : 00	E	A	1234567
7				
8				
9				
A				
B				
C				
D				
E				
F				

TOD Coordination

<9 Key with C+0+9=1>

	E	Row		F
		0	Free Lag	
Plan 1		1	Plan 1 - Lag	
Plan 2	_2___6__	2	Plan 2 - Lag	1____6_8
Plan 3		3	Plan 3 - Lag	
Plan 4		4	Plan 4 - Lag	
Plan 5	_2___6__	5	Plan 5 - Lag	1____6_8
Plan 6	1____6__	6	Plan 6 - Lag	1____6_8
Plan 7		7	Plan 7 - Lag	
Plan 8		8	Plan 8 - Lag	
Plan 9		9	Plan 9 - Lag	
Coord Ped*		A	Coord Max *	_2_____
NEMA Hold		B	Coord Lag *	
		C		
		D		
		E		
		F		

Sync Phases

C + E + FUNCTION #

Lag Phases <C Page>

C + F + FUNCTION #

Transition Type	0

TBC Transition
C + D + D

Plan Select
1 thru 9 = Coordination Plan 1 thru 9
14 or E = Free
15 or F = Flash

Transition Type
0 = Shortway
Non-zero = Lengthen

NTERSECTION: Morena Bl & Napa St/Sherman St

223 gram

Group Assignment:
Field Master Assignment:

N/S Street Name: Morena Bl
E/W Street Name: Napa/Sherman

Last Change: 03/25/99 Drawing Number: 25887-7-D
Timing Sheet By: FLG Sys. Ref. Number:
Approved By: Timing implemented on:

N

Column # --->	Morena Bl				Morena Bl			Napa/Sherman
Phase # --->	1	2	3	4	5	6	7	8
Row								
0 Ped Walk		7				7		7
1 Ped FDW		18				21		20
2 Min Green	4	10			4	10		4
3 Type 3 Limit								
4 Add/Veh								
5 Veh Extn	2.0	3.7			2.0	3.2		2.0
6 Max Gap	2.0	3.7			2.0	3.2		2.0
7 Min Gap	2.0	0.2			2.0	0.2		2.0
8 Max Limit	30	60			30	60		40
9 Max Limit 2	40							
A Bus Adv								
B Call to Phs								
C Reduce By		0.1				0.1		
D Every		0.9				1.0		
E Yellow	3.4 ~~3.0~~	3.9			3.4 ~~3.0~~	4.2		3.9 ~~3.2~~
F Red Clear	1.0	1.0			1.0	1.0		1.0

DOC 1/31/03

Phase Timing - Bank 1
F + Phase + Row

	E
RR-1 Delay	
RR-1 Clear	
EV-A Delay	0
EV-A Clear	0
EV-B Delay	
EV-B Clear	
EV-C Delay	0
EV-C Clear	0
EV-D Delay	
EV-D Clear	
RR-2 Delay	
RR-2 Clear	
View EV Delay	---
View EV Clear	---
View RR Delay	---
View RR Clear	---

Preempt Timing <F Page>
F + E + Row

Row		F
0	Permit	12__56_8
1	Red Lock	
2	Yellow Lock	
3	Min Recall	_2___6__
4	Ped Recall	
5	Peds (View)	_2___6_8
6	Rest In Walk	
7	Red Rest	
8	Dbl Entry	
9	Max Recall	
A	Soft Recall	
B	Max 2	
C	Cond Serv	
D	Ped Lock	12345678
E	Yellow Start	_2___6__
F	1st Phases	_____8

Phase Functions <F Page>
F + F + Row

Max Initial	0
Red Revert	5.0
All Red Start	0.0

F + 0 + E
F + 0 + F
F + C + O

Start / Revert Times

Drop Number	13 ~~5~~	C + 0 + 0
Zone Number	13	C + 0 + 1
Area Number	5	C + 0 + 2
Area Address	108	C + 0 + 3
QuicNet Channel	Com 52	(QuicNet)

Communication Addresses

Row		9 Green Clear	C Yellow Change	D Red Clear	0 Load-Switch #
A	Overlap A				
B	Overlap B				
C	Overlap C				
D	Overlap D				

Overlap Timing <F Page> <D Page>
F + COLOR + D + 0 + OVERLAP

Manual Plan	0
Manual Offset	0

C + A + 1
C + B + 1

Manual Selection

Manual Plan
0 = Automatic
1-9 = Plan 1-9
14 = Free
15 = Flash

Manual Offset 0
= Automatic
1 = Offset A
2 = Offset B
3 = Offset C

C + F + O

	F	Row
Free Lag	1___6_8	0

Lag Phases <C Page>

Downtime Flash	~~60~~ 255 (minutes)

Downtime Before Auto Manual Flash
F + 0 + 8

Disable Ports	234

Disable Communications Ports
D + D + 9

3

INTERSECTION: Morena Bl & Napa St/Sherman St

Row	Time	Function	Day of Week	Column F Phases/Bits
0	12:30	B	_23456_	1_____
1	18:30	B	_23456_	
2	0001	E	1234567	1 _____
3				
4				
5				
6				
7				
8				
9				
A				
B				
C				
D				
E				
F				

TOD Function <D Page>

7 + ROW D + F + ROW

T.O.D. Functions
0 = Permitted Phases
1 = Red Lock
2 = Yellow Lock
3 = Veh Min Recall
4 = Ped Recall
5 =
6 = Rest In Walk
7 = Red Rest
8 = Double Entry
9 = Veh Max Recall
A = Veh Soft Recall
B = Maximum 2
C = Conditional Service
D = Free Lag Phases
E = Bit 1 - Local Override
Bit 2 - Phase Bank 2
Bit 3 - Phase Bank 3
Bit 4 - Disable Detector OFF Monitor
Bit 7 - Detector Count Monitor
Bit 8 - Real Time Split Monitor
F = Output Bits 1 thru 4

Row		F
0		
1	RR Overlap A - Phases	
2	RR Overlap B - Phases	
3	RR Overlap C - Phases	
4	RR Overlap D - Phases	
5	Ped 2P	_2_____
6	Ped 6P	_____6__
7	Ped 4P	
8	Ped 8P	_____8
9	Yellow Flash Phases	
A	Overlap A - Phases	1_____8
B	Overlap B - Phases	
C	Overlap C - Phases	
D	Overlap D - Phases	
E	Restricted Phases	
F	Assign 5 Outputs	1_____

Configuration <E Page>

E + F + ROW

Day of Week

1 = Sunday
2 = Monday
3 = Tuesday
4 = Wednesday
5 = Thursday
6 = Friday
7 = Saturday

Assign 5 Outputs
1 = Right Turn Overlap
2 = TOD Outputs
3 = EV Beacon - Steady
4 = EV Beacon - Flashing
5 = Special Event Outputs
6 = Phase 3 & 7 Ped
7 = Advanced Warning Sign
8 =

Row		E
0	Exclusive Phases	
1	RR-1 Clear Phases	
2	RR-2 Clear Phases	
3	RR-2 Limited Service	
4	Prot / Perm Phases	
5	Overlap A - Green Omit	_____8
6	Overlap B - Green Omit	
7	Overlap C - Green Omit	
8	Overlap D - Green Omit	
9	Overlap Yellow Flash	
A	EV-A Phases	_2__5___
B	EV-B Phases	
C	EV-C Phases	1____6__
D	EV-D Phases	
E	Extra 1 Config. Bits	1_345___
F	IC Select (Interconnect)	2_____

Configuration

For access, set F + 9 + E = 1 E + E + ROW

Extra 1 Flags
1 = TBC Type 1
2 = NEMA Ext. Coord
3 = Auto Daylight Savings
4 = EV Advance
5 = Remote Download
6 = Special Event
7 = Pretimed Operation
8 = Split Ring Operation

IC Select Flags
1 =
2 = Modem
3 = 7-Wire Slave
4 = Flash / Free
5 =
6 = Simplex Master
7 = 7-Wire Master
8 = Offset Interrupter

Time and Date

8-0 Hour, Minute, Day-of-Week
8-1 Day-of-Month, Yeer, Month
8-F Seconds

Disable Parity	0	D+B+0

Dial-Up Telephone Communications

(If set to a non-zero value, parity will be disabled)

(This parameter is NOT downloaded)

Program Information

C + C + 0 = program
C + C + F = version

Remote Download

C + 0 + 4 = 1 -255
w/ E + E + E bit 5 on

Row	1 Delay	3 Carry-over
0		
1		1.8
2		
3		
4		
5		
6		
7		
8		
9		
A		
B		
C		
D		
E		---
F	---	---

Detector Name	332 Input File	Detector Number
	1I1	14
	2I2U	1
	2I2L	5
	2I3U	21
	2I3L	25
	2I4	9
	3I5	16
	4I6U	3
	4I6L	7
	4I7U	23
	4I7L	27
	4I8	11
	1I9U	18
	3I9L	20
---	---	---
---	---	---

Row	2 Delay	4 Carry-over
0		
1		1.8
2		
3		
4		
5		
6		
7	10.0	
8		
9	10.0	
A		
B		
C		
D		
E	---	---
F	---	---

Detector Name	332 Input File	Detector Number
	5J1	13
	6J2U	2
	6J2L	6
	6J3U	22
	6J3L	26
	6J4	10
	7J5	15
	8J6U	4
	8J6L	8
	8J7U	24
	8J7L	28
	8J8	12
	5J9U	17
	7J9L	19
---	---	---
---	---	---

Detector Delay & Carryover <D Page>

D + X (across) + ROW

Row	Detector Numbers	E
A	1 2 3 4 5 6 7 8	12345678
B	9 10 11 12 -- -- -- --	1234
C	13 14 15 16 17 18 19 20	12345678
D	-- -- -- -- 21 22 23 24	5678
E	-- -- -- -- -- -- -- --	1234
F	-- 25 26 27 28 -- -- --	2345

Active Detectors <D Page>

Row		0 Detector #
0		
1	System Det. # 1	0
2	System Det. # 2	0
3	System Det. # 3	0
4	System Det. # 4	0
5	System Det. # 5	0
6	System Det. # 6	0
7	System Det. # 7	0
8	System Det. # 8	0

System Detectors <D Page>

Max ON (min)	5	D+A+E
Max OFF (min)	60	D+A+F

Detector Failure Monitor

Phase Number	0	F+C+1
Time Before Yellow	0.0	F+C+3

Advance Warning Beacon - Sign 1

Phase Number	0	F+D+1
Time Before Yellow	0.0	F+D+3

Advance Warning Beacon - Sign 2

Long Failure	0.5	F+0+6
Short Failure	0.5	F+0+7

Power Cycle Correction (Default = 0.5)

(These parameters are NOT downloaded.)

INTERSECTION: Morena Bl & Napa St/Sherman St

223 Program

Doc 4/17/03

Coordination Timing By: FLG
Implemented On: 03/25/99

Row	Plan Name --->	1 AM	2 Mid & Weekend	3 PM	4	5	6	7	8	9
0	Cycle Length	108 ~~98~~	96	120						
1	Phase 1 - ForceOff	48 ~~38~~	52	63						
2	Phase 2 - ForceOff	0	0	0						
3	Phase 3 - ForceOff									
4	Phase 4 - ForceOff									
5	Phase 5 - ForceOff	100 ~~90~~	88	105						
6	Phase 6 - ForceOff	0	0	0						
7	Phase 7 - ForceOff									
8	Phase 8 - ForceOff	80 ~~69~~	75	90						
9	Ring Offset									
A	Offset A	90	77	71						
B	Offset B									
C	Offset C									
D	Permissive	10	10	12						
E	Hold Release	255	255	255						
F	Ped Shift	0	0	0						

Column # ---> (Plan)

Coordination <C Page>
C + Plan + ROW

FOR OBSERVATION ONLY

Master Plan	C + A + 2
Current Plan	C + A + 3
Next Plan	C + A + 4
T.O.D. Plan	C + A + 5
Master Cycle	C + A + 0
Ring A Cycle	C + B + 0
Ring B Cycle	C + D + 0
Min Cycle	C + A + E
Max Cycle	C + B + E

Row	Time	Plan	Offset	Day of Week
0	06:30	1	A	_23456_
1	09:00	2	A	1_____7
2	10:30	2	A	_23456_
3	13:30	3	A	_23456_
4	18:00	2	A	_23456_
5	19:00	E	A	1_____7
6	20:00	E	A	1234567
7				
8				
9				
A				
B				
C				
D				
E				
F				

TOD Coordination
<9 Key with C+0+9=1>

	E	Row		F
		0	Free Lag	1____6_8
Plan 1	_2___6__	1	Plan 1 - Lag	1____6_8
Plan 2	_2___6__	2	Plan 2 - Lag	1____6_8
Plan 3	_2___6__	3	Plan 3 - Lag	1____6_8
Plan 4		4	Plan 4 - Lag	
Plan 5		5	Plan 5 - Lag	
Plan 6		6	Plan 6 - Lag	
Plan 7		7	Plan 7 - Lag	
Plan 8		8	Plan 8 - Lag	
Plan 9		9	Plan 9 - Lag	
Coord Ped*		A	Coord Max *	
NEMA Hold		B	Coord Lag *	
		C		
		D		
		E		
		F		

Sync Phases — Lag Phases <C Page>
C + E + FUNCTION # — C + F + FUNCTION #

Transition Type	0

TBC Transition
C + D + D

Plan Select
1 thru 9 = Coordination Plan 1 thru 9
14 or E = Free
15 or F = Flash

Transition Type
0 = Shortway
Non-zero = Lengthen

INTERSECTION: Morena Blvd @ Tecolote Rd

223 Program

Group Assignment:
Field Master Assignment:

N/S Street Name: **Morena Blvd**
E/W Street Name: **Tecolote Rd**

Last Database Change:
System Ref. Number:

Tecolote Rd — Morena Blvd

Row	Column # ---> / Phase # --->	Phase 1	2	3	4	5	6	7	8
0	Ped Walk	7	7	7					
1	Ped FDW	10	22	20					
2	Min Green	7	7	7	10				
3	Type 3 Limit								
4	Add/Veh		2.0						
5	Veh Extn	3.0	5.0	3.0	3.0				
6	Max Gap	3.0	5.0	3.0	3.0				
7	Min Gap	3.0	2.0	3.0	3.0				
8	Max Limit	30	45	45	45				
9	Max Limit 2								
A	Bus Adv								
B	Call to Phs								
C	Reduce By		0.1						
D	Every		1.0						
E	Yellow	3.9	3.9	3.9	3.9				
F	Red Clear	1.0	1.0	1.0	1.0				

Phase Timing - Bank 1
F + Phase + Row

	E
RR-1 Delay	
RR-1 Clear	
EV-A Delay	
EV-A Clear	
EV-B Delay	0
EV-B Clear	0
EV-C Delay	
EV-C Clear	
EV-D Delay	0
EV-D Clear	0
RR-2 Delay	
RR-2 Clear	
View EV Delay	---
View EV Clear	---
View RR Delay	---
View RR Clear	---

<F Page>
Preempt Timing
F + E + Row

Row		F
0	Permit	1234
1	Red Lock	
2	Yellow Lock	1234
3	Min Recall	2
4	Ped Recall	
5	Peds (View)	123
6	Rest In Walk	
7	Red Rest	
8	Dbl Entry	
9	Max Recall	
A	Soft Recall	
B	Max 2	
C	Cond Serv	
D	Ped Lock	12345678
E	Yellow Start	2
F	1st Phases	3

Phase Functions <F Page>
F + F + Row

Max Initial	20
Red Revert	5.0
All Red Start	0.0

F + 0 + E
F + 0 + F
F + C + O

Start / Revert Times

Drop Number	3	C + 0 + 0
Zone Number	3	C + 0 + 1
Area Number	5	C + 0 + 2
Area Address	86	C + 0 + 3
QuicNet Channel	COM52	(QuicNet)

Communication Addresses

Overlap Timing

	Row	9 Green Clear	C Yellow Change	D Red Clear	0 Load-Switch #
Overlap A	A				
Overlap B	B				
Overlap C	C				
Overlap D	D				

<F Page>
F + COLOR +

<D Page>
D + 0 + OVERLAP

Manual Plan	14
Manual Offset	0

C + A + 1
C + B + 1

Manual Selection

Manual Plan
0 = Automatic
1-9 = Plan 1-9
14 = Free
15 = Flash

Manual Offset
0 = Automatic
1 = Offset A
2 = Offset B
3 = Offset C

C + F + O

	F	Row
Free Lag	2 4	0

Lag Phases <C Page>

Downtime Flash	255	(minutes)

Downtime Before Auto Manual Flash
F + 0 +8

Disable Ports	234

Disable Communication Ports
D + D + 9

Timing Sheet By: KT
Approved By: FLG
Drawing Number: 29229-1-D
Timing Implemented On:

INTERSECTION: Morena Blvd @ Tecolote Rd

223 Program

Row	Time	Function	Day of Week	Column F Phases/Bits
0	00 : 01	E	12345678	1
1	:			
2	:			
3	:			
4	:			
5	:			
6	:			
7	:			
8	:			
9	:			
A	:			
B	:			
C	:			
D	:			
E	:			
F	:			

TOD Function

7 + ROW

<D Page>

D + F + ROW

T.O.D. Functions
0 = Permitted Phases
1 = Red Lock
2 = Yellow Lock
3 = Veh Min Recall
4 = Ped Recall
5 =
6 = Rest In Walk
7 = Red Rest
8 = Double Entry
9 = Veh Max Recall
A = Veh Soft Recall
B = Maximum 2
C = Conditional Service
D = Free Lag Phases
E = Bit 1 - Local Override
Bit 2 - Phase Bank 2
Bit 3 - Phase Bank 3
Bit 4 - Disable Detector OFF Monitor
Bit 7 - Detector Count Monitor
Bit 8 - Real Time Split Monitor
F = Output Bits 1 thru 4

Row		F
0		
1	RR Overlap A - Phases	
2	RR Overlap B - Phases	
3	RR Overlap C - Phases	
4	RR Overlap D - Phases	
5	Ped 2P	2
6	Ped 6P	1
7	Ped 4P	3
8	Ped 8P	
9	Yellow Flash Phases	
A	Overlap A - Phases	23
B	Overlap B - Phases	
C	Overlap C - Phases	
D	Overlap D - Phases	
E	Restricted Phases	
F	Assign 5 Outputs	1

Configuration

<E Page>

E + F + ROW

Day of Week

1 = Sunday
2 = Monday
3 = Tuesday
4 = Wednesday
5 = Thursday
6 = Friday
7 = Saturday

Assign 5 Outputs
1 = Right Turn Overlap
2 = TOD Outputs
3 = EV Beacon - Steady
4 = EV Beacon - Flashing
5 = Special Event Outputs
6 = Phase 3 & 7 Ped
7 = Advanced Warning Sign
8 =

Row		E
0	Exclusive Phases	
1	RR-1 Clear Phases	
2	RR-2 Clear Phases	
3	RR-2 Limited Service	
4	Prot / Perm Phases	
5	Overlap A - Green Omit	2
6	Overlap B - Green Omit	
7	Overlap C - Green Omit	
8	Overlap D - Green Omit	
9	Overlap Yellow Flash	
A	EV-A Phases	
B	EV-B Phases	4
C	EV-C Phases	
D	EV-D Phases	3
E	Extra 1 Config. Bits	1_345
F	IC Select (Interconnect)	2

Configuration

For access, set F + 9 + E = 1

E + E + ROW

Extra 1 Flags
1 = TBC Type 1
2 = NEMA Ext. Coord
3 = Auto Daylight Savings
4 = EV Advance
5 = Remote Download
6 = Special Event
7 = Pretimed Operation
8 = Split Ring Operation

IC Select Flags
1 =
2 = Modem
3 = 7-Wire Slave
4 = Flash / Free
5 =
6 = Simplex Master
7 = 7-Wire Master
8 = Offset Interrupter

Time and Date

8-0 Hour, Minute, Day-of-Week
8-1 Day-of-Month, Year, Month
8-F Seconds

Disable Parity	0	D+B+0

Dial-Up Telephone Communications

(If set to a non-zero value, parity will be disabled)

Program Information

C + C + 0 = program
C + C + F = version

Remote Download

C + 0 + 4 = 1 -255
w/ E + E + E bit 5 on

INTERSECTION: Morena Blvd @ Tecolote Rd

223 Program

Row	1 Delay	3 Carry-over
0		
1		
2		
3		
4		
5		
6		
7		
8		
9		
A		
B		
C		
D		
E	---	---
F	---	---

Detector Name	332 Input File	Detector Number
	1I1	14
	2I2U	1
	2I2L	5
	2I3U	21
	2I3L	25
	2I4	9
	3I5	16
	4I6U	3
	4I6L	7
	4I7U	23
	4I7L	27
	4I8	11
	1I9U	18
	3I9L	20
---	---	---
---	---	---

Row	2 Delay	4 Carry-over
0		
1		
2		
3		
4		
5		
6		
7		
8		
9		
A		
B		
C		
D		
E	---	---
F	---	---

Detector Name	332 Input File	Detector Number
	5J1	13
	6J2U	2
	6J2L	6
	6J3U	22
	6J3L	26
	6J4	10
	7J5	15
	8J6U	4
	8J6L	8
	8J7U	24
	8J7L	28
	8J8	12
	5J9U	17
	7J9L	19
---	---	---
---	---	---

Detector Delay & Carryover <D Page>

D + X (across) + ROW

Row	Detector Numbers	E
A	1 2 3 4 5 6 7 8	12345678
B	9 10 11 12 -- -- -- --	1234___
C	13 14 15 16 17 18 19 20	12345678
D	-- -- -- -- 21 22 23 24	____5678
E	-- -- -- -- -- -- -- --	1234___
F	-- 25 26 27 28 -- -- --	_2345___

Active Detectors <D Page>

Row		0 Detector #
1		
2	System Det. # 1	
3	System Det. # 2	
4	System Det. # 3	
5	System Det. # 4	
6	System Det. # 5	
7	System Det. # 6	
8	System Det. # 7	
9	System Det. # 8	

System Detectors <D Page>

Max ON (min)	5	D+A+E
Max OFF (min)	60	D+A+F

Detector Failure Monitor

Phase Number		F+C+1
Time Before Yellow		F+C+3

Advance Warning Beacon - Sign 1

Phase Number		F+D+1
Time Before Yellow		F+D+3

Advance Warning Beacon - Sign 2

Long Failure	0.5	F+0+6
Short Failure	0.5	F+0+7

Power Cycle Correction (Default = 0.5)

INTERSECTION: Morena Bl & W. Morena Bl (south)

223 Program

Group Assignment:
Field Master Assignment:

N/S Street Name: MORENA BL
E/W Street Name: W. MORENA BL

Last Database Change:
System Ref. Number:

N

Row	Column # ---> / Phase # --->	1	2 (Morena)	3	4 (Morena)	5	6 (W. Morena)	7	8
0	Ped Walk								
1	Ped FDW								
2	Min Green		10		10		10		
3	Type 3 Limit								
4	Add/Veh		2.0		2.0		2.0		
5	Veh Extn		3.8		8.0		3.8		
6	Max Gap		3.8		8.0		3.8		
7	Min Gap		2.0		2.5		2.0		
8	Max Limit		60		60		60		
9	Max Limit 2								
A	Bus Adv								
B	Call to Phs								
C	Reduce By		0.1		0.1		0.1		
D	Every		1.7		0.5		1.7		
E	Yellow		4.0		3.9		4.8		
F	Red Clear		1.0		1.0		1.0		

Phase Timing - Bank 1
F + Phase + Row

<F Page>

	E
RR-1 Delay	
RR-1 Clear	
EV-A Delay	0
EV-A Clear	0
EV-B Delay	
EV-B Clear	
EV-C Delay	0
EV-C Clear	0
EV-D Delay	
EV-D Clear	
RR-2 Delay	
RR-2 Clear	
View EV Delay	---
View EV Clear	---
View RR Delay	---
View RR Clear	---

Preempt Timing
F + E + Row

	F	Row
Permit	2 4 6	0
Red Lock		1
Yellow Lock	2 4 6	2
Min Recall	2 6	3
Ped Recall		4
Peds (View)		5
Rest In Walk		6
Red Rest		7
Dbl Entry	2 6	8
Max Recall		9
Soft Recall		A
Max 2		B
Cond Serv		C
Ped Lock	12345678	D
Yellow Start	2 6	E
1st Phases	4	F

Phase Functions <F Page>
F + F + Row

Max Initial	32	F + 0 + E
Red Revert	5.0	F + 0 + F
All Red Start	0.0	F + C + O

Start / Revert Times

Drop Number	12	C + 0 + 0
Zone Number	12	C + 0 + 1
Area Number	5	C + 0 + 2
Area Address	103	C + 0 + 3
QuicNet Channel	COM52:	(QuicNet)

Communication Addresses

C + F + O	F	Row
Free Lag	2 4 6	0
	Lag Phases	<C Page>

Overlap Timing

	Row	9 Green Clear	C Yellow Change	D Red Clear	0 Load-Switch #
Overlap A	A				
Overlap B	B				
Overlap C	C				
Overlap D	D				

<F Page>
F + COLOR +

<D Page>
D + 0 + OVERLAP

Manual Plan	0	C + A + 1
Manual Offset	0	C + B + 1

Manual Selection

Manual Plan
0 = Automatic
1-9 = Plan 1-9
14 = Free
15 = Flash

Manual Offset
0 = Automatic
1 = Offset A
2 = Offset B
3 = Offset C

Downtime Flash	255	(minutes)

Downtime Before Auto Manual Flash
F + 0 +8

Disable Ports	234

Disable Communication Ports
D + D + 9

Timing Sheet By: LEM
Approved By: FLG
Drawing Number: 22121-5-D
Timing Implemented On: 4/21/10

5

INTERSECTION: Morena Bl & W. Morena Bl (south)

223 Program

Row	Time	Function	Day of Week	Column F Phases/Bits
0	00 : 01	E	1234567	1
1				
2				
3				
4				
5				
6				
7				
8				
9				
A				
B				
C				
D				
E				
F				

TOD Function

7 + ROW

<D Page>

D + F + ROW

T.O.D. Functions
0 = Permitted Phases
1 = Red Lock
2 = Yellow Lock
3 = Veh Min Recall
4 = Ped Recall
5 =
6 = Rest In Walk
7 = Red Rest
8 = Double Entry
9 = Veh Max Recall
A = Veh Soft Recall
B = Maximum 2
C = Conditional Service
D = Free Lag Phases
E = Bit 1 - Local Override
Bit 2 - Phase Bank 2
Bit 3 - Phase Bank 3
Bit 4 - Disable Detector OFF Monitor
Bit 7 - Detector Count Monitor
Bit 8 - Real Time Split Monitor
F = Output Bits 1 thru 4

Row		F
0		
1	RR Overlap A - Phases	
2	RR Overlap B - Phases	
3	RR Overlap C - Phases	
4	RR Overlap D - Phases	
5	Ped 2P	
6	Ped 6P	
7	Ped 4P	
8	Ped 8P	
9	Yellow Flash Phases	
A	Overlap A - Phases	
B	Overlap B - Phases	
C	Overlap C - Phases	
D	Overlap D - Phases	
E	Restricted Phases	
F	Assign 5 Outputs	

Configuration

<E Page>

E + F + ROW

Day of Week

1 = Sunday
2 = Monday
3 = Tuesday
4 = Wednesday
5 = Thursday
6 = Friday
7 = Saturday

Row		E
0	Exclusive Phases	
1	RR-1 Clear Phases	
2	RR-2 Clear Phases	
3	RR-2 Limited Service	
4	Prot / Perm Phases	
5	Overlap A - Green Omit	
6	Overlap B - Green Omit	
7	Overlap C - Green Omit	
8	Overlap D - Green Omit	
9	Overlap Yellow Flash	
A	EV-A Phases	2 6
B	EV-B Phases	
C	EV-C Phases	4
D	EV-D Phases	
E	Extra 1 Config. Bits	1 345
F	IC Select (Interconnect)	2

Configuration

For access, set F + 9 + E = 1

E + E + ROW

Extra 1 Flags
1 = TBC Type 1
2 = NEMA Ext. Coord
3 = Auto Daylight Savings
4 = EV Advance
5 = Remote Download
6 = Special Event
7 = Pretimed Operation
8 = Split Ring Operation

IC Select Flags
1 =
2 = Modem
3 = 7-Wire Slave
4 = Flash / Free
5 =
6 = Simplex Master
7 = 7-Wire Master
8 = Offset Interrupter

Assign 5 Outputs
1 = Right Turn Overlap
2 = TOD Outputs
3 = EV Beacon - Steady
4 = EV Beacon - Flashing
5 = Special Event Outputs
6 = Phase 3 & 7 Ped
7 = Advanced Warning Sign
8 =

Time and Date

8-0 Hour, Minute, Day-of-Week
8-1 Day-of-Month, Year, Month
8-F Seconds

Disable Parity	0	D+B+0

Dial-Up Telephone Communications

(If set to a non-zero value, parity will be disabled)

Program Information

C + C + 0 = program
C + C + F = version

Remote Download

C + 0 + 4 = 1 -255
w/ E + E + E bit 5 on

INTERSECTION: Morena Bl & W. Morena Bl (so

223 Program

Row	1 Delay	3 Carry-over
0		
1		
2		
3		
4		
5		
6		
7		
8		
9		
A		
B		
C		
D		
E	---	---
F	---	---

Detector Name	332 Input File	Detector Number
	1I1	14
	2I2U	1
	2I2L	5
	2I3U	21
	2I3L	25
	2I4	9
	3I5	16
	4I6U	3
	4I6L	7
	4I7U	23
	4I7L	27
	4I8	11
	1I9U	18
	3I9L	20
---	---	---
---	---	---

Row	2 Delay	4 Carry-over
0		
1		
2		
3		
4		
5		
6		
7		
8		
9		
A		
B		
C		
D		
E	---	---
F	---	---

Detector Name	332 Input File	Detector Number
	5J1	13
	6J2U	2
	6J2L	6
	6J3U	22
	6J3L	26
	6J4	10
	7J5	15
	8J6U	4
	8J6L	8
	8J7U	24
	8J7L	28
	8J8	12
	5J9U	17
	7J9L	19
---	---	---
---	---	---

Detector Delay & Carryover <D Page>

D + X (across) + ROW

Row	Detector Numbers	E
A	1 2 3 4 5 6 7 8	12345678
B	9 10 11 12 -- -- -- --	1234__
C	13 14 15 16 17 18 19 20	12345678
D	-- -- -- -- 21 22 23 24	__5678
E	-- -- -- -- -- -- -- --	1234__
F	-- 25 26 27 28 -- -- --	_2345__

Active Detectors <D Page>

Row		0 Detector #
0		
1	System Det. # 1	0
2	System Det. # 2	0
3	System Det. # 3	0
4	System Det. # 4	0
5	System Det. # 5	0
6	System Det. # 6	0
7	System Det. # 7	0
8	System Det. # 8	0

System Detectors <D Page>

Max ON (min)	5	D+A+E
Max OFF (min)	60	D+A+F

Detector Failure Monitor

Phase Number	0	F+C+1
Time Before Yellow	0.0	F+C+3

Advance Warning Beacon - Sign 1

Phase Number	0	F+D+1
Time Before Yellow	0.0	F+D+3

Advance Warning Beacon - Sign 2

Long Failure	0.5	F+0+6
Short Failure	0.5	F+0+7

Power Cycle Correction (Default = 0.5)

INTERSECTION: Morena Bl & W. Morena Bl (south)

223 Program

Coordination Timing By: [illegible]G
Implemented On: 10/27/2009

Row	Column # ---->	Plan 1	2	3	4	5	6	7	8	9
	Plan Name ---->		Mid & Weekend			AM	PM			
0	Cycle Length		48			55	68			
1	Phase 1 - ForceOff									
2	Phase 2 - ForceOff		0			0	0			
3	Phase 3 - ForceOff									
4	Phase 4 - ForceOff		22			22	23			
5	Phase 5 - ForceOff									
6	Phase 6 - ForceOff		0			0	0			
7	Phase 7 - ForceOff									
8	Phase 8 - ForceOff									
9	Ring Offset									
A	Offset A		28			41	1			
B	Offset B									
C	Offset C									
D	Permissive		5			6	7			
E	Hold Release		255			255	255			
F	Ped Shift		0			0	0			

Coordination <C Page>

C + Plan + ROW

FOR OBSERVATION ONLY

Master Plan	C + A + 2
Current Plan	C + A + 3
Next Plan	C + A + 4
T.O.D. Plan	C + A + 5
Master Cycle	C + A + 0
Ring A Cycle	C + B + 0
Ring B Cycle	C + D + 0
Min Cycle	C + A + E
Max Cycle	C + B + E

Row	Time	Plan	Offset	Day of Week
0	06 : 30	5	A	_23456_
1	09 : 00	2	A	1_____7
2	10 : 30	2	A	_23456_
3	13 : 30	6	A	_23456_
4	18 : 00	2	A	_23456_
5	19 : 00	E	A	1_____7
6	20 : 00	E	A	1234567
7				
8				
9				
A				
B				
C				
D				
E				
F				

TOD Coordination

<9 Key with C+0+9=1>

	E
Plan 1	
Plan 2	_2__6__
Plan 3	
Plan 4	
Plan 5	_2__6__
Plan 6	_2__6__
Plan 7	
Plan 8	
Plan 9	
Coord Ped*	
NEMA Hold	

Sync Phases

C + E + FUNCTION #

Row		F
0	Free Lag	_2_4_6__
1	Plan 1 - Lag	
2	Plan 2 - Lag	_2_4_6__
3	Plan 3 - Lag	
4	Plan 4 - Lag	
5	Plan 5 - Lag	_2_4_6__
6	Plan 6 - Lag	_2_4_6__
7	Plan 7 - Lag	
8	Plan 8 - Lag	
9	Plan 9 - Lag	
A	Coord Max *	
B	Coord Lag *	
C		
D		
E		
F		

Lag Phases <C Page>

C + F + FUNCTION #

Transition Type	0

TBC Transition
C + D + D

Plan Select
1 thru 9 = Coordination Plan 1 thru 9
14 or E = Free
15 or F = Flash

Transition Type
0 = Shortway
Non-zero = Lengthen

LOCATION: **RTE 5 NB / SEA WORLD DRIVE**

CALTRANS C8 Version 3 DATE: 8/4/2010

F PAGE

	INTERVAL	PHASE TIMING 1	2	3	4	5	6	7	8	9
0	WALK	1	7	1	1	19	7	1	1	CLK RST
1	DONT WALK	1	11	1	1	1	16	1	1	
2	MIN GREEN	1	10	1	5	5	14	1	5	
3	TYPE 3 DET	0	0	0	0	0	0	0	0	
4	ADD/VEH	0.0	0.0	0.0	0.0	0.0	0.0	0.0	0.0	
5	PASSAGE	0.9	2.0	0.9	1.0	2.0	2.0	0.9	1.0	
6	MAX GAP	0.9	2.0	0.9	1.0	3.0	2.0	0.9	1.0	
7	MIN GAP	0.9	2.0	0.9	1.0	1.0	2.0	0.9	1.0	
8	MAX EXT	9	30	9	25	30	30	9	15	
9	MAX 2									YR
A	MAX 3				40					MO
B										DAY
C	REDUCE BY	0.0	0.0	0.0	0.0	0.0	0.0	0.0	0.0	DOW
D	EVERY	1.0	1.0	1.0	1.0	1.0	1.0	1.0	1.0	HR
E	YELLOW	3.0	4.0	3.0	3.6	3.2	4.0	3.0	3.5	MIN
F	RED	1.0	1.5	1.0	1.0	1.0	1.5	1.0	1.0	SEC
	PED XING FT		40				55			
	BIKE XING FT		50				106			

PRE-EMPTION E	
EV SEL	0
RR1 CLR	5
EVA DLY	0
EVA CLR	5
EVB DLY	0
EVB CLR	5
EVC DLY	0
EVC CLR	5
EVD DLY	0
EVD CLR	5
MAX EV	255
RR2 CLR	5

F FLAGS	1	2	3	4	5	6	7	8	
PERMIT	1	2	3	4	5	6	7	8	0
RED LOCK				4	5				1
YEL LOCK									2
V RECALL		2				6			3
P RECALL									4
PED PHASES		2			5	6			5
RT OLA									6
RT OLB									7
DBL ENTRY				4				8	8
MAX 2 PHASES									9
LAG PHASES	READ ONLY								A
RED REST									B
REST-IN-WALK									C
MAX 3 PHASES				4					D
YEL START UP		2				6			E
FIRST PHASE				4					F
	1	2	3	4	5	6	7	8	

FOC LONG FAILURE	
FOD SHORT FAILURE	
FOE	0
FOF	5

FCO	3
FC1	3
FC2	10
FCA	0.0
FCB	0.0
FCC	0.0
FCD	0.0

FDO TB SELECT	1
FD3 PED SELECT	0
FD4 7 WIRE	0
FD5 PERMISSIVE	0
FD8 OS SEEKING	1

CO5 FLASH TYPE	1
CC2 DOWNLOAD	1

ENTRIES IN THESE LOCATIONS ARE NOT TO BE CHANGED

ENTRIES IN THESE LOCATIONS CAN BE CHANGED IN CC1 FLASH ONLY

LOCATION: **RTE 5 NB / SEA WORLD DRIVE**

CALTRANS C8 Version 3 DATE: 8/5/2003

C PAGE

		CONTROL PLANS									Y-COORD			LAG PHASE		FLAGS									
		1	2	3	4	5	6	7	8	9		C	D	E		F	1	2	3	4	5	6	7	8	
0	CYCLE LENGTH	60	75	100	100	100	100									LAG FZ FREE		2		4		6		8	0
1	FZ1 GRN FCTR	0	0	0	0	0	0							GAPOUT CP1	1	LAG FZ CP 1		2		4	5			8	1
2														GAPOUT CP2	1	LAG FZ CP 2		2		4	5			8	2
3	FZ3 GRN FCTR	0	0	0	0	0	0							GAPOUT CP3	1	LAG FZ CP 3		2		4	5			8	3
4	FZ4 GRN FCTR	10	15	20	30	25	35				PERM TIME			GAPOUT CP4	0	LAG FZ CP 4		2		4	5			8	4
5	FZ5 GRN FCTR	20	25	35	30	40	25				LAG OFFSET			GAPOUT CP5		LAG FZ CP 5		2		4	5			8	5
6											FORCE OFF			GAPOUT CP6		LAG FZ CP 6		2		4	5			8	6
7	FZ7 GRN FCTR	0	0	0	0	0	0				LONG GRN			GAPOUT CP7		LAG FZ CP 7									7
8	FZ8 GRN FCTR	10	15	15	15	15	15				NO GREEN			GAPOUT CP8		LAG FZ CP 8									8
9	MULTI CYCLE	0	0	0	0	0	0							GAPOUT CP9		LAG FZ CP 9									9
A	OFFSET A	50	60	70	70	70	70				OFFSET					LAG C COORD									A
B	OFFSET B															LAG D COORD									B
C	OFFSET C															COORD FAZES		2				6			C
D	FZ 3 EXT																								D
E	FZ 7 EXT																								E
F	OFFSET INTRPT																								F
																	1	2	3	4	5	6	7	8	

CO1 MANUAL CP
CO2 MASTER CP
CO3 CURRENT CP
CO4 LAST CP
CO7 TRNSMT CP
COD MANUAL OFFSET
CAO LOCAL CYCLE TIMER
CBO MASTER CYCLE TIMER
CAA LOCAL OFFSET
CBA MASTER OFFSET

SYSTEM MASTER:
RT5 NB RAMP

FEATURE	OFF	ON
1		
2		
3		
4		
5		
6		
7		
8		

LOCATION	OFF	ON
1		
2		1
3		
4		
5		
6		
7		
8		

COO = 2

CCB/CDB OFFSET TIMER
CCC/CDC LAG GREEN TIMER
CCD/CDD FORCE OFF TIMER
CCE/CDE LONG GREEN TIMER
CCF/CDF NO GREEN TIMER

LOCATION: RTE 5 NB / SEA WORLD DRIVE .

CALTRANS C8 Version 3

DATE: 8/5/2003

D PAGE

	D	FLAGS								E	FLAGS								F	FLAGS							
	MAX	1	2	3	4	5	6	7	8	MIN	1	2	3	4	5	6	7	8	PED	1	2	3	4	5	6	7	8
0	RCL									RCL									RCL								
1	CP 1									CP 1				4	5				CP 1					5			
2	CP 2									CP 2				4	5				CP 2					5			
3	CP 3									CP 3				4	5				CP 3								
4	CP 4					5				CP 4				4					CP 4								
5	CP 5					5				CP 5									CP 5								
6	CP 6									CP 6				4					CP 6					5			
7	CP 7									CP 7									CP 7								
8	CP 8									CP 8									CP 8								
9	CP 9									CP 9									CP 9								
A																			RCL 1								
B																			RCL 2								
C																											
D																											
E																											
F																											
		1	2	3	4	5	6	7	8		1	2	3	4	5	6	7	8		1	2	3	4	5	6	7	8

E PAGE

	E	FLAGS								F	FLAGS								
	FUNCTION	1	2	3	4	5	6	7	8	FUNCTION	1	2	3	4	5	6	7	8	
0										CODE 4									0
1										CODE 5									1
2										C-RECALL									2
3										D-RECALL									3
4										EXCLUSIVE									4
5										2 PED		2							5
6										6 PED					6				6
7										4 PED				4					7
8										8 PED					5				8
9																			9
A	OLA NOT									OLA ON									A
B	OLB NOT									OLB ON									B
C	OLC NOT									OLC ON									C
D	OLD NOT									OLD ON									D
E																			E
F																			F
		1	2	3	4	5	6	7	8		1	2	3	4	5	6	7	8	

LAST POWER FAILURE REGISTER

HOUR = D-A-E

MINUTE = D-B-E

DAY = D-C-E

RCL 1 = TIME OF DAY MAX RECALL (1ST SELECT) PHASES
(CALL ACTIVE LIGHTS)

RCL 2 = TIME OF DAY MAX RECALL (2ND SELECT) PHASES
(CALL ACTIVE LIGHTS)

LAST FLASH TIME REGISTER

HOUR = D-A-F

MINUTE = D-B-F

DAY = D-C-F

D-E-E = C8 VERSION NUMBER

D-E-F = LITHIUM BATTERY CONDITION

84 = BAD

85 = GOOD

LOCATION: **RTE 5 NB / SEA WORLD DRIVE**

CALTRANS C8 Version 3 DATE: 8/5/2003

7 PAGE

TIME OF DAY ACTIVITY TABLE											
7+EVENT+HR+MIN+ACT+"E"+ON/OFF+DOW LTS											
				ON/	S	M	T	W	T	F	S
	HR	MIN	ACT	OFF	1	2	3	4	5	6	7
0	06	00	3	X	1	2	3	4	5	6	7
1	19	00	3		1	2	3	4	5	6	7
2											
3											
4											
5											
6											
7											
8											
9											
A											
B											
C											
D											
E											
F											

9 PAGE C09 = 0 or 1

CONTROL PLAN TIME OF DAY											
9+EVENT+HR+MIN+CP+OS+E+DOW											
					S	M	T	W	T	F	S
	HR	MIN	CP	OS	1	2	3	4	5	6	7
0	06	00	1	A		2	3	4	5	6	
1	07	00	2	A		2	3	4	5	6	
2	07	30	3	A		2	3	4	5	6	
3	08	00	2	A		2	3	4	5	6	
4	09	30	6	A		2	3	4	5	6	
5	15	30	4	A		2	3	4	5	6	
6	18	00	2	A		2	3	4	5	6	
7	18	30	E			2	3	4	5	6	
8	15	00	5		1						7
9	19	00	E		1						7
A											
B											
C											
D											
E											
F											

9 PAGE CO9 = 2

CONTROL PLAN TIME OF DAY											
9+EVENT+HR+MIN+CP+OS+E+DOW											
					S	M	T	W	T	F	S
	HR	MIN	CP	OS	1	2	3	4	5	6	7
0											
1											
2											
3											
4											
5											
6											
7											
8											
9											
A											
B											
C											
D											
E											
F											

ACTIVITY CODE

1 TYPE OF MAX TERMINATION
2 MAX 2
3 MAX 3
4 COND SERV (1ST SELECT)
5 COND SERV (2ND SELECT)
6 ENERGIZE AUX OUTPUT-RED

7 ENERGIZE AUX OUTPUT-GREEN

8 ENERGIZE AUX OUTPUT-YELLOW

9 TIME OF DAY MAX RECALL (1ST SELECT)
A TRAFFIC ACT. MAX 2 OPERATION
B TIME OF DAY MAX RECALL (2ND SELECT)
C YELLOW YIELD COORDINATION
D YELLOW YIELD COORDINATION
E TIME OF DAY FREE OPERATION
F FLASHING OPERATION

DIST	COUNTY	ROUTE	POST MILES TOTAL PROJECT	SHEET NO.	TOTAL SHEETS
11	SD	5	R20.3/R30.0	114	137

REGISTERED CIVIL ENGINEER

3-15-93
PLANS APPROVAL DATE

REGISTERED PROFESSIONAL ENGINEER F G CASTRO No. 34421 Exp. 9-30-94 CIVIL STATE OF CALIFORNIA

JHK & ASSOCIATES
8989 RIO SAN DIEGO DR.
SUITE 335
SAN DIEGO, CA 92108

CONDUIT NOTES (THIS SHEET ONLY)

1. 1½" C. 2 DLC.
2. EX 1½" C. 3 #4, 2#14. ADD 1 SIC (SIG).
3. EX. 1" C. RS 2 mlc. ADD 2 DLC.
4. EX. 2" C. RS ALL EX. CONDUCTORS SERVING 5. ADD 3-9/14 CABLE, 8 DLC, 3#4(SERVICE), 1 SIC(SIG), 2 #14.
5. EX. 2" C. RS ALL EX. CONDUCTORS SERVING 6. ADD 2-9/14 CABLE, 8 DLC, 3#4(SERVICE), 1 SIC(SIG), 2 #14.
6. EX. 2" C. RS ALL EX. CONDUCTORS SERVING 7. ADD 1-9/14 CABLE, 8 DLC, 3#4(SERVICE), 1 SIC(SIG), 2 #14.
7. EX. 1½" C. RS 2 mlc. ADD 4 DLC.
8. EX. 1" C IN BRIDGE RAIL. ADD 1 SIC(SIG).
9. EX. 1½" C. RS 2 mlc. ADD 2 DLC.

CONDUIT NOTES (THIS SHEET ONLY-CONTINUED)

10. EX. 1½" C. 2 #10, 10 #14. ADD 2 DLC. RS 2 mlc.
11. EX. 1½" C. 2 #10, 1 #12, 1 SIC(TEL). ADD 2 DLC.
12. EX. 1½" C. RS ALL EX. CONDUCTORS. ADD 1-9/14 CABLE, 4 DLC, 1 SIC(SIG).
13. EX. 2-2½" C. 32#14, 1#10, 2#8(SERVICE), 8 MLC. RS ALL EX. CONDUCTORS SERVING 4. ADD 3-9/14 CABLE, 2#8(SERVICE), 14 DLC, 1 SIC(SIG), 1 SIC(RM).
14. EX. 1½" C. MT. ADD 2 DLC.
15. EX. 1½" C. RS 2 mlc. ADD 4 DLC.
16. EX. 1½" CONDUIT. ADD 4 DLC
18. EX. 1½" C IN BRIDGE RAIL WITH 1 SIC (TEL).
19. EX. 1½", 13 #14, 2 #10(S). ADD 2 DLC.
20. EX 1½"C. 13 #14, 2 #10(S). ADD 2 DLC, 1 SIC(RM).

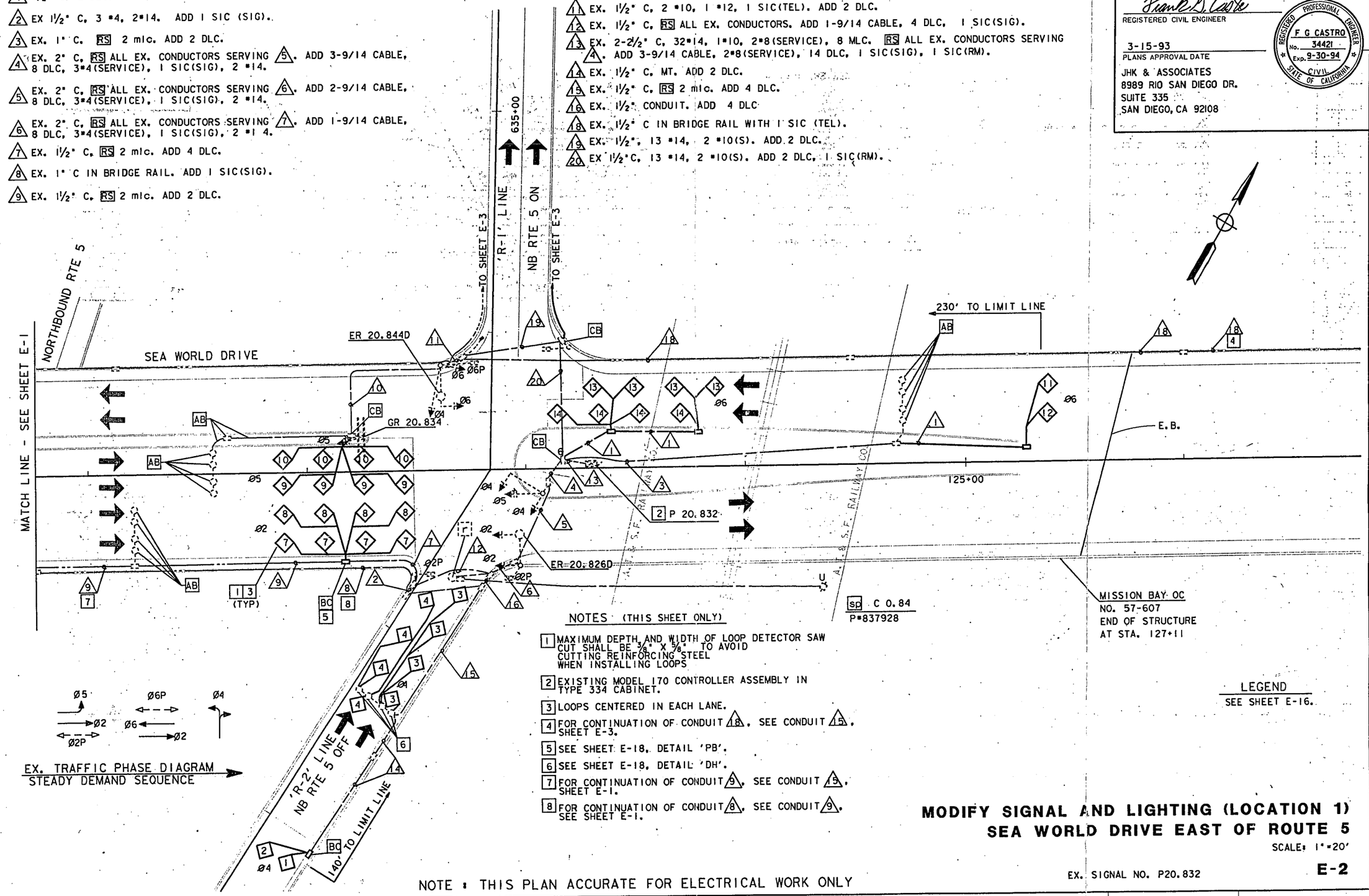

NOTES (THIS SHEET ONLY)

1. MAXIMUM DEPTH AND WIDTH OF LOOP DETECTOR SAW CUT SHALL BE ⅜" X ⅝" TO AVOID CUTTING REINFORCING STEEL WHEN INSTALLING LOOPS
2. EXISTING MODEL 170 CONTROLLER ASSEMBLY IN TYPE 334 CABINET.
3. LOOPS CENTERED IN EACH LANE.
4. FOR CONTINUATION OF CONDUIT 18, SEE CONDUIT 15, SHEET E-3.
5. SEE SHEET E-18, DETAIL 'PB'.
6. SEE SHEET E-18, DETAIL 'DH'.
7. FOR CONTINUATION OF CONDUIT 9, SEE CONDUIT 5, SHEET E-1.
8. FOR CONTINUATION OF CONDUIT 8, SEE CONDUIT 9, SEE SHEET E-1.

LEGEND
SEE SHEET E-16.

NOTE : THIS PLAN ACCURATE FOR ELECTRICAL WORK ONLY

MODIFY SIGNAL AND LIGHTING (LOCATION 1) SEA WORLD DRIVE EAST OF ROUTE 5

SCALE: 1"=20'

EX. SIGNAL NO. P20.832

E-2

CU	11205	EA	085971

FOR REDUCED PLANS ORIGINAL SCALE IS IN INCHES 0 1 2 3

STATE OF CALIFORNIA - DEPARTMENT OF TRANSPORTATION
Caltrans TRAFFIC ELECTRICAL

DESIGN OVERSIGHT JESSIE CABUGAO

CALCULATED/DESIGNED BY BCS DATE 2/93 REVISED BY
CHECKED BY FGC 2/93 DATE REVISED

LAST REVISION 02-18-93

FORM OC-OE-9C-PF (REV. 3/88)

LOCATION: **RTE 5 SB / SEA WORLD DRIVE**

CALTRANS C8 Version 3 DATE: 8/4/2010

F PAGE

	INTERVAL	PHASE TIMING 1	2	3	4	5	6	7	8	9
0	WALK	1	7	7	1	1	1	1	1	CLK RST
1	DONT WALK	1	14	11	1	1	1	1	1	
2	MIN GREEN	5	14	5	5	1	13	1	1	
3	TYPE 3 DET	0	0	0	0	0	0	0	0	
4	ADD/VEH	0.0	0.0	0.0	0.0	0.0	0.0	0.0	0.0	
5	PASSAGE	2.0	2.0	0.9	1.0	0.9	2.0	0.9	0.9	
6	MAX GAP	3.0	2.0	0.9	1.0	0.9	2.0	0.9	0.9	
7	MIN GAP	1.0	2.0	0.9	1.0	0.9	2.0	0.9	0.9	
8	MAX EXT	30	30	20	30	9	30	9	9	
9	MAX 2									YR
A	MAX 3									MO
B										DAY
C	REDUCE BY	0.0	0.0	0.0	0.0	0.0	0.0	0.0	0.0	DOW
D	EVERY	1.0	1.0	1.0	1.0	1.0	1.0	1.0	1.0	HR
E	YELLOW	3.2	4.0	3.0	3.6	3.0	4.0	3.0	3.0	MIN
F	RED	1.0	1.0	1.0	1.0	1.0	1.0	1.0	1.0	SEC
	PED XING FT		49	38						
	BIKE XING FT		101				90			

NOTES:

PRE-EMPTION E	
EV SEL	0
RR1 CLR	5
EVA DLY	0
EVA CLR	5
EVB DLY	0
EVB CLR	5
EVC DLY	0
EVC CLR	5
EVD DLY	0
EVD CLR	5
MAX EV	255
RR2 CLR	5

F FLAGS	1	2	3	4	5	6	7	8	
PERMIT	1	2	3	4	5	6	7	8	0
RED LOCK	1			4					1
YEL LOCK									2
V RECALL		2				6			3
P RECALL									4
PED PHASES		2	3						5
RT OLA									6
RT OLB									7
DBL ENTRY									8
MAX 2 PHASES									9
LAG PHASES	READ ONLY								A
RED REST									B
REST-IN-WALK									C
MAX 3 PHASES									D
YEL START UP		2				6			E
FIRST PHASE				4					F
	1	2	3	4	5	6	7	8	

FOC LONG FAILURE	
FOD SHORT FAILURE	
FOE	0
FOF	5

FCO	3
FC1	3
FC2	10
FCA	0.0
FCB	0.0
FCC	0.0
FCD	0.0

FDO TB SELECT	1
FD3 PED SELECT	0
FD4 7 WIRE	0
FD5 PERMISSIVE	0
FD8 OS SEEKING	1

CO5 FLASH TYPE	1
CC2 DOWNLOAD	1

ENTRIES IN THESE LOCATIONS CAN BE CHANGED IN CC1 FLASH ONLY

LOCATION: **RTE 5 SB / SEA WORLD DRIVE**

CALTRANS C8 Version 3 DATE: 9/28/2004

C PAGE

		CONTROL PLANS									Y-COORD			LAG PHASE		FLAGS									
		1	2	3	4	5	6	7	8	9		C	D	E		F	1	2	3	4	5	6	7	8	
0	CYCLE LENGTH	60	75	100	100	100	100									LAG FZ FREE		2		4		6		8	0
1	FZ1 GRN FCTR	10	15	15	15	15	20							GAPOUT CP1		LAG FZ CP 1	1		3			6		8	1
2														GAPOUT CP2		LAG FZ CP 2	1		3			6		8	2
3	FZ3 GRN FCTR	14	14	14	14	14	14							GAPOUT CP3		LAG FZ CP 3	1		3			6		8	3
4	FZ4 GRN FCTR	15	20	30	30	25	25				PERM TIME			GAPOUT CP4		LAG FZ CP 4	1		3			6		8	4
5	FZ5 GRN FCTR	0	0	0	0	0	0				LAG OFFSET			GAPOUT CP5		LAG FZ CP 5	1		3			6		8	5
6											FORCE OFF			GAPOUT CP6		LAG FZ CP 6	1		3			6		8	6
7	FZ7 GRN FCTR	0	0	0	0	0	0				LONG GRN			GAPOUT CP7		LAG FZ CP 7									7
8	FZ8 GRN FCTR	0	0	0	0	0	0				NO GREEN			GAPOUT CP8		LAG FZ CP 8									8
9	MULTI CYCLE	0	0	0	0	0	0							GAPOUT CP9		LAG FZ CP 9									9
A	OFFSET A	0	0	0	0	0	0				OFFSET					LAG C COORD									A
B	OFFSET B															LAG D COORD									B
C	OFFSET C															COORD FAZES		2				6			C
D	FZ 3 EXT																								D
E	FZ 7 EXT																								E
F	OFFSET INTRPT																								F
																	1	2	3	4	5	6	7	8	

CO1 MANUAL CP
CO2 MASTER CP
CO3 CURRENT CP
CO4 LAST CP
CO7 TRNSMT CP
COD MANUAL OFFSET
CAO LOCAL CYCLE TIMER
CBO MASTER CYCLE TIMER
CAA LOCAL OFFSET
CBA MASTER OFFSET

SYSTEM MASTER:
RTE 5 NB RAMP

FEATURE	OFF	ON
1		
2		
3		
4		
5		
6		
7		
8		

LOCATION	OFF	ON
1		1
2		
3		
4		
5		
6		
7		
8		

COO = 1

CCB/CDB OFFSET TIMER
CCC/CDC LAG GREEN TIMER
CCD/CDD FORCE OFF TIMER
CCE/CDE LONG GREEN TIMER
CCF/CDF NO GREEN TIMER

LOCATION: **RTE 5 SB / SEA WORLD DRIVE**

CALTRANS C8 Version 3 DATE: 8/5/2003

D PAGE

	D	FLAGS								E	FLAGS								F	FLAGS							
	MAX	1	2	3	4	5	6	7	8	MIN	1	2	3	4	5	6	7	8	PED	1	2	3	4	5	6	7	8
0	RCL									RCL									RCL								
1	CP 1									CP 1	1			4					CP 1								
2	CP 2									CP 2	1			4					CP 2								
3	CP 3									CP 3	1			4					CP 3								
4	CP 4									CP 4	1			4					CP 4								
5	CP 5									CP 5	1			4					CP 5								
6	CP 6									CP 6	1			4					CP 6								
7	CP 7									CP 7									CP 7								
8	CP 8									CP 8									CP 8								
9	CP 9									CP 9									CP 9								
A																			RCL 1								
B																			RCL 2								
C																											
D																											
E																											
F																											
		1	2	3	4	5	6	7	8		1	2	3	4	5	6	7	8		1	2	3	4	5	6	7	8

E PAGE

	E	FLAGS								F	FLAGS								
	FUNCTION	1	2	3	4	5	6	7	8	FUNCTION	1	2	3	4	5	6	7	8	
0										CODE 4									0
1										CODE 5									1
2										C-RECALL									2
3										D-RECALL									3
4										EXCLUSIVE									4
5										2 PED		2							5
6										6 PED			3						6
7										4 PED				4					7
8										8 PED								8	8
9																			9
A	OLA NOT			3						OLA ON	1	2		4		6			A
B	OLB NOT				4					OLB ON	1	2	3			6			B
C	OLC NOT	1			4					OLC ON		2	3			6			C
D	OLD NOT									OLD ON									D
E																			E
F																			F
		1	2	3	4	5	6	7	8		1	2	3	4	5	6	7	8	

LAST POWER FAILURE REGISTER

HOUR = D-A-E

MINUTE = D-B-E

DAY = D-C-E

RCL 1 = TIME OF DAY MAX RECALL (1ST SELECT) PHASES
(CALL ACTIVE LIGHTS)

RCL 2 = TIME OF DAY MAX RECALL (2ND SELECT) PHASES
(CALL ACTIVE LIGHTS)

LAST FLASH TIME REGISTER

HOUR = D-A-F

MINUTE = D-B-F

DAY = D-C-F

D-E-E = C8 VERSION NUMBER

D-E-F = LITHIUM BATTERY CONDITION

84 = BAD

85 = GOOD

LOCATION: **RTE 5 SB / SEA WORLD DRIVE**

CALTRANS C8 Version 3 DATE: 8/5/2003

7 PAGE

TIME OF DAY ACTIVITY TABLE										
7+EVENT+HR+MIN+ACT+"E"+ON/OFF+DOW LTS										
				ON/	S	M	T	W	T	F	S
	HR	MIN	ACT	OFF	1	2	3	4	5	6	7
0											
1											
2											
3											
4											
5											
6											
7											
8											
9											
A											
B											
C											
D											
E											
F											

9 PAGE C09 = 0 or 1

CONTROL PLAN TIME OF DAY											
9+EVENT+HR+MIN+CP+OS+E+DOW											
					S	M	T	W	T	F	S
	HR	MIN	CP	OS	1	2	3	4	5	6	7
0	06	00	1	A		2	3	4	5	6	
1	07	00	2	A		2	3	4	5	6	
2	07	30	3	A		2	3	4	5	6	
3	08	00	2	A		2	3	4	5	6	
4	09	30	6	A		2	3	4	5	6	
5	15	30	4	A		2	3	4	5	6	
6	18	00	2	A		2	3	4	5	6	
7	18	30	E			2	3	4	5	6	
8	15	00	5	A	1						7
9	19	00	E		1						7
A											
B											
C											
D											
E											
F											

9 PAGE CO9 = 2

CONTROL PLAN TIME OF DAY											
9+EVENT+HR+MIN+CP+OS+E+DOW											
					S	M	T	W	T	F	S
	HR	MIN	CP	OS	1	2	3	4	5	6	7
0											
1											
2											
3											
4											
5											
6											
7											
8											
9											
A											
B											
C											
D											
E											
F											

ACTIVITY CODE

1 TYPE OF MAX TERMINATION
2 MAX 2
3 MAX 3
4 COND SERV (1ST SELECT)
5 COND SERV (2ND SELECT)
6 ENERGIZE AUX OUTPUT-RED

7 ENERGIZE AUX OUTPUT-GREEN

8 ENERGIZE AUX OUTPUT-YELLOW

9 TIME OF DAY MAX RECALL (1ST SELECT)
A TRAFFIC ACT. MAX 2 OPERATION
B TIME OF DAY MAX RECALL (2ND SELECT)
C YELLOW YIELD COORDINATION
D YELLOW YIELD COORDINATION
E TIME OF DAY FREE OPERATION
F FLASHING OPERATION

DIST	COUNTY	ROUTE	POST MILES TOTAL PROJECT	SHEET NO.	TOTAL SHEETS
11	SD	5	R20.3/R30.0	113	137

Frank G. Castro
REGISTERED CIVIL ENGINEER

3-15-93
PLANS APPROVAL DATE

JHK & ASSOCIATES
8989 RIO SAN DIEGO DR.
SUITE 335
SAN DIEGO, CA 92108

REGISTERED PROFESSIONAL ENGINEER F G CASTRO No. 34421 Exp. 9-30-94 CIVIL STATE OF CALIFORNIA

CONDUIT NOTES (THIS SHEET ONLY)

1. 1½" C, 2 DLC
2. 1½" C, 5 ~~4~~ DLC
3. 1½" C, 5 ~~4~~ DLC
4. 2" C, 5 ~~4~~ DLC, 2-3/14 CABLE
5. 2" C, 10 DLC
6. 1½" C, 2 DLC
7. 2" C, 8 DLC
8. 1½" C, 1 SIC(SIG)
9. EX. 1" C IN BRIDGE RAIL. ADD 1 SIC(SIG)
10. EX. 1" CONDUIT. RC mlc ADD 2 DLC
11. 1½" C, 2 DLC
12. 2" C, 6 DLC
13. 1½" C, 4 DLC
14. EX. 1½" C, 2#10(FB), 2 #8(S) ADD 2 DLC.
15. EX. 1½"C, RS ALL EX. CONDUCTORS. ADD 2 DLC.
16. 1½"C, 1 SIC (SIG), 1 SIC (RM)
17. 1½" C, 1 SIC (RM)
18. 2½" C, 2-3/14 CABLE, 15 ~~14~~ DLC

LEGEND

SEE SHEET E-16.

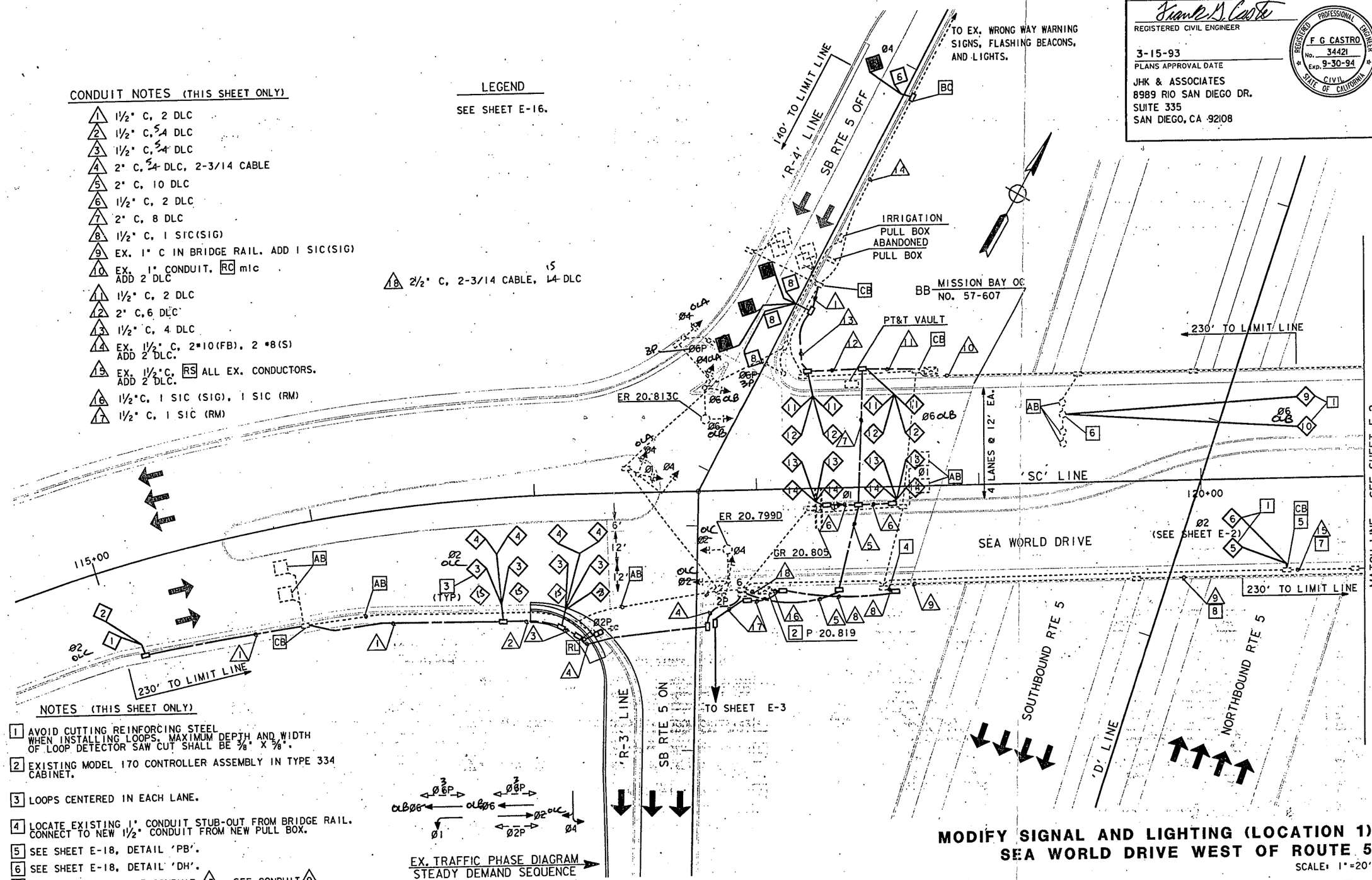

NOTES (THIS SHEET ONLY)

1. AVOID CUTTING REINFORCING STEEL WHEN INSTALLING LOOPS. MAXIMUM DEPTH AND WIDTH OF LOOP DETECTOR SAW CUT SHALL BE ⅜" X ⅝".
2. EXISTING MODEL 170 CONTROLLER ASSEMBLY IN TYPE 334 CABINET.
3. LOOPS CENTERED IN EACH LANE.
4. LOCATE EXISTING 1" CONDUIT STUB-OUT FROM BRIDGE RAIL. CONNECT TO NEW 1½" CONDUIT FROM NEW PULL BOX.
5. SEE SHEET E-18, DETAIL 'PB'.
6. SEE SHEET E-18, DETAIL 'DH'.
7. FOR CONTINUATION OF CONDUIT 15, SEE CONDUIT 9 ON SHEET E-2.
8. FOR CONTINUATION OF CONDUIT 9, SEE CONDUIT 8 ON SHEET E-2.

NOTE : THIS PLAN ACCURATE FOR ELECTRICAL WORK ONLY

MODIFY SIGNAL AND LIGHTING (LOCATION 1)
SEA WORLD DRIVE WEST OF ROUTE 5

SCALE: 1"=20'

E-1

EXISTING SIGNAL NO. P20.819

CU	11205	EA	085971

FOR REDUCED PLANS ORIGINAL SCALE IS IN INCHES 0 1 2 3

STATE OF CALIFORNIA - DEPARTMENT OF TRANSPORTATION
Caltrans TRAFFIC ELECTRICAL

DESIGN OVERSIGHT: JESSIE CABUGAO

CALCULATED/DESIGNED BY: BCS DATE 7/92 REVISED BY
CHECKED BY: FGC 7/92 DATE REVISED

/usr/bobs/P48/b08597e01.dgn 18-MAR-1993 10:00 bobs

FORM DC-OE-90-PF (REV. 3/88)

LAST REVISION

INTERSECTION: Sea World Dr @ Friars Rd

223 Pro[illegible]m

Group Assignment:
Field Master Assignment:

N/S Street Name: Friars
E/W Street Name: Sea World

Last Database Change:
System Ref. Number:

Row	Column # ---> / Phase # --->	1	2	3	4	5	6	7	8
		Sea World					Sea World		Friars
									2+8
0	Ped Walk		7						7
1	Ped FDW		21						20
2	Min Green	4	7				7		4
3	Type 3 Limit								
4	Add/Veh								
5	Veh Extn	2.0	4.0				5.2		2.0
6	Max Gap	2.0	4.0				5.2		2.0
7	Min Gap	2.0	0.2				0.2		2.0
8	Max Limit	30	60				60		40
9	Max Limit 2								
A	Bus Adv								
B	Call to Phs								
C	Reduce By		0.1				0.1		
D	Every		0.8				0.6		
E	Yellow	3.4	5.2				4.4		5.2
F	Red Clear	1.0	1.0				1.0		1.0
	Grade								

Phase Timing - Bank 1
F + Phase + Row

<F Page>

	E
RR-1 Delay	
RR-1 Clear	
EV-A Delay	
EV-A Clear	
EV-B Delay	
EV-B Clear	
EV-C Delay	
EV-C Clear	
EV-D Delay	
EV-D Clear	
RR-2 Delay	
RR-2 Clear	
View EV Delay	---
View EV Clear	---
View RR Delay	---
View RR Clear	---

Preempt Timing
F + E + Row

Row		F
0	Permit	12___6_8
1	Red Lock	
2	Yellow Lock	
3	Min Recall	_2___6__
4	Ped Recall	
5	Peds (View)	_2_____8
6	Rest In Walk	
7	Red Rest	
8	Dbl Entry	
9	Max Recall	
A	Soft Recall	
B	Max 2	
C	Cond Serv	
D	Ped Lock	12345678
E	Yellow Start	_2___6__
F	1st Phases	_____8

Phase Functions <F Page>
F + F + Row

Max Initial	0	F + 0 + E
Red Revert	5.0	F + 0 + F
All Red Start	0.0	F + C + O

Start / Revert Times

Drop Number		C + 0 + 0
Zone Number		C + 0 + 1
Area Number		C + 0 + 2
Area Address		C + 0 + 3
QuicNet Channel		(QuicNet)

Communication Addresses

Overlap Timing

	Row	B Green Clear	C Yellow Change	D Red Clear	O Load-Switch #
Overlap A	A				
Overlap B	B				
Overlap C	C				
Overlap D	D				

<F Page>
F + COLOR +

<D Page>
D + 0 + OVERLAP

Manual Plan	14	C + A + 1
Manual Offset	0	C + B + 1

Manual Selection

Manual Plan
0 = Automatic
1-9 = Plan 1-9
14 = Free
15 = Flash

Manual Offset
0 = Automatic
1 = Offset A
2 = Offset B
3 = Offset C

C + F + O	F	Row
Free Lag	2___6_8	0

Lag Phases <C Page>

Downtime Flash	255	(minutes)

Downtime Before Auto Manual Flash
F + 0 + 8

Disable Ports	_234____

Disable Communication Ports
D + D + 9

Timing Sheet By: FLG
Approved By: EFF
Drawing Number:
Timing Implemented On:

INTERSECTION: Sea World Dr @ Friars Rd

223 Program

Row	Time	Function	Day of Week	Column F Phases/Bits
0				
1				
2				
3				
4				
5				
6				
7				
8				
9				
A				
B				
C				
D				
E				
F				

TOD Function

7 + ROW

<D Page>

D + F + ROW

T.O.D. Functions
0 = Permitted Phases
1 = Red Lock
2 = Yellow Lock
3 = Veh Min Recall
4 = Ped Recall
5 =
6 = Rest In Walk
7 = Red Rest
8 = Double Entry
9 = Veh Max Recall
A = Veh Soft Recall
B = Maximum 2
C = Conditional Service
D = Free Lag Phases
E = Bit 1 - Local Override
Bit 2 - Phase Bank 2
Bit 3 - Phase Bank 3
Bit 4 - Disable Detector OFF Monitor
Bit 7 - Detector Count Monitor
Bit 8 - Real Time Split Monitor
F = Output Bits 1 thru 4

Row		F
0		
1	RR Overlap A - Phases	
2	RR Overlap B - Phases	
3	RR Overlap C - Phases	
4	RR Overlap D - Phases	
5	Ped 2P	2
6	Ped 6P	
7	Ped 4P	
8	Ped 8P	8
9	Yellow Flash Phases	
A	Overlap A - Phases	8
B	Overlap B - Phases	
C	Overlap C - Phases	
D	Overlap D - Phases	
E	Restricted Phases	
F	Assign 5 Outputs	1

Configuration

<E Page>

E + F + ROW

Day of Week

1 = Sunday
2 = Monday
3 = Tuesday
4 = Wednesday
5 = Thursday
6 = Friday
7 = Saturday

Assign 5 Outputs
1 = Right Turn Overlap
2 = TOD Outputs
3 = EV Beacon - Steady
4 = EV Beacon - Flashing
5 = Special Event Outputs
6 = Phase 3 & 7 Ped
7 = Advanced Warning Sign
8 =

Row		E
0	Exclusive Phases	
1	RR-1 Clear Phases	
2	RR-2 Clear Phases	
3	RR-2 Limited Service	
4	Prot / Perm Phases	
5	Overlap A - Green Omit	
6	Overlap B - Green Omit	
7	Overlap C - Green Omit	
8	Overlap D - Green Omit	
9	Overlap Yellow Flash	
A	EV-A Phases	
B	EV-B Phases	
C	EV-C Phases	
D	EV-D Phases	
E	Extra 1 Config. Bits	1_34
F	IC Select (Interconnect)	2

For access, set F + 9 + E = 1

Configuration

E + E + ROW

Extra 1 Flags
1 = TBC Type 1
2 = NEMA Ext. Coord
3 = Auto Daylight Savings
4 = EV Advance
5 = Remote Download
6 = Special Event
7 = Pretimed Operation
8 = Split Ring Operation

IC Select Flags
1 =
2 = Modem
3 = 7-Wire Slave
4 = Flash / Free
5 =
6 = Simplex Master
7 = 7-Wire Master
8 = Offset Interrupter

Time and Date

8-0 Hour, Minute, Day-of-Week
8-1 Day-of-Month, Year, Month
8-F Seconds

Disable Parity	0

D+B+0

Dial-Up Telephone Communications

(If set to a non-zero value, parity will be disabled)

Program Information

C + C + 0 = program
C + C + F = version

Remote Download

C + 0 + 4 = 1 -255
w/ E + E + E bit 5 on

Row	1 Delay	3 Carry-over
0		
1		1.8
2		
3		
4		
5		
6		
7		
8		
9		
A		
B		
C		
D		
E	---	---
F	---	---

Detector Name	332 Input File	Detector Number
	1I1	14
	2I2U	1
	2I2L	5
	2I3U	21
	2I3L	25
	2I4	9
	3I5	16
	4I6U	3
	4I6L	7
	4I7U	23
	4I7L	27
	4I8	11
	1I9U	18
	3I9L	20
---	---	---
---	---	---

Row	2 Delay	4 Carry-over
0		
1		1.8
2		
3		
4		
5		
6		
7		
8		
9		
A		
B		
C		
D		
E	---	---
F	---	---

Detector Name	332 Input File	Detector Number
	5J1	13
	6J2U	2
	6J2L	6
	6J3U	22
	6J3L	26
	6J4	10
	7J5	15
	8J6U	4
	8J6L	8
	8J7U	24
	8J7L	28
	8J8	12
	5J9U	17
	7J9L	19
---	---	---
---	---	---

Detector Delay & Carryover <D Page>

D + X (across) + ROW

Row	Detector Numbers	E
A	1 2 3 4 5 6 7 8	12345678
B	9 10 11 12 -- -- -- --	1234____
C	13 14 15 16 17 18 19 20	12345678
D	-- -- -- -- 21 22 23 24	____5678
E	-- -- -- -- -- -- -- --	1234____
F	-- 25 26 27 28 -- -- --	_2345___

Active Detectors <D Page>

Row		0 Detector #
0		
1	System Det. # 1	
2	System Det. # 2	
3	System Det. # 3	
4	System Det. # 4	
5	System Det. # 5	
6	System Det. # 6	
7	System Det. # 7	
8	System Det. # 8	

System Detectors <D Page>

Max ON (min)	5	D+A+E
Max OFF (min)	60	D+A+F

Detector Failure Monitor

Phase Number		F+C+1
Time Before Yellow		F+C+3

Advance Warning Beacon - Sign 1

Phase Number		F+D+1
Time Before Yellow		F+D+3

Advance Warning Beacon - Sign 2

Long Failure	0.5	F+0+6
Short Failure	0.5	F+0+7

Power Cycle Correction (Default = 0.5)

APPENDIX E

PEAK HOUR INTERSECTION ANALYSIS WORKSHEETS – EXISTING

Movement	EBL	EBT	EBR	WBL	WBT	WBR	NBL	NBT	NBR	SBL	SBT	SBR
Lane Configurations												
Volume (veh/h)	42	46	81	28	110	60	203	1007	73	122	664	107
Number	7	4	14	3	8	18	5	2	12	1	6	16
Initial Q (Qb), veh	0	0	0	0	0	0	0	0	0	0	0	0
Ped-Bike Adj(A_pbT)	1.00		0.95	1.00		0.96	1.00		1.00	1.00		0.99
Parking Bus, Adj	1.00	1.00	1.00	1.00	1.00	1.00	1.00	1.00	1.00	1.00	1.00	1.00
Adj Sat Flow, veh/h/ln	1863	1863	1863	1863	1863	1863	1863	1863	1900	1863	1863	1863
Adj Flow Rate, veh/h	45	49	87	30	118	65	218	1083	78	131	714	115
Adj No. of Lanes	2	1	1	1	1	1	2	2	0	1	2	1
Peak Hour Factor	0.93	0.93	0.93	0.93	0.93	0.93	0.93	0.93	0.93	0.93	0.93	0.93
Percent Heavy Veh, %	2	2	2	2	2	2	2	2	2	2	2	2
Cap, veh/h	116	233	188	45	217	178	316	1572	113	166	1669	790
Arrive On Green	0.03	0.12	0.12	0.03	0.12	0.12	0.09	0.47	0.47	0.09	0.47	0.47
Sat Flow, veh/h	3442	1863	1505	1774	1863	1525	3442	3349	241	1774	3539	1564
Grp Volume(v), veh/h	45	49	87	30	118	65	218	572	589	131	714	115
Grp Sat Flow(s),veh/h/ln	1721	1863	1505	1774	1863	1525	1721	1770	1820	1774	1770	1564
Q Serve(g_s), s	0.9	1.6	3.7	1.1	4.1	2.7	4.2	17.3	17.4	4.9	9.1	2.7
Cycle Q Clear(g_c), s	0.9	1.6	3.7	1.1	4.1	2.7	4.2	17.3	17.4	4.9	9.1	2.7
Prop In Lane	1.00		1.00	1.00		1.00	1.00		0.13	1.00		1.00
Lane Grp Cap(c), veh/h	116	233	188	45	217	178	316	831	855	166	1669	790
V/C Ratio(X)	0.39	0.21	0.46	0.67	0.54	0.37	0.69	0.69	0.69	0.79	0.43	0.15
Avail Cap(c_a), veh/h	206	844	682	104	830	680	563	908	933	277	1794	846
HCM Platoon Ratio	1.00	1.00	1.00	1.00	1.00	1.00	1.00	1.00	1.00	1.00	1.00	1.00
Upstream Filter(I)	1.00	1.00	1.00	1.00	1.00	1.00	1.00	1.00	1.00	1.00	1.00	1.00
Uniform Delay (d), s/veh	32.4	26.9	27.8	33.1	28.5	27.9	30.1	14.2	14.2	30.3	12.0	9.0
Incr Delay (d2), s/veh	0.8	0.4	1.8	6.1	0.8	0.5	1.0	2.2	2.2	3.1	0.2	0.1
Initial Q Delay(d3),s/veh	0.0	0.0	0.0	0.0	0.0	0.0	0.0	0.0	0.0	0.0	0.0	0.0
%ile BackOfQ(50%),veh/ln	0.4	0.9	1.6	0.6	2.1	1.2	2.0	8.9	9.2	2.5	4.5	1.2
LnGrp Delay(d),s/veh	33.2	27.4	29.6	39.2	29.3	28.3	31.1	16.4	16.4	33.5	12.2	9.2
LnGrp LOS	C	C	C	D	C	C	C	B	B	C	B	A
Approach Vol, veh/h		181			213			1379			960	
Approach Delay, s/veh		29.9			30.4			18.7			14.8	
Approach LOS		C			C			B			B	

Timer	1	2	3	4	5	6	7	8
Assigned Phs	1	2	3	4	5	6	7	8
Phs Duration (G+Y+Rc), s	10.8	37.4	6.1	14.1	10.7	37.6	6.7	13.5
Change Period (Y+Rc), s	4.4	5.3	4.4	* 5.5	4.4	* 5.3	4.4	5.5
Max Green Setting (Gmax), s	10.7	35.1	4.0	* 31	11.2	* 35	4.1	30.5
Max Q Clear Time (g_c+I1), s	6.9	19.4	3.1	5.7	6.2	11.1	2.9	6.1
Green Ext Time (p_c), s	0.1	12.8	0.0	1.1	0.2	17.8	0.0	1.1

Intersection Summary	
HCM 2010 Ctrl Delay	19.0
HCM 2010 LOS	B

Notes

* HCM 2010 computational engine requires equal clearance times for the phases crossing the barrier.

Movement	EBL	EBT	EBR	WBL	WBT	WBR	NBL	NBT	NBR	SBL	SBT	SBR
Lane Configurations												
Volume (veh/h)	0	1038	71	365	241	0	0	0	0	297	0	652
Number	5	2	12	1	6	16				7	4	14
Initial Q (Qb), veh	0	0	0	0	0	0				0	0	0
Ped-Bike Adj(A_pbT)	1.00		1.00	1.00		1.00				1.00		1.00
Parking Bus, Adj	1.00	1.00	1.00	1.00	1.00	1.00				1.00	1.00	1.00
Adj Sat Flow, veh/h/ln	0	1863	1863	1863	1863	0				1900	1863	1863
Adj Flow Rate, veh/h	0	1070	73	376	248	0				306	0	0
Adj No. of Lanes	0	2	1	2	2	0				0	1	1
Peak Hour Factor	0.97	0.97	0.97	0.97	0.97	0.97				0.97	0.97	0.97
Percent Heavy Veh, %	0	2	2	2	2	0				2	2	2
Cap, veh/h	0	1872	837	456	2490	0				356	0	318
Arrive On Green	0.00	0.53	0.53	0.04	0.23	0.00				0.20	0.00	0.00
Sat Flow, veh/h	0	3632	1583	3442	3632	0				1774	0	1583
Grp Volume(v), veh/h	0	1070	73	376	248	0				306	0	0
Grp Sat Flow(s),veh/h/ln	0	1770	1583	1721	1770	0				1774	0	1583
Q Serve(g_s), s	0.0	20.4	2.3	10.8	5.5	0.0				16.7	0.0	0.0
Cycle Q Clear(g_c), s	0.0	20.4	2.3	10.8	5.5	0.0				16.7	0.0	0.0
Prop In Lane	0.00		1.00	1.00		0.00				1.00		1.00
Lane Grp Cap(c), veh/h	0	1872	837	456	2490	0				356	0	318
V/C Ratio(X)	0.00	0.57	0.09	0.82	0.10	0.00				0.86	0.00	0.00
Avail Cap(c_a), veh/h	0	1872	837	544	2490	0				539	0	481
HCM Platoon Ratio	1.00	1.00	1.00	0.33	0.33	1.00				1.00	1.00	1.00
Upstream Filter(I)	0.00	1.00	1.00	0.71	0.71	0.00				1.00	0.00	0.00
Uniform Delay (d), s/veh	0.0	15.9	11.6	46.7	13.5	0.0				38.6	0.0	0.0
Incr Delay (d2), s/veh	0.0	1.3	0.2	6.2	0.1	0.0				8.8	0.0	0.0
Initial Q Delay(d3),s/veh	0.0	0.0	0.0	0.0	0.0	0.0				0.0	0.0	0.0
%ile BackOfQ(50%),veh/ln	0.0	10.3	1.0	5.6	2.7	0.0				9.0	0.0	0.0
LnGrp Delay(d),s/veh	0.0	17.2	11.8	52.9	13.6	0.0				47.4	0.0	0.0
LnGrp LOS		B	B	D	B					D		
Approach Vol, veh/h		1143			624						306	
Approach Delay, s/veh		16.8			37.3						47.4	
Approach LOS		B			D						D	

Timer	1	2	3	4	5	6	7	8
Assigned Phs	1	2		4		6		
Phs Duration (G+Y+Rc), s	17.5	57.9		24.7		75.3		
Change Period (Y+Rc), s	* 4.2	5.0		4.6		5.0		
Max Green Setting (Gmax), s	* 16	40.0		30.4		60.0		
Max Q Clear Time (g_c+I1), s	12.8	22.4		18.7		7.5		
Green Ext Time (p_c), s	0.4	9.2		1.4		14.0		

Intersection Summary	
HCM 2010 Ctrl Delay	27.5
HCM 2010 LOS	C

Notes

* HCM 2010 computational engine requires equal clearance times for the phases crossing the barrier.

Movement	EBL	EBT	EBR	WBL	WBT	WBR	NBL	NBT	NBR	SBL	SBT	SBR
Lane Configurations												
Volume (veh/h)	783	552	0	0	510	521	96	3	201	0	0	0
Number	5	2	12	1	6	16	7	4	14			
Initial Q (Qb), veh	0	0	0	0	0	0	0	0	0			
Ped-Bike Adj(A_pbT)	1.00		1.00	1.00		0.98	1.00		1.00			
Parking Bus, Adj	1.00	1.00	1.00	1.00	1.00	1.00	1.00	1.00	1.00			
Adj Sat Flow, veh/h/ln	1863	1863	0	0	1863	1900	1900	1863	1863			
Adj Flow Rate, veh/h	824	581	0	0	537	548	101	3	212			
Adj No. of Lanes	2	2	0	0	2	0	0	1	1			
Peak Hour Factor	0.95	0.95	0.95	0.95	0.95	0.95	0.95	0.95	0.95			
Percent Heavy Veh, %	2	2	0	0	2	2	2	2	2			
Cap, veh/h	909	2708	0	0	812	714	231	7	212			
Arrive On Green	0.44	1.00	0.00	0.00	0.46	0.46	0.13	0.13	0.13			
Sat Flow, veh/h	3442	3632	0	0	1863	1556	1725	51	1583			
Grp Volume(v), veh/h	824	581	0	0	537	548	104	0	212			
Grp Sat Flow(s),veh/h/ln	1721	1770	0	0	1770	1556	1776	0	1583			
Q Serve(g_s), s	22.3	0.0	0.0	0.0	23.6	29.4	5.4	0.0	13.4			
Cycle Q Clear(g_c), s	22.3	0.0	0.0	0.0	23.6	29.4	5.4	0.0	13.4			
Prop In Lane	1.00		0.00	0.00		1.00	0.97		1.00			
Lane Grp Cap(c), veh/h	909	2708	0	0	812	714	238	0	212			
V/C Ratio(X)	0.91	0.21	0.00	0.00	0.66	0.77	0.44	0.00	1.00			
Avail Cap(c_a), veh/h	1094	2708	0	0	812	714	238	0	212			
HCM Platoon Ratio	1.67	1.67	1.00	1.00	1.00	1.00	1.00	1.00	1.00			
Upstream Filter(I)	0.71	0.71	0.00	0.00	0.84	0.84	1.00	0.00	1.00			
Uniform Delay (d), s/veh	26.8	0.0	0.0	0.0	21.0	22.6	39.8	0.0	43.3			
Incr Delay (d2), s/veh	7.1	0.1	0.0	0.0	3.5	6.6	1.3	0.0	61.5			
Initial Q Delay(d3),s/veh	0.0	0.0	0.0	0.0	0.0	0.0	0.0	0.0	0.0			
%ile BackOfQ(50%),veh/ln	11.4	0.0	0.0	0.0	12.3	13.9	2.7	0.0	14.6			
LnGrp Delay(d),s/veh	33.9	0.1	0.0	0.0	24.6	29.2	41.1	0.0	104.8			
LnGrp LOS	C	A			C	C	D		F			
Approach Vol, veh/h		1405			1085			316				
Approach Delay, s/veh		20.0			26.9			83.9				
Approach LOS		B			C			F				

Timer	1	2	3	4	5	6	7	8
Assigned Phs		2		4	5	6		
Phs Duration (G+Y+Rc), s		82.0		18.0	30.6	51.4		
Change Period (Y+Rc), s		5.5		4.6	* 4.2	5.5		
Max Green Setting (Gmax), s		76.5		13.4	* 32	40.5		
Max Q Clear Time (g_c+I1), s		2.0		15.4	24.3	31.4		
Green Ext Time (p_c), s		19.9		0.0	2.1	6.6		

Intersection Summary	
HCM 2010 Ctrl Delay	29.8
HCM 2010 LOS	C

Notes

* HCM 2010 computational engine requires equal clearance times for the phases crossing the barrier.

Movement	EBL	EBT	EBR	WBL	WBT	WBR	NBL	NBT	NBR	SBL	SBT	SBR
Lane Configurations												
Volume (veh/h)	431	59	333	10	24	11	386	195	31	18	132	477
Number	5	2	12	1	6	16	3	8	18	7	4	14
Initial Q (Qb), veh	0	0	0	0	0	0	0	0	0	0	0	0
Ped-Bike Adj(A_pbT)	1.00		1.00	1.00		1.00	1.00		1.00	1.00		1.00
Parking Bus, Adj	1.00	1.00	1.00	1.00	1.00	1.00	1.00	1.00	1.00	1.00	1.00	1.00
Adj Sat Flow, veh/h/ln	1863	1863	1863	1863	1863	1900	1863	1863	1900	1900	1863	1863
Adj Flow Rate, veh/h	463	63	358	11	26	12	437	179	33	19	406	337
Adj No. of Lanes	2	1	1	1	2	0	2	1	0	0	1	1
Peak Hour Factor	0.93	0.93	0.93	0.93	0.93	0.93	0.93	0.93	0.93	0.93	0.93	0.93
Percent Heavy Veh, %	2	2	2	2	2	2	2	2	2	2	2	2
Cap, veh/h	932	504	711	107	146	63	633	273	50	18	394	352
Arrive On Green	0.27	0.27	0.27	0.06	0.06	0.06	0.18	0.18	0.18	0.22	0.22	0.22
Sat Flow, veh/h	3442	1863	1583	1774	2411	1038	3548	1531	282	83	1776	1583
Grp Volume(v), veh/h	463	63	358	11	19	19	437	0	212	425	0	337
Grp Sat Flow(s),veh/h/ln	1721	1863	1583	1774	1770	1679	1774	0	1813	1859	0	1583
Q Serve(g_s), s	8.3	1.9	11.7	0.4	0.7	0.8	8.4	0.0	7.9	16.2	0.0	15.4
Cycle Q Clear(g_c), s	8.3	1.9	11.7	0.4	0.7	0.8	8.4	0.0	7.9	16.2	0.0	15.4
Prop In Lane	1.00		1.00	1.00		0.62	1.00		0.16	0.04		1.00
Lane Grp Cap(c), veh/h	932	504	711	107	107	101	633	0	323	413	0	352
V/C Ratio(X)	0.50	0.12	0.50	0.10	0.17	0.19	0.69	0.00	0.66	1.03	0.00	0.96
Avail Cap(c_a), veh/h	1368	740	912	438	437	414	1323	0	676	413	0	352
HCM Platoon Ratio	1.00	1.00	1.00	1.00	1.00	1.00	1.00	1.00	1.00	1.00	1.00	1.00
Upstream Filter(I)	1.00	1.00	1.00	1.00	1.00	1.00	1.00	0.00	1.00	1.00	0.00	1.00
Uniform Delay (d), s/veh	22.4	20.1	14.3	32.4	32.6	32.6	28.1	0.0	27.9	28.4	0.0	28.1
Incr Delay (d2), s/veh	0.8	0.2	1.1	0.4	0.8	0.9	1.4	0.0	2.3	52.2	0.0	37.1
Initial Q Delay(d3),s/veh	0.0	0.0	0.0	0.0	0.0	0.0	0.0	0.0	0.0	0.0	0.0	0.0
%ile BackOfQ(50%),veh/ln	4.0	1.0	7.0	0.2	0.4	0.4	4.2	0.0	4.1	14.2	0.0	10.3
LnGrp Delay(d),s/veh	23.2	20.3	15.4	32.8	33.3	33.5	29.5	0.0	30.2	80.6	0.0	65.2
LnGrp LOS	C	C	B	C	C	C	C		C	F		E
Approach Vol, veh/h		884			49			649			762	
Approach Delay, s/veh		19.8			33.3			29.7			73.8	
Approach LOS		B			C			C			E	

Timer	1	2	3	4	5	6	7	8
Assigned Phs		2		4		6		8
Phs Duration (G+Y+Rc), s		24.7		21.1		9.3		17.9
Change Period (Y+Rc), s		4.9		4.9		4.9		4.9
Max Green Setting (Gmax), s		29.0		16.2		18.0		27.2
Max Q Clear Time (g_c+I1), s		13.7		18.2		2.8		10.4
Green Ext Time (p_c), s		6.0		0.0		0.1		2.6

Intersection Summary	
HCM 2010 Ctrl Delay	40.4
HCM 2010 LOS	D

Notes

User approved volume balancing among the lanes for turning movement.

Movement	EBL	EBT	EBR	WBL	WBT	WBR	NBL	NBT	NBR	SBL	SBT	SBR
Lane Configurations												
Volume (veh/h)	21	5	25	63	4	13	13	647	17	4	368	39
Number	7	4	14	3	8	18	5	2	12	1	6	16
Initial Q (Qb), veh	0	0	0	0	0	0	0	0	0	0	0	0
Ped-Bike Adj(A_pbT)	1.00		1.00	1.00		1.00	1.00		1.00	1.00		1.00
Parking Bus, Adj	1.00	1.00	1.00	1.00	1.00	1.00	1.00	1.00	1.00	1.00	1.00	1.00
Adj Sat Flow, veh/h/ln	1900	1863	1900	1900	1863	1900	1863	1863	1900	1863	1863	1900
Adj Flow Rate, veh/h	23	5	27	69	4	14	14	711	19	4	404	43
Adj No. of Lanes	0	1	0	0	1	0	1	1	0	1	1	0
Peak Hour Factor	0.91	0.91	0.91	0.91	0.91	0.91	0.91	0.91	0.91	0.91	0.91	0.91
Percent Heavy Veh, %	2	2	2	2	2	2	2	2	2	2	2	2
Cap, veh/h	97	26	65	167	7	20	23	1355	36	8	1227	131
Arrive On Green	0.08	0.08	0.08	0.08	0.08	0.08	0.01	0.75	0.75	0.00	0.74	0.74
Sat Flow, veh/h	522	340	831	1223	89	251	1774	1806	48	1774	1655	176
Grp Volume(v), veh/h	55	0	0	87	0	0	14	0	730	4	0	447
Grp Sat Flow(s),veh/h/ln	1693	0	0	1563	0	0	1774	0	1854	1774	0	1832
Q Serve(g_s), s	0.0	0.0	0.0	2.0	0.0	0.0	0.7	0.0	14.6	0.2	0.0	7.5
Cycle Q Clear(g_c), s	2.7	0.0	0.0	4.7	0.0	0.0	0.7	0.0	14.6	0.2	0.0	7.5
Prop In Lane	0.42		0.49	0.79		0.16	1.00		0.03	1.00		0.10
Lane Grp Cap(c), veh/h	188	0	0	193	0	0	23	0	1391	8	0	1358
V/C Ratio(X)	0.29	0.00	0.00	0.45	0.00	0.00	0.60	0.00	0.52	0.53	0.00	0.33
Avail Cap(c_a), veh/h	761	0	0	729	0	0	79	0	1391	79	0	1358
HCM Platoon Ratio	1.00	1.00	1.00	1.00	1.00	1.00	1.00	1.00	1.00	1.00	1.00	1.00
Upstream Filter(I)	1.00	0.00	0.00	1.00	0.00	0.00	1.00	0.00	1.00	1.00	0.00	1.00
Uniform Delay (d), s/veh	39.5	0.0	0.0	40.3	0.0	0.0	44.2	0.0	4.6	44.7	0.0	4.0
Incr Delay (d2), s/veh	0.3	0.0	0.0	0.6	0.0	0.0	8.9	0.0	1.4	20.1	0.0	0.6
Initial Q Delay(d3),s/veh	0.0	0.0	0.0	0.0	0.0	0.0	0.0	0.0	0.0	0.0	0.0	0.0
%ile BackOfQ(50%),veh/ln	1.3	0.0	0.0	2.1	0.0	0.0	0.4	0.0	7.8	0.1	0.0	4.0
LnGrp Delay(d),s/veh	39.9	0.0	0.0	40.9	0.0	0.0	53.1	0.0	6.0	64.8	0.0	4.6
LnGrp LOS	D			D			D		A	E		A
Approach Vol, veh/h		55			87			744			451	
Approach Delay, s/veh		39.9			40.9			6.9			5.2	
Approach LOS		D			D			A			A	

Timer	1	2	3	4	5	6	7	8
Assigned Phs	1	2		4	5	6		8
Phs Duration (G+Y+Rc), s	4.8	73.3		11.9	5.6	72.5		11.9
Change Period (Y+Rc), s	4.4	* 5.8		4.9	4.4	5.8		4.9
Max Green Setting (Gmax), s	4.0	* 30		41.0	4.0	29.9		41.0
Max Q Clear Time (g_c+I1), s	2.2	16.6		4.7	2.7	9.5		6.7
Green Ext Time (p_c), s	0.0	8.1		0.5	0.0	10.6		0.5

Intersection Summary	
HCM 2010 Ctrl Delay	9.9
HCM 2010 LOS	A

Notes

* HCM 2010 computational engine requires equal clearance times for the phases crossing the barrier.

Movement	NBT	NBR	SBL	SBT	SWL	SWR
Lane Configurations						
Volume (veh/h)	582	697	0	355	458	4
Number	2	12	1	6	3	18
Initial Q (Qb), veh	0	0	0	0	0	0
Ped-Bike Adj(A_pbT)		1.00	1.00		1.00	1.00
Parking Bus, Adj	1.00	1.00	1.00	1.00	1.00	1.00
Adj Sat Flow, veh/h/ln	1863	1900	0	1863	1863	1900
Adj Flow Rate, veh/h	633	758	0	386	502	0
Adj No. of Lanes	2	0	0	2	2	1
Peak Hour Factor	0.92	0.92	0.92	0.92	0.92	0.92
Percent Heavy Veh, %	2	2	0	2	2	0
Cap, veh/h	852	763	0	1705	887	404
Arrive On Green	0.48	0.48	0.00	0.48	0.25	0.00
Sat Flow, veh/h	1863	1583	0	3725	3548	1615
Grp Volume(v), veh/h	633	758	0	386	502	0
Grp Sat Flow(s),veh/h/ln	1770	1583	0	1770	1774	1615
Q Serve(g_s), s	11.5	19.0	0.0	2.5	4.9	0.0
Cycle Q Clear(g_c), s	11.5	19.0	0.0	2.5	4.9	0.0
Prop In Lane		1.00	0.00		1.00	1.00
Lane Grp Cap(c), veh/h	852	763	0	1705	887	404
V/C Ratio(X)	0.74	0.99	0.00	0.23	0.57	0.00
Avail Cap(c_a), veh/h	852	763	0	1705	899	409
HCM Platoon Ratio	1.00	1.00	1.00	1.00	1.00	1.00
Upstream Filter(I)	1.00	1.00	0.00	1.00	1.00	0.00
Uniform Delay (d), s/veh	8.3	10.3	0.0	6.0	13.1	0.0
Incr Delay (d2), s/veh	5.8	31.1	0.0	0.3	0.8	0.0
Initial Q Delay(d3),s/veh	0.0	0.0	0.0	0.0	0.0	0.0
%ile BackOfQ(50%),veh/ln	6.8	14.6	0.0	1.3	2.5	0.0
LnGrp Delay(d),s/veh	14.1	41.4	0.0	6.3	13.9	0.0
LnGrp LOS	B	D		A	B	
Approach Vol, veh/h	1391			386	502	
Approach Delay, s/veh	29.0			6.3	13.9	
Approach LOS	C			A	B	

Timer	1	2	3	4	5	6	7	8
Assigned Phs		2				6		8
Phs Duration (G+Y+Rc), s		25.0				25.0		14.9
Change Period (Y+Rc), s		* 5.8				5.8		4.9
Max Green Setting (Gmax), s		* 19				10.0		10.1
Max Q Clear Time (g_c+I1), s		21.0				4.5		6.9
Green Ext Time (p_c), s		0.0				4.5		0.6

Intersection Summary	
HCM 2010 Ctrl Delay	21.8
HCM 2010 LOS	C

Notes

User approved volume balancing among the lanes for turning movement.

Movement	EBL	EBT	EBR	WBL	WBT	WBR	NBL	NBT	NBR	SBL	SBT	SBR
Lane Configurations												
Volume (veh/h)	24	11	42	4	14	557	130	678	10	429	350	45
Number	7	4	14	3	8	18	5	2	12	1	6	16
Initial Q (Qb), veh	0	0	0	0	0	0	0	0	0	0	0	0
Ped-Bike Adj(A_pbT)	1.00		1.00	1.00		1.00	1.00		1.00	1.00		1.00
Parking Bus, Adj	1.00	1.00	1.00	1.00	1.00	1.00	1.00	1.00	1.00	1.00	1.00	1.00
Adj Sat Flow, veh/h/ln	1863	1863	1900	1900	1863	1863	1863	1863	1900	1863	1863	1900
Adj Flow Rate, veh/h	26	12	46	0	0	619	141	737	11	466	380	49
Adj No. of Lanes	1	1	0	0	1	2	1	3	0	2	2	0
Peak Hour Factor	0.92	0.92	0.92	0.92	0.92	0.92	0.92	0.92	0.92	0.92	0.92	0.92
Percent Heavy Veh, %	2	2	2	2	2	2	2	2	2	2	2	2
Cap, veh/h	219	65	249	0	357	1105	170	2676	40	541	1829	234
Arrive On Green	0.19	0.19	0.19	0.00	0.00	0.19	0.10	0.52	0.52	0.16	0.58	0.58
Sat Flow, veh/h	801	338	1296	0	1863	3167	1774	5162	77	3442	3157	404
Grp Volume(v), veh/h	26	0	58	0	0	619	141	484	264	466	212	217
Grp Sat Flow(s),veh/h/ln	801	0	1634	0	1863	1583	1774	1695	1849	1721	1770	1791
Q Serve(g_s), s	3.0	0.0	3.3	0.0	0.0	17.4	8.6	8.8	8.8	14.5	6.3	6.4
Cycle Q Clear(g_c), s	3.0	0.0	3.3	0.0	0.0	17.4	8.6	8.8	8.8	14.5	6.3	6.4
Prop In Lane	1.00		0.79	0.00		1.00	1.00		0.04	1.00		0.23
Lane Grp Cap(c), veh/h	219	0	314	0	357	1105	170	1757	958	541	1025	1038
V/C Ratio(X)	0.12	0.00	0.18	0.00	0.00	0.56	0.83	0.28	0.28	0.86	0.21	0.21
Avail Cap(c_a), veh/h	321	0	521	0	594	1508	348	1757	958	895	1025	1038
HCM Platoon Ratio	1.00	1.00	1.00	1.00	1.00	1.00	1.00	1.00	1.00	1.00	1.00	1.00
Upstream Filter(I)	1.00	0.00	1.00	0.00	0.00	0.68	1.00	1.00	1.00	1.00	1.00	1.00
Uniform Delay (d), s/veh	37.1	0.0	37.2	0.0	0.0	29.0	48.8	14.9	14.9	45.2	11.1	11.1
Incr Delay (d2), s/veh	0.1	0.0	0.1	0.0	0.0	0.1	3.9	0.4	0.7	2.4	0.5	0.5
Initial Q Delay(d3),s/veh	0.0	0.0	0.0	0.0	0.0	0.0	0.0	0.0	0.0	0.0	0.0	0.0
%ile BackOfQ(50%),veh/ln	0.7	0.0	1.5	0.0	0.0	7.6	4.4	4.2	4.7	7.1	3.2	3.3
LnGrp Delay(d),s/veh	37.2	0.0	37.3	0.0	0.0	29.1	52.7	15.3	15.6	47.6	11.5	11.5
LnGrp LOS	D		D			C	D	B	B	D	B	B
Approach Vol, veh/h		84			619			889			895	
Approach Delay, s/veh		37.3			29.1			21.3			30.3	
Approach LOS		D			C			C			C	

Timer	1	2	3	4	5	6	7	8
Assigned Phs	1	2		4	5	6		8
Phs Duration (G+Y+Rc), s	21.7	62.3		26.0	15.0	69.0		26.0
Change Period (Y+Rc), s	4.4	* 5.3		4.9	4.4	5.3		4.9
Max Green Setting (Gmax), s	28.6	* 32		35.1	21.6	38.7		35.1
Max Q Clear Time (g_c+I1), s	16.5	10.8		5.3	10.6	8.4		19.4
Green Ext Time (p_c), s	0.8	8.3		1.9	0.1	9.5		1.7

Intersection Summary	
HCM 2010 Ctrl Delay	27.0
HCM 2010 LOS	C

Notes

User approved volume balancing among the lanes for turning movement.

Movement	WBL	WBR	NBT	NBR	SBL	SBT
Lane Configurations						
Volume (veh/h)	705	10	853	784	0	384
Number	3	18	2	12	1	6
Initial Q (Qb), veh	0	0	0	0	0	0
Ped-Bike Adj(A_pbT)	1.00	1.00		1.00	1.00	
Parking Bus, Adj	1.00	1.00	1.00	1.00	1.00	1.00
Adj Sat Flow, veh/h/ln	1863	1900	1863	1863	0	1863
Adj Flow Rate, veh/h	802	0	958	0	0	431
Adj No. of Lanes	2	1	2	1	0	2
Peak Hour Factor	0.89	0.89	0.89	0.89	0.89	0.89
Percent Heavy Veh, %	2	0	2	2	0	2
Cap, veh/h	993	452	1635	731	0	1635
Arrive On Green	0.28	0.00	0.46	0.00	0.00	0.46
Sat Flow, veh/h	3548	1615	3632	1583	0	3725
Grp Volume(v), veh/h	802	0	958	0	0	431
Grp Sat Flow(s),veh/h/ln	1774	1615	1770	1583	0	1770
Q Serve(g_s), s	11.6	0.0	11.0	0.0	0.0	4.1
Cycle Q Clear(g_c), s	11.6	0.0	11.0	0.0	0.0	4.1
Prop In Lane	1.00	1.00		1.00	0.00	
Lane Grp Cap(c), veh/h	993	452	1635	731	0	1635
V/C Ratio(X)	0.81	0.00	0.59	0.00	0.00	0.26
Avail Cap(c_a), veh/h	1181	537	1635	731	0	1635
HCM Platoon Ratio	1.00	1.00	1.00	1.00	1.00	1.00
Upstream Filter(I)	1.00	0.00	1.00	0.00	0.00	1.00
Uniform Delay (d), s/veh	18.4	0.0	10.9	0.0	0.0	9.1
Incr Delay (d2), s/veh	3.9	0.0	1.5	0.0	0.0	0.4
Initial Q Delay(d3),s/veh	0.0	0.0	0.0	0.0	0.0	0.0
%ile BackOfQ(50%),veh/ln	6.2	0.0	5.7	0.0	0.0	2.1
LnGrp Delay(d),s/veh	22.3	0.0	12.5	0.0	0.0	9.5
LnGrp LOS	C		B			A
Approach Vol, veh/h	802		958			431
Approach Delay, s/veh	22.3		12.5			9.5
Approach LOS	C		B			A

Timer	1	2	3	4	5	6	7	8
Assigned Phs		2				6		8
Phs Duration (G+Y+Rc), s		30.9				30.9		24.1
Change Period (Y+Rc), s		5.5				* 5.5		8.7
Max Green Setting (Gmax), s		22.5				* 23		18.3
Max Q Clear Time (g_c+I1), s		13.0				6.1		13.6
Green Ext Time (p_c), s		7.1				11.1		1.8

Intersection Summary	
HCM 2010 Ctrl Delay	15.5
HCM 2010 LOS	B

Notes

User approved volume balancing among the lanes for turning movement.

Movement	EBL	EBT	EBR	WBL	WBT	WBR	NBL	NBT	NBR	SBL	SBT	SBR
Lane Configurations												
Volume (veh/h)	322	140	26	232	272	150	27	639	139	61	451	281
Number	7	4	14	3	8	18	5	2	12	1	6	16
Initial Q (Qb), veh	0	0	0	0	0	0	0	0	0	0	0	0
Ped-Bike Adj(A_pbT)	1.00		1.00	1.00		1.00	1.00		1.00	1.00		1.00
Parking Bus, Adj	1.00	1.00	1.00	1.00	1.00	1.00	1.00	1.00	1.00	1.00	1.00	1.00
Adj Sat Flow, veh/h/ln	1863	1863	1900	1863	1863	1863	1863	1863	1900	1863	1863	1900
Adj Flow Rate, veh/h	290	296	31	200	430	179	32	761	165	73	537	335
Adj No. of Lanes	1	1	0	1	2	1	1	2	0	1	2	0
Peak Hour Factor	0.84	0.84	0.84	0.84	0.84	0.84	0.84	0.84	0.84	0.84	0.84	0.84
Percent Heavy Veh, %	2	2	2	2	2	2	2	2	2	2	2	2
Cap, veh/h	361	338	35	261	548	233	40	1211	263	93	939	585
Arrive On Green	0.20	0.20	0.20	0.15	0.15	0.15	0.02	0.42	0.42	0.05	0.45	0.45
Sat Flow, veh/h	1774	1658	174	1774	3725	1583	1774	2894	627	1774	2096	1306
Grp Volume(v), veh/h	290	0	327	200	430	179	32	465	461	73	453	419
Grp Sat Flow(s),veh/h/ln	1774	0	1832	1774	1863	1583	1774	1770	1752	1774	1770	1632
Q Serve(g_s), s	17.1	0.0	19.0	11.9	12.2	12.0	2.0	22.8	22.8	4.5	20.9	20.9
Cycle Q Clear(g_c), s	17.1	0.0	19.0	11.9	12.2	12.0	2.0	22.8	22.8	4.5	20.9	20.9
Prop In Lane	1.00		0.09	1.00		1.00	1.00		0.36	1.00		0.80
Lane Grp Cap(c), veh/h	361	0	373	261	548	233	40	740	733	93	793	732
V/C Ratio(X)	0.80	0.00	0.88	0.77	0.78	0.77	0.80	0.63	0.63	0.78	0.57	0.57
Avail Cap(c_a), veh/h	421	0	435	389	816	347	69	740	733	118	793	732
HCM Platoon Ratio	1.00	1.00	1.00	1.00	1.00	1.00	1.00	1.00	1.00	1.00	1.00	1.00
Upstream Filter(I)	0.65	0.00	0.65	1.00	1.00	1.00	1.00	1.00	1.00	1.00	1.00	1.00
Uniform Delay (d), s/veh	41.7	0.0	42.4	45.1	45.2	45.1	53.5	25.2	25.2	51.5	22.5	22.5
Incr Delay (d2), s/veh	6.3	0.0	11.3	2.4	1.5	2.7	12.3	4.0	4.1	17.7	3.0	3.2
Initial Q Delay(d3),s/veh	0.0	0.0	0.0	0.0	0.0	0.0	0.0	0.0	0.0	0.0	0.0	0.0
%ile BackOfQ(50%),veh/ln	9.0	0.0	10.8	6.0	6.4	5.4	1.1	11.9	11.8	2.6	10.9	10.1
LnGrp Delay(d),s/veh	48.0	0.0	53.7	47.5	46.7	47.8	65.8	29.3	29.3	69.2	25.5	25.8
LnGrp LOS	D		D	D	D	D	E	C	C	E	C	C
Approach Vol, veh/h		617			809			958			945	
Approach Delay, s/veh		51.0			47.2			30.5			29.0	
Approach LOS		D			D			C			C	

Timer	1	2	3	4	5	6	7	8
Assigned Phs	1	2		4	5	6		8
Phs Duration (G+Y+Rc), s	10.2	51.4		27.3	6.9	54.7		21.1
Change Period (Y+Rc), s	4.4	* 5.4		4.9	4.4	5.4		4.9
Max Green Setting (Gmax), s	7.3	* 33		26.1	4.3	35.9		24.1
Max Q Clear Time (g_c+I1), s	16.5	24.8		21.0	4.0	22.9		14.2
Green Ext Time (p_c), s	0.0	5.1		1.4	0.0	6.8		1.9

Intersection Summary	
HCM 2010 Ctrl Delay	37.9
HCM 2010 LOS	D

Notes

User approved volume balancing among the lanes for turning movement.

Movement	EBL	EBT	EBR	WBL	WBT	WBR	NBL	NBT	NBR	SBL	SBT	SBR
Lane Configurations												
Volume (veh/h)	439	646	30	4	668	45	95	16	3	10	0	44
Number	5	2	12	1	6	16	3	8	18	7	4	14
Initial Q (Qb), veh	0	0	0	0	0	0	0	0	0	0	0	0
Ped-Bike Adj(A_pbT)	1.00		1.00	1.00		1.00	1.00		1.00	1.00		1.00
Parking Bus, Adj	1.00	1.00	1.00	1.00	1.00	1.00	1.00	1.00	1.00	1.00	1.00	1.00
Adj Sat Flow, veh/h/ln	1863	1863	1900	1863	1863	1900	1900	1863	1900	1900	1863	1863
Adj Flow Rate, veh/h	523	769	36	5	795	54	113	19	4	12	0	52
Adj No. of Lanes	1	2	0	1	2	0	0	1	0	0	1	1
Peak Hour Factor	0.84	0.84	0.84	0.84	0.84	0.84	0.84	0.84	0.84	0.84	0.84	0.84
Percent Heavy Veh, %	2	2	2	2	2	2	2	2	2	2	2	2
Cap, veh/h	548	2535	119	9	1454	99	196	24	5	253	0	684
Arrive On Green	0.31	0.74	0.74	0.01	0.43	0.43	0.12	0.12	0.12	0.12	0.00	0.12
Sat Flow, veh/h	1774	3443	161	1774	3364	228	1105	196	39	1523	0	1583
Grp Volume(v), veh/h	523	395	410	5	418	431	136	0	0	12	0	52
Grp Sat Flow(s),veh/h/ln	1774	1770	1834	1774	1770	1822	1340	0	0	1523	0	1583
Q Serve(g_s), s	31.8	8.3	8.3	0.3	19.3	19.3	10.3	0.0	0.0	0.0	0.0	2.1
Cycle Q Clear(g_c), s	31.8	8.3	8.3	0.3	19.3	19.3	11.0	0.0	0.0	0.8	0.0	2.1
Prop In Lane	1.00		0.09	1.00		0.13	0.83		0.03	1.00		1.00
Lane Grp Cap(c), veh/h	548	1303	1351	9	765	788	225	0	0	253	0	684
V/C Ratio(X)	0.95	0.30	0.30	0.55	0.55	0.55	0.61	0.00	0.00	0.05	0.00	0.08
Avail Cap(c_a), veh/h	574	1303	1351	65	765	788	423	0	0	447	0	907
HCM Platoon Ratio	1.00	1.00	1.00	1.00	1.00	1.00	1.00	1.00	1.00	1.00	1.00	1.00
Upstream Filter(I)	1.00	1.00	1.00	1.00	1.00	1.00	1.00	0.00	0.00	1.00	0.00	1.00
Uniform Delay (d), s/veh	37.2	4.9	4.9	54.6	23.2	23.2	47.5	0.0	0.0	42.6	0.0	18.3
Incr Delay (d2), s/veh	25.5	0.6	0.6	17.6	2.8	2.7	1.0	0.0	0.0	0.0	0.0	0.0
Initial Q Delay(d3),s/veh	0.0	0.0	0.0	0.0	0.0	0.0	0.0	0.0	0.0	0.0	0.0	0.0
%ile BackOfQ(50%),veh/ln	19.4	4.3	4.4	0.2	10.0	10.3	4.1	0.0	0.0	0.3	0.0	0.9
LnGrp Delay(d),s/veh	62.7	5.5	5.5	72.2	26.0	25.9	48.4	0.0	0.0	42.7	0.0	18.4
LnGrp LOS	E	A	A	E	C	C	D			D		B
Approach Vol, veh/h		1328			854			136			64	
Approach Delay, s/veh		28.0			26.2			48.4			22.9	
Approach LOS		C			C			D			C	

Timer	1	2	3	4	5	6	7	8
Assigned Phs	1	2		4	5	6		8
Phs Duration (G+Y+Rc), s	5.0	86.6		18.4	38.4	53.2		18.4
Change Period (Y+Rc), s	4.4	* 5.6		4.9	4.4	5.6		4.9
Max Green Setting (Gmax), s	4.6	* 63		29.0	35.6	30.5		29.0
Max Q Clear Time (g_c+I1), s	2.3	10.3		4.1	33.8	21.3		13.0
Green Ext Time (p_c), s	0.0	38.4		0.6	0.2	8.4		0.5

Intersection Summary	
HCM 2010 Ctrl Delay	28.4
HCM 2010 LOS	C

Notes

* HCM 2010 computational engine requires equal clearance times for the phases crossing the barrier.

Intersection	
Int Delay, s/veh	1.5

Movement	EBT	EBR	WBL	WBT	NBL	NBR
Vol, veh/h	546	15	29	636	41	32
Conflicting Peds, #/hr	0	18	0	0	0	0
Sign Control	Free	Free	Free	Free	Stop	Stop
RT Channelized	-	None	-	None	-	None
Storage Length	-	-	100	-	0	-
Veh in Median Storage, #	0	-	-	0	0	-
Grade, %	0	-	-	0	0	-
Peak Hour Factor	84	84	84	84	84	84
Heavy Vehicles, %	2	2	2	2	2	2
Mvmt Flow	650	18	35	757	49	38

Major/Minor	Major1		Major2		Minor1	
Conflicting Flow All	0	0	668	0	1107	334
Stage 1	-	-	-	-	659	-
Stage 2	-	-	-	-	448	-
Critical Hdwy	-	-	4.14	-	6.84	6.94
Critical Hdwy Stg 1	-	-	-	-	5.84	-
Critical Hdwy Stg 2	-	-	-	-	5.84	-
Follow-up Hdwy	-	-	2.22	-	3.52	3.32
Pot Cap-1 Maneuver	-	-	918	-	204	662
Stage 1	-	-	-	-	476	-
Stage 2	-	-	-	-	611	-
Platoon blocked, %	-	-		-		
Mov Cap-1 Maneuver	-	-	918	-	193	662
Mov Cap-2 Maneuver	-	-	-	-	193	-
Stage 1	-	-	-	-	476	-
Stage 2	-	-	-	-	579	-

Approach	EB	WB	NB
HCM Control Delay, s	0	0.4	23.5
HCM LOS			C

Minor Lane/Major Mvmt	NBLn1	EBT	EBR	WBL	WBT
Capacity (veh/h)	280	-	-	918	-
HCM Lane V/C Ratio	0.31	-	-	0.038	-
HCM Control Delay (s)	23.5	-	-	9.1	-
HCM Lane LOS	C	-	-	A	-
HCM 95th %tile Q(veh)	1.3	-	-	0.1	-

Movement	EBL	EBT	EBR	WBL	WBT	WBR	NBL	NBT	NBR	SBL	SBT	SBR
Lane Configurations												
Volume (veh/h)	224	442	14	4	671	205	48	5	24	19	2	35
Number	5	2	12	1	6	16	3	8	18	7	4	14
Initial Q (Qb), veh	0	0	0	0	0	0	0	0	0	0	0	0
Ped-Bike Adj(A_pbT)	1.00		0.97	1.00		0.98	1.00		0.98	1.00		0.88
Parking Bus, Adj	1.00	1.00	1.00	1.00	1.00	1.00	1.00	1.00	1.00	1.00	1.00	1.00
Adj Sat Flow, veh/h/ln	1863	1863	1900	1863	1863	1863	1863	1863	1900	1863	1863	1863
Adj Flow Rate, veh/h	264	520	16	5	789	241	56	6	28	23	0	41
Adj No. of Lanes	1	2	0	1	2	1	1	1	0	2	0	1
Peak Hour Factor	0.85	0.85	0.85	0.85	0.85	0.85	0.85	0.85	0.85	0.85	0.85	0.85
Percent Heavy Veh, %	2	2	2	2	2	2	2	2	2	2	2	2
Cap, veh/h	284	2206	68	437	1521	965	84	13	63	660	0	259
Arrive On Green	0.05	0.21	0.21	0.57	0.57	0.57	0.05	0.05	0.05	0.19	0.00	0.19
Sat Flow, veh/h	1774	3502	108	864	3539	1558	1774	282	1315	3548	0	1392
Grp Volume(v), veh/h	264	262	274	5	789	241	56	0	34	23	0	41
Grp Sat Flow(s),veh/h/ln	1774	1770	1840	864	1770	1558	1774	0	1597	1774	0	1392
Q Serve(g_s), s	16.3	13.6	13.6	0.3	14.9	6.2	3.4	0.0	2.3	0.6	0.0	2.7
Cycle Q Clear(g_c), s	16.3	13.6	13.6	0.3	14.9	6.2	3.4	0.0	2.3	0.6	0.0	2.7
Prop In Lane	1.00		0.06	1.00		1.00	1.00		0.82	1.00		1.00
Lane Grp Cap(c), veh/h	284	1115	1159	437	1521	965	84	0	76	660	0	259
V/C Ratio(X)	0.93	0.24	0.24	0.01	0.52	0.25	0.66	0.00	0.45	0.03	0.00	0.16
Avail Cap(c_a), veh/h	284	1115	1159	437	1521	965	258	0	232	871	0	342
HCM Platoon Ratio	0.33	0.33	0.33	1.33	1.33	1.33	1.00	1.00	1.00	1.00	1.00	1.00
Upstream Filter(I)	1.00	1.00	1.00	1.00	1.00	1.00	1.00	0.00	1.00	1.00	0.00	1.00
Uniform Delay (d), s/veh	51.5	21.5	21.5	13.5	16.6	7.0	51.5	0.0	51.0	36.7	0.0	37.5
Incr Delay (d2), s/veh	35.2	0.5	0.5	0.0	0.4	0.2	8.6	0.0	4.1	0.0	0.0	0.1
Initial Q Delay(d3),s/veh	0.0	0.0	0.0	0.0	0.0	0.0	0.0	0.0	0.0	0.0	0.0	0.0
%ile BackOfQ(50%),veh/ln	10.8	6.8	7.1	0.1	7.3	3.9	1.9	0.0	1.1	0.3	0.0	1.0
LnGrp Delay(d),s/veh	86.6	22.0	22.0	13.5	17.0	7.1	60.1	0.0	55.1	36.7	0.0	37.6
LnGrp LOS	F	C	C	B	B	A	E		E	D		D
Approach Vol, veh/h		800			1035			90			64	
Approach Delay, s/veh		43.3			14.7			58.2			37.3	
Approach LOS		D			B			E			D	

Timer	1	2	3	4	5	6	7	8
Assigned Phs		2		4	5	6		8
Phs Duration (G+Y+Rc), s		75.4		25.4	22.0	53.4		9.2
Change Period (Y+Rc), s		* 6.1		4.9	4.4	6.1		4.0
Max Green Setting (Gmax), s		* 53		27.0	17.6	30.0		16.0
Max Q Clear Time (g_c+I1), s		15.6		4.7	18.3	16.9		5.4
Green Ext Time (p_c), s		15.3		0.1	0.0	8.4		0.2

Intersection Summary	
HCM 2010 Ctrl Delay	28.9
HCM 2010 LOS	C

Notes

User approved volume balancing among the lanes for turning movement.

Intersection	
Int Delay, s/veh	0.7

Movement	EBL	EBT	WBT	WBR	SBL	SBR
Vol, veh/h	27	458	846	12	8	34
Conflicting Peds, #/hr	0	0	0	3	0	0
Sign Control	Free	Free	Free	Free	Stop	Stop
RT Channelized	-	None	-	None	-	None
Storage Length	140	-	-	-	0	-
Veh in Median Storage, #	-	0	0	-	0	-
Grade, %	-	0	0	-	0	-
Peak Hour Factor	87	87	87	87	87	87
Heavy Vehicles, %	2	2	2	2	2	2
Mvmt Flow	31	526	972	14	9	39

Major/Minor	Major1		Major2		Minor2	
Conflicting Flow All	986	0	-	0	1304	493
Stage 1	-	-	-	-	979	-
Stage 2	-	-	-	-	325	-
Critical Hdwy	4.14	-	-	-	6.84	6.94
Critical Hdwy Stg 1	-	-	-	-	5.84	-
Critical Hdwy Stg 2	-	-	-	-	5.84	-
Follow-up Hdwy	2.22	-	-	-	3.52	3.32
Pot Cap-1 Maneuver	696	-	-	-	152	522
Stage 1	-	-	-	-	325	-
Stage 2	-	-	-	-	705	-
Platoon blocked, %		-	-	-		
Mov Cap-1 Maneuver	696	-	-	-	145	522
Mov Cap-2 Maneuver	-	-	-	-	145	-
Stage 1	-	-	-	-	325	-
Stage 2	-	-	-	-	674	-

Approach	EB	WB	SB
HCM Control Delay, s	0.6	0	17
HCM LOS			C

Minor Lane/Major Mvmt	EBL	EBT	WBT	WBR	SBLn1
Capacity (veh/h)	696	-	-	-	349
HCM Lane V/C Ratio	0.045	-	-	-	0.138
HCM Control Delay (s)	10.4	-	-	-	17
HCM Lane LOS	B	-	-	-	C
HCM 95th %tile Q(veh)	0.1	-	-	-	0.5

Movement	EBL	EBT	EBR	WBL	WBT	WBR	NBL	NBT	NBR	SBL	SBT	SBR
Lane Configurations												
Volume (veh/h)	11	428	27	115	651	17	148	16	272	32	43	59
Number	5	2	12	1	6	16	3	8	18	7	4	14
Initial Q (Qb), veh	0	0	0	0	0	0	0	0	0	0	0	0
Ped-Bike Adj(A_pbT)	1.00		0.98	1.00		0.97	1.00		0.97	1.00		1.00
Parking Bus, Adj	1.00	1.00	1.00	1.00	1.00	1.00	1.00	1.00	1.00	1.00	1.00	1.00
Adj Sat Flow, veh/h/ln	1863	1863	1863	1863	1863	1900	1863	1863	1863	1863	1863	1863
Adj Flow Rate, veh/h	14	528	33	142	804	21	183	20	336	40	53	73
Adj No. of Lanes	1	2	1	1	2	0	1	1	1	1	1	1
Peak Hour Factor	0.81	0.81	0.81	0.81	0.81	0.81	0.81	0.81	0.81	0.81	0.81	0.81
Percent Heavy Veh, %	2	2	2	2	2	2	2	2	2	2	2	2
Cap, veh/h	22	1632	716	170	1917	50	212	421	500	51	252	214
Arrive On Green	0.03	0.92	0.92	0.10	0.54	0.54	0.12	0.23	0.23	0.03	0.14	0.14
Sat Flow, veh/h	1774	3539	1554	1774	3521	92	1774	1863	1541	1774	1863	1583
Grp Volume(v), veh/h	14	528	33	142	404	421	183	20	336	40	53	73
Grp Sat Flow(s),veh/h/ln	1774	1770	1554	1774	1770	1844	1774	1863	1541	1774	1863	1583
Q Serve(g_s), s	0.9	1.8	0.2	8.7	14.8	14.8	11.1	0.9	20.8	2.5	2.8	4.6
Cycle Q Clear(g_c), s	0.9	1.8	0.2	8.7	14.8	14.8	11.1	0.9	20.8	2.5	2.8	4.6
Prop In Lane	1.00		1.00	1.00		0.05	1.00		1.00	1.00		1.00
Lane Grp Cap(c), veh/h	22	1632	716	170	963	1004	212	421	500	51	252	214
V/C Ratio(X)	0.62	0.32	0.05	0.83	0.42	0.42	0.86	0.05	0.67	0.79	0.21	0.34
Avail Cap(c_a), veh/h	65	1632	716	219	963	1004	252	586	637	108	440	374
HCM Platoon Ratio	2.00	2.00	2.00	1.00	1.00	1.00	1.00	1.00	1.00	1.00	1.00	1.00
Upstream Filter(I)	1.00	1.00	1.00	1.00	1.00	1.00	1.00	1.00	1.00	1.00	1.00	1.00
Uniform Delay (d), s/veh	53.3	2.4	2.3	48.9	14.8	14.8	47.5	33.3	32.3	53.1	42.3	43.1
Incr Delay (d2), s/veh	10.1	0.5	0.1	15.4	1.3	1.3	20.1	0.0	1.0	9.5	0.2	0.3
Initial Q Delay(d3),s/veh	0.0	0.0	0.0	0.0	0.0	0.0	0.0	0.0	0.0	0.0	0.0	0.0
%ile BackOfQ(50%),veh/ln	0.5	0.9	0.1	5.0	7.5	7.8	6.6	0.5	9.0	1.3	1.4	2.0
LnGrp Delay(d),s/veh	63.4	2.9	2.4	64.3	16.1	16.1	67.6	33.3	33.3	62.6	42.5	43.5
LnGrp LOS	E	A	A	E	B	B	E	C	C	E	D	D
Approach Vol, veh/h		575			967			539			166	
Approach Delay, s/veh		4.4			23.2			44.9			47.8	
Approach LOS		A			C			D			D	

Timer	1	2	3	4	5	6	7	8
Assigned Phs	1	2	3	4	5	6	7	8
Phs Duration (G+Y+Rc), s	15.0	57.4	17.6	20.1	5.8	66.6	7.6	30.1
Change Period (Y+Rc), s	4.4	* 6.7	4.4	* 5.2	4.4	6.7	4.4	5.2
Max Green Setting (Gmax), s	13.6	* 35	15.6	* 26	4.0	44.0	6.7	34.6
Max Q Clear Time (g_c+I1), s	10.7	3.8	13.1	6.6	2.9	16.8	4.5	22.8
Green Ext Time (p_c), s	0.0	7.3	0.1	1.0	0.0	7.1	0.0	0.9

Intersection Summary	
HCM 2010 Ctrl Delay	25.4
HCM 2010 LOS	C

Notes

* HCM 2010 computational engine requires equal clearance times for the phases crossing the barrier.

Movement	EBL	EBT	EBR	WBL	WBT	WBR	NBL	NBT	NBR	SBL	SBT	SBR
Lane Configurations												
Volume (veh/h)	17	34	42	59	15	43	6	472	48	41	551	9
Number	7	4	14	3	8	18	5	2	12	1	6	16
Initial Q (Qb), veh	0	0	0	0	0	0	0	0	0	0	0	0
Ped-Bike Adj(A_pbT)	0.99		0.94	0.95		0.98	1.00		0.96	1.00		0.97
Parking Bus, Adj	1.00	1.00	1.00	1.00	1.00	1.00	1.00	1.00	1.00	1.00	1.00	1.00
Adj Sat Flow, veh/h/ln	1900	1863	1900	1900	1863	1900	1863	1863	1900	1863	1863	1900
Adj Flow Rate, veh/h	20	41	51	71	18	52	7	569	58	49	664	11
Adj No. of Lanes	0	1	0	0	1	0	1	2	0	1	2	0
Peak Hour Factor	0.83	0.83	0.83	0.83	0.83	0.83	0.83	0.83	0.83	0.83	0.83	0.83
Percent Heavy Veh, %	2	2	2	2	2	2	2	2	2	2	2	2
Cap, veh/h	79	143	146	192	57	111	13	1942	197	62	2239	37
Arrive On Green	0.20	0.20	0.20	0.20	0.20	0.20	0.01	0.60	0.60	0.07	1.00	1.00
Sat Flow, veh/h	160	714	731	662	288	555	1774	3231	328	1774	3561	59
Grp Volume(v), veh/h	112	0	0	141	0	0	7	311	316	49	330	345
Grp Sat Flow(s),veh/h/ln	1606	0	0	1504	0	0	1774	1770	1790	1774	1770	1850
Q Serve(g_s), s	0.0	0.0	0.0	1.4	0.0	0.0	0.4	7.7	7.7	2.4	0.0	0.0
Cycle Q Clear(g_c), s	5.2	0.0	0.0	6.6	0.0	0.0	0.4	7.7	7.7	2.4	0.0	0.0
Prop In Lane	0.18		0.46	0.50		0.37	1.00		0.18	1.00		0.03
Lane Grp Cap(c), veh/h	368	0	0	360	0	0	13	1063	1075	62	1113	1163
V/C Ratio(X)	0.30	0.00	0.00	0.39	0.00	0.00	0.55	0.29	0.29	0.79	0.30	0.30
Avail Cap(c_a), veh/h	595	0	0	565	0	0	110	1063	1075	189	1113	1163
HCM Platoon Ratio	1.00	1.00	1.00	1.00	1.00	1.00	1.00	1.00	1.00	2.00	2.00	2.00
Upstream Filter(I)	1.00	0.00	0.00	1.00	0.00	0.00	1.00	1.00	1.00	0.97	0.97	0.97
Uniform Delay (d), s/veh	30.9	0.0	0.0	31.4	0.0	0.0	44.5	8.7	8.7	41.5	0.0	0.0
Incr Delay (d2), s/veh	0.2	0.0	0.0	0.3	0.0	0.0	13.2	0.7	0.7	7.8	0.7	0.6
Initial Q Delay(d3),s/veh	0.0	0.0	0.0	0.0	0.0	0.0	0.0	0.0	0.0	0.0	0.0	0.0
%ile BackOfQ(50%),veh/ln	2.4	0.0	0.0	3.1	0.0	0.0	0.2	3.9	4.0	1.3	0.2	0.2
LnGrp Delay(d),s/veh	31.1	0.0	0.0	31.6	0.0	0.0	57.8	9.4	9.4	49.3	0.7	0.6
LnGrp LOS	C			C			E	A	A	D	A	A
Approach Vol, veh/h		112			141			634			724	
Approach Delay, s/veh		31.1			31.6			9.9			3.9	
Approach LOS		C			C			A			A	

Timer	1	2	3	4	5	6	7	8
Assigned Phs	1	2		4	5	6		8
Phs Duration (G+Y+Rc), s	7.6	59.6		22.9	5.0	62.1		22.9
Change Period (Y+Rc), s	4.4	* 5.5		4.9	4.4	5.5		4.9
Max Green Setting (Gmax), s	9.6	* 35		31.1	5.6	38.5		31.1
Max Q Clear Time (g_c+I1), s	4.4	9.7		7.2	2.4	2.0		8.6
Green Ext Time (p_c), s	0.0	13.9		1.0	0.0	17.0		1.0

Intersection Summary	
HCM 2010 Ctrl Delay	10.6
HCM 2010 LOS	B

Notes

* HCM 2010 computational engine requires equal clearance times for the phases crossing the barrier.

Movement	EBL	EBT	EBR	WBL	WBT	WBR	NBL	NBT	NBR	SBL	SBT	SBR
Lane Configurations												
Volume (veh/h)	93	90	90	33	53	32	67	450	28	59	501	36
Number	7	4	14	3	8	18	5	2	12	1	6	16
Initial Q (Qb), veh	0	0	0	0	0	0	0	0	0	0	0	0
Ped-Bike Adj(A_pbT)	0.99		0.97	0.99		0.97	1.00		0.96	1.00		0.95
Parking Bus, Adj	1.00	1.00	1.00	1.00	1.00	1.00	1.00	1.00	1.00	1.00	1.00	1.00
Adj Sat Flow, veh/h/ln	1863	1863	1900	1863	1863	1900	1863	1863	1900	1863	1863	1900
Adj Flow Rate, veh/h	104	101	101	37	60	36	75	506	31	66	563	40
Adj No. of Lanes	1	1	0	1	1	0	1	2	0	1	2	0
Peak Hour Factor	0.89	0.89	0.89	0.89	0.89	0.89	0.89	0.89	0.89	0.89	0.89	0.89
Percent Heavy Veh, %	2	2	2	2	2	2	2	2	2	2	2	2
Cap, veh/h	315	193	193	225	248	149	97	1896	116	84	1851	131
Arrive On Green	0.23	0.23	0.23	0.23	0.23	0.23	0.02	0.19	0.19	0.10	1.00	1.00
Sat Flow, veh/h	1276	840	840	1161	1077	646	1774	3378	206	1774	3340	237
Grp Volume(v), veh/h	104	0	202	37	0	96	75	264	273	66	298	305
Grp Sat Flow(s),veh/h/ln	1276	0	1679	1161	0	1723	1774	1770	1815	1774	1770	1807
Q Serve(g_s), s	6.5	0.0	9.5	2.6	0.0	4.1	3.8	11.5	11.6	3.3	0.0	0.0
Cycle Q Clear(g_c), s	10.6	0.0	9.5	12.1	0.0	4.1	3.8	11.5	11.6	3.3	0.0	0.0
Prop In Lane	1.00		0.50	1.00		0.38	1.00		0.11	1.00		0.13
Lane Grp Cap(c), veh/h	315	0	386	225	0	396	97	993	1019	84	981	1001
V/C Ratio(X)	0.33	0.00	0.52	0.16	0.00	0.24	0.77	0.27	0.27	0.78	0.30	0.30
Avail Cap(c_a), veh/h	491	0	618	385	0	634	209	993	1019	209	981	1001
HCM Platoon Ratio	1.00	1.00	1.00	1.00	1.00	1.00	0.33	0.33	0.33	2.00	2.00	2.00
Upstream Filter(I)	1.00	0.00	1.00	1.00	0.00	1.00	0.97	0.97	0.97	0.97	0.97	0.97
Uniform Delay (d), s/veh	32.6	0.0	30.3	35.6	0.0	28.3	43.6	20.8	20.8	40.3	0.0	0.0
Incr Delay (d2), s/veh	0.2	0.0	0.4	0.1	0.0	0.1	4.7	0.6	0.6	5.6	0.8	0.8
Initial Q Delay(d3),s/veh	0.0	0.0	0.0	0.0	0.0	0.0	0.0	0.0	0.0	0.0	0.0	0.0
%ile BackOfQ(50%),veh/ln	2.3	0.0	4.4	0.8	0.0	2.0	2.0	5.8	6.0	1.7	0.2	0.2
LnGrp Delay(d),s/veh	32.8	0.0	30.7	35.7	0.0	28.4	48.3	21.4	21.4	45.9	0.8	0.8
LnGrp LOS	C		C	D		C	D	C	C	D	A	A
Approach Vol, veh/h		306			133			612			669	
Approach Delay, s/veh		31.4			30.4			24.7			5.2	
Approach LOS		C			C			C			A	

Timer	1	2	3	4	5	6	7	8
Assigned Phs	1	2		4	5	6		8
Phs Duration (G+Y+Rc), s	8.7	55.7		25.6	9.3	55.1		25.6
Change Period (Y+Rc), s	4.4	5.2		4.9	4.4	* 5.2		4.9
Max Green Setting (Gmax), s	10.6	31.8		33.1	10.6	* 32		33.1
Max Q Clear Time (g_c+I1), s	5.3	13.6		12.6	5.8	2.0		14.1
Green Ext Time (p_c), s	0.0	7.4		1.4	0.0	9.1		1.4

Intersection Summary	
HCM 2010 Ctrl Delay	18.8
HCM 2010 LOS	B

Notes

* HCM 2010 computational engine requires equal clearance times for the phases crossing the barrier.

Movement	EBL	EBT	EBR	WBL	WBT	WBR	NBL	NBT	NBR	SBL	SBT	SBR
Lane Configurations												
Volume (veh/h)	116	93	43	41	110	231	50	545	38	146	514	34
Number	7	4	14	3	8	18	5	2	12	1	6	16
Initial Q (Qb), veh	0	0	0	0	0	0	0	0	0	0	0	0
Ped-Bike Adj(A_pbT)	0.96		0.97	0.99		0.92	1.00		0.97	1.00		0.97
Parking Bus, Adj	1.00	1.00	1.00	1.00	1.00	1.00	1.00	1.00	1.00	1.00	1.00	1.00
Adj Sat Flow, veh/h/ln	1863	1863	1900	1863	1863	1863	1863	1863	1900	1863	1863	1900
Adj Flow Rate, veh/h	127	102	47	45	121	254	55	599	42	160	565	37
Adj No. of Lanes	1	1	0	1	1	1	1	2	0	1	2	0
Peak Hour Factor	0.91	0.91	0.91	0.91	0.91	0.91	0.91	0.91	0.91	0.91	0.91	0.91
Percent Heavy Veh, %	2	2	2	2	2	2	2	2	2	2	2	2
Cap, veh/h	294	326	150	330	508	396	70	1539	108	195	1785	117
Arrive On Green	0.27	0.27	0.27	0.27	0.27	0.27	0.08	0.92	0.92	0.11	0.53	0.53
Sat Flow, veh/h	965	1197	552	1223	1863	1454	1774	3347	234	1774	3366	220
Grp Volume(v), veh/h	127	0	149	45	121	254	55	316	325	160	297	305
Grp Sat Flow(s),veh/h/ln	965	0	1748	1223	1863	1454	1774	1770	1812	1774	1770	1816
Q Serve(g_s), s	10.6	0.0	6.1	2.7	4.5	13.9	2.7	2.0	2.0	7.9	8.5	8.5
Cycle Q Clear(g_c), s	15.2	0.0	6.1	8.8	4.5	13.9	2.7	2.0	2.0	7.9	8.5	8.5
Prop In Lane	1.00		0.32	1.00		1.00	1.00		0.13	1.00		0.12
Lane Grp Cap(c), veh/h	294	0	476	330	508	396	70	814	833	195	938	963
V/C Ratio(X)	0.43	0.00	0.31	0.14	0.24	0.64	0.79	0.39	0.39	0.82	0.32	0.32
Avail Cap(c_a), veh/h	354	0	585	406	623	486	150	814	833	347	938	963
HCM Platoon Ratio	1.00	1.00	1.00	1.00	1.00	1.00	2.00	2.00	2.00	1.00	1.00	1.00
Upstream Filter(I)	1.00	0.00	1.00	1.00	1.00	1.00	0.97	0.97	0.97	0.59	0.59	0.59
Uniform Delay (d), s/veh	31.4	0.0	26.0	29.5	25.5	28.9	41.1	2.0	2.0	39.2	11.9	11.9
Incr Delay (d2), s/veh	0.4	0.0	0.1	0.1	0.1	1.0	6.8	1.4	1.3	2.0	0.5	0.5
Initial Q Delay(d3),s/veh	0.0	0.0	0.0	0.0	0.0	0.0	0.0	0.0	0.0	0.0	0.0	0.0
%ile BackOfQ(50%),veh/ln	2.9	0.0	3.0	0.9	2.3	5.6	1.5	1.2	1.2	4.0	4.3	4.4
LnGrp Delay(d),s/veh	31.7	0.0	26.2	29.6	25.6	29.8	47.9	3.4	3.4	41.2	12.4	12.4
LnGrp LOS	C		C	C	C	C	D	A	A	D	B	B
Approach Vol, veh/h		276			420			696			762	
Approach Delay, s/veh		28.7			28.6			6.9			18.5	
Approach LOS		C			C			A			B	

Timer	1	2	3	4	5	6	7	8
Assigned Phs	1	2		4	5	6		8
Phs Duration (G+Y+Rc), s	14.3	46.3		29.4	7.9	52.6		29.4
Change Period (Y+Rc), s	4.4	4.9		4.9	4.4	4.9		4.9
Max Green Setting (Gmax), s	17.6	28.1		30.1	7.6	38.1		30.1
Max Q Clear Time (g_c+I1), s	19.9	4.0		17.2	4.7	10.5		15.9
Green Ext Time (p_c), s	0.1	17.2		1.8	0.0	19.1		1.9

Intersection Summary	
HCM 2010 Ctrl Delay	18.0
HCM 2010 LOS	B

Movement	EBL	EBT	EBR	WBL	WBT	WBR	NBL	NBT	NBR	SBL	SBT	SBR
Lane Configurations												
Volume (veh/h)	130	438	210	368	484	192	240	577	376	99	464	103
Number	5	2	12	1	6	16	3	8	18	7	4	14
Initial Q (Qb), veh	0	0	0	0	0	0	0	0	0	0	0	0
Ped-Bike Adj(A_pbT)	1.00		0.97	1.00		0.98	1.00		0.96	1.00		0.88
Parking Bus, Adj	1.00	1.00	1.00	1.00	1.00	1.00	1.00	1.00	1.00	1.00	1.00	1.00
Adj Sat Flow, veh/h/ln	1863	1863	1900	1863	1863	1863	1863	1863	1900	1863	1863	1900
Adj Flow Rate, veh/h	141	476	228	400	526	209	261	627	409	108	504	112
Adj No. of Lanes	1	2	0	2	2	1	1	2	0	2	2	0
Peak Hour Factor	0.92	0.92	0.92	0.92	0.92	0.92	0.92	0.92	0.92	0.92	0.92	0.92
Percent Heavy Veh, %	2	2	2	2	2	2	2	2	2	2	2	2
Cap, veh/h	166	633	301	433	1085	477	286	805	525	159	794	175
Arrive On Green	0.09	0.27	0.27	0.13	0.31	0.31	0.16	0.40	0.40	0.05	0.28	0.28
Sat Flow, veh/h	1774	2307	1097	3442	3539	1554	1774	2023	1319	3442	2804	617
Grp Volume(v), veh/h	141	364	340	400	526	209	261	549	487	108	316	300
Grp Sat Flow(s),veh/h/ln	1774	1770	1634	1721	1770	1554	1774	1770	1571	1721	1770	1652
Q Serve(g_s), s	9.7	23.3	23.6	14.3	15.0	13.4	17.9	33.5	33.6	3.8	19.3	19.7
Cycle Q Clear(g_c), s	9.7	23.3	23.6	14.3	15.0	13.4	17.9	33.5	33.6	3.8	19.3	19.7
Prop In Lane	1.00		0.67	1.00		1.00	1.00		0.84	1.00		0.37
Lane Grp Cap(c), veh/h	166	486	448	433	1085	477	286	704	625	159	501	468
V/C Ratio(X)	0.85	0.75	0.76	0.92	0.48	0.44	0.91	0.78	0.78	0.68	0.63	0.64
Avail Cap(c_a), veh/h	166	486	448	433	1085	477	295	704	625	230	501	468
HCM Platoon Ratio	1.00	1.00	1.00	1.00	1.00	1.00	1.00	1.00	1.00	1.00	1.00	1.00
Upstream Filter(I)	1.00	1.00	1.00	1.00	1.00	1.00	0.91	0.91	0.91	1.00	1.00	1.00
Uniform Delay (d), s/veh	55.3	41.1	41.2	53.6	35.0	34.4	51.2	32.6	32.6	58.2	38.8	38.9
Incr Delay (d2), s/veh	30.5	10.2	11.4	25.0	1.5	2.9	27.7	7.6	8.5	1.9	5.9	6.6
Initial Q Delay(d3),s/veh	0.0	0.0	0.0	0.0	0.0	0.0	0.0	0.0	0.0	0.0	0.0	0.0
%ile BackOfQ(50%),veh/ln	6.2	12.8	12.1	8.3	7.5	6.1	11.0	17.8	16.0	1.9	10.3	9.9
LnGrp Delay(d),s/veh	85.9	51.3	52.6	78.7	36.6	37.3	78.9	40.1	41.1	60.1	44.7	45.5
LnGrp LOS	F	D	D	E	D	D	E	D	D	E	D	D
Approach Vol, veh/h		845			1135			1297			724	
Approach Delay, s/veh		57.6			51.5			48.3			47.4	
Approach LOS		E			D			D			D	

Timer	1	2	3	4	5	6	7	8
Assigned Phs	1	2	3	4	5	6	7	8
Phs Duration (G+Y+Rc), s	20.0	39.3	24.4	40.3	16.0	43.3	10.1	54.5
Change Period (Y+Rc), s	4.4	5.3	4.4	5.2	4.4	5.3	4.4	* 5.2
Max Green Setting (Gmax), s	15.6	33.4	20.6	35.1	11.6	37.4	8.3	* 48
Max Q Clear Time (g_c+I1), s	11.3	25.6	19.9	21.7	11.7	17.0	5.8	35.6
Green Ext Time (p_c), s	0.0	6.1	0.0	11.2	0.0	13.0	0.0	10.3

Intersection Summary	
HCM 2010 Ctrl Delay	51.0
HCM 2010 LOS	D

Notes

* HCM 2010 computational engine requires equal clearance times for the phases crossing the barrier.

Movement	WBL	WBR	NBT	NBR	SBL	SBT
Lane Configurations						
Volume (veh/h)	245	156	1268	387	147	644
Number	3	18	2	12	1	6
Initial Q (Qb), veh	0	0	0	0	0	0
Ped-Bike Adj(A_pbT)	1.00	1.00		0.98	1.00	
Parking Bus, Adj	1.00	1.00	1.00	1.00	1.00	1.00
Adj Sat Flow, veh/h/ln	1863	1863	1863	1863	1863	1863
Adj Flow Rate, veh/h	292	147	1393	425	162	708
Adj No. of Lanes	2	1	2	1	2	2
Peak Hour Factor	0.91	0.91	0.91	0.91	0.91	0.91
Percent Heavy Veh, %	2	2	2	2	2	2
Cap, veh/h	444	198	2067	1101	255	2530
Arrive On Green	0.13	0.13	0.58	0.58	0.07	0.71
Sat Flow, veh/h	3548	1583	3632	1546	3442	3632
Grp Volume(v), veh/h	292	147	1393	425	162	708
Grp Sat Flow(s),veh/h/ln	1774	1583	1770	1546	1721	1770
Q Serve(g_s), s	6.1	6.9	20.9	8.5	3.5	5.5
Cycle Q Clear(g_c), s	6.1	6.9	20.9	8.5	3.5	5.5
Prop In Lane	1.00	1.00		1.00	1.00	
Lane Grp Cap(c), veh/h	444	198	2067	1101	255	2530
V/C Ratio(X)	0.66	0.74	0.67	0.39	0.64	0.28
Avail Cap(c_a), veh/h	1236	552	2067	1101	711	3033
HCM Platoon Ratio	1.00	1.00	1.00	1.00	1.00	1.00
Upstream Filter(I)	1.00	1.00	1.00	1.00	1.00	1.00
Uniform Delay (d), s/veh	32.3	32.7	11.1	4.5	34.9	3.9
Incr Delay (d2), s/veh	0.6	2.1	1.0	0.3	1.0	0.1
Initial Q Delay(d3),s/veh	0.0	0.0	0.0	0.0	0.0	0.0
%ile BackOfQ(50%),veh/ln	3.0	3.1	10.3	5.3	1.7	2.7
LnGrp Delay(d),s/veh	32.9	34.7	12.0	4.8	35.8	4.1
LnGrp LOS	C	C	B	A	D	A
Approach Vol, veh/h	439		1818			870
Approach Delay, s/veh	33.5		10.4			10.0
Approach LOS	C		B			A

Timer	1	2	3	4	5	6	7	8
Assigned Phs	1	2				6		8
Phs Duration (G+Y+Rc), s	10.1	51.4				61.6		15.9
Change Period (Y+Rc), s	4.4	6.2				* 6.2		6.2
Max Green Setting (Gmax), s	15.6	45.2				* 66		27.0
Max Q Clear Time (g_c+I1), s	5.5	22.9				7.5		8.9
Green Ext Time (p_c), s	0.2	20.4				47.9		0.8

Intersection Summary	
HCM 2010 Ctrl Delay	13.5
HCM 2010 LOS	B

Notes

User approved volume balancing among the lanes for turning movement.

Movement	EBL	EBT	WBT	WBR	SBL	SBR
Lane Configurations						
Volume (veh/h)	285	340	285	347	192	35
Number	5	2	6	16	7	14
Initial Q (Qb), veh	0	0	0	0	0	0
Ped-Bike Adj(A_pbT)	1.00			1.00	1.00	1.00
Parking Bus, Adj	1.00	1.00	1.00	1.00	1.00	1.00
Adj Sat Flow, veh/h/ln	1863	1863	1863	1863	1863	1863
Adj Flow Rate, veh/h	365	436	365	445	246	45
Adj No. of Lanes	1	2	2	1	2	1
Peak Hour Factor	0.78	0.78	0.78	0.78	0.78	0.78
Percent Heavy Veh, %	2	2	2	2	2	2
Cap, veh/h	424	2462	1355	798	430	192
Arrive On Green	0.24	0.70	0.38	0.38	0.12	0.12
Sat Flow, veh/h	1774	3632	3632	1583	3548	1583
Grp Volume(v), veh/h	365	436	365	445	246	45
Grp Sat Flow(s),veh/h/ln	1774	1770	1770	1583	1774	1583
Q Serve(g_s), s	11.7	2.5	4.2	11.5	3.9	1.5
Cycle Q Clear(g_c), s	11.7	2.5	4.2	11.5	3.9	1.5
Prop In Lane	1.00			1.00	1.00	1.00
Lane Grp Cap(c), veh/h	424	2462	1355	798	430	192
V/C Ratio(X)	0.86	0.18	0.27	0.56	0.57	0.23
Avail Cap(c_a), veh/h	913	3808	1749	975	901	402
HCM Platoon Ratio	1.00	1.00	1.00	1.00	1.00	1.00
Upstream Filter(I)	1.00	1.00	1.00	1.00	1.00	1.00
Uniform Delay (d), s/veh	21.7	3.1	12.6	10.2	24.7	23.6
Incr Delay (d2), s/veh	2.1	0.1	0.2	0.9	2.6	1.3
Initial Q Delay(d3),s/veh	0.0	0.0	0.0	0.0	0.0	0.0
%ile BackOfQ(50%),veh/ln	5.9	1.2	2.1	6.4	2.1	1.5
LnGrp Delay(d),s/veh	23.8	3.2	12.8	11.1	27.2	25.0
LnGrp LOS	C	A	B	B	C	C
Approach Vol, veh/h		801	810		291	
Approach Delay, s/veh		12.6	11.9		26.9	
Approach LOS		B	B		C	

Timer	1	2	3	4	5	6	7	8
Assigned Phs		2		4	5	6		
Phs Duration (G+Y+Rc), s		47.4		12.1	18.6	28.8		
Change Period (Y+Rc), s		6.0		4.9	4.4	* 6		
Max Green Setting (Gmax), s		64.0		15.1	30.6	* 29		
Max Q Clear Time (g_c+I1), s		4.5		5.9	13.7	13.5		
Green Ext Time (p_c), s		16.7		1.4	0.5	9.2		

Intersection Summary	
HCM 2010 Ctrl Delay	14.5
HCM 2010 LOS	B

Notes

User approved volume balancing among the lanes for turning movement.

Movement	EBL	EBT	EBR	WBL	WBT	WBR	NBL	NBT	NBR	SBL	SBT	SBR
Lane Configurations												
Volume (veh/h)	45	405	5	8	694	52	40	3	48	60	4	34
Number	5	2	12	1	6	16	3	8	18	7	4	14
Initial Q (Qb), veh	0	0	0	0	0	0	0	0	0	0	0	0
Ped-Bike Adj(A_pbT)	1.00		1.00	1.00		1.00	1.00		1.00	1.00		1.00
Parking Bus, Adj	1.00	1.00	1.00	1.00	1.00	1.00	1.00	1.00	1.00	1.00	1.00	1.00
Adj Sat Flow, veh/h/ln	1863	1863	1900	1863	1863	1900	1900	1863	1863	1863	1863	1900
Adj Flow Rate, veh/h	53	476	6	9	816	61	47	4	56	71	5	40
Adj No. of Lanes	1	2	0	1	2	0	0	1	1	1	1	0
Peak Hour Factor	0.85	0.85	0.85	0.85	0.85	0.85	0.85	0.85	0.85	0.85	0.85	0.85
Percent Heavy Veh, %	2	2	2	2	2	2	2	2	2	2	2	2
Cap, veh/h	67	2193	28	16	1949	146	257	18	226	229	26	204
Arrive On Green	0.04	0.61	0.61	0.01	0.58	0.58	0.14	0.14	0.14	0.14	0.14	0.14
Sat Flow, veh/h	1774	3579	45	1774	3339	250	1057	124	1583	1337	179	1431
Grp Volume(v), veh/h	53	235	247	9	432	445	51	0	56	71	0	45
Grp Sat Flow(s),veh/h/ln	1774	1770	1855	1774	1770	1819	1182	0	1583	1337	0	1610
Q Serve(g_s), s	1.9	3.9	3.9	0.3	8.7	8.7	2.0	0.0	2.0	3.3	0.0	1.6
Cycle Q Clear(g_c), s	1.9	3.9	3.9	0.3	8.7	8.7	3.5	0.0	2.0	6.9	0.0	1.6
Prop In Lane	1.00		0.02	1.00		0.14	0.92		1.00	1.00		0.89
Lane Grp Cap(c), veh/h	67	1084	1136	16	1033	1062	275	0	226	229	0	230
V/C Ratio(X)	0.79	0.22	0.22	0.55	0.42	0.42	0.19	0.00	0.25	0.31	0.00	0.20
Avail Cap(c_a), veh/h	317	1533	1607	153	1362	1400	783	0	807	719	0	820
HCM Platoon Ratio	1.00	1.00	1.00	1.00	1.00	1.00	1.00	1.00	1.00	1.00	1.00	1.00
Upstream Filter(I)	1.00	1.00	1.00	1.00	1.00	1.00	1.00	0.00	1.00	1.00	0.00	1.00
Uniform Delay (d), s/veh	31.0	5.6	5.6	32.1	7.4	7.4	25.9	0.0	24.8	28.5	0.0	24.6
Incr Delay (d2), s/veh	7.4	0.4	0.4	10.2	1.2	1.2	0.1	0.0	0.2	0.3	0.0	0.2
Initial Q Delay(d3),s/veh	0.0	0.0	0.0	0.0	0.0	0.0	0.0	0.0	0.0	0.0	0.0	0.0
%ile BackOfQ(50%),veh/ln	1.1	1.9	2.0	0.2	4.6	4.7	0.8	0.0	0.9	1.2	0.0	0.7
LnGrp Delay(d),s/veh	38.4	6.0	6.0	42.3	8.7	8.6	26.0	0.0	25.0	28.8	0.0	24.7
LnGrp LOS	D	A	A	D	A	A	C		C	C		C
Approach Vol, veh/h		535			886			107			116	
Approach Delay, s/veh		9.2			9.0			25.5			27.2	
Approach LOS		A			A			C			C	

Timer	1	2	3	4	5	6	7	8
Assigned Phs	1	2		4	5	6		8
Phs Duration (G+Y+Rc), s	5.0	45.8		14.2	6.9	43.9		14.2
Change Period (Y+Rc), s	4.4	* 6		4.9	4.4	6.0		4.9
Max Green Setting (Gmax), s	5.6	* 56		33.1	11.6	50.0		33.1
Max Q Clear Time (g_c+I1), s	2.3	5.9		8.9	3.9	10.7		5.5
Green Ext Time (p_c), s	0.0	32.2		0.5	0.0	27.2		0.5

Intersection Summary	
HCM 2010 Ctrl Delay	11.4
HCM 2010 LOS	B

Notes

* HCM 2010 computational engine requires equal clearance times for the phases crossing the barrier.

Movement	EBL	EBT	WBT	WBR	SBL	SBR
Lane Configurations						
Volume (veh/h)	174	386	651	377	172	110
Number	5	2	6	16	7	14
Initial Q (Qb), veh	0	0	0	0	0	0
Ped-Bike Adj(A_pbT)	1.00			0.97	1.00	1.00
Parking Bus, Adj	1.00	1.00	1.00	1.00	1.00	1.00
Adj Sat Flow, veh/h/ln	1863	1863	1863	1863	1863	1863
Adj Flow Rate, veh/h	198	439	740	428	195	125
Adj No. of Lanes	1	2	2	1	1	1
Peak Hour Factor	0.88	0.88	0.88	0.88	0.88	0.88
Percent Heavy Veh, %	2	2	2	2	2	2
Cap, veh/h	268	2254	1402	610	287	256
Arrive On Green	0.15	0.64	0.40	0.40	0.16	0.16
Sat Flow, veh/h	1774	3632	3632	1540	1774	1583
Grp Volume(v), veh/h	198	439	740	428	195	125
Grp Sat Flow(s),veh/h/ln	1774	1770	1770	1540	1774	1583
Q Serve(g_s), s	5.2	2.5	7.9	11.4	5.1	3.5
Cycle Q Clear(g_c), s	5.2	2.5	7.9	11.4	5.1	3.5
Prop In Lane	1.00			1.00	1.00	1.00
Lane Grp Cap(c), veh/h	268	2254	1402	610	287	256
V/C Ratio(X)	0.74	0.19	0.53	0.70	0.68	0.49
Avail Cap(c_a), veh/h	707	4042	2302	1001	1229	1097
HCM Platoon Ratio	1.00	1.00	1.00	1.00	1.00	1.00
Upstream Filter(I)	1.00	1.00	1.00	1.00	1.00	1.00
Uniform Delay (d), s/veh	20.0	3.7	11.3	12.4	19.4	18.8
Incr Delay (d2), s/veh	1.5	0.0	0.1	0.6	2.8	1.4
Initial Q Delay(d3),s/veh	0.0	0.0	0.0	0.0	0.0	0.0
%ile BackOfQ(50%),veh/ln	2.6	1.2	3.8	9.5	2.7	3.2
LnGrp Delay(d),s/veh	21.4	3.7	11.5	13.0	22.2	20.2
LnGrp LOS	C	A	B	B	C	C
Approach Vol, veh/h		637	1168		320	
Approach Delay, s/veh		9.2	12.0		21.4	
Approach LOS		A	B		C	

Timer	1	2	3	4	5	6	7	8
Assigned Phs		2		4	5	6		
Phs Duration (G+Y+Rc), s		37.2		12.0	11.8	25.4		
Change Period (Y+Rc), s		* 5.9		4.0	4.4	5.9		
Max Green Setting (Gmax), s		* 56		34.1	19.6	32.0		
Max Q Clear Time (g_c+I1), s		4.5		7.1	7.2	13.4		
Green Ext Time (p_c), s		6.9		1.0	0.2	5.9		

Intersection Summary	
HCM 2010 Ctrl Delay	12.6
HCM 2010 LOS	B

Notes

* HCM 2010 computational engine requires equal clearance times for the phases crossing the barrier.

Movement	EBL	EBT	EBR	WBL	WBT	WBR	NBL	NBT	NBR	SBL	SBT	SBR
Lane Configurations												
Volume (veh/h)	0	624	101	153	1023	2	159	2	73	20	1	7
Number	5	2	12	1	6	16	3	8	18	7	4	14
Initial Q (Qb), veh	0	0	0	0	0	0	0	0	0	0	0	0
Ped-Bike Adj(A_pbT)	1.00		0.99	1.00		0.97	1.00		0.98	1.00		1.00
Parking Bus, Adj	1.00	1.00	1.00	1.00	1.00	1.00	1.00	1.00	1.00	1.00	1.00	1.00
Adj Sat Flow, veh/h/ln	1863	1863	1900	1863	1863	1900	1900	1863	1863	1900	1863	1900
Adj Flow Rate, veh/h	0	657	106	161	1077	2	167	2	77	21	1	7
Adj No. of Lanes	1	3	0	2	2	0	0	1	1	0	1	0
Peak Hour Factor	0.95	0.95	0.95	0.95	0.95	0.95	0.95	0.95	0.95	0.95	0.95	0.95
Percent Heavy Veh, %	2	2	2	2	2	2	2	2	2	2	2	2
Cap, veh/h	2	2783	443	221	2660	5	293	3	365	107	12	20
Arrive On Green	0.00	0.63	0.63	0.13	1.00	1.00	0.17	0.17	0.17	0.17	0.17	0.17
Sat Flow, veh/h	1774	4415	703	3442	3624	7	1352	16	1549	304	69	119
Grp Volume(v), veh/h	0	503	260	161	526	553	169	0	77	29	0	0
Grp Sat Flow(s),veh/h/ln	1774	1695	1728	1721	1770	1861	1369	0	1549	491	0	0
Q Serve(g_s), s	0.0	7.2	7.3	5.0	0.0	0.0	0.0	0.0	4.5	1.3	0.0	0.0
Cycle Q Clear(g_c), s	0.0	7.2	7.3	5.0	0.0	0.0	13.2	0.0	4.5	14.5	0.0	0.0
Prop In Lane	1.00		0.41	1.00		0.00	0.99		1.00	0.72		0.24
Lane Grp Cap(c), veh/h	2	2137	1089	221	1299	1366	296	0	365	139	0	0
V/C Ratio(X)	0.00	0.24	0.24	0.73	0.40	0.40	0.57	0.00	0.21	0.21	0.00	0.00
Avail Cap(c_a), veh/h	63	2137	1089	664	1299	1366	535	0	629	374	0	0
HCM Platoon Ratio	1.00	1.00	1.00	2.00	2.00	2.00	1.00	1.00	1.00	1.00	1.00	1.00
Upstream Filter(I)	0.00	0.97	0.97	0.91	0.91	0.91	1.00	0.00	1.00	1.00	0.00	0.00
Uniform Delay (d), s/veh	0.0	9.0	9.0	47.9	0.0	0.0	44.1	0.0	34.6	45.3	0.0	0.0
Incr Delay (d2), s/veh	0.0	0.3	0.5	1.6	0.9	0.8	0.9	0.0	0.2	0.4	0.0	0.0
Initial Q Delay(d3),s/veh	0.0	0.0	0.0	0.0	0.0	0.0	0.0	0.0	0.0	0.0	0.0	0.0
%ile BackOfQ(50%),veh/ln	0.0	3.4	3.6	2.4	0.3	0.3	5.1	0.0	1.9	0.9	0.0	0.0
LnGrp Delay(d),s/veh	0.0	9.2	9.5	49.4	0.9	0.8	45.0	0.0	34.7	45.7	0.0	0.0
LnGrp LOS		A	A	D	A	A	D		C	D		
Approach Vol, veh/h		763			1240			246			29	
Approach Delay, s/veh		9.3			7.1			41.8			45.7	
Approach LOS		A			A			D			D	

Timer	1	2	3	4	5	6	7	8
Assigned Phs	1	2		4	5	6		8
Phs Duration (G+Y+Rc), s	11.6	76.5		23.9	0.0	88.1		23.9
Change Period (Y+Rc), s	4.4	5.9		4.9	4.4	* 5.9		4.9
Max Green Setting (Gmax), s	21.6	37.1		38.1	4.0	* 55		38.1
Max Q Clear Time (g_c+I1), s	7.0	9.3		16.5	0.0	2.0		15.2
Green Ext Time (p_c), s	0.2	15.4		0.9	0.0	20.5		0.9

Intersection Summary	
HCM 2010 Ctrl Delay	12.1
HCM 2010 LOS	B

Notes

* HCM 2010 computational engine requires equal clearance times for the phases crossing the barrier.

Movement	EBL	EBT	EBR	WBL	WBT	WBR	NBL	NBT	NBR	SBL	SBT	SBR
Lane Configurations												
Volume (veh/h)	8	709	8	36	1049	0	4	0	15	0	0	0
Number	5	2	12	1	6	16	3	8	18			
Initial Q (Qb), veh	0	0	0	0	0	0	0	0	0			
Ped-Bike Adj(A_pbT)	1.00		1.00	1.00		1.00	1.00		1.00			
Parking Bus, Adj	1.00	1.00	1.00	1.00	1.00	1.00	1.00	1.00	1.00			
Adj Sat Flow, veh/h/ln	1863	1863	1900	1863	1863	0	1863	0	1863			
Adj Flow Rate, veh/h	9	854	10	43	1264	0	5	0	18			
Adj No. of Lanes	1	3	0	2	2	0	1	0	1			
Peak Hour Factor	0.92	0.83	0.83	0.83	0.83	0.92	0.83	0.92	0.83			
Percent Heavy Veh, %	2	2	2	2	2	0	2	0	2			
Cap, veh/h	15	4293	50	91	3008	0	32	0	29			
Arrive On Green	0.00	0.27	0.27	0.03	0.85	0.00	0.02	0.00	0.02			
Sat Flow, veh/h	1774	5181	61	3442	3632	0	1774	0	1583			
Grp Volume(v), veh/h	9	559	305	43	1264	0	5	0	18			
Grp Sat Flow(s),veh/h/ln	1774	1695	1852	1721	1770	0	1774	0	1583			
Q Serve(g_s), s	0.6	14.2	14.2	1.4	9.3	0.0	0.3	0.0	1.3			
Cycle Q Clear(g_c), s	0.6	14.2	14.2	1.4	9.3	0.0	0.3	0.0	1.3			
Prop In Lane	1.00		0.03	1.00		0.00	1.00		1.00			
Lane Grp Cap(c), veh/h	15	2809	1534	91	3008	0	32	0	29			
V/C Ratio(X)	0.58	0.20	0.20	0.47	0.42	0.00	0.15	0.00	0.62			
Avail Cap(c_a), veh/h	63	2809	1534	172	3008	0	491	0	438			
HCM Platoon Ratio	0.33	0.33	0.33	1.00	1.00	1.00	1.00	1.00	1.00			
Upstream Filter(I)	0.98	0.98	0.98	1.00	1.00	0.00	1.00	0.00	1.00			
Uniform Delay (d), s/veh	55.6	12.1	12.1	53.8	2.0	0.0	54.1	0.0	54.6			
Incr Delay (d2), s/veh	29.5	0.2	0.3	1.4	0.4	0.0	0.8	0.0	7.9			
Initial Q Delay(d3),s/veh	0.0	0.0	0.0	0.0	0.0	0.0	0.0	0.0	0.0			
%ile BackOfQ(50%),veh/ln	0.4	6.7	7.4	0.7	4.6	0.0	0.2	0.0	0.6			
LnGrp Delay(d),s/veh	85.2	12.3	12.4	55.2	2.4	0.0	54.9	0.0	62.5			
LnGrp LOS	F	B	B	E	A		D		E			
Approach Vol, veh/h		873			1307			23				
Approach Delay, s/veh		13.1			4.1			60.8				
Approach LOS		B			A			E				

Timer	1	2	3	4	5	6	7	8
Assigned Phs	1	2			5	6		8
Phs Duration (G+Y+Rc), s	7.4	98.2			5.0	100.6		6.4
Change Period (Y+Rc), s	4.4	5.4			4.0	* 5.4		4.4
Max Green Setting (Gmax), s	5.6	61.2			4.0	* 63		31.0
Max Q Clear Time (g_c+I1), s	3.4	16.2			2.6	11.3		3.3
Green Ext Time (p_c), s	0.0	27.7			0.0	30.1		0.0

Intersection Summary	
HCM 2010 Ctrl Delay	8.3
HCM 2010 LOS	A

Notes

* HCM 2010 computational engine requires equal clearance times for the phases crossing the barrier.

Movement	EBL	EBT	EBR	WBL	WBT	WBR	NBL	NBT	NBR	SBL	SBT	SBR
Lane Configurations												
Volume (veh/h)	2	664	8	197	1081	1	3	0	19	28	0	1
Number	5	2	12	1	6	16	3	8	18	7	4	14
Initial Q (Qb), veh	0	0	0	0	0	0	0	0	0	0	0	0
Ped-Bike Adj(A_pbT)	1.00		1.00	1.00		1.00	0.98		1.00	1.00		0.98
Parking Bus, Adj	1.00	1.00	1.00	1.00	1.00	1.00	1.00	1.00	1.00	1.00	1.00	1.00
Adj Sat Flow, veh/h/ln	1863	1863	1900	1863	1863	1900	1863	1863	1863	1863	1863	1900
Adj Flow Rate, veh/h	2	692	8	205	1126	1	3	0	20	29	0	1
Adj No. of Lanes	1	3	0	2	3	0	1	0	2	1	1	0
Peak Hour Factor	0.96	0.96	0.96	0.96	0.96	0.96	0.96	0.96	0.96	0.96	0.96	0.96
Percent Heavy Veh, %	2	2	2	2	2	2	2	2	2	2	2	2
Cap, veh/h	4	3876	45	270	4325	4	122	0	134	123	0	66
Arrive On Green	0.00	0.75	0.75	0.08	0.82	0.82	0.04	0.00	0.04	0.04	0.00	0.04
Sat Flow, veh/h	1774	5182	60	3442	5247	5	1381	0	3167	1386	0	1550
Grp Volume(v), veh/h	2	452	248	205	727	400	3	0	20	29	0	1
Grp Sat Flow(s),veh/h/ln	1774	1695	1852	1721	1695	1862	1381	0	1583	1386	0	1550
Q Serve(g_s), s	0.1	4.3	4.4	6.5	5.4	5.4	0.2	0.0	0.7	2.3	0.0	0.1
Cycle Q Clear(g_c), s	0.1	4.3	4.4	6.5	5.4	5.4	0.3	0.0	0.7	2.3	0.0	0.1
Prop In Lane	1.00		0.03	1.00		0.00	1.00		1.00	1.00		1.00
Lane Grp Cap(c), veh/h	4	2535	1385	270	2794	1535	122	0	134	123	0	66
V/C Ratio(X)	0.52	0.18	0.18	0.76	0.26	0.26	0.02	0.00	0.15	0.24	0.00	0.02
Avail Cap(c_a), veh/h	184	2535	1385	633	2794	1535	447	0	879	449	0	430
HCM Platoon Ratio	1.00	1.00	1.00	1.00	1.00	1.00	1.00	1.00	1.00	1.00	1.00	1.00
Upstream Filter(I)	1.00	1.00	1.00	0.82	0.82	0.82	1.00	0.00	1.00	1.00	0.00	1.00
Uniform Delay (d), s/veh	55.8	4.1	4.1	50.6	2.2	2.2	51.5	0.0	51.7	52.4	0.0	51.4
Incr Delay (d2), s/veh	35.6	0.2	0.3	1.4	0.2	0.3	0.0	0.0	0.2	0.4	0.0	0.0
Initial Q Delay(d3),s/veh	0.0	0.0	0.0	0.0	0.0	0.0	0.0	0.0	0.0	0.0	0.0	0.0
%ile BackOfQ(50%),veh/ln	0.1	2.1	2.3	3.2	2.5	2.8	0.1	0.0	0.3	0.9	0.0	0.0
LnGrp Delay(d),s/veh	91.4	4.3	4.4	51.9	2.4	2.5	51.6	0.0	51.9	52.8	0.0	51.4
LnGrp LOS	F	A	A	D	A	A	D		D	D		D
Approach Vol, veh/h		702			1332			23			30	
Approach Delay, s/veh		4.6			10.1			51.8			52.8	
Approach LOS		A			B			D			D	

Timer	1	2	3	4	5	6	7	8
Assigned Phs	1	2		4	5	6		8
Phs Duration (G+Y+Rc), s	13.2	89.2		9.7	4.6	97.7		9.7
Change Period (Y+Rc), s	4.4	5.4		4.9	4.4	* 5.4		4.9
Max Green Setting (Gmax), s	20.6	45.6		31.1	11.6	* 55		31.1
Max Q Clear Time (g_c+I1), s	8.5	6.4		4.3	2.1	7.4		2.7
Green Ext Time (p_c), s	0.3	20.0		0.1	0.0	21.8		0.1

Intersection Summary	
HCM 2010 Ctrl Delay	9.3
HCM 2010 LOS	A

Notes

User approved volume balancing among the lanes for turning movement.

Movement	EBL	EBT	EBR	WBL	WBT	WBR	NBL	NBT	NBR	SBL	SBT	SBR
Lane Configurations												
Volume (veh/h)	36	478	286	0	899	449	282	48	746	298	5	98
Number	5	2	12	1	6	16	3	8	18	7	4	14
Initial Q (Qb), veh	0	0	0	0	0	0	0	0	0	0	0	0
Ped-Bike Adj(A_pbT)	1.00		1.00	1.00		1.00	1.00		1.00	1.00		0.98
Parking Bus, Adj	1.00	1.00	1.00	1.00	1.00	1.00	1.00	1.00	1.00	1.00	1.00	1.00
Adj Sat Flow, veh/h/ln	1863	1863	1863	0	1863	1863	1863	1863	1863	1863	1900	1863
Adj Flow Rate, veh/h	40	525	0	0	988	493	348	0	0	327	5	108
Adj No. of Lanes	1	3	1	0	3	1	2	0	1	2	0	1
Peak Hour Factor	0.91	0.91	0.91	0.91	0.91	0.91	0.91	0.91	0.91	0.91	0.91	0.91
Percent Heavy Veh, %	2	2	2	0	2	2	2	2	2	2	2	2
Cap, veh/h	140	2043	636	0	1489	464	414	0	185	405	0	183
Arrive On Green	0.08	0.40	0.00	0.00	0.29	0.29	0.12	0.00	0.00	0.12	0.12	0.12
Sat Flow, veh/h	1774	5085	1583	0	5253	1583	3548	0	1583	3442	0	1552
Grp Volume(v), veh/h	40	525	0	0	988	493	348	0	0	327	0	108
Grp Sat Flow(s),veh/h/ln	1774	1695	1583	0	1695	1583	1774	0	1583	1721	0	1552
Q Serve(g_s), s	3.0	9.6	0.0	0.0	23.9	41.0	13.4	0.0	0.0	13.0	0.0	9.2
Cycle Q Clear(g_c), s	3.0	9.6	0.0	0.0	23.9	41.0	13.4	0.0	0.0	13.0	0.0	9.2
Prop In Lane	1.00		1.00	0.00		1.00	1.00		1.00	1.00		1.00
Lane Grp Cap(c), veh/h	140	2043	636	0	1489	464	414	0	185	405	0	183
V/C Ratio(X)	0.29	0.26	0.00	0.00	0.66	1.06	0.84	0.00	0.00	0.81	0.00	0.59
Avail Cap(c_a), veh/h	190	2187	681	0	1489	464	644	0	287	939	0	424
HCM Platoon Ratio	1.00	1.00	1.00	1.00	1.00	1.00	1.00	1.00	1.00	1.00	1.00	1.00
Upstream Filter(I)	0.99	0.99	0.00	0.00	0.79	0.79	1.00	0.00	0.00	1.00	0.00	1.00
Uniform Delay (d), s/veh	60.8	27.9	0.0	0.0	43.4	49.5	60.6	0.0	0.0	60.2	0.0	58.6
Incr Delay (d2), s/veh	1.1	0.1	0.0	0.0	1.9	55.1	5.9	0.0	0.0	3.8	0.0	3.0
Initial Q Delay(d3),s/veh	0.0	0.0	0.0	0.0	0.0	0.0	0.0	0.0	0.0	0.0	0.0	0.0
%ile BackOfQ(50%),veh/ln	1.5	4.5	0.0	0.0	11.4	25.0	7.0	0.0	0.0	6.4	0.0	4.1
LnGrp Delay(d),s/veh	61.9	28.0	0.0	0.0	45.3	104.6	66.5	0.0	0.0	64.0	0.0	61.6
LnGrp LOS	E	C			D	F	E			E		E
Approach Vol, veh/h		565			1481			348			435	
Approach Delay, s/veh		30.4			65.0			66.5			63.4	
Approach LOS		C			E			E			E	

Timer	1	2	3	4	5	6	7	8
Assigned Phs		2		4	5	6		8
Phs Duration (G+Y+Rc), s		63.2		21.1	15.2	48.0		20.9
Change Period (Y+Rc), s		7.0		4.6	* 4.2	7.0		4.6
Max Green Setting (Gmax), s		60.2		38.2	* 15	41.0		25.4
Max Q Clear Time (g_c+I1), s		11.6		15.0	5.0	43.0		15.4
Green Ext Time (p_c), s		17.7		1.5	0.0	0.0		0.9

Intersection Summary	
HCM 2010 Ctrl Delay	58.0
HCM 2010 LOS	E

Notes

User approved volume balancing among the lanes for turning movement.

Movement	EBL	EBT	WBT	WBR	SBL	SBR
Lane Configurations						
Volume (veh/h)	512	1010	1174	827	0	877
Number	5	2	6	16		
Initial Q (Qb), veh	0	0	0	0		
Ped-Bike Adj(A_pbT)	1.00			1.00		
Parking Bus, Adj	1.00	1.00	1.00	1.00		
Adj Sat Flow, veh/h/ln	1863	1863	1863	1863		
Adj Flow Rate, veh/h	545	1074	1249	0		
Adj No. of Lanes	1	3	2	1		
Peak Hour Factor	0.94	0.94	0.94	0.94		
Percent Heavy Veh, %	2	2	2	2		
Cap, veh/h	569	4910	2195	982		
Arrive On Green	0.32	0.97	0.62	0.00		
Sat Flow, veh/h	1774	5253	3632	1583		
Grp Volume(v), veh/h	545	1074	1249	0		
Grp Sat Flow(s),veh/h/ln	1774	1695	1770	1583		
Q Serve(g_s), s	48.2	1.5	33.2	0.0		
Cycle Q Clear(g_c), s	48.2	1.5	33.2	0.0		
Prop In Lane	1.00			1.00		
Lane Grp Cap(c), veh/h	569	4910	2195	982		
V/C Ratio(X)	0.96	0.22	0.57	0.00		
Avail Cap(c_a), veh/h	632	4910	2195	982		
HCM Platoon Ratio	1.00	1.00	1.00	1.00		
Upstream Filter(I)	0.33	0.33	1.00	0.00		
Uniform Delay (d), s/veh	53.3	0.1	17.8	0.0		
Incr Delay (d2), s/veh	11.6	0.0	1.1	0.0		
Initial Q Delay(d3),s/veh	0.0	0.0	0.0	0.0		
%ile BackOfQ(50%),veh/ln	25.4	0.6	16.5	0.0		
LnGrp Delay(d),s/veh	64.9	0.2	18.9	0.0		
LnGrp LOS	E	A	B			
Approach Vol, veh/h		1619	1249			
Approach Delay, s/veh		21.9	18.9			
Approach LOS		C	B			

Timer	1	2	3	4	5	6	7	8
Assigned Phs		2			5	6		
Phs Duration (G+Y+Rc), s		160.0			55.3	104.7		
Change Period (Y+Rc), s		5.5			4.0	5.5		
Max Green Setting (Gmax), s		154.5			57.0	93.5		
Max Q Clear Time (g_c+I1), s		3.5			50.2	35.2		
Green Ext Time (p_c), s		36.9			1.1	29.0		

Intersection Summary	
HCM 2010 Ctrl Delay	20.6
HCM 2010 LOS	C

Movement	EBL	EBT	EBR	WBL	WBT	WBR	NBL	NBT	NBR	SBL	SBT	SBR
Lane Configurations												
Volume (veh/h)	97	97	166	94	57	166	135	982	107	129	1197	185
Number	7	4	14	3	8	18	5	2	12	1	6	16
Initial Q (Qb), veh	0	0	0	0	0	0	0	0	0	0	0	0
Ped-Bike Adj(A_pbT)	1.00		0.96	1.00		0.97	1.00		1.00	1.00		0.99
Parking Bus, Adj	1.00	1.00	1.00	1.00	1.00	1.00	1.00	1.00	1.00	1.00	1.00	1.00
Adj Sat Flow, veh/h/ln	1863	1863	1863	1863	1863	1863	1863	1863	1900	1863	1863	1863
Adj Flow Rate, veh/h	102	102	175	99	60	175	142	1034	113	136	1260	195
Adj No. of Lanes	2	1	1	1	1	1	2	2	0	1	2	1
Peak Hour Factor	0.95	0.95	0.95	0.95	0.95	0.95	0.95	0.95	0.95	0.95	0.95	0.95
Percent Heavy Veh, %	2	2	2	2	2	2	2	2	2	2	2	2
Cap, veh/h	168	306	250	126	348	287	215	1373	150	169	1626	795
Arrive On Green	0.05	0.16	0.16	0.07	0.19	0.19	0.06	0.43	0.43	0.10	0.46	0.46
Sat Flow, veh/h	3442	1863	1519	1774	1863	1540	3442	3219	352	1774	3539	1564
Grp Volume(v), veh/h	102	102	175	99	60	175	142	568	579	136	1260	195
Grp Sat Flow(s),veh/h/ln	1721	1863	1519	1774	1863	1540	1721	1770	1801	1774	1770	1564
Q Serve(g_s), s	2.3	3.9	8.8	4.4	2.2	8.4	3.3	21.9	21.9	6.1	24.1	5.7
Cycle Q Clear(g_c), s	2.3	3.9	8.8	4.4	2.2	8.4	3.3	21.9	21.9	6.1	24.1	5.7
Prop In Lane	1.00		1.00	1.00		1.00	1.00		0.20	1.00		1.00
Lane Grp Cap(c), veh/h	168	306	250	126	348	287	215	755	768	169	1626	795
V/C Ratio(X)	0.61	0.33	0.70	0.79	0.17	0.61	0.66	0.75	0.75	0.80	0.78	0.25
Avail Cap(c_a), veh/h	299	716	584	147	699	578	222	755	768	196	1667	813
HCM Platoon Ratio	1.00	1.00	1.00	1.00	1.00	1.00	1.00	1.00	1.00	1.00	1.00	1.00
Upstream Filter(I)	1.00	1.00	1.00	1.00	1.00	1.00	1.00	1.00	1.00	1.00	1.00	1.00
Uniform Delay (d), s/veh	37.6	29.8	31.9	36.9	27.6	30.1	37.0	19.5	19.6	35.8	18.3	11.2
Incr Delay (d2), s/veh	1.3	0.6	3.6	17.5	0.1	0.8	5.3	4.5	4.4	16.2	2.5	0.2
Initial Q Delay(d3),s/veh	0.0	0.0	0.0	0.0	0.0	0.0	0.0	0.0	0.0	0.0	0.0	0.0
%ile BackOfQ(50%),veh/ln	1.2	2.1	3.9	2.8	1.1	3.6	1.7	11.5	11.7	3.7	12.3	2.5
LnGrp Delay(d),s/veh	39.0	30.4	35.4	54.4	27.7	30.9	42.3	24.0	24.0	52.0	20.8	11.4
LnGrp LOS	D	C	D	D	C	C	D	C	C	D	C	B
Approach Vol, veh/h		379			334			1289			1591	
Approach Delay, s/veh		35.0			37.3			26.0			22.3	
Approach LOS		D			D			C			C	

Timer	1	2	3	4	5	6	7	8
Assigned Phs	1	2	3	4	5	6	7	8
Phs Duration (G+Y+Rc), s	12.1	39.7	10.1	18.8	9.4	42.4	8.3	20.6
Change Period (Y+Rc), s	4.4	5.3	4.4	* 5.5	4.4	* 5.3	4.4	5.5
Max Green Setting (Gmax), s	8.9	34.2	6.7	* 31	5.2	* 38	7.0	30.3
Max Q Clear Time (g_c+I1), s	8.1	23.9	6.4	10.8	5.3	26.1	4.3	10.4
Green Ext Time (p_c), s	0.0	9.7	0.0	1.6	0.0	11.0	0.0	1.6

Intersection Summary	
HCM 2010 Ctrl Delay	26.4
HCM 2010 LOS	C

Notes

* HCM 2010 computational engine requires equal clearance times for the phases crossing the barrier.

Movement	EBL	EBT	EBR	WBL	WBT	WBR	NBL	NBT	NBR	SBL	SBT	SBR
Lane Configurations												
Volume (veh/h)	0	999	246	280	282	0	0	0	0	394	1	1229
Number	5	2	12	1	6	16				7	4	14
Initial Q (Qb), veh	0	0	0	0	0	0				0	0	0
Ped-Bike Adj(A_pbT)	1.00		1.00	1.00		1.00				1.00		1.00
Parking Bus, Adj	1.00	1.00	1.00	1.00	1.00	1.00				1.00	1.00	1.00
Adj Sat Flow, veh/h/ln	0	1863	1863	1863	1863	0				1900	1863	1863
Adj Flow Rate, veh/h	0	1041	256	292	294	0				410	1	0
Adj No. of Lanes	0	2	1	2	2	0				0	1	1
Peak Hour Factor	0.96	0.96	0.96	0.96	0.96	0.96				0.96	0.96	0.96
Percent Heavy Veh, %	0	2	2	2	2	0				2	2	2
Cap, veh/h	0	1752	784	370	2282	0				459	1	411
Arrive On Green	0.00	0.50	0.50	0.04	0.21	0.00				0.26	0.26	0.00
Sat Flow, veh/h	0	3632	1583	3442	3632	0				1770	4	1583
Grp Volume(v), veh/h	0	1041	256	292	294	0				411	0	0
Grp Sat Flow(s),veh/h/ln	0	1770	1583	1721	1770	0				1774	0	1583
Q Serve(g_s), s	0.0	21.0	9.7	8.4	6.7	0.0				22.3	0.0	0.0
Cycle Q Clear(g_c), s	0.0	21.0	9.7	8.4	6.7	0.0				22.3	0.0	0.0
Prop In Lane	0.00		1.00	1.00		0.00				1.00		1.00
Lane Grp Cap(c), veh/h	0	1752	784	370	2282	0				460	0	411
V/C Ratio(X)	0.00	0.59	0.33	0.79	0.13	0.00				0.89	0.00	0.00
Avail Cap(c_a), veh/h	0	1752	784	475	2282	0				575	0	513
HCM Platoon Ratio	1.00	1.00	1.00	0.33	0.33	1.00				1.00	1.00	1.00
Upstream Filter(I)	0.00	1.00	1.00	0.76	0.76	0.00				1.00	0.00	0.00
Uniform Delay (d), s/veh	0.0	18.1	15.2	47.1	16.6	0.0				35.7	0.0	0.0
Incr Delay (d2), s/veh	0.0	1.5	1.1	5.2	0.1	0.0				14.0	0.0	0.0
Initial Q Delay(d3),s/veh	0.0	0.0	0.0	0.0	0.0	0.0				0.0	0.0	0.0
%ile BackOfQ(50%),veh/ln	0.0	10.6	4.5	4.3	3.3	0.0				12.8	0.0	0.0
LnGrp Delay(d),s/veh	0.0	19.5	16.3	52.3	16.7	0.0				49.7	0.0	0.0
LnGrp LOS		B	B	D	B					D		
Approach Vol, veh/h		1297			586						411	
Approach Delay, s/veh		18.9			34.4						49.7	
Approach LOS		B			C						D	

Timer	1	2	3	4	5	6	7	8
Assigned Phs	1	2		4		6		
Phs Duration (G+Y+Rc), s	15.0	54.5		30.5		69.5		
Change Period (Y+Rc), s*	4.2	5.0		4.6		5.0		
Max Green Setting (Gmax), s*	14.1	40.0		32.4		58.0		
Max Q Clear Time (g_c+I1), s	10.4	23.0		24.3		8.7		
Green Ext Time (p_c), s	0.3	9.6		1.6		15.4		

Intersection Summary	
HCM 2010 Ctrl Delay	28.4
HCM 2010 LOS	C

Notes

* HCM 2010 computational engine requires equal clearance times for the phases crossing the barrier.

Movement	EBL	EBT	EBR	WBL	WBT	WBR	NBL	NBT	NBR	SBL	SBT	SBR
Lane Configurations												
Volume (veh/h)	825	568	0	0	341	423	221	0	444	0	0	0
Number	5	2	12	1	6	16	7	4	14			
Initial Q (Qb), veh	0	0	0	0	0	0	0	0	0			
Ped-Bike Adj(A_pbT)	1.00		1.00	1.00		0.98	1.00		1.00			
Parking Bus, Adj	1.00	1.00	1.00	1.00	1.00	1.00	1.00	1.00	1.00			
Adj Sat Flow, veh/h/ln	1863	1863	0	0	1863	1900	1900	1863	1863			
Adj Flow Rate, veh/h	887	611	0	0	367	455	238	0	477			
Adj No. of Lanes	2	2	0	0	2	0	0	1	1			
Peak Hour Factor	0.93	0.93	0.93	0.93	0.93	0.93	0.93	0.93	0.93			
Percent Heavy Veh, %	2	2	0	0	2	2	2	2	2			
Cap, veh/h	964	2283	0	0	571	499	451	0	402			
Arrive On Green	0.47	1.00	0.00	0.00	0.32	0.32	0.25	0.00	0.25			
Sat Flow, veh/h	3442	3632	0	0	1863	1544	1774	0	1583			
Grp Volume(v), veh/h	887	611	0	0	367	455	238	0	477			
Grp Sat Flow(s),veh/h/ln	1721	1770	0	0	1770	1544	1774	0	1583			
Q Serve(g_s), s	24.1	0.0	0.0	0.0	17.7	28.3	11.6	0.0	25.4			
Cycle Q Clear(g_c), s	24.1	0.0	0.0	0.0	17.7	28.3	11.6	0.0	25.4			
Prop In Lane	1.00		0.00	0.00		1.00	1.00		1.00			
Lane Grp Cap(c), veh/h	964	2283	0	0	571	499	451	0	402			
V/C Ratio(X)	0.92	0.27	0.00	0.00	0.64	0.91	0.53	0.00	1.19			
Avail Cap(c_a), veh/h	1094	2283	0	0	571	499	451	0	402			
HCM Platoon Ratio	1.67	1.67	1.00	1.00	1.00	1.00	1.00	1.00	1.00			
Upstream Filter(I)	0.72	0.72	0.00	0.00	0.85	0.85	1.00	0.00	1.00			
Uniform Delay (d), s/veh	25.6	0.0	0.0	0.0	28.9	32.5	32.1	0.0	37.3			
Incr Delay (d2), s/veh	8.8	0.2	0.0	0.0	4.7	20.9	1.2	0.0	106.2			
Initial Q Delay(d3),s/veh	0.0	0.0	0.0	0.0	0.0	0.0	0.0	0.0	0.0			
%ile BackOfQ(50%),veh/ln	12.5	0.1	0.0	0.0	9.4	14.9	5.8	0.0	31.3			
LnGrp Delay(d),s/veh	34.4	0.2	0.0	0.0	33.6	53.4	33.3	0.0	143.5			
LnGrp LOS	C	A			C	D	C		F			
Approach Vol, veh/h		1498			822			715				
Approach Delay, s/veh		20.4			44.6			106.8				
Approach LOS		C			D			F				

Timer	1	2	3	4	5	6	7	8
Assigned Phs		2		4	5	6		
Phs Duration (G+Y+Rc), s		70.0		30.0	32.2	37.8		
Change Period (Y+Rc), s		5.5		4.6	* 4.2	5.5		
Max Green Setting (Gmax), s		64.5		25.4	* 32	28.5		
Max Q Clear Time (g_c+I1), s		2.0		27.4	26.1	30.3		
Green Ext Time (p_c), s		14.8		0.0	1.9	0.0		

Intersection Summary	
HCM 2010 Ctrl Delay	47.3
HCM 2010 LOS	D

Notes

* HCM 2010 computational engine requires equal clearance times for the phases crossing the barrier.

Movement	EBL	EBT	EBR	WBL	WBT	WBR	NBL	NBT	NBR	SBL	SBT	SBR
Lane Configurations												
Volume (veh/h)	472	55	545	25	66	30	443	193	17	17	176	319
Number	5	2	12	1	6	16	3	8	18	7	4	14
Initial Q (Qb), veh	0	0	0	0	0	0	0	0	0	0	0	0
Ped-Bike Adj(A_pbT)	1.00		1.00	1.00		1.00	1.00		1.00	1.00		1.00
Parking Bus, Adj	1.00	1.00	1.00	1.00	1.00	1.00	1.00	1.00	1.00	1.00	1.00	1.00
Adj Sat Flow, veh/h/ln	1863	1863	1863	1863	1863	1900	1863	1863	1900	1900	1863	1863
Adj Flow Rate, veh/h	519	60	599	27	73	33	487	212	19	19	297	282
Adj No. of Lanes	2	1	1	1	2	0	2	1	0	0	1	1
Peak Hour Factor	0.91	0.91	0.91	0.91	0.91	0.91	0.91	0.91	0.91	0.91	0.91	0.91
Percent Heavy Veh, %	2	2	2	2	2	2	2	2	2	2	2	2
Cap, veh/h	1133	613	812	137	186	79	652	310	28	21	324	294
Arrive On Green	0.33	0.33	0.33	0.08	0.08	0.08	0.18	0.18	0.18	0.19	0.19	0.19
Sat Flow, veh/h	3442	1863	1583	1774	2419	1031	3548	1685	151	112	1745	1583
Grp Volume(v), veh/h	519	60	599	27	52	54	487	0	231	316	0	282
Grp Sat Flow(s),veh/h/ln	1721	1863	1583	1774	1770	1681	1774	0	1836	1857	0	1583
Q Serve(g_s), s	10.4	1.9	25.9	1.2	2.4	2.7	11.3	0.0	10.3	14.6	0.0	15.4
Cycle Q Clear(g_c), s	10.4	1.9	25.9	1.2	2.4	2.7	11.3	0.0	10.3	14.6	0.0	15.4
Prop In Lane	1.00		1.00	1.00		0.61	1.00		0.08	0.06		1.00
Lane Grp Cap(c), veh/h	1133	613	812	137	136	129	652	0	337	345	0	294
V/C Ratio(X)	0.46	0.10	0.74	0.20	0.38	0.42	0.75	0.00	0.68	0.92	0.00	0.96
Avail Cap(c_a), veh/h	1143	619	817	366	365	347	1106	0	572	345	0	294
HCM Platoon Ratio	1.00	1.00	1.00	1.00	1.00	1.00	1.00	1.00	1.00	1.00	1.00	1.00
Upstream Filter(I)	1.00	1.00	1.00	1.00	1.00	1.00	1.00	0.00	1.00	1.00	0.00	1.00
Uniform Delay (d), s/veh	23.1	20.3	16.7	37.8	38.3	38.4	33.7	0.0	33.3	34.9	0.0	35.2
Incr Delay (d2), s/veh	0.6	0.1	4.2	0.7	1.8	2.1	1.7	0.0	2.5	28.4	0.0	41.5
Initial Q Delay(d3),s/veh	0.0	0.0	0.0	0.0	0.0	0.0	0.0	0.0	0.0	0.0	0.0	0.0
%ile BackOfQ(50%),veh/ln	5.0	1.0	15.2	0.6	1.3	1.3	5.7	0.0	5.4	10.2	0.0	10.1
LnGrp Delay(d),s/veh	23.7	20.4	20.8	38.5	40.1	40.5	35.4	0.0	35.7	63.3	0.0	76.7
LnGrp LOS	C	C	C	D	D	D	D		D	E		E
Approach Vol, veh/h		1178			133			718			598	
Approach Delay, s/veh		22.1			39.9			35.5			69.6	
Approach LOS		C			D			D			E	

Timer	1	2	3	4	5	6	7	8
Assigned Phs		2		4		6		8
Phs Duration (G+Y+Rc), s		33.6		21.1		11.6		20.9
Change Period (Y+Rc), s		4.9		4.9		4.9		4.9
Max Green Setting (Gmax), s		29.0		16.2		18.0		27.2
Max Q Clear Time (g_c+I1), s		27.9		17.4		4.7		13.3
Green Ext Time (p_c), s		0.9		0.0		0.4		2.7

Intersection Summary	
HCM 2010 Ctrl Delay	37.5
HCM 2010 LOS	D

Notes

User approved volume balancing among the lanes for turning movement.

Movement	EBL	EBT	EBR	WBL	WBT	WBR	NBL	NBT	NBR	SBL	SBT	SBR
Lane Configurations												
Volume (veh/h)	57	4	30	57	6	21	26	521	32	11	596	43
Number	7	4	14	3	8	18	5	2	12	1	6	16
Initial Q (Qb), veh	0	0	0	0	0	0	0	0	0	0	0	0
Ped-Bike Adj(A_pbT)	1.00		1.00	1.00		1.00	1.00		1.00	1.00		1.00
Parking Bus, Adj	1.00	1.00	1.00	1.00	1.00	1.00	1.00	1.00	1.00	1.00	1.00	1.00
Adj Sat Flow, veh/h/ln	1900	1863	1900	1900	1863	1900	1863	1863	1900	1863	1863	1900
Adj Flow Rate, veh/h	62	4	33	62	7	23	28	566	35	12	648	47
Adj No. of Lanes	0	1	0	0	1	0	1	1	0	1	1	0
Peak Hour Factor	0.92	0.92	0.92	0.92	0.92	0.92	0.92	0.92	0.92	0.92	0.92	0.91
Percent Heavy Veh, %	2	2	2	2	2	2	2	2	2	2	2	2
Cap, veh/h	147	11	46	154	17	34	40	1278	79	20	1245	90
Arrive On Green	0.08	0.08	0.08	0.08	0.08	0.08	0.02	0.74	0.74	0.01	0.73	0.73
Sat Flow, veh/h	966	132	549	1023	195	406	1774	1736	107	1774	1716	124
Grp Volume(v), veh/h	99	0	0	92	0	0	28	0	601	12	0	695
Grp Sat Flow(s),veh/h/ln	1647	0	0	1624	0	0	1774	0	1844	1774	0	1841
Q Serve(g_s), s	0.3	0.0	0.0	0.0	0.0	0.0	1.4	0.0	11.5	0.6	0.0	15.0
Cycle Q Clear(g_c), s	4.9	0.0	0.0	4.7	0.0	0.0	1.4	0.0	11.5	0.6	0.0	15.0
Prop In Lane	0.63		0.33	0.67		0.25	1.00		0.06	1.00		0.07
Lane Grp Cap(c), veh/h	204	0	0	204	0	0	40	0	1357	20	0	1335
V/C Ratio(X)	0.48	0.00	0.00	0.45	0.00	0.00	0.71	0.00	0.44	0.59	0.00	0.52
Avail Cap(c_a), veh/h	744	0	0	740	0	0	79	0	1357	79	0	1335
HCM Platoon Ratio	1.00	1.00	1.00	1.00	1.00	1.00	1.00	1.00	1.00	1.00	1.00	1.00
Upstream Filter(I)	1.00	0.00	0.00	1.00	0.00	0.00	1.00	0.00	1.00	1.00	0.00	1.00
Uniform Delay (d), s/veh	39.9	0.0	0.0	39.8	0.0	0.0	43.7	0.0	4.7	44.3	0.0	5.5
Incr Delay (d2), s/veh	0.7	0.0	0.0	0.6	0.0	0.0	8.2	0.0	1.0	9.6	0.0	1.5
Initial Q Delay(d3),s/veh	0.0	0.0	0.0	0.0	0.0	0.0	0.0	0.0	0.0	0.0	0.0	0.0
%ile BackOfQ(50%),veh/ln	2.4	0.0	0.0	2.2	0.0	0.0	0.8	0.0	6.1	0.4	0.0	8.1
LnGrp Delay(d),s/veh	40.6	0.0	0.0	40.4	0.0	0.0	51.9	0.0	5.7	53.8	0.0	6.9
LnGrp LOS	D			D			D		A	D		A
Approach Vol, veh/h		99			92			629			707	
Approach Delay, s/veh		40.6			40.4			7.8			7.7	
Approach LOS		D			D			A			A	

Timer	1	2	3	4	5	6	7	8
Assigned Phs	1	2		4	5	6		8
Phs Duration (G+Y+Rc), s	5.4	72.0		12.5	6.4	71.1		12.5
Change Period (Y+Rc), s	4.4	* 5.8		4.9	4.4	5.8		4.9
Max Green Setting (Gmax), s	4.0	* 30		41.0	4.0	29.9		41.0
Max Q Clear Time (g_c+I1), s	2.6	13.5		6.9	3.4	17.0		6.7
Green Ext Time (p_c), s	0.0	10.2		0.7	0.0	8.4		0.7

Intersection Summary	
HCM 2010 Ctrl Delay	11.8
HCM 2010 LOS	B

Notes

* HCM 2010 computational engine requires equal clearance times for the phases crossing the barrier.

Movement	NBT	NBR	SBL	SBT	SWL	SWR
Lane Configurations						
Volume (veh/h)	447	620	0	618	682	17
Number	2	12	1	6	3	18
Initial Q (Qb), veh	0	0	0	0	0	0
Ped-Bike Adj(A_pbT)		1.00	1.00		1.00	1.00
Parking Bus, Adj	1.00	1.00	1.00	1.00	1.00	1.00
Adj Sat Flow, veh/h/ln	1863	1900	0	1863	1863	1900
Adj Flow Rate, veh/h	486	674	0	672	758	0
Adj No. of Lanes	2	0	0	2	2	1
Peak Hour Factor	0.92	0.92	0.92	0.92	0.92	0.92
Percent Heavy Veh, %	2	2	0	2	2	0
Cap, veh/h	830	742	0	1659	995	453
Arrive On Green	0.47	0.47	0.00	0.47	0.28	0.00
Sat Flow, veh/h	1863	1583	0	3725	3548	1615
Grp Volume(v), veh/h	486	674	0	672	758	0
Grp Sat Flow(s),veh/h/ln	1770	1583	0	1770	1774	1615
Q Serve(g_s), s	8.6	16.8	0.0	5.3	8.3	0.0
Cycle Q Clear(g_c), s	8.6	16.8	0.0	5.3	8.3	0.0
Prop In Lane		1.00	0.00		1.00	1.00
Lane Grp Cap(c), veh/h	830	742	0	1659	995	453
V/C Ratio(X)	0.59	0.91	0.00	0.41	0.76	0.00
Avail Cap(c_a), veh/h	830	742	0	1659	1339	609
HCM Platoon Ratio	1.00	1.00	1.00	1.00	1.00	1.00
Upstream Filter(I)	1.00	1.00	0.00	1.00	1.00	0.00
Uniform Delay (d), s/veh	8.3	10.5	0.0	7.4	14.0	0.0
Incr Delay (d2), s/veh	3.0	17.0	0.0	0.7	1.8	0.0
Initial Q Delay(d3),s/veh	0.0	0.0	0.0	0.0	0.0	0.0
%ile BackOfQ(50%),veh/ln	4.7	10.6	0.0	2.7	4.3	0.0
LnGrp Delay(d),s/veh	11.3	27.5	0.0	8.2	15.9	0.0
LnGrp LOS	B	C		A	B	
Approach Vol, veh/h	1160			672	758	
Approach Delay, s/veh	20.7			8.2	15.9	
Approach LOS	C			A	B	

Timer	1	2	3	4	5	6	7	8
Assigned Phs		2				6		8
Phs Duration (G+Y+Rc), s		25.8				25.8		16.9
Change Period (Y+Rc), s		* 5.8				5.8		4.9
Max Green Setting (Gmax), s		* 20				16.2		16.1
Max Q Clear Time (g_c+I1), s		18.8				7.3		10.3
Green Ext Time (p_c), s		1.1				6.9		1.6

Intersection Summary	
HCM 2010 Ctrl Delay	16.0
HCM 2010 LOS	B

Notes

User approved volume balancing among the lanes for turning movement.

Movement	EBL	EBT	EBR	WBL	WBT	WBR	NBL	NBT	NBR	SBL	SBT	SBR
Lane Configurations												
Volume (veh/h)	37	33	160	15	12	568	70	375	16	685	656	33
Number	7	4	14	3	8	18	5	2	12	1	6	16
Initial Q (Qb), veh	0	0	0	0	0	0	0	0	0	0	0	0
Ped-Bike Adj(A_pbT)	1.00		1.00	1.00		1.00	1.00		1.00	1.00		1.00
Parking Bus, Adj	1.00	1.00	1.00	1.00	1.00	1.00	1.00	1.00	1.00	1.00	1.00	1.00
Adj Sat Flow, veh/h/ln	1863	1863	1900	1900	1863	1863	1863	1863	1900	1863	1863	1900
Adj Flow Rate, veh/h	38	34	163	0	0	604	71	383	16	699	669	34
Adj No. of Lanes	1	1	0	0	1	2	1	3	0	2	2	0
Peak Hour Factor	0.98	0.98	0.98	0.98	0.98	0.98	0.98	0.98	0.98	0.98	0.98	0.98
Percent Heavy Veh, %	2	2	2	2	2	2	2	2	2	2	2	2
Cap, veh/h	195	49	235	0	325	1258	90	2481	103	767	2287	116
Arrive On Green	0.17	0.17	0.17	0.00	0.00	0.17	0.05	0.50	0.50	0.22	0.67	0.67
Sat Flow, veh/h	812	281	1345	0	1863	3167	1774	5009	208	3442	3428	174
Grp Volume(v), veh/h	38	0	197	0	0	604	71	258	141	699	345	358
Grp Sat Flow(s),veh/h/ln	812	0	1625	0	1863	1583	1774	1695	1826	1721	1770	1832
Q Serve(g_s), s	5.5	0.0	15.5	0.0	0.0	19.3	5.4	5.7	5.7	26.9	11.0	11.0
Cycle Q Clear(g_c), s	5.5	0.0	15.5	0.0	0.0	19.3	5.4	5.7	5.7	26.9	11.0	11.0
Prop In Lane	1.00		0.83	0.00		1.00	1.00		0.11	1.00		0.10
Lane Grp Cap(c), veh/h	195	0	284	0	325	1258	90	1679	905	767	1181	1223
V/C Ratio(X)	0.20	0.00	0.69	0.00	0.00	0.48	0.79	0.15	0.16	0.91	0.29	0.29
Avail Cap(c_a), veh/h	298	0	491	0	563	1663	217	1679	905	1306	1181	1223
HCM Platoon Ratio	1.00	1.00	1.00	1.00	1.00	1.00	1.00	1.00	1.00	1.00	1.00	1.00
Upstream Filter(I)	1.00	0.00	1.00	0.00	0.00	0.69	1.00	1.00	1.00	1.00	1.00	1.00
Uniform Delay (d), s/veh	48.6	0.0	52.7	0.0	0.0	30.5	63.8	18.7	18.8	51.5	9.4	9.4
Incr Delay (d2), s/veh	0.2	0.0	1.1	0.0	0.0	0.1	5.6	0.2	0.4	3.2	0.6	0.6
Initial Q Delay(d3),s/veh	0.0	0.0	0.0	0.0	0.0	0.0	0.0	0.0	0.0	0.0	0.0	0.0
%ile BackOfQ(50%),veh/ln	1.2	0.0	7.0	0.0	0.0	8.5	2.8	2.7	3.0	13.2	5.6	5.8
LnGrp Delay(d),s/veh	48.8	0.0	53.9	0.0	0.0	30.6	69.4	18.9	19.1	54.8	10.0	10.0
LnGrp LOS	D		D			C	E	B	B	D	A	A
Approach Vol, veh/h		235			604			470			1402	
Approach Delay, s/veh		53.1			30.6			26.6			32.3	
Approach LOS		D			C			C			C	

Timer	1	2	3	4	5	6	7	8
Assigned Phs	1	2		4	5	6		8
Phs Duration (G+Y+Rc), s	34.7	72.7		28.6	11.3	96.1		28.6
Change Period (Y+Rc), s	4.4	* 5.3		4.9	4.4	5.3		4.9
Max Green Setting (Gmax), s	51.6	* 29		41.1	16.6	63.7		41.1
Max Q Clear Time (g_c+I1), s	28.9	7.7		17.5	7.4	13.0		21.3
Green Ext Time (p_c), s	1.4	6.9		2.5	0.0	8.3		2.4

Intersection Summary	
HCM 2010 Ctrl Delay	32.7
HCM 2010 LOS	C

Notes

User approved volume balancing among the lanes for turning movement.

Movement	WBL	WBR	NBT	NBR	SBL	SBT
Lane Configurations						
Volume (veh/h)	873	10	504	848	0	821
Number	3	18	2	12	1	6
Initial Q (Qb), veh	0	0	0	0	0	0
Ped-Bike Adj(A_pbT)	1.00	1.00		1.00	1.00	
Parking Bus, Adj	1.00	1.00	1.00	1.00	1.00	1.00
Adj Sat Flow, veh/h/ln	1863	1900	1863	1863	0	1863
Adj Flow Rate, veh/h	918	0	525	0	0	855
Adj No. of Lanes	2	1	2	1	0	2
Peak Hour Factor	0.96	0.96	0.96	0.96	0.96	0.96
Percent Heavy Veh, %	2	0	2	2	0	2
Cap, veh/h	1124	512	1679	751	0	1679
Arrive On Green	0.32	0.00	0.47	0.00	0.00	0.47
Sat Flow, veh/h	3548	1615	3632	1583	0	3725
Grp Volume(v), veh/h	918	0	525	0	0	855
Grp Sat Flow(s),veh/h/ln	1774	1615	1770	1583	0	1770
Q Serve(g_s), s	16.2	0.0	6.2	0.0	0.0	11.4
Cycle Q Clear(g_c), s	16.2	0.0	6.2	0.0	0.0	11.4
Prop In Lane	1.00	1.00		1.00	0.00	
Lane Grp Cap(c), veh/h	1124	512	1679	751	0	1679
V/C Ratio(X)	0.82	0.00	0.31	0.00	0.00	0.51
Avail Cap(c_a), veh/h	1424	648	1679	751	0	1679
HCM Platoon Ratio	1.00	1.00	1.00	1.00	1.00	1.00
Upstream Filter(I)	1.00	0.00	1.00	0.00	0.00	1.00
Uniform Delay (d), s/veh	21.4	0.0	11.0	0.0	0.0	12.4
Incr Delay (d2), s/veh	3.3	0.0	0.5	0.0	0.0	1.1
Initial Q Delay(d3),s/veh	0.0	0.0	0.0	0.0	0.0	0.0
%ile BackOfQ(50%),veh/ln	8.4	0.0	3.1	0.0	0.0	5.7
LnGrp Delay(d),s/veh	24.7	0.0	11.5	0.0	0.0	13.5
LnGrp LOS	C		B			B
Approach Vol, veh/h	918		525			855
Approach Delay, s/veh	24.7		11.5			13.5
Approach LOS	C		B			B

Timer	1	2	3	4	5	6	7	8
Assigned Phs		2				6		8
Phs Duration (G+Y+Rc), s		37.8				37.8		30.2
Change Period (Y+Rc), s		5.5				* 5.5		8.7
Max Green Setting (Gmax), s		26.5				* 27		27.3
Max Q Clear Time (g_c+I1), s		8.2				13.4		18.2
Green Ext Time (p_c), s		12.3				9.6		3.3

Intersection Summary	
HCM 2010 Ctrl Delay	17.5
HCM 2010 LOS	B

Notes

User approved volume balancing among the lanes for turning movement.

Movement	EBL	EBT	EBR	WBL	WBT	WBR	NBL	NBT	NBR	SBL	SBT	SBR
Lane Configurations												
Volume (veh/h)	452	266	24	230	193	127	37	638	219	204	657	358
Number	7	4	14	3	8	18	5	2	12	1	6	16
Initial Q (Qb), veh	0	0	0	0	0	0	0	0	0	0	0	0
Ped-Bike Adj(A_pbT)	1.00		1.00	1.00		1.00	1.00		1.00	1.00		1.00
Parking Bus, Adj	1.00	1.00	1.00	1.00	1.00	1.00	1.00	1.00	1.00	1.00	1.00	1.00
Adj Sat Flow, veh/h/ln	1863	1863	1900	1863	1863	1863	1863	1863	1900	1863	1863	1900
Adj Flow Rate, veh/h	395	403	26	250	198	135	39	679	233	217	699	381
Adj No. of Lanes	1	1	0	2	1	1	1	2	0	1	2	0
Peak Hour Factor	0.94	0.94	0.94	0.94	0.94	0.94	0.94	0.94	0.94	0.94	0.94	0.94
Percent Heavy Veh, %	2	2	2	2	2	2	2	2	2	2	2	2
Cap, veh/h	453	442	29	448	235	200	50	885	304	235	988	538
Arrive On Green	0.26	0.26	0.26	0.13	0.13	0.13	0.03	0.34	0.34	0.13	0.45	0.45
Sat Flow, veh/h	1774	1731	112	3548	1863	1583	1774	2588	888	1774	2214	1206
Grp Volume(v), veh/h	395	0	429	250	198	135	39	464	448	217	559	521
Grp Sat Flow(s),veh/h/ln	1774	0	1843	1774	1863	1583	1774	1770	1706	1774	1770	1650
Q Serve(g_s), s	29.0	0.0	30.7	9.0	14.1	11.1	3.0	31.8	31.8	16.4	34.7	34.8
Cycle Q Clear(g_c), s	29.0	0.0	30.7	9.0	14.1	11.1	3.0	31.8	31.8	16.4	34.7	34.8
Prop In Lane	1.00		0.06	1.00		1.00	1.00		0.52	1.00		0.73
Lane Grp Cap(c), veh/h	453	0	470	448	235	200	50	605	584	235	790	736
V/C Ratio(X)	0.87	0.00	0.91	0.56	0.84	0.68	0.78	0.77	0.77	0.92	0.71	0.71
Avail Cap(c_a), veh/h	497	0	516	629	330	281	69	605	584	235	790	736
HCM Platoon Ratio	1.00	1.00	1.00	1.00	1.00	1.00	1.00	1.00	1.00	1.00	1.00	1.00
Upstream Filter(I)	0.56	0.00	0.56	1.00	1.00	1.00	1.00	1.00	1.00	1.00	1.00	1.00
Uniform Delay (d), s/veh	48.5	0.0	49.2	55.9	58.1	56.8	65.7	39.9	39.9	58.3	30.5	30.5
Incr Delay (d2), s/veh	9.0	0.0	12.5	0.4	9.5	1.5	20.9	9.0	9.3	38.0	5.3	5.7
Initial Q Delay(d3),s/veh	0.0	0.0	0.0	0.0	0.0	0.0	0.0	0.0	0.0	0.0	0.0	0.0
%ile BackOfQ(50%),veh/ln	15.4	0.0	17.2	4.4	7.9	4.9	1.8	17.0	16.4	10.6	18.1	17.0
LnGrp Delay(d),s/veh	57.5	0.0	61.7	56.3	67.6	58.2	86.6	48.9	49.2	96.4	35.8	36.2
LnGrp LOS	E		E	E	E	E	F	D	D	F	D	D
Approach Vol, veh/h		824			583			951			1297	
Approach Delay, s/veh		59.7			60.6			50.6			46.1	
Approach LOS		E			E			D			D	

Timer	1	2	3	4	5	6	7	8
Assigned Phs	1	2		4	5	6		8
Phs Duration (G+Y+Rc), s	22.4	51.9		39.6	8.2	66.1		22.1
Change Period (Y+Rc), s	4.4	* 5.4		4.9	4.4	5.4		4.9
Max Green Setting (Gmax), s	18.0	* 37		38.1	5.3	48.9		24.1
Max Q Clear Time (g_c+I1), s	13.4	33.8		32.7	5.0	36.8		16.1
Green Ext Time (p_c), s	0.0	2.2		2.0	0.0	7.2		1.0

Intersection Summary	
HCM 2010 Ctrl Delay	52.6
HCM 2010 LOS	D

Notes

User approved volume balancing among the lanes for turning movement.

Movement	EBL	EBT	EBR	WBL	WBT	WBR	NBL	NBT	NBR	SBL	SBT	SBR
Lane Configurations												
Volume (veh/h)	256	824	94	5	773	42	68	7	10	122	21	446
Number	5	2	12	1	6	16	3	8	18	7	4	14
Initial Q (Qb), veh	0	0	0	0	0	0	0	0	0	0	0	0
Ped-Bike Adj(A_pbT)	1.00		1.00	1.00		1.00	1.00		1.00	1.00		1.00
Parking Bus, Adj	1.00	1.00	1.00	1.00	1.00	1.00	1.00	1.00	1.00	1.00	1.00	1.00
Adj Sat Flow, veh/h/ln	1863	1863	1900	1863	1863	1900	1900	1863	1900	1900	1863	1863
Adj Flow Rate, veh/h	281	905	103	5	849	46	75	8	11	134	23	490
Adj No. of Lanes	1	2	0	1	2	0	0	1	0	0	1	1
Peak Hour Factor	0.91	0.91	0.91	0.91	0.91	0.91	0.91	0.91	0.91	0.91	0.91	0.91
Percent Heavy Veh, %	2	2	2	2	2	2	2	2	2	2	2	2
Cap, veh/h	307	2057	234	9	1619	88	170	19	19	361	54	659
Arrive On Green	0.17	0.64	0.64	0.01	0.47	0.47	0.24	0.24	0.24	0.24	0.24	0.24
Sat Flow, veh/h	1774	3203	365	1774	3415	185	503	78	77	1284	220	1583
Grp Volume(v), veh/h	281	500	508	5	440	455	94	0	0	157	0	490
Grp Sat Flow(s),veh/h/ln	1774	1770	1798	1774	1770	1830	659	0	0	1504	0	1583
Q Serve(g_s), s	21.2	19.2	19.2	0.4	23.7	23.7	11.1	0.0	0.0	0.0	0.0	33.1
Cycle Q Clear(g_c), s	21.2	19.2	19.2	0.4	23.7	23.7	22.9	0.0	0.0	11.8	0.0	33.1
Prop In Lane	1.00		0.20	1.00		0.10	0.80		0.12	0.85		1.00
Lane Grp Cap(c), veh/h	307	1136	1155	9	839	868	208	0	0	415	0	659
V/C Ratio(X)	0.92	0.44	0.44	0.56	0.52	0.52	0.45	0.00	0.00	0.38	0.00	0.74
Avail Cap(c_a), veh/h	477	1136	1155	60	839	868	208	0	0	415	0	659
HCM Platoon Ratio	1.00	1.00	1.00	1.00	1.00	1.00	1.00	1.00	1.00	1.00	1.00	1.00
Upstream Filter(I)	1.00	1.00	1.00	1.00	1.00	1.00	1.00	0.00	0.00	1.00	0.00	1.00
Uniform Delay (d), s/veh	55.3	12.1	12.1	67.5	25.0	25.0	51.8	0.0	0.0	43.4	0.0	33.6
Incr Delay (d2), s/veh	11.9	1.2	1.2	18.5	2.3	2.3	0.6	0.0	0.0	0.2	0.0	4.0
Initial Q Delay(d3),s/veh	0.0	0.0	0.0	0.0	0.0	0.0	0.0	0.0	0.0	0.0	0.0	0.0
%ile BackOfQ(50%),veh/ln	11.4	9.7	9.8	0.2	12.0	12.4	3.3	0.0	0.0	5.0	0.0	16.3
LnGrp Delay(d),s/veh	67.1	13.4	13.4	86.0	27.4	27.3	52.4	0.0	0.0	43.6	0.0	37.6
LnGrp LOS	E	B	B	F	C	C	D			D		D
Approach Vol, veh/h		1289			900			94			647	
Approach Delay, s/veh		25.1			27.7			52.4			39.0	
Approach LOS		C			C			D			D	

Timer	1	2	3	4	5	6	7	8
Assigned Phs	1	2		4	5	6		8
Phs Duration (G+Y+Rc), s	5.1	92.9		38.0	27.9	70.1		38.0
Change Period (Y+Rc), s	4.4	* 5.6		4.9	4.4	5.6		4.9
Max Green Setting (Gmax), s	4.6	* 84		33.1	36.6	51.4		33.1
Max Q Clear Time (g_c+I1), s	2.4	21.2		35.1	23.2	25.7		24.9
Green Ext Time (p_c), s	0.0	50.7		0.0	0.3	23.3		1.5

Intersection Summary	
HCM 2010 Ctrl Delay	29.8
HCM 2010 LOS	C

Notes

* HCM 2010 computational engine requires equal clearance times for the phases crossing the barrier.

Intersection	
Int Delay, s/veh	1.2

Movement	EBT	EBR	WBL	WBT	NBL	NBR
Vol, veh/h	869	42	40	760	20	23
Conflicting Peds, #/hr	0	18	0	0	0	0
Sign Control	Free	Free	Free	Free	Stop	Stop
RT Channelized	-	None	-	None	-	None
Storage Length	-	-	100	-	0	-
Veh in Median Storage, #	0	-	-	0	0	-
Grade, %	0	-	-	0	0	-
Peak Hour Factor	84	84	84	84	84	84
Heavy Vehicles, %	2	2	2	2	2	2
Mvmt Flow	1035	50	48	905	24	27

Major/Minor	Major1		Major2		Minor1	
Conflicting Flow All	0	0	1085	0	1608	542
Stage 1	-	-	-	-	1060	-
Stage 2	-	-	-	-	548	-
Critical Hdwy	-	-	4.14	-	6.84	6.94
Critical Hdwy Stg 1	-	-	-	-	5.84	-
Critical Hdwy Stg 2	-	-	-	-	5.84	-
Follow-up Hdwy	-	-	2.22	-	3.52	3.32
Pot Cap-1 Maneuver	-	-	639	-	96	485
Stage 1	-	-	-	-	294	-
Stage 2	-	-	-	-	543	-
Platoon blocked, %	-	-		-		
Mov Cap-1 Maneuver	-	-	639	-	87	485
Mov Cap-2 Maneuver	-	-	-	-	87	-
Stage 1	-	-	-	-	294	-
Stage 2	-	-	-	-	495	-

Approach	EB	WB	NB
HCM Control Delay, s	0	0.6	39.3
HCM LOS			E

Minor Lane/Major Mvmt	NBLn1	EBT	EBR	WBL	WBT
Capacity (veh/h)	155	-	-	639	-
HCM Lane V/C Ratio	0.33	-	-	0.075	-
HCM Control Delay (s)	39.3	-	-	11.1	-
HCM Lane LOS	E	-	-	B	-
HCM 95th %tile Q(veh)	1.3	-	-	0.2	-

Movement	EBL	EBT	EBR	WBL	WBT	WBR	NBL	NBT	NBR	SBL	SBT	SBR
Lane Configurations												
Volume (veh/h)	175	686	70	44	564	135	47	43	40	220	19	224
Number	5	2	12	1	6	16	3	8	18	7	4	14
Initial Q (Qb), veh	0	0	0	0	0	0	0	0	0	0	0	0
Ped-Bike Adj(A_pbT)	1.00		0.97	1.00		0.98	1.00		0.98	1.00		0.90
Parking Bus, Adj	1.00	1.00	1.00	1.00	1.00	1.00	1.00	1.00	1.00	1.00	1.00	1.00
Adj Sat Flow, veh/h/ln	1863	1863	1900	1863	1863	1863	1863	1863	1900	1863	1863	1863
Adj Flow Rate, veh/h	188	738	75	47	606	145	51	46	43	251	0	241
Adj No. of Lanes	1	2	0	1	2	1	1	1	0	2	0	1
Peak Hour Factor	0.93	0.93	0.93	0.93	0.93	0.93	0.93	0.93	0.93	0.93	0.93	0.93
Percent Heavy Veh, %	2	2	2	2	2	2	2	2	2	2	2	2
Cap, veh/h	219	1832	186	335	1426	985	127	63	59	801	0	322
Arrive On Green	0.12	0.57	0.57	0.40	0.40	0.40	0.07	0.07	0.07	0.23	0.00	0.23
Sat Flow, veh/h	1774	3235	329	668	3539	1558	1774	879	821	3548	0	1426
Grp Volume(v), veh/h	188	404	409	47	606	145	51	0	89	251	0	241
Grp Sat Flow(s),veh/h/ln	1774	1770	1794	668	1770	1558	1774	0	1700	1774	0	1426
Q Serve(g_s), s	11.4	14.1	14.1	5.0	13.6	4.2	3.0	0.0	5.6	6.5	0.0	17.3
Cycle Q Clear(g_c), s	11.4	14.1	14.1	5.0	13.6	4.2	3.0	0.0	5.6	6.5	0.0	17.3
Prop In Lane	1.00		0.18	1.00		1.00	1.00		0.48	1.00		1.00
Lane Grp Cap(c), veh/h	219	1002	1016	335	1426	985	127	0	121	801	0	322
V/C Ratio(X)	0.86	0.40	0.40	0.14	0.42	0.15	0.40	0.00	0.73	0.31	0.00	0.75
Avail Cap(c_a), veh/h	284	1002	1016	335	1426	985	258	0	247	871	0	350
HCM Platoon Ratio	1.00	1.00	1.00	1.00	1.00	1.00	1.00	1.00	1.00	1.00	1.00	1.00
Upstream Filter(I)	1.00	1.00	1.00	1.00	1.00	1.00	1.00	0.00	1.00	1.00	0.00	1.00
Uniform Delay (d), s/veh	47.3	13.4	13.4	21.1	23.6	8.4	48.8	0.0	50.0	35.5	0.0	39.7
Incr Delay (d2), s/veh	17.1	1.2	1.2	0.2	0.2	0.1	2.1	0.0	8.2	0.1	0.0	6.7
Initial Q Delay(d3),s/veh	0.0	0.0	0.0	0.0	0.0	0.0	0.0	0.0	0.0	0.0	0.0	0.0
%ile BackOfQ(50%),veh/ln	6.6	7.2	7.3	0.9	6.7	2.9	1.6	0.0	2.9	3.2	0.0	7.4
LnGrp Delay(d),s/veh	64.4	14.6	14.6	21.3	23.9	8.4	50.9	0.0	58.3	35.6	0.0	46.4
LnGrp LOS	E	B	B	C	C	A	D		E	D		D
Approach Vol, veh/h		1001			798			140			492	
Approach Delay, s/veh		23.9			20.9			55.6			40.9	
Approach LOS		C			C			E			D	

Timer	1	2	3	4	5	6	7	8
Assigned Phs		2		4	5	6		8
Phs Duration (G+Y+Rc), s		68.4		29.7	18.0	50.4		11.9
Change Period (Y+Rc), s		* 6.1		4.9	4.4	6.1		4.0
Max Green Setting (Gmax), s		* 53		27.0	17.6	30.0		16.0
Max Q Clear Time (g_c+I1), s		16.1		19.3	13.4	15.6		7.6
Green Ext Time (p_c), s		16.3		0.7	0.1	9.4		0.3

Intersection Summary	
HCM 2010 Ctrl Delay	28.2
HCM 2010 LOS	C

Notes

User approved volume balancing among the lanes for turning movement.

Intersection	
Int Delay, s/veh	2

Movement	EBL	EBT	WBT	WBR	SBL	SBR
Vol, veh/h	57	889	669	15	30	74
Conflicting Peds, #/hr	0	0	0	3	0	0
Sign Control	Free	Free	Free	Free	Stop	Stop
RT Channelized	-	None	-	None	-	None
Storage Length	140	-	-	-	0	-
Veh in Median Storage, #	-	0	0	-	0	-
Grade, %	-	0	0	-	0	-
Peak Hour Factor	87	87	87	87	87	87
Heavy Vehicles, %	2	2	2	2	2	2
Mvmt Flow	66	1022	769	17	34	85

Major/Minor	Major1		Major2		Minor2	
Conflicting Flow All	786	0	-	0	1420	393
Stage 1	-	-	-	-	778	-
Stage 2	-	-	-	-	642	-
Critical Hdwy	4.14	-	-	-	6.84	6.94
Critical Hdwy Stg 1	-	-	-	-	5.84	-
Critical Hdwy Stg 2	-	-	-	-	5.84	-
Follow-up Hdwy	2.22	-	-	-	3.52	3.32
Pot Cap-1 Maneuver	829	-	-	-	127	606
Stage 1	-	-	-	-	413	-
Stage 2	-	-	-	-	486	-
Platoon blocked, %		-	-	-		
Mov Cap-1 Maneuver	829	-	-	-	117	606
Mov Cap-2 Maneuver	-	-	-	-	117	-
Stage 1	-	-	-	-	413	-
Stage 2	-	-	-	-	447	-

Approach	EB	WB	SB
HCM Control Delay, s	0.6	0	27.8
HCM LOS			D

Minor Lane/Major Mvmt	EBL	EBT	WBT	WBR	SBLn1
Capacity (veh/h)	829	-	-	-	275
HCM Lane V/C Ratio	0.079	-	-	-	0.435
HCM Control Delay (s)	9.7	-	-	-	27.8
HCM Lane LOS	A	-	-	-	D
HCM 95th %tile Q(veh)	0.3	-	-	-	2.1

Movement	EBL	EBT	EBR	WBL	WBT	WBR	NBL	NBT	NBR	SBL	SBT	SBR
Lane Configurations												
Volume (veh/h)	49	643	227	154	532	34	125	43	149	20	17	27
Number	5	2	12	1	6	16	3	8	18	7	4	14
Initial Q (Qb), veh	0	0	0	0	0	0	0	0	0	0	0	0
Ped-Bike Adj(A_pbT)	1.00		0.98	1.00		0.97	1.00		0.97	1.00		1.00
Parking Bus, Adj	1.00	1.00	1.00	1.00	1.00	1.00	1.00	1.00	1.00	1.00	1.00	1.00
Adj Sat Flow, veh/h/ln	1863	1863	1863	1863	1863	1900	1863	1863	1863	1863	1863	1863
Adj Flow Rate, veh/h	54	707	249	169	585	37	137	47	164	22	19	30
Adj No. of Lanes	1	2	1	1	2	0	1	1	1	1	1	1
Peak Hour Factor	0.91	0.91	0.91	0.91	0.91	0.91	0.91	0.91	0.91	0.91	0.91	0.91
Percent Heavy Veh, %	2	2	2	2	2	2	2	2	2	2	2	2
Cap, veh/h	70	1834	806	198	1994	126	165	305	428	32	165	140
Arrive On Green	0.03	0.35	0.35	0.11	0.59	0.59	0.09	0.16	0.16	0.02	0.09	0.09
Sat Flow, veh/h	1774	3539	1555	1774	3375	213	1774	1863	1532	1774	1863	1583
Grp Volume(v), veh/h	54	707	249	169	306	316	137	47	164	22	19	30
Grp Sat Flow(s),veh/h/ln	1774	1770	1555	1774	1770	1819	1774	1863	1532	1774	1863	1583
Q Serve(g_s), s	3.3	16.6	12.9	10.3	9.4	9.5	8.3	2.4	9.6	1.4	1.0	1.9
Cycle Q Clear(g_c), s	3.3	16.6	12.9	10.3	9.4	9.5	8.3	2.4	9.6	1.4	1.0	1.9
Prop In Lane	1.00		1.00	1.00		0.12	1.00		1.00	1.00		1.00
Lane Grp Cap(c), veh/h	70	1834	806	198	1046	1075	165	305	428	32	165	140
V/C Ratio(X)	0.78	0.39	0.31	0.85	0.29	0.29	0.83	0.15	0.38	0.70	0.12	0.21
Avail Cap(c_a), veh/h	144	1834	806	268	1046	1075	219	571	646	90	440	374
HCM Platoon Ratio	0.67	0.67	0.67	1.00	1.00	1.00	1.00	1.00	1.00	1.00	1.00	1.00
Upstream Filter(I)	1.00	1.00	1.00	1.00	1.00	1.00	1.00	1.00	1.00	1.00	1.00	1.00
Uniform Delay (d), s/veh	53.1	22.7	21.5	48.0	11.1	11.1	49.0	39.4	32.3	53.7	46.2	46.6
Incr Delay (d2), s/veh	6.7	0.6	1.0	13.9	0.7	0.7	13.9	0.1	0.2	9.8	0.1	0.3
Initial Q Delay(d3),s/veh	0.0	0.0	0.0	0.0	0.0	0.0	0.0	0.0	0.0	0.0	0.0	0.0
%ile BackOfQ(50%),veh/ln	1.8	8.3	5.7	5.8	4.8	4.9	4.7	1.2	4.1	0.8	0.5	0.9
LnGrp Delay(d),s/veh	59.8	23.3	22.5	61.8	11.8	11.8	62.9	39.5	32.5	63.5	46.3	46.9
LnGrp LOS	E	C	C	E	B	B	E	D	C	E	D	D
Approach Vol, veh/h		1010			791			348			71	
Approach Delay, s/veh		25.1			22.5			45.4			51.9	
Approach LOS		C			C			D			D	

Timer	1	2	3	4	5	6	7	8
Assigned Phs	1	2	3	4	5	6	7	8
Phs Duration (G+Y+Rc), s	16.7	63.7	14.6	14.9	8.7	71.7	6.4	23.2
Change Period (Y+Rc), s	4.4	* 6.7	4.4	* 5.2	4.4	6.7	4.4	5.2
Max Green Setting (Gmax), s	16.6	* 34	13.6	* 26	8.9	41.1	5.6	33.7
Max Q Clear Time (g_c+I1), s	12.3	18.6	10.3	3.9	5.3	11.5	3.4	11.6
Green Ext Time (p_c), s	0.1	6.2	0.1	0.5	0.0	7.8	0.0	0.5

Intersection Summary	
HCM 2010 Ctrl Delay	28.2
HCM 2010 LOS	C

Notes

* HCM 2010 computational engine requires equal clearance times for the phases crossing the barrier.

Movement	EBL	EBT	EBR	WBL	WBT	WBR	NBL	NBT	NBR	SBL	SBT	SBR
Lane Configurations												
Volume (veh/h)	10	14	17	39	21	25	32	644	62	27	669	12
Number	7	4	14	3	8	18	5	2	12	1	6	16
Initial Q (Qb), veh	0	0	0	0	0	0	0	0	0	0	0	0
Ped-Bike Adj(A_pbT)	0.98		0.92	0.93		0.98	1.00		0.96	1.00		0.97
Parking Bus, Adj	1.00	1.00	1.00	1.00	1.00	1.00	1.00	1.00	1.00	1.00	1.00	1.00
Adj Sat Flow, veh/h/ln	1900	1863	1900	1900	1863	1900	1863	1863	1900	1863	1863	1900
Adj Flow Rate, veh/h	10	15	18	41	22	26	33	671	65	28	697	12
Adj No. of Lanes	0	1	0	0	1	0	1	2	0	1	2	0
Peak Hour Factor	0.96	0.96	0.96	0.96	0.96	0.96	0.96	0.96	0.96	0.96	0.96	0.96
Percent Heavy Veh, %	2	2	2	2	2	2	2	2	2	2	2	2
Cap, veh/h	81	114	111	146	79	73	41	2201	213	37	2402	41
Arrive On Green	0.17	0.17	0.17	0.17	0.17	0.17	0.02	0.68	0.68	0.04	1.00	1.00
Sat Flow, veh/h	241	680	663	590	474	439	1774	3249	314	1774	3558	61
Grp Volume(v), veh/h	43	0	0	89	0	0	33	365	371	28	347	362
Grp Sat Flow(s),veh/h/ln	1583	0	0	1503	0	0	1774	1770	1794	1774	1770	1850
Q Serve(g_s), s	0.0	0.0	0.0	3.0	0.0	0.0	2.0	9.2	9.2	1.7	0.0	0.0
Cycle Q Clear(g_c), s	2.4	0.0	0.0	5.4	0.0	0.0	2.0	9.2	9.2	1.7	0.0	0.0
Prop In Lane	0.23		0.42	0.46		0.29	1.00		0.18	1.00		0.03
Lane Grp Cap(c), veh/h	305	0	0	299	0	0	41	1199	1215	37	1195	1249
V/C Ratio(X)	0.14	0.00	0.00	0.30	0.00	0.00	0.80	0.30	0.31	0.75	0.29	0.29
Avail Cap(c_a), veh/h	497	0	0	482	0	0	171	1199	1215	155	1195	1249
HCM Platoon Ratio	1.00	1.00	1.00	1.00	1.00	1.00	1.00	1.00	1.00	2.00	2.00	2.00
Upstream Filter(I)	1.00	0.00	0.00	1.00	0.00	0.00	1.00	1.00	1.00	0.92	0.92	0.92
Uniform Delay (d), s/veh	39.2	0.0	0.0	40.3	0.0	0.0	53.5	7.2	7.2	52.4	0.0	0.0
Incr Delay (d2), s/veh	0.1	0.0	0.0	0.2	0.0	0.0	12.0	0.7	0.6	10.2	0.6	0.5
Initial Q Delay(d3),s/veh	0.0	0.0	0.0	0.0	0.0	0.0	0.0	0.0	0.0	0.0	0.0	0.0
%ile BackOfQ(50%),veh/ln	1.1	0.0	0.0	2.4	0.0	0.0	1.1	4.7	4.8	0.9	0.2	0.2
LnGrp Delay(d),s/veh	39.2	0.0	0.0	40.5	0.0	0.0	65.5	7.9	7.9	62.6	0.6	0.5
LnGrp LOS	D			D			E	A	A	E	A	A
Approach Vol, veh/h		43			89			769			737	
Approach Delay, s/veh		39.2			40.5			10.3			2.9	
Approach LOS		D			D			B			A	

Timer	1	2	3	4	5	6	7	8
Assigned Phs	1	2		4	5	6		8
Phs Duration (G+Y+Rc), s	6.7	80.0		23.3	7.0	79.8		23.3
Change Period (Y+Rc), s	4.4	* 5.5		4.9	4.4	5.5		4.9
Max Green Setting (Gmax), s	9.6	* 54		32.1	10.6	52.5		32.1
Max Q Clear Time (g_c+I1), s	3.7	11.2		4.4	4.0	2.0		7.4
Green Ext Time (p_c), s	0.0	20.9		0.5	0.0	22.6		0.5

Intersection Summary	
HCM 2010 Ctrl Delay	9.4
HCM 2010 LOS	A

Notes

* HCM 2010 computational engine requires equal clearance times for the phases crossing the barrier.

Movement	EBL	EBT	EBR	WBL	WBT	WBR	NBL	NBT	NBR	SBL	SBT	SBR
Lane Configurations												
Volume (veh/h)	93	86	81	60	111	74	104	550	43	119	757	67
Number	7	4	14	3	8	18	5	2	12	1	6	16
Initial Q (Qb), veh	0	0	0	0	0	0	0	0	0	0	0	0
Ped-Bike Adj(A_pbT)	0.99		0.97	0.99		0.97	1.00		0.95	1.00		0.95
Parking Bus, Adj	1.00	1.00	1.00	1.00	1.00	1.00	1.00	1.00	1.00	1.00	1.00	1.00
Adj Sat Flow, veh/h/ln	1863	1863	1900	1863	1863	1900	1863	1863	1900	1863	1863	1900
Adj Flow Rate, veh/h	95	88	83	61	113	76	106	561	44	121	772	68
Adj No. of Lanes	1	1	0	1	1	0	1	2	0	1	2	0
Peak Hour Factor	0.98	0.98	0.98	0.98	0.98	0.98	0.98	0.98	0.98	0.98	0.98	0.98
Percent Heavy Veh, %	2	2	2	2	2	2	2	2	2	2	2	2
Cap, veh/h	227	201	190	239	238	160	131	1826	143	150	1841	162
Arrive On Green	0.23	0.23	0.23	0.23	0.23	0.23	0.15	1.00	1.00	0.03	0.19	0.19
Sat Flow, veh/h	1176	867	818	1193	1025	689	1774	3313	259	1774	3276	288
Grp Volume(v), veh/h	95	0	171	61	0	189	106	299	306	121	417	423
Grp Sat Flow(s),veh/h/ln	1176	0	1685	1193	0	1714	1774	1770	1803	1774	1770	1795
Q Serve(g_s), s	8.3	0.0	9.5	5.1	0.0	10.5	6.4	0.0	0.0	7.5	22.9	22.9
Cycle Q Clear(g_c), s	18.8	0.0	9.5	14.6	0.0	10.5	6.4	0.0	0.0	7.5	22.9	22.9
Prop In Lane	1.00		0.49	1.00		0.40	1.00		0.14	1.00		0.16
Lane Grp Cap(c), veh/h	227	0	391	239	0	398	131	975	993	150	995	1009
V/C Ratio(X)	0.42	0.00	0.44	0.25	0.00	0.47	0.81	0.31	0.31	0.81	0.42	0.42
Avail Cap(c_a), veh/h	318	0	522	332	0	531	268	975	993	284	995	1009
HCM Platoon Ratio	1.00	1.00	1.00	1.00	1.00	1.00	2.00	2.00	2.00	0.33	0.33	0.33
Upstream Filter(I)	1.00	0.00	1.00	1.00	0.00	1.00	0.97	0.97	0.97	0.92	0.92	0.92
Uniform Delay (d), s/veh	44.5	0.0	36.1	42.3	0.0	36.4	46.2	0.0	0.0	52.6	28.9	28.9
Incr Delay (d2), s/veh	0.5	0.0	0.3	0.2	0.0	0.3	4.4	0.8	0.8	3.5	1.2	1.2
Initial Q Delay(d3),s/veh	0.0	0.0	0.0	0.0	0.0	0.0	0.0	0.0	0.0	0.0	0.0	0.0
%ile BackOfQ(50%),veh/ln	2.7	0.0	4.4	1.7	0.0	5.0	3.3	0.2	0.2	3.8	11.6	11.8
LnGrp Delay(d),s/veh	45.0	0.0	36.4	42.5	0.0	36.7	50.5	0.8	0.8	56.1	30.1	30.1
LnGrp LOS	D		D	D		D	D	A	A	E	C	C
Approach Vol, veh/h		266			250			711			961	
Approach Delay, s/veh		39.4			38.2			8.2			33.4	
Approach LOS		D			D			A			C	

Timer	1	2	3	4	5	6	7	8
Assigned Phs	1	2		4	5	6		8
Phs Duration (G+Y+Rc), s	13.7	65.8		30.5	12.5	67.0		30.5
Change Period (Y+Rc), s	4.4	5.2		4.9	4.4	* 5.2		4.9
Max Green Setting (Gmax), s	17.6	43.8		34.1	16.6	* 45		34.1
Max Q Clear Time (g_c+I1), s	10.5	2.0		20.8	8.4	24.9		16.6
Green Ext Time (p_c), s	0.1	14.4		1.5	0.1	10.5		1.7

Intersection Summary	
HCM 2010 Ctrl Delay	26.5
HCM 2010 LOS	C

Notes

* HCM 2010 computational engine requires equal clearance times for the phases crossing the barrier.

Movement	EBL	EBT	EBR	WBL	WBT	WBR	NBL	NBT	NBR	SBL	SBT	SBR
Lane Configurations												
Volume (veh/h)	80	135	45	35	112	168	67	661	48	342	810	64
Number	7	4	14	3	8	18	5	2	12	1	6	16
Initial Q (Qb), veh	0	0	0	0	0	0	0	0	0	0	0	0
Ped-Bike Adj(A_pbT)	0.95		0.97	0.99		0.90	1.00		0.96	1.00		0.97
Parking Bus, Adj	1.00	1.00	1.00	1.00	1.00	1.00	1.00	1.00	1.00	1.00	1.00	1.00
Adj Sat Flow, veh/h/ln	1863	1863	1900	1863	1863	1863	1863	1863	1900	1863	1863	1900
Adj Flow Rate, veh/h	86	145	48	38	120	181	72	711	52	368	871	69
Adj No. of Lanes	1	1	0	1	1	1	1	2	0	1	2	0
Peak Hour Factor	0.93	0.93	0.93	0.93	0.93	0.93	0.93	0.93	0.93	0.93	0.93	0.93
Percent Heavy Veh, %	2	2	2	2	2	2	2	2	2	2	2	2
Cap, veh/h	242	300	99	219	421	323	93	1401	102	399	1965	156
Arrive On Green	0.23	0.23	0.23	0.23	0.23	0.23	0.02	0.14	0.14	0.22	0.59	0.59
Sat Flow, veh/h	1021	1330	440	1175	1863	1431	1774	3335	244	1774	3315	263
Grp Volume(v), veh/h	86	0	193	38	120	181	72	377	386	368	465	475
Grp Sat Flow(s),veh/h/ln	1021	0	1770	1175	1863	1431	1774	1770	1809	1774	1770	1808
Q Serve(g_s), s	8.4	0.0	10.4	3.2	5.9	12.3	4.4	21.7	21.7	22.3	16.0	16.0
Cycle Q Clear(g_c), s	14.2	0.0	10.4	13.6	5.9	12.3	4.4	21.7	21.7	22.3	16.0	16.0
Prop In Lane	1.00		0.25	1.00		1.00	1.00		0.13	1.00		0.15
Lane Grp Cap(c), veh/h	242	0	400	219	421	323	93	744	760	399	1049	1072
V/C Ratio(X)	0.36	0.00	0.48	0.17	0.29	0.56	0.78	0.51	0.51	0.92	0.44	0.44
Avail Cap(c_a), veh/h	272	0	452	254	476	366	165	744	760	542	1049	1072
HCM Platoon Ratio	1.00	1.00	1.00	1.00	1.00	1.00	0.33	0.33	0.33	1.00	1.00	1.00
Upstream Filter(I)	1.00	0.00	1.00	1.00	1.00	1.00	0.94	0.94	0.94	0.10	0.10	0.10
Uniform Delay (d), s/veh	41.1	0.0	37.0	42.9	35.2	37.7	53.4	36.8	36.8	41.7	12.4	12.4
Incr Delay (d2), s/veh	0.3	0.0	0.3	0.1	0.1	0.6	4.9	2.3	2.3	2.1	0.1	0.1
Initial Q Delay(d3),s/veh	0.0	0.0	0.0	0.0	0.0	0.0	0.0	0.0	0.0	0.0	0.0	0.0
%ile BackOfQ(50%),veh/ln	2.4	0.0	5.1	1.0	3.0	4.9	2.3	11.1	11.4	11.2	7.8	8.0
LnGrp Delay(d),s/veh	41.5	0.0	37.3	43.1	35.4	38.3	58.3	39.1	39.1	43.8	12.5	12.5
LnGrp LOS	D		D	D	D	D	E	D	D	D	B	B
Approach Vol, veh/h		279			339			835			1308	
Approach Delay, s/veh		38.6			37.8			40.8			21.3	
Approach LOS		D			D			D			C	

Timer	1	2	3	4	5	6	7	8
Assigned Phs	1	2		4	5	6		8
Phs Duration (G+Y+Rc), s	29.1	51.1		29.7	10.2	70.1		29.7
Change Period (Y+Rc), s	4.4	4.9		4.9	4.4	4.9		4.9
Max Green Setting (Gmax), s	33.6	34.1		28.1	10.2	57.5		28.1
Max Q Clear Time (g_c+I1), s	24.3	23.7		16.2	6.4	18.0		15.6
Green Ext Time (p_c), s	0.4	9.6		1.6	0.0	32.5		1.6

Intersection Summary	
HCM 2010 Ctrl Delay	31.0
HCM 2010 LOS	C

Movement	EBL	EBT	EBR	WBL	WBT	WBR	NBL	NBT	NBR	SBL	SBT	SBR
Lane Configurations												
Volume (veh/h)	91	379	329	552	518	127	200	447	417	109	604	112
Number	5	2	12	1	6	16	3	8	18	7	4	14
Initial Q (Qb), veh	0	0	0	0	0	0	0	0	0	0	0	0
Ped-Bike Adj(A_pbT)	1.00		0.97	1.00		0.98	1.00		0.96	1.00		0.89
Parking Bus, Adj	1.00	1.00	1.00	1.00	1.00	1.00	1.00	1.00	1.00	1.00	1.00	1.00
Adj Sat Flow, veh/h/ln	1863	1863	1900	1863	1863	1863	1863	1863	1900	1863	1863	1900
Adj Flow Rate, veh/h	96	399	346	581	545	134	211	471	439	115	636	118
Adj No. of Lanes	1	2	0	2	2	1	1	2	0	2	2	0
Peak Hour Factor	0.95	0.95	0.95	0.95	0.95	0.95	0.95	0.95	0.95	0.95	0.95	0.95
Percent Heavy Veh, %	2	2	2	2	2	2	2	2	2	2	2	2
Cap, veh/h	119	492	423	433	1184	520	238	698	602	166	900	167
Arrive On Green	0.07	0.28	0.28	0.13	0.33	0.33	0.13	0.39	0.39	0.05	0.31	0.31
Sat Flow, veh/h	1774	1782	1531	3442	3539	1555	1774	1770	1525	3442	2916	539
Grp Volume(v), veh/h	96	396	349	581	545	134	211	471	439	115	385	369
Grp Sat Flow(s),veh/h/ln	1774	1770	1544	1721	1770	1555	1774	1770	1525	1721	1770	1686
Q Serve(g_s), s	6.6	25.9	26.2	15.6	15.0	7.8	14.5	27.2	30.3	4.1	23.9	24.0
Cycle Q Clear(g_c), s	6.6	25.9	26.2	15.6	15.0	7.8	14.5	27.2	30.3	4.1	23.9	24.0
Prop In Lane	1.00		0.99	1.00		1.00	1.00		1.00	1.00		0.32
Lane Grp Cap(c), veh/h	119	488	426	433	1184	520	238	698	602	166	546	520
V/C Ratio(X)	0.81	0.81	0.82	1.34	0.46	0.26	0.89	0.67	0.73	0.69	0.71	0.71
Avail Cap(c_a), veh/h	166	488	426	433	1184	520	295	698	602	197	546	520
HCM Platoon Ratio	1.00	1.00	1.00	1.00	1.00	1.00	1.00	1.00	1.00	1.00	1.00	1.00
Upstream Filter(I)	1.00	1.00	1.00	1.00	1.00	1.00	0.88	0.88	0.88	1.00	1.00	1.00
Uniform Delay (d), s/veh	57.0	41.9	42.0	54.2	32.4	30.0	52.8	31.0	31.9	58.1	37.9	37.9
Incr Delay (d2), s/veh	12.3	13.6	16.0	168.7	1.3	1.2	18.5	4.6	6.7	5.5	7.5	7.9
Initial Q Delay(d3),s/veh	0.0	0.0	0.0	0.0	0.0	0.0	0.0	0.0	0.0	0.0	0.0	0.0
%ile BackOfQ(50%),veh/ln	3.7	14.5	13.0	17.5	7.6	3.5	8.3	14.1	13.9	2.1	12.8	12.3
LnGrp Delay(d),s/veh	69.4	55.5	58.0	222.9	33.7	31.2	71.3	35.6	38.7	63.6	45.3	45.9
LnGrp LOS	E	E	E	F	C	C	E	D	D	E	D	D
Approach Vol, veh/h		841			1260			1121			869	
Approach Delay, s/veh		58.1			120.7			43.5			48.0	
Approach LOS		E			F			D			D	

Timer	1	2	3	4	5	6	7	8
Assigned Phs	1	2	3	4	5	6	7	8
Phs Duration (G+Y+Rc), s	20.0	39.5	21.0	43.5	12.7	46.8	10.4	54.1
Change Period (Y+Rc), s	4.4	5.3	4.4	5.2	4.4	5.3	4.4	* 5.2
Max Green Setting (Gmax), s	15.6	33.4	20.6	35.1	11.6	37.4	7.1	* 49
Max Q Clear Time (g_c+I1), s	17.6	28.2	16.5	26.0	8.6	17.0	6.1	32.3
Green Ext Time (p_c), s	0.0	4.2	0.1	7.8	0.0	13.2	0.0	13.3

Intersection Summary	
HCM 2010 Ctrl Delay	71.2
HCM 2010 LOS	E

Notes

* HCM 2010 computational engine requires equal clearance times for the phases crossing the barrier.

Movement	WBL	WBR	NBT	NBR	SBL	SBT
Lane Configurations						
Volume (veh/h)	498	126	1214	680	350	1223
Number	3	18	2	12	1	6
Initial Q (Qb), veh	0	0	0	0	0	0
Ped-Bike Adj(A_pbT)	1.00	1.00		0.98	1.00	
Parking Bus, Adj	1.00	1.00	1.00	1.00	1.00	1.00
Adj Sat Flow, veh/h/ln	1863	1863	1863	1863	1863	1863
Adj Flow Rate, veh/h	519	131	1265	708	365	1274
Adj No. of Lanes	2	1	2	1	2	2
Peak Hour Factor	0.96	0.96	0.96	0.96	0.96	0.96
Percent Heavy Veh, %	2	2	2	2	2	2
Cap, veh/h	623	278	1804	1066	445	2433
Arrive On Green	0.18	0.18	0.51	0.51	0.13	0.69
Sat Flow, veh/h	3548	1583	3632	1546	3442	3632
Grp Volume(v), veh/h	519	131	1265	708	365	1274
Grp Sat Flow(s),veh/h/ln	1774	1583	1770	1546	1721	1770
Q Serve(g_s), s	12.8	6.7	24.7	24.1	9.4	15.9
Cycle Q Clear(g_c), s	12.8	6.7	24.7	24.1	9.4	15.9
Prop In Lane	1.00	1.00		1.00	1.00	
Lane Grp Cap(c), veh/h	623	278	1804	1066	445	2433
V/C Ratio(X)	0.83	0.47	0.70	0.66	0.82	0.52
Avail Cap(c_a), veh/h	1061	474	1804	1066	608	2590
HCM Platoon Ratio	1.00	1.00	1.00	1.00	1.00	1.00
Upstream Filter(I)	1.00	1.00	1.00	1.00	1.00	1.00
Uniform Delay (d), s/veh	36.1	33.6	16.9	8.3	38.4	6.9
Incr Delay (d2), s/veh	1.1	0.5	1.4	1.8	4.6	0.4
Initial Q Delay(d3),s/veh	0.0	0.0	0.0	0.0	0.0	0.0
%ile BackOfQ(50%),veh/ln	6.4	3.0	12.3	16.5	4.7	7.7
LnGrp Delay(d),s/veh	37.2	34.0	18.3	10.0	43.1	7.3
LnGrp LOS	D	C	B	B	D	A
Approach Vol, veh/h	650		1973			1639
Approach Delay, s/veh	36.6		15.3			15.3
Approach LOS	D		B			B

Timer	1	2	3	4	5	6	7	8
Assigned Phs	1	2				6		8
Phs Duration (G+Y+Rc), s	16.1	52.4				68.5		22.1
Change Period (Y+Rc), s	4.4	6.2				* 6.2		6.2
Max Green Setting (Gmax), s	15.6	45.1				* 66		27.1
Max Q Clear Time (g_c+I1), s	11.4	26.7				17.9		14.8
Green Ext Time (p_c), s	0.3	18.0				44.4		1.1

Intersection Summary	
HCM 2010 Ctrl Delay	18.6
HCM 2010 LOS	B

Notes

User approved volume balancing among the lanes for turning movement.

Movement	EBL	EBT	WBT	WBR	SBL	SBR
Lane Configurations						
Volume (veh/h)	149	663	342	291	221	221
Number	5	2	6	16	7	14
Initial Q (Qb), veh	0	0	0	0	0	0
Ped-Bike Adj(A_pbT)	1.00			1.00	1.00	1.00
Parking Bus, Adj	1.00	1.00	1.00	1.00	1.00	1.00
Adj Sat Flow, veh/h/ln	1863	1863	1863	1863	1863	1863
Adj Flow Rate, veh/h	157	698	360	306	305	155
Adj No. of Lanes	1	2	2	1	2	1
Peak Hour Factor	0.95	0.95	0.95	0.95	0.95	0.95
Percent Heavy Veh, %	2	2	2	2	2	2
Cap, veh/h	203	2198	1515	969	653	291
Arrive On Green	0.11	0.62	0.43	0.43	0.18	0.18
Sat Flow, veh/h	1774	3632	3632	1583	3548	1583
Grp Volume(v), veh/h	157	698	360	306	305	155
Grp Sat Flow(s),veh/h/ln	1774	1770	1770	1583	1774	1583
Q Serve(g_s), s	4.8	5.2	3.6	5.2	4.3	5.0
Cycle Q Clear(g_c), s	4.8	5.2	3.6	5.2	4.3	5.0
Prop In Lane	1.00			1.00	1.00	1.00
Lane Grp Cap(c), veh/h	203	2198	1515	969	653	291
V/C Ratio(X)	0.77	0.32	0.24	0.32	0.47	0.53
Avail Cap(c_a), veh/h	939	4685	2558	1436	1593	711
HCM Platoon Ratio	1.00	1.00	1.00	1.00	1.00	1.00
Upstream Filter(I)	1.00	1.00	1.00	1.00	1.00	1.00
Uniform Delay (d), s/veh	24.1	5.0	10.2	5.2	20.4	20.6
Incr Delay (d2), s/veh	2.4	0.1	0.1	0.3	1.1	3.2
Initial Q Delay(d3),s/veh	0.0	0.0	0.0	0.0	0.0	0.0
%ile BackOfQ(50%),veh/ln	2.5	2.6	1.8	3.4	2.2	4.6
LnGrp Delay(d),s/veh	26.4	5.1	10.3	5.5	21.5	23.8
LnGrp LOS	C	A	B	A	C	C
Approach Vol, veh/h		855	666		460	
Approach Delay, s/veh		9.1	8.1		22.3	
Approach LOS		A	A		C	

Timer	1	2	3	4	5	6	7	8
Assigned Phs		2		4	5	6		
Phs Duration (G+Y+Rc), s		40.7		15.2	10.8	29.9		
Change Period (Y+Rc), s		6.0		4.9	4.4	* 6		
Max Green Setting (Gmax), s		74.0		25.1	29.6	* 40		
Max Q Clear Time (g_c+I1), s		7.2		7.0	6.8	7.2		
Green Ext Time (p_c), s		21.8		3.3	0.2	16.7		

Intersection Summary	
HCM 2010 Ctrl Delay	11.8
HCM 2010 LOS	B

Notes

User approved volume balancing among the lanes for turning movement.

Movement	EBL	EBT	EBR	WBL	WBT	WBR	NBL	NBT	NBR	SBL	SBT	SBR
Lane Configurations												
Volume (veh/h)	56	931	35	38	523	49	24	4	24	102	7	50
Number	5	2	12	1	6	16	3	8	18	7	4	14
Initial Q (Qb), veh	0	0	0	0	0	0	0	0	0	0	0	0
Ped-Bike Adj(A_pbT)	1.00		1.00	1.00		1.00	1.00		1.00	1.00		1.00
Parking Bus, Adj	1.00	1.00	1.00	1.00	1.00	1.00	1.00	1.00	1.00	1.00	1.00	1.00
Adj Sat Flow, veh/h/ln	1863	1863	1900	1863	1863	1900	1900	1863	1863	1863	1863	1900
Adj Flow Rate, veh/h	60	990	37	40	556	52	26	4	26	109	7	53
Adj No. of Lanes	1	2	0	1	2	0	0	1	1	1	1	0
Peak Hour Factor	0.94	0.94	0.94	0.94	0.94	0.94	0.94	0.94	0.94	0.94	0.94	0.94
Percent Heavy Veh, %	2	2	2	2	2	2	2	2	2	2	2	2
Cap, veh/h	77	2120	79	54	1952	182	238	31	247	247	29	222
Arrive On Green	0.04	0.61	0.61	0.03	0.60	0.60	0.16	0.16	0.16	0.16	0.16	0.16
Sat Flow, veh/h	1774	3479	130	1774	3273	305	953	196	1583	1374	188	1424
Grp Volume(v), veh/h	60	504	523	40	300	308	30	0	26	109	0	60
Grp Sat Flow(s),veh/h/ln	1774	1770	1840	1774	1770	1809	1149	0	1583	1374	0	1612
Q Serve(g_s), s	2.5	11.6	11.6	1.7	6.2	6.2	1.0	0.0	1.1	5.7	0.0	2.4
Cycle Q Clear(g_c), s	2.5	11.6	11.6	1.7	6.2	6.2	3.5	0.0	1.1	9.2	0.0	2.4
Prop In Lane	1.00		0.07	1.00		0.17	0.87		1.00	1.00		0.88
Lane Grp Cap(c), veh/h	77	1078	1121	54	1056	1079	269	0	247	247	0	251
V/C Ratio(X)	0.78	0.47	0.47	0.75	0.28	0.29	0.11	0.00	0.11	0.44	0.00	0.24
Avail Cap(c_a), veh/h	252	1285	1336	180	1207	1234	668	0	701	641	0	714
HCM Platoon Ratio	1.00	1.00	1.00	1.00	1.00	1.00	1.00	1.00	1.00	1.00	1.00	1.00
Upstream Filter(I)	1.00	1.00	1.00	1.00	1.00	1.00	1.00	0.00	1.00	1.00	0.00	1.00
Uniform Delay (d), s/veh	35.4	8.0	8.0	36.0	7.3	7.3	28.5	0.0	27.1	32.2	0.0	27.7
Incr Delay (d2), s/veh	6.4	1.2	1.2	7.5	0.7	0.7	0.1	0.0	0.1	0.5	0.0	0.2
Initial Q Delay(d3),s/veh	0.0	0.0	0.0	0.0	0.0	0.0	0.0	0.0	0.0	0.0	0.0	0.0
%ile BackOfQ(50%),veh/ln	1.4	6.0	6.2	0.9	3.2	3.3	0.6	0.0	0.5	2.2	0.0	1.1
LnGrp Delay(d),s/veh	41.8	9.2	9.1	43.4	8.0	8.0	28.5	0.0	27.2	32.7	0.0	27.9
LnGrp LOS	D	A	A	D	A	A	C		C	C		C
Approach Vol, veh/h		1087			648			56			169	
Approach Delay, s/veh		11.0			10.2			27.9			31.0	
Approach LOS		B			B			C			C	

Timer	1	2	3	4	5	6	7	8
Assigned Phs	1	2		4	5	6		8
Phs Duration (G+Y+Rc), s	6.7	51.6		16.5	7.6	50.6		16.5
Change Period (Y+Rc), s	4.4	* 6		4.9	4.4	6.0		4.9
Max Green Setting (Gmax), s	7.6	* 54		33.1	10.6	51.0		33.1
Max Q Clear Time (g_c+I1), s	3.7	13.6		11.2	4.5	8.2		5.5
Green Ext Time (p_c), s	0.0	31.9		0.5	0.0	33.3		0.5

Intersection Summary	
HCM 2010 Ctrl Delay	12.9
HCM 2010 LOS	B

Notes

* HCM 2010 computational engine requires equal clearance times for the phases crossing the barrier.

Movement	EBL	EBT	WBT	WBR	SBL	SBR
Lane Configurations						
Volume (veh/h)	140	1026	656	258	380	102
Number	5	2	6	16	7	14
Initial Q (Qb), veh	0	0	0	0	0	0
Ped-Bike Adj(A_pbT)	1.00			0.97	1.00	1.00
Parking Bus, Adj	1.00	1.00	1.00	1.00	1.00	1.00
Adj Sat Flow, veh/h/ln	1863	1863	1863	1863	1863	1863
Adj Flow Rate, veh/h	146	1069	683	269	396	106
Adj No. of Lanes	1	2	2	1	1	1
Peak Hour Factor	0.96	0.96	0.96	0.96	0.96	0.96
Percent Heavy Veh, %	2	2	2	2	2	2
Cap, veh/h	207	1958	1270	552	483	431
Arrive On Green	0.12	0.55	0.36	0.36	0.27	0.27
Sat Flow, veh/h	1774	3632	3632	1539	1774	1583
Grp Volume(v), veh/h	146	1069	683	269	396	106
Grp Sat Flow(s),veh/h/ln	1774	1770	1770	1539	1774	1583
Q Serve(g_s), s	4.5	11.0	8.7	7.7	11.9	3.0
Cycle Q Clear(g_c), s	4.5	11.0	8.7	7.7	11.9	3.0
Prop In Lane	1.00			1.00	1.00	1.00
Lane Grp Cap(c), veh/h	207	1958	1270	552	483	431
V/C Ratio(X)	0.71	0.55	0.54	0.49	0.82	0.25
Avail Cap(c_a), veh/h	551	3390	2004	871	1127	1006
HCM Platoon Ratio	1.00	1.00	1.00	1.00	1.00	1.00
Upstream Filter(I)	1.00	1.00	1.00	1.00	1.00	1.00
Uniform Delay (d), s/veh	24.1	8.1	14.4	14.1	19.3	16.1
Incr Delay (d2), s/veh	1.6	0.1	0.1	0.2	3.5	0.3
Initial Q Delay(d3),s/veh	0.0	0.0	0.0	0.0	0.0	0.0
%ile BackOfQ(50%),veh/ln	2.3	5.2	4.2	6.9	6.2	2.9
LnGrp Delay(d),s/veh	25.7	8.3	14.6	14.4	22.8	16.4
LnGrp LOS	C	A	B	B	C	B
Approach Vol, veh/h		1215	952		502	
Approach Delay, s/veh		10.4	14.5		21.5	
Approach LOS		B	B		C	

Timer	1	2	3	4	5	6	7	8
Assigned Phs		2		4	5	6		
Phs Duration (G+Y+Rc), s		37.3		19.4	11.0	26.2		
Change Period (Y+Rc), s		* 5.9		4.0	4.4	5.9		
Max Green Setting (Gmax), s		* 54		36.0	17.6	32.1		
Max Q Clear Time (g_c+I1), s		13.0		13.9	6.5	10.7		
Green Ext Time (p_c), s		11.7		1.6	0.1	9.5		

Intersection Summary	
HCM 2010 Ctrl Delay	13.9
HCM 2010 LOS	B

Notes

* HCM 2010 computational engine requires equal clearance times for the phases crossing the barrier.

Movement	EBL	EBT	EBR	WBL	WBT	WBR	NBL	NBT	NBR	SBL	SBT	SBR
Lane Configurations												
Volume (veh/h)	5	1475	260	152	574	10	259	4	316	11	4	0
Number	5	2	12	1	6	16	3	8	18	7	4	14
Initial Q (Qb), veh	0	0	0	0	0	0	0	0	0	0	0	0
Ped-Bike Adj(A_pbT)	1.00		0.99	1.00		0.97	1.00		0.98	1.00		1.00
Parking Bus, Adj	1.00	1.00	1.00	1.00	1.00	1.00	1.00	1.00	1.00	1.00	1.00	1.00
Adj Sat Flow, veh/h/ln	1863	1863	1900	1863	1863	1900	1900	1863	1863	1900	1863	1900
Adj Flow Rate, veh/h	5	1603	283	165	624	11	282	4	343	12	4	0
Adj No. of Lanes	1	3	0	2	2	0	0	1	1	0	1	0
Peak Hour Factor	0.92	0.92	0.92	0.92	0.92	0.92	0.92	0.92	0.92	0.92	0.92	0.92
Percent Heavy Veh, %	2	2	2	2	2	2	2	2	2	2	2	2
Cap, veh/h	9	2573	452	215	2311	41	375	5	462	78	20	0
Arrive On Green	0.01	0.59	0.59	0.13	1.00	1.00	0.23	0.23	0.23	0.23	0.23	0.00
Sat Flow, veh/h	1774	4344	763	3442	3556	63	1382	20	1553	136	84	0
Grp Volume(v), veh/h	5	1249	637	165	310	325	286	0	343	16	0	0
Grp Sat Flow(s),veh/h/ln	1774	1695	1717	1721	1770	1849	1401	0	1553	220	0	0
Q Serve(g_s), s	0.4	32.3	32.7	6.3	0.0	0.0	0.0	0.0	27.1	0.7	0.0	0.0
Cycle Q Clear(g_c), s	0.4	32.3	32.7	6.3	0.0	0.0	26.8	0.0	27.1	27.5	0.0	0.0
Prop In Lane	1.00		0.44	1.00		0.03	0.99		1.00	0.75		0.00
Lane Grp Cap(c), veh/h	9	2008	1017	215	1150	1202	380	0	462	98	0	0
V/C Ratio(X)	0.56	0.62	0.63	0.77	0.27	0.27	0.75	0.00	0.74	0.16	0.00	0.00
Avail Cap(c_a), veh/h	53	2008	1017	547	1150	1202	499	0	594	196	0	0
HCM Platoon Ratio	1.00	1.00	1.00	2.00	2.00	2.00	1.00	1.00	1.00	1.00	1.00	1.00
Upstream Filter(I)	0.74	0.74	0.74	0.95	0.95	0.95	1.00	0.00	1.00	1.00	0.00	0.00
Uniform Delay (d), s/veh	67.5	17.9	18.0	58.5	0.0	0.0	50.2	0.0	43.3	48.2	0.0	0.0
Incr Delay (d2), s/veh	13.9	1.1	2.2	2.1	0.5	0.5	3.4	0.0	2.8	0.4	0.0	0.0
Initial Q Delay(d3),s/veh	0.0	0.0	0.0	0.0	0.0	0.0	0.0	0.0	0.0	0.0	0.0	0.0
%ile BackOfQ(50%),veh/ln	0.2	15.4	16.0	3.0	0.2	0.2	10.7	0.0	12.0	0.6	0.0	0.0
LnGrp Delay(d),s/veh	81.4	19.0	20.1	60.6	0.5	0.5	53.7	0.0	46.1	48.6	0.0	0.0
LnGrp LOS	F	B	C	E	A	A	D		D	D		
Approach Vol, veh/h		1891			800			629			16	
Approach Delay, s/veh		19.5			12.9			49.5			48.6	
Approach LOS		B			B			D			D	

Timer	1	2	3	4	5	6	7	8
Assigned Phs	1	2		4	5	6		8
Phs Duration (G+Y+Rc), s	12.9	86.5		36.6	5.1	94.3		36.6
Change Period (Y+Rc), s	4.4	5.9		4.9	4.4	* 5.9		4.9
Max Green Setting (Gmax), s	21.6	55.9		43.3	4.1	* 74		43.3
Max Q Clear Time (g_c+I1), s	8.3	34.7		29.5	2.4	2.0		29.1
Green Ext Time (p_c), s	0.2	16.5		1.8	0.0	36.0		1.8

Intersection Summary	
HCM 2010 Ctrl Delay	23.7
HCM 2010 LOS	C

Notes

* HCM 2010 computational engine requires equal clearance times for the phases crossing the barrier.

Movement	EBL	EBT	EBR	WBL	WBT	WBR	NBL	NBT	NBR	SBL	SBT	SBR
Lane Configurations												
Volume (veh/h)	4	1734	68	216	902	0	59	0	275	0	0	0
Number	5	2	12	1	6	16	3	8	18			
Initial Q (Qb), veh	0	0	0	0	0	0	0	0	0			
Ped-Bike Adj(A_pbT)	1.00		1.00	1.00		1.00	1.00		1.00			
Parking Bus, Adj	1.00	1.00	1.00	1.00	1.00	1.00	1.00	1.00	1.00			
Adj Sat Flow, veh/h/ln	1863	1863	1900	1863	1863	0	1863	0	1863			
Adj Flow Rate, veh/h	4	1845	72	230	960	0	63	0	293			
Adj No. of Lanes	1	3	0	2	2	0	1	0	1			
Peak Hour Factor	0.92	0.94	0.94	0.94	0.94	0.92	0.94	0.92	0.94			
Percent Heavy Veh, %	2	2	2	2	2	0	2	0	2			
Cap, veh/h	7	3084	120	282	2459	0	354	0	316			
Arrive On Green	0.01	1.00	1.00	0.08	0.69	0.00	0.20	0.00	0.20			
Sat Flow, veh/h	1774	5022	196	3442	3632	0	1774	0	1583			
Grp Volume(v), veh/h	4	1245	672	230	960	0	63	0	293			
Grp Sat Flow(s),veh/h/ln	1774	1695	1827	1721	1770	0	1774	0	1583			
Q Serve(g_s), s	0.3	0.0	0.0	8.9	15.4	0.0	4.0	0.0	24.7			
Cycle Q Clear(g_c), s	0.3	0.0	0.0	8.9	15.4	0.0	4.0	0.0	24.7			
Prop In Lane	1.00		0.11	1.00		0.00	1.00		1.00			
Lane Grp Cap(c), veh/h	7	2082	1122	282	2459	0	354	0	316			
V/C Ratio(X)	0.55	0.60	0.60	0.82	0.39	0.00	0.18	0.00	0.93			
Avail Cap(c_a), veh/h	52	2082	1122	420	2459	0	451	0	403			
HCM Platoon Ratio	2.00	2.00	2.00	1.00	1.00	1.00	1.00	1.00	1.00			
Upstream Filter(I)	0.69	0.69	0.69	1.00	1.00	0.00	1.00	0.00	1.00			
Uniform Delay (d), s/veh	67.3	0.0	0.0	61.4	8.7	0.0	45.2	0.0	53.5			
Incr Delay (d2), s/veh	37.1	0.9	1.6	4.5	0.5	0.0	0.1	0.0	21.7			
Initial Q Delay(d3),s/veh	0.0	0.0	0.0	0.0	0.0	0.0	0.0	0.0	0.0			
%ile BackOfQ(50%),veh/ln	0.2	0.3	0.5	4.4	7.6	0.0	2.0	0.0	12.7			
LnGrp Delay(d),s/veh	104.5	0.9	1.6	65.9	9.2	0.0	45.3	0.0	75.2			
LnGrp LOS	F	A	A	E	A		D		E			
Approach Vol, veh/h		1921			1190			356				
Approach Delay, s/veh		1.4			20.1			69.9				
Approach LOS		A			C			E				

Timer	1	2	3	4	5	6	7	8
Assigned Phs	1	2			5	6		8
Phs Duration (G+Y+Rc), s	15.5	88.9			4.6	99.9		31.5
Change Period (Y+Rc), s	4.4	5.4			4.0	* 5.4		4.4
Max Green Setting (Gmax), s	15.6	70.6			4.0	* 84		34.6
Max Q Clear Time (g_c+I1), s	10.9	2.0			2.3	17.4		26.7
Green Ext Time (p_c), s	0.2	51.8			0.0	50.5		0.4

Intersection Summary	
HCM 2010 Ctrl Delay	14.8
HCM 2010 LOS	B

Notes

* HCM 2010 computational engine requires equal clearance times for the phases crossing the barrier.

Movement	EBL	EBT	EBR	WBL	WBT	WBR	NBL	NBT	NBR	SBL	SBT	SBR
Lane Configurations												
Volume (veh/h)	10	1919	80	606	1145	17	43	1	114	18	1	2
Number	5	2	12	1	6	16	3	8	18	7	4	14
Initial Q (Qb), veh	0	0	0	0	0	0	0	0	0	0	0	0
Ped-Bike Adj(A_pbT)	1.00		1.00	1.00		1.00	0.98		1.00	1.00		0.98
Parking Bus, Adj	1.00	1.00	1.00	1.00	1.00	1.00	1.00	1.00	1.00	1.00	1.00	1.00
Adj Sat Flow, veh/h/ln	1863	1863	1900	1863	1863	1900	1863	1863	1863	1863	1863	1900
Adj Flow Rate, veh/h	10	1999	83	631	1193	18	45	0	120	19	1	2
Adj No. of Lanes	1	3	0	2	3	0	1	0	2	1	1	0
Peak Hour Factor	0.96	0.96	0.96	0.96	0.96	0.96	0.96	0.96	0.96	0.96	0.96	0.96
Percent Heavy Veh, %	2	2	2	2	2	2	2	2	2	2	2	2
Cap, veh/h	16	3213	133	675	4275	64	126	0	172	122	30	60
Arrive On Green	0.01	0.64	0.64	0.39	1.00	1.00	0.05	0.00	0.05	0.05	0.05	0.05
Sat Flow, veh/h	1774	5009	207	3442	5161	78	1385	0	3167	1266	549	1098
Grp Volume(v), veh/h	10	1351	731	631	784	427	45	0	120	19	0	3
Grp Sat Flow(s),veh/h/ln	1774	1695	1826	1721	1695	1849	1385	0	1583	1266	0	1647
Q Serve(g_s), s	0.8	32.3	32.5	23.9	0.0	0.0	4.3	0.0	5.1	2.0	0.0	0.2
Cycle Q Clear(g_c), s	0.8	32.3	32.5	23.9	0.0	0.0	4.6	0.0	5.1	2.0	0.0	0.2
Prop In Lane	1.00		0.11	1.00		0.04	1.00		1.00	1.00		0.67
Lane Grp Cap(c), veh/h	16	2175	1171	675	2808	1531	126	0	172	122	0	90
V/C Ratio(X)	0.61	0.62	0.62	0.93	0.28	0.28	0.36	0.00	0.70	0.16	0.00	0.03
Avail Cap(c_a), veh/h	125	2175	1171	800	2808	1531	357	0	701	333	0	365
HCM Platoon Ratio	1.00	1.00	1.00	2.00	2.00	2.00	1.00	1.00	1.00	1.00	1.00	1.00
Upstream Filter(I)	1.00	1.00	1.00	0.35	0.35	0.35	1.00	0.00	1.00	1.00	0.00	1.00
Uniform Delay (d), s/veh	67.1	14.5	14.6	40.5	0.0	0.0	63.1	0.0	63.2	61.7	0.0	60.9
Incr Delay (d2), s/veh	12.8	1.3	2.5	6.7	0.1	0.2	0.6	0.0	1.9	0.2	0.0	0.1
Initial Q Delay(d3),s/veh	0.0	0.0	0.0	0.0	0.0	0.0	0.0	0.0	0.0	0.0	0.0	0.0
%ile BackOfQ(50%),veh/ln	0.4	15.4	17.1	11.8	0.0	0.1	1.7	0.0	2.3	0.7	0.0	0.1
LnGrp Delay(d),s/veh	79.9	15.9	17.1	47.2	0.1	0.2	63.7	0.0	65.1	62.0	0.0	61.0
LnGrp LOS	E	B	B	D	A	A	E		E	E		E
Approach Vol, veh/h		2092			1842			165			22	
Approach Delay, s/veh		16.6			16.2			64.7			61.8	
Approach LOS		B			B			E			E	

Timer	1	2	3	4	5	6	7	8
Assigned Phs	1	2		4	5	6		8
Phs Duration (G+Y+Rc), s	31.1	92.6		12.3	5.7	118.0		12.3
Change Period (Y+Rc), s	4.4	5.4		4.9	4.4	* 5.4		4.9
Max Green Setting (Gmax), s	31.6	59.6		30.1	9.6	* 82		30.1
Max Q Clear Time (g_c+I1), s	25.9	34.5		4.0	2.8	2.0		7.1
Green Ext Time (p_c), s	0.7	23.4		0.3	0.0	65.5		0.3

Intersection Summary	
HCM 2010 Ctrl Delay	18.6
HCM 2010 LOS	B

Notes

User approved volume balancing among the lanes for turning movement.

Movement	EBL	EBT	EBR	WBL	WBT	WBR	NBL	NBT	NBR	SBL	SBT	SBR
Lane Configurations												
Volume (veh/h)	98	1445	604	0	1293	553	324	56	821	294	2	151
Number	5	2	12	1	6	16	3	8	18	7	4	14
Initial Q (Qb), veh	0	0	0	0	0	0	0	0	0	0	0	0
Ped-Bike Adj(A_pbT)	1.00		1.00	1.00		1.00	1.00		1.00	1.00		0.98
Parking Bus, Adj	1.00	1.00	1.00	1.00	1.00	1.00	1.00	1.00	1.00	1.00	1.00	1.00
Adj Sat Flow, veh/h/ln	1863	1863	1863	0	1863	1863	1863	1863	1863	1863	1900	1863
Adj Flow Rate, veh/h	102	1505	0	0	1347	576	379	0	0	306	2	157
Adj No. of Lanes	1	3	1	0	3	1	2	0	1	2	0	1
Peak Hour Factor	0.96	0.96	0.96	0.96	0.96	0.96	0.96	0.96	0.96	0.96	0.96	0.96
Percent Heavy Veh, %	2	2	2	0	2	2	2	2	2	2	2	2
Cap, veh/h	192	2045	637	0	1339	417	448	0	200	430	0	194
Arrive On Green	0.04	0.13	0.00	0.00	0.26	0.26	0.13	0.00	0.00	0.13	0.13	0.13
Sat Flow, veh/h	1774	5085	1583	0	5253	1583	3548	0	1583	3442	0	1553
Grp Volume(v), veh/h	102	1505	0	0	1347	576	379	0	0	306	0	157
Grp Sat Flow(s),veh/h/ln	1774	1695	1583	0	1695	1583	1774	0	1583	1721	0	1553
Q Serve(g_s), s	7.7	38.7	0.0	0.0	35.8	35.8	14.2	0.0	0.0	11.6	0.0	13.4
Cycle Q Clear(g_c), s	7.7	38.7	0.0	0.0	35.8	35.8	14.2	0.0	0.0	11.6	0.0	13.4
Prop In Lane	1.00		1.00	0.00		1.00	1.00		1.00	1.00		1.00
Lane Grp Cap(c), veh/h	192	2045	637	0	1339	417	448	0	200	430	0	194
V/C Ratio(X)	0.53	0.74	0.00	0.00	1.01	1.38	0.85	0.00	0.00	0.71	0.00	0.81
Avail Cap(c_a), veh/h	196	2057	640	0	1339	417	663	0	296	997	0	450
HCM Platoon Ratio	0.33	0.33	0.33	1.00	1.00	1.00	1.00	1.00	1.00	1.00	1.00	1.00
Upstream Filter(I)	0.66	0.66	0.00	0.00	0.25	0.25	1.00	0.00	0.00	1.00	0.00	1.00
Uniform Delay (d), s/veh	62.2	52.0	0.0	0.0	50.1	50.1	58.1	0.0	0.0	57.1	0.0	57.9
Incr Delay (d2), s/veh	1.7	0.9	0.0	0.0	13.8	175.7	6.6	0.0	0.0	2.2	0.0	7.7
Initial Q Delay(d3),s/veh	0.0	0.0	0.0	0.0	0.0	0.0	0.0	0.0	0.0	0.0	0.0	0.0
%ile BackOfQ(50%),veh/ln	3.9	18.4	0.0	0.0	18.4	36.0	7.4	0.0	0.0	5.7	0.0	6.2
LnGrp Delay(d),s/veh	64.0	53.0	0.0	0.0	63.9	225.8	64.8	0.0	0.0	59.3	0.0	65.7
LnGrp LOS	E	D			F	F	E			E		E
Approach Vol, veh/h		1607			1923			379			463	
Approach Delay, s/veh		53.7			112.4			64.8			61.5	
Approach LOS		D			F			E			E	

Timer	1	2	3	4	5	6	7	8
Assigned Phs		2		4	5	6		8
Phs Duration (G+Y+Rc), s		61.7		21.6	18.9	42.8		21.8
Change Period (Y+Rc), s		7.0		4.6	* 4.2	7.0		4.6
Max Green Setting (Gmax), s		55.0		39.4	* 15	35.8		25.4
Max Q Clear Time (g_c+I1), s		40.7		15.4	9.7	37.8		16.2
Green Ext Time (p_c), s		13.2		1.6	0.1	0.0		1.0

Intersection Summary	
HCM 2010 Ctrl Delay	81.3
HCM 2010 LOS	F

Notes

User approved volume balancing among the lanes for turning movement.

Movement	EBL	EBT	WBT	WBR	SBL	SBR
Lane Configurations						
Volume (veh/h)	628	1932	1679	814	0	973
Number	5	2	6	16		
Initial Q (Qb), veh	0	0	0	0		
Ped-Bike Adj(A_pbT)	1.00			1.00		
Parking Bus, Adj	1.00	1.00	1.00	1.00		
Adj Sat Flow, veh/h/ln	1863	1863	1863	1863		
Adj Flow Rate, veh/h	675	2077	1805	0		
Adj No. of Lanes	1	3	2	1		
Peak Hour Factor	0.93	0.93	0.93	0.93		
Percent Heavy Veh, %	2	2	2	2		
Cap, veh/h	693	4910	1947	871		
Arrive On Green	0.39	0.97	0.55	0.00		
Sat Flow, veh/h	1774	5253	3632	1583		
Grp Volume(v), veh/h	675	2077	1805	0		
Grp Sat Flow(s),veh/h/ln	1774	1695	1770	1583		
Q Serve(g_s), s	59.9	3.8	74.9	0.0		
Cycle Q Clear(g_c), s	59.9	3.8	74.9	0.0		
Prop In Lane	1.00			1.00		
Lane Grp Cap(c), veh/h	693	4910	1947	871		
V/C Ratio(X)	0.97	0.42	0.93	0.00		
Avail Cap(c_a), veh/h	710	4910	1947	871		
HCM Platoon Ratio	1.00	1.00	1.00	1.00		
Upstream Filter(I)	0.09	0.09	1.00	0.00		
Uniform Delay (d), s/veh	48.0	0.2	33.0	0.0		
Incr Delay (d2), s/veh	5.5	0.0	9.2	0.0		
Initial Q Delay(d3),s/veh	0.0	0.0	0.0	0.0		
%ile BackOfQ(50%),veh/ln	30.3	1.5	38.8	0.0		
LnGrp Delay(d),s/veh	53.5	0.2	42.2	0.0		
LnGrp LOS	D	A	D			
Approach Vol, veh/h		2752	1805			
Approach Delay, s/veh		13.3	42.2			
Approach LOS		B	D			

Timer	1	2	3	4	5	6	7	8
Assigned Phs		2			5	6		
Phs Duration (G+Y+Rc), s		160.0			66.5	93.5		
Change Period (Y+Rc), s		5.5			4.0	5.5		
Max Green Setting (Gmax), s		154.5			64.0	86.5		
Max Q Clear Time (g_c+I1), s		5.8			61.9	76.9		
Green Ext Time (p_c), s		116.9			0.6	9.4		

Intersection Summary	
HCM 2010 Ctrl Delay	24.7
HCM 2010 LOS	C

APPENDIX F

PEAK HOUR INTERSECTION ANALYSIS WORKSHEETS – EXISTING + CUMULATIVE PROJECTS

Movement	EBL	EBT	EBR	WBL	WBT	WBR	NBL	NBT	NBR	SBL	SBT	SBR
Lane Configurations												
Volume (veh/h)	42	46	81	28	110	60	203	1007	73	122	664	107
Number	7	4	14	3	8	18	5	2	12	1	6	16
Initial Q (Qb), veh	0	0	0	0	0	0	0	0	0	0	0	0
Ped-Bike Adj(A_pbT)	1.00		0.95	1.00		0.96	1.00		1.00	1.00		0.99
Parking Bus, Adj	1.00	1.00	1.00	1.00	1.00	1.00	1.00	1.00	1.00	1.00	1.00	1.00
Adj Sat Flow, veh/h/ln	1863	1863	1863	1863	1863	1863	1863	1863	1900	1863	1863	1863
Adj Flow Rate, veh/h	45	49	87	30	118	65	218	1083	78	131	714	115
Adj No. of Lanes	2	1	1	1	1	1	2	2	0	1	2	1
Peak Hour Factor	0.93	0.93	0.93	0.93	0.93	0.93	0.93	0.93	0.93	0.93	0.93	0.93
Percent Heavy Veh, %	2	2	2	2	2	2	2	2	2	2	2	2
Cap, veh/h	116	233	188	45	217	178	316	1572	113	166	1669	790
Arrive On Green	0.03	0.12	0.12	0.03	0.12	0.12	0.09	0.47	0.47	0.09	0.47	0.47
Sat Flow, veh/h	3442	1863	1505	1774	1863	1525	3442	3349	241	1774	3539	1564
Grp Volume(v), veh/h	45	49	87	30	118	65	218	572	589	131	714	115
Grp Sat Flow(s),veh/h/ln	1721	1863	1505	1774	1863	1525	1721	1770	1820	1774	1770	1564
Q Serve(g_s), s	0.9	1.6	3.7	1.1	4.1	2.7	4.2	17.3	17.4	4.9	9.1	2.7
Cycle Q Clear(g_c), s	0.9	1.6	3.7	1.1	4.1	2.7	4.2	17.3	17.4	4.9	9.1	2.7
Prop In Lane	1.00		1.00	1.00		1.00	1.00		0.13	1.00		1.00
Lane Grp Cap(c), veh/h	116	233	188	45	217	178	316	831	855	166	1669	790
V/C Ratio(X)	0.39	0.21	0.46	0.67	0.54	0.37	0.69	0.69	0.69	0.79	0.43	0.15
Avail Cap(c_a), veh/h	206	844	682	104	830	680	563	908	933	277	1794	846
HCM Platoon Ratio	1.00	1.00	1.00	1.00	1.00	1.00	1.00	1.00	1.00	1.00	1.00	1.00
Upstream Filter(I)	1.00	1.00	1.00	1.00	1.00	1.00	1.00	1.00	1.00	1.00	1.00	1.00
Uniform Delay (d), s/veh	32.4	26.9	27.8	33.1	28.5	27.9	30.1	14.2	14.2	30.3	12.0	9.0
Incr Delay (d2), s/veh	0.8	0.4	1.8	6.1	0.8	0.5	1.0	2.2	2.2	3.1	0.2	0.1
Initial Q Delay(d3),s/veh	0.0	0.0	0.0	0.0	0.0	0.0	0.0	0.0	0.0	0.0	0.0	0.0
%ile BackOfQ(50%),veh/ln	0.4	0.9	1.6	0.6	2.1	1.2	2.0	8.9	9.2	2.5	4.5	1.2
LnGrp Delay(d),s/veh	33.2	27.4	29.6	39.2	29.3	28.3	31.1	16.4	16.4	33.5	12.2	9.2
LnGrp LOS	C	C	C	D	C	C	C	B	B	C	B	A
Approach Vol, veh/h		181			213			1379			960	
Approach Delay, s/veh		29.9			30.4			18.7			14.8	
Approach LOS		C			C			B			B	

Timer	1	2	3	4	5	6	7	8
Assigned Phs	1	2	3	4	5	6	7	8
Phs Duration (G+Y+Rc), s	10.8	37.4	6.1	14.1	10.7	37.6	6.7	13.5
Change Period (Y+Rc), s	4.4	5.3	4.4	* 5.5	4.4	* 5.3	4.4	5.5
Max Green Setting (Gmax), s	10.7	35.1	4.0	* 31	11.2	* 35	4.1	30.5
Max Q Clear Time (g_c+I1), s	6.9	19.4	3.1	5.7	6.2	11.1	2.9	6.1
Green Ext Time (p_c), s	0.1	12.8	0.0	1.1	0.2	17.8	0.0	1.1

Intersection Summary	
HCM 2010 Ctrl Delay	19.0
HCM 2010 LOS	B

Notes

* HCM 2010 computational engine requires equal clearance times for the phases crossing the barrier.

Movement	EBL	EBT	EBR	WBL	WBT	WBR	NBL	NBT	NBR	SBL	SBT	SBR
Lane Configurations												
Volume (veh/h)	0	1038	71	365	241	0	0	0	0	305	0	652
Number	5	2	12	1	6	16				7	4	14
Initial Q (Qb), veh	0	0	0	0	0	0				0	0	0
Ped-Bike Adj(A_pbT)	1.00		1.00	1.00		1.00				1.00		1.00
Parking Bus, Adj	1.00	1.00	1.00	1.00	1.00	1.00				1.00	1.00	1.00
Adj Sat Flow, veh/h/ln	0	1863	1863	1863	1863	0				1900	1863	1863
Adj Flow Rate, veh/h	0	1070	73	376	248	0				314	0	0
Adj No. of Lanes	0	2	1	2	2	0				0	1	1
Peak Hour Factor	0.97	0.97	0.97	0.97	0.97	0.97				0.97	0.97	0.97
Percent Heavy Veh, %	0	2	2	2	2	0				2	2	2
Cap, veh/h	0	1856	830	456	2474	0				364	0	325
Arrive On Green	0.00	0.52	0.52	0.04	0.23	0.00				0.21	0.00	0.00
Sat Flow, veh/h	0	3632	1583	3442	3632	0				1774	0	1583
Grp Volume(v), veh/h	0	1070	73	376	248	0				314	0	0
Grp Sat Flow(s),veh/h/ln	0	1770	1583	1721	1770	0				1774	0	1583
Q Serve(g_s), s	0.0	20.6	2.3	10.8	5.5	0.0				17.1	0.0	0.0
Cycle Q Clear(g_c), s	0.0	20.6	2.3	10.8	5.5	0.0				17.1	0.0	0.0
Prop In Lane	0.00		1.00	1.00		0.00				1.00		1.00
Lane Grp Cap(c), veh/h	0	1856	830	456	2474	0				364	0	325
V/C Ratio(X)	0.00	0.58	0.09	0.82	0.10	0.00				0.86	0.00	0.00
Avail Cap(c_a), veh/h	0	1856	830	544	2474	0				539	0	481
HCM Platoon Ratio	1.00	1.00	1.00	0.33	0.33	1.00				1.00	1.00	1.00
Upstream Filter(I)	0.00	1.00	1.00	0.70	0.70	0.00				1.00	0.00	0.00
Uniform Delay (d), s/veh	0.0	16.2	11.9	46.7	13.7	0.0				38.4	0.0	0.0
Incr Delay (d2), s/veh	0.0	1.3	0.2	6.2	0.1	0.0				9.4	0.0	0.0
Initial Q Delay(d3),s/veh	0.0	0.0	0.0	0.0	0.0	0.0				0.0	0.0	0.0
%ile BackOfQ(50%),veh/ln	0.0	10.3	1.0	5.6	2.7	0.0				9.3	0.0	0.0
LnGrp Delay(d),s/veh	0.0	17.5	12.1	52.9	13.8	0.0				47.7	0.0	0.0
LnGrp LOS		B	B	D	B					D		
Approach Vol, veh/h		1143			624						314	
Approach Delay, s/veh		17.2			37.3						47.7	
Approach LOS		B			D						D	

Timer	1	2	3	4	5	6	7	8
Assigned Phs	1	2		4		6		
Phs Duration (G+Y+Rc), s	17.5	57.4		25.1		74.9		
Change Period (Y+Rc), s	* 4.2	5.0		4.6		5.0		
Max Green Setting (Gmax), s	* 16	40.0		30.4		60.0		
Max Q Clear Time (g_c+I1), s	12.8	22.6		19.1		7.5		
Green Ext Time (p_c), s	0.4	9.1		1.4		14.0		

Intersection Summary	
HCM 2010 Ctrl Delay	27.8
HCM 2010 LOS	C

Notes

* HCM 2010 computational engine requires equal clearance times for the phases crossing the barrier.

Movement	EBL	EBT	EBR	WBL	WBT	WBR	NBL	NBT	NBR	SBL	SBT	SBR
Lane Configurations												
Volume (veh/h)	783	560	0	0	510	523	96	3	201	0	0	0
Number	5	2	12	1	6	16	7	4	14			
Initial Q (Qb), veh	0	0	0	0	0	0	0	0	0			
Ped-Bike Adj(A_pbT)	1.00		1.00	1.00		0.98	1.00		1.00			
Parking Bus, Adj	1.00	1.00	1.00	1.00	1.00	1.00	1.00	1.00	1.00			
Adj Sat Flow, veh/h/ln	1863	1863	0	0	1863	1900	1900	1863	1863			
Adj Flow Rate, veh/h	824	589	0	0	537	551	101	3	212			
Adj No. of Lanes	2	2	0	0	2	0	0	1	1			
Peak Hour Factor	0.95	0.95	0.95	0.95	0.95	0.95	0.95	0.95	0.95			
Percent Heavy Veh, %	2	2	0	0	2	2	2	2	2			
Cap, veh/h	909	2708	0	0	812	714	231	7	212			
Arrive On Green	0.44	1.00	0.00	0.00	0.46	0.46	0.13	0.13	0.13			
Sat Flow, veh/h	3442	3632	0	0	1863	1556	1725	51	1583			
Grp Volume(v), veh/h	824	589	0	0	537	551	104	0	212			
Grp Sat Flow(s),veh/h/ln	1721	1770	0	0	1770	1556	1776	0	1583			
Q Serve(g_s), s	22.3	0.0	0.0	0.0	23.6	29.7	5.4	0.0	13.4			
Cycle Q Clear(g_c), s	22.3	0.0	0.0	0.0	23.6	29.7	5.4	0.0	13.4			
Prop In Lane	1.00		0.00	0.00		1.00	0.97		1.00			
Lane Grp Cap(c), veh/h	909	2708	0	0	812	714	238	0	212			
V/C Ratio(X)	0.91	0.22	0.00	0.00	0.66	0.77	0.44	0.00	1.00			
Avail Cap(c_a), veh/h	1094	2708	0	0	812	714	238	0	212			
HCM Platoon Ratio	1.67	1.67	1.00	1.00	1.00	1.00	1.00	1.00	1.00			
Upstream Filter(I)	0.71	0.71	0.00	0.00	0.83	0.83	1.00	0.00	1.00			
Uniform Delay (d), s/veh	26.8	0.0	0.0	0.0	21.0	22.7	39.8	0.0	43.3			
Incr Delay (d2), s/veh	7.1	0.1	0.0	0.0	3.5	6.7	1.3	0.0	61.5			
Initial Q Delay(d3),s/veh	0.0	0.0	0.0	0.0	0.0	0.0	0.0	0.0	0.0			
%ile BackOfQ(50%),veh/ln	11.4	0.0	0.0	0.0	12.3	14.0	2.7	0.0	14.6			
LnGrp Delay(d),s/veh	33.9	0.1	0.0	0.0	24.6	29.4	41.1	0.0	104.8			
LnGrp LOS	C	A			C	C	D		F			
Approach Vol, veh/h		1413			1088			316				
Approach Delay, s/veh		19.8			27.0			83.9				
Approach LOS		B			C			F				

Timer	1	2	3	4	5	6	7	8
Assigned Phs		2		4	5	6		
Phs Duration (G+Y+Rc), s		82.0		18.0	30.6	51.4		
Change Period (Y+Rc), s		5.5		4.6	* 4.2	5.5		
Max Green Setting (Gmax), s		76.5		13.4	* 32	40.5		
Max Q Clear Time (g_c+I1), s		2.0		15.4	24.3	31.7		
Green Ext Time (p_c), s		20.2		0.0	2.1	6.5		

Intersection Summary	
HCM 2010 Ctrl Delay	29.8
HCM 2010 LOS	C

Notes

* HCM 2010 computational engine requires equal clearance times for the phases crossing the barrier.

Movement	EBL	EBT	EBR	WBL	WBT	WBR	NBL	NBT	NBR	SBL	SBT	SBR
Lane Configurations												
Volume (veh/h)	431	59	341	10	24	11	388	195	31	18	134	477
Number	5	2	12	1	6	16	3	8	18	7	4	14
Initial Q (Qb), veh	0	0	0	0	0	0	0	0	0	0	0	0
Ped-Bike Adj(A_pbT)	1.00		1.00	1.00		1.00	1.00		1.00	1.00		1.00
Parking Bus, Adj	1.00	1.00	1.00	1.00	1.00	1.00	1.00	1.00	1.00	1.00	1.00	1.00
Adj Sat Flow, veh/h/ln	1863	1863	1863	1863	1863	1900	1863	1863	1900	1900	1863	1863
Adj Flow Rate, veh/h	463	63	367	11	26	12	438	180	33	19	406	338
Adj No. of Lanes	2	1	1	1	2	0	2	1	0	0	1	1
Peak Hour Factor	0.93	0.93	0.93	0.93	0.93	0.93	0.93	0.93	0.93	0.93	0.93	0.93
Percent Heavy Veh, %	2	2	2	2	2	2	2	2	2	2	2	2
Cap, veh/h	943	510	716	107	145	63	633	273	50	18	392	349
Arrive On Green	0.27	0.27	0.27	0.06	0.06	0.06	0.18	0.18	0.18	0.22	0.22	0.22
Sat Flow, veh/h	3442	1863	1583	1774	2411	1038	3548	1532	281	83	1776	1583
Grp Volume(v), veh/h	463	63	367	11	19	19	438	0	213	425	0	338
Grp Sat Flow(s),veh/h/ln	1721	1863	1583	1774	1770	1679	1774	0	1813	1859	0	1583
Q Serve(g_s), s	8.3	1.9	12.1	0.4	0.7	0.8	8.5	0.0	8.0	16.2	0.0	15.5
Cycle Q Clear(g_c), s	8.3	1.9	12.1	0.4	0.7	0.8	8.5	0.0	8.0	16.2	0.0	15.5
Prop In Lane	1.00		1.00	1.00		0.62	1.00		0.15	0.04		1.00
Lane Grp Cap(c), veh/h	943	510	716	107	107	101	633	0	323	410	0	349
V/C Ratio(X)	0.49	0.12	0.51	0.10	0.17	0.19	0.69	0.00	0.66	1.04	0.00	0.97
Avail Cap(c_a), veh/h	1359	736	908	435	434	412	1314	0	672	410	0	349
HCM Platoon Ratio	1.00	1.00	1.00	1.00	1.00	1.00	1.00	1.00	1.00	1.00	1.00	1.00
Upstream Filter(I)	1.00	1.00	1.00	1.00	1.00	1.00	1.00	0.00	1.00	1.00	0.00	1.00
Uniform Delay (d), s/veh	22.4	20.0	14.3	32.6	32.8	32.8	28.3	0.0	28.1	28.6	0.0	28.4
Incr Delay (d2), s/veh	0.8	0.2	1.1	0.4	0.8	0.9	1.4	0.0	2.3	54.2	0.0	39.5
Initial Q Delay(d3),s/veh	0.0	0.0	0.0	0.0	0.0	0.0	0.0	0.0	0.0	0.0	0.0	0.0
%ile BackOfQ(50%),veh/ln	4.0	1.0	7.3	0.2	0.4	0.4	4.3	0.0	4.2	14.4	0.0	10.6
LnGrp Delay(d),s/veh	23.1	20.2	15.4	33.0	33.5	33.7	29.7	0.0	30.4	82.8	0.0	67.8
LnGrp LOS	C	C	B	C	C	C	C		C	F		E
Approach Vol, veh/h		893			49			651			763	
Approach Delay, s/veh		19.8			33.5			29.9			76.2	
Approach LOS		B			C			C			E	

Timer	1	2	3	4	5	6	7	8
Assigned Phs		2		4		6		8
Phs Duration (G+Y+Rc), s		25.0		21.1		9.3		18.0
Change Period (Y+Rc), s		4.9		4.9		4.9		4.9
Max Green Setting (Gmax), s		29.0		16.2		18.0		27.2
Max Q Clear Time (g_c+I1), s		14.1		18.2		2.8		10.5
Green Ext Time (p_c), s		6.0		0.0		0.1		2.6

Intersection Summary	
HCM 2010 Ctrl Delay	41.1
HCM 2010 LOS	D

Notes

User approved volume balancing among the lanes for turning movement.

Movement	EBL	EBT	EBR	WBL	WBT	WBR	NBL	NBT	NBR	SBL	SBT	SBR
Lane Configurations												
Volume (veh/h)	21	5	25	63	4	13	13	649	17	4	378	39
Number	7	4	14	3	8	18	5	2	12	1	6	16
Initial Q (Qb), veh	0	0	0	0	0	0	0	0	0	0	0	0
Ped-Bike Adj(A_pbT)	1.00		1.00	1.00		1.00	1.00		1.00	1.00		1.00
Parking Bus, Adj	1.00	1.00	1.00	1.00	1.00	1.00	1.00	1.00	1.00	1.00	1.00	1.00
Adj Sat Flow, veh/h/ln	1900	1863	1900	1900	1863	1900	1863	1863	1900	1863	1863	1900
Adj Flow Rate, veh/h	23	5	27	69	4	14	14	713	19	4	415	43
Adj No. of Lanes	0	1	0	0	1	0	1	1	0	1	1	0
Peak Hour Factor	0.91	0.91	0.91	0.91	0.91	0.91	0.91	0.91	0.91	0.91	0.91	0.91
Percent Heavy Veh, %	2	2	2	2	2	2	2	2	2	2	2	2
Cap, veh/h	97	26	65	167	7	20	23	1355	36	8	1231	128
Arrive On Green	0.08	0.08	0.08	0.08	0.08	0.08	0.01	0.75	0.75	0.00	0.74	0.74
Sat Flow, veh/h	522	340	831	1223	89	251	1774	1806	48	1774	1660	172
Grp Volume(v), veh/h	55	0	0	87	0	0	14	0	732	4	0	458
Grp Sat Flow(s),veh/h/ln	1693	0	0	1563	0	0	1774	0	1854	1774	0	1832
Q Serve(g_s), s	0.0	0.0	0.0	2.0	0.0	0.0	0.7	0.0	14.7	0.2	0.0	7.8
Cycle Q Clear(g_c), s	2.7	0.0	0.0	4.7	0.0	0.0	0.7	0.0	14.7	0.2	0.0	7.8
Prop In Lane	0.42		0.49	0.79		0.16	1.00		0.03	1.00		0.09
Lane Grp Cap(c), veh/h	188	0	0	193	0	0	23	0	1391	8	0	1358
V/C Ratio(X)	0.29	0.00	0.00	0.45	0.00	0.00	0.60	0.00	0.53	0.53	0.00	0.34
Avail Cap(c_a), veh/h	761	0	0	729	0	0	79	0	1391	79	0	1358
HCM Platoon Ratio	1.00	1.00	1.00	1.00	1.00	1.00	1.00	1.00	1.00	1.00	1.00	1.00
Upstream Filter(I)	1.00	0.00	0.00	1.00	0.00	0.00	1.00	0.00	1.00	1.00	0.00	1.00
Uniform Delay (d), s/veh	39.5	0.0	0.0	40.3	0.0	0.0	44.2	0.0	4.6	44.7	0.0	4.0
Incr Delay (d2), s/veh	0.3	0.0	0.0	0.6	0.0	0.0	8.9	0.0	1.4	20.1	0.0	0.7
Initial Q Delay(d3),s/veh	0.0	0.0	0.0	0.0	0.0	0.0	0.0	0.0	0.0	0.0	0.0	0.0
%ile BackOfQ(50%),veh/ln	1.3	0.0	0.0	2.1	0.0	0.0	0.4	0.0	7.9	0.1	0.0	4.1
LnGrp Delay(d),s/veh	39.9	0.0	0.0	40.9	0.0	0.0	53.1	0.0	6.1	64.8	0.0	4.7
LnGrp LOS	D			D			D		A	E		A
Approach Vol, veh/h		55			87			746			462	
Approach Delay, s/veh		39.9			40.9			6.9			5.2	
Approach LOS		D			D			A			A	

Timer	1	2	3	4	5	6	7	8
Assigned Phs	1	2		4	5	6		8
Phs Duration (G+Y+Rc), s	4.8	73.3		11.9	5.6	72.5		11.9
Change Period (Y+Rc), s	4.4	* 5.8		4.9	4.4	5.8		4.9
Max Green Setting (Gmax), s	4.0	* 30		41.0	4.0	29.9		41.0
Max Q Clear Time (g_c+I1), s	2.2	16.7		4.7	2.7	9.8		6.7
Green Ext Time (p_c), s	0.0	8.2		0.5	0.0	10.6		0.5

Intersection Summary	
HCM 2010 Ctrl Delay	9.9
HCM 2010 LOS	A

Notes

* HCM 2010 computational engine requires equal clearance times for the phases crossing the barrier.

Movement	NBT	NBR	SBL	SBT	SWL	SWR
Lane Configurations						
Volume (veh/h)	583	699	0	358	468	4
Number	2	12	1	6	3	18
Initial Q (Qb), veh	0	0	0	0	0	0
Ped-Bike Adj(A_pbT)		1.00	1.00		1.00	1.00
Parking Bus, Adj	1.00	1.00	1.00	1.00	1.00	1.00
Adj Sat Flow, veh/h/ln	1863	1900	0	1863	1863	1900
Adj Flow Rate, veh/h	634	760	0	389	513	0
Adj No. of Lanes	2	0	0	2	2	1
Peak Hour Factor	0.92	0.92	0.92	0.92	0.92	0.92
Percent Heavy Veh, %	2	2	0	2	2	0
Cap, veh/h	852	763	0	1705	887	404
Arrive On Green	0.48	0.48	0.00	0.48	0.25	0.00
Sat Flow, veh/h	1863	1583	0	3725	3548	1615
Grp Volume(v), veh/h	634	760	0	389	513	0
Grp Sat Flow(s),veh/h/ln	1770	1583	0	1770	1774	1615
Q Serve(g_s), s	11.5	19.1	0.0	2.6	5.1	0.0
Cycle Q Clear(g_c), s	11.5	19.1	0.0	2.6	5.1	0.0
Prop In Lane		1.00	0.00		1.00	1.00
Lane Grp Cap(c), veh/h	852	763	0	1705	887	404
V/C Ratio(X)	0.74	1.00	0.00	0.23	0.58	0.00
Avail Cap(c_a), veh/h	852	763	0	1705	899	409
HCM Platoon Ratio	1.00	1.00	1.00	1.00	1.00	1.00
Upstream Filter(I)	1.00	1.00	0.00	1.00	1.00	0.00
Uniform Delay (d), s/veh	8.3	10.3	0.0	6.0	13.1	0.0
Incr Delay (d2), s/veh	5.8	31.8	0.0	0.3	0.9	0.0
Initial Q Delay(d3),s/veh	0.0	0.0	0.0	0.0	0.0	0.0
%ile BackOfQ(50%),veh/ln	6.8	14.8	0.0	1.3	2.5	0.0
LnGrp Delay(d),s/veh	14.2	42.1	0.0	6.3	14.0	0.0
LnGrp LOS	B	D		A	B	
Approach Vol, veh/h	1394			389	513	
Approach Delay, s/veh	29.4			6.3	14.0	
Approach LOS	C			A	B	

Timer	1	2	3	4	5	6	7	8
Assigned Phs		2				6		8
Phs Duration (G+Y+Rc), s		25.0				25.0		14.9
Change Period (Y+Rc), s		* 5.8				5.8		4.9
Max Green Setting (Gmax), s		* 19				10.0		10.1
Max Q Clear Time (g_c+I1), s		21.1				4.6		7.1
Green Ext Time (p_c), s		0.0				4.5		0.6

Intersection Summary	
HCM 2010 Ctrl Delay	22.1
HCM 2010 LOS	C

Notes

User approved volume balancing among the lanes for turning movement.

Movement	EBL	EBT	EBR	WBL	WBT	WBR	NBL	NBT	NBR	SBL	SBT	SBR
Lane Configurations												
Volume (veh/h)	24	11	42	4	14	575	130	678	10	442	350	45
Number	7	4	14	3	8	18	5	2	12	1	6	16
Initial Q (Qb), veh	0	0	0	0	0	0	0	0	0	0	0	0
Ped-Bike Adj(A_pbT)	1.00		1.00	1.00		1.00	1.00		1.00	1.00		1.00
Parking Bus, Adj	1.00	1.00	1.00	1.00	1.00	1.00	1.00	1.00	1.00	1.00	1.00	1.00
Adj Sat Flow, veh/h/ln	1863	1863	1900	1900	1863	1863	1863	1863	1900	1863	1863	1900
Adj Flow Rate, veh/h	26	12	46	0	0	639	141	737	11	480	380	49
Adj No. of Lanes	1	1	0	0	1	2	1	3	0	2	2	0
Peak Hour Factor	0.92	0.92	0.92	0.92	0.92	0.92	0.92	0.92	0.92	0.92	0.92	0.92
Percent Heavy Veh, %	2	2	2	2	2	2	2	2	2	2	2	2
Cap, veh/h	220	66	255	0	366	1133	170	2631	39	555	1814	232
Arrive On Green	0.20	0.20	0.20	0.00	0.00	0.20	0.10	0.51	0.51	0.16	0.57	0.57
Sat Flow, veh/h	786	338	1296	0	1863	3167	1774	5162	77	3442	3157	404
Grp Volume(v), veh/h	26	0	58	0	0	639	141	484	264	480	212	217
Grp Sat Flow(s),veh/h/ln	786	0	1634	0	1863	1583	1774	1695	1849	1721	1770	1791
Q Serve(g_s), s	3.0	0.0	3.3	0.0	0.0	17.9	8.6	9.0	9.0	15.0	6.4	6.5
Cycle Q Clear(g_c), s	3.0	0.0	3.3	0.0	0.0	17.9	8.6	9.0	9.0	15.0	6.4	6.5
Prop In Lane	1.00		0.79	0.00		1.00	1.00		0.04	1.00		0.23
Lane Grp Cap(c), veh/h	220	0	321	0	366	1133	170	1728	942	555	1017	1030
V/C Ratio(X)	0.12	0.00	0.18	0.00	0.00	0.56	0.83	0.28	0.28	0.87	0.21	0.21
Avail Cap(c_a), veh/h	316	0	521	0	594	1521	348	1728	942	895	1017	1030
HCM Platoon Ratio	1.00	1.00	1.00	1.00	1.00	1.00	1.00	1.00	1.00	1.00	1.00	1.00
Upstream Filter(I)	1.00	0.00	1.00	0.00	0.00	0.68	1.00	1.00	1.00	1.00	1.00	1.00
Uniform Delay (d), s/veh	36.7	0.0	36.8	0.0	0.0	28.4	48.8	15.4	15.4	45.0	11.3	11.3
Incr Delay (d2), s/veh	0.1	0.0	0.1	0.0	0.0	0.1	3.9	0.4	0.7	2.9	0.5	0.5
Initial Q Delay(d3),s/veh	0.0	0.0	0.0	0.0	0.0	0.0	0.0	0.0	0.0	0.0	0.0	0.0
%ile BackOfQ(50%),veh/ln	0.7	0.0	1.5	0.0	0.0	7.8	4.4	4.3	4.7	7.4	3.3	3.3
LnGrp Delay(d),s/veh	36.8	0.0	36.9	0.0	0.0	28.5	52.7	15.8	16.2	47.9	11.8	11.8
LnGrp LOS	D		D			C	D	B	B	D	B	B
Approach Vol, veh/h		84			639			889			909	
Approach Delay, s/veh		36.9			28.5			21.8			30.9	
Approach LOS		D			C			C			C	

Timer	1	2	3	4	5	6	7	8
Assigned Phs	1	2		4	5	6		8
Phs Duration (G+Y+Rc), s	22.1	61.4		26.5	15.0	68.5		26.5
Change Period (Y+Rc), s	4.4	* 5.3		4.9	4.4	5.3		4.9
Max Green Setting (Gmax), s	23.6	* 32		35.1	21.6	38.7		35.1
Max Q Clear Time (g_c+I1), s	11.0	11.0		5.3	10.6	8.5		19.9
Green Ext Time (p_c), s	0.8	8.2		1.9	0.1	9.5		1.8

Intersection Summary	
HCM 2010 Ctrl Delay	27.3
HCM 2010 LOS	C

Notes

User approved volume balancing among the lanes for turning movement.

Movement	WBL	WBR	NBT	NBR	SBL	SBT
Lane Configurations						
Volume (veh/h)	738	10	853	807	0	384
Number	3	18	2	12	1	6
Initial Q (Qb), veh	0	0	0	0	0	0
Ped-Bike Adj(A_pbT)	1.00	1.00		1.00	1.00	
Parking Bus, Adj	1.00	1.00	1.00	1.00	1.00	1.00
Adj Sat Flow, veh/h/ln	1863	1900	1863	1863	0	1863
Adj Flow Rate, veh/h	839	0	958	0	0	431
Adj No. of Lanes	2	1	2	1	0	2
Peak Hour Factor	0.89	0.89	0.89	0.89	0.89	0.89
Percent Heavy Veh, %	2	0	2	2	0	2
Cap, veh/h	1023	466	1605	718	0	1605
Arrive On Green	0.29	0.00	0.45	0.00	0.00	0.45
Sat Flow, veh/h	3548	1615	3632	1583	0	3725
Grp Volume(v), veh/h	839	0	958	0	0	431
Grp Sat Flow(s),veh/h/ln	1774	1615	1770	1583	0	1770
Q Serve(g_s), s	12.1	0.0	11.2	0.0	0.0	4.2
Cycle Q Clear(g_c), s	12.1	0.0	11.2	0.0	0.0	4.2
Prop In Lane	1.00	1.00		1.00	0.00	
Lane Grp Cap(c), veh/h	1023	466	1605	718	0	1605
V/C Ratio(X)	0.82	0.00	0.60	0.00	0.00	0.27
Avail Cap(c_a), veh/h	1181	537	1605	718	0	1605
HCM Platoon Ratio	1.00	1.00	1.00	1.00	1.00	1.00
Upstream Filter(I)	1.00	0.00	1.00	0.00	0.00	1.00
Uniform Delay (d), s/veh	18.2	0.0	11.3	0.0	0.0	9.4
Incr Delay (d2), s/veh	4.4	0.0	1.6	0.0	0.0	0.4
Initial Q Delay(d3),s/veh	0.0	0.0	0.0	0.0	0.0	0.0
%ile BackOfQ(50%),veh/ln	6.6	0.0	5.7	0.0	0.0	2.1
LnGrp Delay(d),s/veh	22.6	0.0	12.9	0.0	0.0	9.8
LnGrp LOS	C		B			A
Approach Vol, veh/h	839		958			431
Approach Delay, s/veh	22.6		12.9			9.8
Approach LOS	C		B			A

Timer	1	2	3	4	5	6	7	8
Assigned Phs		2				6		8
Phs Duration (G+Y+Rc), s		30.4				30.4		24.6
Change Period (Y+Rc), s		5.5				* 5.5		8.7
Max Green Setting (Gmax), s		22.5				* 23		18.3
Max Q Clear Time (g_c+I1), s		13.2				6.2		14.1
Green Ext Time (p_c), s		7.0				11.0		1.7

Intersection Summary	
HCM 2010 Ctrl Delay	16.0
HCM 2010 LOS	B

Notes

User approved volume balancing among the lanes for turning movement.

Movement	EBL	EBT	EBR	WBL	WBT	WBR	NBL	NBT	NBR	SBL	SBT	SBR
Lane Configurations												
Volume (veh/h)	352	140	26	232	272	155	27	662	139	62	484	299
Number	7	4	14	3	8	18	5	2	12	1	6	16
Initial Q (Qb), veh	0	0	0	0	0	0	0	0	0	0	0	0
Ped-Bike Adj(A_pbT)	1.00		1.00	1.00		1.00	1.00		1.00	1.00		1.00
Parking Bus, Adj	1.00	1.00	1.00	1.00	1.00	1.00	1.00	1.00	1.00	1.00	1.00	1.00
Adj Sat Flow, veh/h/ln	1863	1863	1900	1863	1863	1863	1863	1863	1900	1863	1863	1900
Adj Flow Rate, veh/h	308	322	31	200	430	185	32	788	165	74	576	356
Adj No. of Lanes	1	1	0	1	2	1	1	2	0	1	2	0
Peak Hour Factor	0.84	0.84	0.84	0.84	0.84	0.84	0.84	0.84	0.84	0.84	0.84	0.84
Percent Heavy Veh, %	2	2	2	2	2	2	2	2	2	2	2	2
Cap, veh/h	391	369	36	263	553	235	40	1165	244	94	905	559
Arrive On Green	0.22	0.22	0.22	0.15	0.15	0.15	0.02	0.40	0.40	0.05	0.43	0.43
Sat Flow, veh/h	1774	1673	161	1774	3725	1583	1774	2914	610	1774	2103	1300
Grp Volume(v), veh/h	308	0	353	200	430	185	32	478	475	74	485	447
Grp Sat Flow(s),veh/h/ln	1774	0	1834	1774	1863	1583	1774	1770	1755	1774	1770	1633
Q Serve(g_s), s	18.0	0.0	20.4	11.9	12.2	12.4	2.0	24.5	24.5	4.5	23.6	23.6
Cycle Q Clear(g_c), s	18.0	0.0	20.4	11.9	12.2	12.4	2.0	24.5	24.5	4.5	23.6	23.6
Prop In Lane	1.00		0.09	1.00		1.00	1.00		0.35	1.00		0.80
Lane Grp Cap(c), veh/h	391	0	404	263	553	235	40	707	701	94	761	703
V/C Ratio(X)	0.79	0.00	0.87	0.76	0.78	0.79	0.80	0.68	0.68	0.78	0.64	0.64
Avail Cap(c_a), veh/h	469	0	485	389	816	347	68	707	701	115	761	703
HCM Platoon Ratio	1.00	1.00	1.00	1.00	1.00	1.00	1.00	1.00	1.00	1.00	1.00	1.00
Upstream Filter(I)	0.64	0.00	0.64	1.00	1.00	1.00	1.00	1.00	1.00	1.00	1.00	1.00
Uniform Delay (d), s/veh	40.4	0.0	41.4	44.9	45.1	45.2	53.5	27.2	27.2	51.4	24.6	24.6
Incr Delay (d2), s/veh	4.8	0.0	9.6	2.3	1.4	3.8	12.3	5.1	5.2	20.0	4.0	4.4
Initial Q Delay(d3),s/veh	0.0	0.0	0.0	0.0	0.0	0.0	0.0	0.0	0.0	0.0	0.0	0.0
%ile BackOfQ(50%),veh/ln	9.3	0.0	11.5	6.0	6.4	5.7	1.1	13.0	12.9	2.7	12.3	11.4
LnGrp Delay(d),s/veh	45.2	0.0	51.0	47.2	46.5	49.0	65.8	32.3	32.4	71.4	28.6	29.0
LnGrp LOS	D		D	D	D	D	E	C	C	E	C	C
Approach Vol, veh/h		661			815			985			1006	
Approach Delay, s/veh		48.3			47.3			33.4			31.9	
Approach LOS		D			D			C			C	

Timer	1	2	3	4	5	6	7	8
Assigned Phs	1	2		4	5	6		8
Phs Duration (G+Y+Rc), s	10.3	49.4		29.1	6.9	52.7		21.2
Change Period (Y+Rc), s	4.4	* 5.4		4.9	4.4	5.4		4.9
Max Green Setting (Gmax), s	7.1	* 31		29.1	4.2	33.0		24.1
Max Q Clear Time (g_c+I1), s	16.5	26.5		22.4	4.0	25.6		14.4
Green Ext Time (p_c), s	0.0	3.0		1.8	0.0	4.8		1.9

Intersection Summary	
HCM 2010 Ctrl Delay	39.1
HCM 2010 LOS	D

Notes

User approved volume balancing among the lanes for turning movement.

Movement	EBL	EBT	EBR	WBL	WBT	WBR	NBL	NBT	NBR	SBL	SBT	SBR
Lane Configurations												
Volume (veh/h)	439	687	30	5	728	45	95	16	4	10	0	44
Number	5	2	12	1	6	16	3	8	18	7	4	14
Initial Q (Qb), veh	0	0	0	0	0	0	0	0	0	0	0	0
Ped-Bike Adj(A_pbT)	1.00		1.00	1.00		1.00	1.00		1.00	1.00		1.00
Parking Bus, Adj	1.00	1.00	1.00	1.00	1.00	1.00	1.00	1.00	1.00	1.00	1.00	1.00
Adj Sat Flow, veh/h/ln	1863	1863	1900	1863	1863	1900	1900	1863	1900	1900	1863	1863
Adj Flow Rate, veh/h	523	818	36	6	867	54	113	19	5	12	0	52
Adj No. of Lanes	1	2	0	1	2	0	0	1	0	0	1	1
Peak Hour Factor	0.84	0.84	0.84	0.84	0.84	0.84	0.84	0.84	0.84	0.84	0.84	0.84
Percent Heavy Veh, %	2	2	2	2	2	2	2	2	2	2	2	2
Cap, veh/h	548	2538	112	11	1461	91	195	24	6	253	0	685
Arrive On Green	0.31	0.73	0.73	0.01	0.43	0.43	0.12	0.12	0.12	0.12	0.00	0.12
Sat Flow, veh/h	1774	3454	152	1774	3384	211	1097	196	49	1514	0	1583
Grp Volume(v), veh/h	523	419	435	6	453	468	137	0	0	12	0	52
Grp Sat Flow(s),veh/h/ln	1774	1770	1836	1774	1770	1826	1342	0	0	1514	0	1583
Q Serve(g_s), s	31.8	9.1	9.1	0.4	21.5	21.5	10.3	0.0	0.0	0.0	0.0	2.1
Cycle Q Clear(g_c), s	31.8	9.1	9.1	0.4	21.5	21.5	11.1	0.0	0.0	0.8	0.0	2.1
Prop In Lane	1.00		0.08	1.00		0.12	0.82		0.04	1.00		1.00
Lane Grp Cap(c), veh/h	548	1300	1349	11	764	788	226	0	0	253	0	685
V/C Ratio(X)	0.95	0.32	0.32	0.56	0.59	0.59	0.61	0.00	0.00	0.05	0.00	0.08
Avail Cap(c_a), veh/h	574	1300	1349	65	764	788	423	0	0	446	0	907
HCM Platoon Ratio	1.00	1.00	1.00	1.00	1.00	1.00	1.00	1.00	1.00	1.00	1.00	1.00
Upstream Filter(I)	1.00	1.00	1.00	1.00	1.00	1.00	1.00	0.00	0.00	1.00	0.00	1.00
Uniform Delay (d), s/veh	37.2	5.1	5.1	54.5	23.9	23.9	47.4	0.0	0.0	42.6	0.0	18.3
Incr Delay (d2), s/veh	25.5	0.7	0.6	15.5	3.4	3.3	1.0	0.0	0.0	0.0	0.0	0.0
Initial Q Delay(d3),s/veh	0.0	0.0	0.0	0.0	0.0	0.0	0.0	0.0	0.0	0.0	0.0	0.0
%ile BackOfQ(50%),veh/ln	19.4	4.5	4.7	0.2	11.2	11.5	4.1	0.0	0.0	0.3	0.0	0.9
LnGrp Delay(d),s/veh	62.7	5.7	5.7	70.0	27.2	27.1	48.4	0.0	0.0	42.6	0.0	18.3
LnGrp LOS	E	A	A	E	C	C	D			D		B
Approach Vol, veh/h		1377			927			137			64	
Approach Delay, s/veh		27.4			27.5			48.4			22.9	
Approach LOS		C			C			D			C	

Timer	1	2	3	4	5	6	7	8
Assigned Phs	1	2		4	5	6		8
Phs Duration (G+Y+Rc), s	5.1	86.4		18.5	38.4	53.1		18.5
Change Period (Y+Rc), s	4.4	* 5.6		4.9	4.4	5.6		4.9
Max Green Setting (Gmax), s	4.6	* 63		29.0	35.6	30.5		29.0
Max Q Clear Time (g_c+I1), s	2.4	11.1		4.1	33.8	23.5		13.1
Green Ext Time (p_c), s	0.0	40.5		0.6	0.2	6.6		0.5

Intersection Summary	
HCM 2010 Ctrl Delay	28.4
HCM 2010 LOS	C

Notes

* HCM 2010 computational engine requires equal clearance times for the phases crossing the barrier.

Intersection	
Int Delay, s/veh	1.6

Movement	EBT	EBR	WBL	WBT	NBL	NBR
Vol, veh/h	588	15	29	647	41	32
Conflicting Peds, #/hr	0	18	0	0	0	0
Sign Control	Free	Free	Free	Free	Stop	Stop
RT Channelized	-	None	-	None	-	None
Storage Length	-	-	100	-	0	-
Veh in Median Storage, #	0	-	-	0	0	-
Grade, %	0	-	-	0	0	-
Peak Hour Factor	84	84	84	84	84	84
Heavy Vehicles, %	2	2	2	2	2	2
Mvmt Flow	700	18	35	770	49	38

Major/Minor	Major1		Major2		Minor1	
Conflicting Flow All	0	0	718	0	1163	359
Stage 1	-	-	-	-	709	-
Stage 2	-	-	-	-	454	-
Critical Hdwy	-	-	4.14	-	6.84	6.94
Critical Hdwy Stg 1	-	-	-	-	5.84	-
Critical Hdwy Stg 2	-	-	-	-	5.84	-
Follow-up Hdwy	-	-	2.22	-	3.52	3.32
Pot Cap-1 Maneuver	-	-	879	-	188	638
Stage 1	-	-	-	-	449	-
Stage 2	-	-	-	-	606	-
Platoon blocked, %	-	-		-		
Mov Cap-1 Maneuver	-	-	879	-	178	638
Mov Cap-2 Maneuver	-	-	-	-	178	-
Stage 1	-	-	-	-	449	-
Stage 2	-	-	-	-	573	-

Approach	EB	WB	NB
HCM Control Delay, s	0	0.4	25.6
HCM LOS			D

Minor Lane/Major Mvmt	NBLn1	EBT	EBR	WBL	WBT
Capacity (veh/h)	260	-	-	879	-
HCM Lane V/C Ratio	0.334	-	-	0.039	-
HCM Control Delay (s)	25.6	-	-	9.3	-
HCM Lane LOS	D	-	-	A	-
HCM 95th %tile Q(veh)	1.4	-	-	0.1	-

Movement	EBL	EBT	EBR	WBL	WBT	WBR	NBL	NBT	NBR	SBL	SBT	SBR
Lane Configurations												
Volume (veh/h)	224	484	44	24	682	205	167	14	102	19	5	35
Number	5	2	12	1	6	16	3	8	18	7	4	14
Initial Q (Qb), veh	0	0	0	0	0	0	0	0	0	0	0	0
Ped-Bike Adj(A_pbT)	1.00		0.97	1.00		0.98	1.00		0.98	1.00		0.88
Parking Bus, Adj	1.00	1.00	1.00	1.00	1.00	1.00	1.00	1.00	1.00	1.00	1.00	1.00
Adj Sat Flow, veh/h/ln	1863	1863	1900	1863	1863	1863	1863	1863	1900	1863	1863	1863
Adj Flow Rate, veh/h	264	569	52	28	802	241	196	16	120	14	17	41
Adj No. of Lanes	1	2	0	1	2	1	1	1	0	1	1	1
Peak Hour Factor	0.85	0.85	0.85	0.85	0.85	0.85	0.85	0.85	0.85	0.85	0.85	0.85
Percent Heavy Veh, %	2	2	2	2	2	2	2	2	2	2	2	2
Cap, veh/h	284	1792	163	343	1231	837	229	24	181	331	348	260
Arrive On Green	0.05	0.18	0.18	0.11	0.11	0.11	0.13	0.13	0.13	0.19	0.19	0.19
Sat Flow, veh/h	1774	3271	298	798	3539	1557	1774	187	1402	1774	1863	1393
Grp Volume(v), veh/h	264	307	314	28	802	241	196	0	136	14	17	41
Grp Sat Flow(s),veh/h/ln	1774	1770	1800	798	1770	1557	1774	0	1589	1774	1863	1393
Q Serve(g_s), s	16.3	16.6	16.7	3.5	23.8	11.3	11.9	0.0	9.0	0.7	0.8	2.7
Cycle Q Clear(g_c), s	16.3	16.6	16.7	3.5	23.8	11.3	11.9	0.0	9.0	0.7	0.8	2.7
Prop In Lane	1.00		0.17	1.00		1.00	1.00		0.88	1.00		1.00
Lane Grp Cap(c), veh/h	284	969	986	343	1231	837	229	0	205	331	348	260
V/C Ratio(X)	0.93	0.32	0.32	0.08	0.65	0.29	0.86	0.00	0.66	0.04	0.05	0.16
Avail Cap(c_a), veh/h	284	969	986	343	1231	837	258	0	231	435	457	342
HCM Platoon Ratio	0.33	0.33	0.33	0.33	0.33	0.33	1.00	1.00	1.00	1.00	1.00	1.00
Upstream Filter(I)	1.00	1.00	1.00	1.00	1.00	1.00	1.00	0.00	1.00	1.00	1.00	1.00
Uniform Delay (d), s/veh	51.5	27.2	27.2	33.3	42.3	19.8	46.9	0.0	45.6	36.7	36.7	37.5
Incr Delay (d2), s/veh	35.2	0.9	0.9	0.1	1.3	0.2	21.7	0.0	5.9	0.0	0.0	0.1
Initial Q Delay(d3),s/veh	0.0	0.0	0.0	0.0	0.0	0.0	0.0	0.0	0.0	0.0	0.0	0.0
%ile BackOfQ(50%),veh/ln	10.8	8.4	8.6	0.8	11.9	6.9	7.2	0.0	4.3	0.4	0.4	1.0
LnGrp Delay(d),s/veh	86.6	28.0	28.1	33.4	43.6	20.0	68.6	0.0	51.5	36.7	36.7	37.6
LnGrp LOS	F	C	C	C	D	B	E		D	D	D	D
Approach Vol, veh/h		885			1071			332			72	
Approach Delay, s/veh		45.5			38.0			61.6			37.2	
Approach LOS		D			D			E			D	

Timer	1	2	3	4	5	6	7	8
Assigned Phs		2		4	5	6		8
Phs Duration (G+Y+Rc), s		66.4		25.4	22.0	44.4		18.2
Change Period (Y+Rc), s		* 6.1		4.9	4.4	6.1		4.0
Max Green Setting (Gmax), s		* 53		27.0	17.6	30.0		16.0
Max Q Clear Time (g_c+I1), s		18.7		4.7	18.3	25.8		13.9
Green Ext Time (p_c), s		16.4		0.1	0.0	3.4		0.3

Intersection Summary	
HCM 2010 Ctrl Delay	44.1
HCM 2010 LOS	D

Notes

User approved volume balancing among the lanes for turning movement.

Intersection	
Int Delay, s/veh	0.7

Movement	EBL	EBT	WBT	WBR	SBL	SBR
Vol, veh/h	27	500	857	12	8	34
Conflicting Peds, #/hr	0	0	0	3	0	0
Sign Control	Free	Free	Free	Free	Stop	Stop
RT Channelized	-	None	-	None	-	None
Storage Length	140	-	-	-	0	-
Veh in Median Storage, #	-	0	0	-	0	-
Grade, %	-	0	0	-	0	-
Peak Hour Factor	87	87	87	87	87	87
Heavy Vehicles, %	2	2	2	2	2	2
Mvmt Flow	31	575	985	14	9	39

Major/Minor	Major1		Major2		Minor2	
Conflicting Flow All	999	0	-	0	1341	499
Stage 1	-	-	-	-	992	-
Stage 2	-	-	-	-	349	-
Critical Hdwy	4.14	-	-	-	6.84	6.94
Critical Hdwy Stg 1	-	-	-	-	5.84	-
Critical Hdwy Stg 2	-	-	-	-	5.84	-
Follow-up Hdwy	2.22	-	-	-	3.52	3.32
Pot Cap-1 Maneuver	689	-	-	-	144	517
Stage 1	-	-	-	-	320	-
Stage 2	-	-	-	-	685	-
Platoon blocked, %		-	-	-		
Mov Cap-1 Maneuver	689	-	-	-	138	517
Mov Cap-2 Maneuver	-	-	-	-	138	-
Stage 1	-	-	-	-	320	-
Stage 2	-	-	-	-	654	-

Approach	EB	WB	SB
HCM Control Delay, s	0.5	0	17.4
HCM LOS			C

Minor Lane/Major Mvmt	EBL	EBT	WBT	WBR	SBLn1
Capacity (veh/h)	689	-	-	-	339
HCM Lane V/C Ratio	0.045	-	-	-	0.142
HCM Control Delay (s)	10.5	-	-	-	17.4
HCM Lane LOS	B	-	-	-	C
HCM 95th %tile Q(veh)	0.1	-	-	-	0.5

Movement	EBL	EBT	EBR	WBL	WBT	WBR	NBL	NBT	NBR	SBL	SBT	SBR
Lane Configurations												
Volume (veh/h)	12	487	47	120	662	18	148	16	292	36	43	59
Number	5	2	12	1	6	16	3	8	18	7	4	14
Initial Q (Qb), veh	0	0	0	0	0	0	0	0	0	0	0	0
Ped-Bike Adj(A_pbT)	1.00		0.98	1.00		0.97	1.00		0.97	1.00		1.00
Parking Bus, Adj	1.00	1.00	1.00	1.00	1.00	1.00	1.00	1.00	1.00	1.00	1.00	1.00
Adj Sat Flow, veh/h/ln	1863	1863	1863	1863	1863	1900	1863	1863	1863	1863	1863	1863
Adj Flow Rate, veh/h	15	601	58	148	817	22	183	20	360	44	53	73
Adj No. of Lanes	1	2	1	1	2	0	1	1	1	1	1	1
Peak Hour Factor	0.81	0.81	0.81	0.81	0.81	0.81	0.81	0.81	0.81	0.81	0.81	0.81
Percent Heavy Veh, %	2	2	2	2	2	2	2	2	2	2	2	2
Cap, veh/h	24	1569	689	176	1863	50	212	442	523	56	278	236
Arrive On Green	0.03	0.89	0.89	0.10	0.53	0.53	0.12	0.24	0.24	0.03	0.15	0.15
Sat Flow, veh/h	1774	3539	1553	1774	3518	95	1774	1863	1542	1774	1863	1583
Grp Volume(v), veh/h	15	601	58	148	411	428	183	20	360	44	53	73
Grp Sat Flow(s),veh/h/ln	1774	1770	1553	1774	1770	1843	1774	1863	1542	1774	1863	1583
Q Serve(g_s), s	0.9	3.2	0.5	9.0	15.7	15.7	11.1	0.9	22.2	2.7	2.7	4.5
Cycle Q Clear(g_c), s	0.9	3.2	0.5	9.0	15.7	15.7	11.1	0.9	22.2	2.7	2.7	4.5
Prop In Lane	1.00		1.00	1.00		0.05	1.00		1.00	1.00		1.00
Lane Grp Cap(c), veh/h	24	1569	689	176	937	976	212	442	523	56	278	236
V/C Ratio(X)	0.63	0.38	0.08	0.84	0.44	0.44	0.86	0.05	0.69	0.78	0.19	0.31
Avail Cap(c_a), veh/h	65	1569	689	219	937	976	252	586	642	108	440	374
HCM Platoon Ratio	2.00	2.00	2.00	1.00	1.00	1.00	1.00	1.00	1.00	1.00	1.00	1.00
Upstream Filter(I)	1.00	1.00	1.00	1.00	1.00	1.00	1.00	1.00	1.00	1.00	1.00	1.00
Uniform Delay (d), s/veh	53.3	3.6	3.5	48.7	15.9	15.9	47.5	32.3	31.6	52.9	41.0	41.7
Incr Delay (d2), s/veh	9.9	0.7	0.2	17.2	1.5	1.4	20.1	0.0	1.4	8.5	0.1	0.3
Initial Q Delay(d3),s/veh	0.0	0.0	0.0	0.0	0.0	0.0	0.0	0.0	0.0	0.0	0.0	0.0
%ile BackOfQ(50%),veh/ln	0.5	1.5	0.2	5.3	8.0	8.4	6.6	0.5	9.6	1.5	1.4	2.0
LnGrp Delay(d),s/veh	63.1	4.4	3.7	65.9	17.3	17.3	67.6	32.4	33.0	61.4	41.1	42.0
LnGrp LOS	E	A	A	E	B	B	E	C	C	E	D	D
Approach Vol, veh/h		674			987			563			170	
Approach Delay, s/veh		5.6			24.6			44.2			46.7	
Approach LOS		A			C			D			D	

Timer	1	2	3	4	5	6	7	8
Assigned Phs	1	2	3	4	5	6	7	8
Phs Duration (G+Y+Rc), s	15.3	55.5	17.6	21.6	5.9	64.9	7.9	31.3
Change Period (Y+Rc), s	4.4	* 6.7	4.4	* 5.2	4.4	6.7	4.4	5.2
Max Green Setting (Gmax), s	13.6	* 35	15.6	* 26	4.0	44.0	6.7	34.6
Max Q Clear Time (g_c+I1), s	11.0	5.2	13.1	6.5	2.9	17.7	4.7	24.2
Green Ext Time (p_c), s	0.0	7.9	0.1	1.0	0.0	7.7	0.0	0.9

Intersection Summary	
HCM 2010 Ctrl Delay	25.4
HCM 2010 LOS	C

Notes

* HCM 2010 computational engine requires equal clearance times for the phases crossing the barrier.

Movement	EBL	EBT	EBR	WBL	WBT	WBR	NBL	NBT	NBR	SBL	SBT	SBR
Lane Configurations												
Volume (veh/h)	17	34	44	61	15	43	8	482	50	41	568	9
Number	7	4	14	3	8	18	5	2	12	1	6	16
Initial Q (Qb), veh	0	0	0	0	0	0	0	0	0	0	0	0
Ped-Bike Adj(A_pbT)	0.99		0.94	0.95		0.98	1.00		0.96	1.00		0.97
Parking Bus, Adj	1.00	1.00	1.00	1.00	1.00	1.00	1.00	1.00	1.00	1.00	1.00	1.00
Adj Sat Flow, veh/h/ln	1900	1863	1900	1900	1863	1900	1863	1863	1900	1863	1863	1900
Adj Flow Rate, veh/h	20	41	53	73	18	52	10	581	60	49	684	11
Adj No. of Lanes	0	1	0	0	1	0	1	2	0	1	2	0
Peak Hour Factor	0.83	0.83	0.83	0.83	0.83	0.83	0.83	0.83	0.83	0.83	0.83	0.83
Percent Heavy Veh, %	2	2	2	2	2	2	2	2	2	2	2	2
Cap, veh/h	78	141	149	195	57	109	17	1937	199	62	2229	36
Arrive On Green	0.20	0.20	0.20	0.20	0.20	0.20	0.01	0.60	0.60	0.07	1.00	1.00
Sat Flow, veh/h	156	702	746	673	283	547	1774	3226	332	1774	3563	57
Grp Volume(v), veh/h	114	0	0	143	0	0	10	318	323	49	340	355
Grp Sat Flow(s),veh/h/ln	1604	0	0	1503	0	0	1774	1770	1789	1774	1770	1850
Q Serve(g_s), s	0.0	0.0	0.0	1.4	0.0	0.0	0.5	7.9	7.9	2.4	0.0	0.0
Cycle Q Clear(g_c), s	5.3	0.0	0.0	6.7	0.0	0.0	0.5	7.9	7.9	2.4	0.0	0.0
Prop In Lane	0.18		0.46	0.51		0.36	1.00		0.19	1.00		0.03
Lane Grp Cap(c), veh/h	368	0	0	361	0	0	17	1062	1074	62	1107	1157
V/C Ratio(X)	0.31	0.00	0.00	0.40	0.00	0.00	0.57	0.30	0.30	0.79	0.31	0.31
Avail Cap(c_a), veh/h	595	0	0	565	0	0	110	1062	1074	189	1107	1157
HCM Platoon Ratio	1.00	1.00	1.00	1.00	1.00	1.00	1.00	1.00	1.00	2.00	2.00	2.00
Upstream Filter(I)	1.00	0.00	0.00	1.00	0.00	0.00	1.00	1.00	1.00	0.97	0.97	0.97
Uniform Delay (d), s/veh	30.9	0.0	0.0	31.4	0.0	0.0	44.4	8.8	8.8	41.5	0.0	0.0
Incr Delay (d2), s/veh	0.2	0.0	0.0	0.3	0.0	0.0	10.5	0.7	0.7	7.8	0.7	0.7
Initial Q Delay(d3),s/veh	0.0	0.0	0.0	0.0	0.0	0.0	0.0	0.0	0.0	0.0	0.0	0.0
%ile BackOfQ(50%),veh/ln	2.5	0.0	0.0	3.1	0.0	0.0	0.3	4.0	4.1	1.3	0.2	0.2
LnGrp Delay(d),s/veh	31.1	0.0	0.0	31.6	0.0	0.0	54.9	9.5	9.5	49.3	0.7	0.7
LnGrp LOS	C			C			D	A	A	D	A	A
Approach Vol, veh/h		114			143			651			744	
Approach Delay, s/veh		31.1			31.6			10.2			3.9	
Approach LOS		C			C			B			A	

Timer	1	2	3	4	5	6	7	8
Assigned Phs	1	2		4	5	6		8
Phs Duration (G+Y+Rc), s	7.6	59.5		22.9	5.3	61.8		22.9
Change Period (Y+Rc), s	4.4	* 5.5		4.9	4.4	5.5		4.9
Max Green Setting (Gmax), s	9.6	* 35		31.1	5.6	38.5		31.1
Max Q Clear Time (g_c+I1), s	1.4	9.9		7.3	2.5	2.0		8.7
Green Ext Time (p_c), s	0.0	14.2		1.0	0.0	17.6		1.0

Intersection Summary	
HCM 2010 Ctrl Delay	10.6
HCM 2010 LOS	B

Notes

* HCM 2010 computational engine requires equal clearance times for the phases crossing the barrier.

Movement	EBL	EBT	EBR	WBL	WBT	WBR	NBL	NBT	NBR	SBL	SBT	SBR
Lane Configurations												
Volume (veh/h)	93	90	92	35	53	32	68	458	29	59	514	36
Number	7	4	14	3	8	18	5	2	12	1	6	16
Initial Q (Qb), veh	0	0	0	0	0	0	0	0	0	0	0	0
Ped-Bike Adj(A_pbT)	0.99		0.97	0.99		0.97	1.00		0.96	1.00		0.95
Parking Bus, Adj	1.00	1.00	1.00	1.00	1.00	1.00	1.00	1.00	1.00	1.00	1.00	1.00
Adj Sat Flow, veh/h/ln	1863	1863	1900	1863	1863	1900	1863	1863	1900	1863	1863	1900
Adj Flow Rate, veh/h	104	101	103	39	60	36	76	515	33	66	578	40
Adj No. of Lanes	1	1	0	1	1	0	1	2	0	1	2	0
Peak Hour Factor	0.89	0.89	0.89	0.89	0.89	0.89	0.89	0.89	0.89	0.89	0.89	0.89
Percent Heavy Veh, %	2	2	2	2	2	2	2	2	2	2	2	2
Cap, veh/h	318	193	196	226	250	150	98	1884	120	84	1846	127
Arrive On Green	0.23	0.23	0.23	0.23	0.23	0.23	0.02	0.18	0.18	0.10	1.00	1.00
Sat Flow, veh/h	1276	831	847	1159	1077	646	1774	3367	215	1774	3346	231
Grp Volume(v), veh/h	104	0	204	39	0	96	76	270	278	66	305	313
Grp Sat Flow(s),veh/h/ln	1276	0	1678	1159	0	1723	1774	1770	1813	1774	1770	1808
Q Serve(g_s), s	6.5	0.0	9.6	2.7	0.0	4.1	3.8	11.8	11.9	3.3	0.0	0.0
Cycle Q Clear(g_c), s	10.6	0.0	9.6	12.3	0.0	4.1	3.8	11.8	11.9	3.3	0.0	0.0
Prop In Lane	1.00		0.50	1.00		0.38	1.00		0.12	1.00		0.13
Lane Grp Cap(c), veh/h	318	0	389	226	0	400	98	990	1014	84	976	997
V/C Ratio(X)	0.33	0.00	0.52	0.17	0.00	0.24	0.77	0.27	0.27	0.78	0.31	0.31
Avail Cap(c_a), veh/h	491	0	617	383	0	634	209	990	1014	209	976	997
HCM Platoon Ratio	1.00	1.00	1.00	1.00	1.00	1.00	0.33	0.33	0.33	2.00	2.00	2.00
Upstream Filter(I)	1.00	0.00	1.00	1.00	0.00	1.00	0.97	0.97	0.97	0.97	0.97	0.97
Uniform Delay (d), s/veh	32.4	0.0	30.2	35.6	0.0	28.1	43.6	21.0	21.0	40.3	0.0	0.0
Incr Delay (d2), s/veh	0.2	0.0	0.4	0.1	0.0	0.1	4.6	0.7	0.6	5.6	0.8	0.8
Initial Q Delay(d3),s/veh	0.0	0.0	0.0	0.0	0.0	0.0	0.0	0.0	0.0	0.0	0.0	0.0
%ile BackOfQ(50%),veh/ln	2.3	0.0	4.5	0.9	0.0	2.0	2.0	6.0	6.1	1.7	0.2	0.2
LnGrp Delay(d),s/veh	32.6	0.0	30.6	35.7	0.0	28.2	48.2	21.6	21.6	45.9	0.8	0.8
LnGrp LOS	C		C	D		C	D	C	C	D	A	A
Approach Vol, veh/h		308			135			624			684	
Approach Delay, s/veh		31.3			30.4			24.9			5.2	
Approach LOS		C			C			C			A	

Timer	1	2	3	4	5	6	7	8
Assigned Phs	1	2		4	5	6		8
Phs Duration (G+Y+Rc), s	8.7	55.5		25.8	9.4	54.8		25.8
Change Period (Y+Rc), s	4.4	5.2		4.9	4.4	* 5.2		4.9
Max Green Setting (Gmax), s	10.6	31.8		33.1	10.6	* 32		33.1
Max Q Clear Time (g_c+I1), s	5.3	13.9		12.6	5.8	2.0		14.3
Green Ext Time (p_c), s	0.0	7.6		1.4	0.0	9.4		1.4

Intersection Summary	
HCM 2010 Ctrl Delay	18.7
HCM 2010 LOS	B

Notes

* HCM 2010 computational engine requires equal clearance times for the phases crossing the barrier.

Movement	EBL	EBT	EBR	WBL	WBT	WBR	NBL	NBT	NBR	SBL	SBT	SBR
Lane Configurations												
Volume (veh/h)	116	93	45	43	110	231	51	551	39	146	523	34
Number	7	4	14	3	8	18	5	2	12	1	6	16
Initial Q (Qb), veh	0	0	0	0	0	0	0	0	0	0	0	0
Ped-Bike Adj(A_pbT)	0.96		0.97	0.99		0.92	1.00		0.97	1.00		0.97
Parking Bus, Adj	1.00	1.00	1.00	1.00	1.00	1.00	1.00	1.00	1.00	1.00	1.00	1.00
Adj Sat Flow, veh/h/ln	1863	1863	1900	1863	1863	1863	1863	1863	1900	1863	1863	1900
Adj Flow Rate, veh/h	127	102	49	47	121	254	56	605	43	160	575	37
Adj No. of Lanes	1	1	0	1	1	1	1	2	0	1	2	0
Peak Hour Factor	0.91	0.91	0.91	0.91	0.91	0.91	0.91	0.91	0.91	0.91	0.91	0.91
Percent Heavy Veh, %	2	2	2	2	2	2	2	2	2	2	2	2
Cap, veh/h	294	321	154	329	508	396	71	1538	109	195	1785	115
Arrive On Green	0.27	0.27	0.27	0.27	0.27	0.27	0.08	0.92	0.92	0.11	0.53	0.53
Sat Flow, veh/h	965	1179	566	1221	1863	1454	1774	3343	237	1774	3370	216
Grp Volume(v), veh/h	127	0	151	47	121	254	56	320	328	160	301	311
Grp Sat Flow(s),veh/h/ln	965	0	1745	1221	1863	1454	1774	1770	1811	1774	1770	1817
Q Serve(g_s), s	10.6	0.0	6.2	2.9	4.5	13.9	2.8	2.0	2.1	7.9	8.7	8.7
Cycle Q Clear(g_c), s	15.2	0.0	6.2	9.1	4.5	13.9	2.8	2.0	2.1	7.9	8.7	8.7
Prop In Lane	1.00		0.32	1.00		1.00	1.00		0.13	1.00		0.12
Lane Grp Cap(c), veh/h	294	0	476	329	508	396	71	814	833	195	937	962
V/C Ratio(X)	0.43	0.00	0.32	0.14	0.24	0.64	0.79	0.39	0.39	0.82	0.32	0.32
Avail Cap(c_a), veh/h	354	0	584	404	623	486	150	814	833	347	937	962
HCM Platoon Ratio	1.00	1.00	1.00	1.00	1.00	1.00	2.00	2.00	2.00	1.00	1.00	1.00
Upstream Filter(I)	1.00	0.00	1.00	1.00	1.00	1.00	0.97	0.97	0.97	0.58	0.58	0.58
Uniform Delay (d), s/veh	31.4	0.0	26.1	29.7	25.5	28.9	41.0	2.0	2.0	39.2	12.0	12.0
Incr Delay (d2), s/veh	0.4	0.0	0.1	0.1	0.1	1.0	6.7	1.4	1.4	1.9	0.5	0.5
Initial Q Delay(d3),s/veh	0.0	0.0	0.0	0.0	0.0	0.0	0.0	0.0	0.0	0.0	0.0	0.0
%ile BackOfQ(50%),veh/ln	2.9	0.0	3.0	1.0	2.3	5.6	1.5	1.2	1.2	4.0	4.3	4.5
LnGrp Delay(d),s/veh	31.7	0.0	26.2	29.8	25.6	29.8	47.7	3.4	3.4	41.1	12.5	12.5
LnGrp LOS	C		C	C	C	C	D	A	A	D	B	B
Approach Vol, veh/h		278			422			704			772	
Approach Delay, s/veh		28.7			28.6			6.9			18.5	
Approach LOS		C			C			A			B	

Timer	1	2	3	4	5	6	7	8
Assigned Phs	1	2		4	5	6		8
Phs Duration (G+Y+Rc), s	14.3	46.3		29.4	8.0	52.6		29.4
Change Period (Y+Rc), s	4.4	4.9		4.9	4.4	4.9		4.9
Max Green Setting (Gmax), s	17.6	28.1		30.1	7.6	38.1		30.1
Max Q Clear Time (g_c+I1), s	19.9	4.1		17.2	4.8	10.7		15.9
Green Ext Time (p_c), s	0.1	17.4		1.8	0.0	19.2		1.9

Intersection Summary	
HCM 2010 Ctrl Delay	18.0
HCM 2010 LOS	B

Movement	EBL	EBT	EBR	WBL	WBT	WBR	NBL	NBT	NBR	SBL	SBT	SBR
Lane Configurations												
Volume (veh/h)	130	438	212	368	484	192	241	580	378	101	469	103
Number	5	2	12	1	6	16	3	8	18	7	4	14
Initial Q (Qb), veh	0	0	0	0	0	0	0	0	0	0	0	0
Ped-Bike Adj(A_pbT)	1.00		0.97	1.00		0.98	1.00		0.96	1.00		0.88
Parking Bus, Adj	1.00	1.00	1.00	1.00	1.00	1.00	1.00	1.00	1.00	1.00	1.00	1.00
Adj Sat Flow, veh/h/ln	1863	1863	1863	1863	1863	1863	1863	1863	1863	1863	1863	1900
Adj Flow Rate, veh/h	141	476	230	400	526	209	262	630	411	110	510	112
Adj No. of Lanes	1	2	1	2	2	1	1	2	1	2	2	0
Peak Hour Factor	0.92	0.92	0.92	0.92	0.92	0.92	0.92	0.92	0.92	0.92	0.92	0.92
Percent Heavy Veh, %	2	2	2	2	2	2	2	2	2	2	2	2
Cap, veh/h	166	969	422	433	1083	476	287	1408	607	161	796	173
Arrive On Green	0.09	0.27	0.27	0.13	0.31	0.31	0.16	0.40	0.40	0.05	0.28	0.28
Sat Flow, veh/h	1774	3539	1541	3442	3539	1554	1774	3539	1526	3442	2812	612
Grp Volume(v), veh/h	141	476	230	400	526	209	262	630	411	110	319	303
Grp Sat Flow(s),veh/h/ln	1774	1770	1541	1721	1770	1554	1774	1770	1526	1721	1770	1654
Q Serve(g_s), s	9.7	14.0	15.8	14.3	15.0	13.4	18.0	16.2	27.5	3.9	19.6	19.9
Cycle Q Clear(g_c), s	9.7	14.0	15.8	14.3	15.0	13.4	18.0	16.2	27.5	3.9	19.6	19.9
Prop In Lane	1.00		1.00	1.00		1.00	1.00		1.00	1.00		0.37
Lane Grp Cap(c), veh/h	166	969	422	433	1083	476	287	1408	607	161	501	468
V/C Ratio(X)	0.85	0.49	0.54	0.92	0.49	0.44	0.91	0.45	0.68	0.68	0.64	0.65
Avail Cap(c_a), veh/h	166	969	422	433	1083	476	295	1408	607	230	501	468
HCM Platoon Ratio	1.00	1.00	1.00	1.00	1.00	1.00	1.00	1.00	1.00	1.00	1.00	1.00
Upstream Filter(I)	1.00	1.00	1.00	1.00	1.00	1.00	0.90	0.90	0.90	1.00	1.00	1.00
Uniform Delay (d), s/veh	55.3	37.8	38.4	53.6	35.1	34.5	51.1	27.3	30.8	58.2	38.9	39.0
Incr Delay (d2), s/veh	30.5	1.8	5.0	25.0	1.6	2.9	27.9	0.9	5.4	1.9	6.1	6.8
Initial Q Delay(d3),s/veh	0.0	0.0	0.0	0.0	0.0	0.0	0.0	0.0	0.0	0.0	0.0	0.0
%ile BackOfQ(50%),veh/ln	6.2	7.0	7.3	8.3	7.5	6.1	11.0	8.1	12.5	1.9	10.4	10.0
LnGrp Delay(d),s/veh	85.9	39.5	43.4	78.7	36.6	37.4	79.0	28.3	36.2	60.1	45.0	45.8
LnGrp LOS	F	D	D	E	D	D	E	C	D	E	D	D
Approach Vol, veh/h		847			1135			1303			732	
Approach Delay, s/veh		48.3			51.6			41.0			47.6	
Approach LOS		D			D			D			D	

Timer	1	2	3	4	5	6	7	8
Assigned Phs	1	2	3	4	5	6	7	8
Phs Duration (G+Y+Rc), s	20.0	39.3	24.4	40.3	16.0	43.3	10.2	54.5
Change Period (Y+Rc), s	4.4	5.3	4.4	5.2	4.4	5.3	4.4	* 5.2
Max Green Setting (Gmax), s	15.6	33.4	20.6	35.1	11.6	37.4	8.3	* 48
Max Q Clear Time (g_c+I1), s	16.3	17.8	20.0	21.9	11.7	17.0	5.9	29.5
Green Ext Time (p_c), s	0.0	10.4	0.0	10.6	0.0	12.5	0.0	13.9

Intersection Summary	
HCM 2010 Ctrl Delay	46.7
HCM 2010 LOS	D

Notes

* HCM 2010 computational engine requires equal clearance times for the phases crossing the barrier.

Movement	WBL	WBR	NBT	NBR	SBL	SBT
Lane Configurations						
Volume (veh/h)	245	156	1268	387	147	644
Number	3	18	2	12	1	6
Initial Q (Qb), veh	0	0	0	0	0	0
Ped-Bike Adj(A_pbT)	1.00	1.00		0.98	1.00	
Parking Bus, Adj	1.00	1.00	1.00	1.00	1.00	1.00
Adj Sat Flow, veh/h/ln	1863	1863	1863	1863	1863	1863
Adj Flow Rate, veh/h	292	147	1393	425	162	708
Adj No. of Lanes	2	1	2	1	2	2
Peak Hour Factor	0.91	0.91	0.91	0.91	0.91	0.91
Percent Heavy Veh, %	2	2	2	2	2	2
Cap, veh/h	444	198	2067	1101	255	2530
Arrive On Green	0.13	0.13	0.58	0.58	0.07	0.71
Sat Flow, veh/h	3548	1583	3632	1546	3442	3632
Grp Volume(v), veh/h	292	147	1393	425	162	708
Grp Sat Flow(s),veh/h/ln	1774	1583	1770	1546	1721	1770
Q Serve(g_s), s	6.1	6.9	20.9	8.5	3.5	5.5
Cycle Q Clear(g_c), s	6.1	6.9	20.9	8.5	3.5	5.5
Prop In Lane	1.00	1.00		1.00	1.00	
Lane Grp Cap(c), veh/h	444	198	2067	1101	255	2530
V/C Ratio(X)	0.66	0.74	0.67	0.39	0.64	0.28
Avail Cap(c_a), veh/h	1236	552	2067	1101	711	3033
HCM Platoon Ratio	1.00	1.00	1.00	1.00	1.00	1.00
Upstream Filter(I)	1.00	1.00	1.00	1.00	1.00	1.00
Uniform Delay (d), s/veh	32.3	32.7	11.1	4.5	34.9	3.9
Incr Delay (d2), s/veh	0.6	2.1	1.0	0.3	1.0	0.1
Initial Q Delay(d3),s/veh	0.0	0.0	0.0	0.0	0.0	0.0
%ile BackOfQ(50%),veh/ln	3.0	3.1	10.3	5.3	1.7	2.7
LnGrp Delay(d),s/veh	32.9	34.7	12.0	4.8	35.8	4.1
LnGrp LOS	C	C	B	A	D	A
Approach Vol, veh/h	439		1818			870
Approach Delay, s/veh	33.5		10.4			10.0
Approach LOS	C		B			A

Timer	1	2	3	4	5	6	7	8
Assigned Phs	1	2				6		8
Phs Duration (G+Y+Rc), s	10.1	51.4				61.6		15.9
Change Period (Y+Rc), s	4.4	6.2				* 6.2		6.2
Max Green Setting (Gmax), s	15.6	45.2				* 66		27.0
Max Q Clear Time (g_c+I1), s	15.5	22.9				7.5		8.9
Green Ext Time (p_c), s	0.2	20.4				47.9		0.8

Intersection Summary	
HCM 2010 Ctrl Delay	13.5
HCM 2010 LOS	B

Notes

User approved volume balancing among the lanes for turning movement.

Movement	EBL	EBT	WBT	WBR	SBL	SBR
Lane Configurations						
Volume (veh/h)	290	346	298	347	192	36
Number	5	2	6	16	7	14
Initial Q (Qb), veh	0	0	0	0	0	0
Ped-Bike Adj(A_pbT)	1.00			1.00	1.00	1.00
Parking Bus, Adj	1.00	1.00	1.00	1.00	1.00	1.00
Adj Sat Flow, veh/h/ln	1863	1863	1863	1863	1863	1863
Adj Flow Rate, veh/h	372	444	382	445	246	46
Adj No. of Lanes	1	2	2	1	2	1
Peak Hour Factor	0.78	0.78	0.78	0.78	0.78	0.78
Percent Heavy Veh, %	2	2	2	2	2	2
Cap, veh/h	430	2471	1355	797	428	191
Arrive On Green	0.24	0.70	0.38	0.38	0.12	0.12
Sat Flow, veh/h	1774	3632	3632	1583	3548	1583
Grp Volume(v), veh/h	372	444	382	445	246	46
Grp Sat Flow(s),veh/h/ln	1774	1770	1770	1583	1774	1583
Q Serve(g_s), s	12.1	2.6	4.5	11.7	3.9	1.6
Cycle Q Clear(g_c), s	12.1	2.6	4.5	11.7	3.9	1.6
Prop In Lane	1.00			1.00	1.00	1.00
Lane Grp Cap(c), veh/h	430	2471	1355	797	428	191
V/C Ratio(X)	0.87	0.18	0.28	0.56	0.57	0.24
Avail Cap(c_a), veh/h	902	3764	1729	965	890	397
HCM Platoon Ratio	1.00	1.00	1.00	1.00	1.00	1.00
Upstream Filter(I)	1.00	1.00	1.00	1.00	1.00	1.00
Uniform Delay (d), s/veh	21.9	3.1	12.8	10.3	25.0	24.0
Incr Delay (d2), s/veh	2.1	0.1	0.2	0.9	2.6	1.4
Initial Q Delay(d3),s/veh	0.0	0.0	0.0	0.0	0.0	0.0
%ile BackOfQ(50%),veh/ln	6.1	1.3	2.2	6.5	2.1	1.5
LnGrp Delay(d),s/veh	23.9	3.2	13.0	11.3	27.6	25.3
LnGrp LOS	C	A	B	B	C	C
Approach Vol, veh/h		816	827		292	
Approach Delay, s/veh		12.7	12.1		27.2	
Approach LOS		B	B		C	

Timer	1	2	3	4	5	6	7	8
Assigned Phs		2		4	5	6		
Phs Duration (G+Y+Rc), s		48.0		12.2	19.0	29.0		
Change Period (Y+Rc), s		6.0		4.9	4.4	* 6		
Max Green Setting (Gmax), s		64.0		15.1	30.6	* 29		
Max Q Clear Time (g_c+I1), s		4.6		5.9	14.1	13.7		
Green Ext Time (p_c), s		17.3		1.4	0.5	9.4		

Intersection Summary	
HCM 2010 Ctrl Delay	14.6
HCM 2010 LOS	B

Notes

User approved volume balancing among the lanes for turning movement.

Movement	EBL	EBT	EBR	WBL	WBT	WBR	NBL	NBT	NBR	SBL	SBT	SBR
Lane Configurations												
Volume (veh/h)	45	413	5	8	702	52	40	3	48	60	4	40
Number	5	2	12	1	6	16	3	8	18	7	4	14
Initial Q (Qb), veh	0	0	0	0	0	0	0	0	0	0	0	0
Ped-Bike Adj(A_pbT)	1.00		1.00	1.00		1.00	1.00		1.00	1.00		1.00
Parking Bus, Adj	1.00	1.00	1.00	1.00	1.00	1.00	1.00	1.00	1.00	1.00	1.00	1.00
Adj Sat Flow, veh/h/ln	1863	1863	1900	1863	1863	1900	1900	1863	1863	1863	1863	1900
Adj Flow Rate, veh/h	53	486	6	9	826	61	47	4	56	71	5	47
Adj No. of Lanes	1	2	0	1	2	0	0	1	1	1	1	0
Peak Hour Factor	0.85	0.85	0.85	0.85	0.85	0.85	0.85	0.85	0.85	0.85	0.85	0.85
Percent Heavy Veh, %	2	2	2	2	2	2	2	2	2	2	2	2
Cap, veh/h	67	2190	27	16	1949	144	256	18	233	227	23	214
Arrive On Green	0.04	0.61	0.61	0.01	0.58	0.58	0.15	0.15	0.15	0.15	0.15	0.15
Sat Flow, veh/h	1774	3580	44	1774	3342	247	1024	120	1583	1337	154	1452
Grp Volume(v), veh/h	53	240	252	9	437	450	51	0	56	71	0	52
Grp Sat Flow(s),veh/h/ln	1774	1770	1855	1774	1770	1819	1144	0	1583	1337	0	1607
Q Serve(g_s), s	2.0	4.0	4.0	0.3	9.0	9.0	2.0	0.0	2.1	3.4	0.0	1.9
Cycle Q Clear(g_c), s	2.0	4.0	4.0	0.3	9.0	9.0	3.9	0.0	2.1	7.2	0.0	1.9
Prop In Lane	1.00		0.02	1.00		0.14	0.92		1.00	1.00		0.90
Lane Grp Cap(c), veh/h	67	1082	1134	16	1032	1061	273	0	233	227	0	236
V/C Ratio(X)	0.79	0.22	0.22	0.55	0.42	0.42	0.19	0.00	0.24	0.31	0.00	0.22
Avail Cap(c_a), veh/h	312	1512	1584	151	1342	1380	762	0	795	702	0	807
HCM Platoon Ratio	1.00	1.00	1.00	1.00	1.00	1.00	1.00	1.00	1.00	1.00	1.00	1.00
Upstream Filter(I)	1.00	1.00	1.00	1.00	1.00	1.00	1.00	0.00	1.00	1.00	0.00	1.00
Uniform Delay (d), s/veh	31.5	5.8	5.8	32.5	7.6	7.6	26.2	0.0	24.9	28.9	0.0	24.8
Incr Delay (d2), s/veh	7.6	0.4	0.4	10.3	1.3	1.2	0.1	0.0	0.2	0.3	0.0	0.2
Initial Q Delay(d3),s/veh	0.0	0.0	0.0	0.0	0.0	0.0	0.0	0.0	0.0	0.0	0.0	0.0
%ile BackOfQ(50%),veh/ln	1.1	2.1	2.1	0.2	4.7	4.9	0.9	0.0	0.9	1.3	0.0	0.8
LnGrp Delay(d),s/veh	39.1	6.1	6.1	42.8	8.9	8.8	26.3	0.0	25.1	29.2	0.0	24.9
LnGrp LOS	D	A	A	D	A	A	C		C	C		C
Approach Vol, veh/h		545			896			107			123	
Approach Delay, s/veh		9.3			9.2			25.7			27.4	
Approach LOS		A			A			C			C	

Timer	1	2	3	4	5	6	7	8
Assigned Phs	1	2		4	5	6		8
Phs Duration (G+Y+Rc), s	5.0	46.3		14.6	6.9	44.4		14.6
Change Period (Y+Rc), s	4.4	* 6		4.9	4.4	6.0		4.9
Max Green Setting (Gmax), s	5.6	* 56		33.1	11.6	50.0		33.1
Max Q Clear Time (g_c+I1), s	2.3	6.0		9.2	4.0	11.0		5.9
Green Ext Time (p_c), s	0.0	32.7		0.6	0.0	27.4		0.6

Intersection Summary	
HCM 2010 Ctrl Delay	11.6
HCM 2010 LOS	B

Notes

* HCM 2010 computational engine requires equal clearance times for the phases crossing the barrier.

Movement	EBL	EBT	WBT	WBR	SBL	SBR
Lane Configurations						
Volume (veh/h)	184	386	658	387	195	112
Number	5	2	6	16	7	14
Initial Q (Qb), veh	0	0	0	0	0	0
Ped-Bike Adj(A_pbT)	1.00			0.97	1.00	1.00
Parking Bus, Adj	1.00	1.00	1.00	1.00	1.00	1.00
Adj Sat Flow, veh/h/ln	1863	1863	1863	1863	1863	1863
Adj Flow Rate, veh/h	209	439	748	440	222	127
Adj No. of Lanes	1	2	2	1	1	1
Peak Hour Factor	0.88	0.88	0.88	0.88	0.88	0.88
Percent Heavy Veh, %	2	2	2	2	2	2
Cap, veh/h	275	2245	1398	608	312	278
Arrive On Green	0.16	0.63	0.39	0.39	0.18	0.18
Sat Flow, veh/h	1774	3632	3632	1540	1774	1583
Grp Volume(v), veh/h	209	439	748	440	222	127
Grp Sat Flow(s),veh/h/ln	1774	1770	1770	1540	1774	1583
Q Serve(g_s), s	5.9	2.7	8.5	12.6	6.1	3.7
Cycle Q Clear(g_c), s	5.9	2.7	8.5	12.6	6.1	3.7
Prop In Lane	1.00			1.00	1.00	1.00
Lane Grp Cap(c), veh/h	275	2245	1398	608	312	278
V/C Ratio(X)	0.76	0.20	0.54	0.72	0.71	0.46
Avail Cap(c_a), veh/h	667	3814	2172	945	1160	1035
HCM Platoon Ratio	1.00	1.00	1.00	1.00	1.00	1.00
Upstream Filter(I)	1.00	1.00	1.00	1.00	1.00	1.00
Uniform Delay (d), s/veh	21.1	4.0	12.1	13.4	20.3	19.3
Incr Delay (d2), s/veh	1.6	0.0	0.1	0.6	3.0	1.2
Initial Q Delay(d3),s/veh	0.0	0.0	0.0	0.0	0.0	0.0
%ile BackOfQ(50%),veh/ln	3.0	1.3	4.1	10.3	3.3	3.4
LnGrp Delay(d),s/veh	22.7	4.0	12.2	14.0	23.3	20.4
LnGrp LOS	C	A	B	B	C	C
Approach Vol, veh/h		648	1188		349	
Approach Delay, s/veh		10.0	12.9		22.2	
Approach LOS		B	B		C	

Timer	1	2	3	4	5	6	7	8
Assigned Phs		2		4	5	6		
Phs Duration (G+Y+Rc), s		39.0		13.2	12.5	26.5		
Change Period (Y+Rc), s		* 5.9		4.0	4.4	5.9		
Max Green Setting (Gmax), s		* 56		34.1	19.6	32.0		
Max Q Clear Time (g_c+I1), s		4.7		8.1	7.9	14.6		
Green Ext Time (p_c), s		7.0		1.1	0.2	5.9		

Intersection Summary	
HCM 2010 Ctrl Delay	13.5
HCM 2010 LOS	B

Notes

* HCM 2010 computational engine requires equal clearance times for the phases crossing the barrier.

Movement	EBL	EBT	EBR	WBL	WBT	WBR	NBL	NBT	NBR	SBL	SBT	SBR
Lane Configurations												
Volume (veh/h)	0	626	101	155	1034	2	161	2	74	20	1	7
Number	5	2	12	1	6	16	3	8	18	7	4	14
Initial Q (Qb), veh	0	0	0	0	0	0	0	0	0	0	0	0
Ped-Bike Adj(A_pbT)	1.00		0.99	1.00		0.97	1.00		0.98	1.00		1.00
Parking Bus, Adj	1.00	1.00	1.00	1.00	1.00	1.00	1.00	1.00	1.00	1.00	1.00	1.00
Adj Sat Flow, veh/h/ln	1863	1863	1900	1863	1863	1900	1900	1863	1863	1900	1863	1900
Adj Flow Rate, veh/h	0	659	106	163	1088	2	169	2	78	21	1	7
Adj No. of Lanes	1	3	0	2	2	0	0	1	1	0	1	0
Peak Hour Factor	0.95	0.95	0.95	0.95	0.95	0.95	0.95	0.95	0.95	0.95	0.95	0.95
Percent Heavy Veh, %	2	2	2	2	2	2	2	2	2	2	2	2
Cap, veh/h	2	2776	441	223	2655	5	295	3	368	107	12	20
Arrive On Green	0.00	0.63	0.63	0.13	1.00	1.00	0.17	0.17	0.17	0.17	0.17	0.17
Sat Flow, veh/h	1774	4417	702	3442	3624	7	1352	16	1549	301	68	117
Grp Volume(v), veh/h	0	504	261	163	531	559	171	0	78	29	0	0
Grp Sat Flow(s),veh/h/ln	1774	1695	1729	1721	1770	1861	1368	0	1549	487	0	0
Q Serve(g_s), s	0.0	7.3	7.4	5.1	0.0	0.0	0.0	0.0	4.5	1.3	0.0	0.0
Cycle Q Clear(g_c), s	0.0	7.3	7.4	5.1	0.0	0.0	13.4	0.0	4.5	14.7	0.0	0.0
Prop In Lane	1.00		0.41	1.00		0.00	0.99		1.00	0.72		0.24
Lane Grp Cap(c), veh/h	2	2130	1086	223	1296	1363	298	0	368	139	0	0
V/C Ratio(X)	0.00	0.24	0.24	0.73	0.41	0.41	0.57	0.00	0.21	0.21	0.00	0.00
Avail Cap(c_a), veh/h	63	2130	1086	664	1296	1363	535	0	630	372	0	0
HCM Platoon Ratio	1.00	1.00	1.00	2.00	2.00	2.00	1.00	1.00	1.00	1.00	1.00	1.00
Upstream Filter(I)	0.00	0.96	0.96	0.91	0.91	0.91	1.00	0.00	1.00	1.00	0.00	0.00
Uniform Delay (d), s/veh	0.0	9.1	9.1	47.8	0.0	0.0	44.0	0.0	34.4	45.3	0.0	0.0
Incr Delay (d2), s/veh	0.0	0.3	0.5	1.6	0.9	0.8	0.9	0.0	0.2	0.4	0.0	0.0
Initial Q Delay(d3),s/veh	0.0	0.0	0.0	0.0	0.0	0.0	0.0	0.0	0.0	0.0	0.0	0.0
%ile BackOfQ(50%),veh/ln	0.0	3.4	3.6	2.4	0.3	0.3	5.1	0.0	2.0	0.9	0.0	0.0
LnGrp Delay(d),s/veh	0.0	9.3	9.6	49.4	0.9	0.8	45.0	0.0	34.6	45.7	0.0	0.0
LnGrp LOS		A	A	D	A	A	D		C	D		
Approach Vol, veh/h		765			1253			249			29	
Approach Delay, s/veh		9.4			7.2			41.7			45.7	
Approach LOS		A			A			D			D	

Timer	1	2	3	4	5	6	7	8
Assigned Phs	1	2		4	5	6		8
Phs Duration (G+Y+Rc), s	11.7	76.3		24.1	0.0	87.9		24.1
Change Period (Y+Rc), s	4.4	5.9		4.9	4.4	* 5.9		4.9
Max Green Setting (Gmax), s	21.6	37.1		38.1	4.0	* 55		38.1
Max Q Clear Time (g_c+I1), s	7.1	9.4		16.7	0.0	2.0		15.4
Green Ext Time (p_c), s	0.2	15.5		0.9	0.0	20.8		0.9

Intersection Summary	
HCM 2010 Ctrl Delay	12.2
HCM 2010 LOS	B

Notes

* HCM 2010 computational engine requires equal clearance times for the phases crossing the barrier.

Movement	EBL	EBT	EBR	WBL	WBT	WBR	NBL	NBT	NBR	SBL	SBT	SBR
Lane Configurations												
Volume (veh/h)	8	712	8	36	1062	0	4	0	15	0	0	0
Number	5	2	12	1	6	16	3	8	18			
Initial Q (Qb), veh	0	0	0	0	0	0	0	0	0			
Ped-Bike Adj(A_pbT)	1.00		1.00	1.00		1.00	1.00		1.00			
Parking Bus, Adj	1.00	1.00	1.00	1.00	1.00	1.00	1.00	1.00	1.00			
Adj Sat Flow, veh/h/ln	1863	1863	1900	1863	1863	0	1863	0	1863			
Adj Flow Rate, veh/h	9	858	10	43	1280	0	5	0	18			
Adj No. of Lanes	1	3	0	2	2	0	1	0	1			
Peak Hour Factor	0.92	0.83	0.83	0.83	0.83	0.92	0.83	0.92	0.83			
Percent Heavy Veh, %	2	2	2	2	2	0	2	0	2			
Cap, veh/h	15	4294	50	91	3008	0	32	0	29			
Arrive On Green	0.00	0.27	0.27	0.03	0.85	0.00	0.02	0.00	0.02			
Sat Flow, veh/h	1774	5182	60	3442	3632	0	1774	0	1583			
Grp Volume(v), veh/h	9	561	307	43	1280	0	5	0	18			
Grp Sat Flow(s),veh/h/ln	1774	1695	1852	1721	1770	0	1774	0	1583			
Q Serve(g_s), s	0.6	14.2	14.3	1.4	9.5	0.0	0.3	0.0	1.3			
Cycle Q Clear(g_c), s	0.6	14.2	14.3	1.4	9.5	0.0	0.3	0.0	1.3			
Prop In Lane	1.00		0.03	1.00		0.00	1.00		1.00			
Lane Grp Cap(c), veh/h	15	2809	1535	91	3008	0	32	0	29			
V/C Ratio(X)	0.58	0.20	0.20	0.47	0.43	0.00	0.15	0.00	0.62			
Avail Cap(c_a), veh/h	63	2809	1535	172	3008	0	491	0	438			
HCM Platoon Ratio	0.33	0.33	0.33	1.00	1.00	1.00	1.00	1.00	1.00			
Upstream Filter(I)	0.98	0.98	0.98	1.00	1.00	0.00	1.00	0.00	1.00			
Uniform Delay (d), s/veh	55.6	12.1	12.2	53.8	2.0	0.0	54.1	0.0	54.6			
Incr Delay (d2), s/veh	29.5	0.2	0.3	1.4	0.4	0.0	0.8	0.0	7.9			
Initial Q Delay(d3),s/veh	0.0	0.0	0.0	0.0	0.0	0.0	0.0	0.0	0.0			
%ile BackOfQ(50%),veh/ln	0.4	6.8	7.4	0.7	4.6	0.0	0.2	0.0	0.6			
LnGrp Delay(d),s/veh	85.2	12.3	12.4	55.2	2.4	0.0	54.9	0.0	62.5			
LnGrp LOS	F	B	B	E	A		D		E			
Approach Vol, veh/h		877			1323			23				
Approach Delay, s/veh		13.1			4.1			60.8				
Approach LOS		B			A			E				

Timer	1	2	3	4	5	6	7	8
Assigned Phs	1	2			5	6		8
Phs Duration (G+Y+Rc), s	7.4	98.2			5.0	100.6		6.4
Change Period (Y+Rc), s	4.4	5.4			4.0	* 5.4		4.4
Max Green Setting (Gmax), s	5.6	61.2			4.0	* 63		31.0
Max Q Clear Time (g_c+I1), s	3.4	16.3			2.6	11.5		3.3
Green Ext Time (p_c), s	0.0	28.0			0.0	30.5		0.0

Intersection Summary	
HCM 2010 Ctrl Delay	8.3
HCM 2010 LOS	A

Notes

* HCM 2010 computational engine requires equal clearance times for the phases crossing the barrier.

Movement	EBL	EBT	EBR	WBL	WBT	WBR	NBL	NBT	NBR	SBL	SBT	SBR
Lane Configurations												
Volume (veh/h)	2	665	8	197	1091	2	3	0	19	28	0	1
Number	5	2	12	1	6	16	3	8	18	7	4	14
Initial Q (Qb), veh	0	0	0	0	0	0	0	0	0	0	0	0
Ped-Bike Adj(A_pbT)	1.00		1.00	1.00		1.00	0.98		1.00	1.00		0.98
Parking Bus, Adj	1.00	1.00	1.00	1.00	1.00	1.00	1.00	1.00	1.00	1.00	1.00	1.00
Adj Sat Flow, veh/h/ln	1863	1863	1900	1863	1863	1900	1863	1863	1863	1863	1863	1900
Adj Flow Rate, veh/h	2	693	8	205	1136	2	3	0	20	29	0	1
Adj No. of Lanes	1	3	0	2	3	0	1	0	2	1	1	0
Peak Hour Factor	0.96	0.96	0.96	0.96	0.96	0.96	0.96	0.96	0.96	0.96	0.96	0.96
Percent Heavy Veh, %	2	2	2	2	2	2	2	2	2	2	2	2
Cap, veh/h	4	3876	45	270	4320	8	122	0	134	123	0	66
Arrive On Green	0.00	0.75	0.75	0.08	0.82	0.82	0.04	0.00	0.04	0.04	0.00	0.04
Sat Flow, veh/h	1774	5183	60	3442	5242	9	1381	0	3167	1386	0	1550
Grp Volume(v), veh/h	2	453	248	205	735	403	3	0	20	29	0	1
Grp Sat Flow(s),veh/h/ln	1774	1695	1852	1721	1695	1861	1381	0	1583	1386	0	1550
Q Serve(g_s), s	0.1	4.4	4.4	6.5	5.4	5.4	0.2	0.0	0.7	2.3	0.0	0.1
Cycle Q Clear(g_c), s	0.1	4.4	4.4	6.5	5.4	5.4	0.3	0.0	0.7	2.3	0.0	0.1
Prop In Lane	1.00		0.03	1.00		0.00	1.00		1.00	1.00		1.00
Lane Grp Cap(c), veh/h	4	2535	1385	270	2794	1534	122	0	134	123	0	66
V/C Ratio(X)	0.52	0.18	0.18	0.76	0.26	0.26	0.02	0.00	0.15	0.24	0.00	0.02
Avail Cap(c_a), veh/h	184	2535	1385	633	2794	1534	447	0	879	449	0	430
HCM Platoon Ratio	1.00	1.00	1.00	1.00	1.00	1.00	1.00	1.00	1.00	1.00	1.00	1.00
Upstream Filter(I)	1.00	1.00	1.00	0.80	0.80	0.80	1.00	0.00	1.00	1.00	0.00	1.00
Uniform Delay (d), s/veh	55.8	4.1	4.1	50.6	2.2	2.2	51.5	0.0	51.7	52.4	0.0	51.4
Incr Delay (d2), s/veh	35.6	0.2	0.3	1.3	0.2	0.3	0.0	0.0	0.2	0.4	0.0	0.0
Initial Q Delay(d3),s/veh	0.0	0.0	0.0	0.0	0.0	0.0	0.0	0.0	0.0	0.0	0.0	0.0
%ile BackOfQ(50%),veh/ln	0.1	2.1	2.3	3.2	2.5	2.8	0.1	0.0	0.3	0.9	0.0	0.0
LnGrp Delay(d),s/veh	91.4	4.3	4.4	51.9	2.4	2.5	51.6	0.0	51.9	52.8	0.0	51.4
LnGrp LOS	F	A	A	D	A	A	D		D	D		D
Approach Vol, veh/h		703			1343			23			30	
Approach Delay, s/veh		4.6			10.0			51.8			52.8	
Approach LOS		A			A			D			D	

Timer	1	2	3	4	5	6	7	8
Assigned Phs	1	2		4	5	6		8
Phs Duration (G+Y+Rc), s	13.2	89.2		9.7	4.6	97.7		9.7
Change Period (Y+Rc), s	4.4	5.4		4.9	4.4	* 5.4		4.9
Max Green Setting (Gmax), s	20.6	45.6		31.1	11.6	* 55		31.1
Max Q Clear Time (g_c+I1), s	8.5	6.4		4.3	2.1	7.4		2.7
Green Ext Time (p_c), s	0.3	20.2		0.1	0.0	22.0		0.1

Intersection Summary	
HCM 2010 Ctrl Delay	9.2
HCM 2010 LOS	A

Notes

User approved volume balancing among the lanes for turning movement.

Movement	EBL	EBT	EBR	WBL	WBT	WBR	NBL	NBT	NBR	SBL	SBT	SBR
Lane Configurations												
Volume (veh/h)	36	479	286	0	907	454	282	48	746	299	5	100
Number	5	2	12	1	6	16	3	8	18	7	4	14
Initial Q (Qb), veh	0	0	0	0	0	0	0	0	0	0	0	0
Ped-Bike Adj(A_pbT)	1.00		1.00	1.00		1.00	1.00		1.00	1.00		0.98
Parking Bus, Adj	1.00	1.00	1.00	1.00	1.00	1.00	1.00	1.00	1.00	1.00	1.00	1.00
Adj Sat Flow, veh/h/ln	1863	1863	1863	0	1863	1863	1863	1863	1863	1863	1900	1863
Adj Flow Rate, veh/h	40	526	0	0	997	499	348	0	0	329	5	110
Adj No. of Lanes	1	3	1	0	3	1	2	0	1	2	0	1
Peak Hour Factor	0.91	0.91	0.91	0.91	0.91	0.91	0.91	0.91	0.91	0.91	0.91	0.91
Percent Heavy Veh, %	2	2	2	0	2	2	2	2	2	2	2	2
Cap, veh/h	150	2035	634	0	1453	452	415	0	185	408	0	184
Arrive On Green	0.08	0.40	0.00	0.00	0.29	0.29	0.12	0.00	0.00	0.12	0.12	0.12
Sat Flow, veh/h	1774	5085	1583	0	5253	1583	3548	0	1583	3442	0	1552
Grp Volume(v), veh/h	40	526	0	0	997	499	348	0	0	329	0	110
Grp Sat Flow(s),veh/h/ln	1774	1695	1583	0	1695	1583	1774	0	1583	1721	0	1552
Q Serve(g_s), s	3.0	9.7	0.0	0.0	24.4	40.0	13.4	0.0	0.0	13.0	0.0	9.4
Cycle Q Clear(g_c), s	3.0	9.7	0.0	0.0	24.4	40.0	13.4	0.0	0.0	13.0	0.0	9.4
Prop In Lane	1.00		1.00	0.00		1.00	1.00		1.00	1.00		1.00
Lane Grp Cap(c), veh/h	150	2035	634	0	1453	452	415	0	185	408	0	184
V/C Ratio(X)	0.27	0.26	0.00	0.00	0.69	1.10	0.84	0.00	0.00	0.81	0.00	0.60
Avail Cap(c_a), veh/h	190	2150	670	0	1453	452	659	0	294	949	0	428
HCM Platoon Ratio	1.00	1.00	1.00	1.00	1.00	1.00	1.00	1.00	1.00	1.00	1.00	1.00
Upstream Filter(I)	0.99	0.99	0.00	0.00	0.78	0.78	1.00	0.00	0.00	1.00	0.00	1.00
Uniform Delay (d), s/veh	60.0	28.1	0.0	0.0	44.4	50.0	60.5	0.0	0.0	60.2	0.0	58.5
Incr Delay (d2), s/veh	0.9	0.1	0.0	0.0	2.1	68.7	5.5	0.0	0.0	3.8	0.0	3.1
Initial Q Delay(d3),s/veh	0.0	0.0	0.0	0.0	0.0	0.0	0.0	0.0	0.0	0.0	0.0	0.0
%ile BackOfQ(50%),veh/ln	1.5	4.5	0.0	0.0	11.7	26.1	6.9	0.0	0.0	6.4	0.0	4.2
LnGrp Delay(d),s/veh	60.9	28.2	0.0	0.0	46.5	118.7	66.0	0.0	0.0	64.0	0.0	61.6
LnGrp LOS	E	C			D	F	E			E		E
Approach Vol, veh/h		566			1496			348			439	
Approach Delay, s/veh		30.5			70.6			66.0			63.4	
Approach LOS		C			E			E			E	

Timer	1	2	3	4	5	6	7	8
Assigned Phs		2		4	5	6		8
Phs Duration (G+Y+Rc), s		63.0		21.2	16.0	47.0		21.0
Change Period (Y+Rc), s		7.0		4.6	* 4.2	7.0		4.6
Max Green Setting (Gmax), s		59.2		38.6	* 15	40.0		26.0
Max Q Clear Time (g_c+I1), s		11.7		15.0	5.0	42.0		15.4
Green Ext Time (p_c), s		17.8		1.5	0.0	0.0		0.9

Intersection Summary	
HCM 2010 Ctrl Delay	60.9
HCM 2010 LOS	E

Notes

User approved volume balancing among the lanes for turning movement.

Movement	EBL	EBT	WBT	WBR	SBL	SBR
Lane Configurations						
Volume (veh/h)	512	1017	1200	842	0	877
Number	5	2	6	16		
Initial Q (Qb), veh	0	0	0	0		
Ped-Bike Adj(A_pbT)	1.00			1.00		
Parking Bus, Adj	1.00	1.00	1.00	1.00		
Adj Sat Flow, veh/h/ln	1863	1863	1863	1863		
Adj Flow Rate, veh/h	545	1082	1277	0		
Adj No. of Lanes	1	3	2	1		
Peak Hour Factor	0.94	0.94	0.94	0.94		
Percent Heavy Veh, %	2	2	2	2		
Cap, veh/h	569	4910	2195	982		
Arrive On Green	0.32	0.97	0.62	0.00		
Sat Flow, veh/h	1774	5253	3632	1583		
Grp Volume(v), veh/h	545	1082	1277	0		
Grp Sat Flow(s),veh/h/ln	1774	1695	1770	1583		
Q Serve(g_s), s	48.2	1.5	34.3	0.0		
Cycle Q Clear(g_c), s	48.2	1.5	34.3	0.0		
Prop In Lane	1.00			1.00		
Lane Grp Cap(c), veh/h	569	4910	2195	982		
V/C Ratio(X)	0.96	0.22	0.58	0.00		
Avail Cap(c_a), veh/h	632	4910	2195	982		
HCM Platoon Ratio	1.00	1.00	1.00	1.00		
Upstream Filter(I)	0.34	0.34	1.00	0.00		
Uniform Delay (d), s/veh	53.3	0.1	18.1	0.0		
Incr Delay (d2), s/veh	11.9	0.0	1.1	0.0		
Initial Q Delay(d3),s/veh	0.0	0.0	0.0	0.0		
%ile BackOfQ(50%),veh/ln	25.5	0.6	17.0	0.0		
LnGrp Delay(d),s/veh	65.2	0.2	19.2	0.0		
LnGrp LOS	E	A	B			
Approach Vol, veh/h		1627	1277			
Approach Delay, s/veh		21.9	19.2			
Approach LOS		C	B			

Timer	1	2	3	4	5	6	7	8
Assigned Phs		2			5	6		
Phs Duration (G+Y+Rc), s		160.0			55.3	104.7		
Change Period (Y+Rc), s		5.5			4.0	5.5		
Max Green Setting (Gmax), s		154.5			57.0	93.5		
Max Q Clear Time (g_c+I1), s		3.5			50.2	36.3		
Green Ext Time (p_c), s		38.4			1.1	29.5		

Intersection Summary	
HCM 2010 Ctrl Delay	20.7
HCM 2010 LOS	C

Movement	EBL	EBT	EBR	WBL	WBT	WBR	NBL	NBT	NBR	SBL	SBT	SBR
Lane Configurations												
Volume (veh/h)	97	97	166	94	57	166	135	982	107	129	1197	185
Number	7	4	14	3	8	18	5	2	12	1	6	16
Initial Q (Qb), veh	0	0	0	0	0	0	0	0	0	0	0	0
Ped-Bike Adj(A_pbT)	1.00		0.96	1.00		0.97	1.00		1.00	1.00		0.99
Parking Bus, Adj	1.00	1.00	1.00	1.00	1.00	1.00	1.00	1.00	1.00	1.00	1.00	1.00
Adj Sat Flow, veh/h/ln	1863	1863	1863	1863	1863	1863	1863	1863	1900	1863	1863	1863
Adj Flow Rate, veh/h	102	102	175	99	60	175	142	1034	113	136	1260	195
Adj No. of Lanes	2	1	1	1	1	1	2	2	0	1	2	1
Peak Hour Factor	0.95	0.95	0.95	0.95	0.95	0.95	0.95	0.95	0.95	0.95	0.95	0.95
Percent Heavy Veh, %	2	2	2	2	2	2	2	2	2	2	2	2
Cap, veh/h	168	306	250	126	348	287	215	1373	150	169	1626	795
Arrive On Green	0.05	0.16	0.16	0.07	0.19	0.19	0.06	0.43	0.43	0.10	0.46	0.46
Sat Flow, veh/h	3442	1863	1519	1774	1863	1540	3442	3219	352	1774	3539	1564
Grp Volume(v), veh/h	102	102	175	99	60	175	142	568	579	136	1260	195
Grp Sat Flow(s),veh/h/ln	1721	1863	1519	1774	1863	1540	1721	1770	1801	1774	1770	1564
Q Serve(g_s), s	2.3	3.9	8.8	4.4	2.2	8.4	3.3	21.9	21.9	6.1	24.1	5.7
Cycle Q Clear(g_c), s	2.3	3.9	8.8	4.4	2.2	8.4	3.3	21.9	21.9	6.1	24.1	5.7
Prop In Lane	1.00		1.00	1.00		1.00	1.00		0.20	1.00		1.00
Lane Grp Cap(c), veh/h	168	306	250	126	348	287	215	755	768	169	1626	795
V/C Ratio(X)	0.61	0.33	0.70	0.79	0.17	0.61	0.66	0.75	0.75	0.80	0.78	0.25
Avail Cap(c_a), veh/h	299	716	584	147	699	578	222	755	768	196	1667	813
HCM Platoon Ratio	1.00	1.00	1.00	1.00	1.00	1.00	1.00	1.00	1.00	1.00	1.00	1.00
Upstream Filter(I)	1.00	1.00	1.00	1.00	1.00	1.00	1.00	1.00	1.00	1.00	1.00	1.00
Uniform Delay (d), s/veh	37.6	29.8	31.9	36.9	27.6	30.1	37.0	19.5	19.6	35.8	18.3	11.2
Incr Delay (d2), s/veh	1.3	0.6	3.6	17.5	0.1	0.8	5.3	4.5	4.4	16.2	2.5	0.2
Initial Q Delay(d3),s/veh	0.0	0.0	0.0	0.0	0.0	0.0	0.0	0.0	0.0	0.0	0.0	0.0
%ile BackOfQ(50%),veh/ln	1.2	2.1	3.9	2.8	1.1	3.6	1.7	11.5	11.7	3.7	12.3	2.5
LnGrp Delay(d),s/veh	39.0	30.4	35.4	54.4	27.7	30.9	42.3	24.0	24.0	52.0	20.8	11.4
LnGrp LOS	D	C	D	D	C	C	D	C	C	D	C	B
Approach Vol, veh/h		379			334			1289			1591	
Approach Delay, s/veh		35.0			37.3			26.0			22.3	
Approach LOS		D			D			C			C	

Timer	1	2	3	4	5	6	7	8
Assigned Phs	1	2	3	4	5	6	7	8
Phs Duration (G+Y+Rc), s	12.1	39.7	10.1	18.8	9.4	42.4	8.3	20.6
Change Period (Y+Rc), s	4.4	5.3	4.4	* 5.5	4.4	* 5.3	4.4	5.5
Max Green Setting (Gmax), s	8.9	34.2	6.7	* 31	5.2	* 38	7.0	30.3
Max Q Clear Time (g_c+I1), s	8.1	23.9	6.4	10.8	5.3	26.1	4.3	10.4
Green Ext Time (p_c), s	0.0	9.7	0.0	1.6	0.0	11.0	0.0	1.6

Intersection Summary	
HCM 2010 Ctrl Delay	26.4
HCM 2010 LOS	C

Notes

* HCM 2010 computational engine requires equal clearance times for the phases crossing the barrier.

Movement	EBL	EBT	EBR	WBL	WBT	WBR	NBL	NBT	NBR	SBL	SBT	SBR
Lane Configurations												
Volume (veh/h)	0	999	246	280	282	0	0	0	0	395	1	1229
Number	5	2	12	1	6	16				7	4	14
Initial Q (Qb), veh	0	0	0	0	0	0				0	0	0
Ped-Bike Adj(A_pbT)	1.00		1.00	1.00		1.00				1.00		1.00
Parking Bus, Adj	1.00	1.00	1.00	1.00	1.00	1.00				1.00	1.00	1.00
Adj Sat Flow, veh/h/ln	0	1863	1863	1863	1863	0				1900	1863	1863
Adj Flow Rate, veh/h	0	1041	256	292	294	0				411	1	0
Adj No. of Lanes	0	2	1	2	2	0				0	1	1
Peak Hour Factor	0.96	0.96	0.96	0.96	0.96	0.96				0.96	0.96	0.96
Percent Heavy Veh, %	0	2	2	2	2	0				2	2	2
Cap, veh/h	0	1751	783	370	2280	0				460	1	411
Arrive On Green	0.00	0.49	0.49	0.04	0.21	0.00				0.26	0.26	0.00
Sat Flow, veh/h	0	3632	1583	3442	3632	0				1770	4	1583
Grp Volume(v), veh/h	0	1041	256	292	294	0				412	0	0
Grp Sat Flow(s),veh/h/ln	0	1770	1583	1721	1770	0				1774	0	1583
Q Serve(g_s), s	0.0	21.1	9.7	8.4	6.7	0.0				22.4	0.0	0.0
Cycle Q Clear(g_c), s	0.0	21.1	9.7	8.4	6.7	0.0				22.4	0.0	0.0
Prop In Lane	0.00		1.00	1.00		0.00				1.00		1.00
Lane Grp Cap(c), veh/h	0	1751	783	370	2280	0				461	0	411
V/C Ratio(X)	0.00	0.59	0.33	0.79	0.13	0.00				0.89	0.00	0.00
Avail Cap(c_a), veh/h	0	1751	783	475	2280	0				575	0	513
HCM Platoon Ratio	1.00	1.00	1.00	0.33	0.33	1.00				1.00	1.00	1.00
Upstream Filter(I)	0.00	1.00	1.00	0.75	0.75	0.00				1.00	0.00	0.00
Uniform Delay (d), s/veh	0.0	18.1	15.2	47.1	16.7	0.0				35.7	0.0	0.0
Incr Delay (d2), s/veh	0.0	1.5	1.1	5.2	0.1	0.0				14.1	0.0	0.0
Initial Q Delay(d3),s/veh	0.0	0.0	0.0	0.0	0.0	0.0				0.0	0.0	0.0
%ile BackOfQ(50%),veh/ln	0.0	10.6	4.5	4.3	3.3	0.0				12.8	0.0	0.0
LnGrp Delay(d),s/veh	0.0	19.6	16.3	52.3	16.7	0.0				49.8	0.0	0.0
LnGrp LOS		B	B	D	B					D		
Approach Vol, veh/h		1297			586						412	
Approach Delay, s/veh		18.9			34.4						49.8	
Approach LOS		B			C						D	

Timer	1	2	3	4	5	6	7	8
Assigned Phs	1	2		4		6		
Phs Duration (G+Y+Rc), s	15.0	54.5		30.6		69.4		
Change Period (Y+Rc), s	* 4.2	5.0		4.6		5.0		
Max Green Setting (Gmax), s	* 14	40.0		32.4		58.0		
Max Q Clear Time (g_c+I1), s	10.4	23.1		24.4		8.7		
Green Ext Time (p_c), s	0.3	9.6		1.6		15.4		

Intersection Summary	
HCM 2010 Ctrl Delay	28.4
HCM 2010 LOS	C

Notes

* HCM 2010 computational engine requires equal clearance times for the phases crossing the barrier.

Movement	EBL	EBT	EBR	WBL	WBT	WBR	NBL	NBT	NBR	SBL	SBT	SBR
Lane Configurations												
Volume (veh/h)	825	569	0	0	341	427	221	0	444	0	0	0
Number	5	2	12	1	6	16	7	4	14			
Initial Q (Qb), veh	0	0	0	0	0	0	0	0	0			
Ped-Bike Adj(A_pbT)	1.00		1.00	1.00		0.98	1.00		1.00			
Parking Bus, Adj	1.00	1.00	1.00	1.00	1.00	1.00	1.00	1.00	1.00			
Adj Sat Flow, veh/h/ln	1863	1863	0	0	1863	1900	1900	1863	1863			
Adj Flow Rate, veh/h	887	612	0	0	367	459	238	0	477			
Adj No. of Lanes	2	2	0	0	2	0	0	1	1			
Peak Hour Factor	0.93	0.93	0.93	0.93	0.93	0.93	0.93	0.93	0.93			
Percent Heavy Veh, %	2	2	0	0	2	2	2	2	2			
Cap, veh/h	964	2283	0	0	571	499	451	0	402			
Arrive On Green	0.47	1.00	0.00	0.00	0.32	0.32	0.25	0.00	0.25			
Sat Flow, veh/h	3442	3632	0	0	1863	1544	1774	0	1583			
Grp Volume(v), veh/h	887	612	0	0	367	459	238	0	477			
Grp Sat Flow(s),veh/h/ln	1721	1770	0	0	1770	1544	1774	0	1583			
Q Serve(g_s), s	24.1	0.0	0.0	0.0	17.7	28.6	11.6	0.0	25.4			
Cycle Q Clear(g_c), s	24.1	0.0	0.0	0.0	17.7	28.6	11.6	0.0	25.4			
Prop In Lane	1.00		0.00	0.00		1.00	1.00		1.00			
Lane Grp Cap(c), veh/h	964	2283	0	0	571	499	451	0	402			
V/C Ratio(X)	0.92	0.27	0.00	0.00	0.64	0.92	0.53	0.00	1.19			
Avail Cap(c_a), veh/h	1094	2283	0	0	571	499	451	0	402			
HCM Platoon Ratio	1.67	1.67	1.00	1.00	1.00	1.00	1.00	1.00	1.00			
Upstream Filter(I)	0.72	0.72	0.00	0.00	0.85	0.85	1.00	0.00	1.00			
Uniform Delay (d), s/veh	25.6	0.0	0.0	0.0	28.9	32.6	32.1	0.0	37.3			
Incr Delay (d2), s/veh	8.8	0.2	0.0	0.0	4.7	22.0	1.2	0.0	106.2			
Initial Q Delay(d3),s/veh	0.0	0.0	0.0	0.0	0.0	0.0	0.0	0.0	0.0			
%ile BackOfQ(50%),veh/ln	12.5	0.1	0.0	0.0	9.4	15.3	5.8	0.0	31.3			
LnGrp Delay(d),s/veh	34.4	0.2	0.0	0.0	33.6	54.6	33.3	0.0	143.5			
LnGrp LOS	C	A			C	D	C		F			
Approach Vol, veh/h		1499			826			715				
Approach Delay, s/veh		20.4			45.3			106.8				
Approach LOS		C			D			F				

Timer	1	2	3	4	5	6	7	8
Assigned Phs		2		4	5	6		
Phs Duration (G+Y+Rc), s		70.0		30.0	32.2	37.8		
Change Period (Y+Rc), s		5.5		4.6	* 4.2	5.5		
Max Green Setting (Gmax), s		64.5		25.4	* 32	28.5		
Max Q Clear Time (g_c+I1), s		2.0		27.4	26.1	30.6		
Green Ext Time (p_c), s		14.9		0.0	1.9	0.0		

Intersection Summary	
HCM 2010 Ctrl Delay	47.5
HCM 2010 LOS	D

Notes

* HCM 2010 computational engine requires equal clearance times for the phases crossing the barrier.

Movement	EBL	EBT	EBR	WBL	WBT	WBR	NBL	NBT	NBR	SBL	SBT	SBR
Lane Configurations												
Volume (veh/h)	472	55	546	25	66	30	447	194	17	17	177	319
Number	5	2	12	1	6	16	3	8	18	7	4	14
Initial Q (Qb), veh	0	0	0	0	0	0	0	0	0	0	0	0
Ped-Bike Adj(A_pbT)	1.00		1.00	1.00		1.00	1.00		1.00	1.00		1.00
Parking Bus, Adj	1.00	1.00	1.00	1.00	1.00	1.00	1.00	1.00	1.00	1.00	1.00	1.00
Adj Sat Flow, veh/h/ln	1863	1863	1863	1863	1863	1900	1863	1863	1900	1900	1863	1863
Adj Flow Rate, veh/h	519	60	600	27	73	33	491	213	19	19	298	282
Adj No. of Lanes	2	1	1	1	2	0	2	1	0	0	1	1
Peak Hour Factor	0.91	0.91	0.91	0.91	0.91	0.91	0.91	0.91	0.91	0.91	0.91	0.91
Percent Heavy Veh, %	2	2	2	2	2	2	2	2	2	2	2	2
Cap, veh/h	1132	612	813	136	186	79	656	312	28	21	323	293
Arrive On Green	0.33	0.33	0.33	0.08	0.08	0.08	0.18	0.18	0.18	0.19	0.19	0.19
Sat Flow, veh/h	3442	1863	1583	1774	2419	1031	3548	1686	150	111	1746	1583
Grp Volume(v), veh/h	519	60	600	27	52	54	491	0	232	317	0	282
Grp Sat Flow(s),veh/h/ln	1721	1863	1583	1774	1770	1681	1774	0	1836	1857	0	1583
Q Serve(g_s), s	10.4	2.0	25.9	1.2	2.5	2.7	11.4	0.0	10.3	14.7	0.0	15.4
Cycle Q Clear(g_c), s	10.4	2.0	25.9	1.2	2.5	2.7	11.4	0.0	10.3	14.7	0.0	15.4
Prop In Lane	1.00		1.00	1.00		0.61	1.00		0.08	0.06		1.00
Lane Grp Cap(c), veh/h	1132	612	813	136	136	129	656	0	339	344	0	293
V/C Ratio(X)	0.46	0.10	0.74	0.20	0.38	0.42	0.75	0.00	0.68	0.92	0.00	0.96
Avail Cap(c_a), veh/h	1142	618	818	365	364	346	1104	0	571	344	0	293
HCM Platoon Ratio	1.00	1.00	1.00	1.00	1.00	1.00	1.00	1.00	1.00	1.00	1.00	1.00
Upstream Filter(I)	1.00	1.00	1.00	1.00	1.00	1.00	1.00	0.00	1.00	1.00	0.00	1.00
Uniform Delay (d), s/veh	23.2	20.3	16.7	37.8	38.4	38.5	33.7	0.0	33.3	35.0	0.0	35.3
Incr Delay (d2), s/veh	0.6	0.1	4.2	0.7	1.8	2.1	1.7	0.0	2.4	29.3	0.0	42.0
Initial Q Delay(d3),s/veh	0.0	0.0	0.0	0.0	0.0	0.0	0.0	0.0	0.0	0.0	0.0	0.0
%ile BackOfQ(50%),veh/ln	5.0	1.0	15.3	0.6	1.3	1.3	5.8	0.0	5.4	10.3	0.0	10.2
LnGrp Delay(d),s/veh	23.8	20.5	20.8	38.5	40.2	40.6	35.5	0.0	35.7	64.3	0.0	77.3
LnGrp LOS	C	C	C	D	D	D	D		D	E		E
Approach Vol, veh/h		1179			133			723			599	
Approach Delay, s/veh		22.1			40.0			35.5			70.4	
Approach LOS		C			D			D			E	

Timer	1	2	3	4	5	6	7	8
Assigned Phs		2		4		6		8
Phs Duration (G+Y+Rc), s		33.6		21.1		11.6		21.1
Change Period (Y+Rc), s		4.9		4.9		4.9		4.9
Max Green Setting (Gmax), s		29.0		16.2		18.0		27.2
Max Q Clear Time (g_c+I1), s		27.9		17.4		4.7		13.4
Green Ext Time (p_c), s		0.8		0.0		0.4		2.7

Intersection Summary	
HCM 2010 Ctrl Delay	37.7
HCM 2010 LOS	D

Notes

User approved volume balancing among the lanes for turning movement.

Movement	EBL	EBT	EBR	WBL	WBT	WBR	NBL	NBT	NBR	SBL	SBT	SBR
Lane Configurations												
Volume (veh/h)	57	4	30	57	6	21	26	526	32	11	598	43
Number	7	4	14	3	8	18	5	2	12	1	6	16
Initial Q (Qb), veh	0	0	0	0	0	0	0	0	0	0	0	0
Ped-Bike Adj(A_pbT)	1.00		1.00	1.00		1.00	1.00		1.00	1.00		1.00
Parking Bus, Adj	1.00	1.00	1.00	1.00	1.00	1.00	1.00	1.00	1.00	1.00	1.00	1.00
Adj Sat Flow, veh/h/ln	1900	1863	1900	1900	1863	1900	1863	1863	1900	1863	1863	1900
Adj Flow Rate, veh/h	62	4	33	62	7	23	28	572	35	12	650	47
Adj No. of Lanes	0	1	0	0	1	0	1	1	0	1	1	0
Peak Hour Factor	0.92	0.92	0.92	0.92	0.92	0.92	0.92	0.92	0.92	0.92	0.92	0.91
Percent Heavy Veh, %	2	2	2	2	2	2	2	2	2	2	2	2
Cap, veh/h	147	11	46	154	17	34	40	1279	78	20	1245	90
Arrive On Green	0.08	0.08	0.08	0.08	0.08	0.08	0.02	0.74	0.74	0.01	0.73	0.73
Sat Flow, veh/h	966	132	549	1023	195	406	1774	1738	106	1774	1717	124
Grp Volume(v), veh/h	99	0	0	92	0	0	28	0	607	12	0	697
Grp Sat Flow(s),veh/h/ln	1647	0	0	1624	0	0	1774	0	1844	1774	0	1841
Q Serve(g_s), s	0.3	0.0	0.0	0.0	0.0	0.0	1.4	0.0	11.7	0.6	0.0	15.1
Cycle Q Clear(g_c), s	4.9	0.0	0.0	4.7	0.0	0.0	1.4	0.0	11.7	0.6	0.0	15.1
Prop In Lane	0.63		0.33	0.67		0.25	1.00		0.06	1.00		0.07
Lane Grp Cap(c), veh/h	204	0	0	204	0	0	40	0	1357	20	0	1335
V/C Ratio(X)	0.48	0.00	0.00	0.45	0.00	0.00	0.71	0.00	0.45	0.59	0.00	0.52
Avail Cap(c_a), veh/h	744	0	0	740	0	0	79	0	1357	79	0	1335
HCM Platoon Ratio	1.00	1.00	1.00	1.00	1.00	1.00	1.00	1.00	1.00	1.00	1.00	1.00
Upstream Filter(I)	1.00	0.00	0.00	1.00	0.00	0.00	1.00	0.00	1.00	1.00	0.00	1.00
Uniform Delay (d), s/veh	39.9	0.0	0.0	39.8	0.0	0.0	43.7	0.0	4.7	44.3	0.0	5.5
Incr Delay (d2), s/veh	0.7	0.0	0.0	0.6	0.0	0.0	8.2	0.0	1.1	9.6	0.0	1.5
Initial Q Delay(d3),s/veh	0.0	0.0	0.0	0.0	0.0	0.0	0.0	0.0	0.0	0.0	0.0	0.0
%ile BackOfQ(50%),veh/ln	2.4	0.0	0.0	2.2	0.0	0.0	0.8	0.0	6.1	0.4	0.0	8.1
LnGrp Delay(d),s/veh	40.6	0.0	0.0	40.4	0.0	0.0	51.9	0.0	5.7	53.8	0.0	6.9
LnGrp LOS	D			D			D		A	D		A
Approach Vol, veh/h		99			92			635			709	
Approach Delay, s/veh		40.6			40.4			7.8			7.7	
Approach LOS		D			D			A			A	

Timer	1	2	3	4	5	6	7	8
Assigned Phs	1	2		4	5	6		8
Phs Duration (G+Y+Rc), s	5.4	72.0		12.5	6.4	71.1		12.5
Change Period (Y+Rc), s	4.4	* 5.8		4.9	4.4	5.8		4.9
Max Green Setting (Gmax), s	1.0	* 30		41.0	4.0	29.9		41.0
Max Q Clear Time (g_c+I1), s	2.6	13.7		6.9	3.4	17.1		6.7
Green Ext Time (p_c), s	0.0	10.2		0.7	0.0	8.5		0.7

Intersection Summary	
HCM 2010 Ctrl Delay	11.8
HCM 2010 LOS	B

Notes

* HCM 2010 computational engine requires equal clearance times for the phases crossing the barrier.

Movement	NBT	NBR	SBL	SBT	SWL	SWR
Lane Configurations						
Volume (veh/h)	449	625	0	619	684	17
Number	2	12	1	6	3	18
Initial Q (Qb), veh	0	0	0	0	0	0
Ped-Bike Adj(A_pbT)		1.00	1.00		1.00	1.00
Parking Bus, Adj	1.00	1.00	1.00	1.00	1.00	1.00
Adj Sat Flow, veh/h/ln	1863	1900	0	1863	1863	1900
Adj Flow Rate, veh/h	488	679	0	673	760	0
Adj No. of Lanes	2	0	0	2	2	1
Peak Hour Factor	0.92	0.92	0.92	0.92	0.92	0.92
Percent Heavy Veh, %	2	2	0	2	2	0
Cap, veh/h	829	742	0	1658	997	454
Arrive On Green	0.47	0.47	0.00	0.47	0.28	0.00
Sat Flow, veh/h	1863	1583	0	3725	3548	1615
Grp Volume(v), veh/h	488	679	0	673	760	0
Grp Sat Flow(s),veh/h/ln	1770	1583	0	1770	1774	1615
Q Serve(g_s), s	8.6	17.0	0.0	5.3	8.4	0.0
Cycle Q Clear(g_c), s	8.6	17.0	0.0	5.3	8.4	0.0
Prop In Lane		1.00	0.00		1.00	1.00
Lane Grp Cap(c), veh/h	829	742	0	1658	997	454
V/C Ratio(X)	0.59	0.92	0.00	0.41	0.76	0.00
Avail Cap(c_a), veh/h	829	742	0	1658	1338	609
HCM Platoon Ratio	1.00	1.00	1.00	1.00	1.00	1.00
Upstream Filter(I)	1.00	1.00	0.00	1.00	1.00	0.00
Uniform Delay (d), s/veh	8.3	10.6	0.0	7.4	14.0	0.0
Incr Delay (d2), s/veh	3.1	17.9	0.0	0.7	1.8	0.0
Initial Q Delay(d3),s/veh	0.0	0.0	0.0	0.0	0.0	0.0
%ile BackOfQ(50%),veh/ln	4.8	10.8	0.0	2.7	4.3	0.0
LnGrp Delay(d),s/veh	11.4	28.4	0.0	8.2	15.9	0.0
LnGrp LOS	B	C		A	B	
Approach Vol, veh/h	1167			673	760	
Approach Delay, s/veh	21.3			8.2	15.9	
Approach LOS	C			A	B	

Timer	1	2	3	4	5	6	7	8
Assigned Phs		2				6		8
Phs Duration (G+Y+Rc), s		25.8				25.8		16.9
Change Period (Y+Rc), s		* 5.8				5.8		4.9
Max Green Setting (Gmax), s		* 20				16.2		16.1
Max Q Clear Time (g_c+I1), s		19.0				7.3		10.4
Green Ext Time (p_c), s		0.9				6.9		1.6

Intersection Summary	
HCM 2010 Ctrl Delay	16.3
HCM 2010 LOS	B

Notes

User approved volume balancing among the lanes for turning movement.

Movement	EBL	EBT	EBR	WBL	WBT	WBR	NBL	NBT	NBR	SBL	SBT	SBR
Lane Configurations												
Volume (veh/h)	37	33	160	15	12	575	70	375	16	688	673	33
Number	7	4	14	3	8	18	5	2	12	1	6	16
Initial Q (Qb), veh	0	0	0	0	0	0	0	0	0	0	0	0
Ped-Bike Adj(A_pbT)	1.00		1.00	1.00		1.00	1.00		1.00	1.00		1.00
Parking Bus, Adj	1.00	1.00	1.00	1.00	1.00	1.00	1.00	1.00	1.00	1.00	1.00	1.00
Adj Sat Flow, veh/h/ln	1863	1863	1900	1900	1863	1863	1863	1863	1900	1863	1863	1900
Adj Flow Rate, veh/h	38	34	163	0	0	611	71	383	16	702	687	34
Adj No. of Lanes	1	1	0	0	1	2	1	3	0	2	2	0
Peak Hour Factor	0.98	0.98	0.98	0.98	0.98	0.98	0.98	0.98	0.98	0.98	0.98	0.98
Percent Heavy Veh, %	2	2	2	2	2	2	2	2	2	2	2	2
Cap, veh/h	195	49	237	0	328	1266	90	2469	102	770	2285	113
Arrive On Green	0.18	0.18	0.18	0.00	0.00	0.18	0.05	0.49	0.49	0.22	0.67	0.67
Sat Flow, veh/h	807	281	1345	0	1863	3167	1774	5009	208	3442	3433	170
Grp Volume(v), veh/h	38	0	197	0	0	611	71	258	141	702	354	367
Grp Sat Flow(s),veh/h/ln	807	0	1625	0	1863	1583	1774	1695	1826	1721	1770	1833
Q Serve(g_s), s	5.5	0.0	15.5	0.0	0.0	19.5	5.4	5.7	5.8	27.1	11.4	11.4
Cycle Q Clear(g_c), s	5.5	0.0	15.5	0.0	0.0	19.5	5.4	5.7	5.8	27.1	11.4	11.4
Prop In Lane	1.00		0.83	0.00		1.00	1.00		0.11	1.00		0.09
Lane Grp Cap(c), veh/h	195	0	286	0	328	1266	90	1671	900	770	1178	1220
V/C Ratio(X)	0.19	0.00	0.69	0.00	0.00	0.48	0.79	0.15	0.16	0.91	0.30	0.30
Avail Cap(c_a), veh/h	297	0	491	0	563	1665	217	1671	900	1306	1178	1220
HCM Platoon Ratio	1.00	1.00	1.00	1.00	1.00	1.00	1.00	1.00	1.00	1.00	1.00	1.00
Upstream Filter(I)	1.00	0.00	1.00	0.00	0.00	0.69	1.00	1.00	1.00	1.00	1.00	1.00
Uniform Delay (d), s/veh	48.4	0.0	52.5	0.0	0.0	30.4	63.8	18.9	18.9	51.5	9.5	9.5
Incr Delay (d2), s/veh	0.2	0.0	1.1	0.0	0.0	0.1	5.6	0.2	0.4	3.3	0.7	0.6
Initial Q Delay(d3),s/veh	0.0	0.0	0.0	0.0	0.0	0.0	0.0	0.0	0.0	0.0	0.0	0.0
%ile BackOfQ(50%),veh/ln	1.2	0.0	7.0	0.0	0.0	8.6	2.8	2.7	3.0	13.2	5.7	5.9
LnGrp Delay(d),s/veh	48.6	0.0	53.6	0.0	0.0	30.4	69.4	19.1	19.3	54.8	10.2	10.1
LnGrp LOS	D		D			C	E	B	B	D	B	B
Approach Vol, veh/h		235			611			470			1423	
Approach Delay, s/veh		52.8			30.4			26.8			32.2	
Approach LOS		D			C			C			C	

Timer	1	2	3	4	5	6	7	8
Assigned Phs	1	2		4	5	6		8
Phs Duration (G+Y+Rc), s	34.8	72.3		28.8	11.3	95.8		28.8
Change Period (Y+Rc), s	4.4	* 5.3		4.9	4.4	5.3		4.9
Max Green Setting (Gmax), s	51.6	* 29		41.1	16.6	63.7		41.1
Max Q Clear Time (g_c+I1), s	29.1	7.8		17.5	7.4	13.4		21.5
Green Ext Time (p_c), s	1.4	7.0		2.5	0.0	8.4		2.4

Intersection Summary	
HCM 2010 Ctrl Delay	32.6
HCM 2010 LOS	C

Notes

User approved volume balancing among the lanes for turning movement.

Movement	WBL	WBR	NBT	NBR	SBL	SBT
Lane Configurations						
Volume (veh/h)	885	10	504	884	0	821
Number	3	18	2	12	1	6
Initial Q (Qb), veh	0	0	0	0	0	0
Ped-Bike Adj(A_pbT)	1.00	1.00		1.00	1.00	
Parking Bus, Adj	1.00	1.00	1.00	1.00	1.00	1.00
Adj Sat Flow, veh/h/ln	1863	1900	1863	1863	0	1863
Adj Flow Rate, veh/h	931	0	525	0	0	855
Adj No. of Lanes	2	1	2	1	0	2
Peak Hour Factor	0.96	0.96	0.96	0.96	0.96	0.96
Percent Heavy Veh, %	2	0	2	2	0	2
Cap, veh/h	1136	517	1667	746	0	1667
Arrive On Green	0.32	0.00	0.47	0.00	0.00	0.47
Sat Flow, veh/h	3548	1615	3632	1583	0	3725
Grp Volume(v), veh/h	931	0	525	0	0	855
Grp Sat Flow(s),veh/h/ln	1774	1615	1770	1583	0	1770
Q Serve(g_s), s	16.4	0.0	6.3	0.0	0.0	11.5
Cycle Q Clear(g_c), s	16.4	0.0	6.3	0.0	0.0	11.5
Prop In Lane	1.00	1.00		1.00	0.00	
Lane Grp Cap(c), veh/h	1136	517	1667	746	0	1667
V/C Ratio(X)	0.82	0.00	0.31	0.00	0.00	0.51
Avail Cap(c_a), veh/h	1424	648	1667	746	0	1667
HCM Platoon Ratio	1.00	1.00	1.00	1.00	1.00	1.00
Upstream Filter(I)	1.00	0.00	1.00	0.00	0.00	1.00
Uniform Delay (d), s/veh	21.3	0.0	11.2	0.0	0.0	12.5
Incr Delay (d2), s/veh	3.4	0.0	0.5	0.0	0.0	1.1
Initial Q Delay(d3),s/veh	0.0	0.0	0.0	0.0	0.0	0.0
%ile BackOfQ(50%),veh/ln	8.6	0.0	3.2	0.0	0.0	5.8
LnGrp Delay(d),s/veh	24.7	0.0	11.7	0.0	0.0	13.7
LnGrp LOS	C		B			B
Approach Vol, veh/h	931		525			855
Approach Delay, s/veh	24.7		11.7			13.7
Approach LOS	C		B			B

Timer	1	2	3	4	5	6	7	8
Assigned Phs		2				6		8
Phs Duration (G+Y+Rc), s		37.5				37.5		30.5
Change Period (Y+Rc), s		5.5				* 5.5		8.7
Max Green Setting (Gmax), s		26.5				* 27		27.3
Max Q Clear Time (g_c+I1), s		8.3				13.5		18.4
Green Ext Time (p_c), s		12.2				9.6		3.3

Intersection Summary	
HCM 2010 Ctrl Delay	17.7
HCM 2010 LOS	B

Notes

User approved volume balancing among the lanes for turning movement.

Movement	EBL	EBT	EBR	WBL	WBT	WBR	NBL	NBT	NBR	SBL	SBT	SBR
Lane Configurations												
Volume (veh/h)	455	266	24	230	193	128	37	674	219	207	669	365
Number	7	4	14	3	8	18	5	2	12	1	6	16
Initial Q (Qb), veh	0	0	0	0	0	0	0	0	0	0	0	0
Ped-Bike Adj(A_pbT)	1.00		1.00	1.00		1.00	1.00		1.00	1.00		1.00
Parking Bus, Adj	1.00	1.00	1.00	1.00	1.00	1.00	1.00	1.00	1.00	1.00	1.00	1.00
Adj Sat Flow, veh/h/ln	1863	1863	1900	1863	1863	1863	1863	1863	1900	1863	1863	1900
Adj Flow Rate, veh/h	396	405	26	250	198	136	39	717	233	220	712	388
Adj No. of Lanes	1	1	0	2	1	1	1	2	0	1	2	0
Peak Hour Factor	0.94	0.94	0.94	0.94	0.94	0.94	0.94	0.94	0.94	0.94	0.94	0.94
Percent Heavy Veh, %	2	2	2	2	2	2	2	2	2	2	2	2
Cap, veh/h	454	443	28	448	235	200	50	897	291	235	987	537
Arrive On Green	0.26	0.26	0.26	0.13	0.13	0.13	0.03	0.34	0.34	0.13	0.45	0.45
Sat Flow, veh/h	1774	1732	111	3548	1863	1583	1774	2628	854	1774	2215	1205
Grp Volume(v), veh/h	396	0	431	250	198	136	39	483	467	220	569	531
Grp Sat Flow(s),veh/h/ln	1774	0	1843	1774	1863	1583	1774	1770	1712	1774	1770	1650
Q Serve(g_s), s	29.1	0.0	30.9	9.0	14.1	11.2	3.0	33.6	33.6	16.7	35.7	35.8
Cycle Q Clear(g_c), s	29.1	0.0	30.9	9.0	14.1	11.2	3.0	33.6	33.6	16.7	35.7	35.8
Prop In Lane	1.00		0.06	1.00		1.00	1.00		0.50	1.00		0.73
Lane Grp Cap(c), veh/h	454	0	472	448	235	200	50	604	584	235	788	735
V/C Ratio(X)	0.87	0.00	0.91	0.56	0.84	0.68	0.78	0.80	0.80	0.94	0.72	0.72
Avail Cap(c_a), veh/h	497	0	516	629	330	281	69	604	584	235	788	735
HCM Platoon Ratio	1.00	1.00	1.00	1.00	1.00	1.00	1.00	1.00	1.00	1.00	1.00	1.00
Upstream Filter(I)	0.56	0.00	0.56	1.00	1.00	1.00	1.00	1.00	1.00	1.00	1.00	1.00
Uniform Delay (d), s/veh	48.5	0.0	49.1	55.9	58.1	56.8	65.7	40.6	40.6	58.4	30.8	30.8
Incr Delay (d2), s/veh	9.0	0.0	12.7	0.4	9.5	1.5	20.9	10.6	11.0	41.1	5.7	6.1
Initial Q Delay(d3),s/veh	0.0	0.0	0.0	0.0	0.0	0.0	0.0	0.0	0.0	0.0	0.0	0.0
%ile BackOfQ(50%),veh/ln	15.3	0.0	17.3	4.4	7.9	5.0	1.8	18.1	17.6	10.9	18.6	17.5
LnGrp Delay(d),s/veh	57.4	0.0	61.8	56.3	67.6	58.3	86.6	51.2	51.5	99.6	36.5	36.9
LnGrp LOS	E		E	E	E	E	F	D	D	F	D	D
Approach Vol, veh/h		827			584			989			1320	
Approach Delay, s/veh		59.7			60.6			52.8			47.2	
Approach LOS		E			E			D			D	

Timer	1	2	3	4	5	6	7	8
Assigned Phs	1	2		4	5	6		8
Phs Duration (G+Y+Rc), s	22.4	51.8		39.7	8.2	66.0		22.1
Change Period (Y+Rc), s	4.4	* 5.4		4.9	4.4	5.4		4.9
Max Green Setting (Gmax), s	18.0	* 37		38.1	5.3	48.9		24.1
Max Q Clear Time (g_c+I1), s	11.7	35.6		32.9	5.0	37.8		16.1
Green Ext Time (p_c), s	0.0	0.9		1.9	0.0	7.0		1.0

Intersection Summary	
HCM 2010 Ctrl Delay	53.5
HCM 2010 LOS	D

Notes

User approved volume balancing among the lanes for turning movement.

Movement	EBL	EBT	EBR	WBL	WBT	WBR	NBL	NBT	NBR	SBL	SBT	SBR
Lane Configurations												
Volume (veh/h)	256	890	94	5	795	42	68	7	11	122	21	446
Number	5	2	12	1	6	16	3	8	18	7	4	14
Initial Q (Qb), veh	0	0	0	0	0	0	0	0	0	0	0	0
Ped-Bike Adj(A_pbT)	1.00		1.00	1.00		1.00	1.00		1.00	1.00		1.00
Parking Bus, Adj	1.00	1.00	1.00	1.00	1.00	1.00	1.00	1.00	1.00	1.00	1.00	1.00
Adj Sat Flow, veh/h/ln	1863	1863	1900	1863	1863	1900	1900	1863	1900	1900	1863	1863
Adj Flow Rate, veh/h	281	978	103	5	874	46	75	8	12	134	23	490
Adj No. of Lanes	1	2	0	1	2	0	0	1	0	0	1	1
Peak Hour Factor	0.91	0.91	0.91	0.91	0.91	0.91	0.91	0.91	0.91	0.91	0.91	0.91
Percent Heavy Veh, %	2	2	2	2	2	2	2	2	2	2	2	2
Cap, veh/h	307	2075	218	9	1622	85	168	19	20	359	53	659
Arrive On Green	0.17	0.64	0.64	0.01	0.47	0.47	0.24	0.24	0.24	0.24	0.24	0.24
Sat Flow, veh/h	1774	3232	340	1774	3421	180	497	79	83	1275	219	1583
Grp Volume(v), veh/h	281	535	546	5	452	468	95	0	0	157	0	490
Grp Sat Flow(s),veh/h/ln	1774	1770	1803	1774	1770	1831	659	0	0	1494	0	1583
Q Serve(g_s), s	21.2	21.1	21.1	0.4	24.5	24.5	11.2	0.0	0.0	0.0	0.0	33.1
Cycle Q Clear(g_c), s	21.2	21.1	21.1	0.4	24.5	24.5	23.1	0.0	0.0	11.9	0.0	33.1
Prop In Lane	1.00		0.19	1.00		0.10	0.79		0.13	0.85		1.00
Lane Grp Cap(c), veh/h	307	1136	1157	9	839	868	208	0	0	413	0	659
V/C Ratio(X)	0.92	0.47	0.47	0.56	0.54	0.54	0.46	0.00	0.00	0.38	0.00	0.74
Avail Cap(c_a), veh/h	477	1136	1157	60	839	868	208	0	0	413	0	659
HCM Platoon Ratio	1.00	1.00	1.00	1.00	1.00	1.00	1.00	1.00	1.00	1.00	1.00	1.00
Upstream Filter(I)	1.00	1.00	1.00	1.00	1.00	1.00	1.00	0.00	0.00	1.00	0.00	1.00
Uniform Delay (d), s/veh	55.3	12.5	12.5	67.5	25.3	25.3	51.9	0.0	0.0	43.4	0.0	33.6
Incr Delay (d2), s/veh	11.9	1.4	1.4	18.5	2.5	2.4	0.6	0.0	0.0	0.2	0.0	4.0
Initial Q Delay(d3),s/veh	0.0	0.0	0.0	0.0	0.0	0.0	0.0	0.0	0.0	0.0	0.0	0.0
%ile BackOfQ(50%),veh/ln	11.4	10.7	10.9	0.2	12.5	12.9	3.3	0.0	0.0	5.0	0.0	16.3
LnGrp Delay(d),s/veh	67.1	13.9	13.9	86.0	27.7	27.7	52.4	0.0	0.0	43.6	0.0	37.6
LnGrp LOS	E	B	B	F	C	C	D			D		D
Approach Vol, veh/h		1362			925			95			647	
Approach Delay, s/veh		24.9			28.0			52.4			39.1	
Approach LOS		C			C			D			D	

Timer	1	2	3	4	5	6	7	8
Assigned Phs	1	2		4	5	6		8
Phs Duration (G+Y+Rc), s	5.1	92.9		38.0	27.9	70.1		38.0
Change Period (Y+Rc), s	4.4	* 5.6		4.9	4.4	5.6		4.9
Max Green Setting (Gmax), s	4.6	* 84		33.1	36.6	51.4		33.1
Max Q Clear Time (g_c+I1), s	2.4	23.1		35.1	23.2	26.5		25.1
Green Ext Time (p_c), s	0.0	51.5		0.0	0.3	23.0		1.5

Intersection Summary	
HCM 2010 Ctrl Delay	29.7
HCM 2010 LOS	C

Notes

* HCM 2010 computational engine requires equal clearance times for the phases crossing the barrier.

Intersection	
Int Delay, s/veh	1.2

Movement	EBT	EBR	WBL	WBT	NBL	NBR
Vol, veh/h	879	42	40	783	20	23
Conflicting Peds, #/hr	0	18	0	0	0	0
Sign Control	Free	Free	Free	Free	Stop	Stop
RT Channelized	-	None	-	None	-	None
Storage Length	-	-	100	-	0	-
Veh in Median Storage, #	0	-	-	0	0	-
Grade, %	0	-	-	0	0	-
Peak Hour Factor	84	84	84	84	84	84
Heavy Vehicles, %	2	2	2	2	2	2
Mvmt Flow	1046	50	48	932	24	27

Major/Minor	Major1		Major2		Minor1	
Conflicting Flow All	0	0	1096	0	1632	548
Stage 1	-	-	-	-	1071	-
Stage 2	-	-	-	-	561	-
Critical Hdwy	-	-	4.14	-	6.84	6.94
Critical Hdwy Stg 1	-	-	-	-	5.84	-
Critical Hdwy Stg 2	-	-	-	-	5.84	-
Follow-up Hdwy	-	-	2.22	-	3.52	3.32
Pot Cap-1 Maneuver	-	-	633	-	92	480
Stage 1	-	-	-	-	290	-
Stage 2	-	-	-	-	535	-
Platoon blocked, %	-	-		-		
Mov Cap-1 Maneuver	-	-	633	-	84	480
Mov Cap-2 Maneuver	-	-	-	-	84	-
Stage 1	-	-	-	-	290	-
Stage 2	-	-	-	-	487	-

Approach	EB	WB	NB
HCM Control Delay, s	0	0.5	41
HCM LOS			E

Minor Lane/Major Mvmt	NBLn1	EBT	EBR	WBL	WBT
Capacity (veh/h)	150	-	-	633	-
HCM Lane V/C Ratio	0.341	-	-	0.075	-
HCM Control Delay (s)	41	-	-	11.1	-
HCM Lane LOS	E	-	-	B	-
HCM 95th %tile Q(veh)	1.4	-	-	0.2	-

Movement	EBL	EBT	EBR	WBL	WBT	WBR	NBL	NBT	NBR	SBL	SBT	SBR
Lane Configurations												
Volume (veh/h)	175	696	200	130	587	135	103	47	77	220	28	224
Number	5	2	12	1	6	16	3	8	18	7	4	14
Initial Q (Qb), veh	0	0	0	0	0	0	0	0	0	0	0	0
Ped-Bike Adj(A_pbT)	1.00		0.97	1.00		0.98	1.00		0.98	1.00		0.90
Parking Bus, Adj	1.00	1.00	1.00	1.00	1.00	1.00	1.00	1.00	1.00	1.00	1.00	1.00
Adj Sat Flow, veh/h/ln	1863	1863	1900	1863	1863	1863	1863	1863	1900	1863	1863	1863
Adj Flow Rate, veh/h	188	748	215	140	631	145	111	51	83	258	0	241
Adj No. of Lanes	1	2	0	1	2	1	1	1	0	2	0	1
Peak Hour Factor	0.93	0.93	0.93	0.93	0.93	0.93	0.93	0.93	0.93	0.93	0.93	0.93
Percent Heavy Veh, %	2	2	2	2	2	2	2	2	2	2	2	2
Cap, veh/h	219	1446	416	273	1321	939	180	64	104	801	0	322
Arrive On Green	0.12	0.54	0.54	0.37	0.37	0.37	0.10	0.10	0.10	0.23	0.00	0.23
Sat Flow, veh/h	1774	2695	775	580	3539	1557	1774	632	1029	3548	0	1426
Grp Volume(v), veh/h	188	491	472	140	631	145	111	0	134	258	0	241
Grp Sat Flow(s),veh/h/ln	1774	1770	1700	580	1770	1557	1774	0	1661	1774	0	1426
Q Serve(g_s), s	11.4	19.6	19.6	22.4	15.0	4.5	6.6	0.0	8.7	6.7	0.0	17.3
Cycle Q Clear(g_c), s	11.4	19.6	19.6	24.1	15.0	4.5	6.6	0.0	8.7	6.7	0.0	17.3
Prop In Lane	1.00		0.46	1.00		1.00	1.00		0.62	1.00		1.00
Lane Grp Cap(c), veh/h	219	949	912	273	1321	939	180	0	168	801	0	322
V/C Ratio(X)	0.86	0.52	0.52	0.51	0.48	0.15	0.62	0.00	0.80	0.32	0.00	0.75
Avail Cap(c_a), veh/h	284	949	912	273	1321	939	258	0	242	871	0	350
HCM Platoon Ratio	1.00	1.00	1.00	1.00	1.00	1.00	1.00	1.00	1.00	1.00	1.00	1.00
Upstream Filter(I)	1.00	1.00	1.00	1.00	1.00	1.00	1.00	0.00	1.00	1.00	0.00	1.00
Uniform Delay (d), s/veh	47.3	16.4	16.4	29.8	26.3	9.8	47.4	0.0	48.3	35.6	0.0	39.7
Incr Delay (d2), s/veh	17.1	2.0	2.1	1.8	0.3	0.1	3.4	0.0	11.2	0.1	0.0	6.7
Initial Q Delay(d3),s/veh	0.0	0.0	0.0	0.0	0.0	0.0	0.0	0.0	0.0	0.0	0.0	0.0
%ile BackOfQ(50%),veh/ln	6.6	10.1	9.7	3.7	7.3	3.0	3.4	0.0	4.5	3.3	0.0	7.4
LnGrp Delay(d),s/veh	64.4	18.4	18.5	31.7	26.6	9.8	50.8	0.0	59.5	35.6	0.0	46.4
LnGrp LOS	E	B	B	C	C	A	D		E	D		D
Approach Vol, veh/h		1151			916			245			499	
Approach Delay, s/veh		25.9			24.7			55.6			40.8	
Approach LOS		C			C			E			D	

Timer	1	2	3	4	5	6	7	8
Assigned Phs		2		4	5	6		8
Phs Duration (G+Y+Rc), s		65.1		29.7	18.0	47.1		15.1
Change Period (Y+Rc), s		* 6.1		4.9	4.4	6.1		4.0
Max Green Setting (Gmax), s		* 53		27.0	17.6	30.0		16.0
Max Q Clear Time (g_c+I1), s		21.6		19.3	13.4	26.1		10.7
Green Ext Time (p_c), s		19.0		0.7	0.1	3.4		0.5

Intersection Summary	
HCM 2010 Ctrl Delay	30.8
HCM 2010 LOS	C

Notes

User approved volume balancing among the lanes for turning movement.

Intersection	
Int Delay, s/veh	2.1

Movement	EBL	EBT	WBT	WBR	SBL	SBR
Vol, veh/h	57	899	692	15	30	74
Conflicting Peds, #/hr	0	0	0	3	0	0
Sign Control	Free	Free	Free	Free	Stop	Stop
RT Channelized	-	None	-	None	-	None
Storage Length	140	-	-	-	0	-
Veh in Median Storage, #	-	0	0	-	0	-
Grade, %	-	0	0	-	0	-
Peak Hour Factor	87	87	87	87	87	87
Heavy Vehicles, %	2	2	2	2	2	2
Mvmt Flow	66	1033	795	17	34	85

Major/Minor	Major1		Major2		Minor2	
Conflicting Flow All	813	0	-	0	1452	406
Stage 1	-	-	-	-	804	-
Stage 2	-	-	-	-	648	-
Critical Hdwy	4.14	-	-	-	6.84	6.94
Critical Hdwy Stg 1	-	-	-	-	5.84	-
Critical Hdwy Stg 2	-	-	-	-	5.84	-
Follow-up Hdwy	2.22	-	-	-	3.52	3.32
Pot Cap-1 Maneuver	810	-	-	-	121	594
Stage 1	-	-	-	-	401	-
Stage 2	-	-	-	-	483	-
Platoon blocked, %		-	-	-		
Mov Cap-1 Maneuver	810	-	-	-	111	594
Mov Cap-2 Maneuver	-	-	-	-	111	-
Stage 1	-	-	-	-	401	-
Stage 2	-	-	-	-	444	-

Approach	EB	WB	SB
HCM Control Delay, s	0.6	0	29.6
HCM LOS			D

Minor Lane/Major Mvmt	EBL	EBT	WBT	WBR	SBLn1
Capacity (veh/h)	810	-	-	-	263
HCM Lane V/C Ratio	0.081	-	-	-	0.455
HCM Control Delay (s)	9.8	-	-	-	29.6
HCM Lane LOS	A	-	-	-	D
HCM 95th %tile Q(veh)	0.3	-	-	-	2.2

Movement	EBL	EBT	EBR	WBL	WBT	WBR	NBL	NBT	NBR	SBL	SBT	SBR
Lane Configurations												
Volume (veh/h)	49	653	227	165	575	36	148	43	154	21	17	29
Number	5	2	12	1	6	16	3	8	18	7	4	14
Initial Q (Qb), veh	0	0	0	0	0	0	0	0	0	0	0	0
Ped-Bike Adj(A_pbT)	1.00		0.98	1.00		0.97	1.00		0.97	1.00		1.00
Parking Bus, Adj	1.00	1.00	1.00	1.00	1.00	1.00	1.00	1.00	1.00	1.00	1.00	1.00
Adj Sat Flow, veh/h/ln	1863	1863	1863	1863	1863	1900	1863	1863	1863	1863	1863	1863
Adj Flow Rate, veh/h	54	718	249	181	632	40	163	47	169	23	19	32
Adj No. of Lanes	1	2	1	1	2	0	1	1	1	1	1	1
Peak Hour Factor	0.91	0.91	0.91	0.91	0.91	0.91	0.91	0.91	0.91	0.91	0.91	0.91
Percent Heavy Veh, %	2	2	2	2	2	2	2	2	2	2	2	2
Cap, veh/h	70	1758	772	210	1944	123	192	332	461	33	165	140
Arrive On Green	0.03	0.33	0.33	0.12	0.58	0.58	0.11	0.18	0.18	0.02	0.09	0.09
Sat Flow, veh/h	1774	3539	1554	1774	3375	213	1774	1863	1534	1774	1863	1583
Grp Volume(v), veh/h	54	718	249	181	331	341	163	47	169	23	19	32
Grp Sat Flow(s),veh/h/ln	1774	1770	1554	1774	1770	1819	1774	1863	1534	1774	1863	1583
Q Serve(g_s), s	3.3	17.2	13.2	11.0	10.7	10.8	9.9	2.3	9.6	1.4	1.0	2.1
Cycle Q Clear(g_c), s	3.3	17.2	13.2	11.0	10.7	10.8	9.9	2.3	9.6	1.4	1.0	2.1
Prop In Lane	1.00		1.00	1.00		0.12	1.00		1.00	1.00		1.00
Lane Grp Cap(c), veh/h	70	1758	772	210	1019	1048	192	332	461	33	165	140
V/C Ratio(X)	0.78	0.41	0.32	0.86	0.32	0.33	0.85	0.14	0.37	0.71	0.12	0.23
Avail Cap(c_a), veh/h	144	1758	772	268	1019	1048	219	571	658	90	440	374
HCM Platoon Ratio	0.67	0.67	0.67	1.00	1.00	1.00	1.00	1.00	1.00	1.00	1.00	1.00
Upstream Filter(I)	1.00	1.00	1.00	1.00	1.00	1.00	1.00	1.00	1.00	1.00	1.00	1.00
Uniform Delay (d), s/veh	53.1	24.2	22.9	47.6	12.2	12.2	48.2	38.1	30.6	53.7	46.2	46.6
Incr Delay (d2), s/veh	6.7	0.7	1.1	16.8	0.8	0.8	21.4	0.1	0.2	9.9	0.1	0.3
Initial Q Delay(d3),s/veh	0.0	0.0	0.0	0.0	0.0	0.0	0.0	0.0	0.0	0.0	0.0	0.0
%ile BackOfQ(50%),veh/ln	1.8	8.6	5.9	6.4	5.5	5.6	6.0	1.2	4.1	0.8	0.5	0.9
LnGrp Delay(d),s/veh	59.8	24.9	24.0	64.4	13.0	13.0	69.6	38.2	30.7	63.6	46.3	46.9
LnGrp LOS	E	C	C	E	B	B	E	D	C	E	D	D
Approach Vol, veh/h		1021			853			379			74	
Approach Delay, s/veh		26.5			23.9			48.4			52.0	
Approach LOS		C			C			D			D	

Timer	1	2	3	4	5	6	7	8
Assigned Phs	1	2	3	4	5	6	7	8
Phs Duration (G+Y+Rc), s	17.4	61.3	16.3	14.9	8.7	70.1	6.4	24.8
Change Period (Y+Rc), s	4.4	* 6.7	4.4	* 5.2	4.4	6.7	4.4	5.2
Max Green Setting (Gmax), s	16.6	* 34	13.6	* 26	8.9	41.1	5.6	33.7
Max Q Clear Time (g_c+I1), s	13.0	19.2	11.9	4.1	5.3	12.8	3.4	11.6
Green Ext Time (p_c), s	0.1	6.4	0.0	0.6	0.0	8.2	0.0	0.6

Intersection Summary	
HCM 2010 Ctrl Delay	29.9
HCM 2010 LOS	C

Notes

* HCM 2010 computational engine requires equal clearance times for the phases crossing the barrier.

Movement	EBL	EBT	EBR	WBL	WBT	WBR	NBL	NBT	NBR	SBL	SBT	SBR
Lane Configurations												
Volume (veh/h)	10	14	18	40	21	25	33	653	63	27	671	12
Number	7	4	14	3	8	18	5	2	12	1	6	16
Initial Q (Qb), veh	0	0	0	0	0	0	0	0	0	0	0	0
Ped-Bike Adj(A_pbT)	0.98		0.92	0.93		0.98	1.00		0.96	1.00		0.97
Parking Bus, Adj	1.00	1.00	1.00	1.00	1.00	1.00	1.00	1.00	1.00	1.00	1.00	1.00
Adj Sat Flow, veh/h/ln	1900	1863	1900	1900	1863	1900	1863	1863	1900	1863	1863	1900
Adj Flow Rate, veh/h	10	15	19	42	22	26	34	680	66	28	699	12
Adj No. of Lanes	0	1	0	0	1	0	1	2	0	1	2	0
Peak Hour Factor	0.96	0.96	0.96	0.96	0.96	0.96	0.96	0.96	0.96	0.96	0.96	0.96
Percent Heavy Veh, %	2	2	2	2	2	2	2	2	2	2	2	2
Cap, veh/h	79	111	114	148	78	73	43	2200	213	37	2398	41
Arrive On Green	0.17	0.17	0.17	0.17	0.17	0.17	0.02	0.68	0.68	0.04	1.00	1.00
Sat Flow, veh/h	233	666	683	599	469	434	1774	3248	315	1774	3558	61
Grp Volume(v), veh/h	44	0	0	90	0	0	34	370	376	28	348	363
Grp Sat Flow(s),veh/h/ln	1581	0	0	1502	0	0	1774	1770	1793	1774	1770	1850
Q Serve(g_s), s	0.0	0.0	0.0	3.0	0.0	0.0	2.1	9.4	9.4	1.7	0.0	0.0
Cycle Q Clear(g_c), s	2.5	0.0	0.0	5.5	0.0	0.0	2.1	9.4	9.4	1.7	0.0	0.0
Prop In Lane	0.23		0.43	0.47		0.29	1.00		0.18	1.00		0.03
Lane Grp Cap(c), veh/h	305	0	0	299	0	0	43	1198	1215	37	1193	1247
V/C Ratio(X)	0.14	0.00	0.00	0.30	0.00	0.00	0.79	0.31	0.31	0.75	0.29	0.29
Avail Cap(c_a), veh/h	496	0	0	481	0	0	171	1198	1215	155	1193	1247
HCM Platoon Ratio	1.00	1.00	1.00	1.00	1.00	1.00	1.00	1.00	1.00	2.00	2.00	2.00
Upstream Filter(I)	1.00	0.00	0.00	1.00	0.00	0.00	1.00	1.00	1.00	0.92	0.92	0.92
Uniform Delay (d), s/veh	39.2	0.0	0.0	40.3	0.0	0.0	53.4	7.2	7.2	52.4	0.0	0.0
Incr Delay (d2), s/veh	0.1	0.0	0.0	0.2	0.0	0.0	11.6	0.7	0.7	10.1	0.6	0.5
Initial Q Delay(d3),s/veh	0.0	0.0	0.0	0.0	0.0	0.0	0.0	0.0	0.0	0.0	0.0	0.0
%ile BackOfQ(50%),veh/ln	1.2	0.0	0.0	2.4	0.0	0.0	1.2	4.7	4.8	0.9	0.2	0.2
LnGrp Delay(d),s/veh	39.3	0.0	0.0	40.5	0.0	0.0	65.0	7.9	7.9	62.6	0.6	0.5
LnGrp LOS	D			D			E	A	A	E	A	A
Approach Vol, veh/h		44			90			780			739	
Approach Delay, s/veh		39.3			40.5			10.4			2.9	
Approach LOS		D			D			B			A	

Timer	1	2	3	4	5	6	7	8
Assigned Phs	1	2		4	5	6		8
Phs Duration (G+Y+Rc), s	6.7	80.0		23.3	7.1	79.6		23.3
Change Period (Y+Rc), s	4.4	* 5.5		4.9	4.4	5.5		4.9
Max Green Setting (Gmax), s	9.6	* 54		32.1	10.6	52.5		32.1
Max Q Clear Time (g_c+I1), s	3.7	11.4		4.5	4.1	2.0		7.5
Green Ext Time (p_c), s	0.0	21.1		0.5	0.0	22.8		0.5

Intersection Summary	
HCM 2010 Ctrl Delay	9.5
HCM 2010 LOS	A

Notes

* HCM 2010 computational engine requires equal clearance times for the phases crossing the barrier.

Movement	EBL	EBT	EBR	WBL	WBT	WBR	NBL	NBT	NBR	SBL	SBT	SBR
Lane Configurations												
Volume (veh/h)	93	86	82	61	111	74	105	557	44	119	757	67
Number	7	4	14	3	8	18	5	2	12	1	6	16
Initial Q (Qb), veh	0	0	0	0	0	0	0	0	0	0	0	0
Ped-Bike Adj(A_pbT)	0.99		0.97	0.99		0.97	1.00		0.95	1.00		0.95
Parking Bus, Adj	1.00	1.00	1.00	1.00	1.00	1.00	1.00	1.00	1.00	1.00	1.00	1.00
Adj Sat Flow, veh/h/ln	1863	1863	1900	1863	1863	1900	1863	1863	1900	1863	1863	1900
Adj Flow Rate, veh/h	95	88	84	62	113	76	107	568	45	121	772	68
Adj No. of Lanes	1	1	0	1	1	0	1	2	0	1	2	0
Peak Hour Factor	0.98	0.98	0.98	0.98	0.98	0.98	0.98	0.98	0.98	0.98	0.98	0.98
Percent Heavy Veh, %	2	2	2	2	2	2	2	2	2	2	2	2
Cap, veh/h	227	200	191	238	238	160	132	1824	144	150	1839	162
Arrive On Green	0.23	0.23	0.23	0.23	0.23	0.23	0.15	1.00	1.00	0.03	0.19	0.19
Sat Flow, veh/h	1176	861	822	1192	1025	689	1774	3310	262	1774	3276	288
Grp Volume(v), veh/h	95	0	172	62	0	189	107	303	310	121	417	423
Grp Sat Flow(s),veh/h/ln	1176	0	1684	1192	0	1714	1774	1770	1802	1774	1770	1795
Q Serve(g_s), s	8.3	0.0	9.6	5.2	0.0	10.5	6.4	0.0	0.0	7.5	22.9	22.9
Cycle Q Clear(g_c), s	18.8	0.0	9.6	14.8	0.0	10.5	6.4	0.0	0.0	7.5	22.9	22.9
Prop In Lane	1.00		0.49	1.00		0.40	1.00		0.15	1.00		0.16
Lane Grp Cap(c), veh/h	227	0	391	238	0	398	132	975	993	150	994	1008
V/C Ratio(X)	0.42	0.00	0.44	0.26	0.00	0.47	0.81	0.31	0.31	0.81	0.42	0.42
Avail Cap(c_a), veh/h	318	0	522	331	0	531	268	975	993	284	994	1008
HCM Platoon Ratio	1.00	1.00	1.00	1.00	1.00	1.00	2.00	2.00	2.00	0.33	0.33	0.33
Upstream Filter(I)	1.00	0.00	1.00	1.00	0.00	1.00	0.97	0.97	0.97	0.92	0.92	0.92
Uniform Delay (d), s/veh	44.5	0.0	36.1	42.4	0.0	36.4	46.1	0.0	0.0	52.6	29.0	29.0
Incr Delay (d2), s/veh	0.5	0.0	0.3	0.2	0.0	0.3	4.4	0.8	0.8	3.5	1.2	1.2
Initial Q Delay(d3),s/veh	0.0	0.0	0.0	0.0	0.0	0.0	0.0	0.0	0.0	0.0	0.0	0.0
%ile BackOfQ(50%),veh/ln	2.7	0.0	4.5	1.7	0.0	5.0	3.3	0.2	0.2	3.8	11.6	11.8
LnGrp Delay(d),s/veh	45.0	0.0	36.4	42.6	0.0	36.7	50.4	0.8	0.8	56.1	30.2	30.2
LnGrp LOS	D		D	D		D	D	A	A	E	C	C
Approach Vol, veh/h		267			251			720			961	
Approach Delay, s/veh		39.4			38.2			8.2			33.4	
Approach LOS		D			D			A			C	

Timer	1	2	3	4	5	6	7	8
Assigned Phs	1	2		4	5	6		8
Phs Duration (G+Y+Rc), s	13.7	65.8		30.5	12.6	67.0		30.5
Change Period (Y+Rc), s	4.4	5.2		4.9	4.4	* 5.2		4.9
Max Green Setting (Gmax), s	17.6	43.8		34.1	16.6	* 45		34.1
Max Q Clear Time (g_c+I1), s	10.5	2.0		20.8	8.4	24.9		16.8
Green Ext Time (p_c), s	0.1	14.5		1.5	0.1	10.5		1.7

Intersection Summary	
HCM 2010 Ctrl Delay	26.4
HCM 2010 LOS	C

Notes

* HCM 2010 computational engine requires equal clearance times for the phases crossing the barrier.

Movement	EBL	EBT	EBR	WBL	WBT	WBR	NBL	NBT	NBR	SBL	SBT	SBR
Lane Configurations												
Volume (veh/h)	80	135	45	35	112	168	68	666	49	342	810	64
Number	7	4	14	3	8	18	5	2	12	1	6	16
Initial Q (Qb), veh	0	0	0	0	0	0	0	0	0	0	0	0
Ped-Bike Adj(A_pbT)	0.95		0.97	0.99		0.90	1.00		0.96	1.00		0.97
Parking Bus, Adj	1.00	1.00	1.00	1.00	1.00	1.00	1.00	1.00	1.00	1.00	1.00	1.00
Adj Sat Flow, veh/h/ln	1863	1863	1900	1863	1863	1863	1863	1863	1900	1863	1863	1900
Adj Flow Rate, veh/h	86	145	48	38	120	181	73	716	53	368	871	69
Adj No. of Lanes	1	1	0	1	1	1	1	2	0	1	2	0
Peak Hour Factor	0.93	0.93	0.93	0.93	0.93	0.93	0.93	0.93	0.93	0.93	0.93	0.93
Percent Heavy Veh, %	2	2	2	2	2	2	2	2	2	2	2	2
Cap, veh/h	242	300	99	219	421	323	94	1400	104	399	1963	155
Arrive On Green	0.23	0.23	0.23	0.23	0.23	0.23	0.02	0.14	0.14	0.22	0.59	0.59
Sat Flow, veh/h	1021	1330	440	1175	1863	1431	1774	3332	246	1774	3315	263
Grp Volume(v), veh/h	86	0	193	38	120	181	73	380	389	368	465	475
Grp Sat Flow(s),veh/h/ln	1021	0	1770	1175	1863	1431	1774	1770	1809	1774	1770	1808
Q Serve(g_s), s	8.4	0.0	10.4	3.2	5.9	12.3	4.5	21.9	21.9	22.3	16.0	16.0
Cycle Q Clear(g_c), s	14.2	0.0	10.4	13.6	5.9	12.3	4.5	21.9	21.9	22.3	16.0	16.0
Prop In Lane	1.00		0.25	1.00		1.00	1.00		0.14	1.00		0.15
Lane Grp Cap(c), veh/h	242	0	400	219	421	323	94	744	760	399	1048	1070
V/C Ratio(X)	0.36	0.00	0.48	0.17	0.29	0.56	0.78	0.51	0.51	0.92	0.44	0.44
Avail Cap(c_a), veh/h	272	0	452	254	476	366	165	744	760	542	1048	1070
HCM Platoon Ratio	1.00	1.00	1.00	1.00	1.00	1.00	0.33	0.33	0.33	1.00	1.00	1.00
Upstream Filter(I)	1.00	0.00	1.00	1.00	1.00	1.00	0.94	0.94	0.94	0.10	0.10	0.10
Uniform Delay (d), s/veh	41.1	0.0	37.0	42.9	35.2	37.7	53.4	36.9	36.9	41.7	12.4	12.4
Incr Delay (d2), s/veh	0.3	0.0	0.3	0.1	0.1	0.6	4.8	2.4	2.3	2.1	0.1	0.1
Initial Q Delay(d3),s/veh	0.0	0.0	0.0	0.0	0.0	0.0	0.0	0.0	0.0	0.0	0.0	0.0
%ile BackOfQ(50%),veh/ln	2.4	0.0	5.1	1.0	3.0	4.9	2.3	11.2	11.5	11.2	7.8	8.0
LnGrp Delay(d),s/veh	41.5	0.0	37.3	43.1	35.4	38.3	58.2	39.3	39.2	43.8	12.5	12.5
LnGrp LOS	D		D	D	D	D	E	D	D	D	B	B
Approach Vol, veh/h		279			339			842			1308	
Approach Delay, s/veh		38.6			37.8			40.9			21.3	
Approach LOS		D			D			D			C	

Timer	1	2	3	4	5	6	7	8
Assigned Phs	1	2		4	5	6		8
Phs Duration (G+Y+Rc), s	29.1	51.1		29.7	10.2	70.0		29.7
Change Period (Y+Rc), s	4.4	4.9		4.9	4.4	4.9		4.9
Max Green Setting (Gmax), s	33.6	34.1		28.1	10.2	57.5		28.1
Max Q Clear Time (g_c+I1), s	24.3	23.9		16.2	6.5	18.0		15.6
Green Ext Time (p_c), s	0.4	9.5		1.6	0.0	32.5		1.6

Intersection Summary	
HCM 2010 Ctrl Delay	31.0
HCM 2010 LOS	C

Movement	EBL	EBT	EBR	WBL	WBT	WBR	NBL	NBT	NBR	SBL	SBT	SBR
Lane Configurations												
Volume (veh/h)	91	379	329	552	518	127	201	449	419	109	604	112
Number	5	2	12	1	6	16	3	8	18	7	4	14
Initial Q (Qb), veh	0	0	0	0	0	0	0	0	0	0	0	0
Ped-Bike Adj(A_pbT)	1.00		0.97	1.00		0.98	1.00		0.96	1.00		0.89
Parking Bus, Adj	1.00	1.00	1.00	1.00	1.00	1.00	1.00	1.00	1.00	1.00	1.00	1.00
Adj Sat Flow, veh/h/ln	1863	1863	1863	1863	1863	1863	1863	1863	1863	1863	1863	1900
Adj Flow Rate, veh/h	96	399	346	581	545	134	212	473	441	115	636	118
Adj No. of Lanes	1	2	1	2	2	1	1	2	1	2	2	0
Peak Hour Factor	0.95	0.95	0.95	0.95	0.95	0.95	0.95	0.95	0.95	0.95	0.95	0.95
Percent Heavy Veh, %	2	2	2	2	2	2	2	2	2	2	2	2
Cap, veh/h	119	977	425	433	1184	520	239	1396	602	166	899	166
Arrive On Green	0.07	0.28	0.28	0.13	0.33	0.33	0.13	0.39	0.39	0.05	0.31	0.31
Sat Flow, veh/h	1774	3539	1542	3442	3539	1555	1774	3539	1525	3442	2916	539
Grp Volume(v), veh/h	96	399	346	581	545	134	212	473	441	115	385	369
Grp Sat Flow(s),veh/h/ln	1774	1770	1542	1721	1770	1555	1774	1770	1525	1721	1770	1686
Q Serve(g_s), s	6.6	11.4	26.0	15.6	15.0	7.8	14.6	11.6	30.5	4.1	23.9	24.0
Cycle Q Clear(g_c), s	6.6	11.4	26.0	15.6	15.0	7.8	14.6	11.6	30.5	4.1	23.9	24.0
Prop In Lane	1.00		1.00	1.00		1.00	1.00		1.00	1.00		0.32
Lane Grp Cap(c), veh/h	119	977	425	433	1184	520	239	1396	602	166	545	519
V/C Ratio(X)	0.81	0.41	0.81	1.34	0.46	0.26	0.89	0.34	0.73	0.69	0.71	0.71
Avail Cap(c_a), veh/h	166	977	425	433	1184	520	295	1396	602	197	545	519
HCM Platoon Ratio	1.00	1.00	1.00	1.00	1.00	1.00	1.00	1.00	1.00	1.00	1.00	1.00
Upstream Filter(I)	1.00	1.00	1.00	1.00	1.00	1.00	0.88	0.88	0.88	1.00	1.00	1.00
Uniform Delay (d), s/veh	57.0	36.6	41.9	54.2	32.4	30.0	52.8	26.3	32.0	58.1	37.9	38.0
Incr Delay (d2), s/veh	12.3	1.3	15.6	168.7	1.3	1.2	18.7	0.6	6.8	5.5	7.5	8.0
Initial Q Delay(d3),s/veh	0.0	0.0	0.0	0.0	0.0	0.0	0.0	0.0	0.0	0.0	0.0	0.0
%ile BackOfQ(50%),veh/ln	3.7	5.8	12.9	17.5	7.6	3.5	8.4	5.8	14.0	2.1	12.8	12.3
LnGrp Delay(d),s/veh	69.4	37.9	57.5	222.9	33.7	31.2	71.4	26.8	38.8	63.6	45.5	46.0
LnGrp LOS	E	D	E	F	C	C	E	C	D	E	D	D
Approach Vol, veh/h		841			1260			1126			869	
Approach Delay, s/veh		49.5			120.7			39.9			48.1	
Approach LOS		D			F			D			D	

Timer	1	2	3	4	5	6	7	8
Assigned Phs	1	2	3	4	5	6	7	8
Phs Duration (G+Y+Rc), s	20.0	39.5	21.1	43.4	12.7	46.8	10.4	54.1
Change Period (Y+Rc), s	4.4	5.3	4.4	5.2	4.4	5.3	4.4	* 5.2
Max Green Setting (Gmax), s	15.6	33.4	20.6	35.1	11.6	37.4	7.1	* 49
Max Q Clear Time (g_c+I1), s	17.6	28.0	16.6	26.0	8.6	17.0	6.1	32.5
Green Ext Time (p_c), s	0.0	4.2	0.1	7.6	0.0	12.3	0.0	12.6

Intersection Summary	
HCM 2010 Ctrl Delay	68.5
HCM 2010 LOS	E

Notes

* HCM 2010 computational engine requires equal clearance times for the phases crossing the barrier.

Movement	WBL	WBR	NBT	NBR	SBL	SBT
Lane Configurations						
Volume (veh/h)	498	126	1214	680	350	1223
Number	3	18	2	12	1	6
Initial Q (Qb), veh	0	0	0	0	0	0
Ped-Bike Adj(A_pbT)	1.00	1.00		0.98	1.00	
Parking Bus, Adj	1.00	1.00	1.00	1.00	1.00	1.00
Adj Sat Flow, veh/h/ln	1863	1863	1863	1863	1863	1863
Adj Flow Rate, veh/h	519	131	1265	708	365	1274
Adj No. of Lanes	2	1	2	1	2	2
Peak Hour Factor	0.96	0.96	0.96	0.96	0.96	0.96
Percent Heavy Veh, %	2	2	2	2	2	2
Cap, veh/h	623	278	1804	1066	445	2433
Arrive On Green	0.18	0.18	0.51	0.51	0.13	0.69
Sat Flow, veh/h	3548	1583	3632	1546	3442	3632
Grp Volume(v), veh/h	519	131	1265	708	365	1274
Grp Sat Flow(s),veh/h/ln	1774	1583	1770	1546	1721	1770
Q Serve(g_s), s	12.8	6.7	24.7	24.1	9.4	15.9
Cycle Q Clear(g_c), s	12.8	6.7	24.7	24.1	9.4	15.9
Prop In Lane	1.00	1.00		1.00	1.00	
Lane Grp Cap(c), veh/h	623	278	1804	1066	445	2433
V/C Ratio(X)	0.83	0.47	0.70	0.66	0.82	0.52
Avail Cap(c_a), veh/h	1061	474	1804	1066	608	2590
HCM Platoon Ratio	1.00	1.00	1.00	1.00	1.00	1.00
Upstream Filter(I)	1.00	1.00	1.00	1.00	1.00	1.00
Uniform Delay (d), s/veh	36.1	33.6	16.9	8.3	38.4	6.9
Incr Delay (d2), s/veh	1.1	0.5	1.4	1.8	4.6	0.4
Initial Q Delay(d3),s/veh	0.0	0.0	0.0	0.0	0.0	0.0
%ile BackOfQ(50%),veh/ln	6.4	3.0	12.3	16.5	4.7	7.7
LnGrp Delay(d),s/veh	37.2	34.0	18.3	10.0	43.1	7.3
LnGrp LOS	D	C	B	B	D	A
Approach Vol, veh/h	650		1973			1639
Approach Delay, s/veh	36.6		15.3			15.3
Approach LOS	D		B			B

Timer	1	2	3	4	5	6	7	8
Assigned Phs	1	2				6		8
Phs Duration (G+Y+Rc), s	16.1	52.4				68.5		22.1
Change Period (Y+Rc), s	4.4	6.2				* 6.2		6.2
Max Green Setting (Gmax), s	15.6	45.1				* 66		27.1
Max Q Clear Time (g_c+I1), s	11.4	26.7				17.9		14.8
Green Ext Time (p_c), s	0.3	18.0				44.4		1.1

Intersection Summary	
HCM 2010 Ctrl Delay	18.6
HCM 2010 LOS	B

Notes

User approved volume balancing among the lanes for turning movement.

Movement	EBL	EBT	WBT	WBR	SBL	SBR
Lane Configurations						
Volume (veh/h)	150	677	349	291	221	224
Number	5	2	6	16	7	14
Initial Q (Qb), veh	0	0	0	0	0	0
Ped-Bike Adj(A_pbT)	1.00			1.00	1.00	1.00
Parking Bus, Adj	1.00	1.00	1.00	1.00	1.00	1.00
Adj Sat Flow, veh/h/ln	1863	1863	1863	1863	1863	1863
Adj Flow Rate, veh/h	158	713	367	306	307	156
Adj No. of Lanes	1	2	2	1	2	1
Peak Hour Factor	0.95	0.95	0.95	0.95	0.95	0.95
Percent Heavy Veh, %	2	2	2	2	2	2
Cap, veh/h	204	2205	1522	972	653	291
Arrive On Green	0.11	0.62	0.43	0.43	0.18	0.18
Sat Flow, veh/h	1774	3632	3632	1583	3548	1583
Grp Volume(v), veh/h	158	713	367	306	307	156
Grp Sat Flow(s),veh/h/ln	1774	1770	1770	1583	1774	1583
Q Serve(g_s), s	4.9	5.4	3.7	5.2	4.4	5.0
Cycle Q Clear(g_c), s	4.9	5.4	3.7	5.2	4.4	5.0
Prop In Lane	1.00			1.00	1.00	1.00
Lane Grp Cap(c), veh/h	204	2205	1522	972	653	291
V/C Ratio(X)	0.77	0.32	0.24	0.31	0.47	0.54
Avail Cap(c_a), veh/h	930	4638	2532	1424	1577	704
HCM Platoon Ratio	1.00	1.00	1.00	1.00	1.00	1.00
Upstream Filter(I)	1.00	1.00	1.00	1.00	1.00	1.00
Uniform Delay (d), s/veh	24.3	5.0	10.2	5.2	20.6	20.9
Incr Delay (d2), s/veh	2.4	0.2	0.1	0.3	1.1	3.2
Initial Q Delay(d3),s/veh	0.0	0.0	0.0	0.0	0.0	0.0
%ile BackOfQ(50%),veh/ln	2.5	2.6	1.8	3.4	2.2	4.7
LnGrp Delay(d),s/veh	26.7	5.2	10.4	5.5	21.7	24.1
LnGrp LOS	C	A	B	A	C	C
Approach Vol, veh/h		871	673		463	
Approach Delay, s/veh		9.1	8.1		22.5	
Approach LOS		A	A		C	

Timer	1	2	3	4	5	6	7	8
Assigned Phs		2		4	5	6		
Phs Duration (G+Y+Rc), s		41.2		15.3	10.9	30.3		
Change Period (Y+Rc), s		6.0		4.9	4.4	* 6		
Max Green Setting (Gmax), s		74.0		25.1	29.6	* 40		
Max Q Clear Time (g_c+I1), s		7.4		7.0	6.9	7.2		
Green Ext Time (p_c), s		22.4		3.4	0.2	17.1		

Intersection Summary	
HCM 2010 Ctrl Delay	11.9
HCM 2010 LOS	B

Notes

User approved volume balancing among the lanes for turning movement.

Movement	EBL	EBT	EBR	WBL	WBT	WBR	NBL	NBT	NBR	SBL	SBT	SBR
Lane Configurations												
Volume (veh/h)	63	939	35	38	530	49	24	4	24	102	7	50
Number	5	2	12	1	6	16	3	8	18	7	4	14
Initial Q (Qb), veh	0	0	0	0	0	0	0	0	0	0	0	0
Ped-Bike Adj(A_pbT)	1.00		1.00	1.00		1.00	1.00		1.00	1.00		1.00
Parking Bus, Adj	1.00	1.00	1.00	1.00	1.00	1.00	1.00	1.00	1.00	1.00	1.00	1.00
Adj Sat Flow, veh/h/ln	1863	1863	1900	1863	1863	1900	1900	1863	1863	1863	1863	1900
Adj Flow Rate, veh/h	67	999	37	40	564	52	26	4	26	109	7	53
Adj No. of Lanes	1	2	0	1	2	0	0	1	1	1	1	0
Peak Hour Factor	0.94	0.94	0.94	0.94	0.94	0.94	0.94	0.94	0.94	0.94	0.94	0.94
Percent Heavy Veh, %	2	2	2	2	2	2	2	2	2	2	2	2
Cap, veh/h	86	2125	79	53	1941	179	238	30	246	246	29	222
Arrive On Green	0.05	0.61	0.61	0.03	0.59	0.59	0.16	0.16	0.16	0.16	0.16	0.16
Sat Flow, veh/h	1774	3481	129	1774	3278	302	953	196	1583	1374	188	1424
Grp Volume(v), veh/h	67	508	528	40	304	312	30	0	26	109	0	60
Grp Sat Flow(s),veh/h/ln	1774	1770	1840	1774	1770	1810	1149	0	1583	1374	0	1612
Q Serve(g_s), s	2.8	11.8	11.8	1.7	6.4	6.4	1.0	0.0	1.1	5.8	0.0	2.5
Cycle Q Clear(g_c), s	2.8	11.8	11.8	1.7	6.4	6.4	3.5	0.0	1.1	9.3	0.0	2.5
Prop In Lane	1.00		0.07	1.00		0.17	0.87		1.00	1.00		0.88
Lane Grp Cap(c), veh/h	86	1081	1124	53	1048	1072	268	0	246	246	0	251
V/C Ratio(X)	0.78	0.47	0.47	0.75	0.29	0.29	0.11	0.00	0.11	0.44	0.00	0.24
Avail Cap(c_a), veh/h	250	1279	1330	179	1201	1228	664	0	698	637	0	710
HCM Platoon Ratio	1.00	1.00	1.00	1.00	1.00	1.00	1.00	1.00	1.00	1.00	1.00	1.00
Upstream Filter(I)	1.00	1.00	1.00	1.00	1.00	1.00	1.00	0.00	1.00	1.00	0.00	1.00
Uniform Delay (d), s/veh	35.4	8.0	8.0	36.2	7.5	7.5	28.6	0.0	27.2	32.4	0.0	27.8
Incr Delay (d2), s/veh	5.6	1.2	1.2	7.5	0.7	0.7	0.1	0.0	0.1	0.5	0.0	0.2
Initial Q Delay(d3),s/veh	0.0	0.0	0.0	0.0	0.0	0.0	0.0	0.0	0.0	0.0	0.0	0.0
%ile BackOfQ(50%),veh/ln	1.5	6.0	6.2	0.9	3.2	3.3	0.6	0.0	0.5	2.2	0.0	1.1
LnGrp Delay(d),s/veh	41.0	9.2	9.2	43.7	8.2	8.2	28.7	0.0	27.3	32.8	0.0	28.0
LnGrp LOS	D	A	A	D	A	A	C		C	C		C
Approach Vol, veh/h		1103			656			56			169	
Approach Delay, s/veh		11.1			10.4			28.0			31.1	
Approach LOS		B			B			C			C	

Timer	1	2	3	4	5	6	7	8
Assigned Phs	1	2		4	5	6		8
Phs Duration (G+Y+Rc), s	6.7	51.9		16.6	8.0	50.5		16.6
Change Period (Y+Rc), s	4.4	* 6		4.9	4.4	6.0		4.9
Max Green Setting (Gmax), s	7.6	* 54		33.1	10.6	51.0		33.1
Max Q Clear Time (g_c+I1), s	3.7	13.8		11.3	4.8	8.4		5.5
Green Ext Time (p_c), s	0.0	32.1		0.5	0.0	33.4		0.5

Intersection Summary	
HCM 2010 Ctrl Delay	13.1
HCM 2010 LOS	B

Notes

* HCM 2010 computational engine requires equal clearance times for the phases crossing the barrier.

Movement	EBL	EBT	WBT	WBR	SBL	SBR
Lane Configurations						
Volume (veh/h)	142	1032	659	284	385	107
Number	5	2	6	16	7	14
Initial Q (Qb), veh	0	0	0	0	0	0
Ped-Bike Adj(A_pbT)	1.00			0.97	1.00	1.00
Parking Bus, Adj	1.00	1.00	1.00	1.00	1.00	1.00
Adj Sat Flow, veh/h/ln	1863	1863	1863	1863	1863	1863
Adj Flow Rate, veh/h	148	1075	686	296	401	111
Adj No. of Lanes	1	2	2	1	1	1
Peak Hour Factor	0.96	0.96	0.96	0.96	0.96	0.96
Percent Heavy Veh, %	2	2	2	2	2	2
Cap, veh/h	208	1956	1270	552	487	435
Arrive On Green	0.12	0.55	0.36	0.36	0.27	0.27
Sat Flow, veh/h	1774	3632	3632	1539	1774	1583
Grp Volume(v), veh/h	148	1075	686	296	401	111
Grp Sat Flow(s),veh/h/ln	1774	1770	1770	1539	1774	1583
Q Serve(g_s), s	4.6	11.2	8.8	8.8	12.2	3.1
Cycle Q Clear(g_c), s	4.6	11.2	8.8	8.8	12.2	3.1
Prop In Lane	1.00			1.00	1.00	1.00
Lane Grp Cap(c), veh/h	208	1956	1270	552	487	435
V/C Ratio(X)	0.71	0.55	0.54	0.54	0.82	0.26
Avail Cap(c_a), veh/h	544	3348	1979	860	1113	993
HCM Platoon Ratio	1.00	1.00	1.00	1.00	1.00	1.00
Upstream Filter(I)	1.00	1.00	1.00	1.00	1.00	1.00
Uniform Delay (d), s/veh	24.4	8.2	14.6	14.6	19.5	16.2
Incr Delay (d2), s/veh	1.7	0.1	0.1	0.3	3.5	0.3
Initial Q Delay(d3),s/veh	0.0	0.0	0.0	0.0	0.0	0.0
%ile BackOfQ(50%),veh/ln	2.4	5.4	4.3	7.8	6.4	3.1
LnGrp Delay(d),s/veh	26.1	8.4	14.8	14.9	23.1	16.5
LnGrp LOS	C	A	B	B	C	B
Approach Vol, veh/h		1223	982		512	
Approach Delay, s/veh		10.5	14.8		21.6	
Approach LOS		B	B		C	

Timer	1	2	3	4	5	6	7	8
Assigned Phs		2		4	5	6		
Phs Duration (G+Y+Rc), s		37.6		19.8	11.1	26.5		
Change Period (Y+Rc), s		* 5.9		4.0	4.4	5.9		
Max Green Setting (Gmax), s		* 54		36.0	17.6	32.1		
Max Q Clear Time (g_c+I1), s		13.2		14.2	6.6	10.8		
Green Ext Time (p_c), s		11.9		1.6	0.1	9.6		

Intersection Summary	
HCM 2010 Ctrl Delay	14.2
HCM 2010 LOS	B

Notes

* HCM 2010 computational engine requires equal clearance times for the phases crossing the barrier.

Movement	EBL	EBT	EBR	WBL	WBT	WBR	NBL	NBT	NBR	SBL	SBT	SBR
Lane Configurations												
Volume (veh/h)	5	1481	263	156	576	10	260	4	319	11	4	0
Number	5	2	12	1	6	16	3	8	18	7	4	14
Initial Q (Qb), veh	0	0	0	0	0	0	0	0	0	0	0	0
Ped-Bike Adj(A_pbT)	1.00		0.99	1.00		0.97	1.00		0.98	1.00		1.00
Parking Bus, Adj	1.00	1.00	1.00	1.00	1.00	1.00	1.00	1.00	1.00	1.00	1.00	1.00
Adj Sat Flow, veh/h/ln	1863	1863	1900	1863	1863	1900	1900	1863	1863	1900	1863	1900
Adj Flow Rate, veh/h	5	1610	286	170	626	11	283	4	347	12	4	0
Adj No. of Lanes	1	3	0	2	2	0	0	1	1	0	1	0
Peak Hour Factor	0.92	0.92	0.92	0.92	0.92	0.92	0.92	0.92	0.92	0.92	0.92	0.92
Percent Heavy Veh, %	2	2	2	2	2	2	2	2	2	2	2	2
Cap, veh/h	9	2561	452	220	2308	41	376	5	465	78	20	0
Arrive On Green	0.01	0.59	0.59	0.13	1.00	1.00	0.23	0.23	0.23	0.23	0.23	0.00
Sat Flow, veh/h	1774	4340	767	3442	3556	62	1382	20	1553	135	84	0
Grp Volume(v), veh/h	5	1256	640	170	311	326	287	0	347	16	0	0
Grp Sat Flow(s),veh/h/ln	1774	1695	1716	1721	1770	1849	1401	0	1553	219	0	0
Q Serve(g_s), s	0.4	32.8	33.2	6.5	0.0	0.0	0.0	0.0	27.5	0.8	0.0	0.0
Cycle Q Clear(g_c), s	0.4	32.8	33.2	6.5	0.0	0.0	26.9	0.0	27.5	27.6	0.0	0.0
Prop In Lane	1.00		0.45	1.00		0.03	0.99		1.00	0.75		0.00
Lane Grp Cap(c), veh/h	9	2001	1013	220	1149	1200	381	0	465	98	0	0
V/C Ratio(X)	0.56	0.63	0.63	0.77	0.27	0.27	0.75	0.00	0.75	0.16	0.00	0.00
Avail Cap(c_a), veh/h	53	2001	1013	547	1149	1200	499	0	596	195	0	0
HCM Platoon Ratio	1.00	1.00	1.00	2.00	2.00	2.00	1.00	1.00	1.00	1.00	1.00	1.00
Upstream Filter(I)	0.75	0.75	0.75	0.95	0.95	0.95	1.00	0.00	1.00	1.00	0.00	0.00
Uniform Delay (d), s/veh	67.5	18.1	18.2	58.3	0.0	0.0	50.2	0.0	43.1	48.1	0.0	0.0
Incr Delay (d2), s/veh	14.1	1.1	2.3	2.1	0.6	0.5	3.5	0.0	2.9	0.4	0.0	0.0
Initial Q Delay(d3),s/veh	0.0	0.0	0.0	0.0	0.0	0.0	0.0	0.0	0.0	0.0	0.0	0.0
%ile BackOfQ(50%),veh/ln	0.2	15.7	16.3	3.1	0.2	0.2	10.7	0.0	12.2	0.6	0.0	0.0
LnGrp Delay(d),s/veh	81.6	19.3	20.5	60.4	0.6	0.5	53.7	0.0	46.0	48.5	0.0	0.0
LnGrp LOS	F	B	C	E	A	A	D		D	D		
Approach Vol, veh/h		1901			807			634			16	
Approach Delay, s/veh		19.8			13.1			49.5			48.5	
Approach LOS		B			B			D			D	

Timer	1	2	3	4	5	6	7	8
Assigned Phs	1	2		4	5	6		8
Phs Duration (G+Y+Rc), s	13.1	86.2		36.7	5.1	94.2		36.7
Change Period (Y+Rc), s	4.4	5.9		4.9	4.4	* 5.9		4.9
Max Green Setting (Gmax), s	21.6	55.9		43.3	4.1	* 74		43.3
Max Q Clear Time (g_c+I1), s	8.5	35.2		29.6	2.4	2.0		29.5
Green Ext Time (p_c), s	0.2	16.2		1.8	0.0	36.3		1.8

Intersection Summary	
HCM 2010 Ctrl Delay	24.0
HCM 2010 LOS	C

Notes

* HCM 2010 computational engine requires equal clearance times for the phases crossing the barrier.

Movement	EBL	EBT	EBR	WBL	WBT	WBR	NBL	NBT	NBR	SBL	SBT	SBR
Lane Configurations												
Volume (veh/h)	4	1743	68	216	908	0	59	0	275	0	0	0
Number	5	2	12	1	6	16	3	8	18			
Initial Q (Qb), veh	0	0	0	0	0	0	0	0	0			
Ped-Bike Adj(A_pbT)	1.00		1.00	1.00		1.00	1.00		1.00			
Parking Bus, Adj	1.00	1.00	1.00	1.00	1.00	1.00	1.00	1.00	1.00			
Adj Sat Flow, veh/h/ln	1863	1863	1900	1863	1863	0	1863	0	1863			
Adj Flow Rate, veh/h	4	1854	72	230	966	0	63	0	293			
Adj No. of Lanes	1	3	0	2	2	0	1	0	1			
Peak Hour Factor	0.92	0.94	0.94	0.94	0.94	0.92	0.94	0.92	0.94			
Percent Heavy Veh, %	2	2	2	2	2	0	2	0	2			
Cap, veh/h	7	3085	120	282	2459	0	354	0	316			
Arrive On Green	0.01	1.00	1.00	0.08	0.69	0.00	0.20	0.00	0.20			
Sat Flow, veh/h	1774	5023	195	3442	3632	0	1774	0	1583			
Grp Volume(v), veh/h	4	1251	675	230	966	0	63	0	293			
Grp Sat Flow(s),veh/h/ln	1774	1695	1827	1721	1770	0	1774	0	1583			
Q Serve(g_s), s	0.3	0.0	0.0	8.9	15.6	0.0	4.0	0.0	24.7			
Cycle Q Clear(g_c), s	0.3	0.0	0.0	8.9	15.6	0.0	4.0	0.0	24.7			
Prop In Lane	1.00		0.11	1.00		0.00	1.00		1.00			
Lane Grp Cap(c), veh/h	7	2082	1122	282	2459	0	354	0	316			
V/C Ratio(X)	0.55	0.60	0.60	0.82	0.39	0.00	0.18	0.00	0.93			
Avail Cap(c_a), veh/h	52	2082	1122	420	2459	0	451	0	403			
HCM Platoon Ratio	2.00	2.00	2.00	1.00	1.00	1.00	1.00	1.00	1.00			
Upstream Filter(I)	0.68	0.68	0.68	1.00	1.00	0.00	1.00	0.00	1.00			
Uniform Delay (d), s/veh	67.3	0.0	0.0	61.4	8.7	0.0	45.2	0.0	53.5			
Incr Delay (d2), s/veh	36.8	0.9	1.6	4.5	0.5	0.0	0.1	0.0	21.7			
Initial Q Delay(d3),s/veh	0.0	0.0	0.0	0.0	0.0	0.0	0.0	0.0	0.0			
%ile BackOfQ(50%),veh/ln	0.2	0.3	0.5	4.4	7.7	0.0	2.0	0.0	12.7			
LnGrp Delay(d),s/veh	104.1	0.9	1.6	65.9	9.2	0.0	45.3	0.0	75.2			
LnGrp LOS	F	A	A	E	A		D		E			
Approach Vol, veh/h		1930			1196			356				
Approach Delay, s/veh		1.4			20.1			69.9				
Approach LOS		A			C			E				

Timer	1	2	3	4	5	6	7	8
Assigned Phs	1	2			5	6		8
Phs Duration (G+Y+Rc), s	15.5	88.9			4.6	99.9		31.5
Change Period (Y+Rc), s	4.4	5.4			4.0	* 5.4		4.4
Max Green Setting (Gmax), s	15.6	70.6			4.0	* 84		34.6
Max Q Clear Time (g_c+I1), s	10.9	2.0			2.3	17.6		26.7
Green Ext Time (p_c), s	0.2	52.1			0.0	50.7		0.4

Intersection Summary	
HCM 2010 Ctrl Delay	14.8
HCM 2010 LOS	B

Notes

* HCM 2010 computational engine requires equal clearance times for the phases crossing the barrier.

Movement	EBL	EBT	EBR	WBL	WBT	WBR	NBL	NBT	NBR	SBL	SBT	SBR
Lane Configurations												
Volume (veh/h)	10	1926	80	606	1151	17	43	1	114	18	1	2
Number	5	2	12	1	6	16	3	8	18	7	4	14
Initial Q (Qb), veh	0	0	0	0	0	0	0	0	0	0	0	0
Ped-Bike Adj(A_pbT)	1.00		1.00	1.00		1.00	0.98		1.00	1.00		0.98
Parking Bus, Adj	1.00	1.00	1.00	1.00	1.00	1.00	1.00	1.00	1.00	1.00	1.00	1.00
Adj Sat Flow, veh/h/ln	1863	1863	1900	1863	1863	1900	1863	1863	1863	1863	1863	1900
Adj Flow Rate, veh/h	10	2006	83	631	1199	18	45	0	120	19	1	2
Adj No. of Lanes	1	3	0	2	3	0	1	0	2	1	1	0
Peak Hour Factor	0.96	0.96	0.96	0.96	0.96	0.96	0.96	0.96	0.96	0.96	0.96	0.96
Percent Heavy Veh, %	2	2	2	2	2	2	2	2	2	2	2	2
Cap, veh/h	16	3213	133	675	4275	64	126	0	172	122	30	60
Arrive On Green	0.01	0.64	0.64	0.39	1.00	1.00	0.05	0.00	0.05	0.05	0.05	0.05
Sat Flow, veh/h	1774	5010	207	3442	5162	77	1385	0	3167	1266	549	1098
Grp Volume(v), veh/h	10	1356	733	631	787	430	45	0	120	19	0	3
Grp Sat Flow(s),veh/h/ln	1774	1695	1826	1721	1695	1849	1385	0	1583	1266	0	1647
Q Serve(g_s), s	0.8	32.5	32.7	23.9	0.0	0.0	4.3	0.0	5.1	2.0	0.0	0.2
Cycle Q Clear(g_c), s	0.8	32.5	32.7	23.9	0.0	0.0	4.6	0.0	5.1	2.0	0.0	0.2
Prop In Lane	1.00		0.11	1.00		0.04	1.00		1.00	1.00		0.67
Lane Grp Cap(c), veh/h	16	2175	1171	675	2808	1531	126	0	172	122	0	90
V/C Ratio(X)	0.61	0.62	0.63	0.93	0.28	0.28	0.36	0.00	0.70	0.16	0.00	0.03
Avail Cap(c_a), veh/h	125	2175	1171	800	2808	1531	357	0	701	333	0	365
HCM Platoon Ratio	1.00	1.00	1.00	2.00	2.00	2.00	1.00	1.00	1.00	1.00	1.00	1.00
Upstream Filter(I)	1.00	1.00	1.00	0.29	0.29	0.29	1.00	0.00	1.00	1.00	0.00	1.00
Uniform Delay (d), s/veh	67.1	14.6	14.6	40.5	0.0	0.0	63.1	0.0	63.2	61.7	0.0	60.9
Incr Delay (d2), s/veh	12.8	1.4	2.5	5.6	0.1	0.1	0.6	0.0	1.9	0.2	0.0	0.1
Initial Q Delay(d3),s/veh	0.0	0.0	0.0	0.0	0.0	0.0	0.0	0.0	0.0	0.0	0.0	0.0
%ile BackOfQ(50%),veh/ln	0.4	15.5	17.1	11.7	0.0	0.1	1.7	0.0	2.3	0.7	0.0	0.1
LnGrp Delay(d),s/veh	79.9	15.9	17.1	46.1	0.1	0.1	63.7	0.0	65.1	62.0	0.0	61.0
LnGrp LOS	E	B	B	D	A	A	E		E	E		E
Approach Vol, veh/h		2099			1848			165			22	
Approach Delay, s/veh		16.7			15.8			64.7			61.8	
Approach LOS		B			B			E			E	

Timer	1	2	3	4	5	6	7	8
Assigned Phs	1	2		4	5	6		8
Phs Duration (G+Y+Rc), s	31.1	92.6		12.3	5.7	118.0		12.3
Change Period (Y+Rc), s	4.4	5.4		4.9	4.4	* 5.4		4.9
Max Green Setting (Gmax), s	31.6	59.6		30.1	9.6	* 82		30.1
Max Q Clear Time (g_c+I1), s	25.9	34.7		4.0	2.8	2.0		7.1
Green Ext Time (p_c), s	0.7	23.3		0.3	0.0	65.8		0.3

Intersection Summary	
HCM 2010 Ctrl Delay	18.4
HCM 2010 LOS	B

Notes

User approved volume balancing among the lanes for turning movement.

Movement	EBL	EBT	EBR	WBL	WBT	WBR	NBL	NBT	NBR	SBL	SBT	SBR
Lane Configurations												
Volume (veh/h)	98	1451	605	0	1299	554	324	56	830	297	2	151
Number	5	2	12	1	6	16	3	8	18	7	4	14
Initial Q (Qb), veh	0	0	0	0	0	0	0	0	0	0	0	0
Ped-Bike Adj(A_pbT)	1.00		1.00	1.00		1.00	1.00		1.00	1.00		0.98
Parking Bus, Adj	1.00	1.00	1.00	1.00	1.00	1.00	1.00	1.00	1.00	1.00	1.00	1.00
Adj Sat Flow, veh/h/ln	1863	1863	1863	0	1863	1863	1863	1863	1863	1863	1900	1863
Adj Flow Rate, veh/h	102	1511	0	0	1353	577	379	0	0	309	2	157
Adj No. of Lanes	1	3	1	0	3	1	2	0	1	2	0	1
Peak Hour Factor	0.96	0.96	0.96	0.96	0.96	0.96	0.96	0.96	0.96	0.96	0.96	0.96
Percent Heavy Veh, %	2	2	2	0	2	2	2	2	2	2	2	2
Cap, veh/h	192	1976	615	0	1270	396	447	0	199	431	0	195
Arrive On Green	0.04	0.13	0.00	0.00	0.25	0.25	0.13	0.00	0.00	0.13	0.13	0.13
Sat Flow, veh/h	1774	5085	1583	0	5253	1583	3548	0	1583	3442	0	1553
Grp Volume(v), veh/h	102	1511	0	0	1353	577	379	0	0	309	0	157
Grp Sat Flow(s),veh/h/ln	1774	1695	1583	0	1695	1583	1774	0	1583	1721	0	1553
Q Serve(g_s), s	7.7	39.1	0.0	0.0	34.0	34.0	14.2	0.0	0.0	11.7	0.0	13.4
Cycle Q Clear(g_c), s	7.7	39.1	0.0	0.0	34.0	34.0	14.2	0.0	0.0	11.7	0.0	13.4
Prop In Lane	1.00		1.00	0.00		1.00	1.00		1.00	1.00		1.00
Lane Grp Cap(c), veh/h	192	1976	615	0	1270	396	447	0	199	431	0	195
V/C Ratio(X)	0.53	0.76	0.00	0.00	1.07	1.46	0.85	0.00	0.00	0.72	0.00	0.81
Avail Cap(c_a), veh/h	209	2019	629	0	1270	396	642	0	286	1043	0	470
HCM Platoon Ratio	0.33	0.33	0.33	1.00	1.00	1.00	1.00	1.00	1.00	1.00	1.00	1.00
Upstream Filter(I)	0.66	0.66	0.00	0.00	0.24	0.24	1.00	0.00	0.00	1.00	0.00	1.00
Uniform Delay (d), s/veh	62.2	53.3	0.0	0.0	51.0	51.0	58.2	0.0	0.0	57.2	0.0	57.9
Incr Delay (d2), s/veh	1.5	1.2	0.0	0.0	34.0	209.9	7.3	0.0	0.0	2.2	0.0	7.7
Initial Q Delay(d3),s/veh	0.0	0.0	0.0	0.0	0.0	0.0	0.0	0.0	0.0	0.0	0.0	0.0
%ile BackOfQ(50%),veh/ln	3.9	18.6	0.0	0.0	19.9	37.9	7.4	0.0	0.0	5.7	0.0	6.2
LnGrp Delay(d),s/veh	63.7	54.4	0.0	0.0	85.0	260.9	65.5	0.0	0.0	59.4	0.0	65.6
LnGrp LOS	E	D			F	F	E			E		E
Approach Vol, veh/h		1613			1930			379			466	
Approach Delay, s/veh		55.0			137.6			65.5			61.5	
Approach LOS		E			F			E			E	

Timer	1	2	3	4	5	6	7	8
Assigned Phs		2		4	5	6		8
Phs Duration (G+Y+Rc), s		59.9		21.6	18.9	41.0		21.7
Change Period (Y+Rc), s		7.0		4.6	* 4.2	7.0		4.6
Max Green Setting (Gmax), s		54.0		41.2	* 16	33.8		24.6
Max Q Clear Time (g_c+I1), s		41.1		15.4	9.7	36.0		16.2
Green Ext Time (p_c), s		11.8		1.7	0.1	0.0		0.9

Intersection Summary	
HCM 2010 Ctrl Delay	92.9
HCM 2010 LOS	F

Notes

User approved volume balancing among the lanes for turning movement.

Movement	EBL	EBT	WBT	WBR	SBL	SBR
Lane Configurations						
Volume (veh/h)	628	1950	1689	818	0	973
Number	5	2	6	16		
Initial Q (Qb), veh	0	0	0	0		
Ped-Bike Adj(A_pbT)	1.00			1.00		
Parking Bus, Adj	1.00	1.00	1.00	1.00		
Adj Sat Flow, veh/h/ln	1863	1863	1863	1863		
Adj Flow Rate, veh/h	675	2097	1816	0		
Adj No. of Lanes	1	3	2	1		
Peak Hour Factor	0.93	0.93	0.93	0.93		
Percent Heavy Veh, %	2	2	2	2		
Cap, veh/h	693	4910	1947	871		
Arrive On Green	0.39	0.97	0.55	0.00		
Sat Flow, veh/h	1774	5253	3632	1583		
Grp Volume(v), veh/h	675	2097	1816	0		
Grp Sat Flow(s),veh/h/ln	1774	1695	1770	1583		
Q Serve(g_s), s	59.9	3.9	75.9	0.0		
Cycle Q Clear(g_c), s	59.9	3.9	75.9	0.0		
Prop In Lane	1.00			1.00		
Lane Grp Cap(c), veh/h	693	4910	1947	871		
V/C Ratio(X)	0.97	0.43	0.93	0.00		
Avail Cap(c_a), veh/h	710	4910	1947	871		
HCM Platoon Ratio	1.00	1.00	1.00	1.00		
Upstream Filter(I)	0.09	0.09	1.00	0.00		
Uniform Delay (d), s/veh	48.0	0.2	33.3	0.0		
Incr Delay (d2), s/veh	5.5	0.0	9.7	0.0		
Initial Q Delay(d3),s/veh	0.0	0.0	0.0	0.0		
%ile BackOfQ(50%),veh/ln	30.3	1.6	39.5	0.0		
LnGrp Delay(d),s/veh	53.5	0.2	43.0	0.0		
LnGrp LOS	D	A	D			
Approach Vol, veh/h		2772	1816			
Approach Delay, s/veh		13.2	43.0			
Approach LOS		B	D			

Timer	1	2	3	4	5	6	7	8
Assigned Phs		2			5	6		
Phs Duration (G+Y+Rc), s		160.0			66.5	93.5		
Change Period (Y+Rc), s		5.5			4.0	5.5		
Max Green Setting (Gmax), s		154.5			64.0	86.5		
Max Q Clear Time (g_c+I1), s		5.9			61.9	77.9		
Green Ext Time (p_c), s		118.1			0.6	8.5		

Intersection Summary	
HCM 2010 Ctrl Delay	25.0
HCM 2010 LOS	C

APPENDIX G

PEAK HOUR INTERSECTION ANALYSIS WORKSHEETS AND ARTERIAL ANALYSIS WORKSHEETS – EXISTING + CUMULATIVE PROJECTS + PROJECT

Movement	EBL	EBT	EBR	WBL	WBT	WBR	NBL	NBT	NBR	SBL	SBT	SBR
Lane Configurations												
Volume (veh/h)	42	46	81	28	110	60	203	1008	73	122	671	107
Number	7	4	14	3	8	18	5	2	12	1	6	16
Initial Q (Qb), veh	0	0	0	0	0	0	0	0	0	0	0	0
Ped-Bike Adj(A_pbT)	1.00		0.95	1.00		0.96	1.00		1.00	1.00		0.99
Parking Bus, Adj	1.00	1.00	1.00	1.00	1.00	1.00	1.00	1.00	1.00	1.00	1.00	1.00
Adj Sat Flow, veh/h/ln	1863	1863	1863	1863	1863	1863	1863	1863	1900	1863	1863	1863
Adj Flow Rate, veh/h	45	49	87	30	118	65	218	1084	78	131	722	115
Adj No. of Lanes	2	1	1	1	1	1	2	2	0	1	2	1
Peak Hour Factor	0.93	0.93	0.93	0.93	0.93	0.93	0.93	0.93	0.93	0.93	0.93	0.93
Percent Heavy Veh, %	2	2	2	2	2	2	2	2	2	2	2	2
Cap, veh/h	116	233	188	45	217	178	316	1573	113	166	1670	791
Arrive On Green	0.03	0.12	0.12	0.03	0.12	0.12	0.09	0.47	0.47	0.09	0.47	0.47
Sat Flow, veh/h	3442	1863	1505	1774	1863	1525	3442	3349	241	1774	3539	1564
Grp Volume(v), veh/h	45	49	87	30	118	65	218	573	589	131	722	115
Grp Sat Flow(s),veh/h/ln	1721	1863	1505	1774	1863	1525	1721	1770	1820	1774	1770	1564
Q Serve(g_s), s	0.9	1.6	3.7	1.1	4.1	2.7	4.2	17.4	17.4	4.9	9.3	2.7
Cycle Q Clear(g_c), s	0.9	1.6	3.7	1.1	4.1	2.7	4.2	17.4	17.4	4.9	9.3	2.7
Prop In Lane	1.00		1.00	1.00		1.00	1.00		0.13	1.00		1.00
Lane Grp Cap(c), veh/h	116	233	188	45	217	178	316	831	855	166	1670	791
V/C Ratio(X)	0.39	0.21	0.46	0.67	0.54	0.37	0.69	0.69	0.69	0.79	0.43	0.15
Avail Cap(c_a), veh/h	206	843	681	104	829	679	563	907	933	277	1793	845
HCM Platoon Ratio	1.00	1.00	1.00	1.00	1.00	1.00	1.00	1.00	1.00	1.00	1.00	1.00
Upstream Filter(I)	1.00	1.00	1.00	1.00	1.00	1.00	1.00	1.00	1.00	1.00	1.00	1.00
Uniform Delay (d), s/veh	32.4	26.9	27.8	33.1	28.5	27.9	30.2	14.2	14.2	30.4	12.0	9.0
Incr Delay (d2), s/veh	0.8	0.4	1.8	6.1	0.8	0.5	1.0	2.2	2.2	3.1	0.3	0.1
Initial Q Delay(d3),s/veh	0.0	0.0	0.0	0.0	0.0	0.0	0.0	0.0	0.0	0.0	0.0	0.0
%ile BackOfQ(50%),veh/ln	0.4	0.9	1.6	0.6	2.1	1.2	2.0	8.9	9.2	2.5	4.6	1.2
LnGrp Delay(d),s/veh	33.2	27.4	29.6	39.2	29.3	28.4	31.2	16.4	16.4	33.5	12.3	9.2
LnGrp LOS	C	C	C	D	C	C	C	B	B	C	B	A
Approach Vol, veh/h		181			213			1380			968	
Approach Delay, s/veh		29.9			30.4			18.8			14.8	
Approach LOS		C			C			B			B	

Timer	1	2	3	4	5	6	7	8
Assigned Phs	1	2	3	4	5	6	7	8
Phs Duration (G+Y+Rc), s	10.8	37.5	6.1	14.1	10.7	37.6	6.7	13.5
Change Period (Y+Rc), s	4.4	5.3	4.4	* 5.5	4.4	* 5.3	4.4	5.5
Max Green Setting (Gmax), s	10.7	35.1	4.0	* 31	11.2	* 35	4.1	30.5
Max Q Clear Time (g_c+I1), s	6.9	19.4	3.1	5.7	6.2	11.3	2.9	6.1
Green Ext Time (p_c), s	0.1	12.8	0.0	1.1	0.2	17.7	0.0	1.1

Intersection Summary	
HCM 2010 Ctrl Delay	19.0
HCM 2010 LOS	B

Notes

* HCM 2010 computational engine requires equal clearance times for the phases crossing the barrier.

Movement	EBL	EBT	EBR	WBL	WBT	WBR	NBL	NBT	NBR	SBL	SBT	SBR
Lane Configurations												
Volume (veh/h)	0	1038	72	365	248	0	0	0	0	326	0	652
Number	5	2	12	1	6	16				7	4	14
Initial Q (Qb), veh	0	0	0	0	0	0				0	0	0
Ped-Bike Adj(A_pbT)	1.00		1.00	1.00		1.00				1.00		1.00
Parking Bus, Adj	1.00	1.00	1.00	1.00	1.00	1.00				1.00	1.00	1.00
Adj Sat Flow, veh/h/ln	0	1863	1863	1863	1863	0				1900	1863	1863
Adj Flow Rate, veh/h	0	1070	74	376	256	0				336	0	0
Adj No. of Lanes	0	2	1	2	2	0				0	1	1
Peak Hour Factor	0.97	0.97	0.97	0.97	0.97	0.97				0.97	0.97	0.97
Percent Heavy Veh, %	0	2	2	2	2	0				2	2	2
Cap, veh/h	0	1813	811	456	2431	0				385	0	344
Arrive On Green	0.00	0.51	0.51	0.04	0.23	0.00				0.22	0.00	0.00
Sat Flow, veh/h	0	3632	1583	3442	3632	0				1774	0	1583
Grp Volume(v), veh/h	0	1070	74	376	256	0				336	0	0
Grp Sat Flow(s),veh/h/ln	0	1770	1583	1721	1770	0				1774	0	1583
Q Serve(g_s), s	0.0	21.1	2.4	10.8	5.7	0.0				18.3	0.0	0.0
Cycle Q Clear(g_c), s	0.0	21.1	2.4	10.8	5.7	0.0				18.3	0.0	0.0
Prop In Lane	0.00		1.00	1.00		0.00				1.00		1.00
Lane Grp Cap(c), veh/h	0	1813	811	456	2431	0				385	0	344
V/C Ratio(X)	0.00	0.59	0.09	0.82	0.11	0.00				0.87	0.00	0.00
Avail Cap(c_a), veh/h	0	1813	811	544	2431	0				539	0	481
HCM Platoon Ratio	1.00	1.00	1.00	0.33	0.33	1.00				1.00	1.00	1.00
Upstream Filter(I)	0.00	1.00	1.00	0.71	0.71	0.00				1.00	0.00	0.00
Uniform Delay (d), s/veh	0.0	17.1	12.5	46.7	14.3	0.0				37.8	0.0	0.0
Incr Delay (d2), s/veh	0.0	1.4	0.2	6.2	0.1	0.0				10.9	0.0	0.0
Initial Q Delay(d3),s/veh	0.0	0.0	0.0	0.0	0.0	0.0				0.0	0.0	0.0
%ile BackOfQ(50%),veh/ln	0.0	10.6	1.1	5.6	2.8	0.0				10.1	0.0	0.0
LnGrp Delay(d),s/veh	0.0	18.5	12.7	52.9	14.4	0.0				48.7	0.0	0.0
LnGrp LOS		B	B	D	B					D		
Approach Vol, veh/h		1144			632						336	
Approach Delay, s/veh		18.1			37.3						48.7	
Approach LOS		B			D						D	

Timer	1	2	3	4	5	6	7	8
Assigned Phs	1	2		4		6		
Phs Duration (G+Y+Rc), s	17.5	56.2		26.3		73.7		
Change Period (Y+Rc), s	* 4.2	5.0		4.6		5.0		
Max Green Setting (Gmax), s	* 16	40.0		30.4		60.0		
Max Q Clear Time (g_c+I1), s	12.8	23.1		20.3		7.7		
Green Ext Time (p_c), s	0.4	9.0		1.4		14.1		

Intersection Summary	
HCM 2010 Ctrl Delay	28.7
HCM 2010 LOS	C

Notes

* HCM 2010 computational engine requires equal clearance times for the phases crossing the barrier.

Movement	EBL	EBT	EBR	WBL	WBT	WBR	NBL	NBT	NBR	SBL	SBT	SBR
Lane Configurations												
Volume (veh/h)	783	581	0	0	510	525	103	3	201	0	0	0
Number	5	2	12	1	6	16	7	4	14			
Initial Q (Qb), veh	0	0	0	0	0	0	0	0	0			
Ped-Bike Adj(A_pbT)	1.00		1.00	1.00		0.98	1.00		1.00			
Parking Bus, Adj	1.00	1.00	1.00	1.00	1.00	1.00	1.00	1.00	1.00			
Adj Sat Flow, veh/h/ln	1863	1863	0	0	1863	1900	1900	1863	1863			
Adj Flow Rate, veh/h	824	612	0	0	537	553	108	3	212			
Adj No. of Lanes	2	2	0	0	2	0	0	1	1			
Peak Hour Factor	0.95	0.95	0.95	0.95	0.95	0.95	0.95	0.95	0.95			
Percent Heavy Veh, %	2	2	0	0	2	2	2	2	2			
Cap, veh/h	909	2743	0	0	830	730	214	6	196			
Arrive On Green	0.44	1.00	0.00	0.00	0.47	0.47	0.12	0.12	0.12			
Sat Flow, veh/h	3442	3632	0	0	1863	1556	1728	48	1583			
Grp Volume(v), veh/h	824	612	0	0	537	553	111	0	212			
Grp Sat Flow(s),veh/h/ln	1721	1770	0	0	1770	1556	1776	0	1583			
Q Serve(g_s), s	22.3	0.0	0.0	0.0	23.1	29.3	5.8	0.0	12.4			
Cycle Q Clear(g_c), s	22.3	0.0	0.0	0.0	23.1	29.3	5.8	0.0	12.4			
Prop In Lane	1.00		0.00	0.00		1.00	0.97		1.00			
Lane Grp Cap(c), veh/h	909	2743	0	0	830	730	220	0	196			
V/C Ratio(X)	0.91	0.22	0.00	0.00	0.65	0.76	0.50	0.00	1.08			
Avail Cap(c_a), veh/h	1094	2743	0	0	830	730	220	0	196			
HCM Platoon Ratio	1.67	1.67	1.00	1.00	1.00	1.00	1.00	1.00	1.00			
Upstream Filter(I)	0.69	0.69	0.00	0.00	0.83	0.83	1.00	0.00	1.00			
Uniform Delay (d), s/veh	26.8	0.0	0.0	0.0	20.2	21.9	40.9	0.0	43.8			
Incr Delay (d2), s/veh	7.0	0.1	0.0	0.0	3.3	6.1	1.8	0.0	87.1			
Initial Q Delay(d3),s/veh	0.0	0.0	0.0	0.0	0.0	0.0	0.0	0.0	0.0			
%ile BackOfQ(50%),veh/ln	11.4	0.0	0.0	0.0	11.9	13.7	3.0	0.0	14.9			
LnGrp Delay(d),s/veh	33.8	0.1	0.0	0.0	23.5	28.0	42.8	0.0	130.9			
LnGrp LOS	C	A			C	C	D		F			
Approach Vol, veh/h		1436			1090			323				
Approach Delay, s/veh		19.4			25.8			100.6				
Approach LOS		B			C			F				

Timer	1	2	3	4	5	6	7	8
Assigned Phs		2		4	5	6		
Phs Duration (G+Y+Rc), s		83.0		17.0	30.6	52.4		
Change Period (Y+Rc), s		5.5		4.6	* 4.2	5.5		
Max Green Setting (Gmax), s		77.5		12.4	* 32	41.5		
Max Q Clear Time (g_c+I1), s		2.0		14.4	24.3	31.3		
Green Ext Time (p_c), s		20.7		0.0	2.1	7.4		

Intersection Summary	
HCM 2010 Ctrl Delay	31.1
HCM 2010 LOS	C

Notes

* HCM 2010 computational engine requires equal clearance times for the phases crossing the barrier.

Movement	EBL	EBT	EBR	WBL	WBT	WBR	NBL	NBT	NBR	SBL	SBT	SBR
Lane Configurations												
Volume (veh/h)	431	59	362	11	24	11	390	196	31	18	137	477
Number	5	2	12	1	6	16	3	8	18	7	4	14
Initial Q (Qb), veh	0	0	0	0	0	0	0	0	0	0	0	0
Ped-Bike Adj(A_pbT)	1.00		1.00	1.00		1.00	1.00		1.00	1.00		1.00
Parking Bus, Adj	1.00	1.00	1.00	1.00	1.00	1.00	1.00	1.00	1.00	1.00	1.00	1.00
Adj Sat Flow, veh/h/ln	1863	1863	1863	1863	1863	1900	1863	1863	1900	1900	1863	1863
Adj Flow Rate, veh/h	463	63	389	12	26	12	440	182	33	19	407	340
Adj No. of Lanes	2	1	1	1	2	0	2	1	0	0	1	1
Peak Hour Factor	0.93	0.93	0.93	0.93	0.93	0.93	0.93	0.93	0.93	0.93	0.93	0.93
Percent Heavy Veh, %	2	2	2	2	2	2	2	2	2	2	2	2
Cap, veh/h	970	525	728	107	146	63	632	273	50	18	385	344
Arrive On Green	0.28	0.28	0.28	0.06	0.06	0.06	0.18	0.18	0.18	0.22	0.22	0.22
Sat Flow, veh/h	3442	1863	1583	1774	2411	1038	3548	1535	278	83	1776	1583
Grp Volume(v), veh/h	463	63	389	12	19	19	440	0	215	426	0	340
Grp Sat Flow(s),veh/h/ln	1721	1863	1583	1774	1770	1679	1774	0	1814	1859	0	1583
Q Serve(g_s), s	8.3	1.9	13.1	0.5	0.7	0.8	8.7	0.0	8.3	16.2	0.0	16.0
Cycle Q Clear(g_c), s	8.3	1.9	13.1	0.5	0.7	0.8	8.7	0.0	8.3	16.2	0.0	16.0
Prop In Lane	1.00		1.00	1.00		0.62	1.00		0.15	0.04		1.00
Lane Grp Cap(c), veh/h	970	525	728	107	107	102	632	0	323	403	0	344
V/C Ratio(X)	0.48	0.12	0.53	0.11	0.17	0.19	0.70	0.00	0.67	1.06	0.00	0.99
Avail Cap(c_a), veh/h	1337	724	897	428	427	405	1293	0	661	403	0	344
HCM Platoon Ratio	1.00	1.00	1.00	1.00	1.00	1.00	1.00	1.00	1.00	1.00	1.00	1.00
Upstream Filter(I)	1.00	1.00	1.00	1.00	1.00	1.00	1.00	0.00	1.00	1.00	0.00	1.00
Uniform Delay (d), s/veh	22.2	19.9	14.4	33.2	33.3	33.3	28.8	0.0	28.6	29.2	0.0	29.1
Incr Delay (d2), s/veh	0.7	0.2	1.2	0.5	0.8	0.9	1.4	0.0	2.4	60.3	0.0	45.5
Initial Q Delay(d3),s/veh	0.0	0.0	0.0	0.0	0.0	0.0	0.0	0.0	0.0	0.0	0.0	0.0
%ile BackOfQ(50%),veh/ln	4.0	1.0	7.8	0.2	0.4	0.4	4.3	0.0	4.3	14.9	0.0	11.2
LnGrp Delay(d),s/veh	23.0	20.1	15.6	33.6	34.0	34.2	30.2	0.0	31.0	89.5	0.0	74.7
LnGrp LOS	C	C	B	C	C	C	C		C	F		E
Approach Vol, veh/h		915			50			655			766	
Approach Delay, s/veh		19.6			34.0			30.4			82.9	
Approach LOS		B			C			C			F	

Timer	1	2	3	4	5	6	7	8
Assigned Phs		2		4		6		8
Phs Duration (G+Y+Rc), s		25.9		21.1		9.4		18.2
Change Period (Y+Rc), s		4.9		4.9		4.9		4.9
Max Green Setting (Gmax), s		29.0		16.2		18.0		27.2
Max Q Clear Time (g_c+I1), s		15.1		18.2		2.8		10.7
Green Ext Time (p_c), s		5.9		0.0		0.1		2.6

Intersection Summary	
HCM 2010 Ctrl Delay	43.2
HCM 2010 LOS	D

Notes

User approved volume balancing among the lanes for turning movement.

Movement	EBL	EBT	EBR	WBL	WBT	WBR	NBL	NBT	NBR	SBL	SBT	SBR
Lane Configurations												
Volume (veh/h)	21	5	25	63	4	13	16	652	17	4	403	39
Number	7	4	14	3	8	18	5	2	12	1	6	16
Initial Q (Qb), veh	0	0	0	0	0	0	0	0	0	0	0	0
Ped-Bike Adj(A_pbT)	1.00		1.00	1.00		1.00	1.00		1.00	1.00		1.00
Parking Bus, Adj	1.00	1.00	1.00	1.00	1.00	1.00	1.00	1.00	1.00	1.00	1.00	1.00
Adj Sat Flow, veh/h/ln	1900	1863	1900	1900	1863	1900	1863	1863	1900	1863	1863	1900
Adj Flow Rate, veh/h	23	5	27	69	4	14	18	716	19	4	443	43
Adj No. of Lanes	0	1	0	0	1	0	1	1	0	1	1	0
Peak Hour Factor	0.91	0.91	0.91	0.91	0.91	0.91	0.91	0.91	0.91	0.91	0.91	0.91
Percent Heavy Veh, %	2	2	2	2	2	2	2	2	2	2	2	2
Cap, veh/h	97	26	65	167	7	20	29	1355	36	8	1234	120
Arrive On Green	0.08	0.08	0.08	0.08	0.08	0.08	0.02	0.75	0.75	0.00	0.74	0.74
Sat Flow, veh/h	522	340	831	1223	89	251	1774	1806	48	1774	1672	162
Grp Volume(v), veh/h	55	0	0	87	0	0	18	0	735	4	0	486
Grp Sat Flow(s),veh/h/ln	1693	0	0	1563	0	0	1774	0	1854	1774	0	1834
Q Serve(g_s), s	0.0	0.0	0.0	2.0	0.0	0.0	0.9	0.0	14.8	0.2	0.0	8.5
Cycle Q Clear(g_c), s	2.7	0.0	0.0	4.7	0.0	0.0	0.9	0.0	14.8	0.2	0.0	8.5
Prop In Lane	0.42		0.49	0.79		0.16	1.00		0.03	1.00		0.09
Lane Grp Cap(c), veh/h	188	0	0	193	0	0	29	0	1391	8	0	1354
V/C Ratio(X)	0.29	0.00	0.00	0.45	0.00	0.00	0.63	0.00	0.53	0.53	0.00	0.36
Avail Cap(c_a), veh/h	761	0	0	729	0	0	79	0	1391	79	0	1354
HCM Platoon Ratio	1.00	1.00	1.00	1.00	1.00	1.00	1.00	1.00	1.00	1.00	1.00	1.00
Upstream Filter(I)	1.00	0.00	0.00	1.00	0.00	0.00	1.00	0.00	1.00	1.00	0.00	1.00
Uniform Delay (d), s/veh	39.5	0.0	0.0	40.3	0.0	0.0	44.0	0.0	4.6	44.7	0.0	4.2
Incr Delay (d2), s/veh	0.3	0.0	0.0	0.6	0.0	0.0	8.2	0.0	1.4	20.1	0.0	0.7
Initial Q Delay(d3),s/veh	0.0	0.0	0.0	0.0	0.0	0.0	0.0	0.0	0.0	0.0	0.0	0.0
%ile BackOfQ(50%),veh/ln	1.3	0.0	0.0	2.1	0.0	0.0	0.5	0.0	7.9	0.1	0.0	4.5
LnGrp Delay(d),s/veh	39.9	0.0	0.0	40.9	0.0	0.0	52.2	0.0	6.1	64.8	0.0	4.9
LnGrp LOS	D			D			D		A	E		A
Approach Vol, veh/h		55			87			753			490	
Approach Delay, s/veh		39.9			40.9			7.2			5.4	
Approach LOS		D			D			A			A	

Timer	1	2	3	4	5	6	7	8
Assigned Phs	1	2		4	5	6		8
Phs Duration (G+Y+Rc), s	4.8	73.3		11.9	5.8	72.3		11.9
Change Period (Y+Rc), s	4.4	* 5.8		4.9	4.4	5.8		4.9
Max Green Setting (Gmax), s	4.6	* 30		41.0	4.0	29.9		41.0
Max Q Clear Time (g_c+I1), s	2.2	16.8		4.7	2.9	10.5		6.7
Green Ext Time (p_c), s	0.0	8.3		0.5	0.0	10.7		0.5

Intersection Summary	
HCM 2010 Ctrl Delay	10.0
HCM 2010 LOS	A

Notes

* HCM 2010 computational engine requires equal clearance times for the phases crossing the barrier.

Movement	NBT	NBR	SBL	SBT	SWL	SWR
Lane Configurations						
Volume (veh/h)	584	702	0	363	493	4
Number	2	12	1	6	3	18
Initial Q (Qb), veh	0	0	0	0	0	0
Ped-Bike Adj(A_pbT)		1.00	1.00		1.00	1.00
Parking Bus, Adj	1.00	1.00	1.00	1.00	1.00	1.00
Adj Sat Flow, veh/h/ln	1863	1900	0	1863	1863	1900
Adj Flow Rate, veh/h	635	763	0	395	540	0
Adj No. of Lanes	2	0	0	2	2	1
Peak Hour Factor	0.92	0.92	0.92	0.92	0.92	0.92
Percent Heavy Veh, %	2	2	0	2	2	0
Cap, veh/h	852	762	0	1704	888	404
Arrive On Green	0.48	0.48	0.00	0.48	0.25	0.00
Sat Flow, veh/h	1863	1583	0	3725	3548	1615
Grp Volume(v), veh/h	635	763	0	395	540	0
Grp Sat Flow(s),veh/h/ln	1770	1583	0	1770	1774	1615
Q Serve(g_s), s	11.6	19.2	0.0	2.6	5.4	0.0
Cycle Q Clear(g_c), s	11.6	19.2	0.0	2.6	5.4	0.0
Prop In Lane		1.00	0.00		1.00	1.00
Lane Grp Cap(c), veh/h	852	762	0	1704	888	404
V/C Ratio(X)	0.75	1.00	0.00	0.23	0.61	0.00
Avail Cap(c_a), veh/h	852	762	0	1704	899	409
HCM Platoon Ratio	1.00	1.00	1.00	1.00	1.00	1.00
Upstream Filter(I)	1.00	1.00	0.00	1.00	1.00	0.00
Uniform Delay (d), s/veh	8.4	10.3	0.0	6.0	13.2	0.0
Incr Delay (d2), s/veh	5.9	32.8	0.0	0.3	1.2	0.0
Initial Q Delay(d3),s/veh	0.0	0.0	0.0	0.0	0.0	0.0
%ile BackOfQ(50%),veh/ln	6.9	15.0	0.0	1.3	2.8	0.0
LnGrp Delay(d),s/veh	14.2	43.1	0.0	6.4	14.4	0.0
LnGrp LOS	B	F		A	B	
Approach Vol, veh/h	1398			395	540	
Approach Delay, s/veh	30.0			6.4	14.4	
Approach LOS	C			A	B	

Timer	1	2	3	4	5	6	7	8
Assigned Phs		2				6		8
Phs Duration (G+Y+Rc), s		25.0				25.0		14.9
Change Period (Y+Rc), s		* 5.8				5.8		4.9
Max Green Setting (Gmax), s		* 19				10.0		10.1
Max Q Clear Time (g_c+I1), s		21.2				4.6		7.4
Green Ext Time (p_c), s		0.0				4.5		0.6

Intersection Summary	
HCM 2010 Ctrl Delay	22.4
HCM 2010 LOS	C

Notes

User approved volume balancing among the lanes for turning movement.

Movement	EBL	EBT	EBR	WBL	WBT	WBR	NBL	NBT	NBR	SBL	SBT	SBR
Lane Configurations												
Volume (veh/h)	24	11	42	4	14	579	130	678	10	472	350	45
Number	7	4	14	3	8	18	5	2	12	1	6	16
Initial Q (Qb), veh	0	0	0	0	0	0	0	0	0	0	0	0
Ped-Bike Adj(A_pbT)	1.00		1.00	1.00		1.00	1.00		1.00	1.00		1.00
Parking Bus, Adj	1.00	1.00	1.00	1.00	1.00	1.00	1.00	1.00	1.00	1.00	1.00	1.00
Adj Sat Flow, veh/h/ln	1863	1863	1900	1900	1863	1863	1863	1863	1900	1863	1863	1900
Adj Flow Rate, veh/h	26	12	46	0	0	643	141	737	11	513	380	49
Adj No. of Lanes	1	1	0	0	1	2	1	3	0	2	2	0
Peak Hour Factor	0.92	0.92	0.92	0.92	0.92	0.92	0.92	0.92	0.92	0.92	0.92	0.92
Percent Heavy Veh, %	2	2	2	2	2	2	2	2	2	2	2	2
Cap, veh/h	219	66	254	0	364	1161	170	2585	39	588	1817	233
Arrive On Green	0.20	0.20	0.20	0.00	0.00	0.20	0.10	0.50	0.50	0.17	0.58	0.58
Sat Flow, veh/h	784	338	1296	0	1863	3167	1774	5162	77	3442	3157	404
Grp Volume(v), veh/h	26	0	58	0	0	643	141	484	264	513	212	217
Grp Sat Flow(s),veh/h/ln	784	0	1634	0	1863	1583	1774	1695	1849	1721	1770	1791
Q Serve(g_s), s	3.0	0.0	3.3	0.0	0.0	17.8	8.6	9.1	9.2	16.0	6.4	6.4
Cycle Q Clear(g_c), s	3.0	0.0	3.3	0.0	0.0	17.8	8.6	9.1	9.2	16.0	6.4	6.4
Prop In Lane	1.00		0.79	0.00		1.00	1.00		0.04	1.00		0.23
Lane Grp Cap(c), veh/h	219	0	320	0	364	1161	170	1698	926	588	1019	1031
V/C Ratio(X)	0.12	0.00	0.18	0.00	0.00	0.55	0.83	0.28	0.29	0.87	0.21	0.21
Avail Cap(c_a), veh/h	315	0	521	0	594	1551	348	1698	926	895	1019	1031
HCM Platoon Ratio	1.00	1.00	1.00	1.00	1.00	1.00	1.00	1.00	1.00	1.00	1.00	1.00
Upstream Filter(I)	1.00	0.00	1.00	0.00	0.00	0.68	1.00	1.00	1.00	1.00	1.00	1.00
Uniform Delay (d), s/veh	36.8	0.0	36.9	0.0	0.0	27.7	48.8	16.0	16.0	44.4	11.3	11.3
Incr Delay (d2), s/veh	0.1	0.0	0.1	0.0	0.0	0.1	3.9	0.4	0.8	4.2	0.5	0.5
Initial Q Delay(d3),s/veh	0.0	0.0	0.0	0.0	0.0	0.0	0.0	0.0	0.0	0.0	0.0	0.0
%ile BackOfQ(50%),veh/ln	0.7	0.0	1.5	0.0	0.0	7.8	4.4	4.3	4.9	8.0	3.2	3.3
LnGrp Delay(d),s/veh	36.9	0.0	37.0	0.0	0.0	27.8	52.7	16.4	16.8	48.6	11.7	11.7
LnGrp LOS	D		D			C	D	B	B	D	B	B
Approach Vol, veh/h		84			643			889			942	
Approach Delay, s/veh		37.0			27.8			22.3			31.8	
Approach LOS		D			C			C			C	

Timer	1	2	3	4	5	6	7	8
Assigned Phs	1	2		4	5	6		8
Phs Duration (G+Y+Rc), s	23.2	60.4		26.4	15.0	68.6		26.4
Change Period (Y+Rc), s	4.4	* 5.3		4.9	4.4	5.3		4.9
Max Green Setting (Gmax), s	28.6	* 32		35.1	21.6	38.7		35.1
Max Q Clear Time (g_c+I1), s	19.0	11.2		5.3	10.6	8.4		19.8
Green Ext Time (p_c), s	0.8	8.2		1.9	0.1	9.5		1.8

Intersection Summary	
HCM 2010 Ctrl Delay	27.7
HCM 2010 LOS	C

Notes

User approved volume balancing among the lanes for turning movement.

Movement	WBL	WBR	NBT	NBR	SBL	SBT
Lane Configurations						
Volume (veh/h)	741	10	853	839	0	384
Number	3	18	2	12	1	6
Initial Q (Qb), veh	0	0	0	0	0	0
Ped-Bike Adj(A_pbT)	1.00	1.00		1.00	1.00	
Parking Bus, Adj	1.00	1.00	1.00	1.00	1.00	1.00
Adj Sat Flow, veh/h/ln	1863	1900	1863	1863	0	1863
Adj Flow Rate, veh/h	843	0	958	0	0	431
Adj No. of Lanes	2	1	2	1	0	2
Peak Hour Factor	0.89	0.89	0.89	0.89	0.89	0.89
Percent Heavy Veh, %	2	0	2	2	0	2
Cap, veh/h	1026	467	1602	717	0	1602
Arrive On Green	0.29	0.00	0.45	0.00	0.00	0.45
Sat Flow, veh/h	3548	1615	3632	1583	0	3725
Grp Volume(v), veh/h	843	0	958	0	0	431
Grp Sat Flow(s),veh/h/ln	1774	1615	1770	1583	0	1770
Q Serve(g_s), s	12.2	0.0	11.2	0.0	0.0	4.2
Cycle Q Clear(g_c), s	12.2	0.0	11.2	0.0	0.0	4.2
Prop In Lane	1.00	1.00		1.00	0.00	
Lane Grp Cap(c), veh/h	1026	467	1602	717	0	1602
V/C Ratio(X)	0.82	0.00	0.60	0.00	0.00	0.27
Avail Cap(c_a), veh/h	1181	537	1602	717	0	1602
HCM Platoon Ratio	1.00	1.00	1.00	1.00	1.00	1.00
Upstream Filter(I)	1.00	0.00	1.00	0.00	0.00	1.00
Uniform Delay (d), s/veh	18.2	0.0	11.3	0.0	0.0	9.4
Incr Delay (d2), s/veh	4.5	0.0	1.7	0.0	0.0	0.4
Initial Q Delay(d3),s/veh	0.0	0.0	0.0	0.0	0.0	0.0
%ile BackOfQ(50%),veh/ln	6.5	0.0	5.8	0.0	0.0	2.1
LnGrp Delay(d),s/veh	22.7	0.0	13.0	0.0	0.0	9.8
LnGrp LOS	C		B			A
Approach Vol, veh/h	843		958			431
Approach Delay, s/veh	22.7		13.0			9.8
Approach LOS	C		B			A

Timer	1	2	3	4	5	6	7	8
Assigned Phs		2				6		8
Phs Duration (G+Y+Rc), s		30.4				30.4		24.6
Change Period (Y+Rc), s		5.5				* 5.5		8.7
Max Green Setting (Gmax), s		22.5				* 23		18.3
Max Q Clear Time (g_c+I1), s		13.2				6.2		14.2
Green Ext Time (p_c), s		7.0				11.0		1.7

Intersection Summary	
HCM 2010 Ctrl Delay	16.0
HCM 2010 LOS	B

Notes

User approved volume balancing among the lanes for turning movement.

Movement	EBL	EBT	EBR	WBL	WBT	WBR	NBL	NBT	NBR	SBL	SBT	SBR
Lane Configurations												
Volume (veh/h)	382	140	26	232	272	159	27	694	139	62	487	303
Number	7	4	14	3	8	18	5	2	12	1	6	16
Initial Q (Qb), veh	0	0	0	0	0	0	0	0	0	0	0	0
Ped-Bike Adj(A_pbT)	1.00		1.00	1.00		1.00	1.00		1.00	1.00		1.00
Parking Bus, Adj	1.00	1.00	1.00	1.00	1.00	1.00	1.00	1.00	1.00	1.00	1.00	1.00
Adj Sat Flow, veh/h/ln	1863	1863	1900	1863	1863	1863	1863	1863	1900	1863	1863	1900
Adj Flow Rate, veh/h	326	347	31	200	430	189	32	826	165	74	580	361
Adj No. of Lanes	1	1	0	1	2	1	1	2	0	1	2	0
Peak Hour Factor	0.84	0.84	0.84	0.84	0.84	0.84	0.84	0.84	0.84	0.84	0.84	0.84
Percent Heavy Veh, %	2	2	2	2	2	2	2	2	2	2	2	2
Cap, veh/h	412	391	35	268	562	239	40	1134	227	94	873	543
Arrive On Green	0.23	0.23	0.23	0.15	0.15	0.15	0.02	0.39	0.39	0.05	0.42	0.42
Sat Flow, veh/h	1774	1686	151	1774	3725	1583	1774	2941	588	1774	2097	1305
Grp Volume(v), veh/h	326	0	378	200	430	189	32	497	494	74	489	452
Grp Sat Flow(s),veh/h/ln	1774	0	1836	1774	1863	1583	1774	1770	1759	1774	1770	1632
Q Serve(g_s), s	19.0	0.0	21.9	11.9	12.2	12.7	2.0	26.4	26.4	4.5	24.6	24.6
Cycle Q Clear(g_c), s	19.0	0.0	21.9	11.9	12.2	12.7	2.0	26.4	26.4	4.5	24.6	24.6
Prop In Lane	1.00		0.08	1.00		1.00	1.00		0.33	1.00		0.80
Lane Grp Cap(c), veh/h	412	0	426	268	562	239	40	682	678	94	737	679
V/C Ratio(X)	0.79	0.00	0.89	0.75	0.77	0.79	0.80	0.73	0.73	0.78	0.66	0.66
Avail Cap(c_a), veh/h	469	0	486	389	816	347	68	682	678	115	737	679
HCM Platoon Ratio	1.00	1.00	1.00	1.00	1.00	1.00	1.00	1.00	1.00	1.00	1.00	1.00
Upstream Filter(I)	0.62	0.00	0.62	1.00	1.00	1.00	1.00	1.00	1.00	1.00	1.00	1.00
Uniform Delay (d), s/veh	39.7	0.0	40.8	44.7	44.8	45.0	53.5	28.9	28.9	51.4	25.9	25.9
Incr Delay (d2), s/veh	5.1	0.0	11.0	2.1	1.3	4.4	12.3	6.7	6.7	20.0	4.7	5.1
Initial Q Delay(d3),s/veh	0.0	0.0	0.0	0.0	0.0	0.0	0.0	0.0	0.0	0.0	0.0	0.0
%ile BackOfQ(50%),veh/ln	9.9	0.0	12.4	6.0	6.4	5.8	1.1	14.1	14.0	2.7	12.9	12.0
LnGrp Delay(d),s/veh	44.8	0.0	51.9	46.8	46.2	49.5	65.8	35.6	35.6	71.4	30.6	31.0
LnGrp LOS	D		D	D	D	D	E	D	D	E	C	C
Approach Vol, veh/h		704			819			1023			1015	
Approach Delay, s/veh		48.6			47.1			36.5			33.8	
Approach LOS		D			D			D			C	

Timer	1	2	3	4	5	6	7	8
Assigned Phs	1	2		4	5	6		8
Phs Duration (G+Y+Rc), s	10.3	47.8		30.4	6.9	51.2		21.5
Change Period (Y+Rc), s	4.4	* 5.4		4.9	4.4	5.4		4.9
Max Green Setting (Gmax), s	7.1	* 31		29.1	4.2	33.0		24.1
Max Q Clear Time (g_c+I1), s	16.5	28.4		23.9	4.0	26.6		14.7
Green Ext Time (p_c), s	0.0	1.7		1.6	0.0	4.4		1.9

Intersection Summary	
HCM 2010 Ctrl Delay	40.6
HCM 2010 LOS	D

Notes

User approved volume balancing among the lanes for turning movement.

Movement	EBL	EBT	EBR	WBL	WBT	WBR	NBL	NBT	NBR	SBL	SBT	SBR
Lane Configurations												
Volume (veh/h)	487	705	30	5	730	58	95	19	4	11	0	49
Number	5	2	12	1	6	16	3	8	18	7	4	14
Initial Q (Qb), veh	0	0	0	0	0	0	0	0	0	0	0	0
Ped-Bike Adj(A_pbT)	1.00		1.00	1.00		1.00	1.00		1.00	1.00		1.00
Parking Bus, Adj	1.00	1.00	1.00	1.00	1.00	1.00	1.00	1.00	1.00	1.00	1.00	1.00
Adj Sat Flow, veh/h/ln	1863	1863	1900	1863	1863	1900	1900	1863	1900	1900	1863	1863
Adj Flow Rate, veh/h	580	839	36	6	869	69	113	23	5	13	0	58
Adj No. of Lanes	1	2	0	1	2	0	0	1	0	0	1	1
Peak Hour Factor	0.84	0.84	0.84	0.84	0.84	0.84	0.84	0.84	0.84	0.84	0.84	0.84
Percent Heavy Veh, %	2	2	2	2	2	2	2	2	2	2	2	2
Cap, veh/h	574	2531	109	11	1376	109	194	30	6	253	0	713
Arrive On Green	0.32	0.73	0.73	0.01	0.41	0.41	0.13	0.13	0.13	0.13	0.00	0.13
Sat Flow, veh/h	1774	3458	148	1774	3322	264	1063	234	48	1479	0	1583
Grp Volume(v), veh/h	580	429	446	6	463	475	141	0	0	13	0	58
Grp Sat Flow(s),veh/h/ln	1774	1770	1837	1774	1770	1816	1345	0	0	1479	0	1583
Q Serve(g_s), s	35.6	9.4	9.5	0.4	22.8	22.8	10.6	0.0	0.0	0.0	0.0	2.3
Cycle Q Clear(g_c), s	35.6	9.4	9.5	0.4	22.8	22.8	11.4	0.0	0.0	0.8	0.0	2.3
Prop In Lane	1.00		0.08	1.00		0.15	0.80		0.04	1.00		1.00
Lane Grp Cap(c), veh/h	574	1295	1344	11	733	752	229	0	0	253	0	713
V/C Ratio(X)	1.01	0.33	0.33	0.56	0.63	0.63	0.62	0.00	0.00	0.05	0.00	0.08
Avail Cap(c_a), veh/h	574	1295	1344	65	733	752	423	0	0	441	0	930
HCM Platoon Ratio	1.00	1.00	1.00	1.00	1.00	1.00	1.00	1.00	1.00	1.00	1.00	1.00
Upstream Filter(I)	1.00	1.00	1.00	1.00	1.00	1.00	1.00	0.00	0.00	1.00	0.00	1.00
Uniform Delay (d), s/veh	37.2	5.2	5.2	54.5	25.6	25.6	47.2	0.0	0.0	42.3	0.0	17.3
Incr Delay (d2), s/veh	40.1	0.7	0.7	15.5	4.1	4.0	1.0	0.0	0.0	0.0	0.0	0.0
Initial Q Delay(d3),s/veh	0.0	0.0	0.0	0.0	0.0	0.0	0.0	0.0	0.0	0.0	0.0	0.0
%ile BackOfQ(50%),veh/ln	23.8	4.8	5.0	0.2	11.9	12.2	4.3	0.0	0.0	0.3	0.0	1.0
LnGrp Delay(d),s/veh	77.3	5.9	5.9	70.0	29.7	29.6	48.2	0.0	0.0	42.4	0.0	17.3
LnGrp LOS	F	A	A	E	C	C	D			D		B
Approach Vol, veh/h		1455			944			141			71	
Approach Delay, s/veh		34.4			29.9			48.2			21.9	
Approach LOS		C			C			D			C	

Timer	1	2	3	4	5	6	7	8
Assigned Phs	1	2		4	5	6		8
Phs Duration (G+Y+Rc), s	5.1	86.1		18.8	40.0	51.2		18.8
Change Period (Y+Rc), s	4.4	* 5.6		4.9	4.4	5.6		4.9
Max Green Setting (Gmax), s	4.6	* 63		29.0	35.6	30.5		29.0
Max Q Clear Time (g_c+I1), s	2.4	11.5		4.3	37.6	24.8		13.4
Green Ext Time (p_c), s	0.0	41.0		0.6	0.0	5.4		0.6

Intersection Summary	
HCM 2010 Ctrl Delay	33.2
HCM 2010 LOS	C

Notes

* HCM 2010 computational engine requires equal clearance times for the phases crossing the barrier.

Intersection	
Int Delay, s/veh	2.1

Movement	EBT	EBR	WBL	WBT	NBL	NBR
Vol, veh/h	606	16	31	655	48	46
Conflicting Peds, #/hr	0	18	0	0	0	0
Sign Control	Free	Free	Free	Free	Stop	Stop
RT Channelized	-	None	-	None	-	None
Storage Length	-	-	100	-	0	-
Veh in Median Storage, #	0	-	-	0	0	-
Grade, %	0	-	-	0	0	-
Peak Hour Factor	84	84	84	84	84	84
Heavy Vehicles, %	2	2	2	2	2	2
Mvmt Flow	721	19	37	780	57	55

Major/Minor	Major1		Major2		Minor1	
Conflicting Flow All	0	0	740	0	1195	370
Stage 1	-	-	-	-	731	-
Stage 2	-	-	-	-	464	-
Critical Hdwy	-	-	4.14	-	6.84	6.94
Critical Hdwy Stg 1	-	-	-	-	5.84	-
Critical Hdwy Stg 2	-	-	-	-	5.84	-
Follow-up Hdwy	-	-	2.22	-	3.52	3.32
Pot Cap-1 Maneuver	-	-	862	-	179	627
Stage 1	-	-	-	-	437	-
Stage 2	-	-	-	-	599	-
Platoon blocked, %	-	-		-		
Mov Cap-1 Maneuver	-	-	862	-	169	627
Mov Cap-2 Maneuver	-	-	-	-	169	-
Stage 1	-	-	-	-	437	-
Stage 2	-	-	-	-	565	-

Approach	EB	WB	NB
HCM Control Delay, s	0	0.4	28.5
HCM LOS			D

Minor Lane/Major Mvmt	NBLn1	EBT	EBR	WBL	WBT
Capacity (veh/h)	263	-	-	862	-
HCM Lane V/C Ratio	0.425	-	-	0.043	-
HCM Control Delay (s)	28.5	-	-	9.4	-
HCM Lane LOS	D	-	-	A	-
HCM 95th %tile Q(veh)	2	-	-	0.1	-

Movement	EBL	EBT	EBR	WBL	WBT	WBR	NBL	NBT	NBR	SBL	SBT	SBR
Lane Configurations												
Volume (veh/h)	243	497	44	24	690	242	167	14	102	23	5	37
Number	5	2	12	1	6	16	3	8	18	7	4	14
Initial Q (Qb), veh	0	0	0	0	0	0	0	0	0	0	0	0
Ped-Bike Adj(A_pbT)	1.00		0.97	1.00		0.98	1.00		0.98	1.00		0.88
Parking Bus, Adj	1.00	1.00	1.00	1.00	1.00	1.00	1.00	1.00	1.00	1.00	1.00	1.00
Adj Sat Flow, veh/h/ln	1863	1863	1900	1863	1863	1863	1863	1863	1900	1863	1863	1863
Adj Flow Rate, veh/h	286	585	52	28	812	285	196	16	120	31	0	44
Adj No. of Lanes	1	2	0	1	2	1	1	1	0	2	0	1
Peak Hour Factor	0.85	0.85	0.85	0.85	0.85	0.85	0.85	0.85	0.85	0.85	0.85	0.85
Percent Heavy Veh, %	2	2	2	2	2	2	2	2	2	2	2	2
Cap, veh/h	284	1796	159	339	1230	837	229	24	181	663	0	260
Arrive On Green	0.05	0.18	0.18	0.11	0.11	0.11	0.13	0.13	0.13	0.19	0.00	0.19
Sat Flow, veh/h	1774	3280	291	787	3539	1557	1774	187	1402	3548	0	1393
Grp Volume(v), veh/h	286	315	322	28	812	285	196	0	136	31	0	44
Grp Sat Flow(s),veh/h/ln	1774	1770	1802	787	1770	1557	1774	0	1589	1774	0	1393
Q Serve(g_s), s	17.6	17.0	17.1	3.5	24.2	13.5	11.9	0.0	9.0	0.8	0.0	2.9
Cycle Q Clear(g_c), s	17.6	17.0	17.1	3.5	24.2	13.5	11.9	0.0	9.0	0.8	0.0	2.9
Prop In Lane	1.00		0.16	1.00		1.00	1.00		0.88	1.00		1.00
Lane Grp Cap(c), veh/h	284	969	986	339	1230	837	229	0	205	663	0	260
V/C Ratio(X)	1.01	0.33	0.33	0.08	0.66	0.34	0.86	0.00	0.66	0.05	0.00	0.17
Avail Cap(c_a), veh/h	284	969	986	339	1230	837	258	0	231	871	0	342
HCM Platoon Ratio	0.33	0.33	0.33	0.33	0.33	0.33	1.00	1.00	1.00	1.00	1.00	1.00
Upstream Filter(I)	1.00	1.00	1.00	1.00	1.00	1.00	1.00	0.00	1.00	1.00	0.00	1.00
Uniform Delay (d), s/veh	52.1	27.4	27.4	33.3	42.5	20.4	46.9	0.0	45.6	36.7	0.0	37.5
Incr Delay (d2), s/veh	55.4	0.9	0.9	0.1	1.4	0.3	21.7	0.0	5.9	0.0	0.0	0.1
Initial Q Delay(d3),s/veh	0.0	0.0	0.0	0.0	0.0	0.0	0.0	0.0	0.0	0.0	0.0	0.0
%ile BackOfQ(50%),veh/ln	13.0	8.6	8.8	0.8	12.1	8.3	7.2	0.0	4.3	0.4	0.0	1.1
LnGrp Delay(d),s/veh	107.5	28.3	28.3	33.4	43.9	20.7	68.6	0.0	51.5	36.7	0.0	37.7
LnGrp LOS	F	C	C	C	D	C	E		D	D		D
Approach Vol, veh/h		923			1125			332			75	
Approach Delay, s/veh		52.8			37.7			61.6			37.3	
Approach LOS		D			D			E			D	

Timer	1	2	3	4	5	6	7	8
Assigned Phs		2		4	5	6		8
Phs Duration (G+Y+Rc), s		66.3		25.5	22.0	44.3		18.2
Change Period (Y+Rc), s		* 6.1		4.9	4.4	6.1		4.0
Max Green Setting (Gmax), s		* 53		27.0	17.6	30.0		16.0
Max Q Clear Time (g_c+I1), s		19.1		4.9	19.6	26.2		13.9
Green Ext Time (p_c), s		17.0		0.1	0.0	3.2		0.3

Intersection Summary	
HCM 2010 Ctrl Delay	46.6
HCM 2010 LOS	D

Notes

User approved volume balancing among the lanes for turning movement.

Intersection	
Int Delay, s/veh	0.9

Movement	EBL	EBT	WBT	WBR	SBL	SBR
Vol, veh/h	39	505	900	18	9	36
Conflicting Peds, #/hr	0	0	0	3	0	0
Sign Control	Free	Free	Free	Free	Stop	Stop
RT Channelized	-	None	-	None	-	None
Storage Length	140	-	-	-	0	-
Veh in Median Storage, #	-	0	0	-	0	-
Grade, %	-	0	0	-	0	-
Peak Hour Factor	87	87	87	87	87	87
Heavy Vehicles, %	2	2	2	2	2	2
Mvmt Flow	45	580	1034	21	10	41

Major/Minor	Major1		Major2		Minor2	
Conflicting Flow All	1055	0	-	0	1425	528
Stage 1	-	-	-	-	1045	-
Stage 2	-	-	-	-	380	-
Critical Hdwy	4.14	-	-	-	6.84	6.94
Critical Hdwy Stg 1	-	-	-	-	5.84	-
Critical Hdwy Stg 2	-	-	-	-	5.84	-
Follow-up Hdwy	2.22	-	-	-	3.52	3.32
Pot Cap-1 Maneuver	656	-	-	-	126	495
Stage 1	-	-	-	-	300	-
Stage 2	-	-	-	-	661	-
Platoon blocked, %		-	-	-		
Mov Cap-1 Maneuver	656	-	-	-	117	495
Mov Cap-2 Maneuver	-	-	-	-	117	-
Stage 1	-	-	-	-	300	-
Stage 2	-	-	-	-	616	-

Approach	EB	WB	SB
HCM Control Delay, s	0.8	0	19.4
HCM LOS			C

Minor Lane/Major Mvmt	EBL	EBT	WBT	WBR	SBLn1
Capacity (veh/h)	656	-	-	-	301
HCM Lane V/C Ratio	0.068	-	-	-	0.172
HCM Control Delay (s)	10.9	-	-	-	19.4
HCM Lane LOS	B	-	-	-	C
HCM 95th %tile Q(veh)	0.2	-	-	-	0.6

Movement	EBL	EBT	EBR	WBL	WBT	WBR	NBL	NBT	NBR	SBL	SBT	SBR
Lane Configurations												
Volume (veh/h)	12	491	49	120	691	18	166	16	292	36	43	61
Number	5	2	12	1	6	16	3	8	18	7	4	14
Initial Q (Qb), veh	0	0	0	0	0	0	0	0	0	0	0	0
Ped-Bike Adj(A_pbT)	1.00		0.98	1.00		0.97	1.00		0.97	1.00		1.00
Parking Bus, Adj	1.00	1.00	1.00	1.00	1.00	1.00	1.00	1.00	1.00	1.00	1.00	1.00
Adj Sat Flow, veh/h/ln	1863	1863	1863	1863	1863	1900	1863	1863	1863	1863	1863	1863
Adj Flow Rate, veh/h	15	606	60	148	853	22	205	20	360	44	53	75
Adj No. of Lanes	1	2	1	1	2	0	1	1	1	1	1	1
Peak Hour Factor	0.81	0.81	0.81	0.81	0.81	0.81	0.81	0.81	0.81	0.81	0.81	0.81
Percent Heavy Veh, %	2	2	2	2	2	2	2	2	2	2	2	2
Cap, veh/h	24	1569	689	176	1865	48	234	442	523	56	256	217
Arrive On Green	0.03	0.89	0.89	0.10	0.53	0.53	0.13	0.24	0.24	0.03	0.14	0.14
Sat Flow, veh/h	1774	3539	1553	1774	3523	91	1774	1863	1542	1774	1863	1583
Grp Volume(v), veh/h	15	606	60	148	428	447	205	20	360	44	53	75
Grp Sat Flow(s),veh/h/ln	1774	1770	1553	1774	1770	1844	1774	1863	1542	1774	1863	1583
Q Serve(g_s), s	0.9	3.2	0.5	9.0	16.5	16.5	12.5	0.9	22.2	2.7	2.8	4.7
Cycle Q Clear(g_c), s	0.9	3.2	0.5	9.0	16.5	16.5	12.5	0.9	22.2	2.7	2.8	4.7
Prop In Lane	1.00		1.00	1.00		0.05	1.00		1.00	1.00		1.00
Lane Grp Cap(c), veh/h	24	1569	689	176	937	976	234	442	523	56	256	217
V/C Ratio(X)	0.63	0.39	0.09	0.84	0.46	0.46	0.88	0.05	0.69	0.78	0.21	0.35
Avail Cap(c_a), veh/h	65	1569	689	219	937	976	252	586	642	108	440	374
HCM Platoon Ratio	2.00	2.00	2.00	1.00	1.00	1.00	1.00	1.00	1.00	1.00	1.00	1.00
Upstream Filter(I)	1.00	1.00	1.00	1.00	1.00	1.00	1.00	1.00	1.00	1.00	1.00	1.00
Uniform Delay (d), s/veh	53.3	3.6	3.5	48.7	16.1	16.1	46.9	32.3	31.6	52.9	42.1	43.0
Incr Delay (d2), s/veh	9.9	0.7	0.2	17.2	1.6	1.5	25.0	0.0	1.4	8.5	0.1	0.4
Initial Q Delay(d3),s/veh	0.0	0.0	0.0	0.0	0.0	0.0	0.0	0.0	0.0	0.0	0.0	0.0
%ile BackOfQ(50%),veh/ln	0.5	1.7	0.3	5.3	8.5	8.9	7.7	0.5	9.6	1.5	1.4	2.1
LnGrp Delay(d),s/veh	63.1	4.4	3.7	65.9	17.7	17.6	71.9	32.4	33.0	61.4	42.3	43.3
LnGrp LOS	E	A	A	E	B	B	E	C	C	E	D	D
Approach Vol, veh/h		681			1023			585			172	
Approach Delay, s/veh		5.6			24.6			46.6			47.6	
Approach LOS		A			C			D			D	

Timer	1	2	3	4	5	6	7	8
Assigned Phs	1	2	3	4	5	6	7	8
Phs Duration (G+Y+Rc), s	15.3	55.5	18.9	20.3	5.9	64.9	7.9	31.3
Change Period (Y+Rc), s	4.4	* 6.7	4.4	* 5.2	4.4	6.7	4.4	5.2
Max Green Setting (Gmax), s	13.6	* 35	15.6	* 26	4.0	44.0	6.7	34.6
Max Q Clear Time (g_c+I1), s	11.0	5.2	14.5	6.7	2.9	18.5	4.7	24.2
Green Ext Time (p_c), s	0.0	8.3	0.0	1.0	0.0	7.9	0.0	0.9

Intersection Summary	
HCM 2010 Ctrl Delay	26.2
HCM 2010 LOS	C

Notes

* HCM 2010 computational engine requires equal clearance times for the phases crossing the barrier.

Movement	EBL	EBT	EBR	WBL	WBT	WBR	NBL	NBT	NBR	SBL	SBT	SBR
Lane Configurations												
Volume (veh/h)	17	34	45	62	15	43	8	485	50	51	593	9
Number	7	4	14	3	8	18	5	2	12	1	6	16
Initial Q (Qb), veh	0	0	0	0	0	0	0	0	0	0	0	0
Ped-Bike Adj(A_pbT)	0.99		0.94	0.95		0.98	1.00		0.96	1.00		0.97
Parking Bus, Adj	1.00	1.00	1.00	1.00	1.00	1.00	1.00	1.00	1.00	1.00	1.00	1.00
Adj Sat Flow, veh/h/ln	1900	1863	1900	1900	1863	1900	1863	1863	1900	1863	1863	1900
Adj Flow Rate, veh/h	20	41	54	75	18	52	10	584	60	61	714	11
Adj No. of Lanes	0	1	0	0	1	0	1	2	0	1	2	0
Peak Hour Factor	0.83	0.83	0.83	0.83	0.83	0.83	0.83	0.83	0.83	0.83	0.83	0.83
Percent Heavy Veh, %	2	2	2	2	2	2	2	2	2	2	2	2
Cap, veh/h	78	140	151	198	56	108	17	1907	195	78	2228	34
Arrive On Green	0.20	0.20	0.20	0.20	0.20	0.20	0.01	0.59	0.59	0.09	1.00	1.00
Sat Flow, veh/h	154	697	753	684	279	539	1774	3228	331	1774	3565	55
Grp Volume(v), veh/h	115	0	0	145	0	0	10	320	324	61	354	371
Grp Sat Flow(s),veh/h/ln	1603	0	0	1502	0	0	1774	1770	1789	1774	1770	1851
Q Serve(g_s), s	0.0	0.0	0.0	1.4	0.0	0.0	0.5	8.1	8.2	3.0	0.0	0.0
Cycle Q Clear(g_c), s	5.3	0.0	0.0	6.8	0.0	0.0	0.5	8.1	8.2	3.0	0.0	0.0
Prop In Lane	0.17		0.47	0.52		0.36	1.00		0.18	1.00		0.03
Lane Grp Cap(c), veh/h	369	0	0	362	0	0	17	1045	1057	78	1106	1157
V/C Ratio(X)	0.31	0.00	0.00	0.40	0.00	0.00	0.57	0.31	0.31	0.78	0.32	0.32
Avail Cap(c_a), veh/h	595	0	0	564	0	0	110	1045	1057	189	1106	1157
HCM Platoon Ratio	1.00	1.00	1.00	1.00	1.00	1.00	1.00	1.00	1.00	2.00	2.00	2.00
Upstream Filter(I)	1.00	0.00	0.00	1.00	0.00	0.00	1.00	1.00	1.00	0.96	0.96	0.96
Uniform Delay (d), s/veh	30.9	0.0	0.0	31.4	0.0	0.0	44.4	9.2	9.2	40.6	0.0	0.0
Incr Delay (d2), s/veh	0.2	0.0	0.0	0.3	0.0	0.0	10.5	0.8	0.8	6.1	0.7	0.7
Initial Q Delay(d3),s/veh	0.0	0.0	0.0	0.0	0.0	0.0	0.0	0.0	0.0	0.0	0.0	0.0
%ile BackOfQ(50%),veh/ln	2.5	0.0	0.0	3.2	0.0	0.0	0.3	4.1	4.2	1.6	0.2	0.2
LnGrp Delay(d),s/veh	31.1	0.0	0.0	31.6	0.0	0.0	54.9	10.0	10.0	46.7	0.7	0.7
LnGrp LOS	C			C			D	A	A	D	A	A
Approach Vol, veh/h		115			145			654			786	
Approach Delay, s/veh		31.1			31.6			10.6			4.3	
Approach LOS		C			C			B			A	

Timer	1	2	3	4	5	6	7	8
Assigned Phs	1	2		4	5	6		8
Phs Duration (G+Y+Rc), s	8.4	58.7		23.0	5.3	61.7		23.0
Change Period (Y+Rc), s	4.4	* 5.5		4.9	4.4	5.5		4.9
Max Green Setting (Gmax), s	9.6	* 35		31.1	5.6	38.5		31.1
Max Q Clear Time (g_c+I1), s	5.0	10.2		7.3	2.5	2.0		8.8
Green Ext Time (p_c), s	0.0	14.5		1.1	0.0	18.1		1.0

Intersection Summary	
HCM 2010 Ctrl Delay	10.9
HCM 2010 LOS	B

Notes

* HCM 2010 computational engine requires equal clearance times for the phases crossing the barrier.

Movement	EBL	EBT	EBR	WBL	WBT	WBR	NBL	NBT	NBR	SBL	SBT	SBR
Lane Configurations												
Volume (veh/h)	93	90	93	36	53	32	68	461	29	69	537	36
Number	7	4	14	3	8	18	5	2	12	1	6	16
Initial Q (Qb), veh	0	0	0	0	0	0	0	0	0	0	0	0
Ped-Bike Adj(A_pbT)	0.99		0.97	0.99		0.97	1.00		0.95	1.00		0.95
Parking Bus, Adj	1.00	1.00	1.00	1.00	1.00	1.00	1.00	1.00	1.00	1.00	1.00	1.00
Adj Sat Flow, veh/h/ln	1863	1863	1900	1863	1863	1900	1863	1863	1900	1863	1863	1900
Adj Flow Rate, veh/h	104	101	104	40	60	36	76	518	33	78	603	40
Adj No. of Lanes	1	1	0	1	1	0	1	2	0	1	2	0
Peak Hour Factor	0.89	0.89	0.89	0.89	0.89	0.89	0.89	0.89	0.89	0.89	0.89	0.89
Percent Heavy Veh, %	2	2	2	2	2	2	2	2	2	2	2	2
Cap, veh/h	319	192	198	226	251	150	98	1853	118	99	1849	122
Arrive On Green	0.23	0.23	0.23	0.23	0.23	0.23	0.02	0.18	0.18	0.11	1.00	1.00
Sat Flow, veh/h	1276	826	851	1158	1077	646	1774	3369	214	1774	3357	222
Grp Volume(v), veh/h	104	0	205	40	0	96	76	271	280	78	317	326
Grp Sat Flow(s),veh/h/ln	1276	0	1677	1158	0	1723	1774	1770	1813	1774	1770	1810
Q Serve(g_s), s	6.5	0.0	9.6	2.8	0.0	4.1	3.8	11.9	12.0	3.9	0.0	0.0
Cycle Q Clear(g_c), s	10.6	0.0	9.6	12.4	0.0	4.1	3.8	11.9	12.0	3.9	0.0	0.0
Prop In Lane	1.00		0.51	1.00		0.38	1.00		0.12	1.00		0.12
Lane Grp Cap(c), veh/h	319	0	391	226	0	401	98	973	997	99	974	997
V/C Ratio(X)	0.33	0.00	0.52	0.18	0.00	0.24	0.77	0.28	0.28	0.78	0.33	0.33
Avail Cap(c_a), veh/h	491	0	617	382	0	634	209	973	997	209	974	997
HCM Platoon Ratio	1.00	1.00	1.00	1.00	1.00	1.00	0.33	0.33	0.33	2.00	2.00	2.00
Upstream Filter(I)	1.00	0.00	1.00	1.00	0.00	1.00	0.97	0.97	0.97	0.97	0.97	0.97
Uniform Delay (d), s/veh	32.3	0.0	30.2	35.6	0.0	28.0	43.6	21.4	21.5	39.4	0.0	0.0
Incr Delay (d2), s/veh	0.2	0.0	0.4	0.1	0.0	0.1	4.6	0.7	0.7	4.9	0.9	0.8
Initial Q Delay(d3),s/veh	0.0	0.0	0.0	0.0	0.0	0.0	0.0	0.0	0.0	0.0	0.0	0.0
%ile BackOfQ(50%),veh/ln	2.3	0.0	4.5	0.9	0.0	2.0	2.0	6.0	6.2	2.0	0.2	0.2
LnGrp Delay(d),s/veh	32.6	0.0	30.6	35.7	0.0	28.2	48.2	22.1	22.1	44.3	0.9	0.8
LnGrp LOS	C		C	D		C	D	C	C	D	A	A
Approach Vol, veh/h		309			136			627			721	
Approach Delay, s/veh		31.2			30.4			25.3			5.6	
Approach LOS		C			C			C			A	

Timer	1	2	3	4	5	6	7	8
Assigned Phs	1	2		4	5	6		8
Phs Duration (G+Y+Rc), s	9.4	54.7		25.9	9.4	54.8		25.9
Change Period (Y+Rc), s	4.4	5.2		4.9	4.4	* 5.2		4.9
Max Green Setting (Gmax), s	10.6	31.8		33.1	10.6	* 32		33.1
Max Q Clear Time (g_c+I1), s	5.9	14.0		12.6	5.8	2.0		14.4
Green Ext Time (p_c), s	0.0	7.8		1.4	0.0	9.7		1.4

Intersection Summary	
HCM 2010 Ctrl Delay	18.8
HCM 2010 LOS	B

Notes

* HCM 2010 computational engine requires equal clearance times for the phases crossing the barrier.

Movement	EBL	EBT	EBR	WBL	WBT	WBR	NBL	NBT	NBR	SBL	SBT	SBR
Lane Configurations												
Volume (veh/h)	116	93	47	44	110	231	51	553	40	146	543	34
Number	7	4	14	3	8	18	5	2	12	1	6	16
Initial Q (Qb), veh	0	0	0	0	0	0	0	0	0	0	0	0
Ped-Bike Adj(A_pbT)	0.96		0.97	0.99		0.92	1.00		0.97	1.00		0.97
Parking Bus, Adj	1.00	1.00	1.00	1.00	1.00	1.00	1.00	1.00	1.00	1.00	1.00	1.00
Adj Sat Flow, veh/h/ln	1863	1863	1900	1863	1863	1863	1863	1863	1900	1863	1863	1900
Adj Flow Rate, veh/h	127	102	52	48	121	254	56	608	44	160	597	37
Adj No. of Lanes	1	1	0	1	1	1	1	2	0	1	2	0
Peak Hour Factor	0.91	0.91	0.91	0.91	0.91	0.91	0.91	0.91	0.91	0.91	0.91	0.91
Percent Heavy Veh, %	2	2	2	2	2	2	2	2	2	2	2	2
Cap, veh/h	294	314	160	326	508	396	71	1535	111	195	1789	111
Arrive On Green	0.27	0.27	0.27	0.27	0.27	0.27	0.08	0.92	0.92	0.11	0.53	0.53
Sat Flow, veh/h	965	1153	588	1217	1863	1454	1774	3339	241	1774	3379	209
Grp Volume(v), veh/h	127	0	154	48	121	254	56	322	330	160	312	322
Grp Sat Flow(s),veh/h/ln	965	0	1741	1217	1863	1454	1774	1770	1810	1774	1770	1819
Q Serve(g_s), s	10.6	0.0	6.4	2.9	4.5	13.9	2.8	2.1	2.1	7.9	9.1	9.1
Cycle Q Clear(g_c), s	15.2	0.0	6.4	9.3	4.5	13.9	2.8	2.1	2.1	7.9	9.1	9.1
Prop In Lane	1.00		0.34	1.00		1.00	1.00		0.13	1.00		0.11
Lane Grp Cap(c), veh/h	294	0	475	326	508	396	71	814	832	195	937	963
V/C Ratio(X)	0.43	0.00	0.32	0.15	0.24	0.64	0.79	0.40	0.40	0.82	0.33	0.33
Avail Cap(c_a), veh/h	354	0	582	401	623	486	150	814	832	347	937	963
HCM Platoon Ratio	1.00	1.00	1.00	1.00	1.00	1.00	2.00	2.00	2.00	1.00	1.00	1.00
Upstream Filter(I)	1.00	0.00	1.00	1.00	1.00	1.00	0.96	0.96	0.96	0.56	0.56	0.56
Uniform Delay (d), s/veh	31.4	0.0	26.1	29.8	25.5	28.9	41.0	2.0	2.0	39.2	12.1	12.1
Incr Delay (d2), s/veh	0.4	0.0	0.1	0.1	0.1	1.0	6.7	1.4	1.4	1.9	0.5	0.5
Initial Q Delay(d3),s/veh	0.0	0.0	0.0	0.0	0.0	0.0	0.0	0.0	0.0	0.0	0.0	0.0
%ile BackOfQ(50%),veh/ln	2.9	0.0	3.1	1.0	2.3	5.6	1.5	1.2	1.2	4.0	4.6	4.7
LnGrp Delay(d),s/veh	31.7	0.0	26.3	29.9	25.6	29.8	47.7	3.4	3.4	41.1	12.6	12.6
LnGrp LOS	C		C	C	C	C	D	A	A	D	B	B
Approach Vol, veh/h		281			423			708			794	
Approach Delay, s/veh		28.7			28.6			6.9			18.4	
Approach LOS		C			C			A			B	

Timer	1	2	3	4	5	6	7	8
Assigned Phs	1	2		4	5	6		8
Phs Duration (G+Y+Rc), s	14.3	46.3		29.4	8.0	52.6		29.4
Change Period (Y+Rc), s	4.4	4.9		4.9	4.4	4.9		4.9
Max Green Setting (Gmax), s	17.6	28.1		30.1	7.6	38.1		30.1
Max Q Clear Time (g_c+I1), s	19.9	4.1		17.2	4.8	11.1		15.9
Green Ext Time (p_c), s	0.1	17.7		1.8	0.0	19.3		1.9

Intersection Summary	
HCM 2010 Ctrl Delay	18.0
HCM 2010 LOS	B

Movement	EBL	EBT	EBR	WBL	WBT	WBR	NBL	NBT	NBR	SBL	SBT	SBR
Lane Configurations												
Volume (veh/h)	130	438	216	377	484	192	241	581	379	101	476	103
Number	5	2	12	1	6	16	3	8	18	7	4	14
Initial Q (Qb), veh	0	0	0	0	0	0	0	0	0	0	0	0
Ped-Bike Adj(A_pbT)	1.00		0.97	1.00		0.98	1.00		0.96	1.00		0.88
Parking Bus, Adj	1.00	1.00	1.00	1.00	1.00	1.00	1.00	1.00	1.00	1.00	1.00	1.00
Adj Sat Flow, veh/h/ln	1863	1863	1863	1863	1863	1863	1863	1863	1863	1863	1863	1900
Adj Flow Rate, veh/h	141	476	235	410	526	209	262	632	412	110	517	112
Adj No. of Lanes	1	2	1	2	2	1	1	2	1	2	2	0
Peak Hour Factor	0.92	0.92	0.92	0.92	0.92	0.92	0.92	0.92	0.92	0.92	0.92	0.92
Percent Heavy Veh, %	2	2	2	2	2	2	2	2	2	2	2	2
Cap, veh/h	166	969	422	433	1083	476	287	1408	607	161	798	171
Arrive On Green	0.09	0.27	0.27	0.13	0.31	0.31	0.16	0.40	0.40	0.05	0.28	0.28
Sat Flow, veh/h	1774	3539	1541	3442	3539	1554	1774	3539	1526	3442	2820	606
Grp Volume(v), veh/h	141	476	235	410	526	209	262	632	412	110	323	306
Grp Sat Flow(s),veh/h/ln	1774	1770	1541	1721	1770	1554	1774	1770	1526	1721	1770	1656
Q Serve(g_s), s	9.7	14.0	16.2	14.7	15.0	13.4	18.0	16.2	27.6	3.9	19.8	20.2
Cycle Q Clear(g_c), s	9.7	14.0	16.2	14.7	15.0	13.4	18.0	16.2	27.6	3.9	19.8	20.2
Prop In Lane	1.00		1.00	1.00		1.00	1.00		1.00	1.00		0.37
Lane Grp Cap(c), veh/h	166	969	422	433	1083	476	287	1408	607	161	501	469
V/C Ratio(X)	0.85	0.49	0.56	0.95	0.49	0.44	0.91	0.45	0.68	0.68	0.64	0.65
Avail Cap(c_a), veh/h	166	969	422	433	1083	476	295	1408	607	230	501	469
HCM Platoon Ratio	1.00	1.00	1.00	1.00	1.00	1.00	1.00	1.00	1.00	1.00	1.00	1.00
Upstream Filter(I)	1.00	1.00	1.00	1.00	1.00	1.00	0.90	0.90	0.90	1.00	1.00	1.00
Uniform Delay (d), s/veh	55.3	37.8	38.6	53.8	35.1	34.5	51.1	27.4	30.8	58.2	39.0	39.1
Incr Delay (d2), s/veh	30.5	1.8	5.2	29.8	1.6	2.9	27.9	0.9	5.5	1.9	6.3	6.9
Initial Q Delay(d3),s/veh	0.0	0.0	0.0	0.0	0.0	0.0	0.0	0.0	0.0	0.0	0.0	0.0
%ile BackOfQ(50%),veh/ln	6.2	7.0	7.5	8.7	7.5	6.1	11.0	8.1	12.6	1.9	10.6	10.1
LnGrp Delay(d),s/veh	85.9	39.5	43.8	83.6	36.6	37.4	79.0	28.3	36.2	60.1	45.2	46.0
LnGrp LOS	F	D	D	F	D	D	E	C	D	E	D	D
Approach Vol, veh/h		852			1145			1306			739	
Approach Delay, s/veh		48.4			53.6			41.0			47.8	
Approach LOS		D			D			D			D	

Timer	1	2	3	4	5	6	7	8
Assigned Phs	1	2	3	4	5	6	7	8
Phs Duration (G+Y+Rc), s	20.0	39.3	24.4	40.3	16.0	43.3	10.2	54.5
Change Period (Y+Rc), s	4.4	5.3	4.4	5.2	4.4	5.3	4.4	* 5.2
Max Green Setting (Gmax), s	15.6	33.4	20.6	35.1	11.6	37.4	8.3	* 48
Max Q Clear Time (g_c+I1), s	16.7	18.2	20.0	22.2	11.7	17.0	5.9	29.6
Green Ext Time (p_c), s	0.0	10.2	0.0	10.5	0.0	12.6	0.0	13.9

Intersection Summary	
HCM 2010 Ctrl Delay	47.4
HCM 2010 LOS	D

Notes

* HCM 2010 computational engine requires equal clearance times for the phases crossing the barrier.

Movement	WBL	WBR	NBT	NBR	SBL	SBT
Lane Configurations						
Volume (veh/h)	245	157	1268	391	154	644
Number	3	18	2	12	1	6
Initial Q (Qb), veh	0	0	0	0	0	0
Ped-Bike Adj(A_pbT)	1.00	1.00		0.98	1.00	
Parking Bus, Adj	1.00	1.00	1.00	1.00	1.00	1.00
Adj Sat Flow, veh/h/ln	1863	1863	1863	1863	1863	1863
Adj Flow Rate, veh/h	293	147	1393	430	169	708
Adj No. of Lanes	2	1	2	1	2	2
Peak Hour Factor	0.91	0.91	0.91	0.91	0.91	0.91
Percent Heavy Veh, %	2	2	2	2	2	2
Cap, veh/h	444	198	2061	1099	262	2531
Arrive On Green	0.13	0.13	0.58	0.58	0.08	0.72
Sat Flow, veh/h	3548	1583	3632	1546	3442	3632
Grp Volume(v), veh/h	293	147	1393	430	169	708
Grp Sat Flow(s),veh/h/ln	1774	1583	1770	1546	1721	1770
Q Serve(g_s), s	6.1	7.0	21.0	8.7	3.7	5.5
Cycle Q Clear(g_c), s	6.1	7.0	21.0	8.7	3.7	5.5
Prop In Lane	1.00	1.00		1.00	1.00	
Lane Grp Cap(c), veh/h	444	198	2061	1099	262	2531
V/C Ratio(X)	0.66	0.74	0.68	0.39	0.65	0.28
Avail Cap(c_a), veh/h	1234	551	2061	1099	709	3027
HCM Platoon Ratio	1.00	1.00	1.00	1.00	1.00	1.00
Upstream Filter(I)	1.00	1.00	1.00	1.00	1.00	1.00
Uniform Delay (d), s/veh	32.4	32.8	11.2	4.6	34.8	3.9
Incr Delay (d2), s/veh	0.6	2.1	1.0	0.3	1.0	0.1
Initial Q Delay(d3),s/veh	0.0	0.0	0.0	0.0	0.0	0.0
%ile BackOfQ(50%),veh/ln	3.1	3.1	10.3	5.4	1.8	2.7
LnGrp Delay(d),s/veh	33.0	34.8	12.2	4.9	35.8	4.1
LnGrp LOS	C	C	B	A	D	A
Approach Vol, veh/h	440		1823			877
Approach Delay, s/veh	33.6		10.5			10.2
Approach LOS	C		B			B

Timer	1	2	3	4	5	6	7	8
Assigned Phs	1	2				6		8
Phs Duration (G+Y+Rc), s	10.3	51.4				61.7		15.9
Change Period (Y+Rc), s	4.4	6.2				* 6.2		6.2
Max Green Setting (Gmax), s	15.6	45.2				* 66		27.0
Max Q Clear Time (g_c+I1), s	5.7	23.0				7.5		9.0
Green Ext Time (p_c), s	0.2	20.3				48.0		0.8

Intersection Summary	
HCM 2010 Ctrl Delay	13.6
HCM 2010 LOS	B

Notes

User approved volume balancing among the lanes for turning movement.

Movement	EBL	EBT	WBT	WBR	SBL	SBR
Lane Configurations						
Volume (veh/h)	294	353	299	347	192	36
Number	5	2	6	16	7	14
Initial Q (Qb), veh	0	0	0	0	0	0
Ped-Bike Adj(A_pbT)	1.00			1.00	1.00	1.00
Parking Bus, Adj	1.00	1.00	1.00	1.00	1.00	1.00
Adj Sat Flow, veh/h/ln	1863	1863	1863	1863	1863	1863
Adj Flow Rate, veh/h	377	453	383	445	246	46
Adj No. of Lanes	1	2	2	1	2	1
Peak Hour Factor	0.78	0.78	0.78	0.78	0.78	0.78
Percent Heavy Veh, %	2	2	2	2	2	2
Cap, veh/h	435	2477	1353	796	427	190
Arrive On Green	0.24	0.70	0.38	0.38	0.12	0.12
Sat Flow, veh/h	1774	3632	3632	1583	3548	1583
Grp Volume(v), veh/h	377	453	383	445	246	46
Grp Sat Flow(s),veh/h/ln	1774	1770	1770	1583	1774	1583
Q Serve(g_s), s	12.3	2.7	4.5	11.8	4.0	1.6
Cycle Q Clear(g_c), s	12.3	2.7	4.5	11.8	4.0	1.6
Prop In Lane	1.00			1.00	1.00	1.00
Lane Grp Cap(c), veh/h	435	2477	1353	796	427	190
V/C Ratio(X)	0.87	0.18	0.28	0.56	0.58	0.24
Avail Cap(c_a), veh/h	896	3738	1717	959	884	395
HCM Platoon Ratio	1.00	1.00	1.00	1.00	1.00	1.00
Upstream Filter(I)	1.00	1.00	1.00	1.00	1.00	1.00
Uniform Delay (d), s/veh	21.9	3.1	13.0	10.4	25.2	24.2
Incr Delay (d2), s/veh	2.1	0.1	0.2	0.9	2.6	1.4
Initial Q Delay(d3),s/veh	0.0	0.0	0.0	0.0	0.0	0.0
%ile BackOfQ(50%),veh/ln	6.2	1.3	2.2	6.5	2.1	1.5
LnGrp Delay(d),s/veh	24.0	3.2	13.1	11.4	27.8	25.5
LnGrp LOS	C	A	B	B	C	C
Approach Vol, veh/h		830	828		292	
Approach Delay, s/veh		12.7	12.2		27.5	
Approach LOS		B	B		C	

Timer	1	2	3	4	5	6	7	8
Assigned Phs		2		4	5	6		
Phs Duration (G+Y+Rc), s		48.4		12.2	19.2	29.2		
Change Period (Y+Rc), s		6.0		4.9	4.4	* 6		
Max Green Setting (Gmax), s		64.0		15.1	30.6	* 29		
Max Q Clear Time (g_c+I1), s		4.7		6.0	14.3	13.8		
Green Ext Time (p_c), s		17.5		1.4	0.5	9.4		

Intersection Summary	
HCM 2010 Ctrl Delay	14.7
HCM 2010 LOS	B

Notes

User approved volume balancing among the lanes for turning movement.

Movement	EBL	EBT	EBR	WBL	WBT	WBR	NBL	NBT	NBR	SBL	SBT	SBR
Lane Configurations												
Volume (veh/h)	53	413	5	8	702	65	40	3	48	62	4	41
Number	5	2	12	1	6	16	3	8	18	7	4	14
Initial Q (Qb), veh	0	0	0	0	0	0	0	0	0	0	0	0
Ped-Bike Adj(A_pbT)	1.00		1.00	1.00		1.00	1.00		1.00	1.00		1.00
Parking Bus, Adj	1.00	1.00	1.00	1.00	1.00	1.00	1.00	1.00	1.00	1.00	1.00	1.00
Adj Sat Flow, veh/h/ln	1863	1863	1900	1863	1863	1900	1900	1863	1863	1863	1863	1900
Adj Flow Rate, veh/h	62	486	6	9	826	76	47	4	56	73	5	48
Adj No. of Lanes	1	2	0	1	2	0	0	1	1	1	1	0
Peak Hour Factor	0.85	0.85	0.85	0.85	0.85	0.85	0.85	0.85	0.85	0.85	0.85	0.85
Percent Heavy Veh, %	2	2	2	2	2	2	2	2	2	2	2	2
Cap, veh/h	79	2201	27	16	1899	175	255	18	235	227	23	216
Arrive On Green	0.04	0.61	0.61	0.01	0.58	0.58	0.15	0.15	0.15	0.15	0.15	0.15
Sat Flow, veh/h	1774	3580	44	1774	3278	302	1022	119	1583	1337	152	1455
Grp Volume(v), veh/h	62	240	252	9	446	456	51	0	56	73	0	53
Grp Sat Flow(s),veh/h/ln	1774	1770	1855	1774	1770	1810	1140	0	1583	1337	0	1606
Q Serve(g_s), s	2.3	4.1	4.1	0.3	9.5	9.5	2.0	0.0	2.1	3.5	0.0	2.0
Cycle Q Clear(g_c), s	2.3	4.1	4.1	0.3	9.5	9.5	4.0	0.0	2.1	7.5	0.0	2.0
Prop In Lane	1.00		0.02	1.00		0.17	0.92		1.00	1.00		0.91
Lane Grp Cap(c), veh/h	79	1088	1140	16	1025	1049	272	0	235	227	0	239
V/C Ratio(X)	0.79	0.22	0.22	0.55	0.43	0.43	0.19	0.00	0.24	0.32	0.00	0.22
Avail Cap(c_a), veh/h	306	1481	1552	148	1315	1345	745	0	779	686	0	790
HCM Platoon Ratio	1.00	1.00	1.00	1.00	1.00	1.00	1.00	1.00	1.00	1.00	1.00	1.00
Upstream Filter(I)	1.00	1.00	1.00	1.00	1.00	1.00	1.00	0.00	1.00	1.00	0.00	1.00
Uniform Delay (d), s/veh	31.8	5.8	5.8	33.2	8.0	8.0	26.7	0.0	25.3	29.5	0.0	25.2
Incr Delay (d2), s/veh	6.3	0.4	0.4	10.3	1.3	1.3	0.1	0.0	0.2	0.3	0.0	0.2
Initial Q Delay(d3),s/veh	0.0	0.0	0.0	0.0	0.0	0.0	0.0	0.0	0.0	0.0	0.0	0.0
%ile BackOfQ(50%),veh/ln	1.3	2.1	2.1	0.2	5.0	5.1	0.9	0.0	0.9	1.3	0.0	0.9
LnGrp Delay(d),s/veh	38.2	6.2	6.2	43.5	9.3	9.3	26.8	0.0	25.5	29.8	0.0	25.4
LnGrp LOS	D	A	A	D	A	A	C		C	C		C
Approach Vol, veh/h		554			911			107			126	
Approach Delay, s/veh		9.7			9.6			26.1			27.9	
Approach LOS		A			A			C			C	

Timer	1	2	3	4	5	6	7	8
Assigned Phs	1	2		4	5	6		8
Phs Duration (G+Y+Rc), s	5.0	47.4		14.9	7.4	45.0		14.9
Change Period (Y+Rc), s	4.4	* 6		4.9	4.4	6.0		4.9
Max Green Setting (Gmax), s	5.6	* 56		33.1	11.6	50.0		33.1
Max Q Clear Time (g_c+I1), s	2.3	6.1		9.5	4.3	11.5		6.0
Green Ext Time (p_c), s	0.0	33.1		0.6	0.0	27.4		0.6

Intersection Summary	
HCM 2010 Ctrl Delay	12.1
HCM 2010 LOS	B

Notes

* HCM 2010 computational engine requires equal clearance times for the phases crossing the barrier.

Movement	EBL	EBT	WBT	WBR	SBL	SBR
Lane Configurations						
Volume (veh/h)	184	387	669	404	197	112
Number	5	2	6	16	7	14
Initial Q (Qb), veh	0	0	0	0	0	0
Ped-Bike Adj(A_pbT)	1.00			0.97	1.00	1.00
Parking Bus, Adj	1.00	1.00	1.00	1.00	1.00	1.00
Adj Sat Flow, veh/h/ln	1863	1863	1863	1863	1863	1863
Adj Flow Rate, veh/h	209	440	760	459	224	127
Adj No. of Lanes	1	2	2	1	1	1
Peak Hour Factor	0.88	0.88	0.88	0.88	0.88	0.88
Percent Heavy Veh, %	2	2	2	2	2	2
Cap, veh/h	274	2261	1424	620	312	278
Arrive On Green	0.15	0.64	0.40	0.40	0.18	0.18
Sat Flow, veh/h	1774	3632	3632	1540	1774	1583
Grp Volume(v), veh/h	209	440	760	459	224	127
Grp Sat Flow(s),veh/h/ln	1774	1770	1770	1540	1774	1583
Q Serve(g_s), s	6.0	2.7	8.7	13.6	6.4	3.8
Cycle Q Clear(g_c), s	6.0	2.7	8.7	13.6	6.4	3.8
Prop In Lane	1.00			1.00	1.00	1.00
Lane Grp Cap(c), veh/h	274	2261	1424	620	312	278
V/C Ratio(X)	0.76	0.19	0.53	0.74	0.72	0.46
Avail Cap(c_a), veh/h	651	3723	2120	922	1132	1011
HCM Platoon Ratio	1.00	1.00	1.00	1.00	1.00	1.00
Upstream Filter(I)	1.00	1.00	1.00	1.00	1.00	1.00
Uniform Delay (d), s/veh	21.7	4.0	12.1	13.6	20.8	19.7
Incr Delay (d2), s/veh	1.7	0.0	0.1	0.7	3.1	1.2
Initial Q Delay(d3),s/veh	0.0	0.0	0.0	0.0	0.0	0.0
%ile BackOfQ(50%),veh/ln	3.1	1.3	4.2	10.9	3.4	3.5
LnGrp Delay(d),s/veh	23.3	4.0	12.3	14.3	23.9	20.9
LnGrp LOS	C	A	B	B	C	C
Approach Vol, veh/h		649	1219		351	
Approach Delay, s/veh		10.2	13.0		22.8	
Approach LOS		B	B		C	

Timer	1	2	3	4	5	6	7	8
Assigned Phs		2		4	5	6		
Phs Duration (G+Y+Rc), s		40.0		13.4	12.6	27.4		
Change Period (Y+Rc), s		* 5.9		4.0	4.4	5.9		
Max Green Setting (Gmax), s		* 56		34.1	19.6	32.0		
Max Q Clear Time (g_c+I1), s		4.7		8.4	8.0	15.6		
Green Ext Time (p_c), s		7.2		1.1	0.2	5.8		

Intersection Summary	
HCM 2010 Ctrl Delay	13.7
HCM 2010 LOS	B

Notes

* HCM 2010 computational engine requires equal clearance times for the phases crossing the barrier.

Movement	EBL	EBT	EBR	WBL	WBT	WBR	NBL	NBT	NBR	SBL	SBT	SBR
Lane Configurations												
Volume (veh/h)	0	628	101	155	1053	2	165	2	74	20	1	7
Number	5	2	12	1	6	16	3	8	18	7	4	14
Initial Q (Qb), veh	0	0	0	0	0	0	0	0	0	0	0	0
Ped-Bike Adj(A_pbT)	1.00		0.99	1.00		0.97	1.00		0.98	1.00		1.00
Parking Bus, Adj	1.00	1.00	1.00	1.00	1.00	1.00	1.00	1.00	1.00	1.00	1.00	1.00
Adj Sat Flow, veh/h/ln	1863	1863	1900	1863	1863	1900	1900	1863	1863	1900	1863	1900
Adj Flow Rate, veh/h	0	661	106	163	1108	2	174	2	78	21	1	7
Adj No. of Lanes	1	3	0	2	2	0	0	1	1	0	1	0
Peak Hour Factor	0.95	0.95	0.95	0.95	0.95	0.95	0.95	0.95	0.95	0.95	0.95	0.95
Percent Heavy Veh, %	2	2	2	2	2	2	2	2	2	2	2	2
Cap, veh/h	2	2762	437	223	2643	5	300	3	373	107	12	20
Arrive On Green	0.00	0.62	0.62	0.13	1.00	1.00	0.17	0.17	0.17	0.17	0.17	0.17
Sat Flow, veh/h	1774	4419	700	3442	3624	7	1352	16	1550	294	67	115
Grp Volume(v), veh/h	0	505	262	163	541	569	176	0	78	29	0	0
Grp Sat Flow(s),veh/h/ln	1774	1695	1729	1721	1770	1861	1367	0	1550	476	0	0
Q Serve(g_s), s	0.0	7.4	7.5	5.1	0.0	0.0	0.0	0.0	4.5	1.3	0.0	0.0
Cycle Q Clear(g_c), s	0.0	7.4	7.5	5.1	0.0	0.0	13.8	0.0	4.5	15.1	0.0	0.0
Prop In Lane	1.00		0.40	1.00		0.00	0.99		1.00	0.72		0.24
Lane Grp Cap(c), veh/h	2	2119	1080	223	1290	1357	302	0	373	138	0	0
V/C Ratio(X)	0.00	0.24	0.24	0.73	0.42	0.42	0.58	0.00	0.21	0.21	0.00	0.00
Avail Cap(c_a), veh/h	63	2119	1080	664	1290	1357	535	0	630	367	0	0
HCM Platoon Ratio	1.00	1.00	1.00	2.00	2.00	2.00	1.00	1.00	1.00	1.00	1.00	1.00
Upstream Filter(I)	0.00	0.96	0.96	0.91	0.91	0.91	1.00	0.00	1.00	1.00	0.00	0.00
Uniform Delay (d), s/veh	0.0	9.3	9.3	47.8	0.0	0.0	43.9	0.0	34.1	45.1	0.0	0.0
Incr Delay (d2), s/veh	0.0	0.3	0.5	1.6	0.9	0.9	1.0	0.0	0.1	0.4	0.0	0.0
Initial Q Delay(d3),s/veh	0.0	0.0	0.0	0.0	0.0	0.0	0.0	0.0	0.0	0.0	0.0	0.0
%ile BackOfQ(50%),veh/ln	0.0	3.5	3.7	2.4	0.3	0.3	5.3	0.0	1.9	0.9	0.0	0.0
LnGrp Delay(d),s/veh	0.0	9.5	9.8	49.4	0.9	0.9	44.8	0.0	34.3	45.5	0.0	0.0
LnGrp LOS		A	A	D	A	A	D		C	D		
Approach Vol, veh/h		767			1273			254			29	
Approach Delay, s/veh		9.6			7.1			41.6			45.5	
Approach LOS		A			A			D			D	

Timer	1	2	3	4	5	6	7	8
Assigned Phs	1	2		4	5	6		8
Phs Duration (G+Y+Rc), s	11.7	75.9		24.4	0.0	87.6		24.4
Change Period (Y+Rc), s	4.4	5.9		4.9	4.4	* 5.9		4.9
Max Green Setting (Gmax), s	21.6	37.1		38.1	4.0	* 55		38.1
Max Q Clear Time (g_c+I1), s	7.1	9.5		17.1	0.0	2.0		15.8
Green Ext Time (p_c), s	0.2	15.7		0.9	0.0	21.3		1.0

Intersection Summary	
HCM 2010 Ctrl Delay	12.2
HCM 2010 LOS	B

Notes

* HCM 2010 computational engine requires equal clearance times for the phases crossing the barrier.

Movement	EBL	EBT	EBR	WBL	WBT	WBR	NBL	NBT	NBR	SBL	SBT	SBR
Lane Configurations												
Volume (veh/h)	8	714	8	40	1081	0	4	0	15	0	0	0
Number	5	2	12	1	6	16	3	8	18			
Initial Q (Qb), veh	0	0	0	0	0	0	0	0	0			
Ped-Bike Adj(A_pbT)	1.00		1.00	1.00		1.00	1.00		1.00			
Parking Bus, Adj	1.00	1.00	1.00	1.00	1.00	1.00	1.00	1.00	1.00			
Adj Sat Flow, veh/h/ln	1863	1863	1900	1863	1863	0	1863	0	1863			
Adj Flow Rate, veh/h	9	860	10	48	1302	0	5	0	18			
Adj No. of Lanes	1	3	0	2	2	0	1	0	1			
Peak Hour Factor	0.92	0.83	0.83	0.83	0.83	0.92	0.83	0.92	0.83			
Percent Heavy Veh, %	2	2	2	2	2	0	2	0	2			
Cap, veh/h	15	4287	50	95	3008	0	32	0	29			
Arrive On Green	0.00	0.27	0.27	0.03	0.85	0.00	0.02	0.00	0.02			
Sat Flow, veh/h	1774	5182	60	3442	3632	0	1774	0	1583			
Grp Volume(v), veh/h	9	562	308	48	1302	0	5	0	18			
Grp Sat Flow(s),veh/h/ln	1774	1695	1852	1721	1770	0	1774	0	1583			
Q Serve(g_s), s	0.6	14.3	14.3	1.5	9.8	0.0	0.3	0.0	1.3			
Cycle Q Clear(g_c), s	0.6	14.3	14.3	1.5	9.8	0.0	0.3	0.0	1.3			
Prop In Lane	1.00		0.03	1.00		0.00	1.00		1.00			
Lane Grp Cap(c), veh/h	15	2805	1532	95	3008	0	32	0	29			
V/C Ratio(X)	0.58	0.20	0.20	0.50	0.43	0.00	0.15	0.00	0.62			
Avail Cap(c_a), veh/h	63	2805	1532	141	3008	0	491	0	438			
HCM Platoon Ratio	0.33	0.33	0.33	1.00	1.00	1.00	1.00	1.00	1.00			
Upstream Filter(I)	0.98	0.98	0.98	1.00	1.00	0.00	1.00	0.00	1.00			
Uniform Delay (d), s/veh	55.6	12.2	12.2	53.7	2.0	0.0	54.1	0.0	54.6			
Incr Delay (d2), s/veh	29.5	0.2	0.3	1.5	0.5	0.0	0.8	0.0	7.9			
Initial Q Delay(d3),s/veh	0.0	0.0	0.0	0.0	0.0	0.0	0.0	0.0	0.0			
%ile BackOfQ(50%),veh/ln	0.4	6.8	7.5	0.8	4.9	0.0	0.2	0.0	0.6			
LnGrp Delay(d),s/veh	85.1	12.4	12.5	55.2	2.5	0.0	54.9	0.0	62.5			
LnGrp LOS	F	B	B	E	A		D		E			
Approach Vol, veh/h		879			1350			23				
Approach Delay, s/veh		13.2			4.3			60.8				
Approach LOS		B			A			E				

Timer	1	2	3	4	5	6	7	8
Assigned Phs	1	2			5	6		8
Phs Duration (G+Y+Rc), s	7.5	98.1			5.0	100.6		6.4
Change Period (Y+Rc), s	4.4	5.4			4.0	* 5.4		4.4
Max Green Setting (Gmax), s	4.6	62.2			4.0	* 63		31.0
Max Q Clear Time (g_c+I1), s	3.5	16.3			2.6	11.8		3.3
Green Ext Time (p_c), s	0.0	28.8			0.0	30.9		0.0

Intersection Summary	
HCM 2010 Ctrl Delay	8.4
HCM 2010 LOS	A

Notes

* HCM 2010 computational engine requires equal clearance times for the phases crossing the barrier.

Movement	EBL	EBT	EBR	WBL	WBT	WBR	NBL	NBT	NBR	SBL	SBT	SBR
Lane Configurations												
Volume (veh/h)	2	667	8	197	1109	2	3	0	19	28	0	1
Number	5	2	12	1	6	16	3	8	18	7	4	14
Initial Q (Qb), veh	0	0	0	0	0	0	0	0	0	0	0	0
Ped-Bike Adj(A_pbT)	1.00		1.00	1.00		1.00	0.98		1.00	1.00		0.98
Parking Bus, Adj	1.00	1.00	1.00	1.00	1.00	1.00	1.00	1.00	1.00	1.00	1.00	1.00
Adj Sat Flow, veh/h/ln	1863	1863	1900	1863	1863	1900	1863	1863	1863	1863	1863	1900
Adj Flow Rate, veh/h	2	695	8	205	1155	2	3	0	20	29	0	1
Adj No. of Lanes	1	3	0	2	3	0	1	0	2	1	1	0
Peak Hour Factor	0.96	0.96	0.96	0.96	0.96	0.96	0.96	0.96	0.96	0.96	0.96	0.96
Percent Heavy Veh, %	2	2	2	2	2	2	2	2	2	2	2	2
Cap, veh/h	4	3876	45	270	4321	7	122	0	134	123	0	66
Arrive On Green	0.00	0.75	0.75	0.08	0.82	0.82	0.04	0.00	0.04	0.04	0.00	0.04
Sat Flow, veh/h	1774	5183	60	3442	5242	9	1381	0	3167	1386	0	1550
Grp Volume(v), veh/h	2	454	249	205	747	410	3	0	20	29	0	1
Grp Sat Flow(s),veh/h/ln	1774	1695	1852	1721	1695	1861	1381	0	1583	1386	0	1550
Q Serve(g_s), s	0.1	4.4	4.4	6.5	5.6	5.6	0.2	0.0	0.7	2.3	0.0	0.1
Cycle Q Clear(g_c), s	0.1	4.4	4.4	6.5	5.6	5.6	0.3	0.0	0.7	2.3	0.0	0.1
Prop In Lane	1.00		0.03	1.00		0.00	1.00		1.00	1.00		1.00
Lane Grp Cap(c), veh/h	4	2535	1385	270	2794	1534	122	0	134	123	0	66
V/C Ratio(X)	0.52	0.18	0.18	0.76	0.27	0.27	0.02	0.00	0.15	0.24	0.00	0.02
Avail Cap(c_a), veh/h	184	2535	1385	633	2794	1534	447	0	879	449	0	430
HCM Platoon Ratio	1.00	1.00	1.00	1.00	1.00	1.00	1.00	1.00	1.00	1.00	1.00	1.00
Upstream Filter(I)	1.00	1.00	1.00	0.79	0.79	0.79	1.00	0.00	1.00	1.00	0.00	1.00
Uniform Delay (d), s/veh	55.8	4.1	4.1	50.6	2.2	2.2	51.5	0.0	51.7	52.4	0.0	51.4
Incr Delay (d2), s/veh	35.6	0.2	0.3	1.3	0.2	0.3	0.0	0.0	0.2	0.4	0.0	0.0
Initial Q Delay(d3),s/veh	0.0	0.0	0.0	0.0	0.0	0.0	0.0	0.0	0.0	0.0	0.0	0.0
%ile BackOfQ(50%),veh/ln	0.1	2.1	2.3	3.2	2.6	2.9	0.1	0.0	0.3	0.9	0.0	0.0
LnGrp Delay(d),s/veh	91.4	4.3	4.4	51.9	2.4	2.6	51.6	0.0	51.9	52.8	0.0	51.4
LnGrp LOS	F	A	A	D	A	A	D		D	D		D
Approach Vol, veh/h		705			1362			23			30	
Approach Delay, s/veh		4.6			9.9			51.8			52.8	
Approach LOS		A			A			D			D	

Timer	1	2	3	4	5	6	7	8
Assigned Phs	1	2		4	5	6		8
Phs Duration (G+Y+Rc), s	13.2	89.2		9.7	4.6	97.7		9.7
Change Period (Y+Rc), s	4.4	5.4		4.9	4.4	* 5.4		4.9
Max Green Setting (Gmax), s	20.6	45.6		31.1	11.6	* 55		31.1
Max Q Clear Time (g_c+I1), s	8.5	6.4		4.3	2.1	7.6		2.7
Green Ext Time (p_c), s	0.3	20.5		0.1	0.0	22.3		0.1

Intersection Summary	
HCM 2010 Ctrl Delay	9.2
HCM 2010 LOS	A

Notes

User approved volume balancing among the lanes for turning movement.

Movement	EBL	EBT	EBR	WBL	WBT	WBR	NBL	NBT	NBR	SBL	SBT	SBR
Lane Configurations												
Volume (veh/h)	36	480	287	0	919	454	285	48	746	299	5	103
Number	5	2	12	1	6	16	3	8	18	7	4	14
Initial Q (Qb), veh	0	0	0	0	0	0	0	0	0	0	0	0
Ped-Bike Adj(A_pbT)	1.00		1.00	1.00		1.00	1.00		1.00	1.00		0.98
Parking Bus, Adj	1.00	1.00	1.00	1.00	1.00	1.00	1.00	1.00	1.00	1.00	1.00	1.00
Adj Sat Flow, veh/h/ln	1863	1863	1863	0	1863	1863	1863	1863	1863	1863	1900	1863
Adj Flow Rate, veh/h	40	527	0	0	1010	499	351	0	0	329	5	113
Adj No. of Lanes	1	3	1	0	3	1	2	0	1	2	0	1
Peak Hour Factor	0.91	0.91	0.91	0.91	0.91	0.91	0.91	0.91	0.91	0.91	0.91	0.91
Percent Heavy Veh, %	2	2	2	0	2	2	2	2	2	2	2	2
Cap, veh/h	150	2028	631	0	1446	450	418	0	186	408	0	184
Arrive On Green	0.08	0.40	0.00	0.00	0.28	0.28	0.12	0.00	0.00	0.12	0.12	0.12
Sat Flow, veh/h	1774	5085	1583	0	5253	1583	3548	0	1583	3442	0	1552
Grp Volume(v), veh/h	40	527	0	0	1010	499	351	0	0	329	0	113
Grp Sat Flow(s),veh/h/ln	1774	1695	1583	0	1695	1583	1774	0	1583	1721	0	1552
Q Serve(g_s), s	3.0	9.7	0.0	0.0	24.8	39.8	13.6	0.0	0.0	13.0	0.0	9.7
Cycle Q Clear(g_c), s	3.0	9.7	0.0	0.0	24.8	39.8	13.6	0.0	0.0	13.0	0.0	9.7
Prop In Lane	1.00		1.00	0.00		1.00	1.00		1.00	1.00		1.00
Lane Grp Cap(c), veh/h	150	2028	631	0	1446	450	418	0	186	408	0	184
V/C Ratio(X)	0.27	0.26	0.00	0.00	0.70	1.11	0.84	0.00	0.00	0.81	0.00	0.61
Avail Cap(c_a), veh/h	190	2143	667	0	1446	450	659	0	294	954	0	430
HCM Platoon Ratio	1.00	1.00	1.00	1.00	1.00	1.00	1.00	1.00	1.00	1.00	1.00	1.00
Upstream Filter(I)	0.99	0.99	0.00	0.00	0.77	0.77	1.00	0.00	0.00	1.00	0.00	1.00
Uniform Delay (d), s/veh	60.0	28.2	0.0	0.0	44.7	50.1	60.5	0.0	0.0	60.1	0.0	58.7
Incr Delay (d2), s/veh	0.9	0.1	0.0	0.0	2.2	70.7	5.6	0.0	0.0	3.8	0.0	3.3
Initial Q Delay(d3),s/veh	0.0	0.0	0.0	0.0	0.0	0.0	0.0	0.0	0.0	0.0	0.0	0.0
%ile BackOfQ(50%),veh/ln	1.5	4.6	0.0	0.0	11.9	26.2	7.0	0.0	0.0	6.4	0.0	4.3
LnGrp Delay(d),s/veh	60.9	28.3	0.0	0.0	46.9	120.8	66.1	0.0	0.0	63.9	0.0	62.0
LnGrp LOS	E	C			D	F	E			E		E
Approach Vol, veh/h		567			1509			351			442	
Approach Delay, s/veh		30.6			71.4			66.1			63.4	
Approach LOS		C			E			E			E	

Timer	1	2	3	4	5	6	7	8
Assigned Phs		2		4	5	6		8
Phs Duration (G+Y+Rc), s		62.8		21.2	16.0	46.8		21.1
Change Period (Y+Rc), s		7.0		4.6	* 4.2	7.0		4.6
Max Green Setting (Gmax), s		59.0		38.8	* 15	39.8		26.0
Max Q Clear Time (g_c+I1), s		11.7		15.0	5.0	41.8		15.6
Green Ext Time (p_c), s		18.0		1.5	0.0	0.0		0.9

Intersection Summary	
HCM 2010 Ctrl Delay	61.4
HCM 2010 LOS	E

Notes

User approved volume balancing among the lanes for turning movement.

Movement	EBL	EBT	WBT	WBR	SBL	SBR
Lane Configurations						
Volume (veh/h)	512	1018	1208	842	0	877
Number	5	2	6	16		
Initial Q (Qb), veh	0	0	0	0		
Ped-Bike Adj(A_pbT)	1.00			1.00		
Parking Bus, Adj	1.00	1.00	1.00	1.00		
Adj Sat Flow, veh/h/ln	1863	1863	1863	1863		
Adj Flow Rate, veh/h	545	1083	1285	0		
Adj No. of Lanes	1	3	2	1		
Peak Hour Factor	0.94	0.94	0.94	0.94		
Percent Heavy Veh, %	2	2	2	2		
Cap, veh/h	569	4910	2195	982		
Arrive On Green	0.32	0.97	0.62	0.00		
Sat Flow, veh/h	1774	5253	3632	1583		
Grp Volume(v), veh/h	545	1083	1285	0		
Grp Sat Flow(s),veh/h/ln	1774	1695	1770	1583		
Q Serve(g_s), s	48.2	1.5	34.7	0.0		
Cycle Q Clear(g_c), s	48.2	1.5	34.7	0.0		
Prop In Lane	1.00			1.00		
Lane Grp Cap(c), veh/h	569	4910	2195	982		
V/C Ratio(X)	0.96	0.22	0.59	0.00		
Avail Cap(c_a), veh/h	632	4910	2195	982		
HCM Platoon Ratio	1.00	1.00	1.00	1.00		
Upstream Filter(I)	0.34	0.34	1.00	0.00		
Uniform Delay (d), s/veh	53.3	0.1	18.1	0.0		
Incr Delay (d2), s/veh	11.9	0.0	1.2	0.0		
Initial Q Delay(d3),s/veh	0.0	0.0	0.0	0.0		
%ile BackOfQ(50%),veh/ln	25.5	0.6	17.1	0.0		
LnGrp Delay(d),s/veh	65.2	0.2	19.3	0.0		
LnGrp LOS	E	A	B			
Approach Vol, veh/h		1628	1285			
Approach Delay, s/veh		21.9	19.3			
Approach LOS		C	B			

Timer	1	2	3	4	5	6	7	8
Assigned Phs		2			5	6		
Phs Duration (G+Y+Rc), s		160.0			55.3	104.7		
Change Period (Y+Rc), s		5.5			4.0	5.5		
Max Green Setting (Gmax), s		154.5			57.0	93.5		
Max Q Clear Time (g_c+I1), s		3.5			50.2	36.7		
Green Ext Time (p_c), s		38.9			1.1	29.6		

Intersection Summary	
HCM 2010 Ctrl Delay	20.8
HCM 2010 LOS	C

Movement	EBL	EBT	EBR	WBL	WBT	WBR	NBL	NBT	NBR	SBL	SBT	SBR
Lane Configurations												
Volume (veh/h)	97	97	166	94	57	166	135	988	107	129	1201	185
Number	7	4	14	3	8	18	5	2	12	1	6	16
Initial Q (Qb), veh	0	0	0	0	0	0	0	0	0	0	0	0
Ped-Bike Adj(A_pbT)	1.00		0.96	1.00		0.97	1.00		1.00	1.00		0.99
Parking Bus, Adj	1.00	1.00	1.00	1.00	1.00	1.00	1.00	1.00	1.00	1.00	1.00	1.00
Adj Sat Flow, veh/h/ln	1863	1863	1863	1863	1863	1863	1863	1863	1900	1863	1863	1863
Adj Flow Rate, veh/h	102	102	175	99	60	175	142	1040	113	136	1264	195
Adj No. of Lanes	2	1	1	1	1	1	2	2	0	1	2	1
Peak Hour Factor	0.95	0.95	0.95	0.95	0.95	0.95	0.95	0.95	0.95	0.95	0.95	0.95
Percent Heavy Veh, %	2	2	2	2	2	2	2	2	2	2	2	2
Cap, veh/h	168	306	250	126	348	287	215	1374	149	169	1626	796
Arrive On Green	0.05	0.16	0.16	0.07	0.19	0.19	0.06	0.43	0.43	0.10	0.46	0.46
Sat Flow, veh/h	3442	1863	1519	1774	1863	1540	3442	3221	350	1774	3539	1564
Grp Volume(v), veh/h	102	102	175	99	60	175	142	571	582	136	1264	195
Grp Sat Flow(s),veh/h/ln	1721	1863	1519	1774	1863	1540	1721	1770	1801	1774	1770	1564
Q Serve(g_s), s	2.3	3.9	8.8	4.4	2.2	8.4	3.3	22.1	22.1	6.1	24.2	5.7
Cycle Q Clear(g_c), s	2.3	3.9	8.8	4.4	2.2	8.4	3.3	22.1	22.1	6.1	24.2	5.7
Prop In Lane	1.00		1.00	1.00		1.00	1.00		0.19	1.00		1.00
Lane Grp Cap(c), veh/h	168	306	250	126	348	287	215	755	768	169	1626	796
V/C Ratio(X)	0.61	0.33	0.70	0.79	0.17	0.61	0.66	0.76	0.76	0.80	0.78	0.25
Avail Cap(c_a), veh/h	298	715	583	147	699	578	222	755	768	196	1666	813
HCM Platoon Ratio	1.00	1.00	1.00	1.00	1.00	1.00	1.00	1.00	1.00	1.00	1.00	1.00
Upstream Filter(I)	1.00	1.00	1.00	1.00	1.00	1.00	1.00	1.00	1.00	1.00	1.00	1.00
Uniform Delay (d), s/veh	37.6	29.8	31.9	36.9	27.6	30.1	37.0	19.6	19.6	35.8	18.3	11.2
Incr Delay (d2), s/veh	1.3	0.6	3.6	17.6	0.1	0.8	5.3	4.6	4.6	16.2	2.5	0.2
Initial Q Delay(d3),s/veh	0.0	0.0	0.0	0.0	0.0	0.0	0.0	0.0	0.0	0.0	0.0	0.0
%ile BackOfQ(50%),veh/ln	1.2	2.1	3.9	2.8	1.1	3.6	1.7	11.6	11.8	3.7	12.3	2.5
LnGrp Delay(d),s/veh	39.0	30.5	35.4	54.4	27.7	30.9	42.3	24.2	24.2	52.0	20.9	11.4
LnGrp LOS	D	C	D	D	C	C	D	C	C	D	C	B
Approach Vol, veh/h		379			334			1295			1595	
Approach Delay, s/veh		35.0			37.3			26.2			22.4	
Approach LOS		D			D			C			C	

Timer	1	2	3	4	5	6	7	8
Assigned Phs	1	2	3	4	5	6	7	8
Phs Duration (G+Y+Rc), s	12.1	39.7	10.1	18.8	9.4	42.4	8.3	20.6
Change Period (Y+Rc), s	4.4	5.3	4.4	* 5.5	4.4	* 5.3	4.4	5.5
Max Green Setting (Gmax), s	8.9	34.2	6.7	* 31	5.2	* 38	7.0	30.3
Max Q Clear Time (g_c+I1), s	8.1	24.1	6.4	10.8	5.3	26.2	4.3	10.4
Green Ext Time (p_c), s	0.0	9.5	0.0	1.6	0.0	10.8	0.0	1.6

Intersection Summary	
HCM 2010 Ctrl Delay	26.4
HCM 2010 LOS	C

Notes

* HCM 2010 computational engine requires equal clearance times for the phases crossing the barrier.

Movement	EBL	EBT	EBR	WBL	WBT	WBR	NBL	NBT	NBR	SBL	SBT	SBR
Lane Configurations												
Volume (veh/h)	0	999	252	280	286	0	0	0	0	407	1	1229
Number	5	2	12	1	6	16				7	4	14
Initial Q (Qb), veh	0	0	0	0	0	0				0	0	0
Ped-Bike Adj(A_pbT)	1.00		1.00	1.00		1.00				1.00		1.00
Parking Bus, Adj	1.00	1.00	1.00	1.00	1.00	1.00				1.00	1.00	1.00
Adj Sat Flow, veh/h/ln	0	1863	1863	1863	1863	0				1900	1863	1863
Adj Flow Rate, veh/h	0	1041	262	292	298	0				424	1	0
Adj No. of Lanes	0	2	1	2	2	0				0	1	1
Peak Hour Factor	0.96	0.96	0.96	0.96	0.96	0.96				0.96	0.96	0.96
Percent Heavy Veh, %	0	2	2	2	2	0				2	2	2
Cap, veh/h	0	1727	772	370	2256	0				472	1	422
Arrive On Green	0.00	0.49	0.49	0.04	0.21	0.00				0.27	0.27	0.00
Sat Flow, veh/h	0	3632	1583	3442	3632	0				1770	4	1583
Grp Volume(v), veh/h	0	1041	262	292	298	0				425	0	0
Grp Sat Flow(s),veh/h/ln	0	1770	1583	1721	1770	0				1774	0	1583
Q Serve(g_s), s	0.0	21.3	10.2	8.4	6.8	0.0				23.1	0.0	0.0
Cycle Q Clear(g_c), s	0.0	21.3	10.2	8.4	6.8	0.0				23.1	0.0	0.0
Prop In Lane	0.00		1.00	1.00		0.00				1.00		1.00
Lane Grp Cap(c), veh/h	0	1727	772	370	2256	0				473	0	422
V/C Ratio(X)	0.00	0.60	0.34	0.79	0.13	0.00				0.90	0.00	0.00
Avail Cap(c_a), veh/h	0	1727	772	475	2256	0				575	0	513
HCM Platoon Ratio	1.00	1.00	1.00	0.33	0.33	1.00				1.00	1.00	1.00
Upstream Filter(I)	0.00	1.00	1.00	0.74	0.74	0.00				1.00	0.00	0.00
Uniform Delay (d), s/veh	0.0	18.6	15.7	47.1	17.0	0.0				35.4	0.0	0.0
Incr Delay (d2), s/veh	0.0	1.6	1.2	5.1	0.1	0.0				15.0	0.0	0.0
Initial Q Delay(d3),s/veh	0.0	0.0	0.0	0.0	0.0	0.0				0.0	0.0	0.0
%ile BackOfQ(50%),veh/ln	0.0	10.8	4.7	4.3	3.4	0.0				13.3	0.0	0.0
LnGrp Delay(d),s/veh	0.0	20.1	16.9	52.2	17.1	0.0				50.3	0.0	0.0
LnGrp LOS		C	B	D	B					D		
Approach Vol, veh/h		1303			590						425	
Approach Delay, s/veh		19.5			34.5						50.3	
Approach LOS		B			C						D	

Timer	1	2	3	4	5	6	7	8
Assigned Phs	1	2		4		6		
Phs Duration (G+Y+Rc), s	15.0	53.8		31.3		68.7		
Change Period (Y+Rc), s *	4.2	5.0		4.6		5.0		
Max Green Setting (Gmax), s	* 14	40.0		32.4		58.0		
Max Q Clear Time (g_c+I1), s	10.4	23.3		25.1		8.8		
Green Ext Time (p_c), s	0.3	9.6		1.6		15.5		

Intersection Summary	
HCM 2010 Ctrl Delay	29.0
HCM 2010 LOS	C

Notes

* HCM 2010 computational engine requires equal clearance times for the phases crossing the barrier.

Movement	EBL	EBT	EBR	WBL	WBT	WBR	NBL	NBT	NBR	SBL	SBT	SBR
Lane Configurations												
Volume (veh/h)	825	581	0	0	341	445	225	0	444	0	0	0
Number	5	2	12	1	6	16	7	4	14			
Initial Q (Qb), veh	0	0	0	0	0	0	0	0	0			
Ped-Bike Adj(A_pbT)	1.00		1.00	1.00		0.98	1.00		1.00			
Parking Bus, Adj	1.00	1.00	1.00	1.00	1.00	1.00	1.00	1.00	1.00			
Adj Sat Flow, veh/h/ln	1863	1863	0	0	1863	1900	1900	1863	1863			
Adj Flow Rate, veh/h	887	625	0	0	367	478	242	0	477			
Adj No. of Lanes	2	2	0	0	2	0	0	1	1			
Peak Hour Factor	0.93	0.93	0.93	0.93	0.93	0.93	0.93	0.93	0.93			
Percent Heavy Veh, %	2	2	0	0	2	2	2	2	2			
Cap, veh/h	964	2283	0	0	571	499	451	0	402			
Arrive On Green	0.47	1.00	0.00	0.00	0.32	0.32	0.25	0.00	0.25			
Sat Flow, veh/h	3442	3632	0	0	1863	1544	1774	0	1583			
Grp Volume(v), veh/h	887	625	0	0	367	478	242	0	477			
Grp Sat Flow(s),veh/h/ln	1721	1770	0	0	1770	1544	1774	0	1583			
Q Serve(g_s), s	24.1	0.0	0.0	0.0	17.7	30.4	11.8	0.0	25.4			
Cycle Q Clear(g_c), s	24.1	0.0	0.0	0.0	17.7	30.4	11.8	0.0	25.4			
Prop In Lane	1.00		0.00	0.00		1.00	1.00		1.00			
Lane Grp Cap(c), veh/h	964	2283	0	0	571	499	451	0	402			
V/C Ratio(X)	0.92	0.27	0.00	0.00	0.64	0.96	0.54	0.00	1.19			
Avail Cap(c_a), veh/h	1094	2283	0	0	571	499	451	0	402			
HCM Platoon Ratio	1.67	1.67	1.00	1.00	1.00	1.00	1.00	1.00	1.00			
Upstream Filter(I)	0.72	0.72	0.00	0.00	0.84	0.84	1.00	0.00	1.00			
Uniform Delay (d), s/veh	25.6	0.0	0.0	0.0	28.9	33.2	32.2	0.0	37.3			
Incr Delay (d2), s/veh	8.7	0.2	0.0	0.0	4.6	28.1	1.3	0.0	106.2			
Initial Q Delay(d3),s/veh	0.0	0.0	0.0	0.0	0.0	0.0	0.0	0.0	0.0			
%ile BackOfQ(50%),veh/ln	12.5	0.1	0.0	0.0	9.4	16.8	5.9	0.0	31.3			
LnGrp Delay(d),s/veh	34.3	0.2	0.0	0.0	33.6	61.3	33.5	0.0	143.5			
LnGrp LOS	C	A			C	E	C		F			
Approach Vol, veh/h		1512			845			719				
Approach Delay, s/veh		20.2			49.2			106.5				
Approach LOS		C			D			F				

Timer	1	2	3	4	5	6	7	8
Assigned Phs		2		4	5	6		
Phs Duration (G+Y+Rc), s		70.0		30.0	32.2	37.8		
Change Period (Y+Rc), s		5.5		4.6	* 4.2	5.5		
Max Green Setting (Gmax), s		64.5		25.4	* 32	28.5		
Max Q Clear Time (g_c+I1), s		2.0		27.4	26.1	32.4		
Green Ext Time (p_c), s		15.5		0.0	1.9	0.0		

Intersection Summary	
HCM 2010 Ctrl Delay	48.3
HCM 2010 LOS	D

Notes

* HCM 2010 computational engine requires equal clearance times for the phases crossing the barrier.

Movement	EBL	EBT	EBR	WBL	WBT	WBR	NBL	NBT	NBR	SBL	SBT	SBR
Lane Configurations												
Volume (veh/h)	472	55	558	26	66	30	465	197	18	17	179	319
Number	5	2	12	1	6	16	3	8	18	7	4	14
Initial Q (Qb), veh	0	0	0	0	0	0	0	0	0	0	0	0
Ped-Bike Adj(A_pbT)	1.00		1.00	1.00		1.00	1.00		1.00	1.00		1.00
Parking Bus, Adj	1.00	1.00	1.00	1.00	1.00	1.00	1.00	1.00	1.00	1.00	1.00	1.00
Adj Sat Flow, veh/h/ln	1863	1863	1863	1863	1863	1900	1863	1863	1900	1900	1863	1863
Adj Flow Rate, veh/h	519	60	613	29	73	33	511	216	20	19	298	284
Adj No. of Lanes	2	1	1	1	2	0	2	1	0	0	1	1
Peak Hour Factor	0.91	0.91	0.91	0.91	0.91	0.91	0.91	0.91	0.91	0.91	0.91	0.91
Percent Heavy Veh, %	2	2	2	2	2	2	2	2	2	2	2	2
Cap, veh/h	1129	611	821	135	185	79	675	319	30	20	320	290
Arrive On Green	0.33	0.33	0.33	0.08	0.08	0.08	0.19	0.19	0.19	0.18	0.18	0.18
Sat Flow, veh/h	3442	1863	1583	1774	2419	1031	3548	1680	156	111	1746	1583
Grp Volume(v), veh/h	519	60	613	29	52	54	511	0	236	317	0	284
Grp Sat Flow(s),veh/h/ln	1721	1863	1583	1774	1770	1681	1774	0	1835	1857	0	1583
Q Serve(g_s), s	10.5	2.0	26.9	1.4	2.5	2.7	12.0	0.0	10.6	14.8	0.0	15.8
Cycle Q Clear(g_c), s	10.5	2.0	26.9	1.4	2.5	2.7	12.0	0.0	10.6	14.8	0.0	15.8
Prop In Lane	1.00		1.00	1.00		0.61	1.00		0.08	0.06		1.00
Lane Grp Cap(c), veh/h	1129	611	821	135	135	128	675	0	349	341	0	290
V/C Ratio(X)	0.46	0.10	0.75	0.21	0.39	0.42	0.76	0.00	0.68	0.93	0.00	0.98
Avail Cap(c_a), veh/h	1130	612	821	362	361	343	1093	0	565	341	0	290
HCM Platoon Ratio	1.00	1.00	1.00	1.00	1.00	1.00	1.00	1.00	1.00	1.00	1.00	1.00
Upstream Filter(I)	1.00	1.00	1.00	1.00	1.00	1.00	1.00	0.00	1.00	1.00	0.00	1.00
Uniform Delay (d), s/veh	23.5	20.6	16.7	38.3	38.8	38.9	33.8	0.0	33.2	35.5	0.0	35.9
Incr Delay (d2), s/veh	0.6	0.1	4.4	0.8	1.8	2.2	1.8	0.0	2.3	31.4	0.0	46.5
Initial Q Delay(d3),s/veh	0.0	0.0	0.0	0.0	0.0	0.0	0.0	0.0	0.0	0.0	0.0	0.0
%ile BackOfQ(50%),veh/ln	5.1	1.0	15.8	0.7	1.3	1.3	6.1	0.0	5.6	10.5	0.0	10.6
LnGrp Delay(d),s/veh	24.0	20.7	21.1	39.1	40.6	41.1	35.6	0.0	35.5	66.9	0.0	82.4
LnGrp LOS	C	C	C	D	D	D	D		D	E		F
Approach Vol, veh/h		1192			135			747			601	
Approach Delay, s/veh		22.4			40.5			35.6			74.3	
Approach LOS		C			D			D			E	

Timer	1	2	3	4	5	6	7	8
Assigned Phs		2		4		6		8
Phs Duration (G+Y+Rc), s		33.9		21.1		11.6		21.7
Change Period (Y+Rc), s		4.9		4.9		4.9		4.9
Max Green Setting (Gmax), s		29.0		16.2		18.0		27.2
Max Q Clear Time (g_c+I1), s		28.9		17.8		4.7		14.0
Green Ext Time (p_c), s		0.1		0.0		0.5		2.8

Intersection Summary	
HCM 2010 Ctrl Delay	38.6
HCM 2010 LOS	D

Notes

User approved volume balancing among the lanes for turning movement.

Movement	EBL	EBT	EBR	WBL	WBT	WBR	NBL	NBT	NBR	SBL	SBT	SBR
Lane Configurations												
Volume (veh/h)	57	4	30	57	6	21	26	548	32	11	613	43
Number	7	4	14	3	8	18	5	2	12	1	6	16
Initial Q (Qb), veh	0	0	0	0	0	0	0	0	0	0	0	0
Ped-Bike Adj(A_pbT)	1.00		1.00	1.00		1.00	1.00		1.00	1.00		1.00
Parking Bus, Adj	1.00	1.00	1.00	1.00	1.00	1.00	1.00	1.00	1.00	1.00	1.00	1.00
Adj Sat Flow, veh/h/ln	1900	1863	1900	1900	1863	1900	1863	1863	1900	1863	1863	1900
Adj Flow Rate, veh/h	62	4	33	62	7	23	28	596	35	12	666	47
Adj No. of Lanes	0	1	0	0	1	0	1	1	0	1	1	0
Peak Hour Factor	0.92	0.92	0.92	0.92	0.92	0.92	0.92	0.92	0.92	0.92	0.92	0.91
Percent Heavy Veh, %	2	2	2	2	2	2	2	2	2	2	2	2
Cap, veh/h	147	11	46	154	17	34	40	1283	75	20	1247	88
Arrive On Green	0.08	0.08	0.08	0.08	0.08	0.08	0.02	0.74	0.74	0.01	0.73	0.73
Sat Flow, veh/h	966	132	549	1023	195	406	1774	1742	102	1774	1720	121
Grp Volume(v), veh/h	99	0	0	92	0	0	28	0	631	12	0	713
Grp Sat Flow(s),veh/h/ln	1647	0	0	1624	0	0	1774	0	1845	1774	0	1841
Q Serve(g_s), s	0.3	0.0	0.0	0.0	0.0	0.0	1.4	0.0	12.3	0.6	0.0	15.6
Cycle Q Clear(g_c), s	4.9	0.0	0.0	4.7	0.0	0.0	1.4	0.0	12.3	0.6	0.0	15.6
Prop In Lane	0.63		0.33	0.67		0.25	1.00		0.06	1.00		0.07
Lane Grp Cap(c), veh/h	204	0	0	204	0	0	40	0	1358	20	0	1335
V/C Ratio(X)	0.48	0.00	0.00	0.45	0.00	0.00	0.71	0.00	0.46	0.59	0.00	0.53
Avail Cap(c_a), veh/h	744	0	0	740	0	0	79	0	1358	79	0	1335
HCM Platoon Ratio	1.00	1.00	1.00	1.00	1.00	1.00	1.00	1.00	1.00	1.00	1.00	1.00
Upstream Filter(I)	1.00	0.00	0.00	1.00	0.00	0.00	1.00	0.00	1.00	1.00	0.00	1.00
Uniform Delay (d), s/veh	39.9	0.0	0.0	39.8	0.0	0.0	43.7	0.0	4.8	44.3	0.0	5.5
Incr Delay (d2), s/veh	0.7	0.0	0.0	0.6	0.0	0.0	8.2	0.0	1.1	9.6	0.0	1.5
Initial Q Delay(d3),s/veh	0.0	0.0	0.0	0.0	0.0	0.0	0.0	0.0	0.0	0.0	0.0	0.0
%ile BackOfQ(50%),veh/ln	2.4	0.0	0.0	2.2	0.0	0.0	0.8	0.0	6.6	0.4	0.0	8.3
LnGrp Delay(d),s/veh	40.6	0.0	0.0	40.4	0.0	0.0	51.9	0.0	5.9	53.8	0.0	7.1
LnGrp LOS	D			D			D		A	D		A
Approach Vol, veh/h		99			92			659			725	
Approach Delay, s/veh		40.6			40.4			7.9			7.9	
Approach LOS		D			D			A			A	

Timer	1	2	3	4	5	6	7	8
Assigned Phs	1	2		4	5	6		8
Phs Duration (G+Y+Rc), s	5.4	72.0		12.5	6.4	71.1		12.5
Change Period (Y+Rc), s	4.4	* 5.8		4.9	4.4	5.8		4.9
Max Green Setting (Gmax), s	1.0	* 30		41.0	4.0	29.9		41.0
Max Q Clear Time (g_c+I1), s	2.6	14.3		6.9	3.4	17.6		6.7
Green Ext Time (p_c), s	0.0	10.2		0.7	0.0	8.4		0.7

Intersection Summary	
HCM 2010 Ctrl Delay	11.8
HCM 2010 LOS	B

Notes

* HCM 2010 computational engine requires equal clearance times for the phases crossing the barrier.

Movement	NBT	NBR	SBL	SBT	SWL	SWR
Lane Configurations						
Volume (veh/h)	454	647	0	622	699	17
Number	2	12	1	6	3	18
Initial Q (Qb), veh	0	0	0	0	0	0
Ped-Bike Adj(A_pbT)		1.00	1.00		1.00	1.00
Parking Bus, Adj	1.00	1.00	1.00	1.00	1.00	1.00
Adj Sat Flow, veh/h/ln	1863	1900	0	1863	1863	1900
Adj Flow Rate, veh/h	493	703	0	676	777	0
Adj No. of Lanes	2	0	0	2	2	1
Peak Hour Factor	0.92	0.92	0.92	0.92	0.92	0.92
Percent Heavy Veh, %	2	2	0	2	2	0
Cap, veh/h	825	738	0	1649	1011	460
Arrive On Green	0.47	0.47	0.00	0.47	0.28	0.00
Sat Flow, veh/h	1863	1583	0	3725	3548	1615
Grp Volume(v), veh/h	493	703	0	676	777	0
Grp Sat Flow(s),veh/h/ln	1770	1583	0	1770	1774	1615
Q Serve(g_s), s	8.9	18.3	0.0	5.4	8.6	0.0
Cycle Q Clear(g_c), s	8.9	18.3	0.0	5.4	8.6	0.0
Prop In Lane		1.00	0.00		1.00	1.00
Lane Grp Cap(c), veh/h	825	738	0	1649	1011	460
V/C Ratio(X)	0.60	0.95	0.00	0.41	0.77	0.00
Avail Cap(c_a), veh/h	825	738	0	1649	1331	606
HCM Platoon Ratio	1.00	1.00	1.00	1.00	1.00	1.00
Upstream Filter(I)	1.00	1.00	0.00	1.00	1.00	0.00
Uniform Delay (d), s/veh	8.5	11.0	0.0	7.6	14.1	0.0
Incr Delay (d2), s/veh	3.2	23.4	0.0	0.8	2.0	0.0
Initial Q Delay(d3),s/veh	0.0	0.0	0.0	0.0	0.0	0.0
%ile BackOfQ(50%),veh/ln	5.0	12.6	0.0	2.8	4.5	0.0
LnGrp Delay(d),s/veh	11.7	34.5	0.0	8.3	16.1	0.0
LnGrp LOS	B	C		A	B	
Approach Vol, veh/h	1196			676	777	
Approach Delay, s/veh	25.1			8.3	16.1	
Approach LOS	C			A	B	

Timer	1	2	3	4	5	6	7	8
Assigned Phs		2				6		8
Phs Duration (G+Y+Rc), s		25.8				25.8		17.1
Change Period (Y+Rc), s		* 5.8				5.8		4.9
Max Green Setting (Gmax), s		* 20				16.2		16.1
Max Q Clear Time (g_c+I1), s		20.3				7.4		10.6
Green Ext Time (p_c), s		0.0				6.9		1.6

Intersection Summary	
HCM 2010 Ctrl Delay	18.2
HCM 2010 LOS	B

Notes

User approved volume balancing among the lanes for turning movement.

Movement	EBL	EBT	EBR	WBL	WBT	WBR	NBL	NBT	NBR	SBL	SBT	SBR
Lane Configurations												
Volume (veh/h)	37	33	160	15	12	602	70	375	16	706	673	33
Number	7	4	14	3	8	18	5	2	12	1	6	16
Initial Q (Qb), veh	0	0	0	0	0	0	0	0	0	0	0	0
Ped-Bike Adj(A_pbT)	1.00		1.00	1.00		1.00	1.00		1.00	1.00		1.00
Parking Bus, Adj	1.00	1.00	1.00	1.00	1.00	1.00	1.00	1.00	1.00	1.00	1.00	1.00
Adj Sat Flow, veh/h/ln	1863	1863	1900	1900	1863	1863	1863	1863	1900	1863	1863	1900
Adj Flow Rate, veh/h	38	34	163	0	0	638	71	383	16	720	687	34
Adj No. of Lanes	1	1	0	0	1	2	1	3	0	2	2	0
Peak Hour Factor	0.98	0.98	0.98	0.98	0.98	0.98	0.98	0.98	0.98	0.98	0.98	0.98
Percent Heavy Veh, %	2	2	2	2	2	2	2	2	2	2	2	2
Cap, veh/h	196	51	244	0	339	1301	90	2414	100	788	2266	112
Arrive On Green	0.18	0.18	0.18	0.00	0.00	0.18	0.05	0.48	0.48	0.23	0.66	0.66
Sat Flow, veh/h	787	281	1345	0	1863	3167	1774	5009	208	3442	3433	170
Grp Volume(v), veh/h	38	0	197	0	0	638	71	258	141	720	354	367
Grp Sat Flow(s),veh/h/ln	787	0	1625	0	1863	1583	1774	1695	1826	1721	1770	1833
Q Serve(g_s), s	5.6	0.0	15.3	0.0	0.0	20.2	5.4	5.8	5.9	27.7	11.6	11.6
Cycle Q Clear(g_c), s	5.6	0.0	15.3	0.0	0.0	20.2	5.4	5.8	5.9	27.7	11.6	11.6
Prop In Lane	1.00		0.83	0.00		1.00	1.00		0.11	1.00		0.09
Lane Grp Cap(c), veh/h	196	0	295	0	339	1301	90	1634	880	788	1168	1210
V/C Ratio(X)	0.19	0.00	0.67	0.00	0.00	0.49	0.79	0.16	0.16	0.91	0.30	0.30
Avail Cap(c_a), veh/h	291	0	491	0	563	1682	217	1634	880	1306	1168	1210
HCM Platoon Ratio	1.00	1.00	1.00	1.00	1.00	1.00	1.00	1.00	1.00	1.00	1.00	1.00
Upstream Filter(I)	1.00	0.00	1.00	0.00	0.00	0.69	1.00	1.00	1.00	1.00	1.00	1.00
Uniform Delay (d), s/veh	47.8	0.0	51.8	0.0	0.0	29.6	63.8	19.8	19.8	51.1	9.8	9.8
Incr Delay (d2), s/veh	0.2	0.0	1.0	0.0	0.0	0.1	5.6	0.2	0.4	3.8	0.7	0.6
Initial Q Delay(d3),s/veh	0.0	0.0	0.0	0.0	0.0	0.0	0.0	0.0	0.0	0.0	0.0	0.0
%ile BackOfQ(50%),veh/ln	1.2	0.0	7.0	0.0	0.0	8.8	2.8	2.8	3.1	13.6	5.8	6.0
LnGrp Delay(d),s/veh	48.0	0.0	52.8	0.0	0.0	29.6	69.4	20.0	20.2	55.0	10.5	10.5
LnGrp LOS	D		D			C	E	B	C	D	B	B
Approach Vol, veh/h		235			638			470			1441	
Approach Delay, s/veh		52.0			29.6			27.5			32.7	
Approach LOS		D			C			C			C	

Timer	1	2	3	4	5	6	7	8
Assigned Phs	1	2		4	5	6		8
Phs Duration (G+Y+Rc), s	35.5	70.8		29.6	11.3	95.1		29.6
Change Period (Y+Rc), s	4.4	* 5.3		4.9	4.4	5.3		4.9
Max Green Setting (Gmax), s	31.6	* 29		41.1	16.6	63.7		41.1
Max Q Clear Time (g_c+I1), s	29.7	7.9		17.3	7.4	13.6		22.2
Green Ext Time (p_c), s	1.4	7.0		2.6	0.0	8.4		2.5

Intersection Summary	
HCM 2010 Ctrl Delay	32.8
HCM 2010 LOS	C

Notes

User approved volume balancing among the lanes for turning movement.

Movement	WBL	WBR	NBT	NBR	SBL	SBT
Lane Configurations						
Volume (veh/h)	913	10	504	903	0	821
Number	3	18	2	12	1	6
Initial Q (Qb), veh	0	0	0	0	0	0
Ped-Bike Adj(A_pbT)	1.00	1.00		1.00	1.00	
Parking Bus, Adj	1.00	1.00	1.00	1.00	1.00	1.00
Adj Sat Flow, veh/h/ln	1863	1900	1863	1863	0	1863
Adj Flow Rate, veh/h	960	0	525	0	0	855
Adj No. of Lanes	2	1	2	1	0	2
Peak Hour Factor	0.96	0.96	0.96	0.96	0.96	0.96
Percent Heavy Veh, %	2	0	2	2	0	2
Cap, veh/h	1162	529	1641	734	0	1641
Arrive On Green	0.33	0.00	0.46	0.00	0.00	0.46
Sat Flow, veh/h	3548	1615	3632	1583	0	3725
Grp Volume(v), veh/h	960	0	525	0	0	855
Grp Sat Flow(s),veh/h/ln	1774	1615	1770	1583	0	1770
Q Serve(g_s), s	17.0	0.0	6.4	0.0	0.0	11.6
Cycle Q Clear(g_c), s	17.0	0.0	6.4	0.0	0.0	11.6
Prop In Lane	1.00	1.00		1.00	0.00	
Lane Grp Cap(c), veh/h	1162	529	1641	734	0	1641
V/C Ratio(X)	0.83	0.00	0.32	0.00	0.00	0.52
Avail Cap(c_a), veh/h	1424	648	1641	734	0	1641
HCM Platoon Ratio	1.00	1.00	1.00	1.00	1.00	1.00
Upstream Filter(I)	1.00	0.00	1.00	0.00	0.00	1.00
Uniform Delay (d), s/veh	21.1	0.0	11.5	0.0	0.0	12.9
Incr Delay (d2), s/veh	3.7	0.0	0.5	0.0	0.0	1.2
Initial Q Delay(d3),s/veh	0.0	0.0	0.0	0.0	0.0	0.0
%ile BackOfQ(50%),veh/ln	8.9	0.0	3.2	0.0	0.0	5.9
LnGrp Delay(d),s/veh	24.8	0.0	12.0	0.0	0.0	14.1
LnGrp LOS	C		B			B
Approach Vol, veh/h	960		525			855
Approach Delay, s/veh	24.8		12.0			14.1
Approach LOS	C		B			B

Timer	1	2	3	4	5	6	7	8
Assigned Phs		2				6		8
Phs Duration (G+Y+Rc), s		37.0				37.0		31.0
Change Period (Y+Rc), s		5.5				* 5.5		8.7
Max Green Setting (Gmax), s		26.5				* 27		27.3
Max Q Clear Time (g_c+I1), s		8.4				13.6		19.0
Green Ext Time (p_c), s		12.2				9.5		3.3

Intersection Summary	
HCM 2010 Ctrl Delay	18.0
HCM 2010 LOS	B

Notes

User approved volume balancing among the lanes for turning movement.

Movement	EBL	EBT	EBR	WBL	WBT	WBR	NBL	NBT	NBR	SBL	SBT	SBR
Lane Configurations												
Volume (veh/h)	473	266	24	230	193	131	37	693	219	211	697	392
Number	7	4	14	3	8	18	5	2	12	1	6	16
Initial Q (Qb), veh	0	0	0	0	0	0	0	0	0	0	0	0
Ped-Bike Adj(A_pbT)	1.00		1.00	1.00		1.00	1.00		1.00	1.00		1.00
Parking Bus, Adj	1.00	1.00	1.00	1.00	1.00	1.00	1.00	1.00	1.00	1.00	1.00	1.00
Adj Sat Flow, veh/h/ln	1863	1863	1900	1863	1863	1863	1863	1863	1900	1863	1863	1900
Adj Flow Rate, veh/h	406	419	26	250	198	139	39	737	233	224	741	417
Adj No. of Lanes	1	1	0	2	1	1	1	2	0	1	2	0
Peak Hour Factor	0.94	0.94	0.94	0.94	0.94	0.94	0.94	0.94	0.94	0.94	0.94	0.94
Percent Heavy Veh, %	2	2	2	2	2	2	2	2	2	2	2	2
Cap, veh/h	465	455	28	448	235	200	50	888	281	235	962	539
Arrive On Green	0.26	0.26	0.26	0.13	0.13	0.13	0.03	0.34	0.34	0.13	0.44	0.44
Sat Flow, veh/h	1774	1736	108	3548	1863	1583	1774	2648	837	1774	2188	1227
Grp Volume(v), veh/h	406	0	445	250	198	139	39	493	477	224	599	559
Grp Sat Flow(s),veh/h/ln	1774	0	1844	1774	1863	1583	1774	1770	1715	1774	1770	1646
Q Serve(g_s), s	29.8	0.0	31.9	9.0	14.1	11.4	3.0	34.9	34.9	17.1	39.0	39.2
Cycle Q Clear(g_c), s	29.8	0.0	31.9	9.0	14.1	11.4	3.0	34.9	34.9	17.1	39.0	39.2
Prop In Lane	1.00		0.06	1.00		1.00	1.00		0.49	1.00		0.75
Lane Grp Cap(c), veh/h	465	0	483	448	235	200	50	593	575	235	778	724
V/C Ratio(X)	0.87	0.00	0.92	0.56	0.84	0.70	0.78	0.83	0.83	0.95	0.77	0.77
Avail Cap(c_a), veh/h	497	0	517	629	330	281	69	593	575	235	778	724
HCM Platoon Ratio	1.00	1.00	1.00	1.00	1.00	1.00	1.00	1.00	1.00	1.00	1.00	1.00
Upstream Filter(I)	0.56	0.00	0.56	1.00	1.00	1.00	1.00	1.00	1.00	1.00	1.00	1.00
Uniform Delay (d), s/veh	48.0	0.0	48.8	55.8	58.1	56.9	65.7	41.6	41.6	58.6	32.3	32.3
Incr Delay (d2), s/veh	9.2	0.0	13.8	0.4	9.5	1.6	20.9	12.7	13.1	45.5	7.2	7.9
Initial Q Delay(d3),s/veh	0.0	0.0	0.0	0.0	0.0	0.0	0.0	0.0	0.0	0.0	0.0	0.0
%ile BackOfQ(50%),veh/ln	15.7	0.0	18.2	4.4	7.9	5.1	1.8	19.1	18.5	11.3	20.5	19.4
LnGrp Delay(d),s/veh	57.3	0.0	62.7	56.3	67.6	58.5	86.6	54.3	54.7	104.1	39.5	40.2
LnGrp LOS	E		E	E	E	E	F	D	D	F	D	D
Approach Vol, veh/h		851			587			1009			1382	
Approach Delay, s/veh		60.1			60.6			55.7			50.3	
Approach LOS		E			E			E			D	

Timer	1	2	3	4	5	6	7	8
Assigned Phs	1	2		4	5	6		8
Phs Duration (G+Y+Rc), s	22.4	51.0		40.5	8.2	65.2		22.1
Change Period (Y+Rc), s	4.4	* 5.4		4.9	4.4	5.4		4.9
Max Green Setting (Gmax), s	18.0	* 37		38.1	5.3	48.9		24.1
Max Q Clear Time (g_c+I1), s	19.1	36.9		33.9	5.0	41.2		16.1
Green Ext Time (p_c), s	0.0	0.0		1.7	0.0	5.5		1.0

Intersection Summary	
HCM 2010 Ctrl Delay	55.5
HCM 2010 LOS	E

Notes

User approved volume balancing among the lanes for turning movement.

Movement	EBL	EBT	EBR	WBL	WBT	WBR	NBL	NBT	NBR	SBL	SBT	SBR
Lane Configurations												
Volume (veh/h)	285	901	94	5	811	49	68	9	11	133	23	489
Number	5	2	12	1	6	16	3	8	18	7	4	14
Initial Q (Qb), veh	0	0	0	0	0	0	0	0	0	0	0	0
Ped-Bike Adj(A_pbT)	1.00		1.00	1.00		1.00	1.00		1.00	1.00		1.00
Parking Bus, Adj	1.00	1.00	1.00	1.00	1.00	1.00	1.00	1.00	1.00	1.00	1.00	1.00
Adj Sat Flow, veh/h/ln	1863	1863	1900	1863	1863	1900	1900	1863	1900	1900	1863	1863
Adj Flow Rate, veh/h	313	990	103	5	891	54	75	10	12	146	25	537
Adj No. of Lanes	1	2	0	1	2	0	0	1	0	0	1	1
Peak Hour Factor	0.91	0.91	0.91	0.91	0.91	0.91	0.91	0.91	0.91	0.91	0.91	0.91
Percent Heavy Veh, %	2	2	2	2	2	2	2	2	2	2	2	2
Cap, veh/h	338	2078	216	9	1547	94	154	21	18	356	53	687
Arrive On Green	0.19	0.64	0.64	0.01	0.46	0.46	0.24	0.24	0.24	0.24	0.24	0.24
Sat Flow, veh/h	1774	3236	337	1774	3391	205	440	87	74	1261	216	1583
Grp Volume(v), veh/h	313	541	552	5	465	480	97	0	0	171	0	537
Grp Sat Flow(s),veh/h/ln	1774	1770	1803	1774	1770	1826	601	0	0	1477	0	1583
Q Serve(g_s), s	23.6	21.5	21.5	0.4	26.4	26.4	11.9	0.0	0.0	0.0	0.0	33.1
Cycle Q Clear(g_c), s	23.6	21.5	21.5	0.4	26.4	26.4	25.3	0.0	0.0	13.3	0.0	33.1
Prop In Lane	1.00		0.19	1.00		0.11	0.77		0.12	0.85		1.00
Lane Grp Cap(c), veh/h	338	1136	1158	9	807	833	193	0	0	409	0	687
V/C Ratio(X)	0.92	0.48	0.48	0.56	0.58	0.58	0.50	0.00	0.00	0.42	0.00	0.78
Avail Cap(c_a), veh/h	477	1136	1158	60	807	833	193	0	0	409	0	687
HCM Platoon Ratio	1.00	1.00	1.00	1.00	1.00	1.00	1.00	1.00	1.00	1.00	1.00	1.00
Upstream Filter(I)	1.00	1.00	1.00	1.00	1.00	1.00	1.00	0.00	0.00	1.00	0.00	1.00
Uniform Delay (d), s/veh	54.1	12.6	12.6	67.5	27.3	27.3	53.2	0.0	0.0	44.0	0.0	32.9
Incr Delay (d2), s/veh	16.2	1.4	1.4	18.5	3.0	2.9	0.8	0.0	0.0	0.3	0.0	5.3
Initial Q Delay(d3),s/veh	0.0	0.0	0.0	0.0	0.0	0.0	0.0	0.0	0.0	0.0	0.0	0.0
%ile BackOfQ(50%),veh/ln	13.1	10.8	11.0	0.2	13.6	14.0	3.5	0.0	0.0	5.5	0.0	18.2
LnGrp Delay(d),s/veh	70.3	14.0	14.0	86.0	30.2	30.2	54.0	0.0	0.0	44.2	0.0	38.2
LnGrp LOS	E	B	B	F	C	C	D			D		D
Approach Vol, veh/h		1406			950			97			708	
Approach Delay, s/veh		26.5			30.5			54.0			39.7	
Approach LOS		C			C			D			D	

Timer	1	2	3	4	5	6	7	8
Assigned Phs	1	2		4	5	6		8
Phs Duration (G+Y+Rc), s	5.1	92.9		38.0	30.3	67.7		38.0
Change Period (Y+Rc), s	4.4	* 5.6		4.9	4.4	5.6		4.9
Max Green Setting (Gmax), s	4.6	* 84		33.1	36.6	51.4		33.1
Max Q Clear Time (g_c+I1), s	2.4	23.5		35.1	25.6	28.4		27.3
Green Ext Time (p_c), s	0.0	51.9		0.0	0.4	21.5		1.4

Intersection Summary	
HCM 2010 Ctrl Delay	31.5
HCM 2010 LOS	C

Notes

* HCM 2010 computational engine requires equal clearance times for the phases crossing the barrier.

Intersection	
Int Delay, s/veh	1.8

Movement	EBT	EBR	WBL	WBT	NBL	NBR
Vol, veh/h	895	48	52	802	24	31
Conflicting Peds, #/hr	0	18	0	0	0	0
Sign Control	Free	Free	Free	Free	Stop	Stop
RT Channelized	-	None	-	None	-	None
Storage Length	-	-	100	-	0	-
Veh in Median Storage, #	0	-	-	0	0	-
Grade, %	0	-	-	0	0	-
Peak Hour Factor	84	84	84	84	84	84
Heavy Vehicles, %	2	2	2	2	2	2
Mvmt Flow	1065	57	62	955	29	37

Major/Minor	Major1		Major2		Minor1	
Conflicting Flow All	0	0	1123	0	1695	561
Stage 1	-	-	-	-	1094	-
Stage 2	-	-	-	-	601	-
Critical Hdwy	-	-	4.14	-	6.84	6.94
Critical Hdwy Stg 1	-	-	-	-	5.84	-
Critical Hdwy Stg 2	-	-	-	-	5.84	-
Follow-up Hdwy	-	-	2.22	-	3.52	3.32
Pot Cap-1 Maneuver	-	-	618	-	84	471
Stage 1	-	-	-	-	282	-
Stage 2	-	-	-	-	510	-
Platoon blocked, %	-	-		-		
Mov Cap-1 Maneuver	-	-	618	-	74	471
Mov Cap-2 Maneuver	-	-	-	-	74	-
Stage 1	-	-	-	-	282	-
Stage 2	-	-	-	-	452	-

Approach	EB	WB	NB
HCM Control Delay, s	0	0.7	50.9
HCM LOS			F

Minor Lane/Major Mvmt	NBLn1	EBT	EBR	WBL	WBT
Capacity (veh/h)	141	-	-	618	-
HCM Lane V/C Ratio	0.464	-	-	0.1	-
HCM Control Delay (s)	50.9	-	-	11.5	-
HCM Lane LOS	F	-	-	B	-
HCM 95th %tile Q(veh)	2.1	-	-	0.3	-

Movement	EBL	EBT	EBR	WBL	WBT	WBR	NBL	NBT	NBR	SBL	SBT	SBR
Lane Configurations												
Volume (veh/h)	187	708	200	130	601	157	103	47	77	253	28	241
Number	5	2	12	1	6	16	3	8	18	7	4	14
Initial Q (Qb), veh	0	0	0	0	0	0	0	0	0	0	0	0
Ped-Bike Adj(A_pbT)	1.00		0.97	1.00		0.98	1.00		0.98	1.00		0.90
Parking Bus, Adj	1.00	1.00	1.00	1.00	1.00	1.00	1.00	1.00	1.00	1.00	1.00	1.00
Adj Sat Flow, veh/h/ln	1863	1863	1900	1863	1863	1863	1863	1863	1900	1863	1863	1863
Adj Flow Rate, veh/h	201	761	215	140	646	169	111	51	83	293	0	259
Adj No. of Lanes	1	2	0	1	2	1	1	1	0	2	0	1
Peak Hour Factor	0.93	0.93	0.93	0.93	0.93	0.93	0.93	0.93	0.93	0.93	0.93	0.93
Percent Heavy Veh, %	2	2	2	2	2	2	2	2	2	2	2	2
Cap, veh/h	231	1441	407	266	1281	927	180	64	104	816	0	328
Arrive On Green	0.13	0.53	0.53	0.36	0.36	0.36	0.10	0.10	0.10	0.23	0.00	0.23
Sat Flow, veh/h	1774	2707	765	573	3539	1557	1774	632	1029	3548	0	1428
Grp Volume(v), veh/h	201	498	478	140	646	169	111	0	134	293	0	259
Grp Sat Flow(s),veh/h/ln	1774	1770	1702	573	1770	1557	1774	0	1661	1774	0	1428
Q Serve(g_s), s	12.2	20.1	20.1	23.1	15.7	5.5	6.6	0.0	8.7	7.6	0.0	18.8
Cycle Q Clear(g_c), s	12.2	20.1	20.1	24.5	15.7	5.5	6.6	0.0	8.7	7.6	0.0	18.8
Prop In Lane	1.00		0.45	1.00		1.00	1.00		0.62	1.00		1.00
Lane Grp Cap(c), veh/h	231	942	906	266	1281	927	180	0	168	816	0	328
V/C Ratio(X)	0.87	0.53	0.53	0.53	0.50	0.18	0.62	0.00	0.80	0.36	0.00	0.79
Avail Cap(c_a), veh/h	284	942	906	266	1281	927	258	0	242	871	0	351
HCM Platoon Ratio	1.00	1.00	1.00	1.00	1.00	1.00	1.00	1.00	1.00	1.00	1.00	1.00
Upstream Filter(I)	1.00	1.00	1.00	1.00	1.00	1.00	1.00	0.00	1.00	1.00	0.00	1.00
Uniform Delay (d), s/veh	46.9	16.7	16.7	30.8	27.4	10.3	47.4	0.0	48.3	35.6	0.0	39.8
Incr Delay (d2), s/veh	19.6	2.1	2.2	2.2	0.4	0.1	3.4	0.0	11.2	0.1	0.0	9.7
Initial Q Delay(d3),s/veh	0.0	0.0	0.0	0.0	0.0	0.0	0.0	0.0	0.0	0.0	0.0	0.0
%ile BackOfQ(50%),veh/ln	7.2	10.4	10.0	3.8	7.7	3.7	3.4	0.0	4.5	3.8	0.0	8.3
LnGrp Delay(d),s/veh	66.5	18.8	18.9	33.0	27.8	10.4	50.8	0.0	59.5	35.7	0.0	49.5
LnGrp LOS	E	B	B	C	C	B	D		E	D		D
Approach Vol, veh/h		1177			955			245			552	
Approach Delay, s/veh		27.0			25.4			55.6			42.1	
Approach LOS		C			C			E			D	

Timer	1	2	3	4	5	6	7	8
Assigned Phs		2		4	5	6		8
Phs Duration (G+Y+Rc), s		64.7		30.2	18.8	45.9		15.1
Change Period (Y+Rc), s		* 6.1		4.9	4.4	6.1		4.0
Max Green Setting (Gmax), s		* 53		27.0	17.6	30.0		16.0
Max Q Clear Time (g_c+I1), s		22.1		20.8	14.2	26.5		10.7
Green Ext Time (p_c), s		19.3		0.7	0.1	3.1		0.5

Intersection Summary	
HCM 2010 Ctrl Delay	31.7
HCM 2010 LOS	C

Notes

User approved volume balancing among the lanes for turning movement.

Intersection	
Int Delay, s/veh	2.8

Movement	EBL	EBT	WBT	WBR	SBL	SBR
Vol, veh/h	64	937	717	18	35	85
Conflicting Peds, #/hr	0	0	0	3	0	0
Sign Control	Free	Free	Free	Free	Stop	Stop
RT Channelized	-	None	-	None	-	None
Storage Length	140	-	-	-	0	-
Veh in Median Storage, #	-	0	0	-	0	-
Grade, %	-	0	0	-	0	-
Peak Hour Factor	87	87	87	87	87	87
Heavy Vehicles, %	2	2	2	2	2	2
Mvmt Flow	74	1077	824	21	40	98

Major/Minor	Major1		Major2		Minor2	
Conflicting Flow All	845	0	-	0	1520	422
Stage 1	-	-	-	-	834	-
Stage 2	-	-	-	-	686	-
Critical Hdwy	4.14	-	-	-	6.84	6.94
Critical Hdwy Stg 1	-	-	-	-	5.84	-
Critical Hdwy Stg 2	-	-	-	-	5.84	-
Follow-up Hdwy	2.22	-	-	-	3.52	3.32
Pot Cap-1 Maneuver	787	-	-	-	109	580
Stage 1	-	-	-	-	387	-
Stage 2	-	-	-	-	461	-
Platoon blocked, %		-	-	-		
Mov Cap-1 Maneuver	787	-	-	-	99	580
Mov Cap-2 Maneuver	-	-	-	-	99	-
Stage 1	-	-	-	-	387	-
Stage 2	-	-	-	-	418	-

Approach	EB	WB	SB
HCM Control Delay, s	0.6	0	38.5
HCM LOS			E

Minor Lane/Major Mvmt	EBL	EBT	WBT	WBR	SBLn1
Capacity (veh/h)	787	-	-	-	240
HCM Lane V/C Ratio	0.093	-	-	-	0.575
HCM Control Delay (s)	10	-	-	-	38.5
HCM Lane LOS	B	-	-	-	E
HCM 95th %tile Q(veh)	0.3	-	-	-	3.2

Movement	EBL	EBT	EBR	WBL	WBT	WBR	NBL	NBT	NBR	SBL	SBT	SBR
Lane Configurations												
Volume (veh/h)	50	679	243	165	592	36	158	43	154	21	17	30
Number	5	2	12	1	6	16	3	8	18	7	4	14
Initial Q (Qb), veh	0	0	0	0	0	0	0	0	0	0	0	0
Ped-Bike Adj(A_pbT)	1.00		0.98	1.00		0.97	1.00		0.97	1.00		1.00
Parking Bus, Adj	1.00	1.00	1.00	1.00	1.00	1.00	1.00	1.00	1.00	1.00	1.00	1.00
Adj Sat Flow, veh/h/ln	1863	1863	1863	1863	1863	1900	1863	1863	1863	1863	1863	1863
Adj Flow Rate, veh/h	55	746	267	181	651	40	174	47	169	23	19	33
Adj No. of Lanes	1	2	1	1	2	0	1	1	1	1	1	1
Peak Hour Factor	0.91	0.91	0.91	0.91	0.91	0.91	0.91	0.91	0.91	0.91	0.91	0.91
Percent Heavy Veh, %	2	2	2	2	2	2	2	2	2	2	2	2
Cap, veh/h	71	1736	762	210	1925	118	203	343	471	33	165	140
Arrive On Green	0.03	0.33	0.33	0.12	0.57	0.57	0.11	0.18	0.18	0.02	0.09	0.09
Sat Flow, veh/h	1774	3539	1554	1774	3382	208	1774	1863	1535	1774	1863	1583
Grp Volume(v), veh/h	55	746	267	181	340	351	174	47	169	23	19	33
Grp Sat Flow(s),veh/h/ln	1774	1770	1554	1774	1770	1820	1774	1863	1535	1774	1863	1583
Q Serve(g_s), s	3.4	18.1	14.3	11.0	11.3	11.3	10.6	2.3	9.5	1.4	1.0	2.1
Cycle Q Clear(g_c), s	3.4	18.1	14.3	11.0	11.3	11.3	10.6	2.3	9.5	1.4	1.0	2.1
Prop In Lane	1.00		1.00	1.00		0.11	1.00		1.00	1.00		1.00
Lane Grp Cap(c), veh/h	71	1736	762	210	1007	1036	203	343	471	33	165	140
V/C Ratio(X)	0.78	0.43	0.35	0.86	0.34	0.34	0.86	0.14	0.36	0.71	0.12	0.24
Avail Cap(c_a), veh/h	144	1736	762	268	1007	1036	219	571	658	90	440	374
HCM Platoon Ratio	0.67	0.67	0.67	1.00	1.00	1.00	1.00	1.00	1.00	1.00	1.00	1.00
Upstream Filter(I)	1.00	1.00	1.00	1.00	1.00	1.00	1.00	1.00	1.00	1.00	1.00	1.00
Uniform Delay (d), s/veh	53.0	24.9	23.6	47.6	12.6	12.6	47.9	37.5	30.0	53.7	46.2	46.7
Incr Delay (d2), s/veh	6.6	0.8	1.3	16.8	0.9	0.9	24.3	0.1	0.2	9.9	0.1	0.3
Initial Q Delay(d3),s/veh	0.0	0.0	0.0	0.0	0.0	0.0	0.0	0.0	0.0	0.0	0.0	0.0
%ile BackOfQ(50%),veh/ln	1.8	9.1	6.4	6.4	5.7	5.9	6.5	1.2	4.0	0.8	0.5	0.9
LnGrp Delay(d),s/veh	59.7	25.7	24.9	64.4	13.6	13.5	72.1	37.6	30.2	63.6	46.3	47.0
LnGrp LOS	E	C	C	E	B	B	E	D	C	E	D	D
Approach Vol, veh/h		1068			872			390			75	
Approach Delay, s/veh		27.2			24.1			49.8			51.9	
Approach LOS		C			C			D			D	

Timer	1	2	3	4	5	6	7	8
Assigned Phs	1	2	3	4	5	6	7	8
Phs Duration (G+Y+Rc), s	17.4	60.7	17.0	14.9	8.8	69.3	6.4	25.5
Change Period (Y+Rc), s	4.4	* 6.7	4.4	* 5.2	4.4	6.7	4.4	5.2
Max Green Setting (Gmax), s	16.6	* 34	13.6	* 26	8.9	41.1	5.6	33.7
Max Q Clear Time (g_c+I1), s	13.0	20.1	12.6	4.1	5.4	13.3	3.4	11.5
Green Ext Time (p_c), s	0.1	6.4	0.0	0.6	0.0	8.6	0.0	0.6

Intersection Summary	
HCM 2010 Ctrl Delay	30.5
HCM 2010 LOS	C

Notes

* HCM 2010 computational engine requires equal clearance times for the phases crossing the barrier.

Movement	EBL	EBT	EBR	WBL	WBT	WBR	NBL	NBT	NBR	SBL	SBT	SBR
Lane Configurations												
Volume (veh/h)	10	14	19	41	21	25	34	675	64	27	686	12
Number	7	4	14	3	8	18	5	2	12	1	6	16
Initial Q (Qb), veh	0	0	0	0	0	0	0	0	0	0	0	0
Ped-Bike Adj(A_pbT)	0.98		0.92	0.93		0.98	1.00		0.96	1.00		0.97
Parking Bus, Adj	1.00	1.00	1.00	1.00	1.00	1.00	1.00	1.00	1.00	1.00	1.00	1.00
Adj Sat Flow, veh/h/ln	1900	1863	1900	1900	1863	1900	1863	1863	1900	1863	1863	1900
Adj Flow Rate, veh/h	10	15	20	43	22	26	35	703	67	28	715	12
Adj No. of Lanes	0	1	0	0	1	0	1	2	0	1	2	0
Peak Hour Factor	0.96	0.96	0.96	0.96	0.96	0.96	0.96	0.96	0.96	0.96	0.96	0.96
Percent Heavy Veh, %	2	2	2	2	2	2	2	2	2	2	2	2
Cap, veh/h	78	109	118	150	78	72	44	2203	210	37	2396	40
Arrive On Green	0.17	0.17	0.17	0.17	0.17	0.17	0.02	0.68	0.68	0.04	1.00	1.00
Sat Flow, veh/h	225	653	702	609	463	429	1774	3254	310	1774	3560	60
Grp Volume(v), veh/h	45	0	0	91	0	0	35	382	388	28	355	372
Grp Sat Flow(s),veh/h/ln	1579	0	0	1501	0	0	1774	1770	1794	1774	1770	1850
Q Serve(g_s), s	0.0	0.0	0.0	3.0	0.0	0.0	2.2	9.8	9.8	1.7	0.0	0.0
Cycle Q Clear(g_c), s	2.6	0.0	0.0	5.5	0.0	0.0	2.2	9.8	9.8	1.7	0.0	0.0
Prop In Lane	0.22		0.44	0.47		0.29	1.00		0.17	1.00		0.03
Lane Grp Cap(c), veh/h	305	0	0	300	0	0	44	1198	1215	37	1191	1245
V/C Ratio(X)	0.15	0.00	0.00	0.30	0.00	0.00	0.79	0.32	0.32	0.75	0.30	0.30
Avail Cap(c_a), veh/h	496	0	0	481	0	0	171	1198	1215	155	1191	1245
HCM Platoon Ratio	1.00	1.00	1.00	1.00	1.00	1.00	1.00	1.00	1.00	2.00	2.00	2.00
Upstream Filter(I)	1.00	0.00	0.00	1.00	0.00	0.00	1.00	1.00	1.00	0.92	0.92	0.92
Uniform Delay (d), s/veh	39.2	0.0	0.0	40.3	0.0	0.0	53.3	7.3	7.3	52.4	0.0	0.0
Incr Delay (d2), s/veh	0.1	0.0	0.0	0.2	0.0	0.0	11.2	0.7	0.7	10.1	0.6	0.6
Initial Q Delay(d3),s/veh	0.0	0.0	0.0	0.0	0.0	0.0	0.0	0.0	0.0	0.0	0.0	0.0
%ile BackOfQ(50%),veh/ln	1.2	0.0	0.0	2.5	0.0	0.0	1.2	5.0	5.1	0.9	0.2	0.2
LnGrp Delay(d),s/veh	39.3	0.0	0.0	40.5	0.0	0.0	64.5	8.0	8.0	62.5	0.6	0.6
LnGrp LOS	D			D			E	A	A	E	A	A
Approach Vol, veh/h		45			91			805			755	
Approach Delay, s/veh		39.3			40.5			10.5			2.9	
Approach LOS		D			D			B			A	

Timer	1	2	3	4	5	6	7	8
Assigned Phs	1	2		4	5	6		8
Phs Duration (G+Y+Rc), s	6.7	80.0		23.3	7.1	79.5		23.3
Change Period (Y+Rc), s	4.4	* 5.5		4.9	4.4	5.5		4.9
Max Green Setting (Gmax), s	9.6	* 54		32.1	10.6	52.5		32.1
Max Q Clear Time (g_c+I1), s	3.7	11.8		4.6	4.2	2.0		7.5
Green Ext Time (p_c), s	0.0	21.8		0.5	0.0	23.8		0.5

Intersection Summary	
HCM 2010 Ctrl Delay	9.5
HCM 2010 LOS	A

Notes

* HCM 2010 computational engine requires equal clearance times for the phases crossing the barrier.

Movement	EBL	EBT	EBR	WBL	WBT	WBR	NBL	NBT	NBR	SBL	SBT	SBR
Lane Configurations												
Volume (veh/h)	93	86	83	62	111	74	106	577	45	119	770	67
Number	7	4	14	3	8	18	5	2	12	1	6	16
Initial Q (Qb), veh	0	0	0	0	0	0	0	0	0	0	0	0
Ped-Bike Adj(A_pbT)	0.99		0.97	0.99		0.97	1.00		0.95	1.00		0.95
Parking Bus, Adj	1.00	1.00	1.00	1.00	1.00	1.00	1.00	1.00	1.00	1.00	1.00	1.00
Adj Sat Flow, veh/h/ln	1863	1863	1900	1863	1863	1900	1863	1863	1900	1863	1863	1900
Adj Flow Rate, veh/h	95	88	85	63	113	76	108	589	46	121	786	68
Adj No. of Lanes	1	1	0	1	1	0	1	2	0	1	2	0
Peak Hour Factor	0.98	0.98	0.98	0.98	0.98	0.98	0.98	0.98	0.98	0.98	0.98	0.98
Percent Heavy Veh, %	2	2	2	2	2	2	2	2	2	2	2	2
Cap, veh/h	227	199	192	238	238	160	133	1827	142	150	1840	159
Arrive On Green	0.23	0.23	0.23	0.23	0.23	0.23	0.15	1.00	1.00	0.03	0.19	0.19
Sat Flow, veh/h	1176	856	827	1191	1025	689	1774	3314	258	1774	3281	284
Grp Volume(v), veh/h	95	0	173	63	0	189	108	314	321	121	424	430
Grp Sat Flow(s),veh/h/ln	1176	0	1683	1191	0	1714	1774	1770	1803	1774	1770	1796
Q Serve(g_s), s	8.3	0.0	9.7	5.3	0.0	10.5	6.5	0.0	0.0	7.5	23.3	23.3
Cycle Q Clear(g_c), s	18.8	0.0	9.7	14.9	0.0	10.5	6.5	0.0	0.0	7.5	23.3	23.3
Prop In Lane	1.00		0.49	1.00		0.40	1.00		0.14	1.00		0.16
Lane Grp Cap(c), veh/h	227	0	391	238	0	398	133	976	994	150	992	1007
V/C Ratio(X)	0.42	0.00	0.44	0.27	0.00	0.47	0.81	0.32	0.32	0.81	0.43	0.43
Avail Cap(c_a), veh/h	318	0	522	330	0	531	268	976	994	219	992	1007
HCM Platoon Ratio	1.00	1.00	1.00	1.00	1.00	1.00	2.00	2.00	2.00	0.33	0.33	0.33
Upstream Filter(I)	1.00	0.00	1.00	1.00	0.00	1.00	0.97	0.97	0.97	0.92	0.92	0.92
Uniform Delay (d), s/veh	44.5	0.0	36.1	42.5	0.0	36.4	46.0	0.0	0.0	52.6	29.2	29.2
Incr Delay (d2), s/veh	0.5	0.0	0.3	0.2	0.0	0.3	4.3	0.8	0.8	7.5	1.2	1.2
Initial Q Delay(d3),s/veh	0.0	0.0	0.0	0.0	0.0	0.0	0.0	0.0	0.0	0.0	0.0	0.0
%ile BackOfQ(50%),veh/ln	2.7	0.0	4.5	1.7	0.0	5.0	3.3	0.2	0.2	4.0	11.8	12.0
LnGrp Delay(d),s/veh	45.0	0.0	36.4	42.7	0.0	36.7	50.3	0.8	0.8	60.1	30.4	30.4
LnGrp LOS	D		D	D		D	D	A	A	E	C	C
Approach Vol, veh/h		268			252			743			975	
Approach Delay, s/veh		39.4			38.2			8.0			34.1	
Approach LOS		D			D			A			C	

Timer	1	2	3	4	5	6	7	8
Assigned Phs	1	2		4	5	6		8
Phs Duration (G+Y+Rc), s	13.7	65.9		30.5	12.6	66.9		30.5
Change Period (Y+Rc), s	4.4	5.2		4.9	4.4	* 5.2		4.9
Max Green Setting (Gmax), s	13.6	47.8		34.1	16.6	* 45		34.1
Max Q Clear Time (g_c+I1), s	10.5	2.0		20.8	8.5	25.3		16.9
Green Ext Time (p_c), s	0.1	15.4		1.5	0.1	10.6		1.7

Intersection Summary	
HCM 2010 Ctrl Delay	26.6
HCM 2010 LOS	C

Notes

* HCM 2010 computational engine requires equal clearance times for the phases crossing the barrier.

Movement	EBL	EBT	EBR	WBL	WBT	WBR	NBL	NBT	NBR	SBL	SBT	SBR
Lane Configurations												
Volume (veh/h)	80	135	46	36	112	168	69	683	51	342	821	64
Number	7	4	14	3	8	18	5	2	12	1	6	16
Initial Q (Qb), veh	0	0	0	0	0	0	0	0	0	0	0	0
Ped-Bike Adj(A_pbT)	0.95		0.97	0.99		0.90	1.00		0.97	1.00		0.97
Parking Bus, Adj	1.00	1.00	1.00	1.00	1.00	1.00	1.00	1.00	1.00	1.00	1.00	1.00
Adj Sat Flow, veh/h/ln	1863	1863	1900	1863	1863	1863	1863	1863	1900	1863	1863	1900
Adj Flow Rate, veh/h	86	145	49	39	120	181	74	734	55	368	883	69
Adj No. of Lanes	1	1	0	1	1	1	1	2	0	1	2	0
Peak Hour Factor	0.93	0.93	0.93	0.93	0.93	0.93	0.93	0.93	0.93	0.93	0.93	0.93
Percent Heavy Veh, %	2	2	2	2	2	2	2	2	2	2	2	2
Cap, veh/h	242	299	101	219	421	323	95	1494	112	348	1963	153
Arrive On Green	0.23	0.23	0.23	0.23	0.23	0.23	0.04	0.30	0.30	0.20	0.59	0.59
Sat Flow, veh/h	1021	1322	447	1174	1863	1431	1774	3329	249	1774	3319	259
Grp Volume(v), veh/h	86	0	194	39	120	181	74	390	399	368	471	481
Grp Sat Flow(s),veh/h/ln	1021	0	1769	1174	1863	1431	1774	1770	1808	1774	1770	1808
Q Serve(g_s), s	8.4	0.0	10.5	3.3	5.9	12.3	4.6	19.9	19.9	21.6	16.3	16.3
Cycle Q Clear(g_c), s	14.2	0.0	10.5	13.8	5.9	12.3	4.6	19.9	19.9	21.6	16.3	16.3
Prop In Lane	1.00		0.25	1.00		1.00	1.00		0.14	1.00		0.14
Lane Grp Cap(c), veh/h	242	0	399	219	421	323	95	794	811	348	1047	1070
V/C Ratio(X)	0.36	0.00	0.49	0.18	0.29	0.56	0.78	0.49	0.49	1.06	0.45	0.45
Avail Cap(c_a), veh/h	272	0	452	253	476	366	165	794	811	348	1047	1070
HCM Platoon Ratio	1.00	1.00	1.00	1.00	1.00	1.00	0.67	0.67	0.67	1.00	1.00	1.00
Upstream Filter(I)	1.00	0.00	1.00	1.00	1.00	1.00	0.94	0.94	0.94	0.09	0.09	0.09
Uniform Delay (d), s/veh	41.1	0.0	37.0	43.0	35.2	37.7	52.4	28.2	28.2	44.2	12.5	12.5
Incr Delay (d2), s/veh	0.3	0.0	0.3	0.1	0.1	0.6	4.8	2.0	2.0	32.2	0.1	0.1
Initial Q Delay(d3),s/veh	0.0	0.0	0.0	0.0	0.0	0.0	0.0	0.0	0.0	0.0	0.0	0.0
%ile BackOfQ(50%),veh/ln	2.4	0.0	5.2	1.1	3.0	4.9	2.4	10.2	10.4	13.7	7.9	8.1
LnGrp Delay(d),s/veh	41.5	0.0	37.4	43.2	35.4	38.3	57.2	30.2	30.2	76.4	12.6	12.6
LnGrp LOS	D		D	D	D	D	E	C	C	F	B	B
Approach Vol, veh/h		280			340			863			1320	
Approach Delay, s/veh		38.6			37.8			32.5			30.4	
Approach LOS		D			D			C			C	

Timer	1	2	3	4	5	6	7	8
Assigned Phs	1	2		4	5	6		8
Phs Duration (G+Y+Rc), s	26.0	54.3		29.7	10.3	70.0		29.7
Change Period (Y+Rc), s	4.4	4.9		4.9	4.4	4.9		4.9
Max Green Setting (Gmax), s	21.6	46.1		28.1	10.2	57.5		28.1
Max Q Clear Time (g_c+I1), s	23.6	21.9		16.2	6.6	18.3		15.8
Green Ext Time (p_c), s	0.0	21.4		1.6	0.0	32.7		1.6

Intersection Summary	
HCM 2010 Ctrl Delay	32.8
HCM 2010 LOS	C

Movement	EBL	EBT	EBR	WBL	WBT	WBR	NBL	NBT	NBR	SBL	SBT	SBR
Lane Configurations												
Volume (veh/h)	91	379	331	557	518	127	205	455	426	109	608	112
Number	5	2	12	1	6	16	3	8	18	7	4	14
Initial Q (Qb), veh	0	0	0	0	0	0	0	0	0	0	0	0
Ped-Bike Adj(A_pbT)	1.00		0.97	1.00		0.98	1.00		0.96	1.00		0.89
Parking Bus, Adj	1.00	1.00	1.00	1.00	1.00	1.00	1.00	1.00	1.00	1.00	1.00	1.00
Adj Sat Flow, veh/h/ln	1863	1863	1863	1863	1863	1863	1863	1863	1863	1863	1863	1900
Adj Flow Rate, veh/h	96	399	348	586	545	134	216	479	448	115	640	118
Adj No. of Lanes	1	2	1	2	2	1	1	2	1	2	2	0
Peak Hour Factor	0.95	0.95	0.95	0.95	0.95	0.95	0.95	0.95	0.95	0.95	0.95	0.95
Percent Heavy Veh, %	2	2	2	2	2	2	2	2	2	2	2	2
Cap, veh/h	119	977	425	433	1184	520	242	1396	602	166	893	164
Arrive On Green	0.07	0.28	0.28	0.13	0.33	0.33	0.14	0.39	0.39	0.05	0.31	0.31
Sat Flow, veh/h	1774	3539	1542	3442	3539	1555	1774	3539	1525	3442	2919	537
Grp Volume(v), veh/h	96	399	348	586	545	134	216	479	448	115	387	371
Grp Sat Flow(s),veh/h/ln	1774	1770	1542	1721	1770	1555	1774	1770	1525	1721	1770	1686
Q Serve(g_s), s	6.6	11.4	26.2	15.6	15.0	7.8	14.8	11.8	31.2	4.1	24.1	24.3
Cycle Q Clear(g_c), s	6.6	11.4	26.2	15.6	15.0	7.8	14.8	11.8	31.2	4.1	24.1	24.3
Prop In Lane	1.00		1.00	1.00		1.00	1.00		1.00	1.00		0.32
Lane Grp Cap(c), veh/h	119	977	425	433	1184	520	242	1396	602	166	541	516
V/C Ratio(X)	0.81	0.41	0.82	1.35	0.46	0.26	0.89	0.34	0.74	0.69	0.72	0.72
Avail Cap(c_a), veh/h	166	977	425	433	1184	520	295	1396	602	197	541	516
HCM Platoon Ratio	1.00	1.00	1.00	1.00	1.00	1.00	1.00	1.00	1.00	1.00	1.00	1.00
Upstream Filter(I)	1.00	1.00	1.00	1.00	1.00	1.00	0.86	0.86	0.86	1.00	1.00	1.00
Uniform Delay (d), s/veh	57.0	36.6	42.0	54.2	32.4	30.0	52.6	26.3	32.2	58.1	38.2	38.3
Incr Delay (d2), s/veh	12.3	1.3	15.9	173.6	1.3	1.2	19.1	0.6	7.1	5.5	7.9	8.4
Initial Q Delay(d3),s/veh	0.0	0.0	0.0	0.0	0.0	0.0	0.0	0.0	0.0	0.0	0.0	0.0
%ile BackOfQ(50%),veh/ln	3.7	5.8	13.0	17.8	7.6	3.5	8.5	5.8	14.3	2.1	12.9	12.5
LnGrp Delay(d),s/veh	69.4	37.9	57.9	227.8	33.7	31.2	71.7	26.9	39.3	63.6	46.1	46.6
LnGrp LOS	E	D	E	F	C	C	E	C	D	E	D	D
Approach Vol, veh/h		843			1265			1143			873	
Approach Delay, s/veh		49.7			123.4			40.2			48.6	
Approach LOS		D			F			D			D	

Timer	1	2	3	4	5	6	7	8
Assigned Phs	1	2	3	4	5	6	7	8
Phs Duration (G+Y+Rc), s	20.0	39.5	21.3	43.1	12.7	46.8	10.4	54.1
Change Period (Y+Rc), s	4.4	5.3	4.4	5.2	4.4	5.3	4.4	* 5.2
Max Green Setting (Gmax), s	15.6	33.4	20.6	35.1	11.6	37.4	7.1	* 49
Max Q Clear Time (g_c+I1), s	17.6	28.2	16.8	26.3	8.6	17.0	6.1	33.2
Green Ext Time (p_c), s	0.0	4.1	0.1	7.4	0.0	12.3	0.0	12.2

Intersection Summary	
HCM 2010 Ctrl Delay	69.5
HCM 2010 LOS	E

Notes

* HCM 2010 computational engine requires equal clearance times for the phases crossing the barrier.

Movement	WBL	WBR	NBT	NBR	SBL	SBT
Lane Configurations						
Volume (veh/h)	502	132	1214	683	354	1223
Number	3	18	2	12	1	6
Initial Q (Qb), veh	0	0	0	0	0	0
Ped-Bike Adj(A_pbT)	1.00	1.00		0.98	1.00	
Parking Bus, Adj	1.00	1.00	1.00	1.00	1.00	1.00
Adj Sat Flow, veh/h/ln	1863	1863	1863	1863	1863	1863
Adj Flow Rate, veh/h	523	138	1265	711	369	1274
Adj No. of Lanes	2	1	2	1	2	2
Peak Hour Factor	0.96	0.96	0.96	0.96	0.96	0.96
Percent Heavy Veh, %	2	2	2	2	2	2
Cap, veh/h	627	280	1798	1065	448	2430
Arrive On Green	0.18	0.18	0.51	0.51	0.13	0.69
Sat Flow, veh/h	3548	1583	3632	1546	3442	3632
Grp Volume(v), veh/h	523	138	1265	711	369	1274
Grp Sat Flow(s),veh/h/ln	1774	1583	1770	1546	1721	1770
Q Serve(g_s), s	12.9	7.1	24.9	24.4	9.5	16.0
Cycle Q Clear(g_c), s	12.9	7.1	24.9	24.4	9.5	16.0
Prop In Lane	1.00	1.00		1.00	1.00	
Lane Grp Cap(c), veh/h	627	280	1798	1065	448	2430
V/C Ratio(X)	0.83	0.49	0.70	0.67	0.82	0.52
Avail Cap(c_a), veh/h	1059	472	1798	1065	606	2583
HCM Platoon Ratio	1.00	1.00	1.00	1.00	1.00	1.00
Upstream Filter(I)	1.00	1.00	1.00	1.00	1.00	1.00
Uniform Delay (d), s/veh	36.1	33.7	17.1	8.4	38.5	7.0
Incr Delay (d2), s/veh	1.1	0.5	1.4	1.8	4.9	0.4
Initial Q Delay(d3),s/veh	0.0	0.0	0.0	0.0	0.0	0.0
%ile BackOfQ(50%),veh/ln	6.4	3.2	12.5	16.5	4.8	7.7
LnGrp Delay(d),s/veh	37.2	34.2	18.5	10.2	43.4	7.4
LnGrp LOS	D	C	B	B	D	A
Approach Vol, veh/h	661		1976			1643
Approach Delay, s/veh	36.6		15.5			15.5
Approach LOS	D		B			B

Timer	1	2	3	4	5	6	7	8
Assigned Phs	1	2				6		8
Phs Duration (G+Y+Rc), s	16.2	52.3				68.6		22.3
Change Period (Y+Rc), s	4.4	6.2				* 6.2		6.2
Max Green Setting (Gmax), s	15.6	45.1				* 66		27.1
Max Q Clear Time (g_c+I1), s	11.5	26.9				18.0		14.9
Green Ext Time (p_c), s	0.3	17.9				44.4		1.1

Intersection Summary	
HCM 2010 Ctrl Delay	18.7
HCM 2010 LOS	B

Notes

User approved volume balancing among the lanes for turning movement.

Movement	EBL	EBT	WBT	WBR	SBL	SBR
Lane Configurations						
Volume (veh/h)	153	681	355	291	221	228
Number	5	2	6	16	7	14
Initial Q (Qb), veh	0	0	0	0	0	0
Ped-Bike Adj(A_pbT)	1.00			1.00	1.00	1.00
Parking Bus, Adj	1.00	1.00	1.00	1.00	1.00	1.00
Adj Sat Flow, veh/h/ln	1863	1863	1863	1863	1863	1863
Adj Flow Rate, veh/h	161	717	374	306	310	158
Adj No. of Lanes	1	2	2	1	2	1
Peak Hour Factor	0.95	0.95	0.95	0.95	0.95	0.95
Percent Heavy Veh, %	2	2	2	2	2	2
Cap, veh/h	207	2208	1521	973	656	293
Arrive On Green	0.12	0.62	0.43	0.43	0.18	0.18
Sat Flow, veh/h	1774	3632	3632	1583	3548	1583
Grp Volume(v), veh/h	161	717	374	306	310	158
Grp Sat Flow(s),veh/h/ln	1774	1770	1770	1583	1774	1583
Q Serve(g_s), s	5.0	5.4	3.8	5.3	4.4	5.1
Cycle Q Clear(g_c), s	5.0	5.4	3.8	5.3	4.4	5.1
Prop In Lane	1.00			1.00	1.00	1.00
Lane Grp Cap(c), veh/h	207	2208	1521	973	656	293
V/C Ratio(X)	0.78	0.32	0.25	0.31	0.47	0.54
Avail Cap(c_a), veh/h	922	4597	2510	1415	1563	698
HCM Platoon Ratio	1.00	1.00	1.00	1.00	1.00	1.00
Upstream Filter(I)	1.00	1.00	1.00	1.00	1.00	1.00
Uniform Delay (d), s/veh	24.4	5.1	10.4	5.2	20.7	21.0
Incr Delay (d2), s/veh	2.4	0.2	0.1	0.3	1.1	3.3
Initial Q Delay(d3),s/veh	0.0	0.0	0.0	0.0	0.0	0.0
%ile BackOfQ(50%),veh/ln	2.6	2.6	1.9	3.5	2.3	4.8
LnGrp Delay(d),s/veh	26.8	5.2	10.5	5.5	21.9	24.3
LnGrp LOS	C	A	B	A	C	C
Approach Vol, veh/h		878	680		468	
Approach Delay, s/veh		9.2	8.3		22.7	
Approach LOS		A	A		C	

Timer	1	2	3	4	5	6	7	8
Assigned Phs		2		4	5	6		
Phs Duration (G+Y+Rc), s		41.5		15.4	11.1	30.5		
Change Period (Y+Rc), s		6.0		4.9	4.4	* 6		
Max Green Setting (Gmax), s		74.0		25.1	29.6	* 40		
Max Q Clear Time (g_c+I1), s		7.4		7.1	7.0	7.3		
Green Ext Time (p_c), s		22.7		3.4	0.2	17.2		

Intersection Summary	
HCM 2010 Ctrl Delay	12.0
HCM 2010 LOS	B

Notes

User approved volume balancing among the lanes for turning movement.

Movement	EBL	EBT	EBR	WBL	WBT	WBR	NBL	NBT	NBR	SBL	SBT	SBR
Lane Configurations												
Volume (veh/h)	68	939	35	38	530	56	24	4	24	113	7	57
Number	5	2	12	1	6	16	3	8	18	7	4	14
Initial Q (Qb), veh	0	0	0	0	0	0	0	0	0	0	0	0
Ped-Bike Adj(A_pbT)	1.00		1.00	1.00		1.00	1.00		1.00	1.00		1.00
Parking Bus, Adj	1.00	1.00	1.00	1.00	1.00	1.00	1.00	1.00	1.00	1.00	1.00	1.00
Adj Sat Flow, veh/h/ln	1863	1863	1900	1863	1863	1900	1900	1863	1863	1863	1863	1900
Adj Flow Rate, veh/h	72	999	37	40	564	60	26	4	26	120	7	61
Adj No. of Lanes	1	2	0	1	2	0	0	1	1	1	1	0
Peak Hour Factor	0.94	0.94	0.94	0.94	0.94	0.94	0.94	0.94	0.94	0.94	0.94	0.94
Percent Heavy Veh, %	2	2	2	2	2	2	2	2	2	2	2	2
Cap, veh/h	93	2097	78	53	1874	199	245	32	266	255	28	242
Arrive On Green	0.05	0.60	0.60	0.03	0.58	0.58	0.17	0.17	0.17	0.17	0.17	0.17
Sat Flow, veh/h	1774	3481	129	1774	3229	343	936	189	1583	1374	166	1443
Grp Volume(v), veh/h	72	508	528	40	308	316	30	0	26	120	0	68
Grp Sat Flow(s),veh/h/ln	1774	1770	1840	1774	1770	1802	1125	0	1583	1374	0	1608
Q Serve(g_s), s	3.1	12.3	12.3	1.7	6.8	6.8	1.1	0.0	1.1	6.5	0.0	2.8
Cycle Q Clear(g_c), s	3.1	12.3	12.3	1.7	6.8	6.8	3.9	0.0	1.1	10.3	0.0	2.8
Prop In Lane	1.00		0.07	1.00		0.19	0.87		1.00	1.00		0.90
Lane Grp Cap(c), veh/h	93	1066	1109	53	1027	1046	277	0	266	255	0	270
V/C Ratio(X)	0.78	0.48	0.48	0.75	0.30	0.30	0.11	0.00	0.10	0.47	0.00	0.25
Avail Cap(c_a), veh/h	245	1254	1304	176	1178	1200	641	0	684	618	0	695
HCM Platoon Ratio	1.00	1.00	1.00	1.00	1.00	1.00	1.00	1.00	1.00	1.00	1.00	1.00
Upstream Filter(I)	1.00	1.00	1.00	1.00	1.00	1.00	1.00	0.00	1.00	1.00	0.00	1.00
Uniform Delay (d), s/veh	35.9	8.5	8.5	36.9	8.2	8.2	28.6	0.0	27.0	32.7	0.0	27.7
Incr Delay (d2), s/veh	5.2	1.3	1.2	7.8	0.7	0.7	0.1	0.0	0.1	0.5	0.0	0.2
Initial Q Delay(d3),s/veh	0.0	0.0	0.0	0.0	0.0	0.0	0.0	0.0	0.0	0.0	0.0	0.0
%ile BackOfQ(50%),veh/ln	1.6	6.3	6.5	0.9	3.5	3.5	0.6	0.0	0.5	2.5	0.0	1.3
LnGrp Delay(d),s/veh	41.1	9.8	9.7	44.6	8.9	8.9	28.6	0.0	27.0	33.2	0.0	27.9
LnGrp LOS	D	A	A	D	A	A	C		C	C		C
Approach Vol, veh/h		1108			664			56			188	
Approach Delay, s/veh		11.8			11.1			27.9			31.3	
Approach LOS		B			B			C			C	

Timer	1	2	3	4	5	6	7	8
Assigned Phs	1	2		4	5	6		8
Phs Duration (G+Y+Rc), s	6.7	52.2		17.7	8.4	50.5		17.7
Change Period (Y+Rc), s	4.4	* 6		4.9	4.4	6.0		4.9
Max Green Setting (Gmax), s	7.6	* 54		33.1	10.6	51.0		33.1
Max Q Clear Time (g_c+I1), s	3.7	14.3		12.3	5.1	8.8		5.9
Green Ext Time (p_c), s	0.0	31.9		0.5	0.0	33.3		0.6

Intersection Summary	
HCM 2010 Ctrl Delay	13.8
HCM 2010 LOS	B

Notes

* HCM 2010 computational engine requires equal clearance times for the phases crossing the barrier.

Movement	EBL	EBT	WBT	WBR	SBL	SBR
Lane Configurations						
Volume (veh/h)	142	1042	666	294	400	107
Number	5	2	6	16	7	14
Initial Q (Qb), veh	0	0	0	0	0	0
Ped-Bike Adj(A_pbT)	1.00			0.97	1.00	1.00
Parking Bus, Adj	1.00	1.00	1.00	1.00	1.00	1.00
Adj Sat Flow, veh/h/ln	1863	1863	1863	1863	1863	1863
Adj Flow Rate, veh/h	148	1085	694	306	417	111
Adj No. of Lanes	1	2	2	1	1	1
Peak Hour Factor	0.96	0.96	0.96	0.96	0.96	0.96
Percent Heavy Veh, %	2	2	2	2	2	2
Cap, veh/h	207	1945	1269	552	501	447
Arrive On Green	0.12	0.55	0.36	0.36	0.28	0.28
Sat Flow, veh/h	1774	3632	3632	1539	1774	1583
Grp Volume(v), veh/h	148	1085	694	306	417	111
Grp Sat Flow(s),veh/h/ln	1774	1770	1770	1539	1774	1583
Q Serve(g_s), s	4.7	11.7	9.2	9.4	13.0	3.2
Cycle Q Clear(g_c), s	4.7	11.7	9.2	9.4	13.0	3.2
Prop In Lane	1.00			1.00	1.00	1.00
Lane Grp Cap(c), veh/h	207	1945	1269	552	501	447
V/C Ratio(X)	0.72	0.56	0.55	0.55	0.83	0.25
Avail Cap(c_a), veh/h	529	3258	1926	837	1083	966
HCM Platoon Ratio	1.00	1.00	1.00	1.00	1.00	1.00
Upstream Filter(I)	1.00	1.00	1.00	1.00	1.00	1.00
Uniform Delay (d), s/veh	25.1	8.6	15.1	15.1	19.8	16.3
Incr Delay (d2), s/veh	1.7	0.2	0.1	0.3	3.7	0.3
Initial Q Delay(d3),s/veh	0.0	0.0	0.0	0.0	0.0	0.0
%ile BackOfQ(50%),veh/ln	2.4	5.6	4.5	8.2	6.9	3.1
LnGrp Delay(d),s/veh	26.9	8.8	15.2	15.5	23.5	16.6
LnGrp LOS	C	A	B	B	C	B
Approach Vol, veh/h		1233	1000		528	
Approach Delay, s/veh		11.0	15.3		22.1	
Approach LOS		B	B		C	

Timer	1	2	3	4	5	6	7	8
Assigned Phs		2		4	5	6		
Phs Duration (G+Y+Rc), s		38.3		20.7	11.3	27.1		
Change Period (Y+Rc), s		* 5.9		4.0	4.4	5.9		
Max Green Setting (Gmax), s		* 54		36.0	17.6	32.1		
Max Q Clear Time (g_c+I1), s		13.7		15.0	6.7	11.4		
Green Ext Time (p_c), s		12.1		1.7	0.1	9.6		

Intersection Summary	
HCM 2010 Ctrl Delay	14.7
HCM 2010 LOS	B

Notes

* HCM 2010 computational engine requires equal clearance times for the phases crossing the barrier.

Movement	EBL	EBT	EBR	WBL	WBT	WBR	NBL	NBT	NBR	SBL	SBT	SBR
Lane Configurations												
Volume (veh/h)	5	1498	267	156	587	10	262	4	319	11	4	0
Number	5	2	12	1	6	16	3	8	18	7	4	14
Initial Q (Qb), veh	0	0	0	0	0	0	0	0	0	0	0	0
Ped-Bike Adj(A_pbT)	1.00		0.99	1.00		0.97	1.00		0.98	1.00		1.00
Parking Bus, Adj	1.00	1.00	1.00	1.00	1.00	1.00	1.00	1.00	1.00	1.00	1.00	1.00
Adj Sat Flow, veh/h/ln	1863	1863	1900	1863	1863	1900	1900	1863	1863	1900	1863	1900
Adj Flow Rate, veh/h	5	1628	290	170	638	11	285	4	347	12	4	0
Adj No. of Lanes	1	3	0	2	2	0	0	1	1	0	1	0
Peak Hour Factor	0.92	0.92	0.92	0.92	0.92	0.92	0.92	0.92	0.92	0.92	0.92	0.92
Percent Heavy Veh, %	2	2	2	2	2	2	2	2	2	2	2	2
Cap, veh/h	9	2555	452	220	2305	40	378	5	467	78	20	0
Arrive On Green	0.01	0.59	0.59	0.13	1.00	1.00	0.24	0.24	0.24	0.24	0.24	0.00
Sat Flow, veh/h	1774	4338	768	3442	3558	61	1382	19	1553	134	83	0
Grp Volume(v), veh/h	5	1270	648	170	317	332	289	0	347	16	0	0
Grp Sat Flow(s),veh/h/ln	1774	1695	1716	1721	1770	1849	1401	0	1553	217	0	0
Q Serve(g_s), s	0.4	33.5	33.9	6.5	0.0	0.0	0.0	0.0	27.4	0.8	0.0	0.0
Cycle Q Clear(g_c), s	0.4	33.5	33.9	6.5	0.0	0.0	27.1	0.0	27.4	27.8	0.0	0.0
Prop In Lane	1.00		0.45	1.00		0.03	0.99		1.00	0.75		0.00
Lane Grp Cap(c), veh/h	9	1997	1011	220	1146	1198	382	0	467	97	0	0
V/C Ratio(X)	0.56	0.64	0.64	0.77	0.28	0.28	0.76	0.00	0.74	0.16	0.00	0.00
Avail Cap(c_a), veh/h	53	1997	1011	547	1146	1198	499	0	596	193	0	0
HCM Platoon Ratio	1.00	1.00	1.00	2.00	2.00	2.00	1.00	1.00	1.00	1.00	1.00	1.00
Upstream Filter(I)	0.74	0.74	0.74	0.94	0.94	0.94	1.00	0.00	1.00	1.00	0.00	0.00
Uniform Delay (d), s/veh	67.5	18.4	18.5	58.3	0.0	0.0	50.1	0.0	43.0	48.0	0.0	0.0
Incr Delay (d2), s/veh	13.9	1.2	2.3	2.1	0.6	0.5	3.6	0.0	2.8	0.4	0.0	0.0
Initial Q Delay(d3),s/veh	0.0	0.0	0.0	0.0	0.0	0.0	0.0	0.0	0.0	0.0	0.0	0.0
%ile BackOfQ(50%),veh/ln	0.2	15.8	16.7	3.1	0.2	0.2	10.8	0.0	12.2	0.6	0.0	0.0
LnGrp Delay(d),s/veh	81.4	19.5	20.8	60.4	0.6	0.5	53.7	0.0	45.8	48.5	0.0	0.0
LnGrp LOS	F	B	C	E	A	A	D		D	D		
Approach Vol, veh/h		1923			819			636			16	
Approach Delay, s/veh		20.1			13.0			49.4			48.5	
Approach LOS		C			B			D			D	

Timer	1	2	3	4	5	6	7	8
Assigned Phs	1	2		4	5	6		8
Phs Duration (G+Y+Rc), s	13.1	86.0		36.9	5.1	94.0		36.9
Change Period (Y+Rc), s	4.4	5.9		4.9	4.4	* 5.9		4.9
Max Green Setting (Gmax), s	21.6	55.9		43.3	4.1	* 74		43.3
Max Q Clear Time (g_c+I1), s	8.5	35.9		29.8	2.4	2.0		29.4
Green Ext Time (p_c), s	0.2	15.9		1.8	0.0	37.2		1.9

Intersection Summary	
HCM 2010 Ctrl Delay	24.0
HCM 2010 LOS	C

Notes

* HCM 2010 computational engine requires equal clearance times for the phases crossing the barrier.

Movement	EBL	EBT	EBR	WBL	WBT	WBR	NBL	NBT	NBR	SBL	SBT	SBR
Lane Configurations												
Volume (veh/h)	4	1760	68	216	919	0	59	0	275	0	0	0
Number	5	2	12	1	6	16	3	8	18			
Initial Q (Qb), veh	0	0	0	0	0	0	0	0	0			
Ped-Bike Adj(A_pbT)	1.00		1.00	1.00		1.00	1.00		1.00			
Parking Bus, Adj	1.00	1.00	1.00	1.00	1.00	1.00	1.00	1.00	1.00			
Adj Sat Flow, veh/h/ln	1863	1863	1900	1863	1863	0	1863	0	1863			
Adj Flow Rate, veh/h	4	1872	72	230	978	0	63	0	293			
Adj No. of Lanes	1	3	0	2	2	0	1	0	1			
Peak Hour Factor	0.92	0.94	0.94	0.94	0.94	0.92	0.94	0.92	0.94			
Percent Heavy Veh, %	2	2	2	2	2	0	2	0	2			
Cap, veh/h	7	3087	119	282	2460	0	354	0	316			
Arrive On Green	0.01	1.00	1.00	0.08	0.69	0.00	0.20	0.00	0.20			
Sat Flow, veh/h	1774	5025	193	3442	3632	0	1774	0	1583			
Grp Volume(v), veh/h	4	1262	682	230	978	0	63	0	293			
Grp Sat Flow(s),veh/h/ln	1774	1695	1828	1721	1770	0	1774	0	1583			
Q Serve(g_s), s	0.3	0.0	0.0	8.9	15.8	0.0	4.0	0.0	24.7			
Cycle Q Clear(g_c), s	0.3	0.0	0.0	8.9	15.8	0.0	4.0	0.0	24.7			
Prop In Lane	1.00		0.11	1.00		0.00	1.00		1.00			
Lane Grp Cap(c), veh/h	7	2083	1123	282	2460	0	354	0	316			
V/C Ratio(X)	0.55	0.61	0.61	0.82	0.40	0.00	0.18	0.00	0.93			
Avail Cap(c_a), veh/h	52	2083	1123	420	2460	0	438	0	391			
HCM Platoon Ratio	2.00	2.00	2.00	1.00	1.00	1.00	1.00	1.00	1.00			
Upstream Filter(I)	0.67	0.67	0.67	1.00	1.00	0.00	1.00	0.00	1.00			
Uniform Delay (d), s/veh	67.3	0.0	0.0	61.4	8.7	0.0	45.2	0.0	53.5			
Incr Delay (d2), s/veh	36.4	0.9	1.6	4.5	0.5	0.0	0.1	0.0	23.1			
Initial Q Delay(d3),s/veh	0.0	0.0	0.0	0.0	0.0	0.0	0.0	0.0	0.0			
%ile BackOfQ(50%),veh/ln	0.2	0.3	0.5	4.4	7.8	0.0	2.0	0.0	12.8			
LnGrp Delay(d),s/veh	103.7	0.9	1.6	65.9	9.2	0.0	45.3	0.0	76.6			
LnGrp LOS	F	A	A	E	A		D		E			
Approach Vol, veh/h		1948			1208			356				
Approach Delay, s/veh		1.4			20.0			71.0				
Approach LOS		A			C			E				

Timer	1	2	3	4	5	6	7	8
Assigned Phs	1	2			5	6		8
Phs Duration (G+Y+Rc), s	15.5	88.9			4.6	99.9		31.5
Change Period (Y+Rc), s	4.4	5.4			4.0	* 5.4		4.4
Max Green Setting (Gmax), s	15.6	71.6			4.0	* 85		33.6
Max Q Clear Time (g_c+I1), s	10.9	2.0			2.3	17.8		26.7
Green Ext Time (p_c), s	0.2	53.3			0.0	51.7		0.4

Intersection Summary	
HCM 2010 Ctrl Delay	14.8
HCM 2010 LOS	B

Notes

* HCM 2010 computational engine requires equal clearance times for the phases crossing the barrier.

Movement	EBL	EBT	EBR	WBL	WBT	WBR	NBL	NBT	NBR	SBL	SBT	SBR
Lane Configurations												
Volume (veh/h)	10	1942	80	606	1162	17	43	1	114	18	1	2
Number	5	2	12	1	6	16	3	8	18	7	4	14
Initial Q (Qb), veh	0	0	0	0	0	0	0	0	0	0	0	0
Ped-Bike Adj(A_pbT)	1.00		1.00	1.00		1.00	0.98		1.00	1.00		0.98
Parking Bus, Adj	1.00	1.00	1.00	1.00	1.00	1.00	1.00	1.00	1.00	1.00	1.00	1.00
Adj Sat Flow, veh/h/ln	1863	1863	1900	1863	1863	1900	1863	1863	1863	1863	1863	1900
Adj Flow Rate, veh/h	10	2023	83	631	1210	18	45	0	120	19	1	2
Adj No. of Lanes	1	3	0	2	3	0	1	0	2	1	1	0
Peak Hour Factor	0.96	0.96	0.96	0.96	0.96	0.96	0.96	0.96	0.96	0.96	0.96	0.96
Percent Heavy Veh, %	2	2	2	2	2	2	2	2	2	2	2	2
Cap, veh/h	16	3215	132	675	4276	64	126	0	172	122	30	60
Arrive On Green	0.01	0.64	0.64	0.39	1.00	1.00	0.05	0.00	0.05	0.05	0.05	0.05
Sat Flow, veh/h	1774	5012	205	3442	5162	77	1385	0	3167	1266	549	1098
Grp Volume(v), veh/h	10	1367	739	631	795	433	45	0	120	19	0	3
Grp Sat Flow(s),veh/h/ln	1774	1695	1826	1721	1695	1849	1385	0	1583	1266	0	1647
Q Serve(g_s), s	0.8	32.9	33.2	23.9	0.0	0.0	4.3	0.0	5.1	2.0	0.0	0.2
Cycle Q Clear(g_c), s	0.8	32.9	33.2	23.9	0.0	0.0	4.6	0.0	5.1	2.0	0.0	0.2
Prop In Lane	1.00		0.11	1.00		0.04	1.00		1.00	1.00		0.67
Lane Grp Cap(c), veh/h	16	2175	1172	675	2808	1532	126	0	172	122	0	90
V/C Ratio(X)	0.61	0.63	0.63	0.93	0.28	0.28	0.36	0.00	0.70	0.16	0.00	0.03
Avail Cap(c_a), veh/h	125	2175	1172	800	2808	1532	357	0	701	333	0	365
HCM Platoon Ratio	1.00	1.00	1.00	2.00	2.00	2.00	1.00	1.00	1.00	1.00	1.00	1.00
Upstream Filter(I)	1.00	1.00	1.00	0.27	0.27	0.27	1.00	0.00	1.00	1.00	0.00	1.00
Uniform Delay (d), s/veh	67.1	14.6	14.7	40.5	0.0	0.0	63.1	0.0	63.2	61.7	0.0	60.9
Incr Delay (d2), s/veh	12.8	1.4	2.6	5.3	0.1	0.1	0.6	0.0	1.9	0.2	0.0	0.1
Initial Q Delay(d3),s/veh	0.0	0.0	0.0	0.0	0.0	0.0	0.0	0.0	0.0	0.0	0.0	0.0
%ile BackOfQ(50%),veh/ln	0.4	15.8	17.5	11.7	0.0	0.1	1.7	0.0	2.3	0.7	0.0	0.1
LnGrp Delay(d),s/veh	79.9	16.0	17.3	45.8	0.1	0.1	63.7	0.0	65.1	62.0	0.0	61.0
LnGrp LOS	E	B	B	D	A	A	E		E	E		E
Approach Vol, veh/h		2116			1859			165			22	
Approach Delay, s/veh		16.8			15.6			64.7			61.8	
Approach LOS		B			B			E			E	

Timer	1	2	3	4	5	6	7	8
Assigned Phs	1	2		4	5	6		8
Phs Duration (G+Y+Rc), s	31.1	92.6		12.3	5.7	118.0		12.3
Change Period (Y+Rc), s	4.4	5.4		4.9	4.4	* 5.4		4.9
Max Green Setting (Gmax), s	31.6	59.6		30.1	9.6	* 82		30.1
Max Q Clear Time (g_c+I1), s	25.9	35.2		4.0	2.8	2.0		7.1
Green Ext Time (p_c), s	0.7	23.0		0.3	0.0	66.3		0.3

Intersection Summary	
HCM 2010 Ctrl Delay	18.4
HCM 2010 LOS	B

Notes

User approved volume balancing among the lanes for turning movement.

Movement	EBL	EBT	EBR	WBL	WBT	WBR	NBL	NBT	NBR	SBL	SBT	SBR
Lane Configurations												
Volume (veh/h)	100	1461	609	0	1306	554	326	56	830	297	2	153
Number	5	2	12	1	6	16	3	8	18	7	4	14
Initial Q (Qb), veh	0	0	0	0	0	0	0	0	0	0	0	0
Ped-Bike Adj(A_pbT)	1.00		1.00	1.00		1.00	1.00		1.00	1.00		0.98
Parking Bus, Adj	1.00	1.00	1.00	1.00	1.00	1.00	1.00	1.00	1.00	1.00	1.00	1.00
Adj Sat Flow, veh/h/ln	1863	1863	1863	0	1863	1863	1863	1863	1863	1863	1900	1863
Adj Flow Rate, veh/h	104	1522	0	0	1360	577	381	0	0	309	2	159
Adj No. of Lanes	1	3	1	0	3	1	2	0	1	2	0	1
Peak Hour Factor	0.96	0.96	0.96	0.96	0.96	0.96	0.96	0.96	0.96	0.96	0.96	0.96
Percent Heavy Veh, %	2	2	2	0	2	2	2	2	2	2	2	2
Cap, veh/h	192	1978	616	0	1271	396	440	0	197	436	0	197
Arrive On Green	0.04	0.13	0.00	0.00	0.25	0.25	0.12	0.00	0.00	0.13	0.13	0.13
Sat Flow, veh/h	1774	5085	1583	0	5253	1583	3548	0	1583	3442	0	1553
Grp Volume(v), veh/h	104	1522	0	0	1360	577	381	0	0	309	0	159
Grp Sat Flow(s),veh/h/ln	1774	1695	1583	0	1695	1583	1774	0	1583	1721	0	1553
Q Serve(g_s), s	7.8	39.4	0.0	0.0	34.0	34.0	14.3	0.0	0.0	11.7	0.0	13.5
Cycle Q Clear(g_c), s	7.8	39.4	0.0	0.0	34.0	34.0	14.3	0.0	0.0	11.7	0.0	13.5
Prop In Lane	1.00		1.00	0.00		1.00	1.00		1.00	1.00		1.00
Lane Grp Cap(c), veh/h	192	1978	616	0	1271	396	440	0	197	436	0	197
V/C Ratio(X)	0.54	0.77	0.00	0.00	1.07	1.46	0.86	0.00	0.00	0.71	0.00	0.81
Avail Cap(c_a), veh/h	209	2019	629	0	1271	396	532	0	237	1149	0	519
HCM Platoon Ratio	0.33	0.33	0.33	1.00	1.00	1.00	1.00	1.00	1.00	1.00	1.00	1.00
Upstream Filter(I)	0.65	0.65	0.00	0.00	0.23	0.23	1.00	0.00	0.00	1.00	0.00	1.00
Uniform Delay (d), s/veh	62.3	53.4	0.0	0.0	51.0	51.0	58.4	0.0	0.0	57.0	0.0	57.8
Incr Delay (d2), s/veh	1.5	1.2	0.0	0.0	35.9	209.4	12.1	0.0	0.0	2.1	0.0	7.6
Initial Q Delay(d3),s/veh	0.0	0.0	0.0	0.0	0.0	0.0	0.0	0.0	0.0	0.0	0.0	0.0
%ile BackOfQ(50%),veh/ln	3.9	18.7	0.0	0.0	20.1	37.9	7.8	0.0	0.0	5.7	0.0	6.2
LnGrp Delay(d),s/veh	63.8	54.6	0.0	0.0	86.9	260.4	70.5	0.0	0.0	59.1	0.0	65.4
LnGrp LOS	E	D			F	F	E			E		E
Approach Vol, veh/h		1626			1937			381			468	
Approach Delay, s/veh		55.2			138.6			70.5			61.2	
Approach LOS		E			F			E			E	

Timer	1	2	3	4	5	6	7	8
Assigned Phs		2		4	5	6		8
Phs Duration (G+Y+Rc), s		59.9		21.8	18.9	41.0		21.5
Change Period (Y+Rc), s		7.0		4.6	* 4.2	7.0		4.6
Max Green Setting (Gmax), s		54.0		45.4	* 16	33.8		20.4
Max Q Clear Time (g_c+I1), s		41.4		15.5	9.8	36.0		16.3
Green Ext Time (p_c), s		11.5		1.7	0.1	0.0		0.6

Intersection Summary	
HCM 2010 Ctrl Delay	93.8
HCM 2010 LOS	F

Notes

User approved volume balancing among the lanes for turning movement.

Movement	EBL	EBT	WBT	WBR	SBL	SBR
Lane Configurations						
Volume (veh/h)	630	1957	1694	818	0	973
Number	5	2	6	16		
Initial Q (Qb), veh	0	0	0	0		
Ped-Bike Adj(A_pbT)	1.00			1.00		
Parking Bus, Adj	1.00	1.00	1.00	1.00		
Adj Sat Flow, veh/h/ln	1863	1863	1863	1863		
Adj Flow Rate, veh/h	677	2104	1822	0		
Adj No. of Lanes	1	3	2	1		
Peak Hour Factor	0.93	0.93	0.93	0.93		
Percent Heavy Veh, %	2	2	2	2		
Cap, veh/h	694	4910	1944	870		
Arrive On Green	0.39	0.97	0.55	0.00		
Sat Flow, veh/h	1774	5253	3632	1583		
Grp Volume(v), veh/h	677	2104	1822	0		
Grp Sat Flow(s),veh/h/ln	1774	1695	1770	1583		
Q Serve(g_s), s	60.1	3.9	76.5	0.0		
Cycle Q Clear(g_c), s	60.1	3.9	76.5	0.0		
Prop In Lane	1.00			1.00		
Lane Grp Cap(c), veh/h	694	4910	1944	870		
V/C Ratio(X)	0.97	0.43	0.94	0.00		
Avail Cap(c_a), veh/h	710	4910	1944	870		
HCM Platoon Ratio	1.00	1.00	1.00	1.00		
Upstream Filter(I)	0.09	0.09	1.00	0.00		
Uniform Delay (d), s/veh	47.9	0.2	33.5	0.0		
Incr Delay (d2), s/veh	5.6	0.0	10.2	0.0		
Initial Q Delay(d3),s/veh	0.0	0.0	0.0	0.0		
%ile BackOfQ(50%),veh/ln	30.4	1.6	39.9	0.0		
LnGrp Delay(d),s/veh	53.5	0.2	43.7	0.0		
LnGrp LOS	D	A	D			
Approach Vol, veh/h		2781	1822			
Approach Delay, s/veh		13.2	43.7			
Approach LOS		B	D			

Timer	1	2	3	4	5	6	7	8
Assigned Phs		2			5	6		
Phs Duration (G+Y+Rc), s		160.0			66.6	93.4		
Change Period (Y+Rc), s		5.5			4.0	5.5		
Max Green Setting (Gmax), s		154.5			64.0	86.5		
Max Q Clear Time (g_c+I1), s		5.9			62.1	78.5		
Green Ext Time (p_c), s		118.6			0.5	7.8		

Intersection Summary	
HCM 2010 Ctrl Delay	25.3
HCM 2010 LOS	C

Arterial Level of Service: NB Morena Blvd

Cross Street	Arterial Class	Flow Speed	Running Time	Signal Delay	Travel Time (s)	Dist (mi)	Arterial Speed	Arterial LOS
Taylor Street	III	30	15.5	23.4	38.9	0.11	10.2	E
Linda Vista Rd	III	45	38.8	13.6	52.4	0.43	29.3	B
Napa St	III	30	16.0	14.0	30.0	0.11	13.6	E
W. Morena Blvd	III	30	19.0	1.5	20.5	0.14	24.9	B
Buenos Ave	III	30	21.6	6.3	27.9	0.16	20.8	C
Tecolote Road	III	30	38.5	30.8	69.3	0.30	15.7	D
Total	III		149.4	89.6	239.0	1.26	18.9	C

Arterial Level of Service: SB Morena Blvd

Cross Street	Arterial Class	Flow Speed	Running Time	Signal Delay	Travel Time (s)	Dist (mi)	Arterial Speed	Arterial LOS
Tecolote Road	III	30	20.3	46.8	67.1	0.15	8.1	F
Buenos Ave	III	30	38.5	4.8	43.3	0.30	25.2	B
W. Morena Blvd	III	35	20.6	14.3	34.9	0.16	16.6	D
Sherman St	III	35	18.2	15.9	34.1	0.14	15.0	D
Linda Vista Rd	III	30	16.0	9.1	25.1	0.11	16.3	D
Taylor Street	III	45	38.8	8.5	47.3	0.43	32.4	A
Total	III		152.4	99.4	251.8	1.30	18.5	C

Arterial Level of Service: NB Morena Blvd

Cross Street	Arterial Class	Flow Speed	Running Time	Signal Delay	Travel Time (s)	Dist (mi)	Arterial Speed	Arterial LOS
Taylor Street	III	30	15.5	23.4	38.9	0.11	10.2	E
Linda Vista Rd	III	45	38.8	13.7	52.5	0.43	29.2	B
Napa St	III	30	16.0	19.6	35.6	0.11	11.5	E
W. Morena Blvd	III	30	19.0	0.6	19.6	0.14	26.1	B
Buenos Ave	III	30	21.6	4.9	26.5	0.16	21.9	C
Tecolote Road	III	30	38.5	33.0	71.5	0.30	15.3	D
Total	III		149.4	95.2	244.6	1.26	18.5	C

Arterial Level of Service: SB Morena Blvd

Cross Street	Arterial Class	Flow Speed	Running Time	Signal Delay	Travel Time (s)	Dist (mi)	Arterial Speed	Arterial LOS
Tecolote Road	III	30	20.3	51.3	71.6	0.15	7.6	F
Buenos Ave	III	30	38.5	7.7	46.2	0.30	23.6	C
W. Morena Blvd	III	35	20.6	15.5	36.1	0.16	16.1	D
Sherman St	III	35	18.2	11.6	29.8	0.14	17.2	D
Linda Vista Rd	III	30	16.0	16.6	32.6	0.11	12.5	E
Taylor Street	III	45	38.8	8.5	47.3	0.43	32.4	A
Total	III		152.4	111.2	263.6	1.30	17.7	D

APPENDIX H

YEAR 2035 SANDAG VOLUME PLOT

SANDAG
Series 12 Forecast
2011 RTP

2035 AltA

ADT Volume Plot

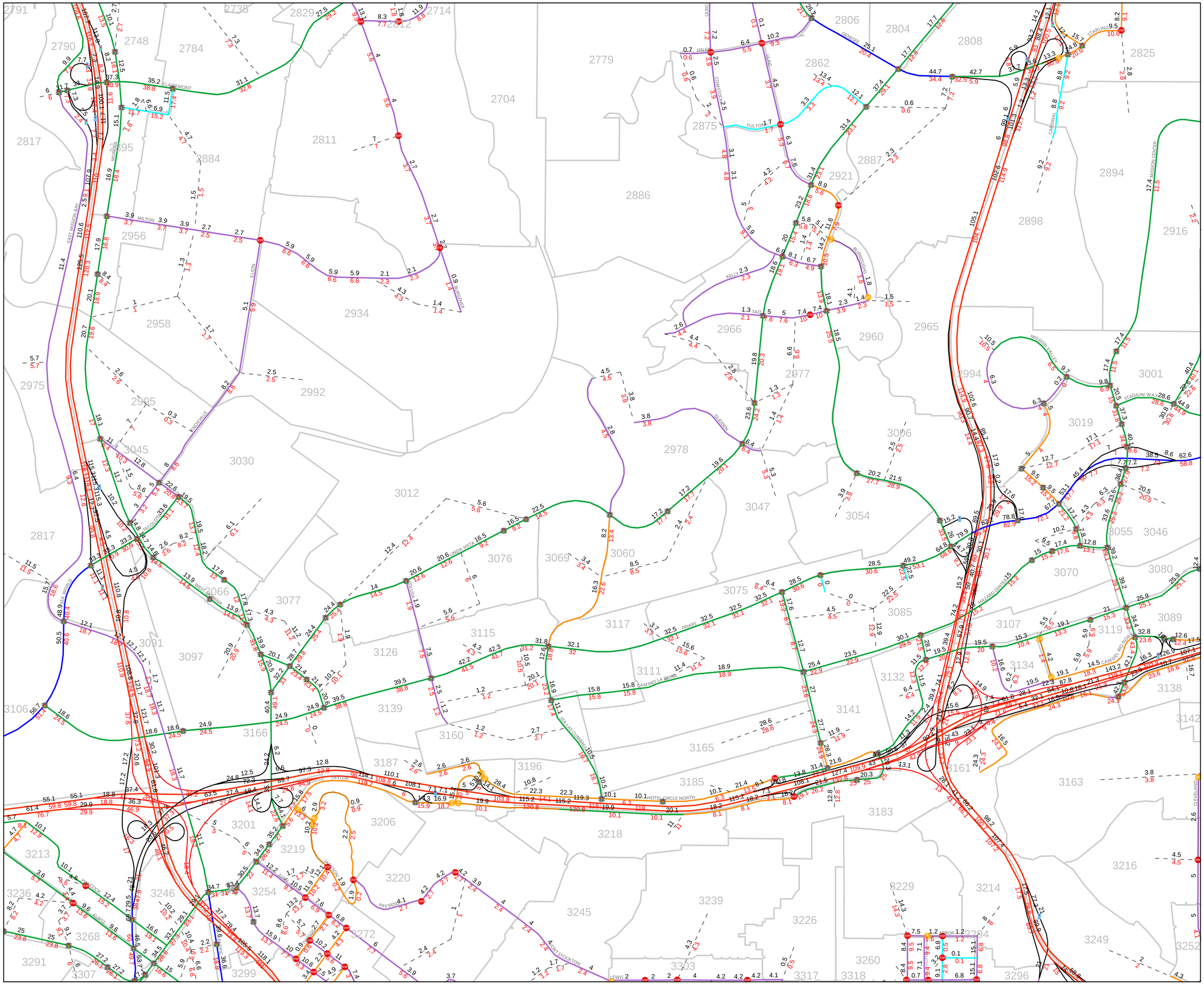

Portions of this map contain information from the San Diego Association of Governments (SANDAG) Regional Information System. This product cannot be reproduced without the written permission of SANDAG.

SAN DIEGO ASSOCIATION OF GOVERNMENTS
401 B STREET, SUITE 800
SAN DIEGO, CALIFORNIA 92101 USA
(619) 699-1900
E-mail: sandag@sandag.org
Web site: www.sandag.org

SANDAG
servicebureau

September 17, 2012

APPENDIX I

PEAK HOUR INTERSECTION ANALYSIS WORKSHEETS – YEAR 2035 WITHOUT PROJECT

Movement	EBL	EBT	EBR	WBL	WBT	WBR	NBL	NBT	NBR	SBL	SBT	SBR
Lane Configurations												
Volume (veh/h)	106	126	205	73	300	156	514	1330	192	150	996	120
Number	7	4	14	3	8	18	5	2	12	1	6	16
Initial Q (Qb), veh	0	0	0	0	0	0	0	0	0	0	0	0
Ped-Bike Adj(A_pbT)	1.00		0.96	1.00		0.97	1.00		1.00	1.00		0.99
Parking Bus, Adj	1.00	1.00	1.00	1.00	1.00	1.00	1.00	1.00	1.00	1.00	1.00	1.00
Adj Sat Flow, veh/h/ln	1863	1863	1863	1863	1863	1863	1863	1863	1900	1863	1863	1863
Adj Flow Rate, veh/h	114	135	220	78	323	168	553	1430	206	161	1071	129
Adj No. of Lanes	2	1	1	1	1	1	2	2	0	1	2	1
Peak Hour Factor	0.93	0.93	0.93	0.93	0.93	0.93	0.93	0.93	0.93	0.93	0.93	0.93
Percent Heavy Veh, %	2	2	2	2	2	2	2	2	2	2	2	2
Cap, veh/h	161	366	300	89	372	307	609	1556	222	187	1516	744
Arrive On Green	0.05	0.20	0.20	0.05	0.20	0.20	0.18	0.50	0.50	0.11	0.43	0.43
Sat Flow, veh/h	3442	1863	1526	1774	1863	1541	3442	3111	443	1774	3539	1564
Grp Volume(v), veh/h	114	135	220	78	323	168	553	807	829	161	1071	129
Grp Sat Flow(s),veh/h/ln	1721	1863	1526	1774	1863	1541	1721	1770	1785	1774	1770	1564
Q Serve(g_s), s	4.3	8.3	17.9	5.8	22.2	12.9	20.8	55.3	57.4	11.8	32.8	6.2
Cycle Q Clear(g_c), s	4.3	8.3	17.9	5.8	22.2	12.9	20.8	55.3	57.4	11.8	32.8	6.2
Prop In Lane	1.00		1.00	1.00		1.00	1.00		0.25	1.00		1.00
Lane Grp Cap(c), veh/h	161	366	300	89	372	307	609	885	893	187	1516	744
V/C Ratio(X)	0.71	0.37	0.73	0.88	0.87	0.55	0.91	0.91	0.93	0.86	0.71	0.17
Avail Cap(c_a), veh/h	161	437	358	89	437	361	711	885	893	317	1633	795
HCM Platoon Ratio	1.00	1.00	1.00	1.00	1.00	1.00	1.00	1.00	1.00	1.00	1.00	1.00
Upstream Filter(I)	1.00	1.00	1.00	1.00	1.00	1.00	1.00	1.00	1.00	1.00	1.00	1.00
Uniform Delay (d), s/veh	62.1	46.0	49.9	62.4	51.3	47.6	53.4	30.3	30.9	58.2	31.0	19.8
Incr Delay (d2), s/veh	11.4	0.6	6.2	56.9	13.6	0.6	13.1	13.6	15.9	5.3	1.5	0.2
Initial Q Delay(d3),s/veh	0.0	0.0	0.0	0.0	0.0	0.0	0.0	0.0	0.0	0.0	0.0	0.0
%ile BackOfQ(50%),veh/ln	2.3	4.3	8.1	4.2	12.8	5.5	11.0	30.2	32.0	6.1	16.2	2.7
LnGrp Delay(d),s/veh	73.5	46.7	56.1	119.4	64.9	48.1	66.4	43.9	46.7	63.6	32.5	20.0
LnGrp LOS	E	D	E	F	E	D	E	D	D	E	C	B
Approach Vol, veh/h		469			569			2189			1361	
Approach Delay, s/veh		57.6			67.4			50.7			35.0	
Approach LOS		E			E			D			C	

Timer	1	2	3	4	5	6	7	8
Assigned Phs	1	2	3	4	5	6	7	8
Phs Duration (G+Y+Rc), s	18.3	71.4	11.0	31.5	27.8	62.0	10.6	31.9
Change Period (Y+Rc), s	4.4	5.3	4.4	* 5.5	4.4	* 5.3	4.4	5.5
Max Green Setting (Gmax), s	23.6	64.6	6.6	* 31	27.3	* 61	6.2	31.0
Max Q Clear Time (g_c+I1), s	13.8	59.4	7.8	19.9	22.8	34.8	6.3	24.2
Green Ext Time (p_c), s	0.1	5.1	0.0	2.6	0.6	21.9	0.0	2.0

Intersection Summary	
HCM 2010 Ctrl Delay	48.8
HCM 2010 LOS	D

Notes

* HCM 2010 computational engine requires equal clearance times for the phases crossing the barrier.

Movement	EBL	EBT	EBR	WBL	WBT	WBR	NBL	NBT	NBR	SBL	SBT	SBR
Lane Configurations												
Volume (veh/h)	1	1484	107	517	345	0	0	0	0	380	0	921
Number	5	2	12	1	6	16				7	4	14
Initial Q (Qb), veh	0	0	0	0	0	0				0	0	0
Ped-Bike Adj(A_pbT)	1.00		1.00	1.00		1.00				1.00		1.00
Parking Bus, Adj	1.00	1.00	1.00	1.00	1.00	1.00				1.00	1.00	1.00
Adj Sat Flow, veh/h/ln	1900	1863	1863	1863	1863	0				1900	1863	1863
Adj Flow Rate, veh/h	1	1530	110	533	356	0				392	0	0
Adj No. of Lanes	0	2	1	2	2	0				0	1	1
Peak Hour Factor	0.97	0.97	0.97	0.97	0.97	0.97				0.97	0.97	0.97
Percent Heavy Veh, %	2	2	2	2	2	0				2	2	2
Cap, veh/h	28	1739	793	524	2426	0				427	0	381
Arrive On Green	0.50	0.50	0.50	0.15	0.69	0.00				0.24	0.00	0.00
Sat Flow, veh/h	0	3473	1583	3442	3632	0				1774	0	1583
Grp Volume(v), veh/h	821	710	110	533	356	0				392	0	0
Grp Sat Flow(s),veh/h/ln	1863	1610	1583	1721	1770	0				1774	0	1583
Q Serve(g_s), s	0.0	51.2	4.8	19.8	4.6	0.0				28.0	0.0	0.0
Cycle Q Clear(g_c), s	51.2	51.2	4.8	19.8	4.6	0.0				28.0	0.0	0.0
Prop In Lane	0.00		1.00	1.00		0.00				1.00		1.00
Lane Grp Cap(c), veh/h	961	807	793	524	2426	0				427	0	381
V/C Ratio(X)	0.85	0.88	0.14	1.02	0.15	0.00				0.92	0.00	0.00
Avail Cap(c_a), veh/h	961	807	793	524	2426	0				497	0	443
HCM Platoon Ratio	1.00	1.00	1.00	1.00	1.00	1.00				1.00	1.00	1.00
Upstream Filter(I)	1.00	1.00	1.00	0.27	0.27	0.00				1.00	0.00	0.00
Uniform Delay (d), s/veh	29.0	29.0	17.4	55.1	7.1	0.0				48.1	0.0	0.0
Incr Delay (d2), s/veh	9.6	13.2	0.4	24.7	0.0	0.0				20.4	0.0	0.0
Initial Q Delay(d3),s/veh	0.0	0.0	0.0	0.0	0.0	0.0				0.0	0.0	0.0
%ile BackOfQ(50%),veh/ln	28.8	25.6	2.2	11.2	2.2	0.0				16.1	0.0	0.0
LnGrp Delay(d),s/veh	38.6	42.1	17.8	79.8	7.2	0.0				68.5	0.0	0.0
LnGrp LOS	D	D	B	F	A					E		
Approach Vol, veh/h		1641			889						392	
Approach Delay, s/veh		38.7			50.7						68.5	
Approach LOS		D			D						E	

Timer	1	2	3	4	5	6	7	8
Assigned Phs	1	2		4		6		
Phs Duration (G+Y+Rc), s	24.0	70.1		35.9		94.1		
Change Period (Y+Rc), s	* 4.2	5.0		4.6		5.0		
Max Green Setting (Gmax), s	* 20.0	60.0		36.4		84.0		
Max Q Clear Time (g_c+I1), s	21.8	53.2		30.0		6.6		
Green Ext Time (p_c), s	0.0	5.7		1.3		27.4		

Intersection Summary	
HCM 2010 Ctrl Delay	46.4
HCM 2010 LOS	D

Notes

* HCM 2010 computational engine requires equal clearance times for the phases crossing the barrier.

Movement	EBL	EBT	EBR	WBL	WBT	WBR	NBL	NBT	NBR	SBL	SBT	SBR
Lane Configurations												
Volume (veh/h)	1134	730	0	0	674	502	188	6	398	0	0	0
Number	5	2	12	1	6	16	7	4	14			
Initial Q (Qb), veh	0	0	0	0	0	0	0	0	0			
Ped-Bike Adj(A_pbT)	1.00		1.00	1.00		0.98	1.00		1.00			
Parking Bus, Adj	1.00	1.00	1.00	1.00	1.00	1.00	1.00	1.00	1.00			
Adj Sat Flow, veh/h/ln	1863	1863	0	0	1863	1900	1900	1863	1863			
Adj Flow Rate, veh/h	1194	768	0	0	709	528	198	6	419			
Adj No. of Lanes	2	2	0	0	2	0	0	1	1			
Peak Hour Factor	0.95	0.95	0.95	0.95	0.95	0.95	0.95	0.95	0.95			
Percent Heavy Veh, %	2	2	0	0	2	2	2	2	2			
Cap, veh/h	1235	2699	0	0	710	523	264	8	243			
Arrive On Green	0.36	0.76	0.00	0.00	0.37	0.37	0.15	0.15	0.15			
Sat Flow, veh/h	3442	3632	0	0	2019	1419	1724	52	1583			
Grp Volume(v), veh/h	1194	768	0	0	651	586	204	0	419			
Grp Sat Flow(s),veh/h/ln	1721	1770	0	0	1770	1575	1777	0	1583			
Q Serve(g_s), s	40.9	7.9	0.0	0.0	44.1	44.2	13.2	0.0	18.4			
Cycle Q Clear(g_c), s	40.9	7.9	0.0	0.0	44.1	44.2	13.2	0.0	18.4			
Prop In Lane	1.00		0.00	0.00		0.90	0.97		1.00			
Lane Grp Cap(c), veh/h	1235	2699	0	0	652	581	272	0	243			
V/C Ratio(X)	0.97	0.28	0.00	0.00	1.00	1.01	0.75	0.00	1.73			
Avail Cap(c_a), veh/h	1239	2699	0	0	652	581	272	0	243			
HCM Platoon Ratio	1.00	1.00	1.00	1.00	1.00	1.00	1.00	1.00	1.00			
Upstream Filter(I)	0.13	0.13	0.00	0.00	0.79	0.79	1.00	0.00	1.00			
Uniform Delay (d), s/veh	37.8	4.3	0.0	0.0	37.8	37.9	48.6	0.0	50.8			
Incr Delay (d2), s/veh	4.2	0.0	0.0	0.0	30.8	35.5	10.9	0.0	343.4			
Initial Q Delay(d3),s/veh	0.0	0.0	0.0	0.0	0.0	0.0	0.0	0.0	0.0			
%ile BackOfQ(50%),veh/ln	20.1	3.9	0.0	0.0	27.1	24.9	7.3	0.0	38.0			
LnGrp Delay(d),s/veh	41.9	4.4	0.0	0.0	68.6	73.4	59.5	0.0	394.2			
LnGrp LOS	D	A			E	F	E		F			
Approach Vol, veh/h		1962			1237			623				
Approach Delay, s/veh		27.2			70.9			284.6				
Approach LOS		C			E			F				

Timer	1	2	3	4	5	6	7	8
Assigned Phs		2		4	5	6		
Phs Duration (G+Y+Rc), s		97.0		23.0	47.3	49.7		
Change Period (Y+Rc), s		5.5		4.6	* 4.2	5.5		
Max Green Setting (Gmax), s		91.5		18.4	* 43	44.1		
Max Q Clear Time (g_c+I1), s		9.9		20.4	42.9	46.2		
Green Ext Time (p_c), s		29.0		0.0	0.2	0.0		

Intersection Summary	
HCM 2010 Ctrl Delay	83.3
HCM 2010 LOS	F

Notes

* HCM 2010 computational engine requires equal clearance times for the phases crossing the barrier.

Movement	EBL	EBT	EBR	WBL	WBT	WBR	NBL	NBT	NBR	SBL	SBT	SBR
Lane Configurations												
Volume (veh/h)	384	62	436	11	25	12	505	250	33	19	170	600
Number	5	2	12	1	6	16	3	8	18	7	4	14
Initial Q (Qb), veh	0	0	0	0	0	0	0	0	0	0	0	0
Ped-Bike Adj(A_pbT)	1.00		1.00	1.00		1.00	1.00		1.00	1.00		1.00
Parking Bus, Adj	1.00	1.00	1.00	1.00	1.00	1.00	1.00	1.00	1.00	1.00	1.00	1.00
Adj Sat Flow, veh/h/ln	1863	1863	1863	1863	1863	1900	1863	1863	1900	1900	1863	1863
Adj Flow Rate, veh/h	413	67	469	12	27	13	561	243	35	20	514	424
Adj No. of Lanes	2	1	1	1	2	0	2	1	0	0	1	1
Peak Hour Factor	0.93	0.93	0.93	0.93	0.93	0.93	0.93	0.93	0.93	0.93	0.93	0.93
Percent Heavy Veh, %	2	2	2	2	2	2	2	2	2	2	2	2
Cap, veh/h	939	508	747	96	128	57	706	317	46	19	493	436
Arrive On Green	0.27	0.27	0.27	0.05	0.05	0.05	0.20	0.20	0.20	0.28	0.28	0.28
Sat Flow, veh/h	3442	1863	1583	1774	2378	1066	3548	1593	229	70	1790	1583
Grp Volume(v), veh/h	413	67	469	12	20	20	561	0	278	534	0	424
Grp Sat Flow(s),veh/h/ln	1721	1863	1583	1774	1770	1675	1774	0	1822	1859	0	1583
Q Serve(g_s), s	9.8	2.7	21.9	0.6	1.0	1.2	14.8	0.0	14.2	27.2	0.0	26.1
Cycle Q Clear(g_c), s	9.8	2.7	21.9	0.6	1.0	1.2	14.8	0.0	14.2	27.2	0.0	26.1
Prop In Lane	1.00		1.00	1.00		0.64	1.00		0.13	0.04		1.00
Lane Grp Cap(c), veh/h	939	508	747	96	95	90	706	0	363	512	0	436
V/C Ratio(X)	0.44	0.13	0.63	0.13	0.21	0.23	0.79	0.00	0.77	1.04	0.00	0.97
Avail Cap(c_a), veh/h	1015	549	782	307	307	290	971	0	499	512	0	436
HCM Platoon Ratio	1.00	1.00	1.00	1.00	1.00	1.00	1.00	1.00	1.00	1.00	1.00	1.00
Upstream Filter(I)	1.00	1.00	1.00	1.00	1.00	1.00	1.00	0.00	1.00	1.00	0.00	1.00
Uniform Delay (d), s/veh	29.7	27.1	19.6	44.5	44.7	44.7	37.6	0.0	37.3	35.7	0.0	35.4
Incr Delay (d2), s/veh	0.6	0.2	2.2	0.6	1.1	1.3	3.2	0.0	4.8	51.1	0.0	35.6
Initial Q Delay(d3),s/veh	0.0	0.0	0.0	0.0	0.0	0.0	0.0	0.0	0.0	0.0	0.0	0.0
%ile BackOfQ(50%),veh/ln	4.7	1.4	13.1	0.3	0.5	0.6	7.6	0.0	7.7	21.1	0.0	15.7
LnGrp Delay(d),s/veh	30.3	27.3	21.7	45.1	45.7	46.0	40.8	0.0	42.1	86.9	0.0	70.9
LnGrp LOS	C	C	C	D	D	D	D		D	F		E
Approach Vol, veh/h		949			52			839			958	
Approach Delay, s/veh		25.8			45.7			41.2			79.8	
Approach LOS		C			D			D			E	

Timer	1	2	3	4	5	6	7	8
Assigned Phs		2		4		6		8
Phs Duration (G+Y+Rc), s		31.8		32.1		10.2		24.5
Change Period (Y+Rc), s		4.9		4.9		4.9		4.9
Max Green Setting (Gmax), s		29.1		27.2		17.1		27.0
Max Q Clear Time (g_c+I1), s		23.9		29.2		3.2		16.8
Green Ext Time (p_c), s		3.0		0.0		0.1		2.8

Intersection Summary	
HCM 2010 Ctrl Delay	49.3
HCM 2010 LOS	D

Notes

User approved volume balancing among the lanes for turning movement.

Movement	EBL	EBT	EBR	WBL	WBT	WBR	NBL	NBT	NBR	SBL	SBT	SBR
Lane Configurations												
Volume (veh/h)	22	9	27	137	7	28	14	717	37	9	408	42
Number	7	4	14	3	8	18	5	2	12	1	6	16
Initial Q (Qb), veh	0	0	0	0	0	0	0	0	0	0	0	0
Ped-Bike Adj(A_pbT)	1.00		1.00	1.00		1.00	1.00		1.00	1.00		1.00
Parking Bus, Adj	1.00	1.00	1.00	1.00	1.00	1.00	1.00	1.00	1.00	1.00	1.00	1.00
Adj Sat Flow, veh/h/ln	1900	1863	1900	1900	1863	1900	1863	1863	1900	1863	1863	1900
Adj Flow Rate, veh/h	24	10	30	151	8	31	15	788	41	10	448	46
Adj No. of Lanes	0	1	0	0	1	0	1	1	0	1	1	0
Peak Hour Factor	0.91	0.91	0.91	0.91	0.91	0.91	0.91	0.91	0.91	0.91	0.91	0.91
Percent Heavy Veh, %	2	2	2	2	2	2	2	2	2	2	2	2
Cap, veh/h	124	61	119	244	10	37	24	1207	63	17	1136	117
Arrive On Green	0.15	0.15	0.15	0.15	0.15	0.15	0.01	0.69	0.69	0.01	0.68	0.68
Sat Flow, veh/h	491	400	786	1186	63	243	1774	1755	91	1774	1662	171
Grp Volume(v), veh/h	64	0	0	190	0	0	15	0	829	10	0	494
Grp Sat Flow(s),veh/h/ln	1678	0	0	1492	0	0	1774	0	1847	1774	0	1833
Q Serve(g_s), s	0.0	0.0	0.0	8.9	0.0	0.0	0.8	0.0	25.4	0.6	0.0	11.7
Cycle Q Clear(g_c), s	3.3	0.0	0.0	12.2	0.0	0.0	0.8	0.0	25.4	0.6	0.0	11.7
Prop In Lane	0.37		0.47	0.79		0.16	1.00		0.05	1.00		0.09
Lane Grp Cap(c), veh/h	304	0	0	291	0	0	24	0	1270	17	0	1253
V/C Ratio(X)	0.21	0.00	0.00	0.65	0.00	0.00	0.62	0.00	0.65	0.58	0.00	0.39
Avail Cap(c_a), veh/h	698	0	0	655	0	0	71	0	1270	71	0	1253
HCM Platoon Ratio	1.00	1.00	1.00	1.00	1.00	1.00	1.00	1.00	1.00	1.00	1.00	1.00
Upstream Filter(I)	1.00	0.00	0.00	1.00	0.00	0.00	1.00	0.00	1.00	1.00	0.00	1.00
Uniform Delay (d), s/veh	37.4	0.0	0.0	40.9	0.0	0.0	49.1	0.0	8.9	49.3	0.0	6.8
Incr Delay (d2), s/veh	0.1	0.0	0.0	0.9	0.0	0.0	9.3	0.0	2.6	11.0	0.0	0.9
Initial Q Delay(d3),s/veh	0.0	0.0	0.0	0.0	0.0	0.0	0.0	0.0	0.0	0.0	0.0	0.0
%ile BackOfQ(50%),veh/ln	1.6	0.0	0.0	5.1	0.0	0.0	0.5	0.0	13.6	0.3	0.0	6.2
LnGrp Delay(d),s/veh	37.5	0.0	0.0	41.8	0.0	0.0	58.3	0.0	11.5	60.3	0.0	7.8
LnGrp LOS	D			D			E		B	E		A
Approach Vol, veh/h		64			190			844			504	
Approach Delay, s/veh		37.5			41.8			12.3			8.8	
Approach LOS		D			D			B			A	

Timer	1	2	3	4	5	6	7	8
Assigned Phs	1	2		4	5	6		8
Phs Duration (G+Y+Rc), s	5.4	74.6		20.1	5.8	74.2		20.1
Change Period (Y+Rc), s	4.4	* 5.8		4.9	4.4	5.8		4.9
Max Green Setting (Gmax), s	1.0	* 40		41.0	4.0	39.9		41.0
Max Q Clear Time (g_c+I1), s	2.6	27.4		5.3	2.8	13.7		14.2
Green Ext Time (p_c), s	0.0	8.7		1.0	0.0	14.2		1.0

Intersection Summary	
HCM 2010 Ctrl Delay	15.7
HCM 2010 LOS	B

Notes

* HCM 2010 computational engine requires equal clearance times for the phases crossing the barrier.

Movement	NBT	NBR	SBL	SBT	SWL	SWR
Lane Configurations						
Volume (veh/h)	731	883	0	446	580	4
Number	2	12	1	6	3	18
Initial Q (Qb), veh	0	0	0	0	0	0
Ped-Bike Adj(A_pbT)		1.00	1.00		1.00	1.00
Parking Bus, Adj	1.00	1.00	1.00	1.00	1.00	1.00
Adj Sat Flow, veh/h/ln	1863	1900	0	1863	1863	1900
Adj Flow Rate, veh/h	795	960	0	485	634	0
Adj No. of Lanes	2	0	0	2	2	1
Peak Hour Factor	0.92	0.92	0.92	0.92	0.92	0.92
Percent Heavy Veh, %	2	2	0	2	2	0
Cap, veh/h	1113	996	0	2226	761	346
Arrive On Green	0.63	0.63	0.00	0.63	0.21	0.00
Sat Flow, veh/h	1863	1583	0	3725	3548	1615
Grp Volume(v), veh/h	795	960	0	485	634	0
Grp Sat Flow(s),veh/h/ln	1770	1583	0	1770	1774	1615
Q Serve(g_s), s	20.7	39.1	0.0	4.0	11.7	0.0
Cycle Q Clear(g_c), s	20.7	39.1	0.0	4.0	11.7	0.0
Prop In Lane		1.00	0.00		1.00	1.00
Lane Grp Cap(c), veh/h	1113	996	0	2226	761	346
V/C Ratio(X)	0.71	0.96	0.00	0.22	0.83	0.00
Avail Cap(c_a), veh/h	1113	996	0	2226	908	413
HCM Platoon Ratio	1.00	1.00	1.00	1.00	1.00	1.00
Upstream Filter(I)	1.00	1.00	0.00	1.00	1.00	0.00
Uniform Delay (d), s/veh	8.5	12.0	0.0	5.5	25.7	0.0
Incr Delay (d2), s/veh	3.9	21.0	0.0	0.2	5.8	0.0
Initial Q Delay(d3),s/veh	0.0	0.0	0.0	0.0	0.0	0.0
%ile BackOfQ(50%),veh/ln	11.2	22.4	0.0	2.0	6.3	0.0
LnGrp Delay(d),s/veh	12.5	33.0	0.0	5.7	31.4	0.0
LnGrp LOS	B	C		A	C	
Approach Vol, veh/h	1755			485	634	
Approach Delay, s/veh	23.7			5.7	31.4	
Approach LOS	C			A	C	

Timer	1	2	3	4	5	6	7	8
Assigned Phs		2				6		8
Phs Duration (G+Y+Rc), s		48.8				48.8		19.6
Change Period (Y+Rc), s		* 5.8				5.8		4.9
Max Green Setting (Gmax), s		* 43				13.8		17.5
Max Q Clear Time (g_c+I1), s		41.1				6.0		13.7
Green Ext Time (p_c), s		1.8				7.0		1.0

Intersection Summary	
HCM 2010 Ctrl Delay	22.4
HCM 2010 LOS	C

Notes

User approved volume balancing among the lanes for turning movement.

Movement	EBL	EBT	EBR	WBL	WBT	WBR	NBL	NBT	NBR	SBL	SBT	SBR
Lane Configurations												
Volume (veh/h)	28	13	49	5	16	693	152	821	13	534	424	52
Number	7	4	14	3	8	18	5	2	12	1	6	16
Initial Q (Qb), veh	0	0	0	0	0	0	0	0	0	0	0	0
Ped-Bike Adj(A_pbT)	1.00		1.00	1.00		1.00	1.00		1.00	1.00		1.00
Parking Bus, Adj	1.00	1.00	1.00	1.00	1.00	1.00	1.00	1.00	1.00	1.00	1.00	1.00
Adj Sat Flow, veh/h/ln	1863	1863	1900	1900	1863	1863	1863	1863	1900	1863	1863	1900
Adj Flow Rate, veh/h	30	14	53	0	0	770	165	892	14	580	461	57
Adj No. of Lanes	1	1	0	0	1	2	1	3	0	2	2	0
Peak Hour Factor	0.92	0.92	0.92	0.92	0.92	0.92	0.92	0.92	0.92	0.92	0.92	0.92
Percent Heavy Veh, %	2	2	2	2	2	2	2	2	2	2	2	2
Cap, veh/h	252	80	301	0	434	1341	201	2033	32	655	1495	184
Arrive On Green	0.23	0.23	0.23	0.00	0.00	0.23	0.11	0.39	0.39	0.19	0.47	0.47
Sat Flow, veh/h	696	342	1293	0	1863	3167	1774	5158	81	3442	3173	391
Grp Volume(v), veh/h	30	0	67	0	0	770	165	586	320	580	256	262
Grp Sat Flow(s),veh/h/ln	696	0	1635	0	1863	1583	1774	1695	1848	1721	1770	1794
Q Serve(g_s), s	2.8	0.0	2.6	0.0	0.0	14.8	7.3	10.1	10.1	13.1	7.2	7.2
Cycle Q Clear(g_c), s	2.8	0.0	2.6	0.0	0.0	14.8	7.3	10.1	10.1	13.1	7.2	7.2
Prop In Lane	1.00		0.79	0.00		1.00	1.00		0.04	1.00		0.22
Lane Grp Cap(c), veh/h	252	0	381	0	434	1341	201	1336	729	655	834	845
V/C Ratio(X)	0.12	0.00	0.18	0.00	0.00	0.57	0.82	0.44	0.44	0.89	0.31	0.31
Avail Cap(c_a), veh/h	316	0	531	0	605	1632	213	1336	729	671	834	845
HCM Platoon Ratio	1.00	1.00	1.00	1.00	1.00	1.00	1.00	1.00	1.00	1.00	1.00	1.00
Upstream Filter(I)	1.00	0.00	1.00	0.00	0.00	0.52	1.00	1.00	1.00	1.00	1.00	1.00
Uniform Delay (d), s/veh	24.6	0.0	24.5	0.0	0.0	17.6	34.7	17.8	17.8	31.5	13.1	13.1
Incr Delay (d2), s/veh	0.1	0.0	0.1	0.0	0.0	0.1	19.6	1.0	1.9	12.8	1.0	1.0
Initial Q Delay(d3),s/veh	0.0	0.0	0.0	0.0	0.0	0.0	0.0	0.0	0.0	0.0	0.0	0.0
%ile BackOfQ(50%),veh/ln	0.5	0.0	1.2	0.0	0.0	6.4	4.7	4.9	5.5	7.4	3.7	3.8
LnGrp Delay(d),s/veh	24.7	0.0	24.6	0.0	0.0	17.6	54.3	18.8	19.7	44.4	14.0	14.0
LnGrp LOS	C		C			B	D	B	B	D	B	B
Approach Vol, veh/h		97			770			1071			1098	
Approach Delay, s/veh		24.6			17.6			24.5			30.1	
Approach LOS		C			B			C			C	

Timer	1	2	3	4	5	6	7	8
Assigned Phs	1	2		4	5	6		8
Phs Duration (G+Y+Rc), s	19.6	36.8		23.6	13.4	43.0		23.6
Change Period (Y+Rc), s	4.4	* 5.3		4.9	4.4	5.3		4.9
Max Green Setting (Gmax), s	15.6	* 24		26.0	9.6	29.8		26.0
Max Q Clear Time (g_c+I1), s	15.1	12.1		4.8	9.3	9.2		16.8
Green Ext Time (p_c), s	0.1	7.1		2.3	0.0	10.1		1.8

Intersection Summary	
HCM 2010 Ctrl Delay	24.8
HCM 2010 LOS	C

Notes

User approved volume balancing among the lanes for turning movement.

Movement	WBL	WBR	NBT	NBR	SBL	SBT
Lane Configurations						
Volume (veh/h)	927	10	1024	1031	0	461
Number	3	18	2	12	1	6
Initial Q (Qb), veh	0	0	0	0	0	0
Ped-Bike Adj(A_pbT)	1.00	1.00		1.00	1.00	
Parking Bus, Adj	1.00	1.00	1.00	1.00	1.00	1.00
Adj Sat Flow, veh/h/ln	1863	1900	1863	1863	0	1863
Adj Flow Rate, veh/h	1052	0	1151	0	0	518
Adj No. of Lanes	2	1	2	1	0	2
Peak Hour Factor	0.89	0.89	0.89	0.89	0.89	0.89
Percent Heavy Veh, %	2	0	2	2	0	2
Cap, veh/h	1194	543	1511	676	0	1511
Arrive On Green	0.34	0.00	0.43	0.00	0.00	0.43
Sat Flow, veh/h	3548	1615	3632	1583	0	3725
Grp Volume(v), veh/h	1052	0	1151	0	0	518
Grp Sat Flow(s),veh/h/ln	1774	1615	1770	1583	0	1770
Q Serve(g_s), s	16.8	0.0	16.6	0.0	0.0	5.9
Cycle Q Clear(g_c), s	16.8	0.0	16.6	0.0	0.0	5.9
Prop In Lane	1.00	1.00		1.00	0.00	
Lane Grp Cap(c), veh/h	1194	543	1511	676	0	1511
V/C Ratio(X)	0.88	0.00	0.76	0.00	0.00	0.34
Avail Cap(c_a), veh/h	1260	573	1511	676	0	1511
HCM Platoon Ratio	1.00	1.00	1.00	1.00	1.00	1.00
Upstream Filter(I)	1.00	0.00	1.00	0.00	0.00	1.00
Uniform Delay (d), s/veh	18.8	0.0	14.6	0.0	0.0	11.5
Incr Delay (d2), s/veh	7.5	0.0	3.7	0.0	0.0	0.6
Initial Q Delay(d3),s/veh	0.0	0.0	0.0	0.0	0.0	0.0
%ile BackOfQ(50%),veh/ln	9.4	0.0	8.8	0.0	0.0	3.0
LnGrp Delay(d),s/veh	26.2	0.0	18.3	0.0	0.0	12.2
LnGrp LOS	C		B			B
Approach Vol, veh/h	1052		1151			518
Approach Delay, s/veh	26.2		18.3			12.2
Approach LOS	C		B			B

Timer	1	2	3	4	5	6	7	8
Assigned Phs		2				6		8
Phs Duration (G+Y+Rc), s		31.1				31.1		28.9
Change Period (Y+Rc), s		5.5				* 5.5		8.7
Max Green Setting (Gmax), s		24.5				* 25		21.3
Max Q Clear Time (g_c+I1), s		18.6				7.9		18.8
Green Ext Time (p_c), s		5.1				12.8		1.4

Intersection Summary	
HCM 2010 Ctrl Delay	20.2
HCM 2010 LOS	C

Notes

User approved volume balancing among the lanes for turning movement.

Movement	EBL	EBT	EBR	WBL	WBT	WBR	NBL	NBT	NBR	SBL	SBT	SBR
Lane Configurations												
Volume (veh/h)	357	163	33	308	316	170	34	816	185	69	576	311
Number	7	4	14	3	8	18	5	2	12	1	6	16
Initial Q (Qb), veh	0	0	0	0	0	0	0	0	0	0	0	0
Ped-Bike Adj(A_pbT)	1.00		1.00	1.00		1.00	1.00		1.00	1.00		1.00
Parking Bus, Adj	1.00	1.00	1.00	1.00	1.00	1.00	1.00	1.00	1.00	1.00	1.00	1.00
Adj Sat Flow, veh/h/ln	1863	1863	1900	1863	1863	1863	1863	1863	1900	1863	1863	1900
Adj Flow Rate, veh/h	329	328	39	416	307	202	40	971	220	82	686	370
Adj No. of Lanes	1	1	0	2	1	1	1	2	0	1	2	0
Peak Hour Factor	0.84	0.84	0.84	0.84	0.84	0.84	0.84	0.84	0.84	0.84	0.84	0.84
Percent Heavy Veh, %	2	2	2	2	2	2	2	2	2	2	2	2
Cap, veh/h	391	360	43	656	344	293	51	1071	242	103	896	483
Arrive On Green	0.22	0.22	0.22	0.18	0.18	0.18	0.03	0.37	0.37	0.06	0.40	0.40
Sat Flow, veh/h	1774	1634	194	3548	1863	1583	1774	2869	649	1774	2223	1198
Grp Volume(v), veh/h	329	0	367	416	307	202	40	598	593	82	546	510
Grp Sat Flow(s),veh/h/ln	1774	0	1828	1774	1863	1583	1774	1770	1748	1774	1770	1651
Q Serve(g_s), s	21.3	0.0	23.5	13.0	19.3	14.3	2.7	38.4	38.6	5.5	32.0	32.0
Cycle Q Clear(g_c), s	21.3	0.0	23.5	13.0	19.3	14.3	2.7	38.4	38.6	5.5	32.0	32.0
Prop In Lane	1.00		0.11	1.00		1.00	1.00		0.37	1.00		0.73
Lane Grp Cap(c), veh/h	391	0	403	656	344	293	51	661	653	103	713	665
V/C Ratio(X)	0.84	0.00	0.91	0.63	0.89	0.69	0.78	0.91	0.91	0.79	0.77	0.77
Avail Cap(c_a), veh/h	415	0	428	713	374	318	74	661	653	105	713	665
HCM Platoon Ratio	1.00	1.00	1.00	1.00	1.00	1.00	1.00	1.00	1.00	1.00	1.00	1.00
Upstream Filter(I)	0.61	0.00	0.61	1.00	1.00	1.00	1.00	1.00	1.00	1.00	1.00	1.00
Uniform Delay (d), s/veh	44.8	0.0	45.6	45.2	47.7	45.7	57.9	35.6	35.6	55.8	30.9	30.9
Incr Delay (d2), s/veh	9.0	0.0	15.7	1.1	20.4	4.4	17.0	18.2	18.7	30.2	7.7	8.2
Initial Q Delay(d3),s/veh	0.0	0.0	0.0	0.0	0.0	0.0	0.0	0.0	0.0	0.0	0.0	0.0
%ile BackOfQ(50%),veh/ln	11.4	0.0	13.6	6.5	11.9	6.6	1.6	22.1	22.0	3.6	17.1	16.1
LnGrp Delay(d),s/veh	53.8	0.0	61.4	46.3	68.1	50.1	74.9	53.8	54.4	86.0	38.6	39.2
LnGrp LOS	D		E	D	E	D	E	D	D	F	D	D
Approach Vol, veh/h		696			925			1231			1138	
Approach Delay, s/veh		57.8			54.4			54.8			42.3	
Approach LOS		E			D			D			D	

Timer	1	2	3	4	5	6	7	8
Assigned Phs	1	2		4	5	6		8
Phs Duration (G+Y+Rc), s	11.4	50.2		31.3	7.9	53.7		27.1
Change Period (Y+Rc), s	4.4	* 5.4		4.9	4.4	5.4		4.9
Max Green Setting (Gmax), s	7.1	* 42		28.1	5.0	43.2		24.1
Max Q Clear Time (g_c+I1), s	7.5	40.6		25.5	4.7	34.0		21.3
Green Ext Time (p_c), s	0.0	0.9		0.9	0.0	6.5		0.9

Intersection Summary	
HCM 2010 Ctrl Delay	51.6
HCM 2010 LOS	D

Notes

User approved volume balancing among the lanes for turning movement.

Movement	EBL	EBT	EBR	WBL	WBT	WBR	NBL	NBT	NBR	SBL	SBT	SBR
Lane Configurations												
Volume (veh/h)	489	576	36	5	706	69	114	20	4	15	0	67
Number	5	2	12	1	6	16	3	8	18	7	4	14
Initial Q (Qb), veh	0	0	0	0	0	0	0	0	0	0	0	0
Ped-Bike Adj(A_pbT)	1.00		1.00	1.00		1.00	1.00		1.00	1.00		1.00
Parking Bus, Adj	1.00	1.00	1.00	1.00	1.00	1.00	1.00	1.00	1.00	1.00	1.00	1.00
Adj Sat Flow, veh/h/ln	1863	1863	1900	1863	1863	1900	1900	1863	1900	1900	1863	1863
Adj Flow Rate, veh/h	582	686	43	6	840	82	136	24	5	18	0	80
Adj No. of Lanes	1	2	0	1	2	0	0	1	0	0	1	1
Peak Hour Factor	0.84	0.84	0.84	0.84	0.84	0.84	0.84	0.84	0.84	0.84	0.84	0.84
Percent Heavy Veh, %	2	2	2	2	2	2	2	2	2	2	2	2
Cap, veh/h	604	2538	159	10	1355	132	197	27	6	267	0	768
Arrive On Green	0.34	0.75	0.75	0.01	0.42	0.42	0.14	0.14	0.14	0.14	0.00	0.14
Sat Flow, veh/h	1774	3383	212	1774	3258	318	1057	187	39	1517	0	1583
Grp Volume(v), veh/h	582	359	370	6	456	466	165	0	0	18	0	80
Grp Sat Flow(s),veh/h/ln	1774	1770	1825	1774	1770	1807	1283	0	0	1517	0	1583
Q Serve(g_s), s	48.3	9.5	9.5	0.5	30.4	30.4	17.6	0.0	0.0	0.0	0.0	4.1
Cycle Q Clear(g_c), s	48.3	9.5	9.5	0.5	30.4	30.4	19.2	0.0	0.0	1.5	0.0	4.1
Prop In Lane	1.00		0.12	1.00		0.18	0.82		0.03	1.00		1.00
Lane Grp Cap(c), veh/h	604	1328	1370	10	736	751	229	0	0	267	0	768
V/C Ratio(X)	0.96	0.27	0.27	0.57	0.62	0.62	0.72	0.00	0.00	0.07	0.00	0.10
Avail Cap(c_a), veh/h	705	1328	1370	47	736	751	297	0	0	335	0	846
HCM Platoon Ratio	1.00	1.00	1.00	1.00	1.00	1.00	1.00	1.00	1.00	1.00	1.00	1.00
Upstream Filter(I)	1.00	1.00	1.00	1.00	1.00	1.00	1.00	0.00	0.00	1.00	0.00	1.00
Uniform Delay (d), s/veh	48.6	5.9	5.9	74.4	34.5	34.5	63.8	0.0	0.0	55.5	0.0	21.0
Incr Delay (d2), s/veh	22.5	0.5	0.5	17.0	3.9	3.8	3.6	0.0	0.0	0.0	0.0	0.0
Initial Q Delay(d3),s/veh	0.0	0.0	0.0	0.0	0.0	0.0	0.0	0.0	0.0	0.0	0.0	0.0
%ile BackOfQ(50%),veh/ln	27.4	4.8	4.9	0.3	15.6	15.9	7.0	0.0	0.0	0.6	0.0	1.8
LnGrp Delay(d),s/veh	71.1	6.4	6.4	91.4	38.4	38.3	67.4	0.0	0.0	55.6	0.0	21.0
LnGrp LOS	E	A	A	F	D	D	E			E		C
Approach Vol, veh/h		1311			928			165			98	
Approach Delay, s/veh		35.1			38.7			67.4			27.3	
Approach LOS		D			D			E			C	

Timer	1	2	3	4	5	6	7	8
Assigned Phs	1	2		4	5	6		8
Phs Duration (G+Y+Rc), s	5.3	118.1		26.6	55.5	68.0		26.6
Change Period (Y+Rc), s	4.4	* 5.6		4.9	4.4	5.6		4.9
Max Green Setting (Gmax), s	4.0	* 1E2		29.1	59.6	46.4		29.1
Max Q Clear Time (g_c+I1), s	2.5	11.5		6.1	50.3	32.4		21.2
Green Ext Time (p_c), s	0.0	54.7		0.8	0.8	12.4		0.5

Intersection Summary	
HCM 2010 Ctrl Delay	38.3
HCM 2010 LOS	D

Notes

* HCM 2010 computational engine requires equal clearance times for the phases crossing the barrier.

Intersection	
Int Delay, s/veh	2.1

Movement	EBT	EBR	WBL	WBT	NBL	NBR
Vol, veh/h	611	18	34	712	48	38
Conflicting Peds, #/hr	0	18	0	0	0	0
Sign Control	Free	Free	Free	Free	Stop	Stop
RT Channelized	-	None	-	None	-	None
Storage Length	-	-	100	-	0	-
Veh in Median Storage, #	0	-	-	0	0	-
Grade, %	0	-	-	0	0	-
Peak Hour Factor	84	84	84	84	84	84
Heavy Vehicles, %	2	2	2	2	2	2
Mvmt Flow	727	21	40	848	57	45

Major/Minor	Major1		Major2		Minor1	
Conflicting Flow All	0	0	749	0	1243	374
Stage 1	-	-	-	-	738	-
Stage 2	-	-	-	-	505	-
Critical Hdwy	-	-	4.14	-	6.84	6.94
Critical Hdwy Stg 1	-	-	-	-	5.84	-
Critical Hdwy Stg 2	-	-	-	-	5.84	-
Follow-up Hdwy	-	-	2.22	-	3.52	3.32
Pot Cap-1 Maneuver	-	-	856	-	167	623
Stage 1	-	-	-	-	434	-
Stage 2	-	-	-	-	571	-
Platoon blocked, %	-	-		-		
Mov Cap-1 Maneuver	-	-	856	-	157	623
Mov Cap-2 Maneuver	-	-	-	-	157	-
Stage 1	-	-	-	-	434	-
Stage 2	-	-	-	-	536	-

Approach	EB	WB	NB
HCM Control Delay, s	0	0.4	31.6
HCM LOS			D

Minor Lane/Major Mvmt	NBLn1	EBT	EBR	WBL	WBT
Capacity (veh/h)	235	-	-	856	-
HCM Lane V/C Ratio	0.436	-	-	0.047	-
HCM Control Delay (s)	31.6	-	-	9.4	-
HCM Lane LOS	D	-	-	A	-
HCM 95th %tile Q(veh)	2.1	-	-	0.1	-

Movement	EBL	EBT	EBR	WBL	WBT	WBR	NBL	NBT	NBR	SBL	SBT	SBR
Lane Configurations												
Volume (veh/h)	281	583	16	4	878	264	53	6	27	24	2	44
Number	5	2	12	1	6	16	3	8	18	7	4	14
Initial Q (Qb), veh	0	0	0	0	0	0	0	0	0	0	0	0
Ped-Bike Adj(A_pbT)	1.00		0.97	1.00		0.98	1.00		0.98	1.00		0.88
Parking Bus, Adj	1.00	1.00	1.00	1.00	1.00	1.00	1.00	1.00	1.00	1.00	1.00	1.00
Adj Sat Flow, veh/h/ln	1863	1863	1900	1863	1863	1863	1863	1863	1900	1863	1863	1863
Adj Flow Rate, veh/h	331	686	19	5	1033	311	62	7	32	29	0	52
Adj No. of Lanes	1	2	0	1	2	1	1	1	0	2	0	1
Peak Hour Factor	0.85	0.85	0.85	0.85	0.85	0.85	0.85	0.85	0.85	0.85	0.85	0.85
Percent Heavy Veh, %	2	2	2	2	2	2	2	2	2	2	2	2
Cap, veh/h	359	2217	61	352	1375	902	81	13	60	665	0	261
Arrive On Green	0.20	0.63	0.63	0.52	0.52	0.52	0.05	0.05	0.05	0.19	0.00	0.19
Sat Flow, veh/h	1774	3515	97	739	3539	1557	1774	287	1310	3548	0	1393
Grp Volume(v), veh/h	331	345	360	5	1033	311	62	0	39	29	0	52
Grp Sat Flow(s),veh/h/ln	1774	1770	1842	739	1770	1557	1774	0	1597	1774	0	1393
Q Serve(g_s), s	20.1	9.8	9.9	0.4	25.4	10.0	3.8	0.0	2.6	0.7	0.0	3.5
Cycle Q Clear(g_c), s	20.1	9.8	9.9	0.4	25.4	10.0	3.8	0.0	2.6	0.7	0.0	3.5
Prop In Lane	1.00		0.05	1.00		1.00	1.00		0.82	1.00		1.00
Lane Grp Cap(c), veh/h	359	1116	1162	352	1375	902	81	0	73	665	0	261
V/C Ratio(X)	0.92	0.31	0.31	0.01	0.75	0.34	0.77	0.00	0.54	0.04	0.00	0.20
Avail Cap(c_a), veh/h	381	1116	1162	352	1375	902	81	0	73	871	0	342
HCM Platoon Ratio	1.00	1.00	1.00	1.33	1.33	1.33	1.00	1.00	1.00	1.00	1.00	1.00
Upstream Filter(I)	1.00	1.00	1.00	1.00	1.00	1.00	1.00	0.00	1.00	1.00	0.00	1.00
Uniform Delay (d), s/veh	43.0	9.3	9.3	16.3	22.4	9.5	51.9	0.0	51.4	36.6	0.0	37.7
Incr Delay (d2), s/veh	26.4	0.7	0.7	0.0	2.4	0.3	35.3	0.0	7.6	0.0	0.0	0.1
Initial Q Delay(d3),s/veh	0.0	0.0	0.0	0.0	0.0	0.0	0.0	0.0	0.0	0.0	0.0	0.0
%ile BackOfQ(50%),veh/ln	12.5	5.0	5.2	0.1	12.8	6.2	2.7	0.0	1.3	0.4	0.0	1.3
LnGrp Delay(d),s/veh	69.4	10.0	10.0	16.4	24.8	9.8	87.3	0.0	59.0	36.6	0.0	37.9
LnGrp LOS	E	B	B	B	C	A	F		E	D		D
Approach Vol, veh/h		1036			1349			101			81	
Approach Delay, s/veh		29.0			21.3			76.3			37.4	
Approach LOS		C			C			E			D	

Timer	1	2	3	4	5	6	7	8
Assigned Phs		2		4	5	6		8
Phs Duration (G+Y+Rc), s		75.5		25.5	26.7	48.8		9.0
Change Period (Y+Rc), s		* 6.1		4.9	4.4	6.1		4.0
Max Green Setting (Gmax), s		* 64		27.0	23.6	35.0		5.0
Max Q Clear Time (g_c+I1), s		11.9		5.5	22.1	27.4		5.8
Green Ext Time (p_c), s		26.1		0.1	0.1	6.4		0.0

Intersection Summary	
HCM 2010 Ctrl Delay	27.1
HCM 2010 LOS	C

Notes

User approved volume balancing among the lanes for turning movement.

Intersection	
Int Delay, s/veh	1.3

Movement	EBL	EBT	WBT	WBR	SBL	SBR
Vol, veh/h	42	592	1094	18	12	52
Conflicting Peds, #/hr	0	0	0	3	0	0
Sign Control	Free	Free	Free	Free	Stop	Stop
RT Channelized	-	None	-	None	-	None
Storage Length	140	-	-	-	0	-
Veh in Median Storage, #	-	0	0	-	0	-
Grade, %	-	0	0	-	0	-
Peak Hour Factor	87	87	87	87	87	87
Heavy Vehicles, %	2	2	2	2	2	2
Mvmt Flow	48	680	1257	21	14	60

Major/Minor	Major1		Major2		Minor2	
Conflicting Flow All	1278	0	-	0	1705	639
Stage 1	-	-	-	-	1268	-
Stage 2	-	-	-	-	437	-
Critical Hdwy	4.14	-	-	-	6.84	6.94
Critical Hdwy Stg 1	-	-	-	-	5.84	-
Critical Hdwy Stg 2	-	-	-	-	5.84	-
Follow-up Hdwy	2.22	-	-	-	3.52	3.32
Pot Cap-1 Maneuver	539	-	-	-	82	419
Stage 1	-	-	-	-	228	-
Stage 2	-	-	-	-	619	-
Platoon blocked, %		-	-	-		
Mov Cap-1 Maneuver	539	-	-	-	75	419
Mov Cap-2 Maneuver	-	-	-	-	75	-
Stage 1	-	-	-	-	228	-
Stage 2	-	-	-	-	564	-

Approach	EB	WB	SB
HCM Control Delay, s	0.8	0	28.6
HCM LOS			D

Minor Lane/Major Mvmt	EBL	EBT	WBT	WBR	SBLn1
Capacity (veh/h)	539	-	-	-	225
HCM Lane V/C Ratio	0.09	-	-	-	0.327
HCM Control Delay (s)	12.3	-	-	-	28.6
HCM Lane LOS	B	-	-	-	D
HCM 95th %tile Q(veh)	0.3	-	-	-	1.4

Movement	EBL	EBT	EBR	WBL	WBT	WBR	NBL	NBT	NBR	SBL	SBT	SBR
Lane Configurations												
Volume (veh/h)	14	560	30	126	872	21	165	20	297	40	53	75
Number	5	2	12	1	6	16	3	8	18	7	4	14
Initial Q (Qb), veh	0	0	0	0	0	0	0	0	0	0	0	0
Ped-Bike Adj(A_pbT)	1.00		0.98	1.00		0.97	1.00		0.97	1.00		1.00
Parking Bus, Adj	1.00	1.00	1.00	1.00	1.00	1.00	1.00	1.00	1.00	1.00	1.00	1.00
Adj Sat Flow, veh/h/ln	1863	1863	1863	1863	1863	1900	1863	1863	1863	1863	1863	1863
Adj Flow Rate, veh/h	17	691	37	156	1077	26	204	25	367	49	65	93
Adj No. of Lanes	1	2	1	1	2	0	1	1	1	1	1	1
Peak Hour Factor	0.81	0.81	0.81	0.81	0.81	0.81	0.81	0.81	0.81	0.81	0.81	0.81
Percent Heavy Veh, %	2	2	2	2	2	2	2	2	2	2	2	2
Cap, veh/h	26	1529	671	185	1840	44	233	448	535	63	269	229
Arrive On Green	0.03	0.86	0.86	0.10	0.52	0.52	0.13	0.24	0.24	0.04	0.14	0.14
Sat Flow, veh/h	1774	3539	1553	1774	3529	85	1774	1863	1542	1774	1863	1583
Grp Volume(v), veh/h	17	691	37	156	540	563	204	25	367	49	65	93
Grp Sat Flow(s),veh/h/ln	1774	1770	1553	1774	1770	1845	1774	1863	1542	1774	1863	1583
Q Serve(g_s), s	1.0	4.8	0.4	9.5	23.1	23.1	12.4	1.1	22.5	3.0	3.4	5.9
Cycle Q Clear(g_c), s	1.0	4.8	0.4	9.5	23.1	23.1	12.4	1.1	22.5	3.0	3.4	5.9
Prop In Lane	1.00		1.00	1.00		0.05	1.00		1.00	1.00		1.00
Lane Grp Cap(c), veh/h	26	1529	671	185	923	962	233	448	535	63	269	229
V/C Ratio(X)	0.65	0.45	0.06	0.85	0.59	0.59	0.88	0.06	0.69	0.78	0.24	0.41
Avail Cap(c_a), veh/h	65	1529	671	219	923	962	252	586	650	108	440	374
HCM Platoon Ratio	2.00	2.00	2.00	1.00	1.00	1.00	1.00	1.00	1.00	1.00	1.00	1.00
Upstream Filter(I)	1.00	1.00	1.00	1.00	1.00	1.00	1.00	1.00	1.00	1.00	1.00	1.00
Uniform Delay (d), s/veh	53.1	4.6	4.3	48.4	18.1	18.1	46.9	32.2	31.0	52.6	41.7	42.8
Incr Delay (d2), s/veh	9.7	1.0	0.2	19.5	2.7	2.6	24.8	0.0	1.4	7.6	0.2	0.4
Initial Q Delay(d3),s/veh	0.0	0.0	0.0	0.0	0.0	0.0	0.0	0.0	0.0	0.0	0.0	0.0
%ile BackOfQ(50%),veh/ln	0.6	2.3	0.2	5.7	11.9	12.4	7.7	0.6	9.8	1.6	1.8	2.6
LnGrp Delay(d),s/veh	62.8	5.5	4.4	67.9	20.8	20.7	71.7	32.2	32.5	60.2	41.9	43.2
LnGrp LOS	E	A	A	E	C	C	E	C	C	E	D	D
Approach Vol, veh/h		745			1259			596			207	
Approach Delay, s/veh		6.8			26.6			45.9			46.8	
Approach LOS		A			C			D			D	

Timer	1	2	3	4	5	6	7	8
Assigned Phs	1	2	3	4	5	6	7	8
Phs Duration (G+Y+Rc), s	15.8	54.2	18.8	21.1	6.0	64.1	8.3	31.6
Change Period (Y+Rc), s	4.4	* 6.7	4.4	* 5.2	4.4	6.7	4.4	5.2
Max Green Setting (Gmax), s	13.6	* 35	15.6	* 26	4.0	44.0	6.7	34.6
Max Q Clear Time (g_c+I1), s	11.5	6.8	14.4	7.9	3.0	25.1	5.0	24.5
Green Ext Time (p_c), s	0.0	10.6	0.0	1.1	0.0	8.9	0.0	1.0

Intersection Summary	
HCM 2010 Ctrl Delay	26.9
HCM 2010 LOS	C

Notes

* HCM 2010 computational engine requires equal clearance times for the phases crossing the barrier.

Movement	EBL	EBT	EBR	WBL	WBT	WBR	NBL	NBT	NBR	SBL	SBT	SBR
Lane Configurations												
Volume (veh/h)	33	63	83	94	28	66	12	691	76	63	807	17
Number	7	4	14	3	8	18	5	2	12	1	6	16
Initial Q (Qb), veh	0	0	0	0	0	0	0	0	0	0	0	0
Ped-Bike Adj(A_pbT)	0.99		0.95	0.97		0.99	1.00		0.96	1.00		0.96
Parking Bus, Adj	1.00	1.00	1.00	1.00	1.00	1.00	1.00	1.00	1.00	1.00	1.00	1.00
Adj Sat Flow, veh/h/ln	1900	1863	1900	1900	1863	1900	1863	1863	1900	1863	1863	1900
Adj Flow Rate, veh/h	40	76	100	113	34	80	14	833	92	76	972	20
Adj No. of Lanes	0	1	0	0	1	0	1	2	0	1	2	0
Peak Hour Factor	0.83	0.83	0.83	0.83	0.83	0.83	0.83	0.83	0.83	0.83	0.83	0.83
Percent Heavy Veh, %	2	2	2	2	2	2	2	2	2	2	2	2
Cap, veh/h	114	185	202	252	86	139	24	1437	159	97	1736	36
Arrive On Green	0.27	0.27	0.27	0.27	0.27	0.27	0.01	0.45	0.45	0.05	0.49	0.49
Sat Flow, veh/h	182	690	752	630	320	517	1774	3198	353	1774	3543	73
Grp Volume(v), veh/h	216	0	0	227	0	0	14	461	464	76	485	507
Grp Sat Flow(s),veh/h/ln	1623	0	0	1468	0	0	1774	1770	1781	1774	1770	1847
Q Serve(g_s), s	0.0	0.0	0.0	0.9	0.0	0.0	0.5	12.6	12.6	2.8	12.5	12.5
Cycle Q Clear(g_c), s	7.0	0.0	0.0	7.9	0.0	0.0	0.5	12.6	12.6	2.8	12.5	12.5
Prop In Lane	0.19		0.46	0.50		0.35	1.00		0.20	1.00		0.04
Lane Grp Cap(c), veh/h	501	0	0	477	0	0	24	795	800	97	867	905
V/C Ratio(X)	0.43	0.00	0.00	0.48	0.00	0.00	0.57	0.58	0.58	0.79	0.56	0.56
Avail Cap(c_a), veh/h	708	0	0	659	0	0	109	795	800	115	867	905
HCM Platoon Ratio	1.00	1.00	1.00	1.00	1.00	1.00	1.00	1.00	1.00	1.00	1.00	1.00
Upstream Filter(I)	1.00	0.00	0.00	1.00	0.00	0.00	1.00	1.00	1.00	0.94	0.94	0.94
Uniform Delay (d), s/veh	20.0	0.0	0.0	20.2	0.0	0.0	31.9	13.3	13.3	30.4	11.6	11.6
Incr Delay (d2), s/veh	0.2	0.0	0.0	0.3	0.0	0.0	7.7	3.1	3.1	20.1	2.4	2.3
Initial Q Delay(d3),s/veh	0.0	0.0	0.0	0.0	0.0	0.0	0.0	0.0	0.0	0.0	0.0	0.0
%ile BackOfQ(50%),veh/ln	3.3	0.0	0.0	3.5	0.0	0.0	0.3	6.8	6.9	1.9	6.7	6.9
LnGrp Delay(d),s/veh	20.2	0.0	0.0	20.4	0.0	0.0	39.5	16.4	16.4	50.4	14.1	14.0
LnGrp LOS	C			C			D	B	B	D	B	B
Approach Vol, veh/h		216			227			939			1068	
Approach Delay, s/veh		20.2			20.4			16.7			16.6	
Approach LOS		C			C			B			B	

Timer	1	2	3	4	5	6	7	8
Assigned Phs	1	2		4	5	6		8
Phs Duration (G+Y+Rc), s	7.9	34.7		22.4	5.3	37.4		22.4
Change Period (Y+Rc), s	4.4	* 5.5		4.9	4.4	5.5		4.9
Max Green Setting (Gmax), s	4.3	* 20		26.1	4.0	20.1		26.1
Max Q Clear Time (g_c+I1), s	4.8	14.6		9.0	2.5	14.5		9.9
Green Ext Time (p_c), s	0.0	5.1		1.8	0.0	5.1		1.8

Intersection Summary	
HCM 2010 Ctrl Delay	17.3
HCM 2010 LOS	B

Notes

* HCM 2010 computational engine requires equal clearance times for the phases crossing the barrier.

Movement	EBL	EBT	EBR	WBL	WBT	WBR	NBL	NBT	NBR	SBL	SBT	SBR
Lane Configurations												
Volume (veh/h)	108	107	105	40	63	39	78	543	34	72	604	42
Number	7	4	14	3	8	18	5	2	12	1	6	16
Initial Q (Qb), veh	0	0	0	0	0	0	0	0	0	0	0	0
Ped-Bike Adj(A_pbT)	0.99		0.97	0.99		0.97	1.00		0.95	1.00		0.95
Parking Bus, Adj	1.00	1.00	1.00	1.00	1.00	1.00	1.00	1.00	1.00	1.00	1.00	1.00
Adj Sat Flow, veh/h/ln	1863	1863	1900	1863	1863	1900	1863	1863	1900	1863	1863	1900
Adj Flow Rate, veh/h	121	120	118	45	71	44	88	610	38	81	679	47
Adj No. of Lanes	1	1	0	1	1	0	1	2	0	1	2	0
Peak Hour Factor	0.89	0.89	0.89	0.89	0.89	0.89	0.89	0.89	0.89	0.89	0.89	0.89
Percent Heavy Veh, %	2	2	2	2	2	2	2	2	2	2	2	2
Cap, veh/h	350	221	217	245	276	171	113	1687	105	104	1657	115
Arrive On Green	0.26	0.26	0.26	0.26	0.26	0.26	0.06	0.50	0.50	0.06	0.50	0.50
Sat Flow, veh/h	1256	849	835	1126	1063	659	1774	3373	210	1774	3345	231
Grp Volume(v), veh/h	121	0	238	45	0	115	88	320	328	81	359	367
Grp Sat Flow(s),veh/h/ln	1256	0	1683	1126	0	1722	1774	1770	1813	1774	1770	1807
Q Serve(g_s), s	6.8	0.0	9.7	2.9	0.0	4.2	3.9	8.8	8.8	3.6	10.3	10.3
Cycle Q Clear(g_c), s	11.0	0.0	9.7	12.6	0.0	4.2	3.9	8.8	8.8	3.6	10.3	10.3
Prop In Lane	1.00		0.50	1.00		0.38	1.00		0.12	1.00		0.13
Lane Grp Cap(c), veh/h	350	0	438	245	0	448	113	885	907	104	876	895
V/C Ratio(X)	0.35	0.00	0.54	0.18	0.00	0.26	0.78	0.36	0.36	0.78	0.41	0.41
Avail Cap(c_a), veh/h	526	0	673	403	0	689	191	885	907	204	876	895
HCM Platoon Ratio	1.00	1.00	1.00	1.00	1.00	1.00	1.00	1.00	1.00	1.00	1.00	1.00
Upstream Filter(I)	1.00	0.00	1.00	1.00	0.00	1.00	0.82	0.82	0.82	0.91	0.91	0.91
Uniform Delay (d), s/veh	27.8	0.0	25.5	31.0	0.0	23.5	36.9	12.2	12.2	37.1	12.8	12.8
Incr Delay (d2), s/veh	0.2	0.0	0.4	0.1	0.0	0.1	3.6	0.9	0.9	4.2	1.3	1.3
Initial Q Delay(d3),s/veh	0.0	0.0	0.0	0.0	0.0	0.0	0.0	0.0	0.0	0.0	0.0	0.0
%ile BackOfQ(50%),veh/ln	2.4	0.0	4.5	0.9	0.0	2.0	2.0	4.5	4.6	1.9	5.3	5.4
LnGrp Delay(d),s/veh	28.1	0.0	25.9	31.1	0.0	23.6	40.5	13.1	13.1	41.4	14.1	14.1
LnGrp LOS	C		C	C		C	D	B	B	D	B	B
Approach Vol, veh/h		359			160			736			807	
Approach Delay, s/veh		26.6			25.7			16.4			16.8	
Approach LOS		C			C			B			B	

Timer	1	2	3	4	5	6	7	8
Assigned Phs	1	2		4	5	6		8
Phs Duration (G+Y+Rc), s	9.1	45.2		25.7	9.5	44.8		25.7
Change Period (Y+Rc), s	4.4	5.2		4.9	4.4	* 5.2		4.9
Max Green Setting (Gmax), s	9.3	24.3		32.0	8.6	* 25		32.0
Max Q Clear Time (g_c+I1), s	5.6	10.8		13.0	5.9	12.3		14.6
Green Ext Time (p_c), s	0.0	7.5		1.7	0.0	7.3		1.6

Intersection Summary	
HCM 2010 Ctrl Delay	19.1
HCM 2010 LOS	B

Notes

* HCM 2010 computational engine requires equal clearance times for the phases crossing the barrier.

Movement	EBL	EBT	EBR	WBL	WBT	WBR	NBL	NBT	NBR	SBL	SBT	SBR
Lane Configurations												
Volume (veh/h)	149	119	56	55	141	304	65	749	51	192	706	44
Number	7	4	14	3	8	18	5	2	12	1	6	16
Initial Q (Qb), veh	0	0	0	0	0	0	0	0	0	0	0	0
Ped-Bike Adj(A_pbT)	0.97		0.98	0.99		0.93	1.00		0.96	1.00		0.97
Parking Bus, Adj	1.00	1.00	1.00	1.00	1.00	1.00	1.00	1.00	1.00	1.00	1.00	1.00
Adj Sat Flow, veh/h/ln	1863	1863	1900	1863	1863	1863	1863	1863	1900	1863	1863	1900
Adj Flow Rate, veh/h	164	131	62	60	155	334	71	823	56	211	776	48
Adj No. of Lanes	1	1	0	1	1	1	1	2	0	1	2	0
Peak Hour Factor	0.91	0.91	0.91	0.91	0.91	0.91	0.91	0.91	0.91	0.91	0.91	0.91
Percent Heavy Veh, %	2	2	2	2	2	2	2	2	2	2	2	2
Cap, veh/h	335	394	187	390	619	490	91	1219	83	203	1443	89
Arrive On Green	0.33	0.33	0.33	0.33	0.33	0.33	0.05	0.36	0.36	0.11	0.43	0.43
Sat Flow, veh/h	880	1187	562	1177	1863	1474	1774	3353	228	1774	3379	209
Grp Volume(v), veh/h	164	0	193	60	155	334	71	434	445	211	406	418
Grp Sat Flow(s),veh/h/ln	880	0	1748	1177	1863	1474	1774	1770	1812	1774	1770	1818
Q Serve(g_s), s	12.5	0.0	6.2	3.0	4.5	14.7	3.0	15.5	15.5	8.6	12.8	12.8
Cycle Q Clear(g_c), s	17.1	0.0	6.2	9.2	4.5	14.7	3.0	15.5	15.5	8.6	12.8	12.8
Prop In Lane	1.00		0.32	1.00		1.00	1.00		0.13	1.00		0.11
Lane Grp Cap(c), veh/h	335	0	581	390	619	490	91	643	659	203	756	776
V/C Ratio(X)	0.49	0.00	0.33	0.15	0.25	0.68	0.78	0.67	0.68	1.04	0.54	0.54
Avail Cap(c_a), veh/h	371	0	653	438	695	550	125	643	659	203	756	776
HCM Platoon Ratio	1.00	1.00	1.00	1.00	1.00	1.00	1.00	1.00	1.00	1.00	1.00	1.00
Upstream Filter(I)	1.00	0.00	1.00	1.00	1.00	1.00	0.94	0.94	0.94	0.19	0.19	0.19
Uniform Delay (d), s/veh	24.4	0.0	18.8	22.3	18.2	21.6	35.2	20.1	20.1	33.2	16.0	16.0
Incr Delay (d2), s/veh	0.4	0.0	0.1	0.1	0.1	2.1	12.1	5.3	5.2	37.4	0.5	0.5
Initial Q Delay(d3),s/veh	0.0	0.0	0.0	0.0	0.0	0.0	0.0	0.0	0.0	0.1	0.0	0.0
%ile BackOfQ(50%),veh/ln	8.1	0.0	3.0	1.0	2.3	6.2	1.8	8.5	8.7	6.3	6.3	6.5
LnGrp Delay(d),s/veh	24.9	0.0	18.9	22.3	18.3	23.8	47.3	25.4	25.3	70.7	16.5	16.5
LnGrp LOS	C		B	C	B	C	D	C	C	F	B	B
Approach Vol, veh/h		357			549			950			1035	
Approach Delay, s/veh		21.6			22.1			27.0			27.5	
Approach LOS		C			C			C			C	

Timer	1	2	3	4	5	6	7	8
Assigned Phs	1	2		4	5	6		8
Phs Duration (G+Y+Rc), s	13.0	32.2		29.8	8.2	36.9		29.8
Change Period (Y+Rc), s	4.4	4.9		4.9	4.4	4.9		4.9
Max Green Setting (Gmax), s	8.6	24.2		28.0	5.3	27.5		28.0
Max Q Clear Time (g_c+I1), s	10.6	17.5		19.1	5.0	14.8		16.7
Green Ext Time (p_c), s	0.0	6.3		2.1	0.0	11.7		2.4

Intersection Summary	
HCM 2010 Ctrl Delay	25.6
HCM 2010 LOS	C

Movement	EBL	EBT	EBR	WBL	WBT	WBR	NBL	NBT	NBR	SBL	SBT	SBR
Lane Configurations												
Volume (veh/h)	154	714	272	532	589	291	311	606	546	150	468	122
Number	5	2	12	1	6	16	3	8	18	7	4	14
Initial Q (Qb), veh	0	0	0	0	0	0	0	0	0	0	0	0
Ped-Bike Adj(A_pbT)	1.00		0.97	1.00		0.98	1.00		0.96	1.00		0.85
Parking Bus, Adj	1.00	1.00	1.00	1.00	1.00	1.00	1.00	1.00	1.00	1.00	1.00	1.00
Adj Sat Flow, veh/h/ln	1863	1863	1863	1863	1863	1863	1863	1863	1863	1863	1863	1900
Adj Flow Rate, veh/h	167	776	296	578	640	316	338	659	593	163	509	133
Adj No. of Lanes	1	2	1	2	2	1	1	2	1	2	2	0
Peak Hour Factor	0.92	0.92	0.92	0.92	0.92	0.92	0.92	0.92	0.92	0.92	0.92	0.92
Percent Heavy Veh, %	2	2	2	2	2	2	2	2	2	2	2	2
Cap, veh/h	191	900	392	620	1158	509	359	1369	590	157	616	159
Arrive On Green	0.11	0.25	0.25	0.18	0.33	0.33	0.20	0.39	0.39	0.05	0.23	0.23
Sat Flow, veh/h	1774	3539	1540	3442	3539	1555	1774	3539	1525	3442	2677	692
Grp Volume(v), veh/h	167	776	296	578	640	316	338	659	593	163	335	307
Grp Sat Flow(s),veh/h/ln	1774	1770	1540	1721	1770	1555	1774	1770	1525	1721	1770	1599
Q Serve(g_s), s	13.4	30.4	25.7	24.0	21.5	24.9	27.2	20.3	56.1	6.6	26.0	26.6
Cycle Q Clear(g_c), s	13.4	30.4	25.7	24.0	21.5	24.9	27.2	20.3	56.1	6.6	26.0	26.6
Prop In Lane	1.00		1.00	1.00		1.00	1.00		1.00	1.00		0.43
Lane Grp Cap(c), veh/h	191	900	392	620	1158	509	359	1369	590	157	407	368
V/C Ratio(X)	0.88	0.86	0.76	0.93	0.55	0.62	0.94	0.48	1.01	1.04	0.82	0.84
Avail Cap(c_a), veh/h	301	900	392	631	1158	509	374	1369	590	157	407	368
HCM Platoon Ratio	1.00	1.00	1.00	1.00	1.00	1.00	1.00	1.00	1.00	1.00	1.00	1.00
Upstream Filter(I)	1.00	1.00	1.00	1.00	1.00	1.00	0.73	0.73	0.73	1.00	1.00	1.00
Uniform Delay (d), s/veh	63.8	51.6	49.9	58.6	40.1	41.2	57.0	33.5	44.4	69.2	53.0	53.2
Incr Delay (d2), s/veh	10.2	10.6	12.7	20.3	1.9	5.6	25.0	0.9	33.0	83.0	16.8	19.6
Initial Q Delay(d3),s/veh	0.0	0.0	0.0	0.0	0.0	0.0	0.0	0.0	0.0	0.2	0.0	0.0
%ile BackOfQ(50%),veh/ln	7.1	16.2	12.3	13.1	10.8	11.5	15.8	10.1	29.0	4.9	14.6	13.8
LnGrp Delay(d),s/veh	74.0	62.3	62.6	78.9	42.0	46.8	82.0	34.4	77.4	152.4	69.8	72.8
LnGrp LOS	E	E	E	E	D	D	F	C	F	F	E	E
Approach Vol, veh/h		1239			1534			1590			805	
Approach Delay, s/veh		63.9			56.9			60.6			87.7	
Approach LOS		E			E			E			F	

Timer	1	2	3	4	5	6	7	8
Assigned Phs	1	2	3	4	5	6	7	8
Phs Duration (G+Y+Rc), s	30.5	42.2	33.7	38.6	20.0	52.7	11.0	61.3
Change Period (Y+Rc), s	4.4	5.3	4.4	5.2	4.4	5.3	4.4	* 5.2
Max Green Setting (Gmax), s	26.6	36.7	30.6	31.8	24.6	38.7	6.6	* 56
Max Q Clear Time (g_c+I1), s	26.0	32.4	29.2	28.6	15.4	26.9	8.6	58.1
Green Ext Time (p_c), s	0.1	4.0	0.1	3.0	0.1	10.2	0.0	0.0

Intersection Summary	
HCM 2010 Ctrl Delay	64.5
HCM 2010 LOS	E

Notes

* HCM 2010 computational engine requires equal clearance times for the phases crossing the barrier.

Movement	WBL	WBR	NBT	NBR	SBL	SBT
Lane Configurations						
Volume (veh/h)	363	239	1797	573	225	1049
Number	3	18	2	12	1	6
Initial Q (Qb), veh	0	0	0	0	0	0
Ped-Bike Adj(A_pbT)	1.00	1.00		0.98	1.00	
Parking Bus, Adj	1.00	1.00	1.00	1.00	1.00	1.00
Adj Sat Flow, veh/h/ln	1863	1863	1863	1863	1863	1863
Adj Flow Rate, veh/h	439	221	1975	630	247	1153
Adj No. of Lanes	2	1	2	1	2	2
Peak Hour Factor	0.91	0.91	0.91	0.91	0.91	0.91
Percent Heavy Veh, %	2	2	2	2	2	2
Cap, veh/h	555	248	2262	1236	296	2676
Arrive On Green	0.16	0.16	0.64	0.64	0.09	0.76
Sat Flow, veh/h	3548	1583	3632	1547	3442	3632
Grp Volume(v), veh/h	439	221	1975	630	247	1153
Grp Sat Flow(s),veh/h/ln	1774	1583	1770	1547	1721	1770
Q Serve(g_s), s	16.9	19.4	64.7	19.9	10.0	16.7
Cycle Q Clear(g_c), s	16.9	19.4	64.7	19.9	10.0	16.7
Prop In Lane	1.00	1.00		1.00	1.00	
Lane Grp Cap(c), veh/h	555	248	2262	1236	296	2676
V/C Ratio(X)	0.79	0.89	0.87	0.51	0.83	0.43
Avail Cap(c_a), veh/h	675	301	2262	1236	388	2779
HCM Platoon Ratio	1.00	1.00	1.00	1.00	1.00	1.00
Upstream Filter(I)	1.00	1.00	1.00	1.00	1.00	1.00
Uniform Delay (d), s/veh	57.6	58.7	20.9	5.0	63.8	6.3
Incr Delay (d2), s/veh	4.2	21.2	4.2	0.5	9.0	0.3
Initial Q Delay(d3),s/veh	0.0	0.0	0.0	0.0	0.0	0.0
%ile BackOfQ(50%),veh/ln	8.6	10.0	32.6	15.0	5.1	8.1
LnGrp Delay(d),s/veh	61.8	79.9	25.1	5.5	72.9	6.5
LnGrp LOS	E	E	C	A	E	A
Approach Vol, veh/h	660		2605			1400
Approach Delay, s/veh	67.8		20.4			18.2
Approach LOS	E		C			B

Timer	1	2	3	4	5	6	7	8
Assigned Phs	1	2				6		8
Phs Duration (G+Y+Rc), s	16.6	96.9				113.5		28.4
Change Period (Y+Rc), s	4.4	6.2				* 6.2		6.2
Max Green Setting (Gmax), s	15.0	90.2				* 1.1E2		27.0
Max Q Clear Time (g_c+I1), s	12.0	66.7				18.7		21.4
Green Ext Time (p_c), s	0.2	23.3				88.6		0.8

Intersection Summary	
HCM 2010 Ctrl Delay	26.4
HCM 2010 LOS	C

Notes

User approved volume balancing among the lanes for turning movement.

Movement	EBL	EBT	WBT	WBR	SBL	SBR
Lane Configurations						
Volume (veh/h)	423	631	529	544	301	52
Number	5	2	6	16	7	14
Initial Q (Qb), veh	0	0	0	0	0	0
Ped-Bike Adj(A_pbT)	1.00			1.00	1.00	1.00
Parking Bus, Adj	1.00	1.00	1.00	1.00	1.00	1.00
Adj Sat Flow, veh/h/ln	1863	1863	1863	1863	1863	1863
Adj Flow Rate, veh/h	542	809	678	697	386	67
Adj No. of Lanes	1	2	2	1	2	1
Peak Hour Factor	0.78	0.78	0.78	0.78	0.78	0.78
Percent Heavy Veh, %	2	2	2	2	2	2
Cap, veh/h	581	2547	1195	766	518	231
Arrive On Green	0.33	0.72	0.34	0.34	0.15	0.15
Sat Flow, veh/h	1774	3632	3632	1583	3548	1583
Grp Volume(v), veh/h	542	809	678	697	386	67
Grp Sat Flow(s),veh/h/ln	1774	1770	1770	1583	1774	1583
Q Serve(g_s), s	24.0	6.7	12.7	27.4	8.5	3.1
Cycle Q Clear(g_c), s	24.0	6.7	12.7	27.4	8.5	3.1
Prop In Lane	1.00			1.00	1.00	1.00
Lane Grp Cap(c), veh/h	581	2547	1195	766	518	231
V/C Ratio(X)	0.93	0.32	0.57	0.91	0.75	0.29
Avail Cap(c_a), veh/h	713	2792	1195	766	660	295
HCM Platoon Ratio	1.00	1.00	1.00	1.00	1.00	1.00
Upstream Filter(I)	1.00	1.00	1.00	1.00	1.00	1.00
Uniform Delay (d), s/veh	26.4	4.1	22.0	17.9	33.2	30.9
Incr Delay (d2), s/veh	15.7	0.1	0.8	15.2	5.4	1.5
Initial Q Delay(d3),s/veh	0.0	0.0	0.0	0.0	0.0	0.0
%ile BackOfQ(50%),veh/ln	14.3	3.3	6.4	18.7	4.5	2.9
LnGrp Delay(d),s/veh	42.1	4.3	22.8	33.1	38.6	32.4
LnGrp LOS	D	A	C	C	D	C
Approach Vol, veh/h		1351	1375		453	
Approach Delay, s/veh		19.4	28.0		37.7	
Approach LOS		B	C		D	

Timer	1	2	3	4	5	6	7	8
Assigned Phs		2		4	5	6		
Phs Duration (G+Y+Rc), s		64.4		16.7	31.0	33.4		
Change Period (Y+Rc), s		6.0		4.9	4.4	* 6		
Max Green Setting (Gmax), s		64.0		15.1	32.6	* 27		
Max Q Clear Time (g_c+I1), s		8.7		10.5	26.0	29.4		
Green Ext Time (p_c), s		37.9		1.4	0.6	0.0		

Intersection Summary	
HCM 2010 Ctrl Delay	25.8
HCM 2010 LOS	C

Notes

User approved volume balancing among the lanes for turning movement.

Movement	EBL	EBT	EBR	WBL	WBT	WBR	NBL	NBT	NBR	SBL	SBT	SBR
Lane Configurations												
Volume (veh/h)	147	869	8	14	1289	171	68	7	82	147	9	111
Number	5	2	12	1	6	16	3	8	18	7	4	14
Initial Q (Qb), veh	0	0	0	0	0	0	0	0	0	0	0	0
Ped-Bike Adj(A_pbT)	1.00		1.00	1.00		1.00	1.00		1.00	1.00		1.00
Parking Bus, Adj	1.00	1.00	1.00	1.00	1.00	1.00	1.00	1.00	1.00	1.00	1.00	1.00
Adj Sat Flow, veh/h/ln	1863	1863	1900	1863	1863	1900	1900	1863	1863	1863	1863	1900
Adj Flow Rate, veh/h	173	1022	9	16	1516	201	80	8	96	173	11	131
Adj No. of Lanes	1	2	0	1	2	0	0	1	1	1	1	0
Peak Hour Factor	0.85	0.85	0.85	0.85	0.85	0.85	0.85	0.85	0.85	0.85	0.85	0.85
Percent Heavy Veh, %	2	2	2	2	2	2	2	2	2	2	2	2
Cap, veh/h	201	2173	19	24	1589	208	271	24	406	222	32	379
Arrive On Green	0.11	0.60	0.60	0.01	0.50	0.50	0.26	0.26	0.26	0.26	0.26	0.26
Sat Flow, veh/h	1774	3595	32	1774	3148	412	836	95	1583	1285	124	1478
Grp Volume(v), veh/h	173	503	528	16	844	873	88	0	96	173	0	142
Grp Sat Flow(s),veh/h/ln	1774	1770	1857	1774	1770	1790	931	0	1583	1285	0	1602
Q Serve(g_s), s	11.7	19.2	19.2	1.1	55.0	57.5	7.0	0.0	5.9	15.4	0.0	8.8
Cycle Q Clear(g_c), s	11.7	19.2	19.2	1.1	55.0	57.5	15.9	0.0	5.9	31.3	0.0	8.8
Prop In Lane	1.00		0.02	1.00		0.23	0.91		1.00	1.00		0.92
Lane Grp Cap(c), veh/h	201	1069	1122	24	894	904	295	0	406	222	0	411
V/C Ratio(X)	0.86	0.47	0.47	0.66	0.94	0.97	0.30	0.00	0.24	0.78	0.00	0.35
Avail Cap(c_a), veh/h	343	1134	1190	80	894	904	295	0	406	222	0	411
HCM Platoon Ratio	1.00	1.00	1.00	1.00	1.00	1.00	1.00	1.00	1.00	1.00	1.00	1.00
Upstream Filter(I)	1.00	1.00	1.00	1.00	1.00	1.00	1.00	0.00	1.00	1.00	0.00	1.00
Uniform Delay (d), s/veh	53.2	13.3	13.3	59.9	28.6	29.2	43.0	0.0	35.9	53.7	0.0	37.0
Incr Delay (d2), s/veh	4.6	1.2	1.2	10.6	19.3	22.8	0.2	0.0	0.1	14.9	0.0	0.2
Initial Q Delay(d3),s/veh	0.0	0.0	0.0	0.0	0.0	0.0	0.0	0.0	0.0	0.0	0.0	0.0
%ile BackOfQ(50%),veh/ln	6.0	9.7	10.2	0.6	31.5	33.9	2.6	0.0	2.6	6.7	0.0	3.9
LnGrp Delay(d),s/veh	57.8	14.6	14.5	70.5	47.8	52.0	43.2	0.0	36.0	68.7	0.0	37.2
LnGrp LOS	E	B	B	E	D	D	D		D	E		D
Approach Vol, veh/h		1204			1733			184			315	
Approach Delay, s/veh		20.8			50.1			39.5			54.5	
Approach LOS		C			D			D			D	

Timer	1	2	3	4	5	6	7	8
Assigned Phs	1	2		4	5	6		8
Phs Duration (G+Y+Rc), s	6.1	79.7		36.2	18.2	67.6		36.2
Change Period (Y+Rc), s	4.4	* 6		4.9	4.4	6.0		4.9
Max Green Setting (Gmax), s	5.5	* 78		31.3	23.6	59.8		31.3
Max Q Clear Time (g_c+I1), s	13.1	21.2		33.3	13.7	59.5		17.9
Green Ext Time (p_c), s	0.0	52.6		0.0	0.1	0.3		1.2

Intersection Summary	
HCM 2010 Ctrl Delay	39.7
HCM 2010 LOS	D

Notes

* HCM 2010 computational engine requires equal clearance times for the phases crossing the barrier.

Movement	EBL	EBT	EBR	WBL	WBT	WBR	NBL	NBT	NBR	SBL	SBT	SBR
Lane Configurations												
Volume (veh/h)	251	439	248	435	736	446	166	82	251	260	106	173
Number	5	2	12	1	6	16	3	8	18	7	4	14
Initial Q (Qb), veh	0	0	0	0	0	0	0	0	0	0	0	0
Ped-Bike Adj(A_pbT)	1.00		1.00	1.00		0.98	1.00		1.00	1.00		1.00
Parking Bus, Adj	1.00	1.00	1.00	1.00	1.00	1.00	1.00	1.00	1.00	1.00	1.00	1.00
Adj Sat Flow, veh/h/ln	1863	1863	1863	1863	1863	1863	1863	1863	1863	1863	1863	1863
Adj Flow Rate, veh/h	285	499	270	473	836	507	180	89	273	295	115	197
Adj No. of Lanes	1	2	1	1	2	1	1	2	1	2	1	1
Peak Hour Factor	0.88	0.88	0.92	0.92	0.88	0.88	0.92	0.92	0.92	0.88	0.92	0.88
Percent Heavy Veh, %	2	2	2	2	2	2	2	2	2	2	2	2
Cap, veh/h	322	897	596	521	1293	749	219	526	700	392	259	507
Arrive On Green	0.18	0.25	0.25	0.29	0.37	0.37	0.12	0.15	0.15	0.11	0.14	0.14
Sat Flow, veh/h	1774	3539	1583	1774	3539	1557	1774	3539	1583	3442	1863	1580
Grp Volume(v), veh/h	285	499	270	473	836	507	180	89	273	295	115	197
Grp Sat Flow(s),veh/h/ln	1774	1770	1583	1774	1770	1557	1774	1770	1583	1721	1863	1580
Q Serve(g_s), s	14.8	11.6	12.1	24.2	18.5	23.8	9.3	2.1	11.0	7.8	5.3	9.1
Cycle Q Clear(g_c), s	14.8	11.6	12.1	24.2	18.5	23.8	9.3	2.1	11.0	7.8	5.3	9.1
Prop In Lane	1.00		1.00	1.00		1.00	1.00		1.00	1.00		1.00
Lane Grp Cap(c), veh/h	322	897	596	521	1293	749	219	526	700	392	259	507
V/C Ratio(X)	0.88	0.56	0.45	0.91	0.65	0.68	0.82	0.17	0.39	0.75	0.44	0.39
Avail Cap(c_a), veh/h	686	1211	737	1062	1961	1043	479	645	753	948	349	584
HCM Platoon Ratio	1.00	1.00	1.00	1.00	1.00	1.00	1.00	1.00	1.00	1.00	1.00	1.00
Upstream Filter(I)	1.00	1.00	1.00	1.00	1.00	1.00	1.00	1.00	1.00	1.00	1.00	1.00
Uniform Delay (d), s/veh	37.7	30.6	22.1	32.1	24.9	19.0	40.4	35.1	17.7	40.5	37.3	24.9
Incr Delay (d2), s/veh	3.2	0.3	0.3	6.4	0.2	0.4	7.5	0.2	0.4	2.9	0.4	0.2
Initial Q Delay(d3),s/veh	0.0	0.0	0.0	0.0	0.0	0.0	0.0	0.0	0.0	0.0	0.0	0.0
%ile BackOfQ(50%),veh/ln	7.5	5.7	5.3	12.8	9.1	10.2	5.1	1.0	4.8	3.9	2.8	4.0
LnGrp Delay(d),s/veh	40.9	31.0	22.4	38.5	25.1	19.4	47.9	35.2	18.1	43.5	37.7	25.1
LnGrp LOS	D	C	C	D	C	B	D	D	B	D	D	C
Approach Vol, veh/h		1054			1816			542			607	
Approach Delay, s/veh		31.5			27.0			30.8			36.4	
Approach LOS		C			C			C			D	

Timer	1	2	3	4	5	6	7	8
Assigned Phs	1	2	3	4	5	6	7	8
Phs Duration (G+Y+Rc), s	32.2	28.4	16.1	17.6	21.6	39.0	15.2	18.5
Change Period (Y+Rc), s	4.5	4.5	4.5	4.5	4.5	4.5	4.5	4.5
Max Green Setting (Gmax), s	56.5	32.3	25.5	17.7	36.5	52.3	26.0	17.2
Max Q Clear Time (g_c+I1), s	26.2	14.1	11.3	11.1	16.8	25.8	9.8	13.0
Green Ext Time (p_c), s	1.5	7.6	0.4	1.4	0.4	8.7	0.9	1.0

Intersection Summary	
HCM 2010 Ctrl Delay	30.1
HCM 2010 LOS	C

Movement	EBL	EBT	EBR	WBL	WBT	WBR	NBL	NBT	NBR	SBL	SBT	SBR
Lane Configurations												
Volume (veh/h)	0	613	252	351	1164	2	396	2	167	20	1	7
Number	5	2	12	1	6	16	3	8	18	7	4	14
Initial Q (Qb), veh	0	0	0	0	0	0	0	0	0	0	0	0
Ped-Bike Adj(A_pbT)	1.00		0.99	1.00		0.97	1.00		0.98	1.00		1.00
Parking Bus, Adj	1.00	1.00	1.00	1.00	1.00	1.00	1.00	1.00	1.00	1.00	1.00	1.00
Adj Sat Flow, veh/h/ln	1863	1863	1900	1863	1863	1900	1900	1863	1863	1900	1863	1900
Adj Flow Rate, veh/h	0	645	265	369	1225	2	417	2	176	21	1	7
Adj No. of Lanes	1	3	0	2	2	0	0	1	1	0	1	0
Peak Hour Factor	0.95	0.95	0.95	0.95	0.95	0.95	0.95	0.95	0.95	0.95	0.95	0.95
Percent Heavy Veh, %	2	2	2	2	2	2	2	2	2	2	2	2
Cap, veh/h	2	1355	546	446	2013	3	526	2	729	98	12	15
Arrive On Green	0.00	0.38	0.38	0.13	0.56	0.56	0.34	0.34	0.34	0.34	0.34	0.34
Sat Flow, veh/h	1774	3550	1429	3442	3625	6	1347	6	1557	106	36	45
Grp Volume(v), veh/h	0	615	295	369	598	629	419	0	176	29	0	0
Grp Sat Flow(s),veh/h/ln	1774	1695	1589	1721	1770	1861	1354	0	1557	187	0	0
Q Serve(g_s), s	0.0	13.7	14.1	10.5	22.7	22.7	0.0	0.0	6.8	1.1	0.0	0.0
Cycle Q Clear(g_c), s	0.0	13.7	14.1	10.5	22.7	22.7	29.9	0.0	6.8	31.0	0.0	0.0
Prop In Lane	1.00		0.90	1.00		0.00	1.00		1.00	0.72		0.24
Lane Grp Cap(c), veh/h	2	1294	606	446	982	1033	528	0	729	125	0	0
V/C Ratio(X)	0.00	0.48	0.49	0.83	0.61	0.61	0.79	0.00	0.24	0.23	0.00	0.00
Avail Cap(c_a), veh/h	71	1294	606	757	982	1033	546	0	750	142	0	0
HCM Platoon Ratio	1.00	1.00	1.00	1.00	1.00	1.00	1.00	1.00	1.00	1.00	1.00	1.00
Upstream Filter(I)	0.00	0.82	0.82	0.87	0.87	0.87	1.00	0.00	1.00	1.00	0.00	0.00
Uniform Delay (d), s/veh	0.0	23.4	23.5	42.4	14.9	14.9	31.9	0.0	16.1	32.7	0.0	0.0
Incr Delay (d2), s/veh	0.0	1.0	2.3	1.3	2.5	2.3	7.2	0.0	0.1	0.5	0.0	0.0
Initial Q Delay(d3),s/veh	0.0	0.0	0.0	0.0	0.0	0.0	0.0	0.0	0.0	0.0	0.0	0.0
%ile BackOfQ(50%),veh/ln	0.0	6.6	6.5	5.1	11.6	12.2	12.1	0.0	2.9	0.8	0.0	0.0
LnGrp Delay(d),s/veh	0.0	24.4	25.7	43.8	17.4	17.3	39.1	0.0	16.1	33.2	0.0	0.0
LnGrp LOS		C	C	D	B	B	D		B	C		
Approach Vol, veh/h		910			1596			595			29	
Approach Delay, s/veh		24.8			23.5			32.3			33.2	
Approach LOS		C			C			C			C	

Timer	1	2	3	4	5	6	7	8
Assigned Phs	1	2		4	5	6		8
Phs Duration (G+Y+Rc), s	17.4	44.1		38.6	0.0	61.4		38.6
Change Period (Y+Rc), s	4.4	5.9		4.9	4.4	* 5.9		4.9
Max Green Setting (Gmax), s	22.6	27.8		35.0	4.0	* 46		35.0
Max Q Clear Time (g_c+I1), s	12.5	16.1		33.0	0.0	24.7		31.9
Green Ext Time (p_c), s	0.5	9.4		0.6	0.0	15.4		0.8

Intersection Summary	
HCM 2010 Ctrl Delay	25.6
HCM 2010 LOS	C

Notes

* HCM 2010 computational engine requires equal clearance times for the phases crossing the barrier.

Movement	EBL	EBT	EBR	WBL	WBT	WBR	NBL	NBT	NBR	SBL	SBT	SBR
Lane Configurations												
Volume (veh/h)	9	792	8	38	1172	0	4	0	16	0	0	0
Number	5	2	12	1	6	16	3	8	18			
Initial Q (Qb), veh	0	0	0	0	0	0	0	0	0			
Ped-Bike Adj(A_pbT)	1.00		1.00	1.00		1.00	1.00		1.00			
Parking Bus, Adj	1.00	1.00	1.00	1.00	1.00	1.00	1.00	1.00	1.00			
Adj Sat Flow, veh/h/ln	1863	1863	1900	1863	1863	0	1863	0	1863			
Adj Flow Rate, veh/h	10	954	10	46	1412	0	5	0	19			
Adj No. of Lanes	1	3	0	2	2	0	1	0	1			
Peak Hour Factor	0.92	0.83	0.83	0.83	0.83	0.92	0.83	0.92	0.83			
Percent Heavy Veh, %	2	2	2	2	2	0	2	0	2			
Cap, veh/h	18	3927	41	113	2778	0	37	0	33			
Arrive On Green	0.01	0.76	0.76	0.03	0.78	0.00	0.02	0.00	0.02			
Sat Flow, veh/h	1774	5189	54	3442	3632	0	1774	0	1583			
Grp Volume(v), veh/h	10	623	341	46	1412	0	5	0	19			
Grp Sat Flow(s),veh/h/ln	1774	1695	1853	1721	1770	0	1774	0	1583			
Q Serve(g_s), s	0.4	4.1	4.1	1.0	10.7	0.0	0.2	0.0	0.9			
Cycle Q Clear(g_c), s	0.4	4.1	4.1	1.0	10.7	0.0	0.2	0.0	0.9			
Prop In Lane	1.00		0.03	1.00		0.00	1.00		1.00			
Lane Grp Cap(c), veh/h	18	2566	1402	113	2778	0	37	0	33			
V/C Ratio(X)	0.56	0.24	0.24	0.41	0.51	0.00	0.13	0.00	0.57			
Avail Cap(c_a), veh/h	95	2566	1402	184	2778	0	733	0	654			
HCM Platoon Ratio	1.00	1.00	1.00	1.00	1.00	1.00	1.00	1.00	1.00			
Upstream Filter(I)	0.89	0.89	0.89	1.00	1.00	0.00	1.00	0.00	1.00			
Uniform Delay (d), s/veh	37.0	2.7	2.7	35.5	2.9	0.0	36.0	0.0	36.4			
Incr Delay (d2), s/veh	22.4	0.2	0.4	0.9	0.7	0.0	0.6	0.0	5.6			
Initial Q Delay(d3),s/veh	0.0	0.0	0.0	0.0	0.0	0.0	0.0	0.0	0.0			
%ile BackOfQ(50%),veh/ln	0.3	2.0	2.2	0.5	5.4	0.0	0.1	0.0	0.4			
LnGrp Delay(d),s/veh	59.3	2.9	3.1	36.4	3.6	0.0	36.6	0.0	42.0			
LnGrp LOS	E	A	A	D	A		D		D			
Approach Vol, veh/h		974			1458			24				
Approach Delay, s/veh		3.6			4.6			40.9				
Approach LOS		A			A			D				

Timer	1	2	3	4	5	6	7	8
Assigned Phs	1	2			5	6		8
Phs Duration (G+Y+Rc), s	6.9	62.2			4.8	64.3		6.0
Change Period (Y+Rc), s	4.4	5.4			4.0	* 5.4		4.4
Max Green Setting (Gmax), s	4.6	25.8			4.0	* 26		31.0
Max Q Clear Time (g_c+I1), s	3.0	6.1			2.4	12.7		2.9
Green Ext Time (p_c), s	0.0	16.5			0.0	11.9		0.0

Intersection Summary	
HCM 2010 Ctrl Delay	4.5
HCM 2010 LOS	A

Notes

* HCM 2010 computational engine requires equal clearance times for the phases crossing the barrier.

Movement	EBL	EBT	EBR	WBL	WBT	WBR	NBL	NBT	NBR	SBL	SBT	SBR
Lane Configurations												
Volume (veh/h)	2	815	22	570	1326	2	8	0	55	34	0	1
Number	5	2	12	1	6	16	3	8	18	7	4	14
Initial Q (Qb), veh	0	0	0	0	0	0	0	0	0	0	0	0
Ped-Bike Adj(A_pbT)	1.00		1.00	1.00		1.00	0.98		1.00	1.00		0.98
Parking Bus, Adj	1.00	1.00	1.00	1.00	1.00	1.00	1.00	1.00	1.00	1.00	1.00	1.00
Adj Sat Flow, veh/h/ln	1863	1863	1900	1863	1863	1900	1863	1863	1863	1863	1863	1900
Adj Flow Rate, veh/h	2	849	23	594	1381	2	8	0	57	35	0	1
Adj No. of Lanes	1	3	0	2	3	0	1	0	2	1	1	0
Peak Hour Factor	0.96	0.96	0.96	0.96	0.96	0.96	0.96	0.96	0.96	0.96	0.96	0.96
Percent Heavy Veh, %	2	2	2	2	2	2	2	2	2	2	2	2
Cap, veh/h	4	3161	86	670	4265	6	137	0	168	136	0	83
Arrive On Green	0.00	0.62	0.62	0.19	0.81	0.81	0.05	0.00	0.05	0.05	0.00	0.05
Sat Flow, veh/h	1774	5091	138	3442	5244	8	1387	0	3167	1341	0	1557
Grp Volume(v), veh/h	2	565	307	594	893	490	8	0	57	35	0	1
Grp Sat Flow(s),veh/h/ln	1774	1695	1838	1721	1695	1861	1387	0	1583	1341	0	1557
Q Serve(g_s), s	0.1	8.5	8.5	18.8	7.5	7.5	0.6	0.0	1.9	2.8	0.0	0.1
Cycle Q Clear(g_c), s	0.1	8.5	8.5	18.8	7.5	7.5	0.7	0.0	1.9	2.8	0.0	0.1
Prop In Lane	1.00		0.07	1.00		0.00	1.00		1.00	1.00		1.00
Lane Grp Cap(c), veh/h	4	2105	1142	670	2758	1514	137	0	168	136	0	83
V/C Ratio(X)	0.52	0.27	0.27	0.89	0.32	0.32	0.06	0.00	0.34	0.26	0.00	0.01
Avail Cap(c_a), veh/h	73	2105	1142	1032	2758	1514	436	0	851	425	0	418
HCM Platoon Ratio	1.00	1.00	1.00	1.00	1.00	1.00	1.00	1.00	1.00	1.00	1.00	1.00
Upstream Filter(I)	1.00	1.00	1.00	0.74	0.74	0.74	1.00	0.00	1.00	1.00	0.00	1.00
Uniform Delay (d), s/veh	55.8	9.7	9.7	43.9	2.6	2.6	50.6	0.0	51.1	51.5	0.0	50.2
Incr Delay (d2), s/veh	35.6	0.3	0.6	3.2	0.2	0.4	0.1	0.0	0.4	0.4	0.0	0.0
Initial Q Delay(d3),s/veh	0.0	0.0	0.0	0.0	0.0	0.0	0.0	0.0	0.0	0.0	0.0	0.0
%ile BackOfQ(50%),veh/ln	0.1	4.0	4.4	9.2	3.6	4.0	0.2	0.0	0.9	1.1	0.0	0.0
LnGrp Delay(d),s/veh	91.4	10.0	10.2	47.1	2.9	3.1	50.6	0.0	51.6	51.9	0.0	50.3
LnGrp LOS	F	A	B	D	A	A	D		D	D		D
Approach Vol, veh/h		874			1977			65			36	
Approach Delay, s/veh		10.2			16.2			51.4			51.9	
Approach LOS		B			B			D			D	

Timer	1	2	3	4	5	6	7	8
Assigned Phs	1	2		4	5	6		8
Phs Duration (G+Y+Rc), s	26.2	74.9		10.9	4.6	96.5		10.9
Change Period (Y+Rc), s	4.4	5.4		4.9	4.4	* 5.4		4.9
Max Green Setting (Gmax), s	33.6	33.6		30.1	4.6	* 63		30.1
Max Q Clear Time (g_c+I1), s	20.8	10.5		4.8	2.1	9.5		3.9
Green Ext Time (p_c), s	1.0	17.6		0.2	0.0	31.3		0.2

Intersection Summary	
HCM 2010 Ctrl Delay	15.7
HCM 2010 LOS	B

Notes

User approved volume balancing among the lanes for turning movement.

Movement	EBL	EBT	EBR	WBL	WBT	WBR	NBL	NBT	NBR	SBL	SBT	SBR
Lane Configurations												
Volume (veh/h)	72	814	489	822	1088	473	482	97	762	568	0	196
Number	5	2	12	1	6	16	3	8	18	7	4	14
Initial Q (Qb), veh	0	0	0	0	0	0	0	0	0	0	0	0
Ped-Bike Adj(A_pbT)	1.00		0.97	1.00		1.00	1.00		0.99	1.00		1.00
Parking Bus, Adj	1.00	1.00	1.00	1.00	1.00	1.00	1.00	1.00	1.00	1.00	1.00	1.00
Adj Sat Flow, veh/h/ln	1863	1863	1863	1863	1863	1863	1863	1863	1863	1863	0	1863
Adj Flow Rate, veh/h	79	895	537	903	1196	520	530	107	837	624	0	215
Adj No. of Lanes	1	4	1	2	3	2	2	1	2	2	0	1
Peak Hour Factor	0.91	0.91	0.91	0.91	0.91	0.91	0.91	0.91	0.91	0.91	0.91	0.91
Percent Heavy Veh, %	2	2	2	2	2	2	2	2	2	2	0	2
Cap, veh/h	171	1492	901	976	2129	1167	1180	204	1090	689	0	0
Arrive On Green	0.10	0.23	0.23	0.28	0.42	0.42	0.34	0.11	0.11	0.20	0.00	0.00
Sat Flow, veh/h	1774	6408	1539	3442	5085	2787	3442	1863	2748	3442	624	
Grp Volume(v), veh/h	79	895	537	903	1196	520	530	107	837	624	71.0	
Grp Sat Flow(s),veh/h/ln	1774	1602	1539	1721	1695	1393	1721	1863	1374	1721	E	
Q Serve(g_s), s	6.3	18.7	34.1	38.2	26.8	20.0	17.9	8.1	16.4	26.6		
Cycle Q Clear(g_c), s	6.3	18.7	34.1	38.2	26.8	20.0	17.9	8.1	16.4	26.6		
Prop In Lane	1.00		1.00	1.00		1.00	1.00		1.00	1.00		
Lane Grp Cap(c), veh/h	171	1492	901	976	2129	1167	1180	204	1090	689		
V/C Ratio(X)	0.46	0.60	0.60	0.93	0.56	0.45	0.45	0.53	0.77	0.91		
Avail Cap(c_a), veh/h	177	1492	901	1101	2129	1167	1180	204	1090	812		
HCM Platoon Ratio	1.00	1.00	1.00	1.00	1.00	1.00	1.00	1.00	1.00	1.00		
Upstream Filter(I)	0.97	0.97	0.97	0.58	0.58	0.58	1.00	1.00	1.00	1.00		
Uniform Delay (d), s/veh	64.1	51.3	20.7	52.2	33.1	31.2	38.3	63.1	39.7	58.6		
Incr Delay (d2), s/veh	1.9	0.6	1.0	7.8	0.6	0.7	0.3	2.5	3.4	12.4		
Initial Q Delay(d3),s/veh	0.0	0.0	0.0	0.0	0.0	0.0	0.0	0.0	0.0	0.0		
%ile BackOfQ(50%),veh/ln	3.2	8.3	14.7	19.2	12.6	7.8	8.6	4.3	15.5	13.8		
LnGrp Delay(d),s/veh	66.0	52.0	21.8	60.0	33.8	31.9	38.6	65.6	43.0	71.0		
LnGrp LOS	E	D	C	E	C	C	D	E	D	E		
Approach Vol, veh/h		1511			2619			1474				
Approach Delay, s/veh		42.0			42.4			43.1				
Approach LOS		D			D			D				

Timer	1	2	3	4	5	6	7	8
Assigned Phs	1	2	3		5	6	7	8
Phs Duration (G+Y+Rc), s	46.5	41.9	55.6		18.6	69.8	34.6	21.0
Change Period (Y+Rc), s	4.0	7.0	* 4.2		* 4.2	7.0	4.6	4.6
Max Green Setting (Gmax), s	42.5	30.0	* 31		* 15	62.8	35.4	16.4
Max Q Clear Time (g_c+I1), s	40.2	36.1	19.9		8.3	28.8	28.6	18.4
Green Ext Time (p_c), s	2.3	0.0	1.5		0.1	25.5	1.5	0.0

Intersection Summary	
HCM 2010 Ctrl Delay	45.3
HCM 2010 LOS	D

Notes

* HCM 2010 computational engine requires equal clearance times for the phases crossing the barrier.

Movement	EBL	EBT	WBT	WBR	SBL	SBR
Lane Configurations						
Volume (veh/h)	688	1456	1078	1048	1114	1305
Number	5	2	6	16	7	14
Initial Q (Qb), veh	0	0	0	0	0	0
Ped-Bike Adj(A_pbT)	1.00			1.00	1.00	1.00
Parking Bus, Adj	1.00	1.00	1.00	1.00	1.00	1.00
Adj Sat Flow, veh/h/ln	1863	1863	1863	1863	1863	1863
Adj Flow Rate, veh/h	732	1549	1147	0	1185	1388
Adj No. of Lanes	2	4	4	2	3	2
Peak Hour Factor	0.94	0.94	0.94	0.94	0.94	0.94
Percent Heavy Veh, %	2	2	2	2	2	2
Cap, veh/h	737	2725	1169	508	2536	1412
Arrive On Green	0.21	0.43	0.18	0.00	0.51	0.51
Sat Flow, veh/h	3442	6669	6669	2787	5003	2787
Grp Volume(v), veh/h	732	1549	1147	0	1185	1388
Grp Sat Flow(s),veh/h/ln	1721	1602	1602	1393	1668	1393
Q Serve(g_s), s	29.7	25.6	25.0	0.0	21.4	68.5
Cycle Q Clear(g_c), s	29.7	25.6	25.0	0.0	21.4	68.5
Prop In Lane	1.00			1.00	1.00	1.00
Lane Grp Cap(c), veh/h	737	2725	1169	508	2536	1412
V/C Ratio(X)	0.99	0.57	0.98	0.00	0.47	0.98
Avail Cap(c_a), veh/h	737	2725	1169	508	2537	1413
HCM Platoon Ratio	1.00	1.00	1.00	1.00	1.00	1.00
Upstream Filter(I)	0.66	0.66	1.00	0.00	1.00	1.00
Uniform Delay (d), s/veh	54.9	30.5	57.0	0.0	22.3	33.9
Incr Delay (d2), s/veh	25.1	0.6	22.2	0.0	0.1	19.8
Initial Q Delay(d3),s/veh	0.0	0.0	0.0	0.0	0.0	0.0
%ile BackOfQ(50%),veh/ln	16.7	11.4	12.9	0.0	9.9	44.0
LnGrp Delay(d),s/veh	80.0	31.1	79.1	0.0	22.4	53.8
LnGrp LOS	F	C	E		C	D
Approach Vol, veh/h		2281	1147		2573	
Approach Delay, s/veh		46.8	79.1		39.3	
Approach LOS		D	E		D	

Timer	1	2	3	4	5	6	7	8
Assigned Phs		2		4	5	6		
Phs Duration (G+Y+Rc), s		65.0		75.0	34.0	31.0		
Change Period (Y+Rc), s		5.5		4.0	4.0	5.5		
Max Green Setting (Gmax), s		59.5		71.0	30.0	25.5		
Max Q Clear Time (g_c+I1), s		27.6		70.5	31.7	27.0		
Green Ext Time (p_c), s		23.8		0.4	0.0	0.0		

Intersection Summary	
HCM 2010 Ctrl Delay	49.8
HCM 2010 LOS	D

Movement	EBL	EBT	EBR	WBL	WBT	WBR	NBL	NBT	NBR	SBL	SBT	SBR
Lane Configurations												
Volume (veh/h)	246	265	421	245	156	433	342	1566	279	236	1521	418
Number	7	4	14	3	8	18	5	2	12	1	6	16
Initial Q (Qb), veh	0	0	0	0	0	0	0	0	0	0	0	0
Ped-Bike Adj(A_pbT)	1.00		0.97	1.00		0.98	1.00		1.00	1.00		0.99
Parking Bus, Adj	1.00	1.00	1.00	1.00	1.00	1.00	1.00	1.00	1.00	1.00	1.00	1.00
Adj Sat Flow, veh/h/ln	1863	1863	1863	1863	1863	1863	1863	1863	1900	1863	1863	1863
Adj Flow Rate, veh/h	259	279	443	258	164	456	360	1648	294	248	1601	440
Adj No. of Lanes	2	1	1	1	1	1	2	2	0	1	2	1
Peak Hour Factor	0.95	0.95	0.95	0.95	0.95	0.95	0.95	0.95	0.95	0.95	0.95	0.95
Percent Heavy Veh, %	2	2	2	2	2	2	2	2	2	2	2	2
Cap, veh/h	293	397	326	215	463	385	322	1259	218	202	1549	819
Arrive On Green	0.09	0.21	0.21	0.12	0.25	0.25	0.09	0.42	0.42	0.11	0.44	0.44
Sat Flow, veh/h	3442	1863	1529	1774	1863	1546	3442	3017	523	1774	3539	1564
Grp Volume(v), veh/h	259	279	443	258	164	456	360	946	996	248	1601	440
Grp Sat Flow(s),veh/h/ln	1721	1863	1529	1774	1863	1546	1721	1770	1770	1774	1770	1564
Q Serve(g_s), s	10.8	20.2	31.0	17.6	10.6	36.2	13.6	60.7	60.7	16.6	63.7	27.2
Cycle Q Clear(g_c), s	10.8	20.2	31.0	17.6	10.6	36.2	13.6	60.7	60.7	16.6	63.7	27.2
Prop In Lane	1.00		1.00	1.00		1.00	1.00		0.30	1.00		1.00
Lane Grp Cap(c), veh/h	293	397	326	215	463	385	322	738	739	202	1549	819
V/C Ratio(X)	0.88	0.70	1.36	1.20	0.35	1.19	1.12	1.28	1.35	1.23	1.03	0.54
Avail Cap(c_a), veh/h	293	397	326	215	463	385	322	738	739	202	1549	819
HCM Platoon Ratio	1.00	1.00	1.00	1.00	1.00	1.00	1.00	1.00	1.00	1.00	1.00	1.00
Upstream Filter(I)	1.00	1.00	1.00	1.00	1.00	1.00	1.00	1.00	1.00	1.00	1.00	1.00
Uniform Delay (d), s/veh	65.8	53.0	57.3	64.0	45.0	54.7	65.9	42.4	42.4	64.4	40.9	23.0
Incr Delay (d2), s/veh	24.7	5.5	180.5	126.8	0.2	106.9	86.3	137.1	165.6	137.1	31.9	0.9
Initial Q Delay(d3),s/veh	0.0	0.0	0.0	0.0	0.0	0.0	0.0	0.0	0.0	0.0	0.0	0.0
%ile BackOfQ(50%),veh/ln	6.2	11.0	29.4	16.1	5.4	26.8	10.3	57.6	63.5	15.8	37.9	11.9
LnGrp Delay(d),s/veh	90.6	58.5	237.7	190.8	45.2	161.5	152.2	179.5	208.0	201.6	72.8	23.9
LnGrp LOS	F	E	F	F	D	F	F	F	F	F	F	C
Approach Vol, veh/h		981			878			2302			2289	
Approach Delay, s/veh		147.9			148.4			187.5			77.4	
Approach LOS		F			F			F			E	

Timer	1	2	3	4	5	6	7	8
Assigned Phs	1	2	3	4	5	6	7	8
Phs Duration (G+Y+Rc), s	21.0	66.0	22.0	36.5	18.0	69.0	16.8	41.7
Change Period (Y+Rc), s	4.4	5.3	4.4	* 5.5	4.4	* 5.3	4.4	5.5
Max Green Setting (Gmax), s	16.6	60.6	17.6	* 31	13.6	* 64	12.4	35.8
Max Q Clear Time (g_c+I1), s	18.6	62.7	19.6	33.0	15.6	65.7	12.8	38.2
Green Ext Time (p_c), s	0.0	0.0	0.0	0.0	0.0	0.0	0.0	0.0

Intersection Summary	
HCM 2010 Ctrl Delay	137.1
HCM 2010 LOS	F

Notes

* HCM 2010 computational engine requires equal clearance times for the phases crossing the barrier.

Movement	EBL	EBT	EBR	WBL	WBT	WBR	NBL	NBT	NBR	SBL	SBT	SBR
Lane Configurations												
Volume (veh/h)	0	1574	671	400	439	0	0	0	0	384	1	1736
Number	5	2	12	1	6	16				7	4	14
Initial Q (Qb), veh	0	0	0	0	0	0				0	0	0
Ped-Bike Adj(A_pbT)	1.00		1.00	1.00		1.00				1.00		1.00
Parking Bus, Adj	1.00	1.00	1.00	1.00	1.00	1.00				1.00	1.00	1.00
Adj Sat Flow, veh/h/ln	0	1863	1863	1863	1863	0				1900	1863	1863
Adj Flow Rate, veh/h	0	1640	699	417	457	0				400	1	0
Adj No. of Lanes	0	2	1	2	2	0				0	1	1
Peak Hour Factor	0.96	0.96	0.96	0.96	0.96	0.96				0.96	0.96	0.96
Percent Heavy Veh, %	0	2	2	2	2	0				2	2	2
Cap, veh/h	0	1640	734	451	2269	0				446	1	399
Arrive On Green	0.00	0.46	0.46	0.13	0.64	0.00				0.25	0.25	0.00
Sat Flow, veh/h	0	3632	1583	3442	3632	0				1770	4	1583
Grp Volume(v), veh/h	0	1640	699	417	457	0				401	0	0
Grp Sat Flow(s),veh/h/ln	0	1770	1583	1721	1770	0				1774	0	1583
Q Serve(g_s), s	0.0	41.7	38.2	10.8	4.8	0.0				19.7	0.0	0.0
Cycle Q Clear(g_c), s	0.0	41.7	38.2	10.8	4.8	0.0				19.7	0.0	0.0
Prop In Lane	0.00		1.00	1.00		0.00				1.00		1.00
Lane Grp Cap(c), veh/h	0	1640	734	451	2269	0				448	0	399
V/C Ratio(X)	0.00	1.00	0.95	0.92	0.20	0.00				0.90	0.00	0.00
Avail Cap(c_a), veh/h	0	1640	734	451	2269	0				520	0	464
HCM Platoon Ratio	1.00	1.00	1.00	1.00	1.00	1.00				1.00	1.00	1.00
Upstream Filter(I)	0.00	1.00	1.00	0.35	0.35	0.00				1.00	0.00	0.00
Uniform Delay (d), s/veh	0.0	24.2	23.2	38.7	6.7	0.0				32.5	0.0	0.0
Incr Delay (d2), s/veh	0.0	22.3	23.5	11.3	0.1	0.0				16.4	0.0	0.0
Initial Q Delay(d3),s/veh	0.0	0.0	0.0	0.0	0.0	0.0				0.0	0.0	0.0
%ile BackOfQ(50%),veh/ln	0.0	25.3	21.3	5.8	2.4	0.0				11.6	0.0	0.0
LnGrp Delay(d),s/veh	0.0	46.4	46.7	50.0	6.7	0.0				48.9	0.0	0.0
LnGrp LOS		F	D	D	A					D		
Approach Vol, veh/h		2339			874						401	
Approach Delay, s/veh		46.5			27.4						48.9	
Approach LOS		D			C						D	

Timer	1	2	3	4	5	6	7	8
Assigned Phs	1	2		4		6		
Phs Duration (G+Y+Rc), s	16.0	46.7		27.3		62.7		
Change Period (Y+Rc), s	* 4.2	5.0		4.6		5.0		
Max Green Setting (Gmax), s	* 12	38.0		26.4		54.0		
Max Q Clear Time (g_c+I1), s	12.8	43.7		21.7		6.8		
Green Ext Time (p_c), s	0.0	0.0		1.1		33.6		

Intersection Summary	
HCM 2010 Ctrl Delay	42.2
HCM 2010 LOS	D

Notes

* HCM 2010 computational engine requires equal clearance times for the phases crossing the barrier.

Movement	EBL	EBT	EBR	WBL	WBT	WBR	NBL	NBT	NBR	SBL	SBT	SBR
Lane Configurations												
Volume (veh/h)	1207	751	0	0	451	631	388	0	659	0	0	0
Number	5	2	12	1	6	16	7	4	14			
Initial Q (Qb), veh	0	0	0	0	0	0	0	0	0			
Ped-Bike Adj(A_pbT)	1.00		1.00	1.00		0.98	1.00		1.00			
Parking Bus, Adj	1.00	1.00	1.00	1.00	1.00	1.00	1.00	1.00	1.00			
Adj Sat Flow, veh/h/ln	1863	1863	0	0	1863	1900	1900	1863	1863			
Adj Flow Rate, veh/h	1298	808	0	0	485	678	417	0	709			
Adj No. of Lanes	2	2	0	0	2	0	0	1	1			
Peak Hour Factor	0.93	0.93	0.93	0.93	0.93	0.93	0.93	0.93	0.93			
Percent Heavy Veh, %	2	2	0	0	2	2	2	2	2			
Cap, veh/h	915	2283	0	0	596	521	451	0	402			
Arrive On Green	0.27	0.64	0.00	0.00	0.34	0.34	0.25	0.00	0.25			
Sat Flow, veh/h	3442	3632	0	0	1863	1546	1774	0	1583			
Grp Volume(v), veh/h	1298	808	0	0	485	678	417	0	709			
Grp Sat Flow(s),veh/h/ln	1721	1770	0	0	1770	1546	1774	0	1583			
Q Serve(g_s), s	26.6	10.5	0.0	0.0	25.0	33.7	22.9	0.0	25.4			
Cycle Q Clear(g_c), s	26.6	10.5	0.0	0.0	25.0	33.7	22.9	0.0	25.4			
Prop In Lane	1.00		0.00	0.00		1.00	1.00		1.00			
Lane Grp Cap(c), veh/h	915	2283	0	0	596	521	451	0	402			
V/C Ratio(X)	1.42	0.35	0.00	0.00	0.81	1.30	0.93	0.00	1.76			
Avail Cap(c_a), veh/h	915	2283	0	0	596	521	451	0	402			
HCM Platoon Ratio	1.00	1.00	1.00	1.00	1.00	1.00	1.00	1.00	1.00			
Upstream Filter(I)	0.09	0.09	0.00	0.00	0.73	0.73	1.00	0.00	1.00			
Uniform Delay (d), s/veh	36.7	8.2	0.0	0.0	30.3	33.2	36.4	0.0	37.3			
Incr Delay (d2), s/veh	188.6	0.0	0.0	0.0	8.7	145.9	25.1	0.0	353.4			
Initial Q Delay(d3),s/veh	0.0	0.0	0.0	0.0	0.0	0.0	0.0	0.0	0.0			
%ile BackOfQ(50%),veh/ln	36.6	5.1	0.0	0.0	13.6	35.4	14.4	0.0	58.9			
LnGrp Delay(d),s/veh	225.3	8.2	0.0	0.0	39.0	179.0	61.4	0.0	390.7			
LnGrp LOS	F	A			D	F	E		F			
Approach Vol, veh/h		2106			1163			1126				
Approach Delay, s/veh		142.0			120.6			268.7				
Approach LOS		F			F			F				

Timer	1	2	3	4	5	6	7	8
Assigned Phs		2		4	5	6		
Phs Duration (G+Y+Rc), s		70.0		30.0	30.8	39.2		
Change Period (Y+Rc), s		5.5		4.6	* 4.2	5.5		
Max Green Setting (Gmax), s		64.5		25.4	* 27	33.7		
Max Q Clear Time (g_c+I1), s		12.5		27.4	28.6	35.7		
Green Ext Time (p_c), s		24.6		0.0	0.0	0.0		

Intersection Summary	
HCM 2010 Ctrl Delay	168.8
HCM 2010 LOS	F

Notes

* HCM 2010 computational engine requires equal clearance times for the phases crossing the barrier.

Movement	EBL	EBT	EBR	WBL	WBT	WBR	NBL	NBT	NBR	SBL	SBT	SBR
Lane Configurations												
Volume (veh/h)	639	58	713	26	70	32	580	248	18	18	226	432
Number	5	2	12	1	6	16	3	8	18	7	4	14
Initial Q (Qb), veh	0	0	0	0	0	0	0	0	0	0	0	0
Ped-Bike Adj(A_pbT)	1.00		1.00	1.00		1.00	1.00		1.00	1.00		1.00
Parking Bus, Adj	1.00	1.00	1.00	1.00	1.00	1.00	1.00	1.00	1.00	1.00	1.00	1.00
Adj Sat Flow, veh/h/ln	1863	1863	1863	1863	1863	1900	1863	1863	1900	1900	1863	1863
Adj Flow Rate, veh/h	702	64	784	29	77	35	637	273	20	20	403	372
Adj No. of Lanes	2	1	1	1	2	0	2	1	0	0	1	1
Peak Hour Factor	0.91	0.91	0.91	0.91	0.91	0.91	0.91	0.91	0.91	0.91	0.91	0.91
Percent Heavy Veh, %	2	2	2	2	2	2	2	2	2	2	2	2
Cap, veh/h	983	532	795	118	160	69	769	372	27	21	429	383
Arrive On Green	0.29	0.29	0.29	0.07	0.07	0.07	0.22	0.22	0.22	0.24	0.24	0.24
Sat Flow, veh/h	3442	1863	1583	1774	2414	1036	3548	1715	126	88	1770	1583
Grp Volume(v), veh/h	702	64	784	29	55	57	637	0	293	423	0	372
Grp Sat Flow(s),veh/h/ln	1721	1863	1583	1774	1770	1680	1774	0	1841	1858	0	1583
Q Serve(g_s), s	19.0	2.6	29.6	1.6	3.1	3.4	17.8	0.0	15.4	23.1	0.0	24.1
Cycle Q Clear(g_c), s	19.0	2.6	29.6	1.6	3.1	3.4	17.8	0.0	15.4	23.1	0.0	24.1
Prop In Lane	1.00		1.00	1.00		0.62	1.00		0.07	0.05		1.00
Lane Grp Cap(c), veh/h	983	532	795	118	117	112	769	0	399	450	0	383
V/C Ratio(X)	0.71	0.12	0.99	0.25	0.47	0.51	0.83	0.00	0.73	0.94	0.00	0.97
Avail Cap(c_a), veh/h	983	532	795	308	307	292	948	0	492	450	0	383
HCM Platoon Ratio	1.00	1.00	1.00	1.00	1.00	1.00	1.00	1.00	1.00	1.00	1.00	1.00
Upstream Filter(I)	1.00	1.00	1.00	1.00	1.00	1.00	1.00	0.00	1.00	1.00	0.00	1.00
Uniform Delay (d), s/veh	33.2	27.4	20.2	45.9	46.6	46.7	38.7	0.0	37.8	38.5	0.0	38.9
Incr Delay (d2), s/veh	3.0	0.2	28.4	1.1	2.9	3.6	5.1	0.0	4.4	27.9	0.0	38.0
Initial Q Delay(d3),s/veh	0.0	0.0	0.0	0.0	0.0	0.0	0.0	0.0	0.0	0.0	0.0	0.0
%ile BackOfQ(50%),veh/ln	9.4	1.4	28.5	0.8	1.6	1.7	9.2	0.0	8.3	15.4	0.0	14.6
LnGrp Delay(d),s/veh	36.2	27.6	48.6	47.0	49.5	50.3	43.9	0.0	42.2	66.4	0.0	76.9
LnGrp LOS	D	C	D	D	D	D	D		D	E		E
Approach Vol, veh/h		1550			141			930			795	
Approach Delay, s/veh		42.1			49.3			43.4			71.3	
Approach LOS		D			D			D			E	

Timer	1	2	3	4	5	6	7	8
Assigned Phs		2		4		6		8
Phs Duration (G+Y+Rc), s		34.5		30.0		11.8		27.4
Change Period (Y+Rc), s		4.9		4.9		4.9		4.9
Max Green Setting (Gmax), s		29.6		25.1		18.0		27.7
Max Q Clear Time (g_c+I1), s		31.6		26.1		5.4		19.8
Green Ext Time (p_c), s		0.0		0.0		0.5		2.7

Intersection Summary	
HCM 2010 Ctrl Delay	49.5
HCM 2010 LOS	D

Notes

User approved volume balancing among the lanes for turning movement.

Movement	EBL	EBT	EBR	WBL	WBT	WBR	NBL	NBT	NBR	SBL	SBT	SBR
Lane Configurations												
Volume (veh/h)	61	7	32	124	10	46	28	577	69	24	660	46
Number	7	4	14	3	8	18	5	2	12	1	6	16
Initial Q (Qb), veh	0	0	0	0	0	0	0	0	0	0	0	0
Ped-Bike Adj(A_pbT)	1.00		1.00	1.00		1.00	1.00		1.00	1.00		1.00
Parking Bus, Adj	1.00	1.00	1.00	1.00	1.00	1.00	1.00	1.00	1.00	1.00	1.00	1.00
Adj Sat Flow, veh/h/ln	1900	1863	1900	1900	1863	1900	1863	1863	1900	1863	1863	1900
Adj Flow Rate, veh/h	66	8	35	135	11	50	30	627	75	26	717	51
Adj No. of Lanes	0	1	0	0	1	0	1	1	0	1	1	0
Peak Hour Factor	0.92	0.92	0.92	0.92	0.92	0.92	0.92	0.92	0.92	0.92	0.92	0.91
Percent Heavy Veh, %	2	2	2	2	2	2	2	2	2	2	2	2
Cap, veh/h	189	32	77	221	16	60	40	1092	131	36	1146	81
Arrive On Green	0.16	0.16	0.16	0.16	0.16	0.16	0.02	0.67	0.67	0.02	0.67	0.67
Sat Flow, veh/h	821	197	482	999	100	376	1774	1633	195	1774	1719	122
Grp Volume(v), veh/h	109	0	0	196	0	0	30	0	702	26	0	768
Grp Sat Flow(s),veh/h/ln	1500	0	0	1474	0	0	1774	0	1828	1774	0	1841
Q Serve(g_s), s	0.0	0.0	0.0	6.4	0.0	0.0	1.7	0.0	20.7	1.5	0.0	23.9
Cycle Q Clear(g_c), s	6.4	0.0	0.0	12.8	0.0	0.0	1.7	0.0	20.7	1.5	0.0	23.9
Prop In Lane	0.61		0.32	0.69		0.26	1.00		0.11	1.00		0.07
Lane Grp Cap(c), veh/h	298	0	0	297	0	0	40	0	1222	36	0	1227
V/C Ratio(X)	0.37	0.00	0.00	0.66	0.00	0.00	0.75	0.00	0.57	0.71	0.00	0.63
Avail Cap(c_a), veh/h	659	0	0	656	0	0	75	0	1222	75	0	1227
HCM Platoon Ratio	1.00	1.00	1.00	1.00	1.00	1.00	1.00	1.00	1.00	1.00	1.00	1.00
Upstream Filter(I)	1.00	0.00	0.00	1.00	0.00	0.00	1.00	0.00	1.00	1.00	0.00	1.00
Uniform Delay (d), s/veh	37.9	0.0	0.0	40.5	0.0	0.0	48.6	0.0	8.9	48.7	0.0	9.5
Incr Delay (d2), s/veh	0.3	0.0	0.0	0.9	0.0	0.0	9.8	0.0	2.0	9.2	0.0	2.4
Initial Q Delay(d3),s/veh	0.0	0.0	0.0	0.0	0.0	0.0	0.0	0.0	0.0	0.0	0.0	0.0
%ile BackOfQ(50%),veh/ln	2.7	0.0	0.0	5.3	0.0	0.0	0.9	0.0	11.0	0.8	0.0	12.8
LnGrp Delay(d),s/veh	38.2	0.0	0.0	41.5	0.0	0.0	58.4	0.0	10.9	57.8	0.0	12.0
LnGrp LOS	D			D			E		B	E		B
Approach Vol, veh/h		109			196			732			794	
Approach Delay, s/veh		38.2			41.5			12.8			13.5	
Approach LOS		D			D			B			B	

Timer	1	2	3	4	5	6	7	8
Assigned Phs	1	2		4	5	6		8
Phs Duration (G+Y+Rc), s	6.5	72.7		20.9	6.7	72.4		20.9
Change Period (Y+Rc), s	4.4	* 5.8		4.9	4.4	5.8		4.9
Max Green Setting (Gmax), s	4.3	* 40		41.1	4.2	39.6		41.1
Max Q Clear Time (g_c+I1), s	3.5	22.7		8.4	3.7	25.9		14.8
Green Ext Time (p_c), s	0.0	11.8		1.3	0.0	9.9		1.2

Intersection Summary	
HCM 2010 Ctrl Delay	17.7
HCM 2010 LOS	B

Notes

* HCM 2010 computational engine requires equal clearance times for the phases crossing the barrier.

Movement	NBT	NBR	SBL	SBT	SWL	SWR
Lane Configurations						
Volume (veh/h)	561	785	0	776	864	19
Number	2	12	1	6	3	18
Initial Q (Qb), veh	0	0	0	0	0	0
Ped-Bike Adj(A_pbT)		1.00	1.00		1.00	1.00
Parking Bus, Adj	1.00	1.00	1.00	1.00	1.00	1.00
Adj Sat Flow, veh/h/ln	1863	1900	0	1863	1863	1900
Adj Flow Rate, veh/h	610	853	0	843	959	0
Adj No. of Lanes	2	0	0	2	2	1
Peak Hour Factor	0.92	0.92	0.92	0.92	0.92	0.92
Percent Heavy Veh, %	2	2	0	2	2	0
Cap, veh/h	924	826	0	1847	1130	515
Arrive On Green	0.52	0.52	0.00	0.52	0.32	0.00
Sat Flow, veh/h	1863	1583	0	3725	3548	1615
Grp Volume(v), veh/h	610	853	0	843	959	0
Grp Sat Flow(s),veh/h/ln	1770	1583	0	1770	1774	1615
Q Serve(g_s), s	16.9	35.0	0.0	10.0	16.9	0.0
Cycle Q Clear(g_c), s	16.9	35.0	0.0	10.0	16.9	0.0
Prop In Lane		1.00	0.00		1.00	1.00
Lane Grp Cap(c), veh/h	924	826	0	1847	1130	515
V/C Ratio(X)	0.66	1.03	0.00	0.46	0.85	0.00
Avail Cap(c_a), veh/h	924	826	0	1847	1381	629
HCM Platoon Ratio	1.00	1.00	1.00	1.00	1.00	1.00
Upstream Filter(I)	1.00	1.00	0.00	1.00	1.00	0.00
Uniform Delay (d), s/veh	11.7	16.0	0.0	10.1	21.3	0.0
Incr Delay (d2), s/veh	3.7	39.9	0.0	0.8	4.4	0.0
Initial Q Delay(d3),s/veh	0.0	0.0	0.0	0.0	0.0	0.0
%ile BackOfQ(50%),veh/ln	9.1	24.3	0.0	5.0	8.9	0.0
LnGrp Delay(d),s/veh	15.4	55.9	0.0	10.9	25.7	0.0
LnGrp LOS	B	F		B	C	
Approach Vol, veh/h	1463			843	959	
Approach Delay, s/veh	39.0			10.9	25.7	
Approach LOS	D			B	C	

Timer	1	2	3	4	5	6	7	8
Assigned Phs		2				6		8
Phs Duration (G+Y+Rc), s		40.8				40.8		26.3
Change Period (Y+Rc), s		* 5.8				5.8		4.9
Max Green Setting (Gmax), s		* 35				23.2		26.1
Max Q Clear Time (g_c+I1), s		37.0				12.0		18.9
Green Ext Time (p_c), s		0.0				9.7		2.4

Intersection Summary	
HCM 2010 Ctrl Delay	27.8
HCM 2010 LOS	C

Notes

User approved volume balancing among the lanes for turning movement.

Movement	EBL	EBT	EBR	WBL	WBT	WBR	NBL	NBT	NBR	SBL	SBT	SBR
Lane Configurations												
Volume (veh/h)	43	39	187	19	14	706	82	454	20	852	795	38
Number	7	4	14	3	8	18	5	2	12	1	6	16
Initial Q (Qb), veh	0	0	0	0	0	0	0	0	0	0	0	0
Ped-Bike Adj(A_pbT)	1.00		1.00	1.00		1.00	1.00		1.00	1.00		1.00
Parking Bus, Adj	1.00	1.00	1.00	1.00	1.00	1.00	1.00	1.00	1.00	1.00	1.00	1.00
Adj Sat Flow, veh/h/ln	1863	1863	1900	1900	1863	1863	1863	1863	1900	1863	1863	1900
Adj Flow Rate, veh/h	44	40	191	0	0	750	84	463	20	869	811	39
Adj No. of Lanes	1	1	0	0	1	2	1	3	0	2	2	0
Peak Hour Factor	0.98	0.98	0.98	0.98	0.98	0.98	0.98	0.98	0.98	0.98	0.98	0.98
Percent Heavy Veh, %	2	2	2	2	2	2	2	2	2	2	2	2
Cap, veh/h	250	63	303	0	419	1449	108	1799	77	800	1827	88
Arrive On Green	0.23	0.23	0.23	0.00	0.00	0.23	0.06	0.36	0.36	0.23	0.53	0.53
Sat Flow, veh/h	709	281	1344	0	1863	3167	1774	5000	215	3442	3438	165
Grp Volume(v), veh/h	44	0	231	0	0	750	84	313	170	869	417	433
Grp Sat Flow(s),veh/h/ln	709	0	1626	0	1863	1583	1774	1695	1825	1721	1770	1834
Q Serve(g_s), s	4.1	0.0	10.3	0.0	0.0	13.5	3.7	5.2	5.3	18.6	11.6	11.6
Cycle Q Clear(g_c), s	4.1	0.0	10.3	0.0	0.0	13.5	3.7	5.2	5.3	18.6	11.6	11.6
Prop In Lane	1.00		0.83	0.00		1.00	1.00		0.12	1.00		0.09
Lane Grp Cap(c), veh/h	250	0	366	0	419	1449	108	1220	657	800	941	974
V/C Ratio(X)	0.18	0.00	0.63	0.00	0.00	0.52	0.78	0.26	0.26	1.09	0.44	0.44
Avail Cap(c_a), veh/h	321	0	528	0	605	1765	208	1220	657	800	941	974
HCM Platoon Ratio	1.00	1.00	1.00	1.00	1.00	1.00	1.00	1.00	1.00	1.00	1.00	1.00
Upstream Filter(I)	1.00	0.00	1.00	0.00	0.00	0.57	1.00	1.00	1.00	1.00	1.00	1.00
Uniform Delay (d), s/veh	25.6	0.0	28.0	0.0	0.0	15.4	37.0	18.1	18.1	30.7	11.5	11.5
Incr Delay (d2), s/veh	0.1	0.0	0.7	0.0	0.0	0.1	4.5	0.5	1.0	57.7	1.5	1.5
Initial Q Delay(d3),s/veh	0.0	0.0	0.0	0.0	0.0	0.0	0.0	0.0	0.0	0.0	0.0	0.0
%ile BackOfQ(50%),veh/ln	0.8	0.0	4.7	0.0	0.0	5.9	2.0	2.5	2.8	15.2	6.0	6.2
LnGrp Delay(d),s/veh	25.7	0.0	28.7	0.0	0.0	15.5	41.5	18.6	19.0	88.4	13.0	13.0
LnGrp LOS	C		C			B	D	B	B	F	B	B
Approach Vol, veh/h		275			750			567			1719	
Approach Delay, s/veh		28.2			15.5			22.1			51.1	
Approach LOS		C			B			C			D	

Timer	1	2	3	4	5	6	7	8
Assigned Phs	1	2		4	5	6		8
Phs Duration (G+Y+Rc), s	23.0	34.1		22.9	9.3	47.8		22.9
Change Period (Y+Rc), s	4.4	* 5.3		4.9	4.4	5.3		4.9
Max Green Setting (Gmax), s	18.6	* 21		26.0	9.4	30.0		26.0
Max Q Clear Time (g_c+I1), s	20.6	7.3		12.3	5.7	13.6		15.5
Green Ext Time (p_c), s	0.0	6.8		2.8	0.0	7.6		2.5

Intersection Summary	
HCM 2010 Ctrl Delay	36.2
HCM 2010 LOS	D

Notes

User approved volume balancing among the lanes for turning movement.

Movement	WBL	WBR	NBT	NBR	SBL	SBT
Lane Configurations						
Volume (veh/h)	1148	10	605	1115	0	986
Number	3	18	2	12	1	6
Initial Q (Qb), veh	0	0	0	0	0	0
Ped-Bike Adj(A_pbT)	1.00	1.00		1.00	1.00	
Parking Bus, Adj	1.00	1.00	1.00	1.00	1.00	1.00
Adj Sat Flow, veh/h/ln	1863	1900	1863	1863	0	1863
Adj Flow Rate, veh/h	1205	0	630	0	0	1027
Adj No. of Lanes	2	1	2	1	0	2
Peak Hour Factor	0.96	0.96	0.96	0.96	0.96	0.96
Percent Heavy Veh, %	2	0	2	2	0	2
Cap, veh/h	1334	607	1371	613	0	1371
Arrive On Green	0.38	0.00	0.39	0.00	0.00	0.39
Sat Flow, veh/h	3548	1615	3632	1583	0	3725
Grp Volume(v), veh/h	1205	0	630	0	0	1027
Grp Sat Flow(s),veh/h/ln	1774	1615	1770	1583	0	1770
Q Serve(g_s), s	19.3	0.0	8.0	0.0	0.0	15.0
Cycle Q Clear(g_c), s	19.3	0.0	8.0	0.0	0.0	15.0
Prop In Lane	1.00	1.00		1.00	0.00	
Lane Grp Cap(c), veh/h	1334	607	1371	613	0	1371
V/C Ratio(X)	0.90	0.00	0.46	0.00	0.00	0.75
Avail Cap(c_a), veh/h	1378	627	1371	613	0	1371
HCM Platoon Ratio	1.00	1.00	1.00	1.00	1.00	1.00
Upstream Filter(I)	1.00	0.00	1.00	0.00	0.00	1.00
Uniform Delay (d), s/veh	17.7	0.0	13.7	0.0	0.0	15.9
Incr Delay (d2), s/veh	8.6	0.0	1.1	0.0	0.0	3.8
Initial Q Delay(d3),s/veh	0.0	0.0	0.0	0.0	0.0	0.0
%ile BackOfQ(50%),veh/ln	11.0	0.0	4.1	0.0	0.0	8.0
LnGrp Delay(d),s/veh	26.3	0.0	14.8	0.0	0.0	19.7
LnGrp LOS	C		B			B
Approach Vol, veh/h	1205		630			1027
Approach Delay, s/veh	26.3		14.8			19.7
Approach LOS	C		B			B

Timer	1	2	3	4	5	6	7	8
Assigned Phs		2				6		8
Phs Duration (G+Y+Rc), s		28.7				28.7		31.3
Change Period (Y+Rc), s		5.5				* 5.5		8.7
Max Green Setting (Gmax), s		22.5				* 23		23.3
Max Q Clear Time (g_c+I1), s		10.0				17.0		21.3
Green Ext Time (p_c), s		10.2				5.0		1.3

Intersection Summary	
HCM 2010 Ctrl Delay	21.4
HCM 2010 LOS	C

Notes

User approved volume balancing among the lanes for turning movement.

Movement	EBL	EBT	EBR	WBL	WBT	WBR	NBL	NBT	NBR	SBL	SBT	SBR
Lane Configurations												
Volume (veh/h)	501	309	31	306	224	144	47	815	291	232	839	397
Number	7	4	14	3	8	18	5	2	12	1	6	16
Initial Q (Qb), veh	0	0	0	0	0	0	0	0	0	0	0	0
Ped-Bike Adj(A_pbT)	1.00		1.00	1.00		1.00	1.00		1.00	1.00		1.00
Parking Bus, Adj	1.00	1.00	1.00	1.00	1.00	1.00	1.00	1.00	1.00	1.00	1.00	1.00
Adj Sat Flow, veh/h/ln	1863	1863	1900	1863	1863	1863	1863	1863	1900	1863	1863	1900
Adj Flow Rate, veh/h	448	449	33	326	238	153	50	867	310	247	893	422
Adj No. of Lanes	1	1	0	2	1	1	1	2	0	1	2	0
Peak Hour Factor	0.94	0.94	0.94	0.94	0.94	0.94	0.94	0.94	0.94	0.94	0.94	0.94
Percent Heavy Veh, %	2	2	2	2	2	2	2	2	2	2	2	2
Cap, veh/h	457	442	32	518	272	231	64	845	301	223	984	460
Arrive On Green	0.26	0.26	0.26	0.15	0.15	0.15	0.04	0.33	0.33	0.13	0.42	0.42
Sat Flow, veh/h	1774	1714	126	3548	1863	1583	1774	2559	913	1774	2343	1096
Grp Volume(v), veh/h	448	0	482	326	238	153	50	599	578	247	672	643
Grp Sat Flow(s),veh/h/ln	1774	0	1841	1774	1863	1583	1774	1770	1702	1774	1770	1669
Q Serve(g_s), s	35.1	0.0	36.1	12.1	17.5	12.8	3.9	46.2	46.2	17.6	49.8	50.8
Cycle Q Clear(g_c), s	35.1	0.0	36.1	12.1	17.5	12.8	3.9	46.2	46.2	17.6	49.8	50.8
Prop In Lane	1.00		0.07	1.00		1.00	1.00		0.54	1.00		0.66
Lane Grp Cap(c), veh/h	457	0	475	518	272	231	64	585	562	223	743	701
V/C Ratio(X)	0.98	0.00	1.02	0.63	0.87	0.66	0.78	1.02	1.03	1.11	0.91	0.92
Avail Cap(c_a), veh/h	457	0	475	611	321	273	66	585	562	223	743	701
HCM Platoon Ratio	1.00	1.00	1.00	1.00	1.00	1.00	1.00	1.00	1.00	1.00	1.00	1.00
Upstream Filter(I)	0.64	0.00	0.64	1.00	1.00	1.00	1.00	1.00	1.00	1.00	1.00	1.00
Uniform Delay (d), s/veh	51.6	0.0	52.0	56.2	58.5	56.5	66.9	46.9	46.9	61.2	38.0	38.3
Incr Delay (d2), s/veh	28.5	0.0	37.0	0.8	18.3	2.9	39.3	43.6	45.4	92.1	16.6	18.8
Initial Q Delay(d3),s/veh	0.0	0.0	0.0	0.0	0.0	0.0	0.0	0.0	0.0	0.0	0.0	0.0
%ile BackOfQ(50%),veh/ln	20.8	0.0	23.2	6.0	10.4	5.8	2.6	29.6	28.8	14.3	27.7	27.0
LnGrp Delay(d),s/veh	80.1	0.0	89.0	57.0	76.8	59.4	106.2	90.5	92.3	153.3	54.6	57.1
LnGrp LOS	F		F	E	E	E	F	F	F	F	D	E
Approach Vol, veh/h		930			717			1227			1562	
Approach Delay, s/veh		84.7			64.1			92.0			71.3	
Approach LOS		F			E			F			E	

Timer	1	2	3	4	5	6	7	8
Assigned Phs	1	2		4	5	6		8
Phs Duration (G+Y+Rc), s	22.0	51.6		41.0	9.5	64.2		25.4
Change Period (Y+Rc), s	4.4	* 5.4		4.9	4.4	5.4		4.9
Max Green Setting (Gmax), s	17.6	* 43		36.1	5.2	55.0		24.1
Max Q Clear Time (g_c+I1), s	19.6	48.2		38.1	5.9	52.8		19.5
Green Ext Time (p_c), s	0.0	0.0		0.0	0.0	1.9		0.9

Intersection Summary	
HCM 2010 Ctrl Delay	78.7
HCM 2010 LOS	E

Notes

User approved volume balancing among the lanes for turning movement.

Movement	EBL	EBT	EBR	WBL	WBT	WBR	NBL	NBT	NBR	SBL	SBT	SBR
Lane Configurations												
Volume (veh/h)	392	717	113	6	448	65	81	9	12	188	27	682
Number	5	2	12	1	6	16	3	8	18	7	4	14
Initial Q (Qb), veh	0	0	0	0	0	0	0	0	0	0	0	0
Ped-Bike Adj(A_pbT)	1.00		1.00	1.00		1.00	1.00		1.00	1.00		1.00
Parking Bus, Adj	1.00	1.00	1.00	1.00	1.00	1.00	1.00	1.00	1.00	1.00	1.00	1.00
Adj Sat Flow, veh/h/ln	1863	1863	1900	1863	1863	1900	1900	1863	1900	1900	1863	1863
Adj Flow Rate, veh/h	431	788	124	7	492	71	89	10	13	207	30	749
Adj No. of Lanes	1	2	0	1	2	0	0	1	0	0	1	1
Peak Hour Factor	0.91	0.91	0.91	0.91	0.91	0.91	0.91	0.91	0.91	0.91	0.91	0.91
Percent Heavy Veh, %	2	2	2	2	2	2	2	2	2	2	2	2
Cap, veh/h	460	1806	284	12	1048	151	142	17	13	417	52	835
Arrive On Green	0.26	0.59	0.59	0.01	0.34	0.34	0.27	0.27	0.27	0.27	0.27	0.27
Sat Flow, veh/h	1774	3065	482	1774	3107	446	310	63	49	1327	192	1583
Grp Volume(v), veh/h	431	455	457	7	279	284	112	0	0	237	0	749
Grp Sat Flow(s),veh/h/ln	1774	1770	1778	1774	1770	1784	422	0	0	1519	0	1583
Q Serve(g_s), s	26.2	15.6	15.6	0.4	13.7	13.8	14.4	0.0	0.0	0.0	0.0	29.5
Cycle Q Clear(g_c), s	26.2	15.6	15.6	0.4	13.7	13.8	29.3	0.0	0.0	14.9	0.0	29.5
Prop In Lane	1.00		0.27	1.00		0.25	0.79		0.12	0.87		1.00
Lane Grp Cap(c), veh/h	460	1043	1048	12	597	602	172	0	0	469	0	835
V/C Ratio(X)	0.94	0.44	0.44	0.56	0.47	0.47	0.65	0.00	0.00	0.51	0.00	0.90
Avail Cap(c_a), veh/h	526	1043	1048	65	597	602	172	0	0	469	0	835
HCM Platoon Ratio	1.00	1.00	1.00	1.00	1.00	1.00	1.00	1.00	1.00	1.00	1.00	1.00
Upstream Filter(I)	1.00	1.00	1.00	1.00	1.00	1.00	1.00	0.00	0.00	1.00	0.00	1.00
Uniform Delay (d), s/veh	39.9	12.5	12.5	54.4	28.7	28.7	45.9	0.0	0.0	34.9	0.0	23.3
Incr Delay (d2), s/veh	22.0	1.3	1.3	14.0	2.6	2.6	6.8	0.0	0.0	0.4	0.0	12.1
Initial Q Delay(d3),s/veh	0.0	0.0	0.0	0.0	0.0	0.0	0.0	0.0	0.0	0.0	0.0	0.0
%ile BackOfQ(50%),veh/ln	15.6	8.0	8.0	0.3	7.1	7.2	3.7	0.0	0.0	6.3	0.0	23.0
LnGrp Delay(d),s/veh	61.9	13.8	13.8	68.5	31.3	31.4	52.7	0.0	0.0	35.3	0.0	35.4
LnGrp LOS	E	B	B	E	C	C	D			D		D
Approach Vol, veh/h		1343			570			112			986	
Approach Delay, s/veh		29.3			31.8			52.7			35.4	
Approach LOS		C			C			D			D	

Timer	1	2	3	4	5	6	7	8
Assigned Phs	1	2		4	5	6		8
Phs Duration (G+Y+Rc), s	5.2	70.4		34.4	32.9	42.7		34.4
Change Period (Y+Rc), s	4.4	* 5.6		4.9	4.4	5.6		4.9
Max Green Setting (Gmax), s	4.8	* 62		29.5	32.6	33.0		29.5
Max Q Clear Time (g_c+I1), s	2.4	17.6		31.5	28.2	15.8		31.3
Green Ext Time (p_c), s	0.0	31.7		0.0	0.3	14.6		0.0

Intersection Summary	
HCM 2010 Ctrl Delay	32.6
HCM 2010 LOS	C

Notes

* HCM 2010 computational engine requires equal clearance times for the phases crossing the barrier.

Intersection	
Int Delay, s/veh	2

Movement	EBT	EBR	WBL	WBT	NBL	NBR
Vol, veh/h	972	49	47	850	24	27
Conflicting Peds, #/hr	0	18	0	0	0	0
Sign Control	Free	Free	Free	Free	Stop	Stop
RT Channelized	-	None	-	None	-	None
Storage Length	-	-	100	-	0	-
Veh in Median Storage, #	0	-	-	0	0	-
Grade, %	0	-	-	0	0	-
Peak Hour Factor	84	84	84	84	84	84
Heavy Vehicles, %	2	2	2	2	2	2
Mvmt Flow	1157	58	56	1012	29	32

Major/Minor	Major1		Major2		Minor1	
Conflicting Flow All	0	0	1215	0	1804	608
Stage 1	-	-	-	-	1186	-
Stage 2	-	-	-	-	618	-
Critical Hdwy	-	-	4.14	-	6.84	6.94
Critical Hdwy Stg 1	-	-	-	-	5.84	-
Critical Hdwy Stg 2	-	-	-	-	5.84	-
Follow-up Hdwy	-	-	2.22	-	3.52	3.32
Pot Cap-1 Maneuver	-	-	570	-	71	439
Stage 1	-	-	-	-	252	-
Stage 2	-	-	-	-	500	-
Platoon blocked, %	-	-		-		
Mov Cap-1 Maneuver	-	-	570	-	63	439
Mov Cap-2 Maneuver	-	-	-	-	63	-
Stage 1	-	-	-	-	252	-
Stage 2	-	-	-	-	444	-

Approach	EB	WB	NB
HCM Control Delay, s	0	0.6	66.9
HCM LOS			F

Minor Lane/Major Mvmt	NBLn1	EBT	EBR	WBL	WBT
Capacity (veh/h)	115	-	-	570	-
HCM Lane V/C Ratio	0.528	-	-	0.098	-
HCM Control Delay (s)	66.9	-	-	12	-
HCM Lane LOS	F	-	-	B	-
HCM 95th %tile Q(veh)	2.5	-	-	0.3	-

Movement	EBL	EBT	EBR	WBL	WBT	WBR	NBL	NBT	NBR	SBL	SBT	SBR
Lane Configurations												
Volume (veh/h)	220	909	78	49	756	174	52	49	45	284	22	281
Number	5	2	12	1	6	16	3	8	18	7	4	14
Initial Q (Qb), veh	0	0	0	0	0	0	0	0	0	0	0	0
Ped-Bike Adj(A_pbT)	1.00		0.97	1.00		0.98	1.00		0.98	1.00		0.91
Parking Bus, Adj	1.00	1.00	1.00	1.00	1.00	1.00	1.00	1.00	1.00	1.00	1.00	1.00
Adj Sat Flow, veh/h/ln	1863	1863	1900	1863	1863	1863	1863	1863	1900	1863	1863	1863
Adj Flow Rate, veh/h	237	977	84	53	813	187	56	53	48	322	0	302
Adj No. of Lanes	1	2	0	1	2	1	1	1	0	2	0	1
Peak Hour Factor	0.93	0.93	0.93	0.93	0.93	0.93	0.93	0.93	0.93	0.93	0.93	0.93
Percent Heavy Veh, %	2	2	2	2	2	2	2	2	2	2	2	2
Cap, veh/h	261	1795	154	255	1269	937	140	70	64	849	0	343
Arrive On Green	0.29	1.00	1.00	0.48	0.48	0.48	0.08	0.08	0.08	0.24	0.00	0.24
Sat Flow, veh/h	1774	3290	283	529	3539	1557	1774	894	809	3548	0	1434
Grp Volume(v), veh/h	237	525	536	53	813	187	56	0	101	322	0	302
Grp Sat Flow(s),veh/h/ln	1774	1770	1803	529	1770	1557	1774	0	1703	1774	0	1434
Q Serve(g_s), s	14.2	0.0	0.0	6.7	19.0	5.2	3.3	0.0	6.4	8.4	0.0	22.3
Cycle Q Clear(g_c), s	14.2	0.0	0.0	6.7	19.0	5.2	3.3	0.0	6.4	8.4	0.0	22.3
Prop In Lane	1.00		0.16	1.00		1.00	1.00		0.48	1.00		1.00
Lane Grp Cap(c), veh/h	261	965	984	255	1269	937	140	0	134	849	0	343
V/C Ratio(X)	0.91	0.54	0.54	0.21	0.64	0.20	0.40	0.00	0.75	0.38	0.00	0.88
Avail Cap(c_a), veh/h	268	965	984	255	1269	937	258	0	248	871	0	352
HCM Platoon Ratio	2.00	2.00	2.00	1.33	1.33	1.33	1.00	1.00	1.00	1.00	1.00	1.00
Upstream Filter(I)	1.00	1.00	1.00	1.00	1.00	1.00	1.00	0.00	1.00	1.00	0.00	1.00
Uniform Delay (d), s/veh	38.1	0.0	0.0	20.2	23.4	8.1	48.2	0.0	49.6	35.0	0.0	40.3
Incr Delay (d2), s/veh	31.3	2.2	2.2	0.5	1.2	0.1	1.8	0.0	8.2	0.1	0.0	20.6
Initial Q Delay(d3),s/veh	0.0	0.0	0.0	0.0	0.0	0.0	0.0	0.0	0.0	0.0	0.0	0.0
%ile BackOfQ(50%),veh/ln	9.1	0.6	0.6	1.0	9.5	3.5	1.7	0.0	3.3	4.1	0.0	10.8
LnGrp Delay(d),s/veh	69.4	2.2	2.2	20.7	24.6	8.2	50.0	0.0	57.8	35.1	0.0	60.9
LnGrp LOS	E	A	A	C	C	A	D		E	D		E
Approach Vol, veh/h		1298			1053			157			624	
Approach Delay, s/veh		14.5			21.5			55.0			47.6	
Approach LOS		B			C			E			D	

Timer	1	2	3	4	5	6	7	8
Assigned Phs		2		4	5	6		8
Phs Duration (G+Y+Rc), s		66.1		31.2	20.6	45.5		12.7
Change Period (Y+Rc), s		* 6.1		4.9	4.4	6.1		4.0
Max Green Setting (Gmax), s		* 53		27.0	16.6	31.0		16.0
Max Q Clear Time (g_c+I1), s		2.0		24.3	16.2	21.0		8.4
Green Ext Time (p_c), s		28.3		0.5	0.0	8.4		0.4

Intersection Summary	
HCM 2010 Ctrl Delay	25.5
HCM 2010 LOS	C

Notes

User approved volume balancing among the lanes for turning movement.

Intersection	
Int Delay, s/veh	15.1

Movement	EBL	EBT	WBT	WBR	SBL	SBR
Vol, veh/h	88	1150	865	23	46	114
Conflicting Peds, #/hr	0	0	0	3	0	0
Sign Control	Free	Free	Free	Free	Stop	Stop
RT Channelized	-	None	-	None	-	None
Storage Length	140	-	-	-	0	-
Veh in Median Storage, #	-	0	0	-	0	-
Grade, %	-	0	0	-	0	-
Peak Hour Factor	87	87	87	87	87	87
Heavy Vehicles, %	2	2	2	2	2	2
Mvmt Flow	101	1322	994	26	53	131

Major/Minor	Major1		Major2		Minor2	
Conflicting Flow All	1021	0	-	0	1870	510
Stage 1	-	-	-	-	1007	-
Stage 2	-	-	-	-	863	-
Critical Hdwy	4.14	-	-	-	6.84	6.94
Critical Hdwy Stg 1	-	-	-	-	5.84	-
Critical Hdwy Stg 2	-	-	-	-	5.84	-
Follow-up Hdwy	2.22	-	-	-	3.52	3.32
Pot Cap-1 Maneuver	675	-	-	-	64	509
Stage 1	-	-	-	-	314	-
Stage 2	-	-	-	-	373	-
Platoon blocked, %		-	-	-		
Mov Cap-1 Maneuver	675	-	-	-	54	509
Mov Cap-2 Maneuver	-	-	-	-	54	-
Stage 1	-	-	-	-	314	-
Stage 2	-	-	-	-	317	-

Approach	EB	WB	SB
HCM Control Delay, s	0.8	0	209.1
HCM LOS			F

Minor Lane/Major Mvmt	EBL	EBT	WBT	WBR	SBLn1
Capacity (veh/h)	675	-	-	-	149
HCM Lane V/C Ratio	0.15	-	-	-	1.234
HCM Control Delay (s)	11.3	-	-	-	209.1
HCM Lane LOS	B	-	-	-	F
HCM 95th %tile Q(veh)	0.5	-	-	-	10.8

Movement	EBL	EBT	EBR	WBL	WBT	WBR	NBL	NBT	NBR	SBL	SBT	SBR
Lane Configurations												
Volume (veh/h)	62	880	254	168	698	43	140	53	163	25	21	50
Number	5	2	12	1	6	16	3	8	18	7	4	14
Initial Q (Qb), veh	0	0	0	0	0	0	0	0	0	0	0	0
Ped-Bike Adj(A_pbT)	1.00		0.98	1.00		0.97	1.00		0.97	1.00		1.00
Parking Bus, Adj	1.00	1.00	1.00	1.00	1.00	1.00	1.00	1.00	1.00	1.00	1.00	1.00
Adj Sat Flow, veh/h/ln	1863	1863	1863	1863	1863	1900	1863	1863	1863	1863	1863	1863
Adj Flow Rate, veh/h	68	967	279	185	767	47	154	58	179	27	23	55
Adj No. of Lanes	1	2	1	1	2	0	1	1	1	1	1	1
Peak Hour Factor	0.91	0.91	0.91	0.91	0.91	0.91	0.91	0.91	0.91	0.91	0.91	0.91
Percent Heavy Veh, %	2	2	2	2	2	2	2	2	2	2	2	2
Cap, veh/h	87	1768	776	214	1932	118	183	319	454	36	165	140
Arrive On Green	0.05	0.50	0.50	0.12	0.57	0.57	0.10	0.17	0.17	0.02	0.09	0.09
Sat Flow, veh/h	1774	3539	1555	1774	3382	207	1774	1863	1533	1774	1863	1583
Grp Volume(v), veh/h	68	967	279	185	401	413	154	58	179	27	23	55
Grp Sat Flow(s),veh/h/ln	1774	1770	1555	1774	1770	1820	1774	1863	1533	1774	1863	1583
Q Serve(g_s), s	4.2	20.7	12.0	11.3	13.8	13.8	9.4	2.9	10.3	1.7	1.3	3.6
Cycle Q Clear(g_c), s	4.2	20.7	12.0	11.3	13.8	13.8	9.4	2.9	10.3	1.7	1.3	3.6
Prop In Lane	1.00		1.00	1.00		0.11	1.00		1.00	1.00		1.00
Lane Grp Cap(c), veh/h	87	1768	776	214	1011	1039	183	319	454	36	165	140
V/C Ratio(X)	0.78	0.55	0.36	0.86	0.40	0.40	0.84	0.18	0.39	0.75	0.14	0.39
Avail Cap(c_a), veh/h	144	1768	776	268	1011	1039	219	571	661	90	440	374
HCM Platoon Ratio	1.00	1.00	1.00	1.00	1.00	1.00	1.00	1.00	1.00	1.00	1.00	1.00
Upstream Filter(I)	1.00	1.00	1.00	1.00	1.00	1.00	1.00	1.00	1.00	1.00	1.00	1.00
Uniform Delay (d), s/veh	51.7	19.0	16.8	47.5	13.1	13.1	48.5	39.0	31.2	53.6	46.3	47.3
Incr Delay (d2), s/veh	5.5	1.2	1.3	17.7	1.2	1.1	18.9	0.1	0.2	10.7	0.1	0.7
Initial Q Delay(d3),s/veh	0.0	0.0	0.0	0.0	0.0	0.0	0.0	0.0	0.0	0.0	0.0	0.0
%ile BackOfQ(50%),veh/ln	2.2	10.4	5.4	6.6	7.0	7.2	5.5	1.5	4.4	0.9	0.7	1.6
LnGrp Delay(d),s/veh	57.3	20.2	18.1	65.2	14.2	14.2	67.4	39.1	31.4	64.2	46.4	48.0
LnGrp LOS	E	C	B	E	B	B	E	D	C	E	D	D
Approach Vol, veh/h		1314			999			391			105	
Approach Delay, s/veh		21.7			23.7			46.7			51.8	
Approach LOS		C			C			D			D	

Timer	1	2	3	4	5	6	7	8
Assigned Phs	1	2	3	4	5	6	7	8
Phs Duration (G+Y+Rc), s	17.7	61.6	15.7	14.9	9.8	69.5	6.6	24.0
Change Period (Y+Rc), s	4.4	* 6.7	4.4	* 5.2	4.4	6.7	4.4	5.2
Max Green Setting (Gmax), s	16.6	* 34	13.6	* 26	8.9	41.1	5.6	33.7
Max Q Clear Time (g_c+I1), s	13.3	22.7	11.4	5.6	6.2	15.8	3.7	12.3
Green Ext Time (p_c), s	0.1	6.8	0.0	0.7	0.0	11.0	0.0	0.7

Intersection Summary	
HCM 2010 Ctrl Delay	27.0
HCM 2010 LOS	C

Notes

* HCM 2010 computational engine requires equal clearance times for the phases crossing the barrier.

Movement	EBL	EBT	EBR	WBL	WBT	WBR	NBL	NBT	NBR	SBL	SBT	SBR
Lane Configurations												
Volume (veh/h)	19	26	33	62	39	38	63	943	98	41	980	23
Number	7	4	14	3	8	18	5	2	12	1	6	16
Initial Q (Qb), veh	0	0	0	0	0	0	0	0	0	0	0	0
Ped-Bike Adj(A_pbT)	0.99		0.94	0.95		0.98	1.00		0.96	1.00		0.96
Parking Bus, Adj	1.00	1.00	1.00	1.00	1.00	1.00	1.00	1.00	1.00	1.00	1.00	1.00
Adj Sat Flow, veh/h/ln	1900	1863	1900	1900	1863	1900	1863	1863	1900	1863	1863	1900
Adj Flow Rate, veh/h	20	27	34	65	41	40	66	982	102	43	1021	24
Adj No. of Lanes	0	1	0	0	1	0	1	2	0	1	2	0
Peak Hour Factor	0.96	0.96	0.96	0.96	0.96	0.96	0.96	0.96	0.96	0.96	0.96	0.96
Percent Heavy Veh, %	2	2	2	2	2	2	2	2	2	2	2	2
Cap, veh/h	120	151	150	199	124	94	84	1713	178	57	1825	43
Arrive On Green	0.22	0.22	0.22	0.22	0.22	0.22	0.05	0.53	0.53	0.03	0.52	0.52
Sat Flow, veh/h	248	674	667	557	553	419	1774	3222	335	1774	3531	83
Grp Volume(v), veh/h	81	0	0	146	0	0	66	539	545	43	512	533
Grp Sat Flow(s),veh/h/ln	1589	0	0	1528	0	0	1774	1770	1787	1774	1770	1844
Q Serve(g_s), s	0.0	0.0	0.0	2.6	0.0	0.0	2.6	14.4	14.4	1.7	13.8	13.8
Cycle Q Clear(g_c), s	2.7	0.0	0.0	5.4	0.0	0.0	2.6	14.4	14.4	1.7	13.8	13.8
Prop In Lane	0.25		0.42	0.45		0.27	1.00		0.19	1.00		0.05
Lane Grp Cap(c), veh/h	421	0	0	417	0	0	84	941	950	57	915	953
V/C Ratio(X)	0.19	0.00	0.00	0.35	0.00	0.00	0.79	0.57	0.57	0.75	0.56	0.56
Avail Cap(c_a), veh/h	649	0	0	637	0	0	117	941	950	106	915	953
HCM Platoon Ratio	1.00	1.00	1.00	1.00	1.00	1.00	1.00	1.00	1.00	1.00	1.00	1.00
Upstream Filter(I)	1.00	0.00	0.00	1.00	0.00	0.00	1.00	1.00	1.00	0.81	0.81	0.81
Uniform Delay (d), s/veh	22.1	0.0	0.0	23.0	0.0	0.0	33.0	11.0	11.0	33.6	11.5	11.5
Incr Delay (d2), s/veh	0.1	0.0	0.0	0.2	0.0	0.0	14.0	2.5	2.5	5.8	2.0	1.9
Initial Q Delay(d3),s/veh	0.0	0.0	0.0	0.0	0.0	0.0	0.0	0.0	0.0	0.0	0.0	0.0
%ile BackOfQ(50%),veh/ln	1.3	0.0	0.0	2.4	0.0	0.0	1.6	7.6	7.6	0.9	7.2	7.5
LnGrp Delay(d),s/veh	22.2	0.0	0.0	23.2	0.0	0.0	47.0	13.6	13.6	39.4	13.5	13.4
LnGrp LOS	C			C			D	B	B	D	B	B
Approach Vol, veh/h		81			146			1150			1088	
Approach Delay, s/veh		22.2			23.2			15.5			14.5	
Approach LOS		C			C			B			B	

Timer	1	2	3	4	5	6	7	8
Assigned Phs	1	2		4	5	6		8
Phs Duration (G+Y+Rc), s	6.7	42.7		20.6	7.7	41.7		20.6
Change Period (Y+Rc), s	4.4	* 5.5		4.9	4.4	5.5		4.9
Max Green Setting (Gmax), s	4.3	* 25		26.1	4.6	24.5		26.1
Max Q Clear Time (g_c+I1), s	3.7	16.4		4.7	4.6	15.8		7.4
Green Ext Time (p_c), s	0.0	8.2		0.9	0.0	8.1		0.8

Intersection Summary	
HCM 2010 Ctrl Delay	15.7
HCM 2010 LOS	B

Notes

* HCM 2010 computational engine requires equal clearance times for the phases crossing the barrier.

Movement	EBL	EBT	EBR	WBL	WBT	WBR	NBL	NBT	NBR	SBL	SBT	SBR
Lane Configurations												
Volume (veh/h)	108	102	94	73	132	90	121	663	52	146	913	78
Number	7	4	14	3	8	18	5	2	12	1	6	16
Initial Q (Qb), veh	0	0	0	0	0	0	0	0	0	0	0	0
Ped-Bike Adj(A_pbT)	0.99		0.97	0.99		0.97	1.00		0.95	1.00		0.94
Parking Bus, Adj	1.00	1.00	1.00	1.00	1.00	1.00	1.00	1.00	1.00	1.00	1.00	1.00
Adj Sat Flow, veh/h/ln	1863	1863	1900	1863	1863	1900	1863	1863	1900	1863	1863	1900
Adj Flow Rate, veh/h	110	104	96	74	135	92	123	677	53	149	932	80
Adj No. of Lanes	1	1	0	1	1	0	1	2	0	1	2	0
Peak Hour Factor	0.98	0.98	0.98	0.98	0.98	0.98	0.98	0.98	0.98	0.98	0.98	0.98
Percent Heavy Veh, %	2	2	2	2	2	2	2	2	2	2	2	2
Cap, veh/h	292	252	232	312	292	199	154	1420	111	183	1461	125
Arrive On Green	0.29	0.29	0.29	0.29	0.29	0.29	0.09	0.43	0.43	0.10	0.45	0.45
Sat Flow, veh/h	1139	879	811	1165	1020	695	1774	3311	259	1774	3281	282
Grp Volume(v), veh/h	110	0	200	74	0	227	123	361	369	149	503	509
Grp Sat Flow(s),veh/h/ln	1139	0	1690	1165	0	1716	1774	1770	1800	1774	1770	1793
Q Serve(g_s), s	7.0	0.0	7.7	4.4	0.0	8.7	5.4	11.7	11.8	6.6	17.6	17.6
Cycle Q Clear(g_c), s	15.7	0.0	7.7	12.1	0.0	8.7	5.4	11.7	11.8	6.6	17.6	17.6
Prop In Lane	1.00		0.48	1.00		0.41	1.00		0.14	1.00		0.16
Lane Grp Cap(c), veh/h	292	0	484	312	0	492	154	759	772	183	788	798
V/C Ratio(X)	0.38	0.00	0.41	0.24	0.00	0.46	0.80	0.48	0.48	0.81	0.64	0.64
Avail Cap(c_a), veh/h	422	0	676	444	0	686	169	759	772	191	788	798
HCM Platoon Ratio	1.00	1.00	1.00	1.00	1.00	1.00	1.00	1.00	1.00	1.00	1.00	1.00
Upstream Filter(I)	1.00	0.00	1.00	1.00	0.00	1.00	0.87	0.87	0.87	0.77	0.77	0.77
Uniform Delay (d), s/veh	29.9	0.0	23.1	28.0	0.0	23.5	35.8	16.4	16.4	35.1	17.2	17.2
Incr Delay (d2), s/veh	0.3	0.0	0.2	0.1	0.0	0.3	16.8	1.9	1.8	16.4	3.0	3.0
Initial Q Delay(d3),s/veh	0.0	0.0	0.0	0.0	0.0	0.0	0.0	0.0	0.0	0.0	0.0	0.0
%ile BackOfQ(50%),veh/ln	2.2	0.0	3.6	1.4	0.0	4.1	3.4	6.1	6.2	4.1	9.2	9.3
LnGrp Delay(d),s/veh	30.2	0.0	23.3	28.1	0.0	23.7	52.7	18.2	18.2	51.5	20.2	20.2
LnGrp LOS	C		C	C		C	D	B	B	D	C	C
Approach Vol, veh/h		310			301			853			1161	
Approach Delay, s/veh		25.8			24.8			23.2			24.2	
Approach LOS		C			C			C			C	

Timer	1	2	3	4	5	6	7	8
Assigned Phs	1	2		4	5	6		8
Phs Duration (G+Y+Rc), s	12.7	39.5		27.8	11.4	40.8		27.8
Change Period (Y+Rc), s	4.4	5.2		4.9	4.4	* 5.2		4.9
Max Green Setting (Gmax), s	8.6	24.9		32.0	7.6	* 26		32.0
Max Q Clear Time (g_c+I1), s	19.6	13.8		17.7	7.4	19.6		14.1
Green Ext Time (p_c), s	0.0	8.2		1.9	0.0	5.2		2.0

Intersection Summary	
HCM 2010 Ctrl Delay	24.1
HCM 2010 LOS	C

Notes

* HCM 2010 computational engine requires equal clearance times for the phases crossing the barrier.

Movement	EBL	EBT	EBR	WBL	WBT	WBR	NBL	NBT	NBR	SBL	SBT	SBR
Lane Configurations												
Volume (veh/h)	103	173	59	47	143	221	87	909	64	450	1113	82
Number	7	4	14	3	8	18	5	2	12	1	6	16
Initial Q (Qb), veh	0	0	0	0	0	0	0	0	0	0	0	0
Ped-Bike Adj(A_pbT)	0.96		0.97	0.99		0.91	1.00		0.96	1.00		0.97
Parking Bus, Adj	1.00	1.00	1.00	1.00	1.00	1.00	1.00	1.00	1.00	1.00	1.00	1.00
Adj Sat Flow, veh/h/ln	1863	1863	1900	1863	1863	1863	1863	1863	1900	1863	1863	1900
Adj Flow Rate, veh/h	111	186	63	51	154	238	94	977	69	484	1197	88
Adj No. of Lanes	1	1	0	1	1	1	1	2	0	1	2	0
Peak Hour Factor	0.93	0.93	0.93	0.93	0.93	0.93	0.93	0.93	0.93	0.93	0.93	0.93
Percent Heavy Veh, %	2	2	2	2	2	2	2	2	2	2	2	2
Cap, veh/h	252	339	115	223	478	372	119	1087	77	490	1782	131
Arrive On Green	0.26	0.26	0.26	0.26	0.26	0.26	0.07	0.33	0.33	0.28	0.53	0.53
Sat Flow, veh/h	951	1322	448	1118	1863	1447	1774	3343	236	1774	3336	245
Grp Volume(v), veh/h	111	0	249	51	154	238	94	517	529	484	634	651
Grp Sat Flow(s),veh/h/ln	951	0	1770	1118	1863	1447	1774	1770	1810	1774	1770	1811
Q Serve(g_s), s	10.7	0.0	12.2	4.1	6.7	14.6	5.2	27.9	27.9	27.2	26.0	26.1
Cycle Q Clear(g_c), s	17.4	0.0	12.2	16.3	6.7	14.6	5.2	27.9	27.9	27.2	26.0	26.1
Prop In Lane	1.00		0.25	1.00		1.00	1.00		0.13	1.00		0.14
Lane Grp Cap(c), veh/h	252	0	454	223	478	372	119	575	588	490	945	967
V/C Ratio(X)	0.44	0.00	0.55	0.23	0.32	0.64	0.79	0.90	0.90	0.99	0.67	0.67
Avail Cap(c_a), veh/h	275	0	495	249	522	405	153	575	588	490	945	967
HCM Platoon Ratio	1.00	1.00	1.00	1.00	1.00	1.00	1.00	1.00	1.00	1.00	1.00	1.00
Upstream Filter(I)	1.00	0.00	1.00	1.00	1.00	1.00	0.89	0.89	0.89	0.09	0.09	0.09
Uniform Delay (d), s/veh	37.2	0.0	32.1	39.2	30.1	33.1	46.0	32.2	32.2	36.0	16.9	16.9
Incr Delay (d2), s/veh	0.4	0.0	0.4	0.2	0.1	2.1	13.1	17.7	17.4	9.7	0.3	0.3
Initial Q Delay(d3),s/veh	0.0	0.0	0.0	0.0	0.0	0.0	0.0	0.0	0.0	0.0	0.0	0.0
%ile BackOfQ(50%),veh/ln	2.8	0.0	6.0	1.3	3.5	6.1	3.0	16.3	16.7	14.6	12.8	13.1
LnGrp Delay(d),s/veh	37.6	0.0	32.5	39.4	30.2	35.1	59.1	49.9	49.6	45.7	17.3	17.3
LnGrp LOS	D		C	D	C	D	E	D	D	D	B	B
Approach Vol, veh/h		360			443			1140			1769	
Approach Delay, s/veh		34.1			33.9			50.5			25.1	
Approach LOS		C			C			D			C	

Timer	1	2	3	4	5	6	7	8
Assigned Phs	1	2		4	5	6		8
Phs Duration (G+Y+Rc), s	32.0	37.4		30.6	11.1	58.3		30.6
Change Period (Y+Rc), s	4.4	4.9		4.9	4.4	4.9		4.9
Max Green Setting (Gmax), s	27.6	30.2		28.0	8.6	49.2		28.0
Max Q Clear Time (g_c+I1), s	19.2	29.9		19.4	7.2	28.1		18.3
Green Ext Time (p_c), s	0.0	0.3		1.9	0.0	20.5		2.0

Intersection Summary	
HCM 2010 Ctrl Delay	34.8
HCM 2010 LOS	C

Movement	EBL	EBT	EBR	WBL	WBT	WBR	NBL	NBT	NBR	SBL	SBT	SBR
Lane Configurations												
Volume (veh/h)	108	618	427	748	845	193	259	547	616	165	740	132
Number	5	2	12	1	6	16	3	8	18	7	4	14
Initial Q (Qb), veh	0	0	0	0	0	0	0	0	0	0	0	0
Ped-Bike Adj(A_pbT)	1.00		0.98	1.00		0.98	1.00		0.96	1.00		0.87
Parking Bus, Adj	1.00	1.00	1.00	1.00	1.00	1.00	1.00	1.00	1.00	1.00	1.00	1.00
Adj Sat Flow, veh/h/ln	1863	1863	1863	1863	1863	1863	1863	1863	1863	1863	1863	1900
Adj Flow Rate, veh/h	114	651	449	787	889	203	273	576	648	174	779	139
Adj No. of Lanes	1	2	1	2	2	1	1	2	1	2	2	0
Peak Hour Factor	0.95	0.95	0.95	0.95	0.95	0.95	0.95	0.95	0.95	0.95	0.95	0.95
Percent Heavy Veh, %	2	2	2	2	2	2	2	2	2	2	2	2
Cap, veh/h	136	1137	496	774	1661	731	215	1223	525	157	789	141
Arrive On Green	0.08	0.32	0.32	0.22	0.47	0.47	0.12	0.35	0.35	0.05	0.27	0.27
Sat Flow, veh/h	1774	3539	1545	3442	3539	1558	1774	3539	1520	3442	2927	522
Grp Volume(v), veh/h	114	651	449	787	889	203	273	576	648	174	471	447
Grp Sat Flow(s),veh/h/ln	1774	1770	1545	1721	1770	1558	1774	1770	1520	1721	1770	1680
Q Serve(g_s), s	9.2	22.2	40.3	32.6	25.8	11.5	17.6	18.4	50.1	6.6	38.4	38.4
Cycle Q Clear(g_c), s	9.2	22.2	40.3	32.6	25.8	11.5	17.6	18.4	50.1	6.6	38.4	38.4
Prop In Lane	1.00		1.00	1.00		1.00	1.00		1.00	1.00		0.31
Lane Grp Cap(c), veh/h	136	1137	496	774	1661	731	215	1223	525	157	477	453
V/C Ratio(X)	0.84	0.57	0.90	1.02	0.54	0.28	1.27	0.47	1.23	1.11	0.99	0.99
Avail Cap(c_a), veh/h	230	1137	496	774	1661	731	215	1223	525	157	477	453
HCM Platoon Ratio	1.00	1.00	1.00	1.00	1.00	1.00	1.00	1.00	1.00	1.00	1.00	1.00
Upstream Filter(I)	1.00	1.00	1.00	1.00	1.00	1.00	0.55	0.55	0.55	1.00	1.00	1.00
Uniform Delay (d), s/veh	66.0	40.9	47.1	56.2	27.3	23.5	63.7	37.1	47.4	69.2	52.7	52.7
Incr Delay (d2), s/veh	5.0	2.1	22.5	36.7	1.2	0.9	139.4	0.7	114.4	104.7	38.0	39.2
Initial Q Delay(d3),s/veh	0.0	0.0	0.0	0.0	0.0	0.0	0.0	0.0	0.0	0.0	0.0	0.0
%ile BackOfQ(50%),veh/ln	4.7	11.2	20.2	19.4	12.9	5.2	16.9	9.2	37.7	5.4	23.7	22.7
LnGrp Delay(d),s/veh	71.1	43.0	69.6	92.9	28.5	24.4	203.1	37.8	161.9	173.9	90.7	91.9
LnGrp LOS	E	D	E	F	C	C	F	D	F	F	F	F
Approach Vol, veh/h		1214			1879			1497			1092	
Approach Delay, s/veh		55.5			55.0			121.7			104.5	
Approach LOS		E			E			F			F	

Timer	1	2	3	4	5	6	7	8
Assigned Phs	1	2	3	4	5	6	7	8
Phs Duration (G+Y+Rc), s	37.0	52.2	22.0	44.3	15.6	73.6	11.0	55.3
Change Period (Y+Rc), s	4.4	5.3	4.4	5.2	4.4	5.3	4.4	* 5.2
Max Green Setting (Gmax), s	32.6	36.7	17.6	38.8	18.8	50.5	6.6	* 50
Max Q Clear Time (g_c+I1), s	34.6	42.3	19.6	40.4	11.2	27.8	8.6	52.1
Green Ext Time (p_c), s	0.0	0.0	0.0	0.0	0.1	18.9	0.0	0.0

Intersection Summary	
HCM 2010 Ctrl Delay	82.2
HCM 2010 LOS	F

Notes

* HCM 2010 computational engine requires equal clearance times for the phases crossing the barrier.

Movement	WBL	WBR	NBT	NBR	SBL	SBT
Lane Configurations						
Volume (veh/h)	737	193	1994	1007	536	1651
Number	3	18	2	12	1	6
Initial Q (Qb), veh	0	0	0	0	0	0
Ped-Bike Adj(A_pbT)	1.00	1.00		0.98	1.00	
Parking Bus, Adj	1.00	1.00	1.00	1.00	1.00	1.00
Adj Sat Flow, veh/h/ln	1863	1863	1863	1863	1863	1863
Adj Flow Rate, veh/h	768	201	2077	1049	558	1720
Adj No. of Lanes	2	1	2	1	2	2
Peak Hour Factor	0.96	0.96	0.96	0.96	0.96	0.96
Percent Heavy Veh, %	2	2	2	2	2	2
Cap, veh/h	728	325	1885	1148	518	2521
Arrive On Green	0.21	0.21	0.53	0.53	0.15	0.71
Sat Flow, veh/h	3548	1583	3632	1546	3442	3632
Grp Volume(v), veh/h	768	201	2077	1049	558	1720
Grp Sat Flow(s),veh/h/ln	1774	1583	1770	1546	1721	1770
Q Serve(g_s), s	30.8	17.4	80.0	80.0	22.6	40.8
Cycle Q Clear(g_c), s	30.8	17.4	80.0	80.0	22.6	40.8
Prop In Lane	1.00	1.00		1.00	1.00	
Lane Grp Cap(c), veh/h	728	325	1885	1148	518	2521
V/C Ratio(X)	1.06	0.62	1.10	0.91	1.08	0.68
Avail Cap(c_a), veh/h	728	325	1885	1148	518	2536
HCM Platoon Ratio	1.00	1.00	1.00	1.00	1.00	1.00
Upstream Filter(I)	1.00	1.00	1.00	1.00	1.00	1.00
Uniform Delay (d), s/veh	59.7	54.3	35.1	15.7	63.8	12.1
Incr Delay (d2), s/veh	48.9	2.7	54.6	11.3	62.0	1.0
Initial Q Delay(d3),s/veh	0.0	0.0	0.0	0.0	0.0	0.0
%ile BackOfQ(50%),veh/ln	20.0	7.9	53.3	47.0	15.2	20.2
LnGrp Delay(d),s/veh	108.6	57.0	89.7	27.0	125.8	13.1
LnGrp LOS	F	E	F	C	F	B
Approach Vol, veh/h	969		3126			2278
Approach Delay, s/veh	97.9		68.6			40.7
Approach LOS	F		E			D

Timer	1	2	3	4	5	6	7	8
Assigned Phs	1	2				6		8
Phs Duration (G+Y+Rc), s	37.0	86.2				113.2		37.0
Change Period (Y+Rc), s	4.4	6.2				* 6.2		6.2
Max Green Setting (Gmax), s	32.6	79.8				* 1.1E2		30.8
Max Q Clear Time (g_c+I1), s	24.6	82.0				42.8		32.8
Green Ext Time (p_c), s	0.0	0.0				64.1		0.0

Intersection Summary	
HCM 2010 Ctrl Delay	63.1
HCM 2010 LOS	E

Notes

User approved volume balancing among the lanes for turning movement.

Movement	EBL	EBT	WBT	WBR	SBL	SBR
Lane Configurations						
Volume (veh/h)	221	1231	635	456	347	328
Number	5	2	6	16	7	14
Initial Q (Qb), veh	0	0	0	0	0	0
Ped-Bike Adj(A_pbT)	1.00			1.00	1.00	1.00
Parking Bus, Adj	1.00	1.00	1.00	1.00	1.00	1.00
Adj Sat Flow, veh/h/ln	1863	1863	1863	1863	1863	1863
Adj Flow Rate, veh/h	233	1296	668	480	466	237
Adj No. of Lanes	1	2	2	1	2	1
Peak Hour Factor	0.95	0.95	0.95	0.95	0.95	0.95
Percent Heavy Veh, %	2	2	2	2	2	2
Cap, veh/h	218	2189	1503	998	729	325
Arrive On Green	0.12	0.62	0.42	0.42	0.21	0.21
Sat Flow, veh/h	1774	3632	3632	1583	3548	1583
Grp Volume(v), veh/h	233	1296	668	480	466	237
Grp Sat Flow(s),veh/h/ln	1774	1770	1770	1583	1774	1583
Q Serve(g_s), s	7.6	13.6	8.3	10.0	7.4	8.7
Cycle Q Clear(g_c), s	7.6	13.6	8.3	10.0	7.4	8.7
Prop In Lane	1.00			1.00	1.00	1.00
Lane Grp Cap(c), veh/h	218	2189	1503	998	729	325
V/C Ratio(X)	1.07	0.59	0.44	0.48	0.64	0.73
Avail Cap(c_a), veh/h	218	2229	1566	1026	865	386
HCM Platoon Ratio	1.00	1.00	1.00	1.00	1.00	1.00
Upstream Filter(I)	1.00	1.00	1.00	1.00	1.00	1.00
Uniform Delay (d), s/veh	27.2	7.1	12.6	6.1	22.5	23.0
Incr Delay (d2), s/veh	80.8	0.6	0.3	0.6	2.2	8.2
Initial Q Delay(d3),s/veh	0.0	0.0	0.0	0.0	0.0	0.0
%ile BackOfQ(50%),veh/ln	8.6	6.7	4.1	6.8	3.8	8.0
LnGrp Delay(d),s/veh	108.0	7.7	12.9	6.6	24.7	31.1
LnGrp LOS	F	A	B	A	C	C
Approach Vol, veh/h		1529	1148		703	
Approach Delay, s/veh		23.0	10.3		26.9	
Approach LOS		C	B		C	

Timer	1	2	3	4	5	6	7	8
Assigned Phs		2		4	5	6		
Phs Duration (G+Y+Rc), s		44.3		17.6	12.0	32.3		
Change Period (Y+Rc), s		6.0		4.9	4.4	* 6		
Max Green Setting (Gmax), s		39.0		15.1	7.6	* 27		
Max Q Clear Time (g_c+I1), s		15.6		10.7	9.6	12.0		
Green Ext Time (p_c), s		21.1		2.1	0.0	14.3		

Intersection Summary	
HCM 2010 Ctrl Delay	19.5
HCM 2010 LOS	B

Notes

User approved volume balancing among the lanes for turning movement.

Movement	EBL	EBT	EBR	WBL	WBT	WBR	NBL	NBT	NBR	SBL	SBT	SBR
Lane Configurations												
Volume (veh/h)	103	1997	59	65	1122	81	41	9	41	205	17	113
Number	5	2	12	1	6	16	3	8	18	7	4	14
Initial Q (Qb), veh	0	0	0	0	0	0	0	0	0	0	0	0
Ped-Bike Adj(A_pbT)	1.00		1.00	1.00		1.00	1.00		1.00	1.00		1.00
Parking Bus, Adj	1.00	1.00	1.00	1.00	1.00	1.00	1.00	1.00	1.00	1.00	1.00	1.00
Adj Sat Flow, veh/h/ln	1863	1863	1900	1863	1863	1900	1900	1863	1863	1863	1863	1900
Adj Flow Rate, veh/h	110	2124	63	69	1194	86	44	10	44	218	18	120
Adj No. of Lanes	1	2	0	1	2	0	0	1	1	1	1	0
Peak Hour Factor	0.94	0.94	0.94	0.94	0.94	0.94	0.94	0.94	0.94	0.94	0.94	0.94
Percent Heavy Veh, %	2	2	2	2	2	2	2	2	2	2	2	2
Cap, veh/h	133	2215	65	59	1974	142	212	44	356	215	47	316
Arrive On Green	0.07	0.63	0.63	0.03	0.59	0.59	0.23	0.23	0.23	0.23	0.23	0.23
Sat Flow, veh/h	1774	3510	104	1774	3349	241	734	194	1583	1345	211	1404
Grp Volume(v), veh/h	110	1065	1122	69	630	650	54	0	44	218	0	138
Grp Sat Flow(s),veh/h/ln	1774	1770	1844	1774	1770	1820	927	0	1583	1345	0	1615
Q Serve(g_s), s	8.5	77.2	79.1	4.6	31.4	31.5	4.3	0.0	3.1	16.8	0.0	10.0
Cycle Q Clear(g_c), s	8.5	77.2	79.1	4.6	31.4	31.5	14.3	0.0	3.1	31.1	0.0	10.0
Prop In Lane	1.00		0.06	1.00		0.13	0.81		1.00	1.00		0.87
Lane Grp Cap(c), veh/h	133	1117	1164	59	1043	1073	256	0	356	215	0	363
V/C Ratio(X)	0.83	0.95	0.96	1.17	0.60	0.61	0.21	0.00	0.12	1.01	0.00	0.38
Avail Cap(c_a), veh/h	212	1144	1192	59	1043	1073	256	0	356	215	0	363
HCM Platoon Ratio	1.00	1.00	1.00	1.00	1.00	1.00	1.00	1.00	1.00	1.00	1.00	1.00
Upstream Filter(I)	1.00	1.00	1.00	1.00	1.00	1.00	1.00	0.00	1.00	1.00	0.00	1.00
Uniform Delay (d), s/veh	63.0	23.7	24.0	66.8	18.1	18.1	50.1	0.0	42.7	62.7	0.0	45.4
Incr Delay (d2), s/veh	6.9	17.7	18.8	170.0	2.6	2.5	0.2	0.0	0.1	64.3	0.0	0.2
Initial Q Delay(d3),s/veh	0.0	0.0	0.0	0.0	0.0	0.0	0.0	0.0	0.0	0.1	0.0	0.0
%ile BackOfQ(50%),veh/ln	4.4	42.8	45.9	5.0	16.0	16.5	1.8	0.0	1.4	12.1	0.0	4.5
LnGrp Delay(d),s/veh	70.0	41.3	42.8	236.9	20.7	20.6	50.2	0.0	42.7	127.1	0.0	45.6
LnGrp LOS	E	D	D	F	C	C	D		D	F		D
Approach Vol, veh/h		2297			1349			98			356	
Approach Delay, s/veh		43.4			31.7			46.9			95.5	
Approach LOS		D			C			D			F	

Timer	1	2	3	4	5	6	7	8
Assigned Phs	1	2		4	5	6		8
Phs Duration (G+Y+Rc), s	9.0	93.2		36.0	14.8	87.4		36.0
Change Period (Y+Rc), s	4.4	* 6		4.9	4.4	6.0		4.9
Max Green Setting (Gmax), s	4.6	* 89		31.1	16.5	77.1		31.1
Max Q Clear Time (g_c+I1), s	10.6	81.1		33.1	10.5	33.5		16.3
Green Ext Time (p_c), s	0.0	6.1		0.0	0.1	43.5		1.0

Intersection Summary	
HCM 2010 Ctrl Delay	44.2
HCM 2010 LOS	D

Notes

* HCM 2010 computational engine requires equal clearance times for the phases crossing the barrier.

Movement	EBL	EBT	EBR	WBL	WBT	WBR	NBL	NBT	NBR	SBL	SBT	SBR
Lane Configurations												
Volume (veh/h)	212	1232	417	389	752	360	155	116	437	455	150	161
Number	5	2	12	1	6	16	3	8	18	7	4	14
Initial Q (Qb), veh	0	0	0	0	0	0	0	0	0	0	0	0
Ped-Bike Adj(A_pbT)	1.00		1.00	1.00		0.98	1.00		1.00	1.00		1.00
Parking Bus, Adj	1.00	1.00	1.00	1.00	1.00	1.00	1.00	1.00	1.00	1.00	1.00	1.00
Adj Sat Flow, veh/h/ln	1863	1863	1863	1863	1863	1863	1863	1863	1863	1863	1863	1863
Adj Flow Rate, veh/h	221	1283	453	423	783	375	168	126	475	474	163	168
Adj No. of Lanes	1	2	1	1	2	1	1	2	1	2	1	1
Peak Hour Factor	0.96	0.96	0.92	0.92	0.96	0.96	0.92	0.92	0.92	0.96	0.92	0.96
Percent Heavy Veh, %	2	2	2	2	2	2	2	2	2	2	2	2
Cap, veh/h	247	1368	786	396	1666	960	194	419	541	493	283	460
Arrive On Green	0.14	0.39	0.39	0.22	0.47	0.47	0.11	0.12	0.12	0.14	0.15	0.15
Sat Flow, veh/h	1774	3539	1583	1774	3539	1558	1774	3539	1583	3442	1863	1580
Grp Volume(v), veh/h	221	1283	453	423	783	375	168	126	475	474	163	168
Grp Sat Flow(s),veh/h/ln	1774	1770	1583	1774	1770	1558	1774	1770	1583	1721	1863	1580
Q Serve(g_s), s	16.8	47.8	27.7	30.6	20.6	16.8	12.8	4.5	16.2	18.7	11.1	11.5
Cycle Q Clear(g_c), s	16.8	47.8	27.7	30.6	20.6	16.8	12.8	4.5	16.2	18.7	11.1	11.5
Prop In Lane	1.00		1.00	1.00		1.00	1.00		1.00	1.00		1.00
Lane Grp Cap(c), veh/h	247	1368	786	396	1666	960	194	419	541	493	283	460
V/C Ratio(X)	0.89	0.94	0.58	1.07	0.47	0.39	0.86	0.30	0.88	0.96	0.58	0.36
Avail Cap(c_a), veh/h	367	1447	821	396	1666	960	254	419	541	493	283	460
HCM Platoon Ratio	1.00	1.00	1.00	1.00	1.00	1.00	1.00	1.00	1.00	1.00	1.00	1.00
Upstream Filter(I)	1.00	1.00	1.00	1.00	1.00	1.00	1.00	1.00	1.00	1.00	1.00	1.00
Uniform Delay (d), s/veh	57.9	40.4	24.3	53.2	24.6	13.4	60.0	55.2	42.4	58.3	54.0	38.5
Incr Delay (d2), s/veh	13.0	11.3	0.7	64.1	0.1	0.1	20.7	0.4	15.1	31.0	1.9	0.2
Initial Q Delay(d3),s/veh	0.0	0.0	0.0	0.0	0.0	0.0	0.0	0.0	0.0	0.0	0.0	0.0
%ile BackOfQ(50%),veh/ln	9.1	25.5	12.2	22.0	10.0	7.2	7.4	2.2	19.2	11.0	5.9	5.1
LnGrp Delay(d),s/veh	71.0	51.7	25.0	117.3	24.7	13.5	80.6	55.6	57.5	89.3	55.9	38.7
LnGrp LOS	E	D	C	F	C	B	F	E	E	F	E	D
Approach Vol, veh/h		1957			1581			769			805	
Approach Delay, s/veh		47.7			46.8			62.3			72.0	
Approach LOS		D			D			E			E	

Timer	1	2	3	4	5	6	7	8
Assigned Phs	1	2	3	4	5	6	7	8
Phs Duration (G+Y+Rc), s	35.0	57.3	19.4	25.2	23.5	68.9	24.0	20.6
Change Period (Y+Rc), s	4.5	4.5	4.5	4.5	4.5	4.5	4.5	4.5
Max Green Setting (Gmax), s	30.5	55.9	19.5	16.1	28.2	58.2	19.5	16.1
Max Q Clear Time (g_c+I1), s	22.6	49.8	14.8	13.5	18.8	22.6	20.7	18.2
Green Ext Time (p_c), s	0.0	3.1	0.2	1.0	0.2	17.5	0.0	0.0

Intersection Summary	
HCM 2010 Ctrl Delay	53.5
HCM 2010 LOS	D

Movement	EBL	EBT	EBR	WBL	WBT	WBR	NBL	NBT	NBR	SBL	SBT	SBR
Lane Configurations												
Volume (veh/h)	5	1855	348	248	877	10	345	4	524	11	4	0
Number	5	2	12	1	6	16	3	8	18	7	4	14
Initial Q (Qb), veh	0	0	0	0	0	0	0	0	0	0	0	0
Ped-Bike Adj(A_pbT)	1.00		0.99	1.00		0.97	1.00		0.98	1.00		1.00
Parking Bus, Adj	1.00	1.00	1.00	1.00	1.00	1.00	1.00	1.00	1.00	1.00	1.00	1.00
Adj Sat Flow, veh/h/ln	1863	1863	1900	1863	1863	1900	1900	1863	1863	1900	1863	1900
Adj Flow Rate, veh/h	5	2016	378	270	953	11	375	4	570	12	4	0
Adj No. of Lanes	1	3	0	2	2	0	0	1	1	0	1	0
Peak Hour Factor	0.92	0.92	0.92	0.92	0.92	0.92	0.92	0.92	0.92	0.92	0.92	0.92
Percent Heavy Veh, %	2	2	2	2	2	2	2	2	2	2	2	2
Cap, veh/h	9	2310	422	326	2239	26	410	4	551	46	9	0
Arrive On Green	0.01	0.54	0.54	0.09	0.63	0.63	0.26	0.26	0.26	0.26	0.26	0.00
Sat Flow, veh/h	1774	4314	788	3442	3582	41	1386	15	1554	0	35	0
Grp Volume(v), veh/h	5	1573	821	270	471	493	379	0	570	16	0	0
Grp Sat Flow(s),veh/h/ln	1774	1695	1712	1721	1770	1854	1401	0	1554	35	0	0
Q Serve(g_s), s	0.4	54.7	58.3	10.5	18.5	18.5	0.0	0.0	35.1	0.0	0.0	0.0
Cycle Q Clear(g_c), s	0.4	54.7	58.3	10.5	18.5	18.5	35.1	0.0	35.1	35.1	0.0	0.0
Prop In Lane	1.00		0.46	1.00		0.02	0.99		1.00	0.75		0.00
Lane Grp Cap(c), veh/h	9	1815	917	326	1106	1159	414	0	551	55	0	0
V/C Ratio(X)	0.56	0.87	0.90	0.83	0.43	0.43	0.92	0.00	1.03	0.29	0.00	0.00
Avail Cap(c_a), veh/h	52	1815	917	698	1106	1159	414	0	551	55	0	0
HCM Platoon Ratio	1.00	1.00	1.00	1.00	1.00	1.00	1.00	1.00	1.00	1.00	1.00	1.00
Upstream Filter(I)	0.30	0.30	0.30	0.90	0.90	0.90	1.00	0.00	1.00	1.00	0.00	0.00
Uniform Delay (d), s/veh	67.5	27.4	28.2	60.5	13.0	13.0	51.3	0.0	44.1	48.2	0.0	0.0
Incr Delay (d2), s/veh	6.0	1.9	4.7	1.9	1.1	1.0	24.3	0.0	47.4	1.5	0.0	0.0
Initial Q Delay(d3),s/veh	0.0	0.0	0.0	0.0	0.0	0.0	0.0	0.0	0.0	0.0	0.0	0.0
%ile BackOfQ(50%),veh/ln	0.2	26.0	28.6	5.1	9.4	9.8	17.0	0.0	27.9	0.6	0.0	0.0
LnGrp Delay(d),s/veh	73.5	29.3	32.9	62.3	14.1	14.1	75.6	0.0	91.5	49.7	0.0	0.0
LnGrp LOS	E	C	C	E	B	B	E		F	D		
Approach Vol, veh/h		2399			1234			949			16	
Approach Delay, s/veh		30.6			24.6			85.1			49.7	
Approach LOS		C			C			F			D	

Timer	1	2	3	4	5	6	7	8
Assigned Phs	1	2		4	5	6		8
Phs Duration (G+Y+Rc), s	17.3	78.7		40.0	5.1	90.9		40.0
Change Period (Y+Rc), s	4.4	5.9		4.9	4.4	* 5.9		4.9
Max Green Setting (Gmax), s	27.6	58.1		35.1	4.0	* 82		35.1
Max Q Clear Time (g_c+I1), s	12.5	60.3		37.1	2.4	20.5		37.1
Green Ext Time (p_c), s	0.4	0.0		0.0	0.0	49.8		0.0

Intersection Summary	
HCM 2010 Ctrl Delay	40.3
HCM 2010 LOS	D

Notes

* HCM 2010 computational engine requires equal clearance times for the phases crossing the barrier.

Movement	EBL	EBT	EBR	WBL	WBT	WBR	NBL	NBT	NBR	SBL	SBT	SBR
Lane Configurations												
Volume (veh/h)	9	2518	72	228	1007	0	63	0	290	0	0	0
Number	5	2	12	1	6	16	3	8	18			
Initial Q (Qb), veh	0	0	0	0	0	0	0	0	0			
Ped-Bike Adj(A_pbT)	1.00		1.00	1.00		1.00	1.00		1.00			
Parking Bus, Adj	1.00	1.00	1.00	1.00	1.00	1.00	1.00	1.00	1.00			
Adj Sat Flow, veh/h/ln	1863	1863	1900	1863	1863	0	1863	0	1863			
Adj Flow Rate, veh/h	10	2679	77	243	1071	0	67	0	309			
Adj No. of Lanes	1	3	0	2	2	0	1	0	1			
Peak Hour Factor	0.92	0.94	0.94	0.94	0.94	0.92	0.94	0.92	0.94			
Percent Heavy Veh, %	2	2	2	2	2	0	2	0	2			
Cap, veh/h	17	2856	81	214	2190	0	387	0	345			
Arrive On Green	0.01	0.56	0.56	0.06	0.62	0.00	0.22	0.00	0.22			
Sat Flow, veh/h	1774	5082	145	3442	3632	0	1774	0	1583			
Grp Volume(v), veh/h	10	1781	975	243	1071	0	67	0	309			
Grp Sat Flow(s),veh/h/ln	1774	1695	1836	1721	1770	0	1774	0	1583			
Q Serve(g_s), s	0.5	43.6	44.6	5.6	14.9	0.0	2.8	0.0	17.1			
Cycle Q Clear(g_c), s	0.5	43.6	44.6	5.6	14.9	0.0	2.8	0.0	17.1			
Prop In Lane	1.00		0.08	1.00		0.00	1.00		1.00			
Lane Grp Cap(c), veh/h	17	1906	1032	214	2190	0	387	0	345			
V/C Ratio(X)	0.57	0.93	0.94	1.13	0.49	0.00	0.17	0.00	0.90			
Avail Cap(c_a), veh/h	79	1906	1032	214	2190	0	611	0	545			
HCM Platoon Ratio	1.00	1.00	1.00	1.00	1.00	1.00	1.00	1.00	1.00			
Upstream Filter(I)	0.17	0.17	0.17	1.00	1.00	0.00	1.00	0.00	1.00			
Uniform Delay (d), s/veh	44.4	18.2	18.4	42.2	9.4	0.0	28.6	0.0	34.2			
Incr Delay (d2), s/veh	4.9	2.1	4.2	102.5	0.8	0.0	0.1	0.0	7.8			
Initial Q Delay(d3),s/veh	0.0	0.0	0.0	0.0	0.0	0.0	0.0	0.0	0.0			
%ile BackOfQ(50%),veh/ln	0.3	20.8	23.7	5.7	7.4	0.0	1.4	0.0	8.2			
LnGrp Delay(d),s/veh	49.2	20.3	22.7	144.7	10.2	0.0	28.7	0.0	42.0			
LnGrp LOS	D	C	C	F	B		C		D			
Approach Vol, veh/h		2766			1314			376				
Approach Delay, s/veh		21.2			35.0			39.6				
Approach LOS		C			D			D				

Timer	1	2	3	4	5	6	7	8
Assigned Phs	1	2			5	6		8
Phs Duration (G+Y+Rc), s	10.0	56.0			4.9	61.1		24.0
Change Period (Y+Rc), s	4.4	5.4			4.0	* 5.4		4.4
Max Green Setting (Gmax), s	5.6	39.2			4.0	* 41		31.0
Max Q Clear Time (g_c+I1), s	7.6	46.6			2.5	16.9		19.1
Green Ext Time (p_c), s	0.0	0.0			0.0	23.9		0.5

Intersection Summary	
HCM 2010 Ctrl Delay	26.8
HCM 2010 LOS	C

Notes

* HCM 2010 computational engine requires equal clearance times for the phases crossing the barrier.

Movement	EBL	EBT	EBR	WBL	WBT	WBR	NBL	NBT	NBR	SBL	SBT	SBR
Lane Configurations												
Volume (veh/h)	12	2638	223	800	1284	20	120	1	330	22	1	2
Number	5	2	12	1	6	16	3	8	18	7	4	14
Initial Q (Qb), veh	0	0	0	0	0	0	0	0	0	0	0	0
Ped-Bike Adj(A_pbT)	1.00		1.00	1.00		1.00	0.99		1.00	1.00		0.99
Parking Bus, Adj	1.00	1.00	1.00	1.00	1.00	1.00	1.00	1.00	1.00	1.00	1.00	1.00
Adj Sat Flow, veh/h/ln	1863	1863	1900	1863	1863	1900	1863	1863	1863	1863	1863	1900
Adj Flow Rate, veh/h	12	2748	232	833	1338	21	125	0	345	23	1	2
Adj No. of Lanes	1	3	0	2	3	0	1	0	2	1	1	0
Peak Hour Factor	0.96	0.96	0.96	0.96	0.96	0.96	0.96	0.96	0.96	0.96	0.96	0.96
Percent Heavy Veh, %	2	2	2	2	2	2	2	2	2	2	2	2
Cap, veh/h	19	2771	228	679	3948	62	222	0	399	178	70	139
Arrive On Green	0.01	0.58	0.58	0.20	0.77	0.77	0.13	0.00	0.13	0.13	0.13	0.13
Sat Flow, veh/h	1774	4790	394	3442	5158	81	1398	0	3167	1031	553	1106
Grp Volume(v), veh/h	12	1923	1057	833	879	480	125	0	345	23	0	3
Grp Sat Flow(s),veh/h/ln	1774	1695	1793	1721	1695	1848	1398	0	1583	1031	0	1658
Q Serve(g_s), s	1.0	82.9	86.8	29.6	12.3	12.3	12.9	0.0	16.0	3.0	0.0	0.2
Cycle Q Clear(g_c), s	1.0	82.9	86.8	29.6	12.3	12.3	13.1	0.0	16.0	3.0	0.0	0.2
Prop In Lane	1.00		0.22	1.00		0.04	1.00		1.00	1.00		0.67
Lane Grp Cap(c), veh/h	19	1962	1037	679	2595	1415	222	0	399	178	0	209
V/C Ratio(X)	0.64	0.98	1.02	1.23	0.34	0.34	0.56	0.00	0.86	0.13	0.00	0.01
Avail Cap(c_a), veh/h	62	1962	1037	679	2595	1415	325	0	633	254	0	332
HCM Platoon Ratio	1.00	1.00	1.00	1.00	1.00	1.00	1.00	1.00	1.00	1.00	1.00	1.00
Upstream Filter(I)	1.00	1.00	1.00	0.46	0.46	0.46	1.00	0.00	1.00	1.00	0.00	1.00
Uniform Delay (d), s/veh	73.9	30.8	31.6	60.2	5.6	5.6	63.1	0.0	64.3	58.6	0.0	57.4
Incr Delay (d2), s/veh	13.0	16.2	32.7	108.2	0.2	0.3	0.8	0.0	4.4	0.1	0.0	0.0
Initial Q Delay(d3),s/veh	0.0	0.0	0.0	0.0	0.0	0.0	0.0	0.0	0.0	0.0	0.0	0.0
%ile BackOfQ(50%),veh/ln	0.6	42.9	52.1	24.3	5.8	6.4	5.1	0.0	7.2	0.9	0.0	0.1
LnGrp Delay(d),s/veh	87.0	47.0	64.3	168.4	5.7	5.9	64.0	0.0	68.6	58.7	0.0	57.4
LnGrp LOS	F	D	F	F	A	A	E		E	E		E
Approach Vol, veh/h		2992			2192			470			26	
Approach Delay, s/veh		53.2			67.6			67.4			58.6	
Approach LOS		D			E			E			E	

Timer	1	2	3	4	5	6	7	8
Assigned Phs	1	2		4	5	6		8
Phs Duration (G+Y+Rc), s	34.0	92.2		23.8	6.0	120.2		23.8
Change Period (Y+Rc), s	4.4	5.4		4.9	4.4	* 5.4		4.9
Max Green Setting (Gmax), s	29.6	75.7		30.0	5.2	* 1E2		30.0
Max Q Clear Time (g_c+I1), s	31.6	88.8		5.0	3.0	14.3		18.0
Green Ext Time (p_c), s	0.0	0.0		1.0	0.0	83.0		0.9

Intersection Summary	
HCM 2010 Ctrl Delay	60.0
HCM 2010 LOS	E

Notes

User approved volume balancing among the lanes for turning movement.

Movement	EBL	EBT	EBR	WBL	WBT	WBR	NBL	NBT	NBR	SBL	SBT	SBR
Lane Configurations												
Volume (veh/h)	196	1961	833	943	1892	984	554	113	999	459	0	302
Number	5	2	12	1	6	16	3	8	18	7	4	14
Initial Q (Qb), veh	0	0	0	0	0	0	0	0	0	0	0	0
Ped-Bike Adj(A_pbT)	1.00		0.97	1.00		1.00	1.00		0.99	1.00		1.00
Parking Bus, Adj	1.00	1.00	1.00	1.00	1.00	1.00	1.00	1.00	1.00	1.00	1.00	1.00
Adj Sat Flow, veh/h/ln	1863	1863	1863	1863	1863	1863	1863	1863	1863	1863	0	1863
Adj Flow Rate, veh/h	204	2043	868	982	1971	1025	577	118	1041	478	0	315
Adj No. of Lanes	1	4	1	2	3	2	2	1	2	2	0	1
Peak Hour Factor	0.96	0.96	0.96	0.96	0.96	0.96	0.96	0.96	0.96	0.96	0.96	0.96
Percent Heavy Veh, %	2	2	2	2	2	2	2	2	2	2	0	2
Cap, veh/h	218	1991	971	874	2238	1655	1070	229	1046	530	0	0
Arrive On Green	0.12	0.31	0.31	0.25	0.44	0.44	0.31	0.12	0.12	0.15	0.00	0.00
Sat Flow, veh/h	1774	6408	1542	3442	5085	2787	3442	1863	2748	3442	478	
Grp Volume(v), veh/h	204	2043	868	982	1971	1025	577	118	1041	478	71.5	
Grp Sat Flow(s),veh/h/ln	1774	1602	1542	1721	1695	1393	1721	1863	1374	1721	E	
Q Serve(g_s), s	14.8	40.4	40.4	33.0	46.1	30.7	18.0	7.7	16.0	17.7		
Cycle Q Clear(g_c), s	14.8	40.4	40.4	33.0	46.1	30.7	18.0	7.7	16.0	17.7		
Prop In Lane	1.00		1.00	1.00		1.00	1.00		1.00	1.00		
Lane Grp Cap(c), veh/h	218	1991	971	874	2238	1655	1070	229	1046	530		
V/C Ratio(X)	0.93	1.03	0.89	1.12	0.88	0.62	0.54	0.51	1.00	0.90		
Avail Cap(c_a), veh/h	218	1991	971	874	2238	1655	1070	229	1046	556		
HCM Platoon Ratio	1.00	1.00	1.00	1.00	1.00	1.00	1.00	1.00	1.00	1.00		
Upstream Filter(I)	0.09	0.09	0.09	0.09	0.09	0.09	1.00	1.00	1.00	1.00		
Uniform Delay (d), s/veh	56.5	44.8	21.2	48.5	33.3	17.0	37.1	53.4	40.5	54.0		
Incr Delay (d2), s/veh	7.5	14.3	1.1	57.4	0.5	0.2	0.5	2.0	26.7	17.5		
Initial Q Delay(d3),s/veh	0.0	0.0	0.0	0.0	0.0	0.0	0.0	0.0	0.0	0.0		
%ile BackOfQ(50%),veh/ln	7.7	19.8	26.6	22.6	21.6	11.8	8.7	4.1	22.5	9.7		
LnGrp Delay(d),s/veh	64.0	59.1	22.3	105.9	33.8	17.1	37.6	55.3	67.2	71.5		
LnGrp LOS	E	F	C	F	C	B	D	E	E	E		
Approach Vol, veh/h		3115			3978			1736				
Approach Delay, s/veh		49.2			47.3			56.5				
Approach LOS		D			D			E				

Timer	1	2	3	4	5	6	7	8
Assigned Phs	1	2	3		5	6	7	8
Phs Duration (G+Y+Rc), s	37.0	47.4	44.6		20.2	64.2	24.0	20.6
Change Period (Y+Rc), s	4.0	7.0	* 4.2		* 4.2	7.0	4.0	4.6
Max Green Setting (Gmax), s	33.0	40.4	* 22		* 16	57.2	21.0	16.0
Max Q Clear Time (g_c+I1), s	35.0	42.4	20.0		16.8	48.1	19.7	18.0
Green Ext Time (p_c), s	0.0	0.0	0.5		0.0	9.1	0.3	0.0

Intersection Summary	
HCM 2010 Ctrl Delay	50.9
HCM 2010 LOS	D

Notes

* HCM 2010 computational engine requires equal clearance times for the phases crossing the barrier.

Movement	EBL	EBT	WBT	WBR	SBL	SBR
Lane Configurations						
Volume (veh/h)	644	2775	2328	1032	1219	1491
Number	5	2	6	16	7	14
Initial Q (Qb), veh	0	0	0	0	0	0
Ped-Bike Adj(A_pbT)	1.00			1.00	1.00	1.00
Parking Bus, Adj	1.00	1.00	1.00	1.00	1.00	1.00
Adj Sat Flow, veh/h/ln	1863	1863	1863	1863	1863	1863
Adj Flow Rate, veh/h	692	2984	2503	0	1311	1603
Adj No. of Lanes	2	4	4	2	3	2
Peak Hour Factor	0.93	0.93	0.93	0.93	0.93	0.93
Percent Heavy Veh, %	2	2	2	2	2	2
Cap, veh/h	688	3887	2392	1040	1634	910
Arrive On Green	0.20	0.61	0.37	0.00	0.33	0.33
Sat Flow, veh/h	3442	6669	6669	2787	5003	2787
Grp Volume(v), veh/h	692	2984	2503	0	1311	1603
Grp Sat Flow(s),veh/h/ln	1721	1602	1602	1393	1668	1393
Q Serve(g_s), s	30.0	51.4	56.0	0.0	35.9	49.0
Cycle Q Clear(g_c), s	30.0	51.4	56.0	0.0	35.9	49.0
Prop In Lane	1.00			1.00	1.00	1.00
Lane Grp Cap(c), veh/h	688	3887	2392	1040	1634	910
V/C Ratio(X)	1.01	0.77	1.05	0.00	0.80	1.76
Avail Cap(c_a), veh/h	688	3887	2392	1040	1634	910
HCM Platoon Ratio	1.00	1.00	1.00	1.00	1.00	1.00
Upstream Filter(I)	0.14	0.14	1.00	0.00	1.00	1.00
Uniform Delay (d), s/veh	60.0	21.7	47.0	0.0	46.1	50.5
Incr Delay (d2), s/veh	14.0	0.2	31.9	0.0	3.0	346.9
Initial Q Delay(d3),s/veh	0.0	0.0	0.0	0.0	0.0	0.0
%ile BackOfQ(50%),veh/ln	15.6	22.6	30.1	0.0	17.0	75.5
LnGrp Delay(d),s/veh	74.0	21.9	78.9	0.0	49.1	397.4
LnGrp LOS	F	C	F		D	F
Approach Vol, veh/h		3676	2503		2914	
Approach Delay, s/veh		31.7	78.9		240.7	
Approach LOS		C	E		F	

Timer	1	2	3	4	5	6	7	8
Assigned Phs		2		4	5	6		
Phs Duration (G+Y+Rc), s		96.0		54.0	35.0	61.0		
Change Period (Y+Rc), s		5.0		5.0	5.0	5.0		
Max Green Setting (Gmax), s		91.0		49.0	30.0	56.0		
Max Q Clear Time (g_c+I1), s		53.4		51.0	32.0	58.0		
Green Ext Time (p_c), s		37.4		0.0	0.0	0.0		

Intersection Summary	
HCM 2010 Ctrl Delay	111.7
HCM 2010 LOS	F

APPENDIX J

PEAK HOUR INTERSECTION ANALYSIS WORKSHEETS AND ARTERIAL ANALYSIS WORKSHEETS – YEAR 2035 WITH PROJECT

Movement	EBL	EBT	EBR	WBL	WBT	WBR	NBL	NBT	NBR	SBL	SBT	SBR
Lane Configurations												
Volume (veh/h)	106	126	205	73	300	156	514	1333	192	150	1021	150
Number	7	4	14	3	8	18	5	2	12	1	6	16
Initial Q (Qb), veh	0	0	0	0	0	0	0	0	0	0	0	0
Ped-Bike Adj(A_pbT)	1.00		0.96	1.00		0.97	1.00		1.00	1.00		0.99
Parking Bus, Adj	1.00	1.00	1.00	1.00	1.00	1.00	1.00	1.00	1.00	1.00	1.00	1.00
Adj Sat Flow, veh/h/ln	1863	1863	1863	1863	1863	1863	1863	1863	1900	1863	1863	1863
Adj Flow Rate, veh/h	114	135	220	78	323	168	553	1433	206	161	1098	161
Adj No. of Lanes	2	1	1	1	1	1	2	2	0	1	2	1
Peak Hour Factor	0.93	0.93	0.93	0.93	0.93	0.93	0.93	0.93	0.93	0.93	0.93	0.93
Percent Heavy Veh, %	2	2	2	2	2	2	2	2	2	2	2	2
Cap, veh/h	161	366	300	88	371	307	609	1558	221	187	1518	745
Arrive On Green	0.05	0.20	0.20	0.05	0.20	0.20	0.18	0.50	0.50	0.11	0.43	0.43
Sat Flow, veh/h	3442	1863	1526	1774	1863	1541	3442	3112	442	1774	3539	1564
Grp Volume(v), veh/h	114	135	220	78	323	168	553	808	831	161	1098	161
Grp Sat Flow(s),veh/h/ln	1721	1863	1526	1774	1863	1541	1721	1770	1785	1774	1770	1564
Q Serve(g_s), s	4.3	8.3	17.9	5.8	22.2	13.0	20.9	55.6	57.6	11.8	34.0	8.0
Cycle Q Clear(g_c), s	4.3	8.3	17.9	5.8	22.2	13.0	20.9	55.6	57.6	11.8	34.0	8.0
Prop In Lane	1.00		1.00	1.00		1.00	1.00		0.25	1.00		1.00
Lane Grp Cap(c), veh/h	161	366	300	88	371	307	609	886	894	187	1518	745
V/C Ratio(X)	0.71	0.37	0.73	0.88	0.87	0.55	0.91	0.91	0.93	0.86	0.72	0.22
Avail Cap(c_a), veh/h	161	436	357	88	436	361	709	886	894	316	1630	794
HCM Platoon Ratio	1.00	1.00	1.00	1.00	1.00	1.00	1.00	1.00	1.00	1.00	1.00	1.00
Upstream Filter(I)	1.00	1.00	1.00	1.00	1.00	1.00	1.00	1.00	1.00	1.00	1.00	1.00
Uniform Delay (d), s/veh	62.2	46.1	50.0	62.5	51.4	47.7	53.4	30.4	30.9	58.3	31.3	20.3
Incr Delay (d2), s/veh	11.5	0.6	6.3	57.4	13.7	0.6	13.1	13.7	16.0	5.4	1.7	0.2
Initial Q Delay(d3),s/veh	0.0	0.0	0.0	0.0	0.0	0.0	0.0	0.0	0.0	0.0	0.0	0.0
%ile BackOfQ(50%),veh/ln	2.3	4.3	8.1	4.2	12.9	5.6	11.0	30.3	32.4	6.1	17.0	3.5
LnGrp Delay(d),s/veh	73.7	46.7	56.2	120.0	65.1	48.2	66.6	44.0	46.9	63.7	33.0	20.5
LnGrp LOS	E	D	E	F	E	D	E	D	D	E	C	C
Approach Vol, veh/h		469			569			2192			1420	
Approach Delay, s/veh		57.8			67.6			50.8			35.1	
Approach LOS		E			E			D			D	

Timer	1	2	3	4	5	6	7	8
Assigned Phs	1	2	3	4	5	6	7	8
Phs Duration (G+Y+Rc), s	18.3	71.6	11.0	31.5	27.8	62.1	10.6	31.9
Change Period (Y+Rc), s	4.4	5.3	4.4	* 5.5	4.4	* 5.3	4.4	5.5
Max Green Setting (Gmax), s	23.6	64.6	6.6	* 31	27.3	* 61	6.2	31.0
Max Q Clear Time (g_c+I1), s	13.8	59.6	7.8	19.9	22.9	36.0	6.3	24.2
Green Ext Time (p_c), s	0.1	4.9	0.0	2.6	0.6	20.8	0.0	2.0

Intersection Summary	
HCM 2010 Ctrl Delay	48.8
HCM 2010 LOS	D

Notes

* HCM 2010 computational engine requires equal clearance times for the phases crossing the barrier.

Movement	EBL	EBT	EBR	WBL	WBT	WBR	NBL	NBT	NBR	SBL	SBT	SBR
Lane Configurations												
Volume (veh/h)	0	1484	110	517	370	0	0	0	0	455	0	921
Number	5	2	12	1	6	16				7	4	14
Initial Q (Qb), veh	0	0	0	0	0	0				0	0	0
Ped-Bike Adj(A_pbT)	1.00		1.00	1.00		1.00				1.00		1.00
Parking Bus, Adj	1.00	1.00	1.00	1.00	1.00	1.00				1.00	1.00	1.00
Adj Sat Flow, veh/h/ln	0	1863	1863	1863	1863	0				1900	1863	1863
Adj Flow Rate, veh/h	0	1530	113	533	381	0				469	0	0
Adj No. of Lanes	0	2	1	2	2	0				0	1	1
Peak Hour Factor	0.97	0.97	0.97	0.97	0.97	0.97				0.97	0.97	0.97
Percent Heavy Veh, %	0	2	2	2	2	0				2	2	2
Cap, veh/h	0	1645	736	524	2298	0				491	0	438
Arrive On Green	0.00	0.46	0.46	0.15	0.65	0.00				0.28	0.00	0.00
Sat Flow, veh/h	0	3632	1583	3442	3632	0				1774	0	1583
Grp Volume(v), veh/h	0	1530	113	533	381	0				469	0	0
Grp Sat Flow(s),veh/h/ln	0	1770	1583	1721	1770	0				1774	0	1583
Q Serve(g_s), s	0.0	53.0	5.3	19.8	5.5	0.0				33.8	0.0	0.0
Cycle Q Clear(g_c), s	0.0	53.0	5.3	19.8	5.5	0.0				33.8	0.0	0.0
Prop In Lane	0.00		1.00	1.00		0.00				1.00		1.00
Lane Grp Cap(c), veh/h	0	1645	736	524	2298	0				491	0	438
V/C Ratio(X)	0.00	0.93	0.15	1.02	0.17	0.00				0.96	0.00	0.00
Avail Cap(c_a), veh/h	0	1645	736	524	2298	0				497	0	443
HCM Platoon Ratio	1.00	1.00	1.00	1.00	1.00	1.00				1.00	1.00	1.00
Upstream Filter(I)	0.00	1.00	1.00	0.19	0.19	0.00				1.00	0.00	0.00
Uniform Delay (d), s/veh	0.0	32.8	20.1	55.1	9.0	0.0				46.2	0.0	0.0
Incr Delay (d2), s/veh	0.0	10.8	0.4	21.5	0.0	0.0				29.1	0.0	0.0
Initial Q Delay(d3),s/veh	0.0	0.0	0.0	0.0	0.0	0.0				0.0	0.0	0.0
%ile BackOfQ(50%),veh/ln	0.0	28.2	2.4	11.0	2.7	0.0				20.5	0.0	0.0
LnGrp Delay(d),s/veh	0.0	43.6	20.5	76.6	9.0	0.0				75.3	0.0	0.0
LnGrp LOS		D	C	F	A					E		
Approach Vol, veh/h		1643			914						469	
Approach Delay, s/veh		42.1			48.4						75.3	
Approach LOS		D			D						E	

Timer	1	2	3	4	5	6	7	8
Assigned Phs	1	2		4		6		
Phs Duration (G+Y+Rc), s	24.0	65.4		40.6		89.4		
Change Period (Y+Rc), s *	4.2	5.0		4.6		5.0		
Max Green Setting (Gmax), s	20.8	60.0		36.4		84.0		
Max Q Clear Time (g_c+I1), s	21.8	55.0		35.8		7.5		
Green Ext Time (p_c), s	0.0	4.4		0.2		30.1		

Intersection Summary	
HCM 2010 Ctrl Delay	49.1
HCM 2010 LOS	D

Notes

* HCM 2010 computational engine requires equal clearance times for the phases crossing the barrier.

Movement	EBL	EBT	EBR	WBL	WBT	WBR	NBL	NBT	NBR	SBL	SBT	SBR
Lane Configurations												
Volume (veh/h)	1134	805	0	0	674	510	213	6	398	0	0	0
Number	5	2	12	1	6	16	7	4	14			
Initial Q (Qb), veh	0	0	0	0	0	0	0	0	0			
Ped-Bike Adj(A_pbT)	1.00		1.00	1.00		0.98	1.00		1.00			
Parking Bus, Adj	1.00	1.00	1.00	1.00	1.00	1.00	1.00	1.00	1.00			
Adj Sat Flow, veh/h/ln	1863	1863	0	0	1863	1900	1900	1863	1863			
Adj Flow Rate, veh/h	1194	847	0	0	709	537	224	6	419			
Adj No. of Lanes	2	2	0	0	2	0	0	1	1			
Peak Hour Factor	0.95	0.95	0.95	0.95	0.95	0.95	0.95	0.95	0.95			
Percent Heavy Veh, %	2	2	0	0	2	2	2	2	2			
Cap, veh/h	1255	2699	0	0	693	519	265	7	243			
Arrive On Green	0.36	0.76	0.00	0.00	0.36	0.36	0.15	0.15	0.15			
Sat Flow, veh/h	3442	3632	0	0	2004	1431	1730	46	1583			
Grp Volume(v), veh/h	1194	847	0	0	656	590	230	0	419			
Grp Sat Flow(s),veh/h/ln	1721	1770	0	0	1770	1572	1776	0	1583			
Q Serve(g_s), s	40.5	9.0	0.0	0.0	43.5	43.5	15.1	0.0	18.4			
Cycle Q Clear(g_c), s	40.5	9.0	0.0	0.0	43.5	43.5	15.1	0.0	18.4			
Prop In Lane	1.00		0.00	0.00		0.91	0.97		1.00			
Lane Grp Cap(c), veh/h	1255	2699	0	0	642	571	272	0	243			
V/C Ratio(X)	0.95	0.31	0.00	0.00	1.02	1.03	0.84	0.00	1.73			
Avail Cap(c_a), veh/h	1285	2699	0	0	642	571	272	0	243			
HCM Platoon Ratio	1.00	1.00	1.00	1.00	1.00	1.00	1.00	1.00	1.00			
Upstream Filter(I)	0.24	0.24	0.00	0.00	0.77	0.77	1.00	0.00	1.00			
Uniform Delay (d), s/veh	37.1	4.4	0.0	0.0	38.2	38.2	49.4	0.0	50.8			
Incr Delay (d2), s/veh	4.8	0.1	0.0	0.0	36.7	42.2	20.9	0.0	343.4			
Initial Q Delay(d3),s/veh	0.0	0.0	0.0	0.0	0.0	0.0	0.0	0.0	0.0			
%ile BackOfQ(50%),veh/ln	20.1	4.4	0.0	0.0	27.8	25.5	9.0	0.0	38.0			
LnGrp Delay(d),s/veh	41.9	4.5	0.0	0.0	75.0	80.4	70.3	0.0	394.2			
LnGrp LOS	D	A			F	F	E		F			
Approach Vol, veh/h		2041			1246			649				
Approach Delay, s/veh		26.4			77.6			279.4				
Approach LOS		C			E			F				

Timer	1	2	3	4	5	6	7	8
Assigned Phs		2		4	5	6		
Phs Duration (G+Y+Rc), s		97.0		23.0	48.0	49.0		
Change Period (Y+Rc), s		5.5		4.6	* 4.2	5.5		
Max Green Setting (Gmax), s		91.5		18.4	* 45	42.5		
Max Q Clear Time (g_c+I1), s		11.0		20.4	42.5	45.5		
Green Ext Time (p_c), s		31.4		0.0	1.3	0.0		

Intersection Summary	
HCM 2010 Ctrl Delay	84.3
HCM 2010 LOS	F

Notes

* HCM 2010 computational engine requires equal clearance times for the phases crossing the barrier.

Movement	EBL	EBT	EBR	WBL	WBT	WBR	NBL	NBT	NBR	SBL	SBT	SBR
Lane Configurations												
Volume (veh/h)	384	62	511	16	25	12	513	251	34	19	180	600
Number	5	2	12	1	6	16	3	8	18	7	4	14
Initial Q (Qb), veh	0	0	0	0	0	0	0	0	0	0	0	0
Ped-Bike Adj(A_pbT)	1.00		1.00	1.00		1.00	1.00		1.00	1.00		1.00
Parking Bus, Adj	1.00	1.00	1.00	1.00	1.00	1.00	1.00	1.00	1.00	1.00	1.00	1.00
Adj Sat Flow, veh/h/ln	1863	1863	1863	1863	1863	1900	1863	1863	1900	1900	1863	1863
Adj Flow Rate, veh/h	413	67	549	17	27	13	568	247	37	20	517	430
Adj No. of Lanes	2	1	1	1	2	0	2	1	0	0	1	1
Peak Hour Factor	0.93	0.93	0.93	0.93	0.93	0.93	0.93	0.93	0.93	0.93	0.93	0.93
Percent Heavy Veh, %	2	2	2	2	2	2	2	2	2	2	2	2
Cap, veh/h	984	533	768	98	131	59	707	316	47	19	478	423
Arrive On Green	0.29	0.29	0.29	0.06	0.06	0.06	0.20	0.20	0.20	0.27	0.27	0.27
Sat Flow, veh/h	3442	1863	1583	1774	2378	1066	3548	1584	237	69	1790	1583
Grp Volume(v), veh/h	413	67	549	17	20	20	568	0	284	537	0	430
Grp Sat Flow(s),veh/h/ln	1721	1863	1583	1774	1770	1675	1774	0	1821	1859	0	1583
Q Serve(g_s), s	9.9	2.7	27.8	0.9	1.1	1.2	15.5	0.0	15.1	27.2	0.0	27.2
Cycle Q Clear(g_c), s	9.9	2.7	27.8	0.9	1.1	1.2	15.5	0.0	15.1	27.2	0.0	27.2
Prop In Lane	1.00		1.00	1.00		0.64	1.00		0.13	0.04		1.00
Lane Grp Cap(c), veh/h	984	533	768	98	97	92	707	0	363	497	0	423
V/C Ratio(X)	0.42	0.13	0.71	0.17	0.20	0.22	0.80	0.00	0.78	1.08	0.00	1.02
Avail Cap(c_a), veh/h	984	533	768	298	297	281	941	0	483	497	0	423
HCM Platoon Ratio	1.00	1.00	1.00	1.00	1.00	1.00	1.00	1.00	1.00	1.00	1.00	1.00
Upstream Filter(I)	1.00	1.00	1.00	1.00	1.00	1.00	1.00	0.00	1.00	1.00	0.00	1.00
Uniform Delay (d), s/veh	29.5	26.9	20.6	45.9	46.0	46.0	38.8	0.0	38.7	37.3	0.0	37.3
Incr Delay (d2), s/veh	0.6	0.2	3.8	0.8	1.0	1.2	3.8	0.0	6.0	63.9	0.0	47.9
Initial Q Delay(d3),s/veh	0.0	0.0	0.0	0.0	0.0	0.0	0.0	0.0	0.0	0.0	0.0	0.0
%ile BackOfQ(50%),veh/ln	4.8	1.4	16.1	0.5	0.6	0.6	7.9	0.0	8.2	22.6	0.0	17.4
LnGrp Delay(d),s/veh	30.0	27.1	24.5	46.7	47.0	47.2	42.6	0.0	44.6	101.2	0.0	85.2
LnGrp LOS	C	C	C	D	D	D	D		D	F		F
Approach Vol, veh/h		1029			57			852			967	
Approach Delay, s/veh		26.9			47.0			43.3			94.1	
Approach LOS		C			D			D			F	

Timer	1	2	3	4	5	6	7	8
Assigned Phs		2		4		6		8
Phs Duration (G+Y+Rc), s		34.0		32.1		10.5		25.2
Change Period (Y+Rc), s		4.9		4.9		4.9		4.9
Max Green Setting (Gmax), s		29.1		27.2		17.1		27.0
Max Q Clear Time (g_c+I1), s		29.8		29.2		3.2		17.5
Green Ext Time (p_c), s		0.0		0.0		0.1		2.8

Intersection Summary	
HCM 2010 Ctrl Delay	54.5
HCM 2010 LOS	D

Notes

User approved volume balancing among the lanes for turning movement.

Movement	EBL	EBT	EBR	WBL	WBT	WBR	NBL	NBT	NBR	SBL	SBT	SBR
Lane Configurations												
Volume (veh/h)	22	9	27	137	7	28	17	727	37	9	498	42
Number	7	4	14	3	8	18	5	2	12	1	6	16
Initial Q (Qb), veh	0	0	0	0	0	0	0	0	0	0	0	0
Ped-Bike Adj(A_pbT)	1.00		1.00	1.00		1.00	1.00		1.00	1.00		1.00
Parking Bus, Adj	1.00	1.00	1.00	1.00	1.00	1.00	1.00	1.00	1.00	1.00	1.00	1.00
Adj Sat Flow, veh/h/ln	1900	1863	1900	1900	1863	1900	1863	1863	1900	1863	1863	1900
Adj Flow Rate, veh/h	24	10	30	151	8	31	19	799	41	10	547	46
Adj No. of Lanes	0	1	0	0	1	0	1	1	0	1	1	0
Peak Hour Factor	0.91	0.91	0.91	0.91	0.91	0.91	0.91	0.91	0.91	0.91	0.91	0.91
Percent Heavy Veh, %	2	2	2	2	2	2	2	2	2	2	2	2
Cap, veh/h	124	61	119	244	10	37	29	1209	62	17	1155	97
Arrive On Green	0.15	0.15	0.15	0.15	0.15	0.15	0.02	0.69	0.69	0.01	0.68	0.68
Sat Flow, veh/h	491	400	787	1186	63	244	1774	1757	90	1774	1695	143
Grp Volume(v), veh/h	64	0	0	190	0	0	19	0	840	10	0	593
Grp Sat Flow(s),veh/h/ln	1678	0	0	1493	0	0	1774	0	1847	1774	0	1838
Q Serve(g_s), s	0.0	0.0	0.0	8.9	0.0	0.0	1.1	0.0	26.0	0.6	0.0	15.2
Cycle Q Clear(g_c), s	3.3	0.0	0.0	12.2	0.0	0.0	1.1	0.0	26.0	0.6	0.0	15.2
Prop In Lane	0.37		0.47	0.79		0.16	1.00		0.05	1.00		0.08
Lane Grp Cap(c), veh/h	303	0	0	290	0	0	29	0	1271	17	0	1252
V/C Ratio(X)	0.21	0.00	0.00	0.65	0.00	0.00	0.65	0.00	0.66	0.58	0.00	0.47
Avail Cap(c_a), veh/h	608	0	0	572	0	0	73	0	1271	73	0	1252
HCM Platoon Ratio	1.00	1.00	1.00	1.00	1.00	1.00	1.00	1.00	1.00	1.00	1.00	1.00
Upstream Filter(I)	1.00	0.00	0.00	1.00	0.00	0.00	1.00	0.00	1.00	1.00	0.00	1.00
Uniform Delay (d), s/veh	37.4	0.0	0.0	40.9	0.0	0.0	48.9	0.0	8.9	49.3	0.0	7.5
Incr Delay (d2), s/veh	0.1	0.0	0.0	0.9	0.0	0.0	8.8	0.0	2.7	11.0	0.0	1.3
Initial Q Delay(d3),s/veh	0.0	0.0	0.0	0.0	0.0	0.0	0.0	0.0	0.0	0.0	0.0	0.0
%ile BackOfQ(50%),veh/ln	1.6	0.0	0.0	5.1	0.0	0.0	0.6	0.0	14.0	0.3	0.0	8.0
LnGrp Delay(d),s/veh	37.5	0.0	0.0	41.8	0.0	0.0	57.7	0.0	11.6	60.3	0.0	8.8
LnGrp LOS	D			D			E		B	E		A
Approach Vol, veh/h		64			190			859			603	
Approach Delay, s/veh		37.5			41.8			12.7			9.6	
Approach LOS		D			D			B			A	

Timer	1	2	3	4	5	6	7	8
Assigned Phs	1	2		4	5	6		8
Phs Duration (G+Y+Rc), s	5.4	74.6		20.0	6.0	73.9		20.0
Change Period (Y+Rc), s	4.4	* 5.8		4.9	4.4	5.8		4.9
Max Green Setting (Gmax), s	4.1	* 46		35.1	4.1	45.7		35.1
Max Q Clear Time (g_c+I1), s	2.6	28.0		5.3	3.1	17.2		14.2
Green Ext Time (p_c), s	0.0	12.0		1.0	0.0	16.3		0.9

Intersection Summary	
HCM 2010 Ctrl Delay	15.8
HCM 2010 LOS	B

Notes

* HCM 2010 computational engine requires equal clearance times for the phases crossing the barrier.

Movement	WBL	WBR	NBT	NBR	SBL	SBT
Lane Configurations						
Volume (veh/h)	670	4	733	893	0	466
Number	3	18	2	12	1	6
Initial Q (Qb), veh	0	0	0	0	0	0
Ped-Bike Adj(A_pbT)	1.00	1.00		1.00	1.00	
Parking Bus, Adj	1.00	1.00	1.00	1.00	1.00	1.00
Adj Sat Flow, veh/h/ln	1863	1900	1863	1900	0	1863
Adj Flow Rate, veh/h	732	0	797	971	0	507
Adj No. of Lanes	2	1	2	0	0	2
Peak Hour Factor	0.92	0.92	0.92	0.92	0.92	0.92
Percent Heavy Veh, %	2	0	2	2	0	2
Cap, veh/h	834	380	1084	970	0	2168
Arrive On Green	0.23	0.00	0.61	0.61	0.00	0.61
Sat Flow, veh/h	3548	1615	1863	1583	0	3725
Grp Volume(v), veh/h	732	0	797	971	0	507
Grp Sat Flow(s),veh/h/ln	1774	1615	1770	1583	0	1770
Q Serve(g_s), s	14.0	0.0	22.3	43.0	0.0	4.5
Cycle Q Clear(g_c), s	14.0	0.0	22.3	43.0	0.0	4.5
Prop In Lane	1.00	1.00		1.00	0.00	
Lane Grp Cap(c), veh/h	834	380	1084	970	0	2168
V/C Ratio(X)	0.88	0.00	0.74	1.00	0.00	0.23
Avail Cap(c_a), veh/h	885	403	1084	970	0	2168
HCM Platoon Ratio	1.00	1.00	1.00	1.00	1.00	1.00
Upstream Filter(I)	1.00	0.00	1.00	1.00	0.00	1.00
Uniform Delay (d), s/veh	25.9	0.0	9.6	13.6	0.0	6.1
Incr Delay (d2), s/veh	9.6	0.0	4.4	29.2	0.0	0.3
Initial Q Delay(d3),s/veh	0.0	0.0	0.0	0.0	0.0	0.0
%ile BackOfQ(50%),veh/ln	7.9	0.0	12.0	26.2	0.0	2.3
LnGrp Delay(d),s/veh	35.5	0.0	14.0	42.8	0.0	6.4
LnGrp LOS	D		B	F		A
Approach Vol, veh/h	732		1768			507
Approach Delay, s/veh	35.5		29.8			6.4
Approach LOS	D		C			A

Timer	1	2	3	4	5	6	7	8
Assigned Phs		2				6		8
Phs Duration (G+Y+Rc), s		48.8				48.8		21.4
Change Period (Y+Rc), s		* 5.8				5.8		4.9
Max Green Setting (Gmax), s		* 43				13.8		17.5
Max Q Clear Time (g_c+I1), s		45.0				6.5		16.0
Green Ext Time (p_c), s		0.0				6.6		0.5

Intersection Summary	
HCM 2010 Ctrl Delay	27.3
HCM 2010 LOS	C

Notes

User approved volume balancing among the lanes for turning movement.

Movement	EBL	EBT	EBR	WBL	WBT	WBR	NBL	NBT	NBR	SBL	SBT	SBR
Lane Configurations												
Volume (veh/h)	28	13	49	5	16	705	152	821	13	644	424	52
Number	7	4	14	3	8	18	5	2	12	1	6	16
Initial Q (Qb), veh	0	0	0	0	0	0	0	0	0	0	0	0
Ped-Bike Adj(A_pbT)	1.00		1.00	1.00		1.00	1.00		1.00	1.00		1.00
Parking Bus, Adj	1.00	1.00	1.00	1.00	1.00	1.00	1.00	1.00	1.00	1.00	1.00	1.00
Adj Sat Flow, veh/h/ln	1863	1863	1900	1900	1863	1863	1863	1863	1900	1863	1863	1900
Adj Flow Rate, veh/h	30	14	53	0	0	783	165	892	14	700	461	57
Adj No. of Lanes	1	1	0	0	1	2	1	3	0	2	2	0
Peak Hour Factor	0.92	0.92	0.92	0.92	0.92	0.92	0.92	0.92	0.92	0.92	0.92	0.92
Percent Heavy Veh, %	2	2	2	2	2	2	2	2	2	2	2	2
Cap, veh/h	247	78	295	0	425	1436	201	1878	29	775	1510	186
Arrive On Green	0.23	0.23	0.23	0.00	0.00	0.23	0.11	0.36	0.36	0.23	0.48	0.48
Sat Flow, veh/h	688	342	1293	0	1863	3167	1774	5158	81	3442	3173	391
Grp Volume(v), veh/h	30	0	67	0	0	783	165	586	320	700	256	262
Grp Sat Flow(s),veh/h/ln	688	0	1635	0	1863	1583	1774	1695	1848	1721	1770	1794
Q Serve(g_s), s	2.8	0.0	2.6	0.0	0.0	14.4	7.3	10.6	10.6	15.8	7.1	7.2
Cycle Q Clear(g_c), s	2.8	0.0	2.6	0.0	0.0	14.4	7.3	10.6	10.6	15.8	7.1	7.2
Prop In Lane	1.00		0.79	0.00		1.00	1.00		0.04	1.00		0.22
Lane Grp Cap(c), veh/h	247	0	373	0	425	1436	201	1234	673	775	842	854
V/C Ratio(X)	0.12	0.00	0.18	0.00	0.00	0.55	0.82	0.47	0.48	0.90	0.30	0.31
Avail Cap(c_a), veh/h	314	0	531	0	605	1742	213	1234	673	800	842	854
HCM Platoon Ratio	1.00	1.00	1.00	1.00	1.00	1.00	1.00	1.00	1.00	1.00	1.00	1.00
Upstream Filter(I)	1.00	0.00	1.00	0.00	0.00	0.52	1.00	1.00	1.00	1.00	1.00	1.00
Uniform Delay (d), s/veh	24.9	0.0	24.8	0.0	0.0	15.9	34.7	19.6	19.6	30.2	12.8	12.9
Incr Delay (d2), s/veh	0.1	0.0	0.1	0.0	0.0	0.1	19.6	1.3	2.4	12.9	0.9	0.9
Initial Q Delay(d3),s/veh	0.0	0.0	0.0	0.0	0.0	0.0	0.0	0.0	0.0	0.0	0.0	0.0
%ile BackOfQ(50%),veh/ln	0.5	0.0	1.2	0.0	0.0	6.3	4.7	5.2	5.9	8.9	3.6	3.8
LnGrp Delay(d),s/veh	25.0	0.0	24.9	0.0	0.0	15.9	54.3	20.9	22.0	43.1	13.8	13.8
LnGrp LOS	C		C			B	D	C	C	D	B	B
Approach Vol, veh/h		97			783			1071			1218	
Approach Delay, s/veh		24.9			15.9			26.3			30.6	
Approach LOS		C			B			C			C	

Timer	1	2	3	4	5	6	7	8
Assigned Phs	1	2		4	5	6		8
Phs Duration (G+Y+Rc), s	22.4	34.4		23.2	13.4	43.4		23.2
Change Period (Y+Rc), s	4.4	* 5.3		4.9	4.4	5.3		4.9
Max Green Setting (Gmax), s	18.6	* 21		26.0	9.6	29.8		26.0
Max Q Clear Time (g_c+I1), s	17.8	12.6		4.8	9.3	9.2		16.4
Green Ext Time (p_c), s	0.2	5.5		2.4	0.0	10.1		1.9

Intersection Summary	
HCM 2010 Ctrl Delay	25.4
HCM 2010 LOS	C

Notes

User approved volume balancing among the lanes for turning movement.

Movement	WBL	WBR	NBT	NBR	SBL	SBT
Lane Configurations						
Volume (veh/h)	940	10	1024	1147	0	461
Number	3	18	2	12	1	6
Initial Q (Qb), veh	0	0	0	0	0	0
Ped-Bike Adj(A_pbT)	1.00	1.00		1.00	1.00	
Parking Bus, Adj	1.00	1.00	1.00	1.00	1.00	1.00
Adj Sat Flow, veh/h/ln	1863	1900	1863	1863	0	1863
Adj Flow Rate, veh/h	1066	0	1151	0	0	518
Adj No. of Lanes	2	1	2	1	0	2
Peak Hour Factor	0.89	0.89	0.89	0.89	0.89	0.89
Percent Heavy Veh, %	2	0	2	2	0	2
Cap, veh/h	1202	547	1503	672	0	1503
Arrive On Green	0.34	0.00	0.42	0.00	0.00	0.42
Sat Flow, veh/h	3548	1615	3632	1583	0	3725
Grp Volume(v), veh/h	1066	0	1151	0	0	518
Grp Sat Flow(s),veh/h/ln	1774	1615	1770	1583	0	1770
Q Serve(g_s), s	17.0	0.0	16.6	0.0	0.0	5.9
Cycle Q Clear(g_c), s	17.0	0.0	16.6	0.0	0.0	5.9
Prop In Lane	1.00	1.00		1.00	0.00	
Lane Grp Cap(c), veh/h	1202	547	1503	672	0	1503
V/C Ratio(X)	0.89	0.00	0.77	0.00	0.00	0.34
Avail Cap(c_a), veh/h	1260	573	1503	672	0	1503
HCM Platoon Ratio	1.00	1.00	1.00	1.00	1.00	1.00
Upstream Filter(I)	1.00	0.00	1.00	0.00	0.00	1.00
Uniform Delay (d), s/veh	18.7	0.0	14.7	0.0	0.0	11.6
Incr Delay (d2), s/veh	7.9	0.0	3.8	0.0	0.0	0.6
Initial Q Delay(d3),s/veh	0.0	0.0	0.0	0.0	0.0	0.0
%ile BackOfQ(50%),veh/ln	9.6	0.0	8.8	0.0	0.0	3.0
LnGrp Delay(d),s/veh	26.6	0.0	18.5	0.0	0.0	12.3
LnGrp LOS	C		B			B
Approach Vol, veh/h	1066		1151			518
Approach Delay, s/veh	26.6		18.5			12.3
Approach LOS	C		B			B

Timer	1	2	3	4	5	6	7	8
Assigned Phs		2				6		8
Phs Duration (G+Y+Rc), s		31.0				31.0		29.0
Change Period (Y+Rc), s		5.5				* 5.5		8.7
Max Green Setting (Gmax), s		24.5				* 25		21.3
Max Q Clear Time (g_c+I1), s		18.6				7.9		19.0
Green Ext Time (p_c), s		5.1				12.8		1.3

Intersection Summary	
HCM 2010 Ctrl Delay	20.5
HCM 2010 LOS	C

Notes

User approved volume balancing among the lanes for turning movement.

Movement	EBL	EBT	EBR	WBL	WBT	WBR	NBL	NBT	NBR	SBL	SBT	SBR
Lane Configurations												
Volume (veh/h)	467	163	33	308	316	185	34	932	185	71	589	323
Number	7	4	14	3	8	18	5	2	12	1	6	16
Initial Q (Qb), veh	0	0	0	0	0	0	0	0	0	0	0	0
Ped-Bike Adj(A_pbT)	1.00		1.00	1.00		1.00	1.00		1.00	1.00		1.00
Parking Bus, Adj	1.00	1.00	1.00	1.00	1.00	1.00	1.00	1.00	1.00	1.00	1.00	1.00
Adj Sat Flow, veh/h/ln	1863	1863	1900	1863	1863	1863	1863	1863	1900	1863	1863	1900
Adj Flow Rate, veh/h	394	420	39	416	307	220	40	1110	220	85	701	385
Adj No. of Lanes	1	1	0	2	1	1	1	2	0	1	2	0
Peak Hour Factor	0.84	0.84	0.84	0.84	0.84	0.84	0.84	0.84	0.84	0.84	0.84	0.84
Percent Heavy Veh, %	2	2	2	2	2	2	2	2	2	2	2	2
Cap, veh/h	415	393	37	656	344	293	51	1057	208	105	858	471
Arrive On Green	0.23	0.23	0.23	0.18	0.18	0.18	0.03	0.36	0.36	0.06	0.39	0.39
Sat Flow, veh/h	1774	1679	156	3548	1863	1583	1774	2948	582	1774	2208	1211
Grp Volume(v), veh/h	394	0	459	416	307	220	40	664	666	85	562	524
Grp Sat Flow(s),veh/h/ln	1774	0	1835	1774	1863	1583	1774	1770	1760	1774	1770	1649
Q Serve(g_s), s	26.2	0.0	28.1	13.0	19.3	15.8	2.7	43.0	43.0	5.7	34.1	34.2
Cycle Q Clear(g_c), s	26.2	0.0	28.1	13.0	19.3	15.8	2.7	43.0	43.0	5.7	34.1	34.2
Prop In Lane	1.00		0.08	1.00		1.00	1.00		0.33	1.00		0.73
Lane Grp Cap(c), veh/h	415	0	430	656	344	293	51	634	631	105	688	641
V/C Ratio(X)	0.95	0.00	1.07	0.63	0.89	0.75	0.78	1.05	1.06	0.81	0.82	0.82
Avail Cap(c_a), veh/h	415	0	430	713	374	318	74	634	631	105	688	641
HCM Platoon Ratio	1.00	1.00	1.00	1.00	1.00	1.00	1.00	1.00	1.00	1.00	1.00	1.00
Upstream Filter(I)	0.56	0.00	0.56	1.00	1.00	1.00	1.00	1.00	1.00	1.00	1.00	1.00
Uniform Delay (d), s/veh	45.2	0.0	46.0	45.2	47.7	46.3	57.9	38.5	38.5	55.8	32.8	32.9
Incr Delay (d2), s/veh	21.3	0.0	52.2	1.1	20.3	7.5	17.0	48.8	51.3	34.0	10.3	11.1
Initial Q Delay(d3),s/veh	0.0	0.0	0.0	0.0	0.0	0.0	0.0	0.0	0.0	0.0	0.0	0.0
%ile BackOfQ(50%),veh/ln	15.3	0.0	20.4	6.5	11.9	7.5	1.6	29.6	29.8	3.8	18.7	17.6
LnGrp Delay(d),s/veh	66.6	0.0	98.1	46.3	68.0	53.8	74.9	87.2	89.8	89.8	43.2	44.0
LnGrp LOS	E		F	D	E	D	E	F	F	F	D	D
Approach Vol, veh/h		853			943			1370			1171	
Approach Delay, s/veh		83.6			55.1			88.1			46.9	
Approach LOS		F			E			F			D	

Timer	1	2	3	4	5	6	7	8
Assigned Phs	1	2		4	5	6		8
Phs Duration (G+Y+Rc), s	11.5	48.4		33.0	7.9	52.1		27.1
Change Period (Y+Rc), s	4.4	* 5.4		4.9	4.4	5.4		4.9
Max Green Setting (Gmax), s	7.1	* 42		28.1	5.0	43.2		24.1
Max Q Clear Time (g_c+I1), s	17.3	45.0		30.1	4.7	36.2		21.3
Green Ext Time (p_c), s	0.0	0.0		0.0	0.0	5.5		0.9

Intersection Summary	
HCM 2010 Ctrl Delay	68.9
HCM 2010 LOS	E

Notes

User approved volume balancing among the lanes for turning movement.

Movement	EBL	EBT	EBR	WBL	WBT	WBR	NBL	NBT	NBR	SBL	SBT	SBR
Lane Configurations												
Volume (veh/h)	665	641	36	5	713	114	114	30	4	20	0	87
Number	5	2	12	1	6	16	3	8	18	7	4	14
Initial Q (Qb), veh	0	0	0	0	0	0	0	0	0	0	0	0
Ped-Bike Adj(A_pbT)	1.00		1.00	1.00		1.00	1.00		1.00	1.00		1.00
Parking Bus, Adj	1.00	1.00	1.00	1.00	1.00	1.00	1.00	1.00	1.00	1.00	1.00	1.00
Adj Sat Flow, veh/h/ln	1863	1863	1900	1863	1863	1900	1900	1863	1900	1900	1863	1863
Adj Flow Rate, veh/h	792	763	43	6	849	136	136	36	5	24	0	104
Adj No. of Lanes	1	2	0	1	2	0	0	1	0	0	1	1
Peak Hour Factor	0.84	0.84	0.84	0.84	0.84	0.84	0.84	0.84	0.84	0.84	0.84	0.84
Percent Heavy Veh, %	2	2	2	2	2	2	2	2	2	2	2	2
Cap, veh/h	764	2513	142	10	956	153	194	40	6	272	0	931
Arrive On Green	0.43	0.74	0.74	0.01	0.31	0.31	0.16	0.16	0.16	0.16	0.00	0.16
Sat Flow, veh/h	1774	3407	192	1774	3056	490	963	255	35	1424	0	1583
Grp Volume(v), veh/h	792	396	410	6	492	493	177	0	0	24	0	104
Grp Sat Flow(s),veh/h/ln	1774	1770	1829	1774	1770	1776	1253	0	0	1424	0	1583
Q Serve(g_s), s	64.6	11.4	11.4	0.5	39.6	39.6	18.9	0.0	0.0	0.0	0.0	4.3
Cycle Q Clear(g_c), s	64.6	11.4	11.4	0.5	39.6	39.6	21.1	0.0	0.0	2.2	0.0	4.3
Prop In Lane	1.00		0.10	1.00		0.28	0.77		0.03	1.00		1.00
Lane Grp Cap(c), veh/h	764	1305	1349	10	554	556	239	0	0	272	0	931
V/C Ratio(X)	1.04	0.30	0.30	0.57	0.89	0.89	0.74	0.00	0.00	0.09	0.00	0.11
Avail Cap(c_a), veh/h	764	1305	1349	47	554	556	289	0	0	321	0	988
HCM Platoon Ratio	1.00	1.00	1.00	1.00	1.00	1.00	1.00	1.00	1.00	1.00	1.00	1.00
Upstream Filter(I)	1.00	1.00	1.00	1.00	1.00	1.00	1.00	0.00	0.00	1.00	0.00	1.00
Uniform Delay (d), s/veh	42.7	6.7	6.7	74.4	49.0	49.0	63.2	0.0	0.0	54.2	0.0	13.6
Incr Delay (d2), s/veh	42.4	0.6	0.6	17.0	18.8	18.7	5.8	0.0	0.0	0.1	0.0	0.0
Initial Q Delay(d3),s/veh	0.0	0.0	0.0	0.0	0.0	0.0	0.0	0.0	0.0	0.0	0.0	0.0
%ile BackOfQ(50%),veh/ln	40.6	5.7	5.9	0.3	22.3	22.4	7.6	0.0	0.0	0.9	0.0	1.9
LnGrp Delay(d),s/veh	85.1	7.3	7.2	91.4	67.8	67.8	69.0	0.0	0.0	54.2	0.0	13.7
LnGrp LOS	F	A	A	F	E	E	E			D		B
Approach Vol, veh/h		1598			991			177			128	
Approach Delay, s/veh		45.8			68.0			69.0			21.3	
Approach LOS		D			E			E			C	

Timer	1	2	3	4	5	6	7	8
Assigned Phs	1	2		4	5	6		8
Phs Duration (G+Y+Rc), s	5.3	116.2		28.5	69.0	52.5		28.5
Change Period (Y+Rc), s	4.4	* 5.6		4.9	4.4	5.6		4.9
Max Green Setting (Gmax), s	4.0	* 1E2		29.0	64.6	41.5		29.0
Max Q Clear Time (g_c+I1), s	2.5	13.4		6.3	66.6	41.6		23.1
Green Ext Time (p_c), s	0.0	60.8		0.9	0.0	0.0		0.5

Intersection Summary	
HCM 2010 Ctrl Delay	53.7
HCM 2010 LOS	D

Notes

* HCM 2010 computational engine requires equal clearance times for the phases crossing the barrier.

Intersection	
Int Delay, s/veh	7.1

Movement	EBT	EBR	WBL	WBT	NBL	NBR
Vol, veh/h	678	21	40	739	73	88
Conflicting Peds, #/hr	0	18	0	0	0	0
Sign Control	Free	Free	Free	Free	Stop	Stop
RT Channelized	-	None	-	None	-	None
Storage Length	-	-	100	-	0	-
Veh in Median Storage, #	0	-	-	0	0	-
Grade, %	0	-	-	0	0	-
Peak Hour Factor	84	84	84	84	84	84
Heavy Vehicles, %	2	2	2	2	2	2
Mvmt Flow	807	25	48	880	87	105

Major/Minor	Major1		Major2		Minor1	
Conflicting Flow All	0	0	832	0	1355	416
Stage 1	-	-	-	-	820	-
Stage 2	-	-	-	-	535	-
Critical Hdwy	-	-	4.14	-	6.84	6.94
Critical Hdwy Stg 1	-	-	-	-	5.84	-
Critical Hdwy Stg 2	-	-	-	-	5.84	-
Follow-up Hdwy	-	-	2.22	-	3.52	3.32
Pot Cap-1 Maneuver	-	-	796	-	141	585
Stage 1	-	-	-	-	393	-
Stage 2	-	-	-	-	551	-
Platoon blocked, %	-	-		-		
Mov Cap-1 Maneuver	-	-	796	-	131	585
Mov Cap-2 Maneuver	-	-	-	-	131	-
Stage 1	-	-	-	-	393	-
Stage 2	-	-	-	-	510	-

Approach	EB	WB	NB
HCM Control Delay, s	0	0.5	70.1
HCM LOS			F

Minor Lane/Major Mvmt	NBLn1	EBT	EBR	WBL	WBT
Capacity (veh/h)	228	-	-	796	-
HCM Lane V/C Ratio	0.841	-	-	0.06	-
HCM Control Delay (s)	70.1	-	-	9.8	-
HCM Lane LOS	F	-	-	A	-
HCM 95th %tile Q(veh)	6.5	-	-	0.2	-

Movement	EBL	EBT	EBR	WBL	WBT	WBR	NBL	NBT	NBR	SBL	SBT	SBR
Lane Configurations												
Volume (veh/h)	351	630	16	4	903	400	53	6	27	38	2	52
Number	5	2	12	1	6	16	3	8	18	7	4	14
Initial Q (Qb), veh	0	0	0	0	0	0	0	0	0	0	0	0
Ped-Bike Adj(A_pbT)	1.00		0.97	1.00		0.98	1.00		0.98	1.00		0.88
Parking Bus, Adj	1.00	1.00	1.00	1.00	1.00	1.00	1.00	1.00	1.00	1.00	1.00	1.00
Adj Sat Flow, veh/h/ln	1863	1863	1900	1863	1863	1863	1863	1863	1900	1863	1863	1863
Adj Flow Rate, veh/h	413	741	19	5	1062	471	62	7	32	46	0	61
Adj No. of Lanes	1	2	0	1	2	1	1	1	0	2	0	1
Peak Hour Factor	0.85	0.85	0.85	0.85	0.85	0.85	0.85	0.85	0.85	0.85	0.85	0.85
Percent Heavy Veh, %	2	2	2	2	2	2	2	2	2	2	2	2
Cap, veh/h	381	2220	57	329	1329	883	81	13	60	668	0	262
Arrive On Green	0.21	0.63	0.63	0.25	0.25	0.25	0.05	0.05	0.05	0.19	0.00	0.19
Sat Flow, veh/h	1774	3523	90	702	3539	1557	1774	287	1310	3548	0	1394
Grp Volume(v), veh/h	413	372	388	5	1062	471	62	0	39	46	0	61
Grp Sat Flow(s),veh/h/ln	1774	1770	1844	702	1770	1557	1774	0	1597	1774	0	1394
Q Serve(g_s), s	23.6	10.8	10.8	0.6	30.9	21.8	3.8	0.0	2.6	1.2	0.0	4.1
Cycle Q Clear(g_c), s	23.6	10.8	10.8	0.6	30.9	21.8	3.8	0.0	2.6	1.2	0.0	4.1
Prop In Lane	1.00		0.05	1.00		1.00	1.00		0.82	1.00		1.00
Lane Grp Cap(c), veh/h	381	1115	1162	329	1329	883	81	0	73	668	0	262
V/C Ratio(X)	1.09	0.33	0.33	0.02	0.80	0.53	0.77	0.00	0.54	0.07	0.00	0.23
Avail Cap(c_a), veh/h	381	1115	1162	329	1329	883	81	0	73	871	0	342
HCM Platoon Ratio	1.00	1.00	1.00	0.67	0.67	0.67	1.00	1.00	1.00	1.00	1.00	1.00
Upstream Filter(I)	1.00	1.00	1.00	1.00	1.00	1.00	1.00	0.00	1.00	1.00	0.00	1.00
Uniform Delay (d), s/veh	43.2	9.5	9.5	25.9	37.3	18.3	51.9	0.0	51.4	36.7	0.0	37.9
Incr Delay (d2), s/veh	70.9	0.8	0.8	0.0	3.6	0.7	35.3	0.0	7.6	0.0	0.0	0.2
Initial Q Delay(d3),s/veh	0.0	0.0	0.0	0.0	0.0	0.0	0.0	0.0	0.0	0.0	0.0	0.0
%ile BackOfQ(50%),veh/ln	19.0	5.5	5.7	0.1	15.8	13.6	2.7	0.0	1.3	0.6	0.0	1.6
LnGrp Delay(d),s/veh	114.1	10.3	10.3	26.0	40.9	19.0	87.3	0.0	59.0	36.7	0.0	38.1
LnGrp LOS	F	B	B	C	D	B	F		E	D		D
Approach Vol, veh/h		1173			1538			101			107	
Approach Delay, s/veh		46.9			34.1			76.3			37.5	
Approach LOS		D			C			E			D	

Timer	1	2	3	4	5	6	7	8
Assigned Phs		2		4	5	6		8
Phs Duration (G+Y+Rc), s		75.4		25.6	28.0	47.4		9.0
Change Period (Y+Rc), s		* 6.1		4.9	4.4	6.1		4.0
Max Green Setting (Gmax), s		* 64		27.0	23.6	35.0		5.0
Max Q Clear Time (g_c+I1), s		12.8		6.1	25.6	32.9		5.8
Green Ext Time (p_c), s		29.6		0.2	0.0	1.9		0.0

Intersection Summary	
HCM 2010 Ctrl Delay	40.8
HCM 2010 LOS	D

Notes

User approved volume balancing among the lanes for turning movement.

Intersection	
Int Delay, s/veh	2.8

Movement	EBL	EBT	WBT	WBR	SBL	SBR
Vol, veh/h	87	608	1250	38	14	57
Conflicting Peds, #/hr	0	0	0	3	0	0
Sign Control	Free	Free	Free	Free	Stop	Stop
RT Channelized	-	None	-	None	-	None
Storage Length	140	-	-	-	0	-
Veh in Median Storage, #	-	0	0	-	0	-
Grade, %	-	0	0	-	0	-
Peak Hour Factor	87	87	87	87	87	87
Heavy Vehicles, %	2	2	2	2	2	2
Mvmt Flow	100	699	1437	44	16	66

Major/Minor	Major1		Major2		Minor2	
Conflicting Flow All	1480	0	-	0	2008	740
Stage 1	-	-	-	-	1459	-
Stage 2	-	-	-	-	549	-
Critical Hdwy	4.14	-	-	-	6.84	6.94
Critical Hdwy Stg 1	-	-	-	-	5.84	-
Critical Hdwy Stg 2	-	-	-	-	5.84	-
Follow-up Hdwy	2.22	-	-	-	3.52	3.32
Pot Cap-1 Maneuver	451	-	-	-	51	359
Stage 1	-	-	-	-	180	-
Stage 2	-	-	-	-	542	-
Platoon blocked, %		-	-	-		
Mov Cap-1 Maneuver	451	-	-	-	40	359
Mov Cap-2 Maneuver	-	-	-	-	40	-
Stage 1	-	-	-	-	180	-
Stage 2	-	-	-	-	422	-

Approach	EB	WB	SB
HCM Control Delay, s	1.9	0	61.6
HCM LOS			F

Minor Lane/Major Mvmt	EBL	EBT	WBT	WBR	SBLn1
Capacity (veh/h)	451	-	-	-	140
HCM Lane V/C Ratio	0.222	-	-	-	0.583
HCM Control Delay (s)	15.2	-	-	-	61.6
HCM Lane LOS	C	-	-	-	F
HCM 95th %tile Q(veh)	0.8	-	-	-	3

Movement	EBL	EBT	EBR	WBL	WBT	WBR	NBL	NBT	NBR	SBL	SBT	SBR
Lane Configurations												
Volume (veh/h)	14	571	37	126	978	21	230	20	297	40	53	80
Number	5	2	12	1	6	16	3	8	18	7	4	14
Initial Q (Qb), veh	0	0	0	0	0	0	0	0	0	0	0	0
Ped-Bike Adj(A_pbT)	1.00		0.97	1.00		0.97	1.00		0.97	1.00		1.00
Parking Bus, Adj	1.00	1.00	1.00	1.00	1.00	1.00	1.00	1.00	1.00	1.00	1.00	1.00
Adj Sat Flow, veh/h/ln	1863	1863	1863	1863	1863	1900	1863	1863	1863	1863	1863	1863
Adj Flow Rate, veh/h	17	705	46	156	1207	26	284	25	367	49	65	99
Adj No. of Lanes	1	2	1	1	2	0	1	1	1	1	1	1
Peak Hour Factor	0.81	0.81	0.81	0.81	0.81	0.81	0.81	0.81	0.81	0.81	0.81	0.81
Percent Heavy Veh, %	2	2	2	2	2	2	2	2	2	2	2	2
Cap, veh/h	26	1529	662	185	1846	40	252	448	535	63	249	212
Arrive On Green	0.02	0.57	0.57	0.10	0.52	0.52	0.14	0.24	0.24	0.04	0.13	0.13
Sat Flow, veh/h	1774	3539	1533	1774	3540	76	1774	1863	1542	1774	1863	1583
Grp Volume(v), veh/h	17	705	46	156	603	630	284	25	367	49	65	99
Grp Sat Flow(s),veh/h/ln	1774	1770	1533	1774	1770	1847	1774	1863	1542	1774	1863	1583
Q Serve(g_s), s	1.0	12.7	1.5	9.5	27.2	27.2	15.6	1.1	22.5	3.0	3.4	6.4
Cycle Q Clear(g_c), s	1.0	12.7	1.5	9.5	27.2	27.2	15.6	1.1	22.5	3.0	3.4	6.4
Prop In Lane	1.00		1.00	1.00		0.04	1.00		1.00	1.00		1.00
Lane Grp Cap(c), veh/h	26	1529	662	185	923	963	252	448	535	63	249	212
V/C Ratio(X)	0.65	0.46	0.07	0.85	0.65	0.65	1.13	0.06	0.69	0.78	0.26	0.47
Avail Cap(c_a), veh/h	65	1529	662	219	923	963	252	586	650	108	440	374
HCM Platoon Ratio	1.33	1.33	1.33	1.00	1.00	1.00	1.00	1.00	1.00	1.00	1.00	1.00
Upstream Filter(I)	1.00	1.00	1.00	1.00	1.00	1.00	1.00	1.00	1.00	1.00	1.00	1.00
Uniform Delay (d), s/veh	53.6	16.0	13.6	48.4	19.1	19.1	47.2	32.2	31.0	52.6	42.7	44.0
Incr Delay (d2), s/veh	9.7	1.0	0.2	19.5	3.6	3.5	95.9	0.0	1.4	7.6	0.2	0.6
Initial Q Delay(d3),s/veh	0.0	0.0	0.0	0.0	0.0	0.0	0.0	0.0	0.0	0.0	0.0	0.0
%ile BackOfQ(50%),veh/ln	0.6	6.3	0.7	5.7	14.2	14.7	14.3	0.6	9.8	1.6	1.8	2.8
LnGrp Delay(d),s/veh	63.3	17.0	13.8	67.9	22.7	22.6	143.1	32.2	32.5	60.2	43.0	44.6
LnGrp LOS	E	B	B	E	C	C	F	C	C	E	D	D
Approach Vol, veh/h		768			1389			676			213	
Approach Delay, s/veh		17.8			27.7			78.9			47.7	
Approach LOS		B			C			E			D	

Timer	1	2	3	4	5	6	7	8
Assigned Phs	1	2	3	4	5	6	7	8
Phs Duration (G+Y+Rc), s	15.8	54.2	20.0	19.9	6.0	64.0	8.3	31.6
Change Period (Y+Rc), s	4.4	* 6.7	4.4	* 5.2	4.4	6.7	4.4	5.2
Max Green Setting (Gmax), s	13.6	* 35	15.6	* 26	4.0	44.0	6.7	34.6
Max Q Clear Time (g_c+I1), s	11.5	14.7	17.6	8.4	3.0	29.2	5.0	24.5
Green Ext Time (p_c), s	0.0	10.2	0.0	1.1	0.0	8.5	0.0	1.0

Intersection Summary	
HCM 2010 Ctrl Delay	38.0
HCM 2010 LOS	D

Notes

* HCM 2010 computational engine requires equal clearance times for the phases crossing the barrier.

Movement	EBL	EBT	EBR	WBL	WBT	WBR	NBL	NBT	NBR	SBL	SBT	SBR
Lane Configurations												
Volume (veh/h)	33	63	88	99	28	66	12	701	77	63	897	17
Number	7	4	14	3	8	18	5	2	12	1	6	16
Initial Q (Qb), veh	0	0	0	0	0	0	0	0	0	0	0	0
Ped-Bike Adj(A_pbT)	0.99		0.95	0.97		0.99	1.00		0.96	1.00		0.96
Parking Bus, Adj	1.00	1.00	1.00	1.00	1.00	1.00	1.00	1.00	1.00	1.00	1.00	1.00
Adj Sat Flow, veh/h/ln	1900	1863	1900	1900	1863	1900	1863	1863	1900	1863	1863	1900
Adj Flow Rate, veh/h	40	76	106	119	34	80	14	845	93	76	1081	20
Adj No. of Lanes	0	1	0	0	1	0	1	2	0	1	2	0
Peak Hour Factor	0.83	0.83	0.83	0.83	0.83	0.83	0.83	0.83	0.83	0.83	0.83	0.83
Percent Heavy Veh, %	2	2	2	2	2	2	2	2	2	2	2	2
Cap, veh/h	114	184	212	259	84	136	24	1422	157	97	1724	32
Arrive On Green	0.27	0.27	0.27	0.27	0.27	0.27	0.01	0.44	0.44	0.05	0.49	0.49
Sat Flow, veh/h	177	672	777	643	307	497	1774	3199	352	1774	3552	66
Grp Volume(v), veh/h	222	0	0	233	0	0	14	467	471	76	539	562
Grp Sat Flow(s),veh/h/ln	1626	0	0	1446	0	0	1774	1770	1781	1774	1770	1848
Q Serve(g_s), s	0.0	0.0	0.0	1.2	0.0	0.0	0.5	13.0	13.0	2.8	14.6	14.6
Cycle Q Clear(g_c), s	7.2	0.0	0.0	8.4	0.0	0.0	0.5	13.0	13.0	2.8	14.6	14.6
Prop In Lane	0.18		0.48	0.51		0.34	1.00		0.20	1.00		0.04
Lane Grp Cap(c), veh/h	510	0	0	479	0	0	24	787	792	97	859	897
V/C Ratio(X)	0.44	0.00	0.00	0.49	0.00	0.00	0.57	0.59	0.59	0.79	0.63	0.63
Avail Cap(c_a), veh/h	709	0	0	653	0	0	109	787	792	115	859	897
HCM Platoon Ratio	1.00	1.00	1.00	1.00	1.00	1.00	1.00	1.00	1.00	1.00	1.00	1.00
Upstream Filter(I)	1.00	0.00	0.00	1.00	0.00	0.00	1.00	1.00	1.00	0.91	0.91	0.91
Uniform Delay (d), s/veh	19.8	0.0	0.0	20.1	0.0	0.0	31.9	13.6	13.6	30.4	12.4	12.4
Incr Delay (d2), s/veh	0.2	0.0	0.0	0.3	0.0	0.0	7.7	3.3	3.3	19.6	3.2	3.0
Initial Q Delay(d3),s/veh	0.0	0.0	0.0	0.0	0.0	0.0	0.0	0.0	0.0	0.0	0.0	0.0
%ile BackOfQ(50%),veh/ln	3.4	0.0	0.0	3.6	0.0	0.0	0.3	7.0	7.0	1.9	7.8	8.1
LnGrp Delay(d),s/veh	20.0	0.0	0.0	20.4	0.0	0.0	39.5	16.9	16.9	50.0	15.5	15.4
LnGrp LOS	C			C			D	B	B	D	B	B
Approach Vol, veh/h		222			233			952			1177	
Approach Delay, s/veh		20.0			20.4			17.2			17.7	
Approach LOS		C			C			B			B	

Timer	1	2	3	4	5	6	7	8
Assigned Phs	1	2		4	5	6		8
Phs Duration (G+Y+Rc), s	7.9	34.4		22.7	5.3	37.1		22.7
Change Period (Y+Rc), s	4.4	* 5.5		4.9	4.4	5.5		4.9
Max Green Setting (Gmax), s	4.3	* 20		26.1	4.0	20.1		26.1
Max Q Clear Time (g_c+I1), s	4.8	15.0		9.2	2.5	16.6		10.4
Green Ext Time (p_c), s	0.0	4.9		1.9	0.0	3.3		1.8

Intersection Summary	
HCM 2010 Ctrl Delay	18.0
HCM 2010 LOS	B

Notes

* HCM 2010 computational engine requires equal clearance times for the phases crossing the barrier.

Movement	EBL	EBT	EBR	WBL	WBT	WBR	NBL	NBT	NBR	SBL	SBT	SBR
Lane Configurations												
Volume (veh/h)	108	107	110	45	63	39	78	552	35	72	684	42
Number	7	4	14	3	8	18	5	2	12	1	6	16
Initial Q (Qb), veh	0	0	0	0	0	0	0	0	0	0	0	0
Ped-Bike Adj(A_pbT)	0.99		0.97	0.99		0.97	1.00		0.95	1.00		0.95
Parking Bus, Adj	1.00	1.00	1.00	1.00	1.00	1.00	1.00	1.00	1.00	1.00	1.00	1.00
Adj Sat Flow, veh/h/ln	1863	1863	1900	1863	1863	1900	1863	1863	1900	1863	1863	1900
Adj Flow Rate, veh/h	121	120	124	51	71	44	88	620	39	81	769	47
Adj No. of Lanes	1	1	0	1	1	0	1	2	0	1	2	0
Peak Hour Factor	0.89	0.89	0.89	0.89	0.89	0.89	0.89	0.89	0.89	0.89	0.89	0.89
Percent Heavy Veh, %	2	2	2	2	2	2	2	2	2	2	2	2
Cap, veh/h	358	220	227	248	283	175	113	1666	105	104	1652	101
Arrive On Green	0.27	0.27	0.27	0.27	0.27	0.27	0.06	0.49	0.49	0.06	0.49	0.49
Sat Flow, veh/h	1257	826	854	1120	1063	659	1774	3371	212	1774	3376	206
Grp Volume(v), veh/h	121	0	244	51	0	115	88	325	334	81	403	413
Grp Sat Flow(s),veh/h/ln	1257	0	1680	1120	0	1723	1774	1770	1813	1774	1770	1813
Q Serve(g_s), s	6.7	0.0	10.0	3.3	0.0	4.2	3.9	9.1	9.1	3.6	12.0	12.1
Cycle Q Clear(g_c), s	10.9	0.0	10.0	13.3	0.0	4.2	3.9	9.1	9.1	3.6	12.0	12.1
Prop In Lane	1.00		0.51	1.00		0.38	1.00		0.12	1.00		0.11
Lane Grp Cap(c), veh/h	358	0	447	248	0	458	113	875	896	104	866	887
V/C Ratio(X)	0.34	0.00	0.55	0.21	0.00	0.25	0.78	0.37	0.37	0.78	0.47	0.47
Avail Cap(c_a), veh/h	527	0	672	398	0	689	191	875	896	204	866	887
HCM Platoon Ratio	1.00	1.00	1.00	1.00	1.00	1.00	1.00	1.00	1.00	1.00	1.00	1.00
Upstream Filter(I)	1.00	0.00	1.00	1.00	0.00	1.00	0.81	0.81	0.81	0.88	0.88	0.88
Uniform Delay (d), s/veh	27.4	0.0	25.2	30.9	0.0	23.1	36.9	12.5	12.5	37.1	13.5	13.5
Incr Delay (d2), s/veh	0.2	0.0	0.4	0.2	0.0	0.1	3.5	1.0	1.0	4.1	1.6	1.6
Initial Q Delay(d3),s/veh	0.0	0.0	0.0	0.0	0.0	0.0	0.0	0.0	0.0	0.0	0.0	0.0
%ile BackOfQ(50%),veh/ln	2.3	0.0	4.7	1.0	0.0	2.0	2.0	4.7	4.8	1.9	6.2	6.3
LnGrp Delay(d),s/veh	27.6	0.0	25.6	31.1	0.0	23.2	40.4	13.5	13.5	41.2	15.1	15.1
LnGrp LOS	C		C	C		C	D	B	B	D	B	B
Approach Vol, veh/h		365			166			747			897	
Approach Delay, s/veh		26.3			25.6			16.7			17.4	
Approach LOS		C			C			B			B	

Timer	1	2	3	4	5	6	7	8
Assigned Phs	1	2		4	5	6		8
Phs Duration (G+Y+Rc), s	9.1	44.7		26.2	9.5	44.3		26.2
Change Period (Y+Rc), s	4.4	5.2		4.9	4.4	* 5.2		4.9
Max Green Setting (Gmax), s	9.3	24.3		32.0	8.6	* 25		32.0
Max Q Clear Time (g_c+I1), s	5.6	11.1		12.9	5.9	14.1		15.3
Green Ext Time (p_c), s	0.0	8.0		1.7	0.0	7.1		1.7

Intersection Summary	
HCM 2010 Ctrl Delay	19.3
HCM 2010 LOS	B

Notes

* HCM 2010 computational engine requires equal clearance times for the phases crossing the barrier.

Movement	EBL	EBT	EBR	WBL	WBT	WBR	NBL	NBT	NBR	SBL	SBT	SBR
Lane Configurations												
Volume (veh/h)	149	119	61	60	141	304	65	757	52	192	776	44
Number	7	4	14	3	8	18	5	2	12	1	6	16
Initial Q (Qb), veh	0	0	0	0	0	0	0	0	0	0	0	0
Ped-Bike Adj(A_pbT)	0.97		0.98	0.99		0.93	1.00		0.96	1.00		0.97
Parking Bus, Adj	1.00	1.00	1.00	1.00	1.00	1.00	1.00	1.00	1.00	1.00	1.00	1.00
Adj Sat Flow, veh/h/ln	1863	1863	1900	1863	1863	1863	1863	1863	1900	1863	1863	1900
Adj Flow Rate, veh/h	164	131	67	66	155	334	71	832	57	211	853	48
Adj No. of Lanes	1	1	0	1	1	1	1	2	0	1	2	0
Peak Hour Factor	0.91	0.91	0.91	0.91	0.91	0.91	0.91	0.91	0.91	0.91	0.91	0.91
Percent Heavy Veh, %	2	2	2	2	2	2	2	2	2	2	2	2
Cap, veh/h	335	383	196	386	620	490	91	1263	87	180	1452	82
Arrive On Green	0.33	0.33	0.33	0.33	0.33	0.33	0.05	0.38	0.38	0.10	0.43	0.43
Sat Flow, veh/h	880	1153	590	1172	1863	1474	1774	3352	230	1774	3400	191
Grp Volume(v), veh/h	164	0	198	66	155	334	71	439	450	211	444	457
Grp Sat Flow(s),veh/h/ln	880	0	1742	1172	1863	1474	1774	1770	1812	1774	1770	1822
Q Serve(g_s), s	12.5	0.0	6.4	3.4	4.5	14.7	3.0	15.4	15.4	7.6	14.4	14.4
Cycle Q Clear(g_c), s	17.1	0.0	6.4	9.8	4.5	14.7	3.0	15.4	15.4	7.6	14.4	14.4
Prop In Lane	1.00		0.34	1.00		1.00	1.00		0.13	1.00		0.11
Lane Grp Cap(c), veh/h	335	0	579	386	620	490	91	667	683	180	755	778
V/C Ratio(X)	0.49	0.00	0.34	0.17	0.25	0.68	0.78	0.66	0.66	1.17	0.59	0.59
Avail Cap(c_a), veh/h	371	0	650	433	695	550	125	667	683	180	755	778
HCM Platoon Ratio	1.00	1.00	1.00	1.00	1.00	1.00	1.00	1.00	1.00	1.00	1.00	1.00
Upstream Filter(I)	1.00	0.00	1.00	1.00	1.00	1.00	0.94	0.94	0.94	0.09	0.09	0.09
Uniform Delay (d), s/veh	24.4	0.0	18.8	22.5	18.2	21.6	35.2	19.4	19.4	33.7	16.4	16.4
Incr Delay (d2), s/veh	0.4	0.0	0.1	0.1	0.1	2.1	12.1	4.8	4.6	83.9	0.3	0.3
Initial Q Delay(d3),s/veh	0.0	0.0	0.0	0.0	0.0	0.0	0.0	0.0	0.0	0.0	0.0	0.0
%ile BackOfQ(50%),veh/ln	8.0	0.0	3.1	1.1	2.3	6.2	1.8	8.3	8.5	7.9	7.1	7.3
LnGrp Delay(d),s/veh	24.8	0.0	19.0	22.6	18.3	23.7	47.2	24.1	24.0	117.6	16.7	16.7
LnGrp LOS	C		B	C	B	C	D	C	C	F	B	B
Approach Vol, veh/h		362			555			960			1112	
Approach Delay, s/veh		21.6			22.1			25.8			35.9	
Approach LOS		C			C			C			D	

Timer	1	2	3	4	5	6	7	8
Assigned Phs	1	2		4	5	6		8
Phs Duration (G+Y+Rc), s	12.0	33.2		29.8	8.2	36.9		29.8
Change Period (Y+Rc), s	4.4	4.9		4.9	4.4	4.9		4.9
Max Green Setting (Gmax), s	7.6	25.2		28.0	5.3	27.5		28.0
Max Q Clear Time (g_c+I1), s	19.6	17.4		19.1	5.0	16.4		16.7
Green Ext Time (p_c), s	0.0	7.4		2.2	0.0	10.4		2.4

Intersection Summary	
HCM 2010 Ctrl Delay	28.3
HCM 2010 LOS	C

Movement	EBL	EBT	EBR	WBL	WBT	WBR	NBL	NBT	NBR	SBL	SBT	SBR
Lane Configurations												
Volume (veh/h)	154	714	287	562	589	291	313	609	549	150	493	122
Number	5	2	12	1	6	16	3	8	18	7	4	14
Initial Q (Qb), veh	0	0	0	0	0	0	0	0	0	0	0	0
Ped-Bike Adj(A_pbT)	1.00		0.97	1.00		0.98	1.00		0.96	1.00		0.85
Parking Bus, Adj	1.00	1.00	1.00	1.00	1.00	1.00	1.00	1.00	1.00	1.00	1.00	1.00
Adj Sat Flow, veh/h/ln	1863	1863	1863	1863	1863	1863	1863	1863	1863	1863	1863	1900
Adj Flow Rate, veh/h	167	776	312	611	640	316	340	662	597	163	536	133
Adj No. of Lanes	1	2	1	2	2	1	1	2	1	2	2	0
Peak Hour Factor	0.92	0.92	0.92	0.92	0.92	0.92	0.92	0.92	0.92	0.92	0.92	0.92
Percent Heavy Veh, %	2	2	2	2	2	2	2	2	2	2	2	2
Cap, veh/h	191	901	392	651	1190	523	361	1369	590	157	621	153
Arrive On Green	0.11	0.25	0.25	0.19	0.34	0.34	0.20	0.39	0.39	0.05	0.23	0.23
Sat Flow, veh/h	1774	3539	1540	3442	3539	1555	1774	3539	1525	3442	2711	667
Grp Volume(v), veh/h	167	776	312	611	640	316	340	662	597	163	348	321
Grp Sat Flow(s),veh/h/ln	1774	1770	1540	1721	1770	1555	1774	1770	1525	1721	1770	1608
Q Serve(g_s), s	13.4	30.4	27.5	25.4	21.2	24.5	27.4	20.5	56.1	6.6	27.4	27.9
Cycle Q Clear(g_c), s	13.4	30.4	27.5	25.4	21.2	24.5	27.4	20.5	56.1	6.6	27.4	27.9
Prop In Lane	1.00		1.00	1.00		1.00	1.00		1.00	1.00		0.41
Lane Grp Cap(c), veh/h	191	901	392	651	1190	523	361	1369	590	157	405	368
V/C Ratio(X)	0.88	0.86	0.80	0.94	0.54	0.60	0.94	0.48	1.01	1.04	0.86	0.87
Avail Cap(c_a), veh/h	301	901	392	657	1190	523	374	1369	590	157	405	368
HCM Platoon Ratio	1.00	1.00	1.00	1.00	1.00	1.00	1.00	1.00	1.00	1.00	1.00	1.00
Upstream Filter(I)	1.00	1.00	1.00	1.00	1.00	1.00	0.71	0.71	0.71	1.00	1.00	1.00
Uniform Delay (d), s/veh	63.8	51.6	50.5	57.9	39.0	40.1	56.9	33.5	44.4	69.2	53.6	53.8
Incr Delay (d2), s/veh	10.2	10.6	15.4	20.8	1.7	5.1	24.7	0.9	34.2	83.0	20.4	23.4
Initial Q Delay(d3),s/veh	0.0	0.0	0.0	0.0	0.0	0.0	0.0	0.0	0.0	0.2	0.0	0.0
%ile BackOfQ(50%),veh/ln	7.1	16.2	13.4	13.9	10.7	11.3	15.9	10.2	29.2	4.9	15.7	14.8
LnGrp Delay(d),s/veh	74.0	62.2	65.9	78.8	40.7	45.2	81.6	34.4	78.7	152.4	74.1	77.3
LnGrp LOS	E	E	E	E	D	D	F	C	F	F	E	E
Approach Vol, veh/h		1255			1567			1599			832	
Approach Delay, s/veh		64.7			56.5			61.0			90.7	
Approach LOS		E			E			E			F	

Timer	1	2	3	4	5	6	7	8
Assigned Phs	1	2	3	4	5	6	7	8
Phs Duration (G+Y+Rc), s	31.8	42.2	33.9	38.4	20.0	54.1	11.0	61.3
Change Period (Y+Rc), s	4.4	5.3	4.4	5.2	4.4	5.3	4.4	* 5.2
Max Green Setting (Gmax), s	27.7	35.6	30.6	31.8	24.6	38.7	6.6	* 56
Max Q Clear Time (g_c+I1), s	27.4	32.4	29.4	29.9	15.4	26.5	8.6	58.1
Green Ext Time (p_c), s	0.1	3.0	0.1	1.8	0.1	10.5	0.0	0.0

Intersection Summary	
HCM 2010 Ctrl Delay	65.2
HCM 2010 LOS	E

Notes

* HCM 2010 computational engine requires equal clearance times for the phases crossing the barrier.

Movement	WBL	WBR	NBT	NBR	SBL	SBT
Lane Configurations						
Volume (veh/h)	365	242	1797	588	250	1049
Number	3	18	2	12	1	6
Initial Q (Qb), veh	0	0	0	0	0	0
Ped-Bike Adj(A_pbT)	1.00	1.00		0.98	1.00	
Parking Bus, Adj	1.00	1.00	1.00	1.00	1.00	1.00
Adj Sat Flow, veh/h/ln	1863	1863	1863	1863	1863	1863
Adj Flow Rate, veh/h	442	222	1975	646	275	1153
Adj No. of Lanes	2	1	2	1	2	2
Peak Hour Factor	0.91	0.91	0.91	0.91	0.91	0.91
Percent Heavy Veh, %	2	2	2	2	2	2
Cap, veh/h	557	248	2236	1226	323	2677
Arrive On Green	0.16	0.16	0.63	0.63	0.09	0.76
Sat Flow, veh/h	3548	1583	3632	1547	3442	3632
Grp Volume(v), veh/h	442	222	1975	646	275	1153
Grp Sat Flow(s),veh/h/ln	1774	1583	1770	1547	1721	1770
Q Serve(g_s), s	17.2	19.7	66.5	21.7	11.3	16.8
Cycle Q Clear(g_c), s	17.2	19.7	66.5	21.7	11.3	16.8
Prop In Lane	1.00	1.00		1.00	1.00	
Lane Grp Cap(c), veh/h	557	248	2236	1226	323	2677
V/C Ratio(X)	0.79	0.89	0.88	0.53	0.85	0.43
Avail Cap(c_a), veh/h	670	299	2236	1226	385	2757
HCM Platoon Ratio	1.00	1.00	1.00	1.00	1.00	1.00
Upstream Filter(I)	1.00	1.00	1.00	1.00	1.00	1.00
Uniform Delay (d), s/veh	58.1	59.1	21.9	5.5	63.8	6.3
Incr Delay (d2), s/veh	4.4	22.0	4.7	0.6	12.8	0.3
Initial Q Delay(d3),s/veh	0.0	0.0	0.0	0.0	0.0	0.0
%ile BackOfQ(50%),veh/ln	8.8	10.1	33.5	16.2	5.9	8.3
LnGrp Delay(d),s/veh	62.5	81.1	26.6	6.0	76.6	6.6
LnGrp LOS	E	F	C	A	E	A
Approach Vol, veh/h	664		2621			1428
Approach Delay, s/veh	68.7		21.5			20.0
Approach LOS	E		C			C

Timer	1	2	3	4	5	6	7	8
Assigned Phs	1	2				6		8
Phs Duration (G+Y+Rc), s	17.8	96.5				114.4		28.6
Change Period (Y+Rc), s	4.4	6.2				* 6.2		6.2
Max Green Setting (Gmax), s	15.6	90.2				* 1.1E2		27.0
Max Q Clear Time (g_c+I1), s	13.3	68.5				18.8		21.7
Green Ext Time (p_c), s	0.2	21.6				89.3		0.8

Intersection Summary	
HCM 2010 Ctrl Delay	27.7
HCM 2010 LOS	C

Notes

User approved volume balancing among the lanes for turning movement.

Movement	EBL	EBT	WBT	WBR	SBL	SBR
Lane Configurations						
Volume (veh/h)	438	656	532	544	301	54
Number	5	2	6	16	7	14
Initial Q (Qb), veh	0	0	0	0	0	0
Ped-Bike Adj(A_pbT)	1.00			1.00	1.00	1.00
Parking Bus, Adj	1.00	1.00	1.00	1.00	1.00	1.00
Adj Sat Flow, veh/h/ln	1863	1863	1863	1863	1863	1863
Adj Flow Rate, veh/h	562	841	682	697	386	69
Adj No. of Lanes	1	2	2	1	2	1
Peak Hour Factor	0.78	0.78	0.78	0.78	0.78	0.78
Percent Heavy Veh, %	2	2	2	2	2	2
Cap, veh/h	599	2559	1175	755	514	229
Arrive On Green	0.34	0.72	0.33	0.33	0.14	0.14
Sat Flow, veh/h	1774	3632	3632	1583	3548	1583
Grp Volume(v), veh/h	562	841	682	697	386	69
Grp Sat Flow(s),veh/h/ln	1774	1770	1770	1583	1774	1583
Q Serve(g_s), s	25.3	7.1	13.2	27.4	8.6	3.2
Cycle Q Clear(g_c), s	25.3	7.1	13.2	27.4	8.6	3.2
Prop In Lane	1.00			1.00	1.00	1.00
Lane Grp Cap(c), veh/h	599	2559	1175	755	514	229
V/C Ratio(X)	0.94	0.33	0.58	0.92	0.75	0.30
Avail Cap(c_a), veh/h	701	2744	1175	755	649	290
HCM Platoon Ratio	1.00	1.00	1.00	1.00	1.00	1.00
Upstream Filter(I)	1.00	1.00	1.00	1.00	1.00	1.00
Uniform Delay (d), s/veh	26.5	4.2	22.8	18.5	33.9	31.6
Incr Delay (d2), s/veh	17.6	0.1	0.9	17.2	5.7	1.6
Initial Q Delay(d3),s/veh	0.0	0.0	0.0	0.0	0.0	0.0
%ile BackOfQ(50%),veh/ln	15.3	3.4	6.6	19.3	4.6	3.0
LnGrp Delay(d),s/veh	44.1	4.3	23.7	35.7	39.5	33.1
LnGrp LOS	D	A	C	D	D	C
Approach Vol, veh/h		1403	1379		455	
Approach Delay, s/veh		20.2	29.8		38.6	
Approach LOS		C	C		D	

Timer	1	2	3	4	5	6	7	8
Assigned Phs		2		4	5	6		
Phs Duration (G+Y+Rc), s		65.7		16.9	32.3	33.4		
Change Period (Y+Rc), s		6.0		4.9	4.4	* 6		
Max Green Setting (Gmax), s		64.0		15.1	32.6	* 27		
Max Q Clear Time (g_c+I1), s		9.1		10.6	27.3	29.4		
Green Ext Time (p_c), s		38.5		1.3	0.6	0.0		

Intersection Summary	
HCM 2010 Ctrl Delay	26.9
HCM 2010 LOS	C

Notes

User approved volume balancing among the lanes for turning movement.

Movement	EBL	EBT	EBR	WBL	WBT	WBR	NBL	NBT	NBR	SBL	SBT	SBR
Lane Configurations												
Volume (veh/h)	177	869	8	14	1289	216	68	7	82	152	9	115
Number	5	2	12	1	6	16	3	8	18	7	4	14
Initial Q (Qb), veh	0	0	0	0	0	0	0	0	0	0	0	0
Ped-Bike Adj(A_pbT)	1.00		1.00	1.00		1.00	1.00		1.00	1.00		1.00
Parking Bus, Adj	1.00	1.00	1.00	1.00	1.00	1.00	1.00	1.00	1.00	1.00	1.00	1.00
Adj Sat Flow, veh/h/ln	1863	1863	1900	1863	1863	1900	1900	1863	1863	1863	1863	1900
Adj Flow Rate, veh/h	208	1022	9	16	1516	254	80	8	96	179	11	135
Adj No. of Lanes	1	2	0	1	2	0	0	1	1	1	1	0
Peak Hour Factor	0.85	0.85	0.85	0.85	0.85	0.85	0.85	0.85	0.85	0.85	0.85	0.85
Percent Heavy Veh, %	2	2	2	2	2	2	2	2	2	2	2	2
Cap, veh/h	235	2192	19	24	1494	246	262	24	401	212	31	375
Arrive On Green	0.13	0.61	0.61	0.01	0.49	0.49	0.25	0.25	0.25	0.25	0.25	0.25
Sat Flow, veh/h	1774	3595	32	1774	3044	500	816	94	1583	1285	121	1481
Grp Volume(v), veh/h	208	503	528	16	869	901	88	0	96	179	0	146
Grp Sat Flow(s),veh/h/ln	1774	1770	1857	1774	1770	1774	910	0	1583	1285	0	1601
Q Serve(g_s), s	14.3	19.2	19.2	1.1	60.7	60.7	7.2	0.0	6.0	14.8	0.0	9.3
Cycle Q Clear(g_c), s	14.3	19.2	19.2	1.1	60.7	60.7	16.5	0.0	6.0	31.3	0.0	9.3
Prop In Lane	1.00		0.02	1.00		0.28	0.91		1.00	1.00		0.92
Lane Grp Cap(c), veh/h	235	1079	1132	24	869	871	286	0	401	212	0	405
V/C Ratio(X)	0.88	0.47	0.47	0.66	1.00	1.03	0.31	0.00	0.24	0.84	0.00	0.36
Avail Cap(c_a), veh/h	338	1118	1174	79	869	871	286	0	401	212	0	405
HCM Platoon Ratio	1.00	1.00	1.00	1.00	1.00	1.00	1.00	1.00	1.00	1.00	1.00	1.00
Upstream Filter(I)	1.00	1.00	1.00	1.00	1.00	1.00	1.00	0.00	1.00	1.00	0.00	1.00
Uniform Delay (d), s/veh	52.7	13.2	13.2	60.7	31.5	31.5	44.3	0.0	36.8	55.5	0.0	38.0
Incr Delay (d2), s/veh	13.5	1.2	1.2	10.8	30.8	39.6	0.2	0.0	0.1	24.4	0.0	0.2
Initial Q Delay(d3),s/veh	0.0	0.0	0.0	0.0	0.0	0.0	0.0	0.0	0.0	0.0	0.0	0.0
%ile BackOfQ(50%),veh/ln	7.9	9.7	10.2	0.6	36.9	39.1	2.7	0.0	2.6	7.5	0.0	4.1
LnGrp Delay(d),s/veh	66.3	14.4	14.3	71.5	62.3	71.1	44.6	0.0	36.9	79.9	0.0	38.2
LnGrp LOS	E	B	B	E	F	F	D		D	E		D
Approach Vol, veh/h		1239			1786			184			325	
Approach Delay, s/veh		23.1			66.8			40.5			61.2	
Approach LOS		C			E			D			E	

Timer	1	2	3	4	5	6	7	8
Assigned Phs	1	2		4	5	6		8
Phs Duration (G+Y+Rc), s	6.1	81.4		36.2	20.8	66.7		36.2
Change Period (Y+Rc), s	4.4	* 6		4.9	4.4	6.0		4.9
Max Green Setting (Gmax), s	5.5	* 78		31.3	23.6	59.8		31.3
Max Q Clear Time (g_c+I1), s	3.1	21.2		33.3	16.3	62.7		18.5
Green Ext Time (p_c), s	0.0	54.3		0.0	0.2	0.0		1.2

Intersection Summary	
HCM 2010 Ctrl Delay	49.6
HCM 2010 LOS	D

Notes

* HCM 2010 computational engine requires equal clearance times for the phases crossing the barrier.

Movement	EBL	EBT	EBR	WBL	WBT	WBR	NBL	NBT	NBR	SBL	SBT	SBR
Lane Configurations												
Volume (veh/h)	251	443	248	435	776	506	166	82	251	267	106	173
Number	5	2	12	1	6	16	3	8	18	7	4	14
Initial Q (Qb), veh	0	0	0	0	0	0	0	0	0	0	0	0
Ped-Bike Adj(A_pbT)	1.00		1.00	1.00		0.98	1.00		1.00	1.00		1.00
Parking Bus, Adj	1.00	1.00	1.00	1.00	1.00	1.00	1.00	1.00	1.00	1.00	1.00	1.00
Adj Sat Flow, veh/h/ln	1863	1863	1863	1863	1863	1863	1863	1863	1863	1863	1863	1863
Adj Flow Rate, veh/h	285	503	270	473	882	575	180	89	273	303	115	197
Adj No. of Lanes	1	2	1	1	2	1	1	2	1	2	1	1
Peak Hour Factor	0.88	0.88	0.92	0.92	0.88	0.88	0.92	0.92	0.92	0.88	0.92	0.88
Percent Heavy Veh, %	2	2	2	2	2	2	2	2	2	2	2	2
Cap, veh/h	319	981	631	516	1375	786	216	505	687	394	252	499
Arrive On Green	0.18	0.28	0.28	0.29	0.39	0.39	0.12	0.14	0.14	0.11	0.14	0.14
Sat Flow, veh/h	1774	3539	1583	1774	3539	1557	1774	3539	1583	3442	1863	1580
Grp Volume(v), veh/h	285	503	270	473	882	575	180	89	273	303	115	197
Grp Sat Flow(s),veh/h/ln	1774	1770	1583	1774	1770	1557	1774	1770	1583	1721	1863	1580
Q Serve(g_s), s	16.2	12.3	12.7	26.6	20.9	30.0	10.2	2.3	12.2	8.8	5.9	10.1
Cycle Q Clear(g_c), s	16.2	12.3	12.7	26.6	20.9	30.0	10.2	2.3	12.2	8.8	5.9	10.1
Prop In Lane	1.00		1.00	1.00		1.00	1.00		1.00	1.00		1.00
Lane Grp Cap(c), veh/h	319	981	631	516	1375	786	216	505	687	394	252	499
V/C Ratio(X)	0.89	0.51	0.43	0.92	0.64	0.73	0.83	0.18	0.40	0.77	0.46	0.40
Avail Cap(c_a), veh/h	620	1064	669	945	1713	935	439	549	707	1005	372	600
HCM Platoon Ratio	1.00	1.00	1.00	1.00	1.00	1.00	1.00	1.00	1.00	1.00	1.00	1.00
Upstream Filter(I)	1.00	1.00	1.00	1.00	1.00	1.00	1.00	1.00	1.00	1.00	1.00	1.00
Uniform Delay (d), s/veh	41.3	31.4	22.5	35.3	25.7	20.2	44.3	38.9	20.0	44.3	41.0	27.6
Incr Delay (d2), s/veh	3.5	0.3	0.3	7.0	0.3	1.8	8.2	0.2	0.4	3.2	0.5	0.2
Initial Q Delay(d3),s/veh	0.0	0.0	0.0	0.0	0.0	0.0	0.0	0.0	0.0	0.0	0.0	0.0
%ile BackOfQ(50%),veh/ln	8.2	6.0	5.6	14.0	10.2	13.2	5.5	1.1	5.3	4.4	3.1	4.4
LnGrp Delay(d),s/veh	44.9	31.6	22.7	42.3	25.9	22.0	52.4	39.0	20.3	47.5	41.5	27.8
LnGrp LOS	D	C	C	D	C	C	D	D	C	D	D	C
Approach Vol, veh/h		1058			1930			542			615	
Approach Delay, s/veh		32.9			28.8			34.1			40.1	
Approach LOS		C			C			C			D	

Timer	1	2	3	4	5	6	7	8
Assigned Phs	1	2	3	4	5	6	7	8
Phs Duration (G+Y+Rc), s	34.5	33.1	17.0	18.5	23.0	44.5	16.3	19.2
Change Period (Y+Rc), s	4.5	4.5	4.5	4.5	4.5	4.5	4.5	4.5
Max Green Setting (Gmax), s	51.9	31.0	25.5	20.6	36.0	49.9	30.1	16.0
Max Q Clear Time (g_c+I1), s	28.6	14.7	12.2	12.1	18.2	32.0	10.8	14.2
Green Ext Time (p_c), s	1.4	7.7	0.4	1.6	0.3	8.0	1.0	0.5

Intersection Summary	
HCM 2010 Ctrl Delay	32.2
HCM 2010 LOS	C

Movement	EBL	EBT	EBR	WBL	WBT	WBR	NBL	NBT	NBR	SBL	SBT	SBR
Lane Configurations												
Volume (veh/h)	0	621	254	351	1233	2	411	2	167	20	1	7
Number	5	2	12	1	6	16	3	8	18	7	4	14
Initial Q (Qb), veh	0	0	0	0	0	0	0	0	0	0	0	0
Ped-Bike Adj(A_pbT)	1.00		0.99	1.00		0.96	1.00		0.98	1.00		1.00
Parking Bus, Adj	1.00	1.00	1.00	1.00	1.00	1.00	1.00	1.00	1.00	1.00	1.00	1.00
Adj Sat Flow, veh/h/ln	1863	1863	1900	1863	1863	1900	1900	1863	1863	1900	1863	1900
Adj Flow Rate, veh/h	0	654	267	369	1298	2	433	2	176	21	1	7
Adj No. of Lanes	1	3	0	2	2	0	0	1	1	0	1	0
Peak Hour Factor	0.95	0.95	0.95	0.95	0.95	0.95	0.95	0.95	0.95	0.95	0.95	0.95
Percent Heavy Veh, %	2	2	2	2	2	2	2	2	2	2	2	2
Cap, veh/h	2	1326	531	446	1981	3	537	2	743	94	12	14
Arrive On Green	0.00	0.37	0.37	0.13	0.55	0.55	0.35	0.35	0.35	0.35	0.35	0.35
Sat Flow, veh/h	1774	3556	1424	3442	3626	6	1347	6	1557	92	34	40
Grp Volume(v), veh/h	0	623	298	369	634	666	435	0	176	29	0	0
Grp Sat Flow(s),veh/h/ln	1774	1695	1590	1721	1770	1862	1353	0	1557	167	0	0
Q Serve(g_s), s	0.0	14.1	14.5	10.5	25.3	25.3	0.0	0.0	6.7	1.1	0.0	0.0
Cycle Q Clear(g_c), s	0.0	14.1	14.5	10.5	25.3	25.3	31.1	0.0	6.7	32.3	0.0	0.0
Prop In Lane	1.00		0.90	1.00		0.00	1.00		1.00	0.72		0.24
Lane Grp Cap(c), veh/h	2	1265	593	446	967	1017	539	0	743	120	0	0
V/C Ratio(X)	0.00	0.49	0.50	0.83	0.66	0.66	0.81	0.00	0.24	0.24	0.00	0.00
Avail Cap(c_a), veh/h	71	1265	593	757	967	1017	546	0	750	126	0	0
HCM Platoon Ratio	1.00	1.00	1.00	1.00	1.00	1.00	1.00	1.00	1.00	1.00	1.00	1.00
Upstream Filter(I)	0.00	0.82	0.82	0.85	0.85	0.85	1.00	0.00	1.00	1.00	0.00	0.00
Uniform Delay (d), s/veh	0.0	24.1	24.2	42.4	16.0	16.0	31.6	0.0	15.5	32.5	0.0	0.0
Incr Delay (d2), s/veh	0.0	1.1	2.5	1.3	3.0	2.8	8.2	0.0	0.1	0.6	0.0	0.0
Initial Q Delay(d3),s/veh	0.0	0.0	0.0	0.0	0.0	0.0	0.0	0.0	0.0	0.0	0.0	0.0
%ile BackOfQ(50%),veh/ln	0.0	6.8	6.7	5.1	13.1	13.8	12.8	0.0	2.9	0.8	0.0	0.0
LnGrp Delay(d),s/veh	0.0	25.2	26.7	43.7	19.0	18.8	39.8	0.0	15.6	33.1	0.0	0.0
LnGrp LOS		C	C	D	B	B	D		B	C		
Approach Vol, veh/h		921			1669			611			29	
Approach Delay, s/veh		25.7			24.4			32.8			33.1	
Approach LOS		C			C			C			C	

Timer	1	2	3	4	5	6	7	8
Assigned Phs	1	2		4	5	6		8
Phs Duration (G+Y+Rc), s	17.4	43.2		39.4	0.0	60.6		39.4
Change Period (Y+Rc), s	4.4	5.9		4.9	4.4	* 5.9		4.9
Max Green Setting (Gmax), s	22.6	27.8		35.0	4.0	* 46		35.0
Max Q Clear Time (g_c+I1), s	12.5	16.5		34.3	0.0	27.3		33.1
Green Ext Time (p_c), s	0.5	9.4		0.2	0.0	14.5		0.6

Intersection Summary	
HCM 2010 Ctrl Delay	26.4
HCM 2010 LOS	C

Notes

* HCM 2010 computational engine requires equal clearance times for the phases crossing the barrier.

Movement	EBL	EBT	EBR	WBL	WBT	WBR	NBL	NBT	NBR	SBL	SBT	SBR
Lane Configurations												
Volume (veh/h)	9	800	8	38	1241	0	4	0	16	0	0	0
Number	5	2	12	1	6	16	3	8	18			
Initial Q (Qb), veh	0	0	0	0	0	0	0	0	0			
Ped-Bike Adj(A_pbT)	1.00		1.00	1.00		1.00	1.00		1.00			
Parking Bus, Adj	1.00	1.00	1.00	1.00	1.00	1.00	1.00	1.00	1.00			
Adj Sat Flow, veh/h/ln	1863	1863	1900	1863	1863	0	1863	0	1863			
Adj Flow Rate, veh/h	10	964	10	46	1495	0	5	0	19			
Adj No. of Lanes	1	3	0	2	2	0	1	0	1			
Peak Hour Factor	0.92	0.83	0.83	0.83	0.83	0.92	0.83	0.92	0.83			
Percent Heavy Veh, %	2	2	2	2	2	0	2	0	2			
Cap, veh/h	18	3927	41	113	2778	0	37	0	33			
Arrive On Green	0.01	0.76	0.76	0.03	0.78	0.00	0.02	0.00	0.02			
Sat Flow, veh/h	1774	5189	54	3442	3632	0	1774	0	1583			
Grp Volume(v), veh/h	10	630	344	46	1495	0	5	0	19			
Grp Sat Flow(s),veh/h/ln	1774	1695	1853	1721	1770	0	1774	0	1583			
Q Serve(g_s), s	0.4	4.2	4.2	1.0	11.8	0.0	0.2	0.0	0.9			
Cycle Q Clear(g_c), s	0.4	4.2	4.2	1.0	11.8	0.0	0.2	0.0	0.9			
Prop In Lane	1.00		0.03	1.00		0.00	1.00		1.00			
Lane Grp Cap(c), veh/h	18	2566	1402	113	2778	0	37	0	33			
V/C Ratio(X)	0.56	0.25	0.25	0.41	0.54	0.00	0.13	0.00	0.57			
Avail Cap(c_a), veh/h	95	2566	1402	184	2778	0	733	0	654			
HCM Platoon Ratio	1.00	1.00	1.00	1.00	1.00	1.00	1.00	1.00	1.00			
Upstream Filter(I)	0.88	0.88	0.88	1.00	1.00	0.00	1.00	0.00	1.00			
Uniform Delay (d), s/veh	37.0	2.7	2.7	35.5	3.0	0.0	36.0	0.0	36.4			
Incr Delay (d2), s/veh	22.2	0.2	0.4	0.9	0.8	0.0	0.6	0.0	5.6			
Initial Q Delay(d3),s/veh	0.0	0.0	0.0	0.0	0.0	0.0	0.0	0.0	0.0			
%ile BackOfQ(50%),veh/ln	0.3	2.0	2.2	0.5	5.9	0.0	0.1	0.0	0.4			
LnGrp Delay(d),s/veh	59.2	2.9	3.1	36.4	3.8	0.0	36.6	0.0	42.0			
LnGrp LOS	E	A	A	D	A		D		D			
Approach Vol, veh/h		984			1541			24				
Approach Delay, s/veh		3.6			4.7			40.9				
Approach LOS		A			A			D				

Timer	1	2	3	4	5	6	7	8
Assigned Phs	1	2			5	6		8
Phs Duration (G+Y+Rc), s	6.9	62.2			4.8	64.3		6.0
Change Period (Y+Rc), s	4.4	5.4			4.0	* 5.4		4.4
Max Green Setting (Gmax), s	4.6	25.8			4.0	* 26		31.0
Max Q Clear Time (g_c+I1), s	3.0	6.2			2.4	13.8		2.9
Green Ext Time (p_c), s	0.0	16.8			0.0	11.2		0.0

Intersection Summary	
HCM 2010 Ctrl Delay	4.6
HCM 2010 LOS	A

Notes

* HCM 2010 computational engine requires equal clearance times for the phases crossing the barrier.

Movement	EBL	EBT	EBR	WBL	WBT	WBR	NBL	NBT	NBR	SBL	SBT	SBR
Lane Configurations												
Volume (veh/h)	2	822	22	570	1390	2	8	0	55	34	0	1
Number	5	2	12	1	6	16	3	8	18	7	4	14
Initial Q (Qb), veh	0	0	0	0	0	0	0	0	0	0	0	0
Ped-Bike Adj(A_pbT)	1.00		1.00	1.00		1.00	0.98		1.00	1.00		0.98
Parking Bus, Adj	1.00	1.00	1.00	1.00	1.00	1.00	1.00	1.00	1.00	1.00	1.00	1.00
Adj Sat Flow, veh/h/ln	1863	1863	1900	1863	1863	1900	1863	1863	1863	1863	1863	1900
Adj Flow Rate, veh/h	2	856	23	594	1448	2	8	0	57	35	0	1
Adj No. of Lanes	1	3	0	2	3	0	1	0	2	1	1	0
Peak Hour Factor	0.96	0.96	0.96	0.96	0.96	0.96	0.96	0.96	0.96	0.96	0.96	0.96
Percent Heavy Veh, %	2	2	2	2	2	2	2	2	2	2	2	2
Cap, veh/h	4	3166	85	667	4266	6	137	0	168	136	0	83
Arrive On Green	0.00	0.62	0.62	0.19	0.81	0.81	0.05	0.00	0.05	0.05	0.00	0.05
Sat Flow, veh/h	1774	5092	137	3442	5244	7	1387	0	3167	1341	0	1557
Grp Volume(v), veh/h	2	570	309	594	936	514	8	0	57	35	0	1
Grp Sat Flow(s),veh/h/ln	1774	1695	1839	1721	1695	1861	1387	0	1583	1341	0	1557
Q Serve(g_s), s	0.1	8.6	8.6	18.8	8.0	8.0	0.6	0.0	1.9	2.8	0.0	0.1
Cycle Q Clear(g_c), s	0.1	8.6	8.6	18.8	8.0	8.0	0.7	0.0	1.9	2.8	0.0	0.1
Prop In Lane	1.00		0.07	1.00		0.00	1.00		1.00	1.00		1.00
Lane Grp Cap(c), veh/h	4	2108	1143	667	2758	1514	137	0	168	136	0	83
V/C Ratio(X)	0.52	0.27	0.27	0.89	0.34	0.34	0.06	0.00	0.34	0.26	0.00	0.01
Avail Cap(c_a), veh/h	73	2108	1143	910	2758	1514	436	0	851	425	0	418
HCM Platoon Ratio	1.00	1.00	1.00	1.00	1.00	1.00	1.00	1.00	1.00	1.00	1.00	1.00
Upstream Filter(I)	1.00	1.00	1.00	0.72	0.72	0.72	1.00	0.00	1.00	1.00	0.00	1.00
Uniform Delay (d), s/veh	55.8	9.6	9.6	44.0	2.7	2.7	50.6	0.0	51.1	51.5	0.0	50.2
Incr Delay (d2), s/veh	35.6	0.3	0.6	5.2	0.2	0.4	0.1	0.0	0.4	0.4	0.0	0.0
Initial Q Delay(d3),s/veh	0.0	0.0	0.0	0.0	0.0	0.0	0.0	0.0	0.0	0.0	0.0	0.0
%ile BackOfQ(50%),veh/ln	0.1	4.0	4.5	9.5	3.7	4.2	0.2	0.0	0.9	1.1	0.0	0.0
LnGrp Delay(d),s/veh	91.4	9.9	10.2	49.2	2.9	3.1	50.6	0.0	51.6	51.9	0.0	50.3
LnGrp LOS	F	A	B	D	A	A	D		D	D		D
Approach Vol, veh/h		881			2044			65			36	
Approach Delay, s/veh		10.2			16.4			51.4			51.9	
Approach LOS		B			B			D			D	

Timer	1	2	3	4	5	6	7	8
Assigned Phs	1	2		4	5	6		8
Phs Duration (G+Y+Rc), s	26.1	75.0		10.9	4.6	96.5		10.9
Change Period (Y+Rc), s	4.4	5.4		4.9	4.4	* 5.4		4.9
Max Green Setting (Gmax), s	29.6	37.6		30.1	4.6	* 63		30.1
Max Q Clear Time (g_c+I1), s	10.8	10.6		4.8	2.1	10.0		3.9
Green Ext Time (p_c), s	0.9	20.5		0.2	0.0	32.6		0.2

Intersection Summary	
HCM 2010 Ctrl Delay	15.8
HCM 2010 LOS	B

Notes

User approved volume balancing among the lanes for turning movement.

Movement	EBL	EBT	EBR	WBL	WBT	WBR	NBL	NBT	NBR	SBL	SBT	SBR
Lane Configurations												
Volume (veh/h)	73	818	491	822	1132	473	492	97	762	568	0	206
Number	5	2	12	1	6	16	3	8	18	7	4	14
Initial Q (Qb), veh	0	0	0	0	0	0	0	0	0	0	0	0
Ped-Bike Adj(A_pbT)	1.00		0.97	1.00		1.00	1.00		0.99	1.00		1.00
Parking Bus, Adj	1.00	1.00	1.00	1.00	1.00	1.00	1.00	1.00	1.00	1.00	1.00	1.00
Adj Sat Flow, veh/h/ln	1863	1863	1863	1863	1863	1863	1863	1863	1863	1863	0	1863
Adj Flow Rate, veh/h	80	899	540	903	1244	520	541	107	837	624	0	226
Adj No. of Lanes	1	4	1	2	3	2	2	1	2	2	0	1
Peak Hour Factor	0.91	0.91	0.91	0.91	0.91	0.91	0.91	0.91	0.91	0.91	0.91	0.91
Percent Heavy Veh, %	2	2	2	2	2	2	2	2	2	2	0	2
Cap, veh/h	171	1471	896	974	2129	1167	1180	204	1089	689	0	0
Arrive On Green	0.10	0.23	0.23	0.28	0.42	0.42	0.34	0.11	0.11	0.20	0.00	0.00
Sat Flow, veh/h	1774	6408	1539	3442	5085	2787	3442	1863	2748	3442	624	
Grp Volume(v), veh/h	80	899	540	903	1244	520	541	107	837	624	71.0	
Grp Sat Flow(s),veh/h/ln	1774	1602	1539	1721	1695	1393	1721	1863	1374	1721	E	
Q Serve(g_s), s	6.4	18.9	34.4	38.3	28.2	20.0	18.4	8.1	16.4	26.6		
Cycle Q Clear(g_c), s	6.4	18.9	34.4	38.3	28.2	20.0	18.4	8.1	16.4	26.6		
Prop In Lane	1.00		1.00	1.00		1.00	1.00		1.00	1.00		
Lane Grp Cap(c), veh/h	171	1471	896	974	2129	1167	1180	204	1089	689		
V/C Ratio(X)	0.47	0.61	0.60	0.93	0.58	0.45	0.46	0.53	0.77	0.91		
Avail Cap(c_a), veh/h	177	1471	896	1088	2129	1167	1180	204	1089	812		
HCM Platoon Ratio	1.00	1.00	1.00	1.00	1.00	1.00	1.00	1.00	1.00	1.00		
Upstream Filter(I)	0.97	0.97	0.97	0.56	0.56	0.56	1.00	1.00	1.00	1.00		
Uniform Delay (d), s/veh	64.1	51.8	21.1	52.3	33.6	31.2	38.4	63.1	39.8	58.6		
Incr Delay (d2), s/veh	1.9	0.7	1.1	7.8	0.7	0.7	0.3	2.5	3.4	12.4		
Initial Q Delay(d3),s/veh	0.0	0.0	0.0	0.0	0.0	0.0	0.0	0.0	0.0	0.0		
%ile BackOfQ(50%),veh/ln	3.2	8.4	15.0	19.2	13.4	7.8	8.8	4.3	15.6	13.8		
LnGrp Delay(d),s/veh	66.0	52.5	22.2	60.1	34.2	31.9	38.7	65.6	43.1	71.0		
LnGrp LOS	E	D	C	E	C	C	D	E	D	E		
Approach Vol, veh/h		1519			2667			1485				
Approach Delay, s/veh		42.5			42.5			43.1				
Approach LOS		D			D			D				

Timer	1	2	3	4	5	6	7	8
Assigned Phs	1	2	3		5	6	7	8
Phs Duration (G+Y+Rc), s	47.0	41.4	55.6		18.7	69.8	34.6	21.0
Change Period (Y+Rc), s	4.6	7.0	* 4.2		* 4.2	7.0	4.6	4.6
Max Green Setting (Gmax), s	47.4	30.0	* 31		* 15	62.8	35.4	16.4
Max Q Clear Time (g_c+I1), s	40.3	36.4	20.4		8.4	30.2	28.6	18.4
Green Ext Time (p_c), s	2.2	0.0	1.6		0.1	25.1	1.5	0.0

Intersection Summary	
HCM 2010 Ctrl Delay	45.5
HCM 2010 LOS	D

Notes

* HCM 2010 computational engine requires equal clearance times for the phases crossing the barrier.

Movement	EBL	EBT	WBT	WBR	SBL	SBR
Lane Configurations						
Volume (veh/h)	689	1459	1108	1048	1114	1319
Number	5	2	6	16	7	14
Initial Q (Qb), veh	0	0	0	0	0	0
Ped-Bike Adj(A_pbT)	1.00			1.00	1.00	1.00
Parking Bus, Adj	1.00	1.00	1.00	1.00	1.00	1.00
Adj Sat Flow, veh/h/ln	1863	1863	1863	1863	1863	1863
Adj Flow Rate, veh/h	733	1552	1179	0	1185	1403
Adj No. of Lanes	2	4	4	2	3	2
Peak Hour Factor	0.94	0.94	0.94	0.94	0.94	0.94
Percent Heavy Veh, %	2	2	2	2	2	2
Cap, veh/h	737	2723	1167	508	2537	1413
Arrive On Green	0.21	0.43	0.18	0.00	0.51	0.51
Sat Flow, veh/h	3442	6669	6669	2787	5003	2787
Grp Volume(v), veh/h	733	1552	1179	0	1185	1403
Grp Sat Flow(s),veh/h/ln	1721	1602	1602	1393	1668	1393
Q Serve(g_s), s	29.8	25.7	25.5	0.0	21.4	70.0
Cycle Q Clear(g_c), s	29.8	25.7	25.5	0.0	21.4	70.0
Prop In Lane	1.00			1.00	1.00	1.00
Lane Grp Cap(c), veh/h	737	2723	1167	508	2537	1413
V/C Ratio(X)	0.99	0.57	1.01	0.00	0.47	0.99
Avail Cap(c_a), veh/h	737	2723	1167	508	2537	1413
HCM Platoon Ratio	1.00	1.00	1.00	1.00	1.00	1.00
Upstream Filter(I)	0.66	0.66	1.00	0.00	1.00	1.00
Uniform Delay (d), s/veh	54.9	30.5	57.3	0.0	22.3	34.2
Incr Delay (d2), s/veh	25.3	0.6	28.9	0.0	0.1	22.1
Initial Q Delay(d3),s/veh	0.0	0.0	0.0	0.0	0.0	0.0
%ile BackOfQ(50%),veh/ln	16.7	11.4	13.6	0.0	9.9	44.9
LnGrp Delay(d),s/veh	80.3	31.1	86.1	0.0	22.4	56.4
LnGrp LOS	F	C	F		C	E
Approach Vol, veh/h		2285	1179		2588	
Approach Delay, s/veh		46.9	86.1		40.8	
Approach LOS		D	F		D	

Timer	1	2	3	4	5	6	7	8
Assigned Phs		2		4	5	6		
Phs Duration (G+Y+Rc), s		65.0		75.0	34.0	31.0		
Change Period (Y+Rc), s		5.5		4.0	4.0	5.5		
Max Green Setting (Gmax), s		59.5		71.0	30.0	25.5		
Max Q Clear Time (g_c+I1), s		27.7		72.0	31.8	27.5		
Green Ext Time (p_c), s		24.0		0.0	0.0	0.0		

Intersection Summary	
HCM 2010 Ctrl Delay	51.9
HCM 2010 LOS	D

Movement	EBL	EBT	EBR	WBL	WBT	WBR	NBL	NBT	NBR	SBL	SBT	SBR
Lane Configurations												
Volume (veh/h)	246	265	421	245	156	433	342	1588	279	236	1536	418
Number	7	4	14	3	8	18	5	2	12	1	6	16
Initial Q (Qb), veh	0	0	0	0	0	0	0	0	0	0	0	0
Ped-Bike Adj(A_pbT)	1.00		0.97	1.00		0.98	1.00		1.00	1.00		0.99
Parking Bus, Adj	1.00	1.00	1.00	1.00	1.00	1.00	1.00	1.00	1.00	1.00	1.00	1.00
Adj Sat Flow, veh/h/ln	1863	1863	1863	1863	1863	1863	1863	1863	1900	1863	1863	1863
Adj Flow Rate, veh/h	259	279	443	258	164	456	360	1672	294	248	1617	440
Adj No. of Lanes	2	1	1	1	1	1	2	2	0	1	2	1
Peak Hour Factor	0.95	0.95	0.95	0.95	0.95	0.95	0.95	0.95	0.95	0.95	0.95	0.95
Percent Heavy Veh, %	2	2	2	2	2	2	2	2	2	2	2	2
Cap, veh/h	293	397	326	215	463	385	393	1324	226	166	1476	787
Arrive On Green	0.09	0.21	0.21	0.12	0.25	0.25	0.11	0.44	0.44	0.09	0.42	0.42
Sat Flow, veh/h	3442	1863	1529	1774	1863	1546	3442	3025	517	1774	3539	1563
Grp Volume(v), veh/h	259	279	443	258	164	456	360	958	1008	248	1617	440
Grp Sat Flow(s),veh/h/ln	1721	1863	1529	1774	1863	1546	1721	1770	1772	1774	1770	1563
Q Serve(g_s), s	10.8	20.2	31.0	17.6	10.6	36.2	15.1	63.7	63.7	13.6	60.7	28.4
Cycle Q Clear(g_c), s	10.8	20.2	31.0	17.6	10.6	36.2	15.1	63.7	63.7	13.6	60.7	28.4
Prop In Lane	1.00		1.00	1.00		1.00	1.00		0.29	1.00		1.00
Lane Grp Cap(c), veh/h	293	397	326	215	463	385	393	775	776	166	1476	787
V/C Ratio(X)	0.88	0.70	1.36	1.20	0.35	1.19	0.92	1.24	1.30	1.50	1.10	0.56
Avail Cap(c_a), veh/h	293	397	326	215	463	385	393	775	776	166	1476	787
HCM Platoon Ratio	1.00	1.00	1.00	1.00	1.00	1.00	1.00	1.00	1.00	1.00	1.00	1.00
Upstream Filter(I)	1.00	1.00	1.00	1.00	1.00	1.00	1.00	1.00	1.00	1.00	1.00	1.00
Uniform Delay (d), s/veh	65.8	53.0	57.3	64.0	45.0	54.7	63.8	40.9	40.9	65.9	42.4	25.1
Incr Delay (d2), s/veh	24.7	5.5	180.5	126.8	0.2	106.9	25.5	117.3	144.4	252.0	54.0	1.1
Initial Q Delay(d3),s/veh	0.0	0.0	0.0	0.0	0.0	0.0	0.0	0.0	0.0	0.0	0.0	0.0
%ile BackOfQ(50%),veh/ln	6.2	11.0	29.4	16.1	5.4	26.8	8.5	56.2	62.1	18.2	40.6	12.4
LnGrp Delay(d),s/veh	90.6	58.5	237.7	190.8	45.2	161.5	89.2	158.2	185.3	318.0	96.4	26.2
LnGrp LOS	F	E	F	F	D	F	F	F	F	F	F	C
Approach Vol, veh/h		981			878			2326			2305	
Approach Delay, s/veh		147.9			148.4			159.3			106.8	
Approach LOS		F			F			F			F	

Timer	1	2	3	4	5	6	7	8
Assigned Phs	1	2	3	4	5	6	7	8
Phs Duration (G+Y+Rc), s	18.0	69.0	22.0	36.5	21.0	66.0	16.8	41.7
Change Period (Y+Rc), s	4.4	5.3	4.4	* 5.5	4.4	* 5.3	4.4	5.5
Max Green Setting (Gmax), s	13.6	63.6	17.6	* 31	16.6	* 61	12.4	35.8
Max Q Clear Time (g_c+I1), s	15.6	65.7	19.6	33.0	17.1	62.7	12.8	38.2
Green Ext Time (p_c), s	0.0	0.0	0.0	0.0	0.0	0.0	0.0	0.0

Intersection Summary	
HCM 2010 Ctrl Delay	137.4
HCM 2010 LOS	F

Notes

* HCM 2010 computational engine requires equal clearance times for the phases crossing the barrier.

Movement	EBL	EBT	EBR	WBL	WBT	WBR	NBL	NBT	NBR	SBL	SBT	SBR
Lane Configurations												
Volume (veh/h)	0	1574	693	400	454	0	0	0	0	429	1	1736
Number	5	2	12	1	6	16				7	4	14
Initial Q (Qb), veh	0	0	0	0	0	0				0	0	0
Ped-Bike Adj(A_pbT)	1.00		1.00	1.00		1.00				1.00		1.00
Parking Bus, Adj	1.00	1.00	1.00	1.00	1.00	1.00				1.00	1.00	1.00
Adj Sat Flow, veh/h/ln	0	1863	1863	1863	1863	0				1900	1863	1863
Adj Flow Rate, veh/h	0	1640	722	417	473	0				447	1	0
Adj No. of Lanes	0	2	1	2	2	0				0	1	1
Peak Hour Factor	0.96	0.96	0.96	0.96	0.96	0.96				0.96	0.96	0.96
Percent Heavy Veh, %	0	2	2	2	2	0				2	2	2
Cap, veh/h	0	1561	698	451	2190	0				486	1	435
Arrive On Green	0.00	0.44	0.44	0.13	0.62	0.00				0.27	0.27	0.00
Sat Flow, veh/h	0	3632	1583	3442	3632	0				1770	4	1583
Grp Volume(v), veh/h	0	1640	722	417	473	0				448	0	0
Grp Sat Flow(s),veh/h/ln	0	1770	1583	1721	1770	0				1774	0	1583
Q Serve(g_s), s	0.0	39.7	39.7	10.8	5.3	0.0				22.1	0.0	0.0
Cycle Q Clear(g_c), s	0.0	39.7	39.7	10.8	5.3	0.0				22.1	0.0	0.0
Prop In Lane	0.00		1.00	1.00		0.00				1.00		1.00
Lane Grp Cap(c), veh/h	0	1561	698	451	2190	0				487	0	435
V/C Ratio(X)	0.00	1.05	1.03	0.92	0.22	0.00				0.92	0.00	0.00
Avail Cap(c_a), veh/h	0	1561	698	451	2190	0				520	0	464
HCM Platoon Ratio	1.00	1.00	1.00	1.00	1.00	1.00				1.00	1.00	1.00
Upstream Filter(I)	0.00	1.00	1.00	0.09	0.09	0.00				1.00	0.00	0.00
Uniform Delay (d), s/veh	0.0	25.2	25.2	38.7	7.6	0.0				31.7	0.0	0.0
Incr Delay (d2), s/veh	0.0	37.5	43.2	3.5	0.0	0.0				20.9	0.0	0.0
Initial Q Delay(d3),s/veh	0.0	0.0	0.0	0.0	0.0	0.0				0.0	0.0	0.0
%ile BackOfQ(50%),veh/ln	0.0	27.4	25.6	5.3	2.6	0.0				13.7	0.0	0.0
LnGrp Delay(d),s/veh	0.0	62.6	68.3	42.2	7.6	0.0				52.6	0.0	0.0
LnGrp LOS		F	F	D	A					D		
Approach Vol, veh/h		2362			890						448	
Approach Delay, s/veh		64.4			23.8						52.6	
Approach LOS		E			C						D	

Timer	1	2	3	4	5	6	7	8
Assigned Phs	1	2		4		6		
Phs Duration (G+Y+Rc), s	16.0	44.7		29.3		60.7		
Change Period (Y+Rc), s	* 4.2	5.0		4.6		5.0		
Max Green Setting (Gmax), s	* 12	38.0		26.4		54.0		
Max Q Clear Time (g_c+I1), s	12.8	41.7		24.1		7.3		
Green Ext Time (p_c), s	0.0	0.0		0.7		33.8		

Intersection Summary	
HCM 2010 Ctrl Delay	53.2
HCM 2010 LOS	D

Notes

* HCM 2010 computational engine requires equal clearance times for the phases crossing the barrier.

Movement	EBL	EBT	EBR	WBL	WBT	WBR	NBL	NBT	NBR	SBL	SBT	SBR
Lane Configurations												
Volume (veh/h)	1207	796	0	0	451	698	403	0	659	0	0	0
Number	5	2	12	1	6	16	7	4	14			
Initial Q (Qb), veh	0	0	0	0	0	0	0	0	0			
Ped-Bike Adj(A_pbT)	1.00		1.00	1.00		0.97	1.00		1.00			
Parking Bus, Adj	1.00	1.00	1.00	1.00	1.00	1.00	1.00	1.00	1.00			
Adj Sat Flow, veh/h/ln	1863	1863	0	0	1863	1900	1900	1863	1863			
Adj Flow Rate, veh/h	1298	856	0	0	485	751	433	0	709			
Adj No. of Lanes	2	2	0	0	2	0	0	1	1			
Peak Hour Factor	0.93	0.93	0.93	0.93	0.93	0.93	0.93	0.93	0.93			
Percent Heavy Veh, %	2	2	0	0	2	2	2	2	2			
Cap, veh/h	1060	2247	0	0	504	439	468	0	418			
Arrive On Green	0.31	0.63	0.00	0.00	0.28	0.28	0.26	0.00	0.26			
Sat Flow, veh/h	3442	3632	0	0	1863	1539	1774	0	1583			
Grp Volume(v), veh/h	1298	856	0	0	485	751	433	0	709			
Grp Sat Flow(s),veh/h/ln	1721	1770	0	0	1770	1539	1774	0	1583			
Q Serve(g_s), s	30.8	11.6	0.0	0.0	27.0	28.5	23.8	0.0	26.4			
Cycle Q Clear(g_c), s	30.8	11.6	0.0	0.0	27.0	28.5	23.8	0.0	26.4			
Prop In Lane	1.00		0.00	0.00		1.00	1.00		1.00			
Lane Grp Cap(c), veh/h	1060	2247	0	0	504	439	468	0	418			
V/C Ratio(X)	1.22	0.38	0.00	0.00	0.96	1.71	0.92	0.00	1.70			
Avail Cap(c_a), veh/h	1060	2247	0	0	504	439	468	0	418			
HCM Platoon Ratio	1.00	1.00	1.00	1.00	1.00	1.00	1.00	1.00	1.00			
Upstream Filter(I)	0.09	0.09	0.00	0.00	0.68	0.68	1.00	0.00	1.00			
Uniform Delay (d), s/veh	34.6	8.8	0.0	0.0	35.2	35.8	35.8	0.0	36.8			
Incr Delay (d2), s/veh	101.9	0.0	0.0	0.0	24.9	327.1	24.2	0.0	323.4			
Initial Q Delay(d3),s/veh	0.0	0.0	0.0	0.0	0.0	0.0	0.0	0.0	0.0			
%ile BackOfQ(50%),veh/ln	29.6	5.6	0.0	0.0	16.7	51.9	14.8	0.0	57.6			
LnGrp Delay(d),s/veh	136.5	8.8	0.0	0.0	60.1	362.9	60.1	0.0	360.2			
LnGrp LOS	F	A			E	F	E		F			
Approach Vol, veh/h		2154			1236			1142				
Approach Delay, s/veh		85.7			244.1			246.4				
Approach LOS		F			F			F				

Timer	1	2	3	4	5	6	7	8
Assigned Phs		2		4	5	6		
Phs Duration (G+Y+Rc), s		69.0		31.0	35.0	34.0		
Change Period (Y+Rc), s		5.5		4.6	* 4.2	5.5		
Max Green Setting (Gmax), s		63.5		26.4	* 31	28.5		
Max Q Clear Time (g_c+I1), s		13.6		28.4	32.8	30.5		
Green Ext Time (p_c), s		26.8		0.0	0.0	0.0		

Intersection Summary	
HCM 2010 Ctrl Delay	169.4
HCM 2010 LOS	F

Notes

* HCM 2010 computational engine requires equal clearance times for the phases crossing the barrier.

Movement	EBL	EBT	EBR	WBL	WBT	WBR	NBL	NBT	NBR	SBL	SBT	SBR
Lane Configurations												
Volume (veh/h)	639	58	758	29	70	32	647	257	22	18	232	432
Number	5	2	12	1	6	16	3	8	18	7	4	14
Initial Q (Qb), veh	0	0	0	0	0	0	0	0	0	0	0	0
Ped-Bike Adj(A_pbT)	1.00		1.00	1.00		1.00	1.00		1.00	1.00		1.00
Parking Bus, Adj	1.00	1.00	1.00	1.00	1.00	1.00	1.00	1.00	1.00	1.00	1.00	1.00
Adj Sat Flow, veh/h/ln	1863	1863	1863	1863	1863	1900	1863	1863	1900	1900	1863	1863
Adj Flow Rate, veh/h	702	64	833	32	77	35	711	282	24	20	405	375
Adj No. of Lanes	2	1	1	1	2	0	2	1	0	0	1	1
Peak Hour Factor	0.91	0.91	0.91	0.91	0.91	0.91	0.91	0.91	0.91	0.91	0.91	0.91
Percent Heavy Veh, %	2	2	2	2	2	2	2	2	2	2	2	2
Cap, veh/h	963	521	811	116	157	68	825	394	34	21	420	376
Arrive On Green	0.28	0.28	0.28	0.07	0.07	0.07	0.23	0.23	0.23	0.24	0.24	0.24
Sat Flow, veh/h	3442	1863	1583	1774	2414	1036	3548	1693	144	87	1771	1583
Grp Volume(v), veh/h	702	64	833	32	55	57	711	0	306	425	0	375
Grp Sat Flow(s),veh/h/ln	1721	1863	1583	1774	1770	1680	1774	0	1837	1858	0	1583
Q Serve(g_s), s	19.5	2.7	29.6	1.8	3.2	3.5	20.3	0.0	16.2	23.9	0.0	25.0
Cycle Q Clear(g_c), s	19.5	2.7	29.6	1.8	3.2	3.5	20.3	0.0	16.2	23.9	0.0	25.0
Prop In Lane	1.00		1.00	1.00		0.62	1.00		0.08	0.05		1.00
Lane Grp Cap(c), veh/h	963	521	811	116	115	110	825	0	427	441	0	376
V/C Ratio(X)	0.73	0.12	1.03	0.28	0.48	0.52	0.86	0.00	0.72	0.96	0.00	1.00
Avail Cap(c_a), veh/h	963	521	811	302	301	286	929	0	481	441	0	376
HCM Platoon Ratio	1.00	1.00	1.00	1.00	1.00	1.00	1.00	1.00	1.00	1.00	1.00	1.00
Upstream Filter(I)	1.00	1.00	1.00	1.00	1.00	1.00	1.00	0.00	1.00	1.00	0.00	1.00
Uniform Delay (d), s/veh	34.5	28.4	19.8	47.1	47.7	47.8	39.0	0.0	37.4	39.9	0.0	40.3
Incr Delay (d2), s/veh	3.4	0.2	38.7	1.3	3.1	3.8	7.7	0.0	4.4	33.6	0.0	46.0
Initial Q Delay(d3),s/veh	0.0	0.0	0.0	0.0	0.0	0.0	0.0	0.0	0.0	0.0	0.0	0.0
%ile BackOfQ(50%),veh/ln	9.7	1.4	32.1	0.9	1.7	1.7	10.9	0.0	8.8	16.4	0.0	15.6
LnGrp Delay(d),s/veh	37.8	28.6	58.5	48.4	50.8	51.6	46.6	0.0	41.8	73.5	0.0	86.3
LnGrp LOS	D	C	F	D	D	D	D		D	E		F
Approach Vol, veh/h		1599			144			1017			800	
Approach Delay, s/veh		48.2			50.6			45.2			79.5	
Approach LOS		D			D			D			E	

Timer	1	2	3	4	5	6	7	8
Assigned Phs		2		4		6		8
Phs Duration (G+Y+Rc), s		34.5		30.0		11.8		29.5
Change Period (Y+Rc), s		4.9		4.9		4.9		4.9
Max Green Setting (Gmax), s		29.6		25.1		18.0		27.7
Max Q Clear Time (g_c+I1), s		31.6		27.0		5.5		22.3
Green Ext Time (p_c), s		0.0		0.0		0.5		2.3

Intersection Summary	
HCM 2010 Ctrl Delay	54.5
HCM 2010 LOS	D

Notes

User approved volume balancing among the lanes for turning movement.

Movement	EBL	EBT	EBR	WBL	WBT	WBR	NBL	NBT	NBR	SBL	SBT	SBR
Lane Configurations												
Volume (veh/h)	61	7	32	124	10	46	28	657	69	24	714	46
Number	7	4	14	3	8	18	5	2	12	1	6	16
Initial Q (Qb), veh	0	0	0	0	0	0	0	0	0	0	0	0
Ped-Bike Adj(A_pbT)	1.00		1.00	1.00		1.00	1.00		1.00	1.00		1.00
Parking Bus, Adj	1.00	1.00	1.00	1.00	1.00	1.00	1.00	1.00	1.00	1.00	1.00	1.00
Adj Sat Flow, veh/h/ln	1900	1863	1900	1900	1863	1900	1863	1863	1900	1863	1863	1900
Adj Flow Rate, veh/h	66	8	35	135	11	50	30	714	75	26	776	51
Adj No. of Lanes	0	1	0	0	1	0	1	1	0	1	1	0
Peak Hour Factor	0.92	0.92	0.92	0.92	0.92	0.92	0.92	0.92	0.92	0.92	0.92	0.91
Percent Heavy Veh, %	2	2	2	2	2	2	2	2	2	2	2	2
Cap, veh/h	189	32	77	221	16	60	40	1108	116	36	1152	76
Arrive On Green	0.16	0.16	0.16	0.16	0.16	0.16	0.02	0.67	0.67	0.02	0.67	0.67
Sat Flow, veh/h	821	197	482	999	100	376	1774	1658	174	1774	1729	114
Grp Volume(v), veh/h	109	0	0	196	0	0	30	0	789	26	0	827
Grp Sat Flow(s),veh/h/ln	1500	0	0	1474	0	0	1774	0	1832	1774	0	1843
Q Serve(g_s), s	0.0	0.0	0.0	6.4	0.0	0.0	1.7	0.0	25.1	1.5	0.0	27.2
Cycle Q Clear(g_c), s	6.4	0.0	0.0	12.8	0.0	0.0	1.7	0.0	25.1	1.5	0.0	27.2
Prop In Lane	0.61		0.32	0.69		0.26	1.00		0.10	1.00		0.06
Lane Grp Cap(c), veh/h	298	0	0	297	0	0	40	0	1225	36	0	1228
V/C Ratio(X)	0.37	0.00	0.00	0.66	0.00	0.00	0.75	0.00	0.64	0.71	0.00	0.67
Avail Cap(c_a), veh/h	659	0	0	656	0	0	75	0	1225	75	0	1228
HCM Platoon Ratio	1.00	1.00	1.00	1.00	1.00	1.00	1.00	1.00	1.00	1.00	1.00	1.00
Upstream Filter(I)	1.00	0.00	0.00	1.00	0.00	0.00	1.00	0.00	1.00	1.00	0.00	1.00
Uniform Delay (d), s/veh	37.9	0.0	0.0	40.5	0.0	0.0	48.6	0.0	9.6	48.7	0.0	10.1
Incr Delay (d2), s/veh	0.3	0.0	0.0	0.9	0.0	0.0	9.8	0.0	2.6	9.2	0.0	3.0
Initial Q Delay(d3),s/veh	0.0	0.0	0.0	0.0	0.0	0.0	0.0	0.0	0.0	0.0	0.0	0.0
%ile BackOfQ(50%),veh/ln	2.7	0.0	0.0	5.3	0.0	0.0	0.9	0.0	13.4	0.8	0.0	14.6
LnGrp Delay(d),s/veh	38.2	0.0	0.0	41.5	0.0	0.0	58.4	0.0	12.3	57.8	0.0	13.1
LnGrp LOS	D			D			E		B	E		B
Approach Vol, veh/h		109			196			819			853	
Approach Delay, s/veh		38.2			41.5			14.0			14.4	
Approach LOS		D			D			B			B	

Timer	1	2	3	4	5	6	7	8
Assigned Phs	1	2		4	5	6		8
Phs Duration (G+Y+Rc), s	6.5	72.7		20.9	6.7	72.4		20.9
Change Period (Y+Rc), s	4.4	* 5.8		4.9	4.4	5.8		4.9
Max Green Setting (Gmax), s	4.3	* 40		41.1	4.2	39.6		41.1
Max Q Clear Time (g_c+I1), s	3.5	27.1		8.4	3.7	29.2		14.8
Green Ext Time (p_c), s	0.0	10.1		1.3	0.0	8.5		1.2

Intersection Summary	
HCM 2010 Ctrl Delay	18.2
HCM 2010 LOS	B

Notes

* HCM 2010 computational engine requires equal clearance times for the phases crossing the barrier.

Movement	NBT	NBR	SBL	SBT	SWL	SWR
Lane Configurations						
Volume (veh/h)	579	865	0	788	918	19
Number	2	12	1	6	3	18
Initial Q (Qb), veh	0	0	0	0	0	0
Ped-Bike Adj(A_pbT)		1.00	1.00		1.00	1.00
Parking Bus, Adj	1.00	1.00	1.00	1.00	1.00	1.00
Adj Sat Flow, veh/h/ln	1863	1900	0	1863	1863	1900
Adj Flow Rate, veh/h	629	940	0	857	1018	0
Adj No. of Lanes	2	0	0	2	2	1
Peak Hour Factor	0.92	0.92	0.92	0.92	0.92	0.92
Percent Heavy Veh, %	2	2	0	2	2	0
Cap, veh/h	907	811	0	1813	1175	535
Arrive On Green	0.51	0.51	0.00	0.51	0.33	0.00
Sat Flow, veh/h	1863	1583	0	3725	3548	1615
Grp Volume(v), veh/h	629	940	0	857	1018	0
Grp Sat Flow(s),veh/h/ln	1770	1583	0	1770	1774	1615
Q Serve(g_s), s	18.4	35.0	0.0	10.6	18.4	0.0
Cycle Q Clear(g_c), s	18.4	35.0	0.0	10.6	18.4	0.0
Prop In Lane		1.00	0.00		1.00	1.00
Lane Grp Cap(c), veh/h	907	811	0	1813	1175	535
V/C Ratio(X)	0.69	1.16	0.00	0.47	0.87	0.00
Avail Cap(c_a), veh/h	907	811	0	1813	1355	617
HCM Platoon Ratio	1.00	1.00	1.00	1.00	1.00	1.00
Upstream Filter(I)	1.00	1.00	0.00	1.00	1.00	0.00
Uniform Delay (d), s/veh	12.6	16.7	0.0	10.7	21.4	0.0
Incr Delay (d2), s/veh	4.4	85.1	0.0	0.9	5.6	0.0
Initial Q Delay(d3),s/veh	0.0	0.0	0.0	0.0	0.0	0.0
%ile BackOfQ(50%),veh/ln	10.0	34.3	0.0	5.3	9.8	0.0
LnGrp Delay(d),s/veh	17.0	101.8	0.0	11.6	27.0	0.0
LnGrp LOS	B	F		B	C	
Approach Vol, veh/h	1569			857	1018	
Approach Delay, s/veh	67.8			11.6	27.0	
Approach LOS	E			B	C	

Timer	1	2	3	4	5	6	7	8
Assigned Phs		2				6		8
Phs Duration (G+Y+Rc), s		40.8				40.8		27.5
Change Period (Y+Rc), s		* 5.8				5.8		4.9
Max Green Setting (Gmax), s		* 35				23.2		26.1
Max Q Clear Time (g_c+I1), s		37.0				12.6		20.4
Green Ext Time (p_c), s		0.0				9.4		2.2

Intersection Summary	
HCM 2010 Ctrl Delay	41.7
HCM 2010 LOS	D

Notes

User approved volume balancing among the lanes for turning movement.

Movement	EBL	EBT	EBR	WBL	WBT	WBR	NBL	NBT	NBR	SBL	SBT	SBR
Lane Configurations												
Volume (veh/h)	43	39	187	19	14	804	82	454	20	918	795	38
Number	7	4	14	3	8	18	5	2	12	1	6	16
Initial Q (Qb), veh	0	0	0	0	0	0	0	0	0	0	0	0
Ped-Bike Adj(A_pbT)	1.00		1.00	1.00		1.00	1.00		1.00	1.00		1.00
Parking Bus, Adj	1.00	1.00	1.00	1.00	1.00	1.00	1.00	1.00	1.00	1.00	1.00	1.00
Adj Sat Flow, veh/h/ln	1863	1863	1900	1900	1863	1863	1863	1863	1900	1863	1863	1900
Adj Flow Rate, veh/h	44	40	191	0	0	850	84	463	20	937	811	39
Adj No. of Lanes	1	1	0	0	1	2	1	3	0	2	2	0
Peak Hour Factor	0.98	0.98	0.98	0.98	0.98	0.98	0.98	0.98	0.98	0.98	0.98	0.98
Percent Heavy Veh, %	2	2	2	2	2	2	2	2	2	2	2	2
Cap, veh/h	248	69	329	0	456	1551	108	1638	70	843	1759	85
Arrive On Green	0.24	0.24	0.24	0.00	0.00	0.24	0.06	0.33	0.33	0.25	0.51	0.51
Sat Flow, veh/h	646	281	1344	0	1863	3167	1774	5000	215	3442	3438	165
Grp Volume(v), veh/h	44	0	231	0	0	850	84	313	170	937	417	433
Grp Sat Flow(s),veh/h/ln	646	0	1626	0	1863	1583	1774	1695	1825	1721	1770	1834
Q Serve(g_s), s	4.4	0.0	10.0	0.0	0.0	15.0	3.7	5.5	5.5	19.6	12.1	12.1
Cycle Q Clear(g_c), s	4.4	0.0	10.0	0.0	0.0	15.0	3.7	5.5	5.5	19.6	12.1	12.1
Prop In Lane	1.00		0.83	0.00		1.00	1.00		0.12	1.00		0.09
Lane Grp Cap(c), veh/h	248	0	398	0	456	1551	108	1111	598	843	906	938
V/C Ratio(X)	0.18	0.00	0.58	0.00	0.00	0.55	0.78	0.28	0.28	1.11	0.46	0.46
Avail Cap(c_a), veh/h	300	0	528	0	605	1805	208	1111	598	843	906	938
HCM Platoon Ratio	1.00	1.00	1.00	1.00	1.00	1.00	1.00	1.00	1.00	1.00	1.00	1.00
Upstream Filter(I)	1.00	0.00	1.00	0.00	0.00	0.57	1.00	1.00	1.00	1.00	1.00	1.00
Uniform Delay (d), s/veh	24.5	0.0	26.6	0.0	0.0	14.2	37.0	19.9	19.9	30.2	12.5	12.5
Incr Delay (d2), s/veh	0.1	0.0	0.5	0.0	0.0	0.1	4.5	0.6	1.2	66.2	1.7	1.6
Initial Q Delay(d3),s/veh	0.0	0.0	0.0	0.0	0.0	0.0	0.0	0.0	0.0	0.0	0.0	0.0
%ile BackOfQ(50%),veh/ln	0.8	0.0	4.5	0.0	0.0	6.5	2.0	2.7	3.0	17.0	6.2	6.4
LnGrp Delay(d),s/veh	24.6	0.0	27.1	0.0	0.0	14.3	41.5	20.6	21.1	96.4	14.2	14.1
LnGrp LOS	C		C			B	D	C	C	F	B	B
Approach Vol, veh/h		275			850			567			1787	
Approach Delay, s/veh		26.7			14.3			23.8			57.3	
Approach LOS		C			B			C			E	

Timer	1	2	3	4	5	6	7	8
Assigned Phs	1	2		4	5	6		8
Phs Duration (G+Y+Rc), s	24.0	31.5		24.5	9.3	46.2		24.5
Change Period (Y+Rc), s	4.4	* 5.3		4.9	4.4	5.3		4.9
Max Green Setting (Gmax), s	19.6	* 20		26.0	9.4	30.0		26.0
Max Q Clear Time (g_c+I1), s	21.6	7.5		12.0	5.7	14.1		17.0
Green Ext Time (p_c), s	0.0	6.4		3.1	0.0	7.4		2.6

Intersection Summary	
HCM 2010 Ctrl Delay	38.9
HCM 2010 LOS	D

Notes

User approved volume balancing among the lanes for turning movement.

Movement	WBL	WBR	NBT	NBR	SBL	SBT
Lane Configurations						
Volume (veh/h)	1251	10	605	1183	0	986
Number	3	18	2	12	1	6
Initial Q (Qb), veh	0	0	0	0	0	0
Ped-Bike Adj(A_pbT)	1.00	1.00		1.00	1.00	
Parking Bus, Adj	1.00	1.00	1.00	1.00	1.00	1.00
Adj Sat Flow, veh/h/ln	1863	1900	1863	1863	0	1863
Adj Flow Rate, veh/h	1312	0	630	0	0	1027
Adj No. of Lanes	2	1	2	1	0	2
Peak Hour Factor	0.96	0.96	0.96	0.96	0.96	0.96
Percent Heavy Veh, %	2	0	2	2	0	2
Cap, veh/h	1417	645	1288	576	0	1288
Arrive On Green	0.40	0.00	0.36	0.00	0.00	0.36
Sat Flow, veh/h	3548	1615	3632	1583	0	3725
Grp Volume(v), veh/h	1312	0	630	0	0	1027
Grp Sat Flow(s),veh/h/ln	1774	1615	1770	1583	0	1770
Q Serve(g_s), s	21.1	0.0	8.3	0.0	0.0	15.6
Cycle Q Clear(g_c), s	21.1	0.0	8.3	0.0	0.0	15.6
Prop In Lane	1.00	1.00		1.00	0.00	
Lane Grp Cap(c), veh/h	1417	645	1288	576	0	1288
V/C Ratio(X)	0.93	0.00	0.49	0.00	0.00	0.80
Avail Cap(c_a), veh/h	1437	654	1288	576	0	1288
HCM Platoon Ratio	1.00	1.00	1.00	1.00	1.00	1.00
Upstream Filter(I)	1.00	0.00	1.00	0.00	0.00	1.00
Uniform Delay (d), s/veh	17.2	0.0	14.8	0.0	0.0	17.1
Incr Delay (d2), s/veh	10.6	0.0	1.3	0.0	0.0	5.2
Initial Q Delay(d3),s/veh	0.0	0.0	0.0	0.0	0.0	0.0
%ile BackOfQ(50%),veh/ln	12.3	0.0	4.3	0.0	0.0	8.5
LnGrp Delay(d),s/veh	27.7	0.0	16.1	0.0	0.0	22.3
LnGrp LOS	C		B			C
Approach Vol, veh/h	1312		630			1027
Approach Delay, s/veh	27.7		16.1			22.3
Approach LOS	C		B			C

Timer	1	2	3	4	5	6	7	8
Assigned Phs		2				6		8
Phs Duration (G+Y+Rc), s		27.3				27.3		32.7
Change Period (Y+Rc), s		5.5				* 5.5		8.7
Max Green Setting (Gmax), s		21.5				* 22		24.3
Max Q Clear Time (g_c+I1), s		10.3				17.6		23.1
Green Ext Time (p_c), s		9.3				3.7		0.8

Intersection Summary	
HCM 2010 Ctrl Delay	23.4
HCM 2010 LOS	C

Notes

User approved volume balancing among the lanes for turning movement.

Movement	EBL	EBT	EBR	WBL	WBT	WBR	NBL	NBT	NBR	SBL	SBT	SBR
Lane Configurations												
Volume (veh/h)	567	309	31	306	224	153	47	883	291	245	942	495
Number	7	4	14	3	8	18	5	2	12	1	6	16
Initial Q (Qb), veh	0	0	0	0	0	0	0	0	0	0	0	0
Ped-Bike Adj(A_pbT)	1.00		1.00	1.00		1.00	1.00		1.00	1.00		1.00
Parking Bus, Adj	1.00	1.00	1.00	1.00	1.00	1.00	1.00	1.00	1.00	1.00	1.00	1.00
Adj Sat Flow, veh/h/ln	1863	1863	1900	1863	1863	1863	1863	1863	1900	1863	1863	1900
Adj Flow Rate, veh/h	482	498	33	326	238	163	50	939	310	261	1002	527
Adj No. of Lanes	1	1	0	2	1	1	1	2	0	1	2	0
Peak Hour Factor	0.94	0.94	0.94	0.94	0.94	0.94	0.94	0.94	0.94	0.94	0.94	0.94
Percent Heavy Veh, %	2	2	2	2	2	2	2	2	2	2	2	2
Cap, veh/h	457	446	30	519	272	231	64	865	284	223	952	487
Arrive On Green	0.26	0.26	0.26	0.15	0.15	0.15	0.04	0.33	0.33	0.13	0.42	0.42
Sat Flow, veh/h	1774	1728	115	3548	1863	1583	1774	2619	861	1774	2268	1160
Grp Volume(v), veh/h	482	0	531	326	238	163	50	633	616	261	775	754
Grp Sat Flow(s),veh/h/ln	1774	0	1843	1774	1863	1583	1774	1770	1711	1774	1770	1658
Q Serve(g_s), s	36.1	0.0	36.1	12.1	17.5	13.7	3.9	46.2	46.2	17.6	58.8	58.8
Cycle Q Clear(g_c), s	36.1	0.0	36.1	12.1	17.5	13.7	3.9	46.2	46.2	17.6	58.8	58.8
Prop In Lane	1.00		0.06	1.00		1.00	1.00		0.50	1.00		0.70
Lane Grp Cap(c), veh/h	457	0	475	519	272	231	64	584	565	223	743	696
V/C Ratio(X)	1.05	0.00	1.12	0.63	0.87	0.70	0.78	1.08	1.09	1.17	1.04	1.08
Avail Cap(c_a), veh/h	457	0	475	611	321	273	66	584	565	223	743	696
HCM Platoon Ratio	1.00	1.00	1.00	1.00	1.00	1.00	1.00	1.00	1.00	1.00	1.00	1.00
Upstream Filter(I)	0.63	0.00	0.63	1.00	1.00	1.00	1.00	1.00	1.00	1.00	1.00	1.00
Uniform Delay (d), s/veh	52.0	0.0	52.0	56.2	58.5	56.9	66.9	46.9	46.9	61.2	40.6	40.6
Incr Delay (d2), s/veh	48.4	0.0	70.0	0.8	18.2	4.7	39.3	61.7	64.8	113.9	45.0	58.7
Initial Q Delay(d3),s/veh	0.0	0.0	0.0	0.0	0.0	0.0	0.0	0.0	0.0	0.0	0.0	0.0
%ile BackOfQ(50%),veh/ln	23.8	0.0	27.6	6.0	10.4	6.3	2.6	32.6	32.0	15.7	38.0	38.2
LnGrp Delay(d),s/veh	100.3	0.0	122.0	57.0	76.8	61.5	106.2	108.6	111.6	175.1	85.6	99.3
LnGrp LOS	F		F	E	E	E	F	F	F	F	F	F
Approach Vol, veh/h		1013			727			1299			1790	
Approach Delay, s/veh		111.7			64.5			110.0			104.4	
Approach LOS		F			E			F			F	

Timer	1	2	3	4	5	6	7	8
Assigned Phs	1	2		4	5	6		8
Phs Duration (G+Y+Rc), s	22.0	51.6		41.0	9.5	64.2		25.4
Change Period (Y+Rc), s	4.4	* 5.4		4.9	4.4	5.4		4.9
Max Green Setting (Gmax), s	17.6	* 43		36.1	5.2	55.0		24.1
Max Q Clear Time (g_c+I1), s	19.6	48.2		38.1	5.9	60.8		19.5
Green Ext Time (p_c), s	0.0	0.0		0.0	0.0	0.0		1.0

Intersection Summary	
HCM 2010 Ctrl Delay	101.4
HCM 2010 LOS	F

Notes

User approved volume balancing among the lanes for turning movement.

Movement	EBL	EBT	EBR	WBL	WBT	WBR	NBL	NBT	NBR	SBL	SBT	SBR
Lane Configurations												
Volume (veh/h)	496	756	113	6	506	92	81	15	12	228	36	838
Number	5	2	12	1	6	16	3	8	18	7	4	14
Initial Q (Qb), veh	0	0	0	0	0	0	0	0	0	0	0	0
Ped-Bike Adj(A_pbT)	1.00		1.00	1.00		1.00	1.00		1.00	1.00		1.00
Parking Bus, Adj	1.00	1.00	1.00	1.00	1.00	1.00	1.00	1.00	1.00	1.00	1.00	1.00
Adj Sat Flow, veh/h/ln	1863	1863	1900	1863	1863	1900	1900	1863	1900	1900	1863	1863
Adj Flow Rate, veh/h	545	831	124	7	556	101	89	16	13	251	40	921
Adj No. of Lanes	1	2	0	1	2	0	0	1	0	0	1	1
Peak Hour Factor	0.91	0.91	0.91	0.91	0.91	0.91	0.91	0.91	0.91	0.91	0.91	0.91
Percent Heavy Veh, %	2	2	2	2	2	2	2	2	2	2	2	2
Cap, veh/h	526	1821	272	12	898	163	102	18	8	397	54	894
Arrive On Green	0.30	0.59	0.59	0.01	0.30	0.30	0.27	0.27	0.27	0.27	0.27	0.27
Sat Flow, veh/h	1774	3090	461	1774	2994	542	166	66	29	1254	200	1583
Grp Volume(v), veh/h	545	476	479	7	328	329	118	0	0	291	0	921
Grp Sat Flow(s),veh/h/ln	1774	1770	1781	1774	1770	1767	261	0	0	1454	0	1583
Q Serve(g_s), s	32.6	16.6	16.6	0.4	17.5	17.6	9.4	0.0	0.0	0.0	0.0	29.5
Cycle Q Clear(g_c), s	32.6	16.6	16.6	0.4	17.5	17.6	29.5	0.0	0.0	20.1	0.0	29.5
Prop In Lane	1.00		0.26	1.00		0.31	0.75		0.11	0.86		1.00
Lane Grp Cap(c), veh/h	526	1043	1050	12	531	530	127	0	0	451	0	894
V/C Ratio(X)	1.04	0.46	0.46	0.56	0.62	0.62	0.93	0.00	0.00	0.65	0.00	1.03
Avail Cap(c_a), veh/h	526	1043	1050	65	531	530	127	0	0	451	0	894
HCM Platoon Ratio	1.00	1.00	1.00	1.00	1.00	1.00	1.00	1.00	1.00	1.00	1.00	1.00
Upstream Filter(I)	1.00	1.00	1.00	1.00	1.00	1.00	1.00	0.00	0.00	1.00	0.00	1.00
Uniform Delay (d), s/veh	38.7	12.7	12.7	54.4	33.1	33.1	50.0	0.0	0.0	36.8	0.0	23.9
Incr Delay (d2), s/veh	49.0	1.4	1.4	14.0	5.3	5.4	56.7	0.0	0.0	2.5	0.0	38.1
Initial Q Delay(d3),s/veh	0.0	0.0	0.0	0.0	0.0	0.0	0.0	0.0	0.0	0.0	0.0	0.0
%ile BackOfQ(50%),veh/ln	23.1	8.5	8.5	0.3	9.3	9.4	5.6	0.0	0.0	8.4	0.0	36.3
LnGrp Delay(d),s/veh	87.7	14.1	14.1	68.5	38.4	38.5	106.6	0.0	0.0	39.3	0.0	62.1
LnGrp LOS	F	B	B	E	D	D	F			D		F
Approach Vol, veh/h		1500			664			118			1212	
Approach Delay, s/veh		40.9			38.8			106.6			56.6	
Approach LOS		D			D			F			E	

Timer	1	2	3	4	5	6	7	8
Assigned Phs	1	2		4	5	6		8
Phs Duration (G+Y+Rc), s	5.2	70.4		34.4	37.0	38.6		34.4
Change Period (Y+Rc), s	4.4	* 5.6		4.9	4.4	5.6		4.9
Max Green Setting (Gmax), s	4.6	* 62		29.5	32.6	33.0		29.5
Max Q Clear Time (g_c+I1), s	2.4	18.6		31.5	34.6	19.6		31.5
Green Ext Time (p_c), s	0.0	33.5		0.0	0.0	12.0		0.0

Intersection Summary	
HCM 2010 Ctrl Delay	48.2
HCM 2010 LOS	D

Notes

* HCM 2010 computational engine requires equal clearance times for the phases crossing the barrier.

Intersection	
Int Delay, s/veh	14.7

Movement	EBT	EBR	WBL	WBT	NBL	NBR
Vol, veh/h	1029	71	92	920	39	57
Conflicting Peds, #/hr	0	18	0	0	0	0
Sign Control	Free	Free	Free	Free	Stop	Stop
RT Channelized	-	None	-	None	-	None
Storage Length	-	-	100	-	0	-
Veh in Median Storage, #	0	-	-	0	0	-
Grade, %	0	-	-	0	0	-
Peak Hour Factor	84	84	84	84	84	84
Heavy Vehicles, %	2	2	2	2	2	2
Mvmt Flow	1225	85	110	1095	46	68

Major/Minor	Major1		Major2		Minor1	
Conflicting Flow All	0	0	1310	0	2034	655
Stage 1	-	-	-	-	1267	-
Stage 2	-	-	-	-	767	-
Critical Hdwy	-	-	4.14	-	6.84	6.94
Critical Hdwy Stg 1	-	-	-	-	5.84	-
Critical Hdwy Stg 2	-	-	-	-	5.84	-
Follow-up Hdwy	-	-	2.22	-	3.52	3.32
Pot Cap-1 Maneuver	-	-	524	-	49	409
Stage 1	-	-	-	-	228	-
Stage 2	-	-	-	-	419	-
Platoon blocked, %	-	-		-		
Mov Cap-1 Maneuver	-	-	524	-	~ 38	409
Mov Cap-2 Maneuver	-	-	-	-	~ 38	-
Stage 1	-	-	-	-	228	-
Stage 2	-	-	-	-	326	-

Approach	EB	WB	NB
HCM Control Delay, s	0	1.2	$ 325.6
HCM LOS			F

Minor Lane/Major Mvmt	NBLn1	EBT	EBR	WBL	WBT
Capacity (veh/h)	82	-	-	524	-
HCM Lane V/C Ratio	1.394	-	-	0.209	-
HCM Control Delay (s)	$ 325.6	-	-	13.7	-
HCM Lane LOS	F	-	-	B	-
HCM 95th %tile Q(veh)	8.9	-	-	0.8	-

Notes

~: Volume exceeds capacity $: Delay exceeds 300s +: Computation Not Defined *: All major volume in platoon

Movement	EBL	EBT	EBR	WBL	WBT	WBR	NBL	NBT	NBR	SBL	SBT	SBR
Lane Configurations												
Volume (veh/h)	262	954	78	49	809	254	52	49	45	404	22	343
Number	5	2	12	1	6	16	3	8	18	7	4	14
Initial Q (Qb), veh	0	0	0	0	0	0	0	0	0	0	0	0
Ped-Bike Adj(A_pbT)	1.00		0.97	1.00		0.98	1.00		0.98	1.00		0.91
Parking Bus, Adj	1.00	1.00	1.00	1.00	1.00	1.00	1.00	1.00	1.00	1.00	1.00	1.00
Adj Sat Flow, veh/h/ln	1863	1863	1900	1863	1863	1863	1863	1863	1900	1863	1863	1863
Adj Flow Rate, veh/h	282	1026	84	53	870	273	56	53	48	451	0	369
Adj No. of Lanes	1	2	0	1	2	1	1	1	0	2	0	1
Peak Hour Factor	0.93	0.93	0.93	0.93	0.93	0.93	0.93	0.93	0.93	0.93	0.93	0.93
Percent Heavy Veh, %	2	2	2	2	2	2	2	2	2	2	2	2
Cap, veh/h	268	1782	146	241	1233	931	140	70	64	871	0	353
Arrive On Green	0.30	1.00	1.00	0.46	0.46	0.46	0.08	0.08	0.08	0.25	0.00	0.25
Sat Flow, veh/h	1774	3305	270	505	3539	1557	1774	894	809	3548	0	1438
Grp Volume(v), veh/h	282	549	561	53	870	273	56	0	101	451	0	369
Grp Sat Flow(s),veh/h/ln	1774	1770	1806	505	1770	1557	1774	0	1703	1774	0	1438
Q Serve(g_s), s	16.6	0.0	0.0	7.2	21.6	8.4	3.3	0.0	6.4	12.1	0.0	27.0
Cycle Q Clear(g_c), s	16.6	0.0	0.0	7.2	21.6	8.4	3.3	0.0	6.4	12.1	0.0	27.0
Prop In Lane	1.00		0.15	1.00		1.00	1.00		0.48	1.00		1.00
Lane Grp Cap(c), veh/h	268	954	974	241	1233	931	140	0	134	871	0	353
V/C Ratio(X)	1.05	0.58	0.58	0.22	0.71	0.29	0.40	0.00	0.75	0.52	0.00	1.05
Avail Cap(c_a), veh/h	268	954	974	241	1233	931	258	0	248	871	0	353
HCM Platoon Ratio	2.00	2.00	2.00	1.33	1.33	1.33	1.00	1.00	1.00	1.00	1.00	1.00
Upstream Filter(I)	1.00	1.00	1.00	1.00	1.00	1.00	1.00	0.00	1.00	1.00	0.00	1.00
Uniform Delay (d), s/veh	38.4	0.0	0.0	21.2	25.0	8.9	48.2	0.0	49.6	35.9	0.0	41.5
Incr Delay (d2), s/veh	69.7	2.5	2.5	0.5	1.9	0.2	1.8	0.0	8.2	0.3	0.0	60.2
Initial Q Delay(d3),s/veh	0.0	0.0	0.0	0.0	0.0	0.0	0.0	0.0	0.0	0.0	0.0	0.0
%ile BackOfQ(50%),veh/ln	13.2	0.7	0.7	1.0	10.7	5.8	1.7	0.0	3.3	5.9	0.0	16.6
LnGrp Delay(d),s/veh	108.1	2.5	2.5	21.7	26.9	9.1	50.0	0.0	57.8	36.1	0.0	101.7
LnGrp LOS	F	A	A	C	C	A	D		E	D		F
Approach Vol, veh/h		1392			1196			157			820	
Approach Delay, s/veh		23.9			22.6			55.0			65.6	
Approach LOS		C			C			E			E	

Timer	1	2	3	4	5	6	7	8
Assigned Phs		2		4	5	6		8
Phs Duration (G+Y+Rc), s		65.4		31.9	21.0	44.4		12.7
Change Period (Y+Rc), s		* 6.1		4.9	4.4	6.1		4.0
Max Green Setting (Gmax), s		* 53		27.0	16.6	31.0		16.0
Max Q Clear Time (g_c+I1), s		2.0		29.0	18.6	23.6		8.4
Green Ext Time (p_c), s		31.4		0.0	0.0	6.7		0.4

Intersection Summary	
HCM 2010 Ctrl Delay	34.4
HCM 2010 LOS	C

Notes

User approved volume balancing among the lanes for turning movement.

Intersection	
Int Delay, s/veh	66.8

Movement	EBL	EBT	WBT	WBR	SBL	SBR
Vol, veh/h	115	1288	957	35	64	155
Conflicting Peds, #/hr	0	0	0	3	0	0
Sign Control	Free	Free	Free	Free	Stop	Stop
RT Channelized	-	None	-	None	-	None
Storage Length	140	-	-	-	0	-
Veh in Median Storage, #	-	0	0	-	0	-
Grade, %	-	0	0	-	0	-
Peak Hour Factor	87	87	87	87	87	87
Heavy Vehicles, %	2	2	2	2	2	2
Mvmt Flow	132	1480	1100	40	74	178

Major/Minor	Major1		Major2		Minor2	
Conflicting Flow All	1140	0	-	0	2125	570
Stage 1	-	-	-	-	1120	-
Stage 2	-	-	-	-	1005	-
Critical Hdwy	4.14	-	-	-	6.84	6.94
Critical Hdwy Stg 1	-	-	-	-	5.84	-
Critical Hdwy Stg 2	-	-	-	-	5.84	-
Follow-up Hdwy	2.22	-	-	-	3.52	3.32
Pot Cap-1 Maneuver	609	-	-	-	~ 43	465
Stage 1	-	-	-	-	274	-
Stage 2	-	-	-	-	315	-
Platoon blocked, %		-	-	-		
Mov Cap-1 Maneuver	609	-	-	-	~ 34	465
Mov Cap-2 Maneuver	-	-	-	-	~ 34	-
Stage 1	-	-	-	-	274	-
Stage 2	-	-	-	-	247	-

Approach	EB	WB	SB
HCM Control Delay, s	1	0	$ 791.1
HCM LOS			F

Minor Lane/Major Mvmt	EBL	EBT	WBT	WBR	SBLn1
Capacity (veh/h)	609	-	-	-	99
HCM Lane V/C Ratio	0.217	-	-	-	2.543
HCM Control Delay (s)	12.5	-	-	-	$ 791.1
HCM Lane LOS	B	-	-	-	F
HCM 95th %tile Q(veh)	0.8	-	-	-	23.2

Notes

~: Volume exceeds capacity $: Delay exceeds 300s +: Computation Not Defined *: All major volume in platoon

Movement	EBL	EBT	EBR	WBL	WBT	WBR	NBL	NBT	NBR	SBL	SBT	SBR
Lane Configurations												
Volume (veh/h)	66	974	312	168	760	43	179	53	163	25	21	53
Number	5	2	12	1	6	16	3	8	18	7	4	14
Initial Q (Qb), veh	0	0	0	0	0	0	0	0	0	0	0	0
Ped-Bike Adj(A_pbT)	1.00		0.98	1.00		0.97	1.00		0.97	1.00		1.00
Parking Bus, Adj	1.00	1.00	1.00	1.00	1.00	1.00	1.00	1.00	1.00	1.00	1.00	1.00
Adj Sat Flow, veh/h/ln	1863	1863	1863	1863	1863	1900	1863	1863	1863	1863	1863	1863
Adj Flow Rate, veh/h	73	1070	343	185	835	47	197	58	179	27	23	58
Adj No. of Lanes	1	2	1	1	2	0	1	1	1	1	1	1
Peak Hour Factor	0.91	0.91	0.91	0.91	0.91	0.91	0.91	0.91	0.91	0.91	0.91	0.91
Percent Heavy Veh, %	2	2	2	2	2	2	2	2	2	2	2	2
Cap, veh/h	93	1694	744	214	1860	105	219	357	486	36	165	140
Arrive On Green	0.05	0.48	0.48	0.12	0.55	0.55	0.12	0.19	0.19	0.02	0.09	0.09
Sat Flow, veh/h	1774	3539	1554	1774	3401	191	1774	1863	1536	1774	1863	1583
Grp Volume(v), veh/h	73	1070	343	185	434	448	197	58	179	27	23	58
Grp Sat Flow(s),veh/h/ln	1774	1770	1554	1774	1770	1823	1774	1863	1536	1774	1863	1583
Q Serve(g_s), s	4.5	24.8	16.2	11.3	16.2	16.2	12.0	2.9	10.0	1.7	1.3	3.8
Cycle Q Clear(g_c), s	4.5	24.8	16.2	11.3	16.2	16.2	12.0	2.9	10.0	1.7	1.3	3.8
Prop In Lane	1.00		1.00	1.00		0.11	1.00		1.00	1.00		1.00
Lane Grp Cap(c), veh/h	93	1694	744	214	968	997	219	357	486	36	165	140
V/C Ratio(X)	0.78	0.63	0.46	0.86	0.45	0.45	0.90	0.16	0.37	0.75	0.14	0.41
Avail Cap(c_a), veh/h	144	1694	744	268	968	997	219	571	662	90	440	374
HCM Platoon Ratio	1.00	1.00	1.00	1.00	1.00	1.00	1.00	1.00	1.00	1.00	1.00	1.00
Upstream Filter(I)	1.00	1.00	1.00	1.00	1.00	1.00	1.00	1.00	1.00	1.00	1.00	1.00
Uniform Delay (d), s/veh	51.5	21.4	19.2	47.5	15.0	15.0	47.5	37.1	29.4	53.6	46.3	47.4
Incr Delay (d2), s/veh	6.2	1.8	2.1	17.7	1.5	1.5	33.8	0.1	0.2	10.7	0.1	0.7
Initial Q Delay(d3),s/veh	0.0	0.0	0.0	0.0	0.0	0.0	0.0	0.0	0.0	0.0	0.0	0.0
%ile BackOfQ(50%),veh/ln	2.4	12.5	7.3	6.6	8.2	8.5	8.0	1.5	4.2	0.9	0.7	1.7
LnGrp Delay(d),s/veh	57.7	23.2	21.2	65.2	16.5	16.4	81.4	37.2	29.6	64.2	46.4	48.2
LnGrp LOS	E	C	C	E	B	B	F	D	C	E	D	D
Approach Vol, veh/h		1486			1067			434			108	
Approach Delay, s/veh		24.5			24.9			54.1			51.8	
Approach LOS		C			C			D			D	

Timer	1	2	3	4	5	6	7	8
Assigned Phs	1	2	3	4	5	6	7	8
Phs Duration (G+Y+Rc), s	17.7	59.4	18.0	14.9	10.2	66.9	6.6	26.3
Change Period (Y+Rc), s	4.4	* 6.7	4.4	* 5.2	4.4	6.7	4.4	5.2
Max Green Setting (Gmax), s	16.6	* 34	13.6	* 26	8.9	41.1	5.6	33.7
Max Q Clear Time (g_c+I1), s	13.3	26.8	14.0	5.8	6.5	18.2	3.7	12.0
Green Ext Time (p_c), s	0.1	5.1	0.0	0.7	0.0	12.0	0.0	0.7

Intersection Summary	
HCM 2010 Ctrl Delay	29.7
HCM 2010 LOS	C

Notes

* HCM 2010 computational engine requires equal clearance times for the phases crossing the barrier.

Movement	EBL	EBT	EBR	WBL	WBT	WBR	NBL	NBT	NBR	SBL	SBT	SBR
Lane Configurations												
Volume (veh/h)	19	26	36	65	39	38	67	1023	102	41	1035	23
Number	7	4	14	3	8	18	5	2	12	1	6	16
Initial Q (Qb), veh	0	0	0	0	0	0	0	0	0	0	0	0
Ped-Bike Adj(A_pbT)	0.99		0.94	0.95		0.98	1.00		0.96	1.00		0.96
Parking Bus, Adj	1.00	1.00	1.00	1.00	1.00	1.00	1.00	1.00	1.00	1.00	1.00	1.00
Adj Sat Flow, veh/h/ln	1900	1863	1900	1900	1863	1900	1863	1863	1900	1863	1863	1900
Adj Flow Rate, veh/h	20	27	38	68	41	40	70	1066	106	43	1078	24
Adj No. of Lanes	0	1	0	0	1	0	1	2	0	1	2	0
Peak Hour Factor	0.96	0.96	0.96	0.96	0.96	0.96	0.96	0.96	0.96	0.96	0.96	0.96
Percent Heavy Veh, %	2	2	2	2	2	2	2	2	2	2	2	2
Cap, veh/h	116	146	160	205	122	92	89	1718	171	57	1813	40
Arrive On Green	0.23	0.23	0.23	0.23	0.23	0.23	0.05	0.53	0.53	0.03	0.51	0.51
Sat Flow, veh/h	230	647	709	575	541	409	1774	3238	322	1774	3536	79
Grp Volume(v), veh/h	85	0	0	149	0	0	70	582	590	43	539	563
Grp Sat Flow(s),veh/h/ln	1586	0	0	1525	0	0	1774	1770	1790	1774	1770	1845
Q Serve(g_s), s	0.0	0.0	0.0	2.6	0.0	0.0	2.7	16.1	16.1	1.7	15.0	15.0
Cycle Q Clear(g_c), s	2.9	0.0	0.0	5.5	0.0	0.0	2.7	16.1	16.1	1.7	15.0	15.0
Prop In Lane	0.24		0.45	0.46		0.27	1.00		0.18	1.00		0.04
Lane Grp Cap(c), veh/h	421	0	0	419	0	0	89	939	950	57	907	946
V/C Ratio(X)	0.20	0.00	0.00	0.36	0.00	0.00	0.79	0.62	0.62	0.75	0.59	0.59
Avail Cap(c_a), veh/h	647	0	0	636	0	0	117	939	950	106	907	946
HCM Platoon Ratio	1.00	1.00	1.00	1.00	1.00	1.00	1.00	1.00	1.00	1.00	1.00	1.00
Upstream Filter(I)	1.00	0.00	0.00	1.00	0.00	0.00	1.00	1.00	1.00	0.78	0.78	0.78
Uniform Delay (d), s/veh	22.1	0.0	0.0	23.0	0.0	0.0	32.9	11.5	11.5	33.6	12.0	12.0
Incr Delay (d2), s/veh	0.1	0.0	0.0	0.2	0.0	0.0	16.7	3.1	3.1	5.6	2.3	2.2
Initial Q Delay(d3),s/veh	0.0	0.0	0.0	0.0	0.0	0.0	0.0	0.0	0.0	0.0	0.0	0.0
%ile BackOfQ(50%),veh/ln	1.4	0.0	0.0	2.5	0.0	0.0	1.8	8.6	8.7	0.9	7.8	8.1
LnGrp Delay(d),s/veh	22.2	0.0	0.0	23.2	0.0	0.0	49.5	14.6	14.6	39.2	14.2	14.1
LnGrp LOS	C			C			D	B	B	D	B	B
Approach Vol, veh/h		85			149			1242			1145	
Approach Delay, s/veh		22.2			23.2			16.5			15.1	
Approach LOS		C			C			B			B	

Timer	1	2	3	4	5	6	7	8
Assigned Phs	1	2		4	5	6		8
Phs Duration (G+Y+Rc), s	6.7	42.6		20.7	7.9	41.4		20.7
Change Period (Y+Rc), s	4.4	* 5.5		4.9	4.4	5.5		4.9
Max Green Setting (Gmax), s	4.3	* 25		26.1	4.6	24.5		26.1
Max Q Clear Time (g_c+I1), s	3.7	18.1		4.9	4.7	17.0		7.5
Green Ext Time (p_c), s	0.0	6.7		0.9	0.0	7.1		0.9

Intersection Summary	
HCM 2010 Ctrl Delay	16.5
HCM 2010 LOS	B

Notes

* HCM 2010 computational engine requires equal clearance times for the phases crossing the barrier.

Movement	EBL	EBT	EBR	WBL	WBT	WBR	NBL	NBT	NBR	SBL	SBT	SBR
Lane Configurations												
Volume (veh/h)	108	102	97	76	132	90	125	735	56	146	962	78
Number	7	4	14	3	8	18	5	2	12	1	6	16
Initial Q (Qb), veh	0	0	0	0	0	0	0	0	0	0	0	0
Ped-Bike Adj(A_pbT)	0.99		0.97	0.99		0.97	1.00		0.95	1.00		0.94
Parking Bus, Adj	1.00	1.00	1.00	1.00	1.00	1.00	1.00	1.00	1.00	1.00	1.00	1.00
Adj Sat Flow, veh/h/ln	1863	1863	1900	1863	1863	1900	1863	1863	1900	1863	1863	1900
Adj Flow Rate, veh/h	110	104	99	78	135	92	128	750	57	149	982	80
Adj No. of Lanes	1	1	0	1	1	0	1	2	0	1	2	0
Peak Hour Factor	0.98	0.98	0.98	0.98	0.98	0.98	0.98	0.98	0.98	0.98	0.98	0.98
Percent Heavy Veh, %	2	2	2	2	2	2	2	2	2	2	2	2
Cap, veh/h	293	248	236	310	293	199	160	1423	108	183	1457	119
Arrive On Green	0.29	0.29	0.29	0.29	0.29	0.29	0.09	0.43	0.43	0.10	0.44	0.44
Sat Flow, veh/h	1139	865	823	1162	1020	695	1774	3319	252	1774	3298	269
Grp Volume(v), veh/h	110	0	203	78	0	227	128	400	407	149	527	535
Grp Sat Flow(s),veh/h/ln	1139	0	1688	1162	0	1716	1774	1770	1802	1774	1770	1797
Q Serve(g_s), s	7.0	0.0	7.8	4.7	0.0	8.7	5.7	13.3	13.3	6.6	18.9	18.9
Cycle Q Clear(g_c), s	15.7	0.0	7.8	12.5	0.0	8.7	5.7	13.3	13.3	6.6	18.9	18.9
Prop In Lane	1.00		0.49	1.00		0.41	1.00		0.14	1.00		0.15
Lane Grp Cap(c), veh/h	293	0	484	310	0	492	160	759	773	183	782	794
V/C Ratio(X)	0.38	0.00	0.42	0.25	0.00	0.46	0.80	0.53	0.53	0.81	0.67	0.67
Avail Cap(c_a), veh/h	422	0	675	441	0	686	169	759	773	191	782	794
HCM Platoon Ratio	1.00	1.00	1.00	1.00	1.00	1.00	1.00	1.00	1.00	1.00	1.00	1.00
Upstream Filter(I)	1.00	0.00	1.00	1.00	0.00	1.00	0.80	0.80	0.80	0.72	0.72	0.72
Uniform Delay (d), s/veh	29.9	0.0	23.1	28.2	0.0	23.5	35.7	16.9	16.9	35.1	17.7	17.7
Incr Delay (d2), s/veh	0.3	0.0	0.2	0.2	0.0	0.3	16.9	2.1	2.1	15.5	3.3	3.3
Initial Q Delay(d3),s/veh	0.0	0.0	0.0	0.0	0.0	0.0	0.0	0.0	0.0	0.0	0.0	0.0
%ile BackOfQ(50%),veh/ln	2.2	0.0	3.6	1.5	0.0	4.1	3.5	6.9	7.0	4.0	9.9	10.1
LnGrp Delay(d),s/veh	30.2	0.0	23.4	28.3	0.0	23.7	52.6	19.0	18.9	50.6	21.1	21.0
LnGrp LOS	C		C	C		C	D	B	B	D	C	C
Approach Vol, veh/h		313			305			935			1211	
Approach Delay, s/veh		25.8			24.9			23.6			24.7	
Approach LOS		C			C			C			C	

Timer	1	2	3	4	5	6	7	8
Assigned Phs	1	2		4	5	6		8
Phs Duration (G+Y+Rc), s	12.7	39.5		27.8	11.6	40.6		27.8
Change Period (Y+Rc), s	4.4	5.2		4.9	4.4	* 5.2		4.9
Max Green Setting (Gmax), s	8.6	24.9		32.0	7.6	* 26		32.0
Max Q Clear Time (g_c+I1), s	19.6	15.3		17.7	7.7	20.9		14.5
Green Ext Time (p_c), s	0.0	7.5		1.9	0.0	4.4		2.1

Intersection Summary	
HCM 2010 Ctrl Delay	24.5
HCM 2010 LOS	C

Notes

* HCM 2010 computational engine requires equal clearance times for the phases crossing the barrier.

Movement	EBL	EBT	EBR	WBL	WBT	WBR	NBL	NBT	NBR	SBL	SBT	SBR
Lane Configurations												
Volume (veh/h)	103	173	62	50	143	221	91	973	68	450	1156	82
Number	7	4	14	3	8	18	5	2	12	1	6	16
Initial Q (Qb), veh	0	0	0	0	0	0	0	0	0	0	0	0
Ped-Bike Adj(A_pbT)	0.96		0.97	0.99		0.91	1.00		0.96	1.00		0.97
Parking Bus, Adj	1.00	1.00	1.00	1.00	1.00	1.00	1.00	1.00	1.00	1.00	1.00	1.00
Adj Sat Flow, veh/h/ln	1863	1863	1900	1863	1863	1863	1863	1863	1900	1863	1863	1900
Adj Flow Rate, veh/h	111	186	67	54	154	238	98	1046	73	484	1243	88
Adj No. of Lanes	1	1	0	1	1	1	1	2	0	1	2	0
Peak Hour Factor	0.93	0.93	0.93	0.93	0.93	0.93	0.93	0.93	0.93	0.93	0.93	0.93
Percent Heavy Veh, %	2	2	2	2	2	2	2	2	2	2	2	2
Cap, veh/h	253	333	120	220	479	372	124	1088	76	490	1778	126
Arrive On Green	0.26	0.26	0.26	0.26	0.26	0.26	0.07	0.33	0.33	0.28	0.53	0.53
Sat Flow, veh/h	951	1298	468	1114	1863	1447	1774	3346	233	1774	3346	236
Grp Volume(v), veh/h	111	0	253	54	154	238	98	553	566	484	656	675
Grp Sat Flow(s),veh/h/ln	951	0	1765	1114	1863	1447	1774	1770	1810	1774	1770	1813
Q Serve(g_s), s	10.7	0.0	12.4	4.4	6.7	14.6	5.4	30.7	30.7	27.2	27.6	27.8
Cycle Q Clear(g_c), s	17.4	0.0	12.4	16.8	6.7	14.6	5.4	30.7	30.7	27.2	27.6	27.8
Prop In Lane	1.00		0.26	1.00		1.00	1.00		0.13	1.00		0.13
Lane Grp Cap(c), veh/h	253	0	454	220	479	372	124	575	588	490	941	964
V/C Ratio(X)	0.44	0.00	0.56	0.25	0.32	0.64	0.79	0.96	0.96	0.99	0.70	0.70
Avail Cap(c_a), veh/h	275	0	494	245	522	405	153	575	588	490	941	964
HCM Platoon Ratio	1.00	1.00	1.00	1.00	1.00	1.00	1.00	1.00	1.00	1.00	1.00	1.00
Upstream Filter(I)	1.00	0.00	1.00	1.00	1.00	1.00	0.86	0.86	0.86	0.09	0.09	0.09
Uniform Delay (d), s/veh	37.1	0.0	32.2	39.5	30.1	33.0	45.8	33.1	33.1	36.0	17.4	17.5
Incr Delay (d2), s/veh	0.4	0.0	0.5	0.2	0.1	2.0	14.3	26.5	26.3	9.7	0.4	0.4
Initial Q Delay(d3),s/veh	0.0	0.0	0.0	0.0	0.0	0.0	0.0	0.0	0.0	0.0	0.0	0.0
%ile BackOfQ(50%),veh/ln	2.8	0.0	6.1	1.4	3.5	6.1	3.2	19.1	19.5	14.6	13.4	14.0
LnGrp Delay(d),s/veh	37.6	0.0	32.7	39.8	30.2	35.1	60.1	59.7	59.4	45.7	17.8	17.9
LnGrp LOS	D		C	D	C	D	E	E	E	D	B	B
Approach Vol, veh/h		364			446			1217			1815	
Approach Delay, s/veh		34.2			34.0			59.6			25.3	
Approach LOS		C			C			E			C	

Timer	1	2	3	4	5	6	7	8
Assigned Phs	1	2		4	5	6		8
Phs Duration (G+Y+Rc), s	32.0	37.4		30.6	11.4	58.0		30.6
Change Period (Y+Rc), s	4.4	4.9		4.9	4.4	4.9		4.9
Max Green Setting (Gmax), s	27.6	30.2		28.0	8.6	49.2		28.0
Max Q Clear Time (g_c+I1), s	19.4	32.7		19.4	7.4	29.8		18.8
Green Ext Time (p_c), s	0.0	0.0		1.9	0.0	19.0		2.0

Intersection Summary	
HCM 2010 Ctrl Delay	38.0
HCM 2010 LOS	D

Movement	EBL	EBT	EBR	WBL	WBT	WBR	NBL	NBT	NBR	SBL	SBT	SBR
Lane Configurations												
Volume (veh/h)	108	618	436	766	845	193	272	570	644	165	756	132
Number	5	2	12	1	6	16	3	8	18	7	4	14
Initial Q (Qb), veh	0	0	0	0	0	0	0	0	0	0	0	0
Ped-Bike Adj(A_pbT)	1.00		0.97	1.00		0.98	1.00		0.96	1.00		0.87
Parking Bus, Adj	1.00	1.00	1.00	1.00	1.00	1.00	1.00	1.00	1.00	1.00	1.00	1.00
Adj Sat Flow, veh/h/ln	1863	1863	1863	1863	1863	1863	1863	1863	1863	1863	1863	1900
Adj Flow Rate, veh/h	114	651	459	806	889	203	286	600	678	174	796	139
Adj No. of Lanes	1	2	1	2	2	1	1	2	1	2	2	0
Peak Hour Factor	0.95	0.95	0.95	0.95	0.95	0.95	0.95	0.95	0.95	0.95	0.95	0.95
Percent Heavy Veh, %	2	2	2	2	2	2	2	2	2	2	2	2
Cap, veh/h	136	1040	453	821	1612	710	240	1247	536	180	793	138
Arrive On Green	0.08	0.29	0.29	0.24	0.46	0.46	0.14	0.35	0.35	0.05	0.27	0.27
Sat Flow, veh/h	1774	3539	1543	3442	3539	1558	1774	3539	1521	3442	2940	513
Grp Volume(v), veh/h	114	651	459	806	889	203	286	600	678	174	479	456
Grp Sat Flow(s),veh/h/ln	1774	1770	1543	1721	1770	1558	1774	1770	1521	1721	1770	1683
Q Serve(g_s), s	9.2	23.1	42.6	33.8	26.5	11.8	19.6	19.2	51.1	7.3	39.1	39.1
Cycle Q Clear(g_c), s	9.2	23.1	42.6	33.8	26.5	11.8	19.6	19.2	51.1	7.3	39.1	39.1
Prop In Lane	1.00		1.00	1.00		1.00	1.00		1.00	1.00		0.30
Lane Grp Cap(c), veh/h	136	1040	453	821	1612	710	240	1247	536	180	477	454
V/C Ratio(X)	0.84	0.63	1.01	0.98	0.55	0.29	1.19	0.48	1.27	0.96	1.00	1.00
Avail Cap(c_a), veh/h	230	1040	453	821	1612	710	240	1247	536	180	477	454
HCM Platoon Ratio	1.00	1.00	1.00	1.00	1.00	1.00	1.00	1.00	1.00	1.00	1.00	1.00
Upstream Filter(I)	1.00	1.00	1.00	1.00	1.00	1.00	0.47	0.47	0.47	1.00	1.00	1.00
Uniform Delay (d), s/veh	66.0	44.3	51.2	54.9	28.7	24.7	62.7	36.6	47.0	68.6	52.9	53.0
Incr Delay (d2), s/veh	5.0	2.9	45.4	26.7	1.4	1.0	104.7	0.6	126.4	56.2	42.2	43.3
Initial Q Delay(d3),s/veh	0.0	0.0	0.0	0.0	0.0	0.0	0.0	0.0	0.0	0.0	0.0	0.0
%ile BackOfQ(50%),veh/ln	4.7	11.7	23.9	19.1	13.3	5.3	16.6	9.4	40.2	4.9	24.7	23.6
LnGrp Delay(d),s/veh	71.1	47.2	96.7	81.6	30.1	25.7	167.4	37.2	173.3	124.7	95.2	96.3
LnGrp LOS	E	D	F	F	C	C	F	D	F	F	F	F
Approach Vol, veh/h		1224			1898			1564			1109	
Approach Delay, s/veh		68.0			51.5			120.0			100.3	
Approach LOS		E			D			F			F	

Timer	1	2	3	4	5	6	7	8
Assigned Phs	1	2	3	4	5	6	7	8
Phs Duration (G+Y+Rc), s	39.0	48.2	24.0	44.3	15.6	71.6	12.0	56.3
Change Period (Y+Rc), s	4.4	5.3	4.4	5.2	4.4	5.3	4.4	* 5.2
Max Green Setting (Gmax), s	34.6	32.7	19.6	38.8	18.8	48.5	7.6	* 51
Max Q Clear Time (g_c+I1), s	35.8	44.6	21.6	41.1	11.2	28.5	9.3	53.1
Green Ext Time (p_c), s	0.0	0.0	0.0	0.0	0.1	17.0	0.0	0.0

Intersection Summary	
HCM 2010 Ctrl Delay	82.8
HCM 2010 LOS	F

Notes

* HCM 2010 computational engine requires equal clearance times for the phases crossing the barrier.

Movement	WBL	WBR	NBT	NBR	SBL	SBT
Lane Configurations						
Volume (veh/h)	750	215	1994	1016	551	1651
Number	3	18	2	12	1	6
Initial Q (Qb), veh	0	0	0	0	0	0
Ped-Bike Adj(A_pbT)	1.00	1.00		0.98	1.00	
Parking Bus, Adj	1.00	1.00	1.00	1.00	1.00	1.00
Adj Sat Flow, veh/h/ln	1863	1863	1863	1863	1863	1863
Adj Flow Rate, veh/h	781	224	2077	1058	574	1720
Adj No. of Lanes	2	1	2	1	2	2
Peak Hour Factor	0.96	0.96	0.96	0.96	0.96	0.96
Percent Heavy Veh, %	2	2	2	2	2	2
Cap, veh/h	704	314	1932	1158	495	2545
Arrive On Green	0.20	0.20	0.55	0.55	0.14	0.72
Sat Flow, veh/h	3548	1583	3632	1546	3442	3632
Grp Volume(v), veh/h	781	224	2077	1058	574	1720
Grp Sat Flow(s),veh/h/ln	1774	1583	1770	1546	1721	1770
Q Serve(g_s), s	29.8	19.8	82.0	82.0	21.6	39.9
Cycle Q Clear(g_c), s	29.8	19.8	82.0	82.0	21.6	39.9
Prop In Lane	1.00	1.00		1.00	1.00	
Lane Grp Cap(c), veh/h	704	314	1932	1158	495	2545
V/C Ratio(X)	1.11	0.71	1.08	0.91	1.16	0.68
Avail Cap(c_a), veh/h	704	314	1932	1158	495	2560
HCM Platoon Ratio	1.00	1.00	1.00	1.00	1.00	1.00
Upstream Filter(I)	1.00	1.00	1.00	1.00	1.00	1.00
Uniform Delay (d), s/veh	60.2	56.2	34.1	15.4	64.3	11.5
Incr Delay (d2), s/veh	67.9	6.4	44.1	11.2	92.3	1.0
Initial Q Delay(d3),s/veh	0.0	0.0	0.0	0.0	0.0	0.0
%ile BackOfQ(50%),veh/ln	21.2	9.2	51.5	47.4	16.6	19.7
LnGrp Delay(d),s/veh	128.1	62.6	78.2	26.6	156.6	12.5
LnGrp LOS	F	E	F	C	F	B
Approach Vol, veh/h	1005		3135			2294
Approach Delay, s/veh	113.5		60.8			48.6
Approach LOS	F		E			D

Timer	1	2	3	4	5	6	7	8
Assigned Phs	1	2				6		8
Phs Duration (G+Y+Rc), s	36.0	88.2				114.2		36.0
Change Period (Y+Rc), s	4.4	6.2				* 6.2		6.2
Max Green Setting (Gmax), s	31.6	81.8				* 1.1E2		29.8
Max Q Clear Time (g_c+I1), s	23.6	84.0				41.9		31.8
Green Ext Time (p_c), s	0.0	0.0				66.1		0.0

Intersection Summary	
HCM 2010 Ctrl Delay	64.7
HCM 2010 LOS	E

Notes

User approved volume balancing among the lanes for turning movement.

Movement	EBL	EBT	WBT	WBR	SBL	SBR
Lane Configurations						
Volume (veh/h)	230	1246	657	456	347	341
Number	5	2	6	16	7	14
Initial Q (Qb), veh	0	0	0	0	0	0
Ped-Bike Adj(A_pbT)	1.00			1.00	1.00	1.00
Parking Bus, Adj	1.00	1.00	1.00	1.00	1.00	1.00
Adj Sat Flow, veh/h/ln	1863	1863	1863	1863	1863	1863
Adj Flow Rate, veh/h	242	1312	692	480	475	241
Adj No. of Lanes	1	2	2	1	2	1
Peak Hour Factor	0.95	0.95	0.95	0.95	0.95	0.95
Percent Heavy Veh, %	2	2	2	2	2	2
Cap, veh/h	217	2186	1502	1000	735	328
Arrive On Green	0.12	0.62	0.42	0.42	0.21	0.21
Sat Flow, veh/h	1774	3632	3632	1583	3548	1583
Grp Volume(v), veh/h	242	1312	692	480	475	241
Grp Sat Flow(s),veh/h/ln	1774	1770	1770	1583	1774	1583
Q Serve(g_s), s	7.6	14.0	8.7	10.0	7.6	8.8
Cycle Q Clear(g_c), s	7.6	14.0	8.7	10.0	7.6	8.8
Prop In Lane	1.00			1.00	1.00	1.00
Lane Grp Cap(c), veh/h	217	2186	1502	1000	735	328
V/C Ratio(X)	1.12	0.60	0.46	0.48	0.65	0.74
Avail Cap(c_a), veh/h	217	2221	1561	1026	862	385
HCM Platoon Ratio	1.00	1.00	1.00	1.00	1.00	1.00
Upstream Filter(I)	1.00	1.00	1.00	1.00	1.00	1.00
Uniform Delay (d), s/veh	27.3	7.2	12.8	6.1	22.6	23.0
Incr Delay (d2), s/veh	95.5	0.6	0.3	0.5	2.3	8.5
Initial Q Delay(d3),s/veh	0.0	0.0	0.0	0.0	0.0	0.0
%ile BackOfQ(50%),veh/ln	9.4	6.9	4.3	6.8	3.9	8.2
LnGrp Delay(d),s/veh	122.8	7.8	13.1	6.6	24.8	31.6
LnGrp LOS	F	A	B	A	C	C
Approach Vol, veh/h		1554	1172		716	
Approach Delay, s/veh		25.7	10.5		27.1	
Approach LOS		C	B		C	

Timer	1	2	3	4	5	6	7	8
Assigned Phs		2		4	5	6		
Phs Duration (G+Y+Rc), s		44.4		17.8	12.0	32.4		
Change Period (Y+Rc), s		6.0		4.9	4.4	* 6		
Max Green Setting (Gmax), s		39.0		15.1	7.6	* 27		
Max Q Clear Time (g_c+I1), s		16.0		10.8	9.6	12.0		
Green Ext Time (p_c), s		20.9		2.0	0.0	14.4		

Intersection Summary	
HCM 2010 Ctrl Delay	20.8
HCM 2010 LOS	C

Notes

User approved volume balancing among the lanes for turning movement.

Movement	EBL	EBT	EBR	WBL	WBT	WBR	NBL	NBT	NBR	SBL	SBT	SBR
Lane Configurations												
Volume (veh/h)	121	1997	59	65	1122	108	41	9	41	245	17	140
Number	5	2	12	1	6	16	3	8	18	7	4	14
Initial Q (Qb), veh	0	0	0	0	0	0	0	0	0	0	0	0
Ped-Bike Adj(A_pbT)	1.00		1.00	1.00		1.00	1.00		1.00	1.00		1.00
Parking Bus, Adj	1.00	1.00	1.00	1.00	1.00	1.00	1.00	1.00	1.00	1.00	1.00	1.00
Adj Sat Flow, veh/h/ln	1863	1863	1900	1863	1863	1900	1900	1863	1863	1863	1863	1900
Adj Flow Rate, veh/h	129	2124	63	69	1194	115	44	10	44	261	18	149
Adj No. of Lanes	1	2	0	1	2	0	0	1	1	1	1	0
Peak Hour Factor	0.94	0.94	0.94	0.94	0.94	0.94	0.94	0.94	0.94	0.94	0.94	0.94
Percent Heavy Veh, %	2	2	2	2	2	2	2	2	2	2	2	2
Cap, veh/h	153	2158	64	58	1832	176	211	43	385	218	42	349
Arrive On Green	0.09	0.61	0.61	0.03	0.56	0.56	0.24	0.24	0.24	0.24	0.24	0.24
Sat Flow, veh/h	1774	3510	104	1774	3263	314	676	179	1583	1345	173	1436
Grp Volume(v), veh/h	129	1065	1122	69	646	663	54	0	44	261	0	167
Grp Sat Flow(s),veh/h/ln	1774	1770	1844	1774	1770	1807	855	0	1583	1345	0	1609
Q Serve(g_s), s	10.0	81.7	83.8	4.6	35.4	35.6	4.5	0.0	3.0	17.4	0.0	12.3
Cycle Q Clear(g_c), s	10.0	81.7	83.8	4.6	35.4	35.6	16.7	0.0	3.0	34.1	0.0	12.3
Prop In Lane	1.00		0.06	1.00		0.17	0.81		1.00	1.00		0.89
Lane Grp Cap(c), veh/h	153	1088	1134	58	993	1015	255	0	385	218	0	392
V/C Ratio(X)	0.84	0.98	0.99	1.18	0.65	0.65	0.21	0.00	0.11	1.20	0.00	0.43
Avail Cap(c_a), veh/h	286	1090	1136	58	993	1015	255	0	385	218	0	392
HCM Platoon Ratio	1.00	1.00	1.00	1.00	1.00	1.00	1.00	1.00	1.00	1.00	1.00	1.00
Upstream Filter(I)	1.00	1.00	1.00	1.00	1.00	1.00	1.00	0.00	1.00	1.00	0.00	1.00
Uniform Delay (d), s/veh	63.1	26.1	26.5	67.8	21.2	21.3	50.2	0.0	41.3	63.4	0.0	44.8
Incr Delay (d2), s/veh	4.8	22.7	24.2	176.5	3.3	3.2	0.2	0.0	0.0	124.5	0.0	0.3
Initial Q Delay(d3),s/veh	0.0	0.0	0.0	0.0	0.0	0.0	0.0	0.0	0.0	0.0	0.0	0.0
%ile BackOfQ(50%),veh/ln	5.1	46.5	50.0	5.1	18.1	18.6	1.8	0.0	1.3	16.0	0.0	5.5
LnGrp Delay(d),s/veh	67.9	48.9	50.8	244.3	24.5	24.5	50.4	0.0	41.3	187.9	0.0	45.0
LnGrp LOS	E	D	D	F	C	C	D		D	F		D
Approach Vol, veh/h		2316			1378			98			428	
Approach Delay, s/veh		50.8			35.5			46.3			132.1	
Approach LOS		D			D			D			F	

Timer	1	2	3	4	5	6	7	8
Assigned Phs	1	2		4	5	6		8
Phs Duration (G+Y+Rc), s	9.0	92.1		39.0	16.5	84.7		39.0
Change Period (Y+Rc), s	4.4	* 6		4.9	4.4	6.0		4.9
Max Green Setting (Gmax), s	4.6	* 86		34.1	22.6	68.0		34.1
Max Q Clear Time (g_c+I1), s	6.6	85.8		36.1	12.0	37.6		18.7
Green Ext Time (p_c), s	0.0	0.3		0.0	0.1	30.4		1.3

Intersection Summary	
HCM 2010 Ctrl Delay	54.0
HCM 2010 LOS	D

Notes

* HCM 2010 computational engine requires equal clearance times for the phases crossing the barrier.

Movement	EBL	EBT	EBR	WBL	WBT	WBR	NBL	NBT	NBR	SBL	SBT	SBR
Lane Configurations												
Volume (veh/h)	212	1268	417	389	776	396	155	116	437	509	150	161
Number	5	2	12	1	6	16	3	8	18	7	4	14
Initial Q (Qb), veh	0	0	0	0	0	0	0	0	0	0	0	0
Ped-Bike Adj(A_pbT)	1.00		1.00	1.00		0.98	1.00		1.00	1.00		1.00
Parking Bus, Adj	1.00	1.00	1.00	1.00	1.00	1.00	1.00	1.00	1.00	1.00	1.00	1.00
Adj Sat Flow, veh/h/ln	1863	1863	1863	1863	1863	1863	1863	1863	1863	1863	1863	1863
Adj Flow Rate, veh/h	221	1321	453	423	808	412	168	126	475	530	163	168
Adj No. of Lanes	1	2	1	1	2	1	1	2	1	2	1	1
Peak Hour Factor	0.96	0.96	0.92	0.92	0.96	0.96	0.92	0.92	0.92	0.96	0.92	0.96
Percent Heavy Veh, %	2	2	2	2	2	2	2	2	2	2	2	2
Cap, veh/h	256	1332	778	428	1675	992	203	430	575	553	312	494
Arrive On Green	0.14	0.38	0.38	0.24	0.47	0.47	0.11	0.12	0.12	0.16	0.17	0.17
Sat Flow, veh/h	1774	3539	1583	1774	3539	1558	1774	3539	1583	3442	1863	1580
Grp Volume(v), veh/h	221	1321	453	423	808	412	168	126	475	530	163	168
Grp Sat Flow(s),veh/h/ln	1774	1770	1583	1774	1770	1558	1774	1770	1583	1721	1863	1580
Q Serve(g_s), s	17.0	52.0	28.6	33.3	21.8	18.4	13.0	4.5	17.0	21.4	11.2	11.5
Cycle Q Clear(g_c), s	17.0	52.0	28.6	33.3	21.8	18.4	13.0	4.5	17.0	21.4	11.2	11.5
Prop In Lane	1.00		1.00	1.00		1.00	1.00		1.00	1.00		1.00
Lane Grp Cap(c), veh/h	256	1332	778	428	1675	992	203	430	575	553	312	494
V/C Ratio(X)	0.86	0.99	0.58	0.99	0.48	0.42	0.83	0.29	0.83	0.96	0.52	0.34
Avail Cap(c_a), veh/h	370	1332	778	428	1675	992	237	430	575	553	312	494
HCM Platoon Ratio	1.00	1.00	1.00	1.00	1.00	1.00	1.00	1.00	1.00	1.00	1.00	1.00
Upstream Filter(I)	1.00	1.00	1.00	1.00	1.00	1.00	1.00	1.00	1.00	1.00	1.00	1.00
Uniform Delay (d), s/veh	58.5	43.4	25.4	52.9	25.2	12.7	60.6	56.0	40.6	58.3	53.2	37.1
Incr Delay (d2), s/veh	9.8	22.5	0.9	40.1	0.1	0.1	18.5	0.4	9.7	28.0	0.8	0.2
Initial Q Delay(d3),s/veh	0.0	0.0	0.0	0.0	0.0	0.0	0.0	0.0	0.0	0.0	0.0	0.0
%ile BackOfQ(50%),veh/ln	9.0	29.5	12.7	21.1	10.7	8.0	7.4	2.2	18.2	12.3	5.8	5.0
LnGrp Delay(d),s/veh	68.3	66.0	26.3	93.0	25.2	12.8	79.1	56.4	50.3	86.3	53.9	37.2
LnGrp LOS	E	E	C	F	C	B	E	E	D	F	D	D
Approach Vol, veh/h		1995			1643			769			861	
Approach Delay, s/veh		57.2			39.6			57.6			70.6	
Approach LOS		E			D			E			E	

Timer	1	2	3	4	5	6	7	8
Assigned Phs	1	2	3	4	5	6	7	8
Phs Duration (G+Y+Rc), s	37.3	56.2	19.6	26.9	23.7	69.8	26.0	20.5
Change Period (Y+Rc), s	4.5	4.5	4.5	4.5	4.5	4.5	4.5	4.5
Max Green Setting (Gmax), s	32.8	51.7	17.7	19.8	28.2	56.3	21.5	16.0
Max Q Clear Time (g_c+I1), s	15.3	54.0	15.0	13.5	19.0	23.8	23.4	19.0
Green Ext Time (p_c), s	0.0	0.0	0.1	2.1	0.2	17.5	0.0	0.0

Intersection Summary	
HCM 2010 Ctrl Delay	54.0
HCM 2010 LOS	D

Movement	EBL	EBT	EBR	WBL	WBT	WBR	NBL	NBT	NBR	SBL	SBT	SBR
Lane Configurations												
Volume (veh/h)	5	1917	361	248	919	10	354	4	524	11	4	0
Number	5	2	12	1	6	16	3	8	18	7	4	14
Initial Q (Qb), veh	0	0	0	0	0	0	0	0	0	0	0	0
Ped-Bike Adj(A_pbT)	1.00		0.99	1.00		0.97	1.00		0.98	1.00		1.00
Parking Bus, Adj	1.00	1.00	1.00	1.00	1.00	1.00	1.00	1.00	1.00	1.00	1.00	1.00
Adj Sat Flow, veh/h/ln	1863	1863	1900	1863	1863	1900	1900	1863	1863	1900	1863	1900
Adj Flow Rate, veh/h	5	2084	392	270	999	11	385	4	570	12	4	0
Adj No. of Lanes	1	3	0	2	2	0	0	1	1	0	1	0
Peak Hour Factor	0.92	0.92	0.92	0.92	0.92	0.92	0.92	0.92	0.92	0.92	0.92	0.92
Percent Heavy Veh, %	2	2	2	2	2	2	2	2	2	2	2	2
Cap, veh/h	9	2311	421	326	2241	25	410	4	551	46	9	0
Arrive On Green	0.01	0.54	0.54	0.09	0.63	0.63	0.26	0.26	0.26	0.26	0.26	0.00
Sat Flow, veh/h	1774	4316	787	3442	3584	39	1386	14	1554	0	35	0
Grp Volume(v), veh/h	5	1623	853	270	493	517	389	0	570	16	0	0
Grp Sat Flow(s),veh/h/ln	1774	1695	1712	1721	1770	1854	1401	0	1554	35	0	0
Q Serve(g_s), s	0.4	58.0	62.7	10.5	19.7	19.7	0.0	0.0	35.1	0.0	0.0	0.0
Cycle Q Clear(g_c), s	0.4	58.0	62.7	10.5	19.7	19.7	35.1	0.0	35.1	35.1	0.0	0.0
Prop In Lane	1.00		0.46	1.00		0.02	0.99		1.00	0.75		0.00
Lane Grp Cap(c), veh/h	9	1815	917	326	1106	1159	414	0	551	55	0	0
V/C Ratio(X)	0.56	0.89	0.93	0.83	0.45	0.45	0.94	0.00	1.03	0.29	0.00	0.00
Avail Cap(c_a), veh/h	52	1815	917	698	1106	1159	414	0	551	55	0	0
HCM Platoon Ratio	1.00	1.00	1.00	1.00	1.00	1.00	1.00	1.00	1.00	1.00	1.00	1.00
Upstream Filter(I)	0.28	0.28	0.28	0.89	0.89	0.89	1.00	0.00	1.00	1.00	0.00	0.00
Uniform Delay (d), s/veh	67.5	28.2	29.3	60.5	13.3	13.3	51.7	0.0	44.1	48.2	0.0	0.0
Incr Delay (d2), s/veh	5.5	2.2	6.1	1.9	1.2	1.1	29.1	0.0	47.4	1.5	0.0	0.0
Initial Q Delay(d3),s/veh	0.0	0.0	0.0	0.0	0.0	0.0	0.0	0.0	0.0	0.0	0.0	0.0
%ile BackOfQ(50%),veh/ln	0.2	27.6	30.9	5.1	9.9	10.4	17.9	0.0	27.9	0.6	0.0	0.0
LnGrp Delay(d),s/veh	73.0	30.4	35.4	62.3	14.4	14.4	80.8	0.0	91.5	49.7	0.0	0.0
LnGrp LOS	E	C	D	E	B	B	F		F	D		
Approach Vol, veh/h		2481			1280			959			16	
Approach Delay, s/veh		32.2			24.5			87.1			49.7	
Approach LOS		C			C			F			D	

Timer	1	2	3	4	5	6	7	8
Assigned Phs	1	2		4	5	6		8
Phs Duration (G+Y+Rc), s	17.3	78.7		40.0	5.1	90.9		40.0
Change Period (Y+Rc), s	4.4	5.9		4.9	4.4	* 5.9		4.9
Max Green Setting (Gmax), s	27.6	58.1		35.1	4.0	* 82		35.1
Max Q Clear Time (g_c+I1), s	12.5	64.7		37.1	2.4	21.7		37.1
Green Ext Time (p_c), s	0.4	0.0		0.0	0.0	50.7		0.0

Intersection Summary	
HCM 2010 Ctrl Delay	41.3
HCM 2010 LOS	D

Notes

* HCM 2010 computational engine requires equal clearance times for the phases crossing the barrier.

Movement	EBL	EBT	EBR	WBL	WBT	WBR	NBL	NBT	NBR	SBL	SBT	SBR
Lane Configurations												
Volume (veh/h)	5	2580	72	228	1049	0	63	0	290	0	0	0
Number	5	2	12	1	6	16	3	8	18			
Initial Q (Qb), veh	0	0	0	0	0	0	0	0	0			
Ped-Bike Adj(A_pbT)	1.00		1.00	1.00		1.00	1.00		1.00			
Parking Bus, Adj	1.00	1.00	1.00	1.00	1.00	1.00	1.00	1.00	1.00			
Adj Sat Flow, veh/h/ln	1863	1863	1900	1863	1863	0	1863	0	1863			
Adj Flow Rate, veh/h	5	2745	77	243	1116	0	67	0	309			
Adj No. of Lanes	1	3	0	2	2	0	1	0	1			
Peak Hour Factor	0.92	0.94	0.94	0.94	0.94	0.92	0.94	0.92	0.94			
Percent Heavy Veh, %	2	2	2	2	2	0	2	0	2			
Cap, veh/h	9	2859	80	214	2207	0	387	0	345			
Arrive On Green	0.01	0.56	0.56	0.06	0.62	0.00	0.22	0.00	0.22			
Sat Flow, veh/h	1774	5086	142	3442	3632	0	1774	0	1583			
Grp Volume(v), veh/h	5	1822	1000	243	1116	0	67	0	309			
Grp Sat Flow(s),veh/h/ln	1774	1695	1837	1721	1770	0	1774	0	1583			
Q Serve(g_s), s	0.3	45.8	47.0	5.6	15.6	0.0	2.8	0.0	17.1			
Cycle Q Clear(g_c), s	0.3	45.8	47.0	5.6	15.6	0.0	2.8	0.0	17.1			
Prop In Lane	1.00		0.08	1.00		0.00	1.00		1.00			
Lane Grp Cap(c), veh/h	9	1906	1033	214	2207	0	387	0	345			
V/C Ratio(X)	0.54	0.96	0.97	1.13	0.51	0.00	0.17	0.00	0.90			
Avail Cap(c_a), veh/h	79	1906	1033	214	2207	0	611	0	545			
HCM Platoon Ratio	1.00	1.00	1.00	1.00	1.00	1.00	1.00	1.00	1.00			
Upstream Filter(I)	0.10	0.10	0.10	1.00	1.00	0.00	1.00	0.00	1.00			
Uniform Delay (d), s/veh	44.7	18.7	18.9	42.2	9.3	0.0	28.6	0.0	34.2			
Incr Delay (d2), s/veh	4.8	1.9	4.1	102.5	0.8	0.0	0.1	0.0	7.8			
Initial Q Delay(d3),s/veh	0.0	0.0	0.0	0.0	0.0	0.0	0.0	0.0	0.0			
%ile BackOfQ(50%),veh/ln	0.1	21.8	24.8	5.7	7.8	0.0	1.4	0.0	8.2			
LnGrp Delay(d),s/veh	49.5	20.6	23.1	144.7	10.1	0.0	28.7	0.0	42.0			
LnGrp LOS	D	C	C	F	B		C		D			
Approach Vol, veh/h		2827			1359			376				
Approach Delay, s/veh		21.5			34.2			39.6				
Approach LOS		C			C			D				

Timer	1	2	3	4	5	6	7	8
Assigned Phs	1	2			5	6		8
Phs Duration (G+Y+Rc), s	10.0	56.0			4.5	61.5		24.0
Change Period (Y+Rc), s	4.4	5.4			4.0	* 5.4		4.4
Max Green Setting (Gmax), s	5.6	39.2			4.0	* 41		31.0
Max Q Clear Time (g_c+I1), s	17.6	49.0			2.3	17.6		19.1
Green Ext Time (p_c), s	0.0	0.0			0.0	23.3		0.5

Intersection Summary	
HCM 2010 Ctrl Delay	26.8
HCM 2010 LOS	C

Notes

* HCM 2010 computational engine requires equal clearance times for the phases crossing the barrier.

Movement	EBL	EBT	EBR	WBL	WBT	WBR	NBL	NBT	NBR	SBL	SBT	SBR
Lane Configurations												
Volume (veh/h)	12	2696	223	800	1323	20	120	1	330	22	1	2
Number	5	2	12	1	6	16	3	8	18	7	4	14
Initial Q (Qb), veh	0	0	0	0	0	0	0	0	0	0	0	0
Ped-Bike Adj(A_pbT)	1.00		1.00	1.00		1.00	0.99		1.00	1.00		0.99
Parking Bus, Adj	1.00	1.00	1.00	1.00	1.00	1.00	1.00	1.00	1.00	1.00	1.00	1.00
Adj Sat Flow, veh/h/ln	1863	1863	1900	1863	1863	1900	1863	1863	1863	1863	1863	1900
Adj Flow Rate, veh/h	12	2808	232	833	1378	21	125	0	345	23	1	2
Adj No. of Lanes	1	3	0	2	3	0	1	0	2	1	1	0
Peak Hour Factor	0.96	0.96	0.96	0.96	0.96	0.96	0.96	0.96	0.96	0.96	0.96	0.96
Percent Heavy Veh, %	2	2	2	2	2	2	2	2	2	2	2	2
Cap, veh/h	19	2712	218	725	3950	60	222	0	399	178	70	139
Arrive On Green	0.01	0.57	0.57	0.21	0.77	0.77	0.13	0.00	0.13	0.13	0.13	0.13
Sat Flow, veh/h	1774	4798	386	3442	5160	79	1398	0	3167	1031	553	1106
Grp Volume(v), veh/h	12	1962	1078	833	905	494	125	0	345	23	0	3
Grp Sat Flow(s),veh/h/ln	1774	1695	1794	1721	1695	1849	1398	0	1583	1031	0	1658
Q Serve(g_s), s	1.0	84.8	84.8	31.6	12.8	12.8	12.9	0.0	16.0	3.0	0.0	0.2
Cycle Q Clear(g_c), s	1.0	84.8	84.8	31.6	12.8	12.8	13.1	0.0	16.0	3.0	0.0	0.2
Prop In Lane	1.00		0.22	1.00		0.04	1.00		1.00	1.00		0.67
Lane Grp Cap(c), veh/h	19	1916	1014	725	2595	1415	222	0	399	178	0	209
V/C Ratio(X)	0.64	1.02	1.06	1.15	0.35	0.35	0.56	0.00	0.86	0.13	0.00	0.01
Avail Cap(c_a), veh/h	62	1916	1014	725	2595	1415	325	0	633	254	0	332
HCM Platoon Ratio	1.00	1.00	1.00	1.00	1.00	1.00	1.00	1.00	1.00	1.00	1.00	1.00
Upstream Filter(I)	1.00	1.00	1.00	0.44	0.44	0.44	1.00	0.00	1.00	1.00	0.00	1.00
Uniform Delay (d), s/veh	73.9	32.6	32.6	59.2	5.6	5.6	63.1	0.0	64.3	58.6	0.0	57.4
Incr Delay (d2), s/veh	13.0	26.8	46.5	74.5	0.2	0.3	0.8	0.0	4.4	0.1	0.0	0.0
Initial Q Delay(d3),s/veh	0.0	0.0	0.0	0.0	0.0	0.0	0.0	0.0	0.0	0.0	0.0	0.0
%ile BackOfQ(50%),veh/ln	0.6	46.5	54.8	22.5	6.0	6.6	5.1	0.0	7.2	0.9	0.0	0.1
LnGrp Delay(d),s/veh	87.0	59.4	79.1	133.7	5.8	5.9	64.0	0.0	68.6	58.7	0.0	57.4
LnGrp LOS	F	F	F	F	A	A	E		E	E		E
Approach Vol, veh/h		3052			2232			470			26	
Approach Delay, s/veh		66.5			53.6			67.4			58.6	
Approach LOS		E			D			E			E	

Timer	1	2	3	4	5	6	7	8
Assigned Phs	1	2		4	5	6		8
Phs Duration (G+Y+Rc), s	36.0	90.2		23.8	6.0	120.2		23.8
Change Period (Y+Rc), s	4.4	5.4		4.9	4.4	* 5.4		4.9
Max Green Setting (Gmax), s	31.6	73.7		30.0	5.2	* 1E2		30.0
Max Q Clear Time (g_c+I1), s	33.6	86.8		5.0	3.0	14.8		18.0
Green Ext Time (p_c), s	0.0	0.0		1.0	0.0	83.0		0.9

Intersection Summary	
HCM 2010 Ctrl Delay	61.5
HCM 2010 LOS	E

Notes

User approved volume balancing among the lanes for turning movement.

Movement	EBL	EBT	EBR	WBL	WBT	WBR	NBL	NBT	NBR	SBL	SBT	SBR
Lane Configurations												
Volume (veh/h)	205	1997	846	943	1919	984	560	113	999	459	0	308
Number	5	2	12	1	6	16	3	8	18	7	4	14
Initial Q (Qb), veh	0	0	0	0	0	0	0	0	0	0	0	0
Ped-Bike Adj(A_pbT)	1.00		0.97	1.00		1.00	1.00		0.99	1.00		1.00
Parking Bus, Adj	1.00	1.00	1.00	1.00	1.00	1.00	1.00	1.00	1.00	1.00	1.00	1.00
Adj Sat Flow, veh/h/ln	1863	1863	1863	1863	1863	1863	1863	1863	1863	1863	0	1863
Adj Flow Rate, veh/h	214	2080	881	982	1999	1025	583	118	1041	478	0	321
Adj No. of Lanes	1	4	1	2	3	2	2	1	2	2	0	1
Peak Hour Factor	0.96	0.96	0.96	0.96	0.96	0.96	0.96	0.96	0.96	0.96	0.96	0.96
Percent Heavy Veh, %	2	2	2	2	2	2	2	2	2	2	0	2
Cap, veh/h	216	1991	971	874	2245	1659	1070	229	1046	530	0	0
Arrive On Green	0.12	0.31	0.31	0.25	0.44	0.44	0.31	0.12	0.12	0.15	0.00	0.00
Sat Flow, veh/h	1774	6408	1542	3442	5085	2787	3442	1863	2748	3442	478	
Grp Volume(v), veh/h	214	2080	881	982	1999	1025	583	118	1041	478	71.5	
Grp Sat Flow(s),veh/h/ln	1774	1602	1542	1721	1695	1393	1721	1863	1374	1721	E	
Q Serve(g_s), s	15.7	40.4	40.4	33.0	47.0	30.6	18.3	7.7	16.0	17.7		
Cycle Q Clear(g_c), s	15.7	40.4	40.4	33.0	47.0	30.6	18.3	7.7	16.0	17.7		
Prop In Lane	1.00		1.00	1.00		1.00	1.00		1.00	1.00		
Lane Grp Cap(c), veh/h	216	1991	971	874	2245	1659	1070	229	1046	530		
V/C Ratio(X)	0.99	1.04	0.91	1.12	0.89	0.62	0.54	0.51	1.00	0.90		
Avail Cap(c_a), veh/h	216	1991	971	874	2245	1659	1070	229	1046	556		
HCM Platoon Ratio	1.00	1.00	1.00	1.00	1.00	1.00	1.00	1.00	1.00	1.00		
Upstream Filter(I)	0.09	0.09	0.09	0.09	0.09	0.09	1.00	1.00	1.00	1.00		
Uniform Delay (d), s/veh	57.0	44.8	21.6	48.5	33.4	16.8	37.2	53.4	40.5	54.0		
Incr Delay (d2), s/veh	16.6	21.8	1.3	57.4	0.6	0.2	0.6	2.0	26.7	17.5		
Initial Q Delay(d3),s/veh	0.0	0.0	0.0	0.0	0.0	0.0	0.0	0.0	0.0	0.0		
%ile BackOfQ(50%),veh/ln	8.7	20.9	27.6	22.6	22.0	11.8	8.7	4.1	22.5	9.7		
LnGrp Delay(d),s/veh	73.6	66.6	22.9	105.9	34.0	17.0	37.7	55.3	67.2	71.5		
LnGrp LOS	E	F	C	F	C	B	D	E	E	E		
Approach Vol, veh/h		3175			4006			1742				
Approach Delay, s/veh		55.0			47.3			56.5				
Approach LOS		D			D			E				

Timer	1	2	3	4	5	6	7	8
Assigned Phs	1	2	3		5	6	7	8
Phs Duration (G+Y+Rc), s	37.0	47.4	44.6		20.0	64.4	24.0	20.6
Change Period (Y+Rc), s	4.0	7.0	* 4.2		* 4.2	7.0	4.0	4.6
Max Green Setting (Gmax), s	33.0	40.4	* 22		* 16	57.4	21.0	16.0
Max Q Clear Time (g_c+I1), s	35.0	42.4	20.3		17.7	49.0	19.7	18.0
Green Ext Time (p_c), s	0.0	0.0	0.4		0.0	8.4	0.3	0.0

Intersection Summary	
HCM 2010 Ctrl Delay	52.8
HCM 2010 LOS	D

Notes

* HCM 2010 computational engine requires equal clearance times for the phases crossing the barrier.

Movement	EBL	EBT	WBT	WBR	SBL	SBR
Lane Configurations						
Volume (veh/h)	653	2802	2346	1032	1219	1500
Number	5	2	6	16	7	14
Initial Q (Qb), veh	0	0	0	0	0	0
Ped-Bike Adj(A_pbT)	1.00			1.00	1.00	1.00
Parking Bus, Adj	1.00	1.00	1.00	1.00	1.00	1.00
Adj Sat Flow, veh/h/ln	1863	1863	1863	1863	1863	1863
Adj Flow Rate, veh/h	702	3013	2523	0	1311	1613
Adj No. of Lanes	2	4	4	2	3	2
Peak Hour Factor	0.93	0.93	0.93	0.93	0.93	0.93
Percent Heavy Veh, %	2	2	2	2	2	2
Cap, veh/h	728	3771	2218	965	1693	943
Arrive On Green	0.21	0.59	0.35	0.00	0.34	0.34
Sat Flow, veh/h	3442	6669	6669	2787	5003	2787
Grp Volume(v), veh/h	702	3013	2523	0	1311	1613
Grp Sat Flow(s),veh/h/ln	1721	1602	1602	1393	1668	1393
Q Serve(g_s), s	26.3	47.5	45.0	0.0	30.5	44.0
Cycle Q Clear(g_c), s	26.3	47.5	45.0	0.0	30.5	44.0
Prop In Lane	1.00			1.00	1.00	1.00
Lane Grp Cap(c), veh/h	728	3771	2218	965	1693	943
V/C Ratio(X)	0.96	0.80	1.14	0.00	0.77	1.71
Avail Cap(c_a), veh/h	728	3771	2218	965	1693	943
HCM Platoon Ratio	1.00	1.00	1.00	1.00	1.00	1.00
Upstream Filter(I)	0.11	0.11	1.00	0.00	1.00	1.00
Uniform Delay (d), s/veh	50.8	20.8	42.5	0.0	38.5	43.0
Incr Delay (d2), s/veh	5.2	0.2	68.0	0.0	2.3	324.1
Initial Q Delay(d3),s/veh	0.0	0.0	0.0	0.0	0.0	0.0
%ile BackOfQ(50%),veh/ln	13.0	21.0	30.3	0.0	14.4	70.6
LnGrp Delay(d),s/veh	56.0	21.0	110.5	0.0	40.9	367.1
LnGrp LOS	E	C	F		D	F
Approach Vol, veh/h		3715	2523		2924	
Approach Delay, s/veh		27.6	110.5		220.8	
Approach LOS		C	F		F	

Timer	1	2	3	4	5	6	7	8
Assigned Phs		2		4	5	6		
Phs Duration (G+Y+Rc), s		82.0		48.0	31.5	50.5		
Change Period (Y+Rc), s		5.5		4.0	4.0	5.5		
Max Green Setting (Gmax), s		76.5		44.0	27.5	45.0		
Max Q Clear Time (g_c+I1), s		49.5		46.0	28.3	47.0		
Green Ext Time (p_c), s		26.9		0.0	0.0	0.0		

Intersection Summary	
HCM 2010 Ctrl Delay	112.1
HCM 2010 LOS	F

Arterial Level of Service: EB Friars Road

Cross Street	Arterial Class	Flow Speed	Running Time	Signal Delay	Travel Time (s)	Dist (mi)	Arterial Speed	Arterial LOS
Napa Street	II	45	11.0	5.8	16.8	0.10	21.6	D
Colusa St	II	45	31.9	8.4	40.3	0.32	28.8	B
Via Las Cumbres	II	45	43.3	46.5	89.8	0.49	19.7	D
Total	II		86.2	60.7	146.9	0.91	22.4	C

Arterial Level of Service: WB Friars Road

Cross Street	Arterial Class	Flow Speed	Running Time	Signal Delay	Travel Time (s)	Dist (mi)	Arterial Speed	Arterial LOS
Via Las Cumbres	III	45	31.7	35.3	67.0	0.32	17.2	D
Colusa St	III	30	62.5	26.9	89.4	0.49	19.8	C
Napa Street	III	30	40.9	29.4	70.3	0.32	16.5	D
Total	III		135.1	91.6	226.7	1.13	18.0	C

Arterial Level of Service: NB Morena Blvd

Cross Street	Arterial Class	Flow Speed	Running Time	Signal Delay	Travel Time (s)	Dist (mi)	Arterial Speed	Arterial LOS
Taylor Street	III	30	15.5	23.4	38.9	0.11	10.2	E
Linda Vista Rd	III	45	38.8	17.7	56.5	0.43	27.2	B
Napa St	III	30	16.0	20.3	36.3	0.11	11.3	E
W. Morena Blvd	III	30	19.0	2.9	21.9	0.14	23.3	C
Buenos Ave	III	30	21.6	11.5	33.1	0.16	17.5	D
Tecolote Road	III	30	38.5	31.7	70.2	0.30	15.5	D
Total	III		149.4	107.5	256.9	1.26	17.6	D

Arterial Level of Service: SB Morena Blvd

Cross Street	Arterial Class	Flow Speed	Running Time	Signal Delay	Travel Time (s)	Dist (mi)	Arterial Speed	Arterial LOS
Tecolote Road	III	30	20.3	97.8	118.1	0.15	4.6	F
Buenos Ave	III	30	38.5	8.4	46.9	0.30	23.3	C
W. Morena Blvd	III	35	20.6	16.0	36.6	0.16	15.8	D
Sherman St	III	35	18.2	17.3	35.5	0.14	14.4	D
Linda Vista Rd	III	30	16.0	9.4	25.4	0.11	16.1	D
Taylor Street	III	45	38.8	8.5	47.3	0.43	32.4	A
Total	III		152.4	157.4	309.8	1.30	15.1	D

Arterial Level of Service: EB Friars Road

Cross Street	Arterial Class	Flow Speed	Running Time	Signal Delay	Travel Time (s)	Dist (mi)	Arterial Speed	Arterial LOS
Napa Street	II	45	10.1	9.5	19.6	0.09	17.0	D
Colusa St	II	45	33.7	37.2	70.9	0.35	17.8	D
Via Las Cumbres	II	45	43.3	58.3	101.6	0.49	17.4	D
Total	II		87.1	105.0	192.1	0.94	17.5	D

Arterial Level of Service: WB Friars Road

Cross Street	Arterial Class	Flow Speed	Running Time	Signal Delay	Travel Time (s)	Dist (mi)	Arterial Speed	Arterial LOS
Via Las Cumbres	III	45	31.7	26.7	58.4	0.32	19.7	C
Colusa St	III	30	62.5	23.7	86.2	0.49	20.6	C
Napa Street	III	30	44.6	13.8	58.4	0.35	21.6	C
Total	III		138.8	64.2	203.0	1.16	20.6	C

Arterial Level of Service: NB Morena Blvd

Cross Street	Arterial Class	Flow Speed	Running Time	Signal Delay	Travel Time (s)	Dist (mi)	Arterial Speed	Arterial LOS
Taylor Street	III	30	15.5	23.4	38.9	0.11	10.2	E
Linda Vista Rd	III	45	38.8	15.9	54.7	0.43	28.0	B
Napa St	III	30	16.0	23.1	39.1	0.11	10.5	E
W. Morena Blvd	III	30	19.0	1.0	20.0	0.14	25.6	B
Buenos Ave	III	30	21.6	11.5	33.1	0.16	17.5	D
Tecolote Road	III	30	38.5	39.1	77.6	0.30	14.1	D
Total	III		149.4	114.0	263.4	1.26	17.2	D

Arterial Level of Service: SB Morena Blvd

Cross Street	Arterial Class	Flow Speed	Running Time	Signal Delay	Travel Time (s)	Dist (mi)	Arterial Speed	Arterial LOS
Tecolote Road	III	30	20.3	121.7	142.0	0.15	3.8	F
Buenos Ave	III	30	38.5	13.0	51.5	0.30	21.2	C
W. Morena Blvd	III	35	20.6	16.9	37.5	0.16	15.5	D
Sherman St	III	35	18.2	15.4	33.6	0.14	15.2	D
Linda Vista Rd	III	30	16.0	24.5	40.5	0.11	10.1	E
Taylor Street	III	45	38.8	8.5	47.3	0.43	32.4	A
Total	III		152.4	200.0	352.4	1.30	13.3	E

APPENDIX K

SUPPLEMENTARY PARKING ASSESSMENT INFORMATION

Attachment B

UNIVERSITY OF SAN DIEGO

PARKING SURVEY

Loc. #	Parking Location Description	Total Spaces	Parking Type	October 07, 2014 Time 9:30 AM	11:30 AM	1:30 PM	3:30 PM	Loc. #	Parking Type	October 08, 2014 Time 9:30 AM	11:30 AM	1:30 PM	3:30 PM
1	UTA	17	White	12	10	11	11	1	White	11	11	10	10
		3	Reserved	1	1	1	1		Reserved	1	1	1	1
	Total	**20**		**13**	**11**	**12**	**12**			**12**	**12**	**11**	**11**
2	PTA S	28	White	17	15	16	15	2	White	13	14	18	14
		2	Disabled	0	0	0	0		Disabled	1	1	0	0
		1	Reserved	0	0	1	0		Reserved	0	0	0	0
	Total	**31**		**17**	**15**	**17**	**15**			**14**	**15**	**18**	**14**
3	PTA N	29	White	7	9	8	5	3	White	5	3	5	6
		1	Disabled	0	0	0	0		Disabled	0	0	0	0
		1	Reserved	0	0	0	0		Reserved	0	0	0	0
	Total	**31**		**7**	**9**	**8**	**5**			**5**	**3**	**5**	**6**
4	Alcala West S Lot	66	Yellow	7	4	5	5	4	Yellow	8	6	7	3
		4	Disabled	3	3	4	4		Disabled	4	4	4	4
		6	Visitor	4	4	2	3		Visitor	3	3	2	2
	Total	**76**		**14**	**11**	**11**	**12**			**15**	**13**	**13**	**9**
5	Alcala West N Lot	8	Yellow	5	7	5	4	5	Yellow	1	4	4	2
		2	Disabled	0	0	0	0		Disabled	0	0	0	1
		1	USD	1	1	1	1		USD	0	1	1	1
		2	15/30 Min	0	0	0	0		15/30 Min	0	0	0	0
		12	Visitor	9	10	7	9		Visitor	9	11	8	10
		2	M/C	2	0	0	0		M/C	0	2	2	0
	Total	**27**		**17**	**18**	**13**	**14**			**10**	**18**	**15**	**14**
6	Gravel Lot	**250**	White	**62**	**87**	**70**	**77**	6	White	**26**	**63**	**66**	**77**
7	West Lot	314	White	314	314	169	222	7	White	200	285	304	299
		2	Reserved	0	0	0	0		Reserved	0	0	0	0
	Total	**316**		**314**	**314**	**169**	**222**			**200**	**285**	**304**	**299**
8	West Structure - Fringe Parking	**341**	White	**29**	**129**	**129**	**123**	8	White	**41**	**60**	**83**	**112**
	West Structure Less Fringe Parking	412	White	358	265	315	362	9	White	210	310	356	319
		16	Disabled	0	0	0	0		Disabled	0	0	1	2
		1	USD	1	1	1	0		USD	0	0	0	0
	Total	**429**		**359**	**266**	**316**	**362**			**210**	**310**	**357**	**321**
9	Marian Way (to Copley Intersection)	51	White	51	50	51	51	10	White	50	51	48	51
		2	15/30 Min	0	0	0	0		15/30 Min	0	1	1	2
	Total	**53**		**51**	**50**	**51**	**51**			**50**	**52**	**49**	**53**
10A	IPJ Garage - Camio/Founders	120	White	0	0	0	0		White	0	0	0	0
		1	Reserved	0	0	0	0		Reserved	0	0	0	0
		1	M/C	0	0	0	0		M/C	0	0	0	0
10B	IPJ Garage	65	Yellow & White	14	4	0	17	11	Yellow & White	15	4	4	17
		6	Disabled	0	1	0	4		Disabled	0	1	3	4
		33	Reserved	15	19	27	19		Reserved	15	16	13	12
		1	15/30 Min	1	1	1	1		15/30 Min	0	0	0	0
		14	Carpool	14	14	14	14		Carpool	14	14	14	14
		3	M/C	0	0	0	0		M/C	1	1	2	2
	Total	**244**		**44**	**39**	**42**	**55**			**45**	**36**	**36**	**49**
11	IPJ S. Lot	34	White	18	19	16	16	12	White	16	17	14	13
		3	Disabled	3	0	0	0		Disabled	0	1	2	2
		3	Reserved	3	0	0	0		Reserved	0	1	1	0
		1	15/30 Min	1	1	1	1		15/30 Min	1	0	1	0
	Total	**41**		**25**	**20**	**17**	**17**			**17**	**19**	**18**	**15**
12	Soles Lot	31	White	31	31	31	31	13	White	31	31	31	31
		1	Disabled	0	1	0	1		Disabled	1	1	1	0
		2	15/30 Min	0	2	1	0		15/30 Min	1	1	2	2
	Total	**34**		**31**	**34**	**32**	**32**			**33**	**33**	**34**	**33**
13	Soles Garage	151	Yellow & White	151	150	150	150	14	Yellow & White	150	151	150	146
		6	Disabled	4	3	3	3		Disabled	3	3	6	3
		1	USD	1	1	1	1		USD	1	1	1	1
		26	Reserved	13	19	21	19		Reserved	19	20	19	15
		1	M/C	1	1	1	1		M/C	1	1	1	1
	Total	**185**		**170**	**174**	**176**	**174**			**174**	**176**	**177**	**166**
14	Alcala Park Founders/Copley	37	White	37	37	37	37	15	White	37	37	36	37
		4	USD	4	3	1	2		USD	0	4	2	4
		7	Reserved	7	7	6	7		Reserved	4	5	6	3
		5	Disabled	5	5	5	5		M/C	4	3	5	5
	Total	**53**		**53**	**52**	**49**	**51**			**45**	**49**	**49**	**49**
15	Marian Way	39	White	39	39	36	39	16	White	39	39	38	39
		1	Disabled	0	1	1	1		Disabled	0	1	1	0
		6	USD	2	5	5	4		USD	0	4	4	6
		3	Reserved	1	3	2	1		Reserved	3	1	1	3
		7	15/30 Min	5	5	6	7		15/30 Min	7	6	5	3
	Total	**56**		**47**	**53**	**50**	**52**			**49**	**51**	**49**	**51**
16	Olin Lot	68	Yellow	68	68	68	68	17	Yellow	68	68	68	68
		6	Disabled	5	1	0	1		Disabled	6	5	6	5
		62	Reserved	26	40	38	34		Reserved	27	36	39	40
		12	Carpool	12	12	12	10		Carpool	12	12	12	12
		3	M/C	3	3	0	3		M/C	3	3	3	3
	Total	**151**		**114**	**124**	**118**	**116**			**116**	**124**	**128**	**128**
17	Camino SD Manchester	1	USD	1	1	1	1	18	USD	1	1	1	1
		16	Reserved	10	12	13	11		Reserved	12	10	9	16
		1	15/30 Min	1	1	1	1		15/30 Min	0	0	0	0
		2	Disabled	1	2	0	2		Disabled	1	1	1	2
	Total	**20**		**13**	**16**	**15**	**15**			**14**	**12**	**11**	**19**
18	Camino SD Nursing	23	White	0	0	0	0	19	White	0	0	0	0
	(Area Under Construction)	5	Disabled	0	0	0	0		Disabled	0	0	0	0
		2	USD	0	0	0	0		USD	0	0	0	0
	Total	**30**		**0**	**0**	**0**	**0**			**0**	**0**	**0**	**0**
19	Immaculate N.	47	Yellow	47	47	47	47	20	Yellow	47	47	47	46
		2	Disabled	2	2	2	2		Disabled	2	2	0	2
	Total	**49**		**49**	**49**	**49**	**49**			**49**	**49**	**47**	**48**
20	Immaculate W.	26	Yellow	26	24	24	18	21	Yellow	26	26	26	26
		21	White	21	21	21	21		White	21	21	21	21
		2	Disabled	1	1	1	2		Disabled	2	2	2	2
		10	Reserved	7	8	7	9		Reserved	8	8	6	0
	Total	**59**		**55**	**54**	**53**	**50**			**57**	**57**	**55**	**49**
21	Alcala Park Immaculate	4	Yellow	4	4	4	4	22	Yellow	4	4	4	3
		2	Reserved	2	2	2	2		Reserved	2	1	1	2
	Total	**6**		**6**	**6**	**6**	**6**			**6**	**5**	**5**	**5**
22	Alacala Park Maher	1	Disabled	1	1	1	1		Disabled	1	1	1	1
		9	USD	4	4	7	4		USD	8	4	5	4
		5	Reserved	5	5	5	5		Reserved	4	5	4	5
		5	Visitor	5	5	5	5		Visitor	5	4	5	5
	Total	**20**		**15**	**15**	**18**	**15**			**18**	**14**	**15**	**15**
23	Stella Maris	1	Disabled	1	1	0	0	24	Disabled	1	1	1	1
		4	USD	3	3	3	3		USD	3	4	3	3
		4	Reserved	4	4	4	3		Reserved	4	2	4	3
		1	15/30 Min	1	1	1	1		15/30 Min	1	1	1	1
	Total	**10**		**9**	**9**	**8**	**7**			**9**	**8**	**9**	**8**
24	UC W. Lot	2	Disabled	2	2	1	0	25	Disabled	2	2	1	2
		47	Reserved	38	39	37	35		Reserved	32	37	37	39
		2	15/30 Min	0	2	2	0		15/30 Min	1	1	2	2
	Total	**51**		**40**	**43**	**40**	**35**			**35**	**40**	**40**	**43**
25	UC N. Lot	2	Disabled	1	1	1	2		Disabled	1	1	2	1
		10	USD	8	8	8	5		USD	8	10	10	7
		8	Reserved	5	5	6	5		Reserved	7	4	6	6
		12	Visitor	10	4	7	6		Visitor	1	6	10	6
		6	15/30 Min	5	5	6	6		15/30 Min	5	3	4	2
	Total	**38**		**29**	**23**	**28**	**24**			**22**	**24**	**32**	**22**
26	Torrero Way	30	White	30	30	26	30	27	White	30	29	28	29
		9	USD	9	8	7	1		USD	7	6	3	4
		3	Reserved	0	3	3	3		Reserved	3	3	3	1
		2	15/30 Min	1	2	2	1		15/30 Min	1	1	1	2
	Total	**44**		**40**	**43**	**38**	**35**			**41**	**39**	**35**	**36**
27	Hughes W. Lot	2	Disabled	1	2	1	1	28	Disabled	1	2	1	1

UNIVERSITY OF SAN DIEGO

PARKING SURVEY

Loc. #	Parking Location Description	Total Spaces	Parking Type	October 07, 2014 Time 9:30 AM	11:30 AM	1:30 PM	3:30 PM	Loc. #	Parking Type	October 08, 2014 Time 9:30 AM	11:30 AM	1:30 PM	3:30 PM
		1	USD	1	1	0	1		USD	0	1	1	1
		50	Reserved	27	33	32	35		Reserved	26	34	33	35
	Total	**53**		**29**	**36**	**33**	**37**			**27**	**37**	**35**	**37**
28	Serra W.	8	Yellow	8	8	8	6	29	Yellow	8	8	8	8
		2	Disabled	1	0	2	1		Disabled	0	1	1	2
		1	USD	0	0	1	1		USD	1	0	1	1
		19	Reserved	15	15	11	15		Reserved	17	18	18	15
	Total	**30**		**24**	**23**	**22**	**23**			**26**	**27**	**28**	**26**
29	Hughes S./E.	37	Yellow	37	36	37	33	30	Yellow	37	37	36	34
		2	Disabled	0	2	2	2		Disabled	1	1	1	2
		2	15/30 Min	1	1	1	1		15/30 Min	2	1	1	1
		12	Carpool	12	12	12	12		Carpool	12	12	12	12
		4	M/C	3	3	3	3		M/C	3	3	3	1
	Total	**57**		**53**	**54**	**55**	**51**			**55**	**54**	**53**	**50**
30	Camino SD Hughes	6	Reserved	3	5	3	6	31	Reserved	5	4	6	5
		6	Visitor	2	4	1	1		Visitor	3	4	3	4
	Total	**12**		**5**	**9**	**4**	**7**			**8**	**8**	**9**	**9**
31	Serra/Loma S.	15	Yellow	15	15	15	13	32	Yellow	15	14	15	12
		33	White	33	33	33	33		White	32	33	33	31
		3	Disabled	1	3	3	2		Disabled	2	2	2	2
		2	USD	2	2	2	2		USD	0	1	2	2
		10	Visitor	10	7	3	8		Visitor	9	4	6	4
		4	M/C	2	2	1	1		M/C	2	4	4	1
	Total	**67**		**63**	**62**	**57**	**59**			**60**	**58**	**62**	**52**
32	Camino SD Loma	**18**	Yellow	**18**	**18**	**18**	**18**	33	Yellow	**18**	**18**	**17**	**18**
33	Law School Lot	103	White	103	103	103	97	34	White	103	103	103	103
		5	Disabled	6	4	3	4		Disabled	4	4	5	5
		4	USD	2	2	2	3		USD	2	2	1	1
		100	Reserved	56	68	70	72		Reserved	51	68	70	68
		8	Carpool	8	8	8	6		Carpool	8	8	8	8
		2	M/C	2	2	2	2		M/C	2	2	2	1
	Total	**222**		**177**	**187**	**188**	**184**			**170**	**187**	**189**	**186**
34	LRC S.	55	Yellow	55	55	55	54	35	Yellow	55	54	55	54
		2	Disabled	1	1	1	1		Disabled	1	1	1	1
	Total	**57**		**56**	**56**	**56**	**55**			**56**	**55**	**56**	**55**
35	LRC E.	10	Yellow	10	9	8	8	36	Yellow	10	10	10	10
		1	White	1	1	1	0		White	1	1	1	1
		1	USD	1	1	1	0		USD	1	1	1	1
	Total	**12**		**12**	**11**	**10**	**8**			**12**	**12**	**12**	**12**
36	Deghri	1	USD	0	0	1	1	37	USD	0	1	0	1
		10	Reserved	10	10	10	10		Reserved	8	8	8	7
		1	15/30 Min	1	1	1	1		15/30 Min	1	0	0	0
	Total	**12**		**11**	**11**	**12**	**12**			**9**	**9**	**8**	**8**
37	Mission Structure	911	White	793	826	755	726	38	White	711	796	812	721
		20	Disabled	4	4	4	2		Disabled	2	4	3	1
		28	Carpool	17	27	27	27		Carpool	12	28	28	28
		2	M/C	0	2	2	2		M/C	2	2	2	2
	Total	**961**		**814**	**859**	**788**	**757**			**727**	**830**	**845**	**752**
38	Mission B Lot	90	White	70	65	60	24	39	White	67	71	69	67
		3	Disabled	0	0	1	3		Disabled	0	0	0	0
		1	Reserved	1	0	0	1		Reserved	0	0	0	1
	Total	**94**		**71**	**65**	**61**	**28**			**67**	**71**	**69**	**68**
39	San Dimas Avenue	33	White	9	26	23	20	40	White	19	22	22	23
		1	USD	0	0	0	0		USD	0	1	1	0
		1	Reserved	0	1	0	0		Reserved	0	0	0	0
		2	15/30 Min	0	0	0	0		15/30 Min	0	0	0	0
	Total	**37**		**9**	**27**	**23**	**20**			**19**	**23**	**23**	**23**
40	Santa Paula Aveue	**6**	White	**5**	**6**	**6**	**6**	41	White	**6**	**6**	**6**	**6**
41	SAPS Garage	5	White	5	5	2	5	42	White	4	5	5	4
		1	Disabled	0	0	0	0		Disabled	0	0	0	0
		1	USD	0	0	0	0		USD	1	0	0	1
		8	Reserved	2	2	5	2		Reserved	3	3	2	2
		1	M/C	0	0	1	1		M/C	1	1	1	1
	Total	**16**		**7**	**7**	**8**	**8**			**9**	**9**	**8**	**8**
42	San Buenaventure	99	White	97	93	98	92	43	White	94	90	91	88
		2	Disabled	0	0	1	1		Disabled	1	1	1	1
		10	Reserved	9	10	10	10		Reserved	2	1	1	1
		2	15/30 Min	0	0	0	0		15/30 Min	0	0	0	0
	Total	**113**		**106**	**103**	**109**	**103**			**97**	**92**	**93**	**90**
43	JCP Circle	**3**	15/30 Min	**0**	**2**	**3**	**2**	44	15/30 Min	**1**	**3**	**3**	**3**
44	JCP W	26	Yellow	24	22	26	24	45	Yellow	26	25	26	22
		22	White	16	18	22	20		White	22	22	22	17
		3	Disabled	1	2	1	1		Disabled	0	0	0	0
		2	USD	1	1	1	0		USD	1	1	1	1
		5	Reserved	3	3	4	0		Reserved	2	3	3	5
	Total	**58**		**45**	**46**	**54**	**45**			**51**	**51**	**52**	**45**
45	JCP N.	1	White	1	0	0	0	46	White	1	1	1	0
		2	Disabled	0	0	0	0		Disabled	0	1	1	1
		2	Reserved	0	2	2	2		Reserved	2	2	2	2
	Total	**5**		**1**	**2**	**2**	**2**			**3**	**4**	**4**	**3**
46	Fowler Park	2	Yellow	1	2	2	2	47	Yellow	1	2	2	2
		1	USD	0	0	0	0		USD	0	0	0	0
	Total	**3**		**1**	**2**	**2**	**2**			**1**	**2**	**2**	**2**
47	Softball Field	64	White	26	14	16	29	48	White	4	4	24	16
		4	Disabled	0	0	0	0		Disabled	0	0	0	0
		1	Reserved	0	0	1	0		Reserved	0	0	0	0
	Total	**69**		**26**	**14**	**17**	**29**			**4**	**4**	**24**	**16**
48	Manchester North	80	White	27	21	21	19	49	White	20	20	19	18
		4	Disabled	2	2	2	2		Disabled	2	2	2	2
		3	Reserved	0	1	1	1		Reserved	2	2	1	1
	Total	**87**		**29**	**24**	**24**	**22**			**24**	**24**	**22**	**21**
49	Manchester CDC	17	White	13	15	14	15	50	White	13	15	13	12
		2	Disabled	0	0	0	0		Disabled	0	0	0	0
		15	Reserved	2	6	6	7		Reserved	8	7	7	7
		4	15/30 Min	4	0	0	0		15/30 Min	0	1	0	0
	Total	**38**		**19**	**21**	**20**	**22**			**21**	**23**	**20**	**19**
50	Manchester South	174	White	118	122	113	112	51	White	119	111	115	118
		5	Disabled	1	0	1	0		Disabled	1	0	0	0
		3	Reserved	0	0	0	0		Reserved	0	0	0	0
		4	M/C	3	3	3	4		M/C	3	4	4	4
	Total	**186**		**122**	**125**	**117**	**116**			**123**	**115**	**119**	**122**
51	Vistas N. Lot	141	White	40	49	62	49	52	White	39	45	64	47
		1	Disabled	0	1	0	0		Disabled	0	1	1	1
		1	USD	0	0	0	0		USD	0	0	1	1
		8	Visitor	1	1	2	0		Visitor	2	2	2	1
	Total	**151**		**41**	**51**	**64**	**49**			**41**	**48**	**68**	**50**
52	Vistas E. Lot	94	White	82	77	82	80	53	White	77	84	84	78
		2	Disabled	0	0	0	0		Disabled	0	0	0	0
		4	Reserved	2	2	2	2		Reserved	3	3	1	2
		1	15/30 Min	0	0	0	0		15/30 Min	0	0	0	0
		2	M/C	0	0	0	0		M/C	0	0	0	0
	Total	**103**		**84**	**79**	**84**	**82**			**80**	**87**	**85**	**80**
53	Vistas W. Lot	170	White	142	148	145	139	54	White	162	161	152	157
		3	Disabled	0	0	0	0		Disabled	0	0	0	0
		2	USD	0	0	0	0		USD	1	0	0	0
		7	Reserved	3	2	4	5		Reserved	4	4	3	5
		9	Visitor	4	0	6	0		Visitor	3	4	3	4
		2	M/C	0	0	0	0		M/C	0	0	0	0
	Total	**193**		**149**	**150**	**155**	**144**			**170**	**169**	**158**	**166**
54	Sports Center North Lot	43	Yellow	35	39	37	29	55	Yellow	35	37	33	32
		1	Disabled	0	0	0	0		Disabled	0	0	1	0
		12	USD	10	11	11	10		USD	12	9	11	12
	Total	**56**		**45**	**50**	**48**	**39**			**47**	**46**	**45**	**44**
	GRAND TOTAL	**5384**		**3645**	**3764**	**3575**	**3556**			**3245**	**3639**	**3776**	**3623**

TABLE 10-2
RECOMMENDED ADDITIONAL PARKING SPACES PER FTE

Increase in FTE	Recommended Additional Parking Spaces	Recommended Total Parking Supply[a]
750 (Near-Term)	-	5,384
900	-	5,384
1,050	-	5,384
1,200	-	5,384
1,350	-	5,384
1,500	-	5,384
1,650	-	5,384
1,800	71	5,455
1,950	164	5,548
2,100	257	5,641
2,250	350	5,734
2,400	443	5,827
2,550	536	5,920
2,700	629	6,013
2,850	722	6,106
3,000	815	6,199

Footnotes:

a. Based on the observed Existing supply of 5,384 parking spaces. Additional parking spaces are not calculated to be needed until approximately 1,800 additional FTE are enrolled

- USD has a 7,000 FTE student maximum per the existing CUP. Based on this number, the current parking demand (based on the highest observed demand at 1:30 PM on October 8th) is 0.539 parking spaces / FTE.

- Based on the parking inventory survey, it was determined that a total of 5,384 parking spaces are currently provided on the USD Campus.

- The standard of practice in traffic engineering is to consider a parking area "full" when it reaches 85% of its capacity.

Additional 750 FTE + 7,000 Existing FTE = 7,750 FTE x 0.539 parking spaces per FTE = 4,177 parking spaces x 15% to account for 85% occupancy = 4,804 spaces recommended (less than currently provided).

Additional 900 FTE + 7,000 Existing FTE = 7,900 FTE x 0.539 parking spaces per FTE = 4,258 parking spaces x 15% to account for 85% occupancy = 4,897 spaces recommended (less than currently provided).

Additional 1,050 FTE + 7,000 Existing FTE = 8,050 FTE x 0.539 parking spaces per FTE = 4,339 parking spaces x 15% to account for 85% occupancy = 4,990 spaces recommended (less than currently provided).

Additional 1,200 FTE + 7,000 Existing FTE = 8,200 FTE x 0.539 parking spaces per FTE = 4,420 parking spaces x 15% to account for 85% occupancy = 5,083 spaces recommended (less than currently provided).

Additional 1,350 FTE + 7,000 Existing FTE = 8,350 FTE x 0.539 parking spaces per FTE = 4,501 parking spaces x 15% to account for 85% occupancy = 5,176 spaces recommended (less than currently provided).

Additional 1,500 FTE + 7,000 Existing FTE = 8,500 FTE x 0.539 parking spaces per FTE = 4,582 parking spaces x 15% to account for 85% occupancy = 5,269 spaces recommended (less than currently provided).

Additional 1,650 FTE + 7,000 Existing FTE = 8,650 FTE x 0.539 parking spaces per FTE = 4,662 parking spaces x 15% to account for 85% occupancy = 5,361 spaces recommended (less than currently provided).

Additional 1,800 FTE + 7,000 Existing FTE = 8,800 FTE x 0.539 parking spaces per FTE = 4,743 parking spaces x 15% to account for 85% occupancy = 5,455 spaces recommended (71 more than currently provided).

Additional 1,950 FTE + 7,000 Existing FTE = 8,950 FTE x 0.539 parking spaces per FTE = 4,824 parking spaces x 15% to account for 85% occupancy = 5,548 spaces recommended (164 more than currently provided).

Additional 2,100 FTE + 7,000 Existing FTE = 9,100 FTE x 0.539 parking spaces per FTE = 4,905 parking spaces x 15% to account for 85% occupancy = 5,641 spaces recommended (257 more than currently provided).

Additional 2,250 FTE + 7,000 Existing FTE = 9,250 FTE x 0.539 parking spaces per FTE = 4,986 parking spaces x 15% to account for 85% occupancy = 5,734 spaces recommended (350 more than currently provided).

Additional 2,400 FTE + 7,000 Existing FTE = 9,400 FTE x 0.539 parking spaces per FTE = 5,067 parking spaces x 15% to account for 85% occupancy = 5,827 spaces recommended (443 more than currently provided).

Additional 2,550 FTE + 7,000 Existing FTE = 9,550 FTE x 0.539 parking spaces per FTE = 5,147 parking spaces x 15% to account for 85% occupancy = 5,920 spaces recommended (536 more than currently provided).

Additional 2,700 FTE + 7,000 Existing FTE = 9,700 FTE x 0.539 parking spaces per FTE = 5,228 parking spaces x 15% to account for 85% occupancy = 6,013 spaces recommended (629 more than currently provided).

Additional 2,850 FTE + 7,000 Existing FTE = 9,850 FTE x 0.539 parking spaces per FTE = 5,309 parking spaces x 15% to account for 85% occupancy = 6,106 spaces recommended (722 more than currently provided).

Additional 3,000 FTE + 7,000 Existing FTE = 10,000 FTE x 0.539 parking spaces per FTE = 5,390 parking spaces x 15% to account for 85% occupancy = 6,199 spaces recommended (815 more than currently provided).

APPENDIX L

POST-MITIGATION INTERSECTION ANALYSIS WORKSHEETS

Movement	EBT	EBR	WBL	WBT	NBL	NBR
Lane Configurations						
Volume (veh/h)	895	48	52	802	24	31
Number	2	12	1	6	3	18
Initial Q (Qb), veh	0	0	0	0	0	0
Ped-Bike Adj(A_pbT)		0.96	1.00		1.00	1.00
Parking Bus, Adj	1.00	1.00	1.00	1.00	1.00	1.00
Adj Sat Flow, veh/h/ln	1863	1900	1863	1863	1863	1863
Adj Flow Rate, veh/h	1065	57	62	955	29	37
Adj No. of Lanes	2	0	1	2	1	1
Peak Hour Factor	0.84	0.84	0.84	0.84	0.84	0.84
Percent Heavy Veh, %	2	2	2	2	2	2
Cap, veh/h	2246	120	83	2787	86	77
Arrive On Green	0.66	0.66	0.05	0.79	0.05	0.05
Sat Flow, veh/h	3502	182	1774	3632	1774	1583
Grp Volume(v), veh/h	553	569	62	955	29	37
Grp Sat Flow(s),veh/h/ln	1770	1822	1774	1770	1774	1583
Q Serve(g_s), s	7.6	7.6	1.7	3.8	0.8	1.1
Cycle Q Clear(g_c), s	7.6	7.6	1.7	3.8	0.8	1.1
Prop In Lane		0.10	1.00		1.00	1.00
Lane Grp Cap(c), veh/h	1166	1201	83	2787	86	77
V/C Ratio(X)	0.47	0.47	0.75	0.34	0.34	0.48
Avail Cap(c_a), veh/h	1850	1904	364	4715	618	552
HCM Platoon Ratio	1.00	1.00	1.00	1.00	1.00	1.00
Upstream Filter(I)	1.00	1.00	1.00	1.00	1.00	1.00
Uniform Delay (d), s/veh	4.1	4.1	23.0	1.5	22.5	22.6
Incr Delay (d2), s/veh	0.3	0.3	12.7	0.1	2.3	4.6
Initial Q Delay(d3),s/veh	0.0	0.0	0.0	0.0	0.0	0.0
%ile BackOfQ(50%),veh/ln	3.6	3.7	1.1	1.8	0.4	0.6
LnGrp Delay(d),s/veh	4.4	4.4	35.7	1.6	24.7	27.2
LnGrp LOS	A	A	D	A	C	C
Approach Vol, veh/h	1122			1017	66	
Approach Delay, s/veh	4.4			3.7	26.1	
Approach LOS	A			A	C	

Timer	1	2	3	4	5	6	7	8
Assigned Phs	1	2				6		8
Phs Duration (G+Y+Rc), s	6.3	36.2				42.4		6.4
Change Period (Y+Rc), s	4.0	4.0				4.0		4.0
Max Green Setting (Gmax), s	10.0	51.0				65.0		17.0
Max Q Clear Time (g_c+I1), s	3.7	9.6				5.8		3.1
Green Ext Time (p_c), s	0.0	22.6				26.6		0.1

Intersection Summary	
HCM 2010 Ctrl Delay	4.7
HCM 2010 LOS	A

Movement	EBT	EBR	WBL	WBT	NBL	NBR
Lane Configurations						
Volume (veh/h)	895	48	52	802	24	31
Number	2	12	1	6	3	18
Initial Q (Qb), veh	0	0	0	0	0	0
Ped-Bike Adj(A_pbT)		0.96	1.00		1.00	0.99
Parking Bus, Adj	1.00	1.00	1.00	1.00	1.00	1.00
Adj Sat Flow, veh/h/ln	1863	1900	1863	1863	1863	1900
Adj Flow Rate, veh/h	1065	57	62	955	29	37
Adj No. of Lanes	2	0	1	2	0	0
Peak Hour Factor	0.84	0.84	0.84	0.84	0.84	0.84
Percent Heavy Veh, %	2	2	2	2	0	0
Cap, veh/h	2266	121	82	2799	35	45
Arrive On Green	0.66	0.66	0.05	0.79	0.05	0.05
Sat Flow, veh/h	3502	182	1774	3632	714	911
Grp Volume(v), veh/h	553	569	62	955	67	0
Grp Sat Flow(s),veh/h/ln	1770	1822	1774	1770	1650	0
Q Serve(g_s), s	7.6	7.6	1.7	3.9	2.0	0.0
Cycle Q Clear(g_c), s	7.6	7.6	1.7	3.9	2.0	0.0
Prop In Lane		0.10	1.00		0.43	0.55
Lane Grp Cap(c), veh/h	1176	1211	82	2799	81	0
V/C Ratio(X)	0.47	0.47	0.76	0.34	0.82	0.00
Avail Cap(c_a), veh/h	1944	2001	425	5019	363	0
HCM Platoon Ratio	1.00	1.00	1.00	1.00	1.00	1.00
Upstream Filter(I)	1.00	1.00	1.00	1.00	1.00	0.00
Uniform Delay (d), s/veh	4.1	4.1	23.6	1.5	23.6	0.0
Incr Delay (d2), s/veh	0.3	0.3	13.2	0.1	18.0	0.0
Initial Q Delay(d3),s/veh	0.0	0.0	0.0	0.0	0.0	0.0
%ile BackOfQ(50%),veh/ln	3.6	3.7	1.1	1.9	1.3	0.0
LnGrp Delay(d),s/veh	4.4	4.4	36.8	1.6	41.6	0.0
LnGrp LOS	A	A	D	A	D	
Approach Vol, veh/h	1122			1017	67	
Approach Delay, s/veh	4.4			3.7	41.6	
Approach LOS	A			A	D	

Timer	1	2	3	4	5	6	7	8
Assigned Phs	1	2				6		8
Phs Duration (G+Y+Rc), s	6.3	37.3				43.6		6.5
Change Period (Y+Rc), s	4.0	4.0				4.0		4.0
Max Green Setting (Gmax), s	12.0	55.0				71.0		11.0
Max Q Clear Time (g_c+I1), s	3.7	9.6				5.9		4.0
Green Ext Time (p_c), s	0.1	23.7				27.5		0.1

Intersection Summary	
HCM 2010 Ctrl Delay	5.2
HCM 2010 LOS	A

Notes

User approved volume balancing among the lanes for turning movement.

Movement	EBL	EBT	WBT	WBR	SBL	SBR
Lane Configurations						
Volume (veh/h)	64	937	717	18	35	85
Number	5	2	6	16	7	14
Initial Q (Qb), veh	0	0	0	0	0	0
Ped-Bike Adj(A_pbT)	1.00			0.97	1.00	1.00
Parking Bus, Adj	1.00	1.00	1.00	1.00	1.00	1.00
Adj Sat Flow, veh/h/ln	1863	1863	1863	1900	1863	1863
Adj Flow Rate, veh/h	74	1077	824	21	40	98
Adj No. of Lanes	1	2	2	0	1	1
Peak Hour Factor	0.87	0.87	0.87	0.87	0.87	0.87
Percent Heavy Veh, %	2	2	2	2	2	2
Cap, veh/h	95	2595	2086	53	162	145
Arrive On Green	0.05	0.73	0.59	0.59	0.09	0.09
Sat Flow, veh/h	1774	3632	3617	90	1774	1583
Grp Volume(v), veh/h	74	1077	414	431	40	98
Grp Sat Flow(s),veh/h/ln	1774	1770	1770	1844	1774	1583
Q Serve(g_s), s	1.9	5.3	5.7	5.7	1.0	2.7
Cycle Q Clear(g_c), s	1.9	5.3	5.7	5.7	1.0	2.7
Prop In Lane	1.00			0.05	1.00	1.00
Lane Grp Cap(c), veh/h	95	2595	1048	1092	162	145
V/C Ratio(X)	0.78	0.42	0.39	0.40	0.25	0.68
Avail Cap(c_a), veh/h	506	4811	1746	1819	778	694
HCM Platoon Ratio	1.00	1.00	1.00	1.00	1.00	1.00
Upstream Filter(I)	1.00	1.00	1.00	1.00	1.00	1.00
Uniform Delay (d), s/veh	21.3	2.3	5.0	5.0	19.3	20.1
Incr Delay (d2), s/veh	13.0	0.1	0.2	0.2	0.8	5.4
Initial Q Delay(d3),s/veh	0.0	0.0	0.0	0.0	0.0	0.0
%ile BackOfQ(50%),veh/ln	1.2	2.6	2.8	2.9	0.5	2.6
LnGrp Delay(d),s/veh	34.3	2.4	5.2	5.2	20.0	25.5
LnGrp LOS	C	A	A	A	C	C
Approach Vol, veh/h		1151	845		138	
Approach Delay, s/veh		4.5	5.2		23.9	
Approach LOS		A	A		C	

Timer	1	2	3	4	5	6	7	8
Assigned Phs		2		4	5	6		
Phs Duration (G+Y+Rc), s		37.4		8.2	6.4	31.0		
Change Period (Y+Rc), s		4.0		4.0	4.0	4.0		
Max Green Setting (Gmax), s		62.0		20.0	13.0	45.0		
Max Q Clear Time (g_c+I1), s		7.3		4.7	3.9	7.7		
Green Ext Time (p_c), s		22.7		0.3	0.1	19.3		

Intersection Summary	
HCM 2010 Ctrl Delay	6.0
HCM 2010 LOS	A

Intersection	
Int Delay, s/veh	0.9

Movement	EBL	EBT	WBT	WBR	SBL	SBR
Traffic Vol, veh/h	64	972	717	18	0	85
Future Vol, veh/h	64	972	717	18	0	85
Conflicting Peds, #/hr	0	0	0	3	0	0
Sign Control	Free	Free	Free	Free	Stop	Stop
RT Channelized	-	None	-	None	-	None
Storage Length	140	-	-	-	-	0
Veh in Median Storage, #	-	0	0	-	0	-
Grade, %	-	0	0	-	0	-
Peak Hour Factor	87	87	87	87	87	87
Heavy Vehicles, %	2	2	2	2	2	2
Mvmt Flow	74	1117	824	21	0	98

Major/Minor	Major1		Major2		Minor2	
Conflicting Flow All	845	0	-	0	1540	422
Stage 1	-	-	-	-	834	-
Stage 2	-	-	-	-	706	-
Critical Hdwy	4.14	-	-	-	6.84	6.94
Critical Hdwy Stg 1	-	-	-	-	5.84	-
Critical Hdwy Stg 2	-	-	-	-	5.84	-
Follow-up Hdwy	2.22	-	-	-	3.52	3.32
Pot Cap-1 Maneuver	787	-	-	-	106	580
Stage 1	-	-	-	-	387	-
Stage 2	-	-	-	-	450	-
Platoon blocked, %		-	-	-		
Mov Cap-1 Maneuver	787	-	-	-	96	580
Mov Cap-2 Maneuver	-	-	-	-	96	-
Stage 1	-	-	-	-	387	-
Stage 2	-	-	-	-	408	-

Approach	EB	WB	SB
HCM Control Delay, s	0.6	0	12.5
HCM LOS			B

Minor Lane/Major Mvmt	EBL	EBT	WBT	WBR	SBLn1
Capacity (veh/h)	787	-	-	-	580
HCM Lane V/C Ratio	0.093	-	-	-	0.168
HCM Control Delay (s)	10	-	-	-	12.5
HCM Lane LOS	B	-	-	-	B
HCM 95th %tile Q(veh)	0.3	-	-	-	0.6

HCM 2010 Signalized Intersection Summary
12: Pacific Ridge Dwy/Alcala Pkwy & Linda Vista Rd

10/26/2016

Movement	EBL	EBT	EBR	WBL	WBT	WBR	NBL	NBT	NBR	SBL	SBT	SBR
Lane Configurations												
Traffic Volume (veh/h)	243	497	44	24	690	242	167	14	102	32	5	37
Future Volume (veh/h)	243	497	44	24	690	242	167	14	102	32	5	37
Number	5	2	12	1	6	16	3	8	18	7	4	14
Initial Q (Qb), veh	0	0	0	0	0	0	0	0	0	0	0	0
Ped-Bike Adj(A_pbT)	1.00		0.97	1.00		0.98	1.00		0.98	1.00		0.88
Parking Bus, Adj	1.00	1.00	1.00	1.00	1.00	1.00	1.00	1.00	1.00	1.00	1.00	1.00
Adj Sat Flow, veh/h/ln	1863	1863	1900	1863	1863	1863	1863	1863	1900	1863	1863	1863
Adj Flow Rate, veh/h	286	585	52	28	812	285	196	16	120	42	0	44
Adj No. of Lanes	1	2	0	1	2	1	1	1	0	2	0	1
Peak Hour Factor	0.85	0.85	0.85	0.85	0.85	0.85	0.85	0.85	0.85	0.85	0.85	0.85
Percent Heavy Veh, %	2	2	2	2	2	2	2	2	2	2	2	2
Cap, veh/h	284	1794	159	338	1228	837	229	24	181	665	0	261
Arrive On Green	0.05	0.18	0.18	0.11	0.11	0.11	0.13	0.13	0.13	0.19	0.00	0.19
Sat Flow, veh/h	1774	3280	291	787	3539	1557	1774	187	1402	3548	0	1393
Grp Volume(v), veh/h	286	315	322	28	812	285	196	0	136	42	0	44
Grp Sat Flow(s),veh/h/ln	1774	1770	1802	787	1770	1557	1774	0	1589	1774	0	1393
Q Serve(g_s), s	17.6	17.0	17.1	3.5	24.2	13.5	11.9	0.0	9.0	1.1	0.0	2.9
Cycle Q Clear(g_c), s	17.6	17.0	17.1	3.5	24.2	13.5	11.9	0.0	9.0	1.1	0.0	2.9
Prop In Lane	1.00		0.16	1.00		1.00	1.00		0.88	1.00		1.00
Lane Grp Cap(c), veh/h	284	968	985	338	1228	837	229	0	205	665	0	261
V/C Ratio(X)	1.01	0.33	0.33	0.08	0.66	0.34	0.86	0.00	0.66	0.06	0.00	0.17
Avail Cap(c_a), veh/h	284	968	985	338	1228	837	258	0	231	871	0	342
HCM Platoon Ratio	0.33	0.33	0.33	0.33	0.33	0.33	1.00	1.00	1.00	1.00	1.00	1.00
Upstream Filter(I)	1.00	1.00	1.00	1.00	1.00	1.00	1.00	0.00	1.00	1.00	0.00	1.00
Uniform Delay (d), s/veh	52.1	27.4	27.4	33.4	42.5	20.4	46.9	0.0	45.6	36.7	0.0	37.5
Incr Delay (d2), s/veh	55.4	0.9	0.9	0.1	1.4	0.3	21.7	0.0	5.9	0.0	0.0	0.1
Initial Q Delay(d3),s/veh	0.0	0.0	0.0	0.0	0.0	0.0	0.0	0.0	0.0	0.0	0.0	0.0
%ile BackOfQ(50%),veh/ln	13.0	8.6	8.8	0.8	12.1	8.3	7.2	0.0	4.3	0.5	0.0	1.1
LnGrp Delay(d),s/veh	107.5	28.3	28.3	33.5	43.9	20.7	68.6	0.0	51.5	36.8	0.0	37.6
LnGrp LOS	F	C	C	C	D	C	E		D	D		D
Approach Vol, veh/h		923			1125			332			86	
Approach Delay, s/veh		52.8			37.8			61.6			37.2	
Approach LOS		D			D			E			D	

Timer	1	2	3	4	5	6	7	8
Assigned Phs		2		4	5	6		8
Phs Duration (G+Y+Rc), s		66.3		25.5	22.0	44.3		18.2
Change Period (Y+Rc), s		* 6.1		4.9	4.4	6.1		4.0
Max Green Setting (Gmax), s		* 53		27.0	17.6	30.0		16.0
Max Q Clear Time (g_c+I1), s		19.1		4.9	19.6	26.2		13.9
Green Ext Time (p_c), s		17.0		0.1	0.0	3.2		0.3

Intersection Summary	
HCM 2010 Ctrl Delay	46.6
HCM 2010 LOS	D

Notes

HCM 2010 Signalized Intersection Summary
12: Pacific Ridge Dwy/Alcala Pkwy & Linda Vista Rd

10/26/2016

Movement	EBL	EBT	EBR	WBL	WBT	WBR	NBL	NBT	NBR	SBL	SBT	SBR
Lane Configurations												
Traffic Volume (veh/h)	187	708	200	130	601	157	103	47	77	288	28	241
Future Volume (veh/h)	187	708	200	130	601	157	103	47	77	288	28	241
Number	5	2	12	1	6	16	3	8	18	7	4	14
Initial Q (Qb), veh	0	0	0	0	0	0	0	0	0	0	0	0
Ped-Bike Adj(A_pbT)	1.00		0.97	1.00		0.98	1.00		0.98	1.00		0.90
Parking Bus, Adj	1.00	1.00	1.00	1.00	1.00	1.00	1.00	1.00	1.00	1.00	1.00	1.00
Adj Sat Flow, veh/h/ln	1863	1863	1900	1863	1863	1863	1863	1863	1900	1863	1863	1863
Adj Flow Rate, veh/h	201	761	215	140	646	169	111	51	83	331	0	259
Adj No. of Lanes	1	2	0	1	2	1	1	1	0	2	0	1
Peak Hour Factor	0.93	0.93	0.93	0.93	0.93	0.93	0.93	0.93	0.93	0.93	0.93	0.93
Percent Heavy Veh, %	2	2	2	2	2	2	2	2	2	2	2	2
Cap, veh/h	231	1441	407	266	1280	927	180	64	104	816	0	329
Arrive On Green	0.13	0.53	0.53	0.36	0.36	0.36	0.10	0.10	0.10	0.23	0.00	0.23
Sat Flow, veh/h	1774	2707	765	573	3539	1557	1774	632	1029	3548	0	1428
Grp Volume(v), veh/h	201	498	478	140	646	169	111	0	134	331	0	259
Grp Sat Flow(s),veh/h/ln	1774	1770	1702	573	1770	1557	1774	0	1661	1774	0	1428
Q Serve(g_s), s	12.2	20.1	20.1	23.1	15.7	5.5	6.6	0.0	8.7	8.7	0.0	18.8
Cycle Q Clear(g_c), s	12.2	20.1	20.1	24.5	15.7	5.5	6.6	0.0	8.7	8.7	0.0	18.8
Prop In Lane	1.00		0.45	1.00		1.00	1.00		0.62	1.00		1.00
Lane Grp Cap(c), veh/h	231	942	906	266	1280	927	180	0	168	816	0	329
V/C Ratio(X)	0.87	0.53	0.53	0.53	0.50	0.18	0.62	0.00	0.80	0.41	0.00	0.79
Avail Cap(c_a), veh/h	284	942	906	266	1280	927	258	0	242	871	0	351
HCM Platoon Ratio	1.00	1.00	1.00	1.00	1.00	1.00	1.00	1.00	1.00	1.00	1.00	1.00
Upstream Filter(I)	1.00	1.00	1.00	1.00	1.00	1.00	1.00	0.00	1.00	1.00	0.00	1.00
Uniform Delay (d), s/veh	46.9	16.7	16.7	30.8	27.4	10.3	47.4	0.0	48.3	36.0	0.0	39.8
Incr Delay (d2), s/veh	19.6	2.1	2.2	2.2	0.4	0.1	3.4	0.0	11.2	0.1	0.0	9.6
Initial Q Delay(d3),s/veh	0.0	0.0	0.0	0.0	0.0	0.0	0.0	0.0	0.0	0.0	0.0	0.0
%ile BackOfQ(50%),veh/ln	7.2	10.4	10.0	3.8	7.7	3.7	3.4	0.0	4.5	4.3	0.0	8.3
LnGrp Delay(d),s/veh	66.5	18.9	18.9	33.0	27.8	10.4	50.8	0.0	59.5	36.1	0.0	49.4
LnGrp LOS	E	B	B	C	C	B	D		E	D		D
Approach Vol, veh/h		1177			955			245			590	
Approach Delay, s/veh		27.0			25.5			55.6			41.9	
Approach LOS		C			C			E			D	

Timer	1	2	3	4	5	6	7	8
Assigned Phs		2		4	5	6		8
Phs Duration (G+Y+Rc), s		64.7		30.2	18.8	45.9		15.1
Change Period (Y+Rc), s		* 6.1		4.9	4.4	6.1		4.0
Max Green Setting (Gmax), s		* 53		27.0	17.6	30.0		16.0
Max Q Clear Time (g_c+I1), s		22.1		20.8	14.2	26.5		10.7
Green Ext Time (p_c), s		19.2		0.8	0.1	3.1		0.5

Intersection Summary	
HCM 2010 Ctrl Delay	31.9
HCM 2010 LOS	C

Notes

Movement	EBT	EBR	WBL	WBT	NBL	NBR
Lane Configurations						
Volume (veh/h)	678	21	40	739	73	88
Number	2	12	1	6	3	18
Initial Q (Qb), veh	0	0	0	0	0	0
Ped-Bike Adj(A_pbT)		0.96	1.00		1.00	1.00
Parking Bus, Adj	1.00	1.00	1.00	1.00	1.00	1.00
Adj Sat Flow, veh/h/ln	1863	1900	1863	1863	1863	1863
Adj Flow Rate, veh/h	807	25	48	880	87	105
Adj No. of Lanes	2	0	1	2	1	1
Peak Hour Factor	0.84	0.84	0.84	0.84	0.84	0.84
Percent Heavy Veh, %	2	2	2	2	2	2
Cap, veh/h	1987	62	72	2485	196	175
Arrive On Green	0.57	0.57	0.04	0.70	0.11	0.11
Sat Flow, veh/h	3592	108	1774	3632	1774	1583
Grp Volume(v), veh/h	408	424	48	880	87	105
Grp Sat Flow(s),veh/h/ln	1770	1838	1774	1770	1774	1583
Q Serve(g_s), s	5.5	5.5	1.1	4.2	2.0	2.7
Cycle Q Clear(g_c), s	5.5	5.5	1.1	4.2	2.0	2.7
Prop In Lane		0.06	1.00		1.00	1.00
Lane Grp Cap(c), veh/h	1005	1044	72	2485	196	175
V/C Ratio(X)	0.41	0.41	0.67	0.35	0.44	0.60
Avail Cap(c_a), veh/h	1950	2025	541	5310	1164	1039
HCM Platoon Ratio	1.00	1.00	1.00	1.00	1.00	1.00
Upstream Filter(I)	1.00	1.00	1.00	1.00	1.00	1.00
Uniform Delay (d), s/veh	5.2	5.2	20.2	2.5	17.8	18.1
Incr Delay (d2), s/veh	0.3	0.3	10.0	0.1	1.6	3.3
Initial Q Delay(d3),s/veh	0.0	0.0	0.0	0.0	0.0	0.0
%ile BackOfQ(50%),veh/ln	2.7	2.8	0.7	2.0	1.0	1.3
LnGrp Delay(d),s/veh	5.4	5.4	30.2	2.6	19.3	21.4
LnGrp LOS	A	A	C	A	B	C
Approach Vol, veh/h	832			928	192	
Approach Delay, s/veh	5.4			4.0	20.5	
Approach LOS	A			A	C	

Timer	1	2	3	4	5	6	7	8
Assigned Phs	1	2				6		8
Phs Duration (G+Y+Rc), s	5.7	28.2				34.0		8.7
Change Period (Y+Rc), s	4.0	4.0				4.0		4.0
Max Green Setting (Gmax), s	13.0	47.0				64.0		28.0
Max Q Clear Time (g_c+I1), s	3.1	7.5				6.2		4.7
Green Ext Time (p_c), s	0.0	16.7				18.8		0.5

Intersection Summary	
HCM 2010 Ctrl Delay	6.2
HCM 2010 LOS	A

Movement	EBT	EBR	WBL	WBT	NBL	NBR
Lane Configurations						
Volume (veh/h)	678	21	40	739	73	88
Number	2	12	1	6	3	18
Initial Q (Qb), veh	0	0	0	0	0	0
Ped-Bike Adj(A_pbT)		0.96	1.00		1.00	0.99
Parking Bus, Adj	1.00	1.00	1.00	1.00	1.00	1.00
Adj Sat Flow, veh/h/ln	1863	1900	1863	1863	1863	1900
Adj Flow Rate, veh/h	807	25	48	880	87	105
Adj No. of Lanes	2	0	1	2	0	0
Peak Hour Factor	0.84	0.84	0.84	0.84	0.84	0.84
Percent Heavy Veh, %	2	2	2	2	0	0
Cap, veh/h	1912	59	71	2382	114	138
Arrive On Green	0.55	0.55	0.04	0.67	0.15	0.15
Sat Flow, veh/h	3592	108	1774	3632	745	899
Grp Volume(v), veh/h	408	424	48	880	193	0
Grp Sat Flow(s),veh/h/ln	1770	1838	1774	1770	1652	0
Q Serve(g_s), s	6.3	6.3	1.2	5.0	5.2	0.0
Cycle Q Clear(g_c), s	6.3	6.3	1.2	5.0	5.2	0.0
Prop In Lane		0.06	1.00		0.45	0.54
Lane Grp Cap(c), veh/h	967	1004	71	2382	253	0
V/C Ratio(X)	0.42	0.42	0.68	0.37	0.76	0.00
Avail Cap(c_a), veh/h	1883	1956	424	4919	1005	0
HCM Platoon Ratio	1.00	1.00	1.00	1.00	1.00	1.00
Upstream Filter(I)	1.00	1.00	1.00	1.00	1.00	0.00
Uniform Delay (d), s/veh	6.2	6.2	21.8	3.3	18.7	0.0
Incr Delay (d2), s/veh	0.3	0.3	10.8	0.1	4.7	0.0
Initial Q Delay(d3),s/veh	0.0	0.0	0.0	0.0	0.0	0.0
%ile BackOfQ(50%),veh/ln	3.0	3.1	0.8	2.4	2.7	0.0
LnGrp Delay(d),s/veh	6.5	6.4	32.6	3.4	23.4	0.0
LnGrp LOS	A	A	C	A	C	
Approach Vol, veh/h	832			928	193	
Approach Delay, s/veh	6.4			4.9	23.4	
Approach LOS	A			A	C	

Timer	1	2	3	4	5	6	7	8
Assigned Phs	1	2				6		8
Phs Duration (G+Y+Rc), s	5.8	29.2				35.0		11.1
Change Period (Y+Rc), s	4.0	4.0				4.0		4.0
Max Green Setting (Gmax), s	11.0	49.0				64.0		28.0
Max Q Clear Time (g_c+I1), s	3.2	8.3				7.0		7.2
Green Ext Time (p_c), s	0.0	16.9				18.7		0.6

Intersection Summary	
HCM 2010 Ctrl Delay	7.4
HCM 2010 LOS	A

Notes

User approved volume balancing among the lanes for turning movement.

Movement	EBT	EBR	WBL	WBT	NBL	NBR
Lane Configurations						
Volume (veh/h)	1029	71	92	920	39	57
Number	2	12	1	6	3	18
Initial Q (Qb), veh	0	0	0	0	0	0
Ped-Bike Adj(A_pbT)		0.96	1.00		1.00	1.00
Parking Bus, Adj	1.00	1.00	1.00	1.00	1.00	1.00
Adj Sat Flow, veh/h/ln	1863	1900	1863	1863	1863	1863
Adj Flow Rate, veh/h	1225	85	110	1095	46	68
Adj No. of Lanes	2	0	1	2	1	1
Peak Hour Factor	0.84	0.84	0.84	0.84	0.84	0.84
Percent Heavy Veh, %	2	2	2	2	2	2
Cap, veh/h	2173	151	144	2822	121	108
Arrive On Green	0.65	0.65	0.08	0.80	0.07	0.07
Sat Flow, veh/h	3441	232	1774	3632	1774	1583
Grp Volume(v), veh/h	646	664	110	1095	46	68
Grp Sat Flow(s),veh/h/ln	1770	1811	1774	1770	1774	1583
Q Serve(g_s), s	12.0	12.1	3.6	5.4	1.5	2.5
Cycle Q Clear(g_c), s	12.0	12.1	3.6	5.4	1.5	2.5
Prop In Lane		0.13	1.00		1.00	1.00
Lane Grp Cap(c), veh/h	1149	1175	144	2822	121	108
V/C Ratio(X)	0.56	0.56	0.76	0.39	0.38	0.63
Avail Cap(c_a), veh/h	1459	1492	418	3989	746	666
HCM Platoon Ratio	1.00	1.00	1.00	1.00	1.00	1.00
Upstream Filter(I)	1.00	1.00	1.00	1.00	1.00	1.00
Uniform Delay (d), s/veh	5.8	5.8	26.8	1.8	26.5	27.0
Incr Delay (d2), s/veh	0.4	0.4	8.1	0.1	2.0	6.0
Initial Q Delay(d3),s/veh	0.0	0.0	0.0	0.0	0.0	0.0
%ile BackOfQ(50%),veh/ln	5.9	6.0	2.1	2.6	0.8	1.3
LnGrp Delay(d),s/veh	6.2	6.2	34.9	1.9	28.5	33.0
LnGrp LOS	A	A	C	A	C	C
Approach Vol, veh/h	1310			1205	114	
Approach Delay, s/veh	6.2			4.9	31.2	
Approach LOS	A			A	C	

Timer	1	2	3	4	5	6	7	8
Assigned Phs	1	2				6		8
Phs Duration (G+Y+Rc), s	8.8	42.6				51.4		8.0
Change Period (Y+Rc), s	4.0	4.0				4.0		4.0
Max Green Setting (Gmax), s	14.0	49.0				67.0		25.0
Max Q Clear Time (g_c+I1), s	5.6	14.1				7.4		4.5
Green Ext Time (p_c), s	0.1	24.5				34.3		0.3

Intersection Summary	
HCM 2010 Ctrl Delay	6.7
HCM 2010 LOS	A

Movement	EBT	EBR	WBL	WBT	NBL	NBR
Lane Configurations						
Volume (veh/h)	1029	71	92	920	39	57
Number	2	12	1	6	3	18
Initial Q (Qb), veh	0	0	0	0	0	0
Ped-Bike Adj(A_pbT)		0.96	1.00		1.00	0.99
Parking Bus, Adj	1.00	1.00	1.00	1.00	1.00	1.00
Adj Sat Flow, veh/h/ln	1863	1900	1863	1863	1863	1900
Adj Flow Rate, veh/h	1225	85	110	1095	46	68
Adj No. of Lanes	2	0	1	2	0	0
Peak Hour Factor	0.84	0.84	0.84	0.84	0.84	0.84
Percent Heavy Veh, %	2	2	2	2	0	0
Cap, veh/h	2142	148	143	2761	66	98
Arrive On Green	0.64	0.64	0.08	0.78	0.10	0.10
Sat Flow, veh/h	3441	232	1774	3632	657	971
Grp Volume(v), veh/h	646	664	110	1095	115	0
Grp Sat Flow(s),veh/h/ln	1770	1810	1774	1770	1642	0
Q Serve(g_s), s	13.9	14.0	4.1	6.6	4.5	0.0
Cycle Q Clear(g_c), s	13.9	14.0	4.1	6.6	4.5	0.0
Prop In Lane		0.13	1.00		0.40	0.59
Lane Grp Cap(c), veh/h	1132	1158	143	2761	165	0
V/C Ratio(X)	0.57	0.57	0.77	0.40	0.70	0.00
Avail Cap(c_a), veh/h	1477	1512	370	3905	441	0
HCM Platoon Ratio	1.00	1.00	1.00	1.00	1.00	1.00
Upstream Filter(I)	1.00	1.00	1.00	1.00	1.00	0.00
Uniform Delay (d), s/veh	6.9	6.9	30.2	2.3	29.2	0.0
Incr Delay (d2), s/veh	0.5	0.4	8.3	0.1	5.2	0.0
Initial Q Delay(d3),s/veh	0.0	0.0	0.0	0.0	0.0	0.0
%ile BackOfQ(50%),veh/ln	6.8	7.0	2.3	3.1	2.3	0.0
LnGrp Delay(d),s/veh	7.3	7.3	38.5	2.4	34.3	0.0
LnGrp LOS	A	A	D	A	C	
Approach Vol, veh/h	1310			1205	115	
Approach Delay, s/veh	7.3			5.7	34.3	
Approach LOS	A			A	C	

Timer	1	2	3	4	5	6	7	8
Assigned Phs	1	2				6		8
Phs Duration (G+Y+Rc), s	9.4	46.9				56.3		10.8
Change Period (Y+Rc), s	4.0	4.0				4.0		4.0
Max Green Setting (Gmax), s	14.0	56.0				74.0		18.0
Max Q Clear Time (g_c+I1), s	6.1	16.0				8.6		6.5
Green Ext Time (p_c), s	0.1	26.9				36.0		0.2

Intersection Summary	
HCM 2010 Ctrl Delay	7.8
HCM 2010 LOS	A

Notes

User approved volume balancing among the lanes for turning movement.

Movement	EBL	EBT	WBT	WBR	SBL	SBR
Lane Configurations						
Volume (veh/h)	87	608	1250	38	14	57
Number	5	2	6	16	7	14
Initial Q (Qb), veh	0	0	0	0	0	0
Ped-Bike Adj(A_pbT)	1.00			0.97	1.00	1.00
Parking Bus, Adj	1.00	1.00	1.00	1.00	1.00	1.00
Adj Sat Flow, veh/h/ln	1863	1863	1863	1900	1863	1863
Adj Flow Rate, veh/h	100	699	1437	44	16	66
Adj No. of Lanes	1	2	2	0	1	1
Peak Hour Factor	0.87	0.87	0.87	0.87	0.87	0.87
Percent Heavy Veh, %	2	2	2	2	2	2
Cap, veh/h	161	2785	2198	67	136	121
Arrive On Green	0.09	0.79	0.63	0.63	0.08	0.08
Sat Flow, veh/h	1774	3632	3596	107	1774	1583
Grp Volume(v), veh/h	100	699	725	756	16	66
Grp Sat Flow(s),veh/h/ln	1774	1770	1770	1840	1774	1583
Q Serve(g_s), s	3.2	3.1	15.1	15.2	0.5	2.4
Cycle Q Clear(g_c), s	3.2	3.1	15.1	15.2	0.5	2.4
Prop In Lane	1.00			0.06	1.00	1.00
Lane Grp Cap(c), veh/h	161	2785	1111	1155	136	121
V/C Ratio(X)	0.62	0.25	0.65	0.65	0.12	0.54
Avail Cap(c_a), veh/h	484	3986	1389	1444	484	432
HCM Platoon Ratio	1.00	1.00	1.00	1.00	1.00	1.00
Upstream Filter(I)	1.00	1.00	1.00	1.00	1.00	1.00
Uniform Delay (d), s/veh	25.7	1.7	6.9	6.9	25.2	26.1
Incr Delay (d2), s/veh	3.8	0.0	0.8	0.7	0.4	3.8
Initial Q Delay(d3),s/veh	0.0	0.0	0.0	0.0	0.0	0.0
%ile BackOfQ(50%),veh/ln	1.7	1.5	7.5	7.8	0.3	2.2
LnGrp Delay(d),s/veh	29.5	1.7	7.6	7.6	25.6	29.8
LnGrp LOS	C	A	A	A	C	C
Approach Vol, veh/h		799	1481		82	
Approach Delay, s/veh		5.2	7.6		29.0	
Approach LOS		A	A		C	

Timer	1	2	3	4	5	6	7	8
Assigned Phs		2		4	5	6		
Phs Duration (G+Y+Rc), s		50.1		8.5	9.3	40.8		
Change Period (Y+Rc), s		4.0		4.0	4.0	4.0		
Max Green Setting (Gmax), s		66.0		16.0	16.0	46.0		
Max Q Clear Time (g_c+I1), s		5.1		4.4	5.2	17.2		
Green Ext Time (p_c), s		30.1		0.1	0.2	19.6		

Intersection Summary	
HCM 2010 Ctrl Delay	7.6
HCM 2010 LOS	A

Intersection	
Int Delay, s/veh	1.1

Movement	EBL	EBT	WBT	WBR	SBL	SBR
Traffic Vol, veh/h	87	622	1250	38	0	57
Future Vol, veh/h	87	622	1250	38	0	57
Conflicting Peds, #/hr	0	0	0	3	0	0
Sign Control	Free	Free	Free	Free	Stop	Stop
RT Channelized	-	None	-	None	-	None
Storage Length	140	-	-	-	0	-
Veh in Median Storage, #	-	0	0	-	0	-
Grade, %	-	0	0	-	0	-
Peak Hour Factor	87	87	87	87	87	87
Heavy Vehicles, %	2	2	2	2	2	2
Mvmt Flow	100	715	1437	44	0	66

Major/Minor	Major1		Major2		Minor2	
Conflicting Flow All	1480	0	-	0	2016	740
Stage 1	-	-	-	-	1459	-
Stage 2	-	-	-	-	557	-
Critical Hdwy	4.14	-	-	-	6.84	6.94
Critical Hdwy Stg 1	-	-	-	-	5.84	-
Critical Hdwy Stg 2	-	-	-	-	5.84	-
Follow-up Hdwy	2.22	-	-	-	3.52	3.32
Pot Cap-1 Maneuver	451	-	-	-	51	359
Stage 1	-	-	-	-	180	-
Stage 2	-	-	-	-	537	-
Platoon blocked, %		-	-	-		
Mov Cap-1 Maneuver	451	-	-	-	40	359
Mov Cap-2 Maneuver	-	-	-	-	40	-
Stage 1	-	-	-	-	180	-
Stage 2	-	-	-	-	418	-

Approach	EB	WB	SB
HCM Control Delay, s	1.9	0	17.3
HCM LOS			C

Minor Lane/Major Mvmt	EBL	EBT	WBT	WBR	SBLn1
Capacity (veh/h)	451	-	-	-	359
HCM Lane V/C Ratio	0.222	-	-	-	0.182
HCM Control Delay (s)	15.2	-	-	-	17.3
HCM Lane LOS	C	-	-	-	C
HCM 95th %tile Q(veh)	0.8	-	-	-	0.7

Movement	EBL	EBT	WBT	WBR	SBL	SBR
Lane Configurations						
Volume (veh/h)	115	1288	957	35	64	155
Number	5	2	6	16	7	14
Initial Q (Qb), veh	0	0	0	0	0	0
Ped-Bike Adj(A_pbT)	1.00			0.97	1.00	1.00
Parking Bus, Adj	1.00	1.00	1.00	1.00	1.00	1.00
Adj Sat Flow, veh/h/ln	1863	1863	1863	1900	1863	1863
Adj Flow Rate, veh/h	132	1480	1100	40	74	178
Adj No. of Lanes	1	2	2	0	1	1
Peak Hour Factor	0.87	0.87	0.87	0.87	0.87	0.87
Percent Heavy Veh, %	2	2	2	2	2	2
Cap, veh/h	186	2607	1992	72	257	229
Arrive On Green	0.10	0.74	0.57	0.57	0.14	0.14
Sat Flow, veh/h	1774	3632	3572	126	1774	1583
Grp Volume(v), veh/h	132	1480	559	581	74	178
Grp Sat Flow(s),veh/h/ln	1774	1770	1770	1836	1774	1583
Q Serve(g_s), s	4.9	12.8	13.3	13.3	2.5	7.3
Cycle Q Clear(g_c), s	4.9	12.8	13.3	13.3	2.5	7.3
Prop In Lane	1.00			0.07	1.00	1.00
Lane Grp Cap(c), veh/h	186	2607	1013	1051	257	229
V/C Ratio(X)	0.71	0.57	0.55	0.55	0.29	0.78
Avail Cap(c_a), veh/h	447	3407	1153	1196	447	399
HCM Platoon Ratio	1.00	1.00	1.00	1.00	1.00	1.00
Upstream Filter(I)	1.00	1.00	1.00	1.00	1.00	1.00
Uniform Delay (d), s/veh	29.2	4.0	9.0	9.0	25.8	27.8
Incr Delay (d2), s/veh	4.9	0.2	0.5	0.5	0.6	5.6
Initial Q Delay(d3),s/veh	0.0	0.0	0.0	0.0	0.0	0.0
%ile BackOfQ(50%),veh/ln	2.6	6.0	6.5	6.7	1.3	6.5
LnGrp Delay(d),s/veh	34.2	4.2	9.5	9.5	26.4	33.4
LnGrp LOS	C	A	A	A	C	C
Approach Vol, veh/h		1612	1140		252	
Approach Delay, s/veh		6.7	9.5		31.3	
Approach LOS		A	A		C	

Timer	1	2	3	4	5	6	7	8
Assigned Phs		2		4	5	6		
Phs Duration (G+Y+Rc), s		53.7		13.8	11.1	42.7		
Change Period (Y+Rc), s		4.0		4.0	4.0	4.0		
Max Green Setting (Gmax), s		65.0		17.0	17.0	44.0		
Max Q Clear Time (g_c+I1), s		14.8		9.3	6.9	15.3		
Green Ext Time (p_c), s		35.0		0.5	0.2	22.9		

Intersection Summary	
HCM 2010 Ctrl Delay	9.8
HCM 2010 LOS	A

Intersection	
Int Delay, s/veh	1.6

Movement	EBL	EBT	WBT	WBR	SBL	SBR
Traffic Vol, veh/h	115	1352	957	35	0	155
Future Vol, veh/h	115	1352	957	35	0	155
Conflicting Peds, #/hr	0	0	0	3	0	0
Sign Control	Free	Free	Free	Free	Stop	Stop
RT Channelized	-	None	-	None	-	None
Storage Length	140	-	-	-	0	-
Veh in Median Storage, #	-	0	0	-	0	-
Grade, %	-	0	0	-	0	-
Peak Hour Factor	87	87	87	87	87	87
Heavy Vehicles, %	2	2	2	2	2	2
Mvmt Flow	132	1554	1100	40	0	178

Major/Minor	Major1		Major2		Minor2	
Conflicting Flow All	1140	0	-	0	2161	570
Stage 1	-	-	-	-	1120	-
Stage 2	-	-	-	-	1041	-
Critical Hdwy	4.14	-	-	-	6.84	6.94
Critical Hdwy Stg 1	-	-	-	-	5.84	-
Critical Hdwy Stg 2	-	-	-	-	5.84	-
Follow-up Hdwy	2.22	-	-	-	3.52	3.32
Pot Cap-1 Maneuver	609	-	-	-	40	465
Stage 1	-	-	-	-	274	-
Stage 2	-	-	-	-	301	-
Platoon blocked, %		-	-	-		
Mov Cap-1 Maneuver	609	-	-	-	31	465
Mov Cap-2 Maneuver	-	-	-	-	31	-
Stage 1	-	-	-	-	274	-
Stage 2	-	-	-	-	236	-

Approach	EB	WB	SB
HCM Control Delay, s	1	0	17.5
HCM LOS			C

Minor Lane/Major Mvmt	EBL	EBT	WBT	WBR	SBLn1
Capacity (veh/h)	609	-	-	-	465
HCM Lane V/C Ratio	0.217	-	-	-	0.383
HCM Control Delay (s)	12.5	-	-	-	17.5
HCM Lane LOS	B	-	-	-	C
HCM 95th %tile Q(veh)	0.8	-	-	-	1.8

HCM 2010 Signalized Intersection Summary
12: Pacific Ridge Dwy/Alcala Pkwy & Linda Vista Rd

10/26/2016

Movement	EBL	EBT	EBR	WBL	WBT	WBR	NBL	NBT	NBR	SBL	SBT	SBR
Lane Configurations												
Traffic Volume (veh/h)	351	630	16	4	903	400	53	6	27	52	2	52
Future Volume (veh/h)	351	630	16	4	903	400	53	6	27	52	2	52
Number	5	2	12	1	6	16	3	8	18	7	4	14
Initial Q (Qb), veh	0	0	0	0	0	0	0	0	0	0	0	0
Ped-Bike Adj(A_pbT)	1.00		0.97	1.00		0.98	1.00		0.98	1.00		0.88
Parking Bus, Adj	1.00	1.00	1.00	1.00	1.00	1.00	1.00	1.00	1.00	1.00	1.00	1.00
Adj Sat Flow, veh/h/ln	1863	1863	1900	1863	1863	1863	1863	1863	1900	1863	1863	1863
Adj Flow Rate, veh/h	413	741	19	5	1062	471	62	7	32	62	0	61
Adj No. of Lanes	1	2	0	1	2	1	1	1	0	2	0	1
Peak Hour Factor	0.85	0.85	0.85	0.85	0.85	0.85	0.85	0.85	0.85	0.85	0.85	0.85
Percent Heavy Veh, %	2	2	2	2	2	2	2	2	2	2	2	2
Cap, veh/h	381	2218	57	329	1328	883	81	13	60	669	0	263
Arrive On Green	0.21	0.63	0.63	0.25	0.25	0.25	0.05	0.05	0.05	0.19	0.00	0.19
Sat Flow, veh/h	1774	3523	90	702	3539	1557	1774	287	1310	3548	0	1394
Grp Volume(v), veh/h	413	372	388	5	1062	471	62	0	39	62	0	61
Grp Sat Flow(s),veh/h/ln	1774	1770	1844	702	1770	1557	1774	0	1597	1774	0	1394
Q Serve(g_s), s	23.6	10.8	10.9	0.6	30.9	21.8	3.8	0.0	2.6	1.6	0.0	4.1
Cycle Q Clear(g_c), s	23.6	10.8	10.9	0.6	30.9	21.8	3.8	0.0	2.6	1.6	0.0	4.1
Prop In Lane	1.00		0.05	1.00		1.00	1.00		0.82	1.00		1.00
Lane Grp Cap(c), veh/h	381	1114	1161	329	1328	883	81	0	73	669	0	263
V/C Ratio(X)	1.09	0.33	0.33	0.02	0.80	0.53	0.77	0.00	0.54	0.09	0.00	0.23
Avail Cap(c_a), veh/h	381	1114	1161	329	1328	883	81	0	73	871	0	342
HCM Platoon Ratio	1.00	1.00	1.00	0.67	0.67	0.67	1.00	1.00	1.00	1.00	1.00	1.00
Upstream Filter(I)	1.00	1.00	1.00	1.00	1.00	1.00	1.00	0.00	1.00	1.00	0.00	1.00
Uniform Delay (d), s/veh	43.2	9.6	9.6	25.9	37.3	18.3	51.9	0.0	51.4	36.9	0.0	37.9
Incr Delay (d2), s/veh	70.9	0.8	0.8	0.0	3.6	0.7	35.3	0.0	7.6	0.0	0.0	0.2
Initial Q Delay(d3),s/veh	0.0	0.0	0.0	0.0	0.0	0.0	0.0	0.0	0.0	0.0	0.0	0.0
%ile BackOfQ(50%),veh/ln	19.0	5.5	5.7	0.1	15.8	13.6	2.7	0.0	1.3	0.8	0.0	1.6
LnGrp Delay(d),s/veh	114.1	10.4	10.3	26.0	41.0	19.0	87.3	0.0	59.0	36.9	0.0	38.0
LnGrp LOS	F	B	B	C	D	B	F		E	D		D
Approach Vol, veh/h		1173			1538			101			123	
Approach Delay, s/veh		46.9			34.2			76.3			37.5	
Approach LOS		D			C			E			D	

Timer	1	2	3	4	5	6	7	8
Assigned Phs		2		4	5	6		8
Phs Duration (G+Y+Rc), s		75.4		25.6	28.0	47.4		9.0
Change Period (Y+Rc), s		* 6.1		4.9	4.4	6.1		4.0
Max Green Setting (Gmax), s		* 64		27.0	23.6	35.0		5.0
Max Q Clear Time (g_c+I1), s		12.9		6.1	25.6	32.9		5.8
Green Ext Time (p_c), s		29.6		0.2	0.0	1.9		0.0

Intersection Summary	
HCM 2010 Ctrl Delay	40.8
HCM 2010 LOS	D

Notes

HCM 2010 Signalized Intersection Summary
12: Pacific Ridge Dwy/Alcala Pkwy & Linda Vista Rd

10/26/2016

Movement	EBL	EBT	EBR	WBL	WBT	WBR	NBL	NBT	NBR	SBL	SBT	SBR
Lane Configurations												
Traffic Volume (veh/h)	262	954	78	49	809	254	52	49	45	468	22	343
Future Volume (veh/h)	262	954	78	49	809	254	52	49	45	468	22	343
Number	5	2	12	1	6	16	3	8	18	7	4	14
Initial Q (Qb), veh	0	0	0	0	0	0	0	0	0	0	0	0
Ped-Bike Adj(A_pbT)	1.00		0.97	1.00		0.98	1.00		0.98	1.00		0.91
Parking Bus, Adj	1.00	1.00	1.00	1.00	1.00	1.00	1.00	1.00	1.00	1.00	1.00	1.00
Adj Sat Flow, veh/h/ln	1863	1863	1900	1863	1863	1863	1863	1863	1900	1863	1863	1863
Adj Flow Rate, veh/h	282	1026	84	53	870	273	56	53	48	520	0	369
Adj No. of Lanes	1	2	0	1	2	1	1	1	0	2	0	1
Peak Hour Factor	0.93	0.93	0.93	0.93	0.93	0.93	0.93	0.93	0.93	0.93	0.93	0.93
Percent Heavy Veh, %	2	2	2	2	2	2	2	2	2	2	2	2
Cap, veh/h	268	1782	146	241	1233	931	140	70	64	871	0	353
Arrive On Green	0.20	0.72	0.72	0.46	0.46	0.46	0.08	0.08	0.08	0.25	0.00	0.25
Sat Flow, veh/h	1774	3305	270	505	3539	1557	1774	894	809	3548	0	1438
Grp Volume(v), veh/h	282	549	561	53	870	273	56	0	101	520	0	369
Grp Sat Flow(s),veh/h/ln	1774	1770	1806	505	1770	1557	1774	0	1703	1774	0	1438
Q Serve(g_s), s	16.6	16.4	16.5	7.2	21.6	8.4	3.3	0.0	6.4	14.3	0.0	27.0
Cycle Q Clear(g_c), s	16.6	16.4	16.5	7.2	21.6	8.4	3.3	0.0	6.4	14.3	0.0	27.0
Prop In Lane	1.00		0.15	1.00		1.00	1.00		0.48	1.00		1.00
Lane Grp Cap(c), veh/h	268	954	974	241	1233	931	140	0	134	871	0	353
V/C Ratio(X)	1.05	0.58	0.58	0.22	0.71	0.29	0.40	0.00	0.75	0.60	0.00	1.05
Avail Cap(c_a), veh/h	268	954	974	241	1233	931	258	0	248	871	0	353
HCM Platoon Ratio	1.33	1.33	1.33	1.33	1.33	1.33	1.00	1.00	1.00	1.00	1.00	1.00
Upstream Filter(I)	1.00	1.00	1.00	1.00	1.00	1.00	1.00	0.00	1.00	1.00	0.00	1.00
Uniform Delay (d), s/veh	44.0	9.5	9.5	21.2	25.0	8.9	48.2	0.0	49.6	36.7	0.0	41.5
Incr Delay (d2), s/veh	69.7	2.5	2.5	0.5	1.9	0.2	1.8	0.0	8.2	0.8	0.0	60.2
Initial Q Delay(d3),s/veh	0.0	0.0	0.0	0.0	0.0	0.0	0.0	0.0	0.0	0.0	0.0	0.0
%ile BackOfQ(50%),veh/ln	13.3	8.5	8.7	1.0	10.7	5.8	1.7	0.0	3.3	7.1	0.0	16.6
LnGrp Delay(d),s/veh	113.7	12.0	12.0	21.7	26.9	9.1	50.0	0.0	57.8	37.5	0.0	101.7
LnGrp LOS	F	B	B	C	C	A	D		E	D		F
Approach Vol, veh/h		1392			1196			157			889	
Approach Delay, s/veh		32.6			22.6			55.0			64.1	
Approach LOS		C			C			E			E	

Timer	1	2	3	4	5	6	7	8
Assigned Phs		2		4	5	6		8
Phs Duration (G+Y+Rc), s		65.4		31.9	21.0	44.4		12.7
Change Period (Y+Rc), s		* 6.1		4.9	4.4	6.1		4.0
Max Green Setting (Gmax), s		* 53		27.0	16.6	31.0		16.0
Max Q Clear Time (g_c+I1), s		18.5		29.0	18.6	23.6		8.4
Green Ext Time (p_c), s		24.2		0.0	0.0	6.7		0.4

Intersection Summary	
HCM 2010 Ctrl Delay	38.0
HCM 2010 LOS	D

Notes

APPENDIX M

EXCERPTS FROM THE *MORENA BOULEVARD STATION AREA PLANNING STUDY*

Morena Blvd Station Area Planning Study

Final Report

February 2014

Caltrans

The City of San Diego

KTU+A
Planning · Landscape Architecture

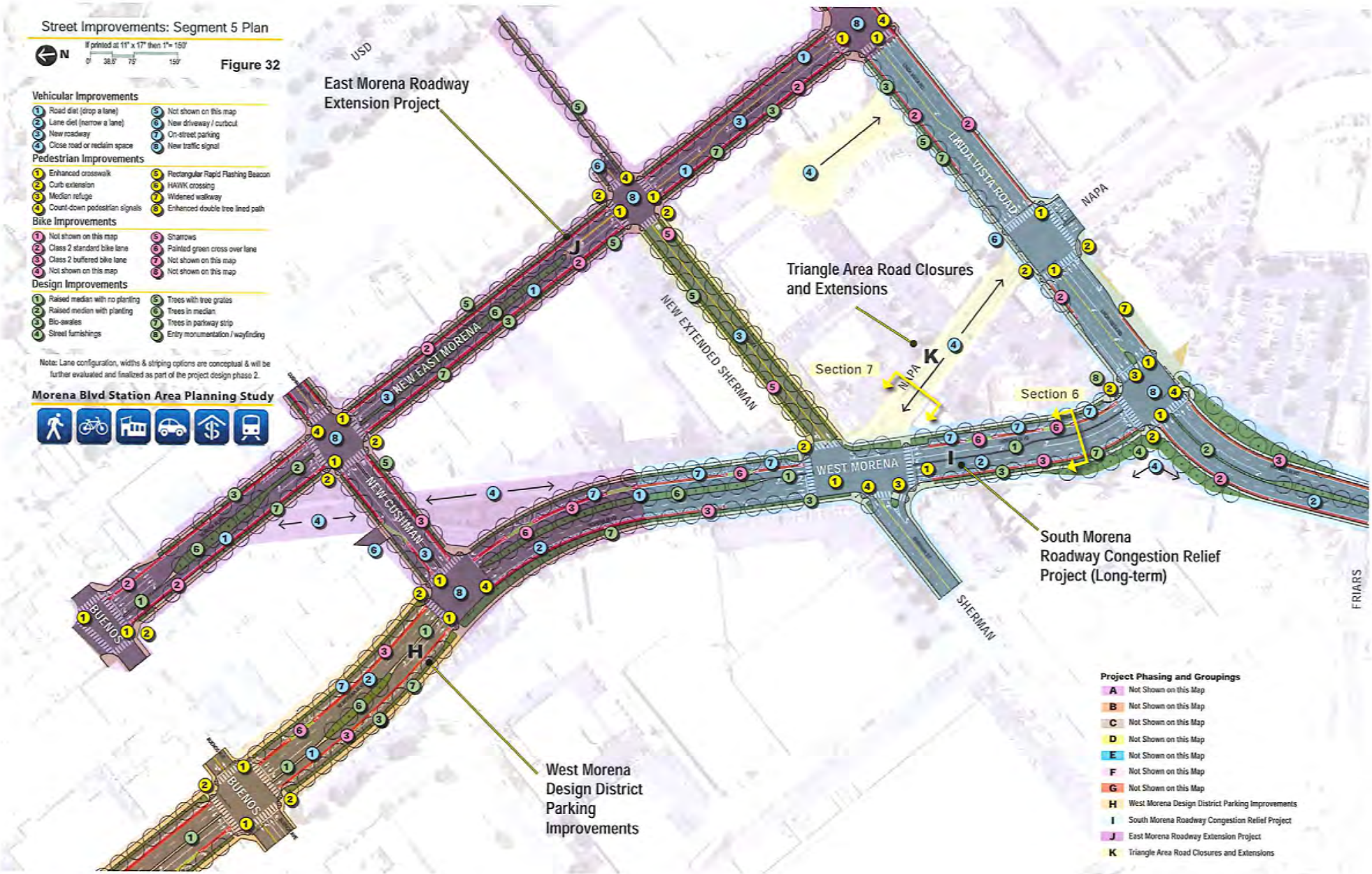
Street Improvements: Segment 5 Plan
N
If printed at 11" x 17" then 1"= 150'
0' 38.5' 75' 150'
Figure 32
Vehicular Improvements
1 Road diet (drop a lane)
2 Lane diet (narrow a lane)
3 New roadway
4 Close road or reclaim space
5 Not shown on this map
6 New driveway / curbcut
7 On-street parking
8 New traffic signal
Pedestrian Improvements
1 Enhanced crosswalk
2 Curb extension
3 Median refuge
4 Count-down pedestrian signals
5 Rectangular Rapid Flashing Beacon
6 HAWK crossing
7 Widened walkway
8 Enhanced double tree lined path
Bike Improvements
1 Not shown on this map
2 Class 2 standard bike lane
3 Class 2 buffered bike lane
4 Not shown on this map
5 Sharrows
6 Painted green cross over lane
7 Not shown on this map
8 Not shown on this map
Design Improvements
1 Raised median with no planting
2 Raised median with planting
3 Bio-swales
4 Street furnishings
5 Trees with tree grates
6 Trees in median
7 Trees in parkway strip
8 Entry monumentation / wayfinding
Note: Lane configuration, widths & striping options are conceptual & will be further evaluated and finalized as part of the project design phase 2.
Morena Blvd Station Area Planning Study
USD
East Morena Roadway Extension Project
J
NEW EAST MORENA
NEW EXTENDED SHERMAN
LINDA VISTA ROAD
NAPA
Triangle Area Road Closures and Extensions
K
Section 7
NAPA
Section 6
WEST MORENA
I
NEW CUSHMAN
BUENOS
SHERMAN
South Morena Roadway Congestion Relief Project (Long-term)
FRIARS
H
West Morena Design District Parking Improvements
Project Phasing and Groupings
A Not Shown on this Map
B Not Shown on this Map
C Not Shown on this Map
D Not Shown on this Map
E Not Shown on this Map
F Not Shown on this Map
G Not Shown on this Map
H West Morena Design District Parking Improvements
I South Morena Roadway Congestion Relief Project
J East Morena Roadway Extension Project
K Triangle Area Road Closures and Extensions

5.5.11 PROJECT "J"- East Morena Roadway Extension Project

Project Vision: Traffic originating from USD, Friars Road and Upper Linda Vista that are destined for I-5, all utilize the triangle area to access the on-ramps at Tecolote. However, this movement is out of direction and already congested. A new extension of Morena at Cushman down to Linda Vista Road, would bypass the triangle and provide a more direct route to the freeway. It would not impact the levels of use on Morena Boulevard any more than current conditions, since all of the above mentioned traffic, finds its way back onto Morena, north of Cushman anyway. The new roadway extension also creates development opportunity in this area since it currently lacks a road network. It also provides reclaimed right of way that can be used for new development.

Project Features: A one lane each direction would be created on this new roadway, with left turn protected lanes. A new intersection would be provided along Linda Vista road, helping to provide safer pedestrian crossing points that may be originating at USD, heading to the existing Morena LRT station. Full urban design treatments, safety improvements, ADA accessible facilities and bike lanes would be provided through this area. A pedestrian promenade should be extended into the new areas of the USD campus, allowing for direct bike and pedestrian connections to the LRT stations and the campus.

Project Potential Funding Sources: The reclaimed right of way by itself, should represent a large return for a private developer to provide the financial support needed to construct this roadway network. The projects located next to these roads stand to benefit mostly, and therefore should be required to construct and dedicate these roadways.

Primary Justification and Value: The future congestion relief and efficient traffic flow needed to support major infill development, must be able to rely on an efficient circulation layout. Pedestrian movements, accommodation of bike travel on roadways and traffic calming are all side benefits of this roadway extension project.

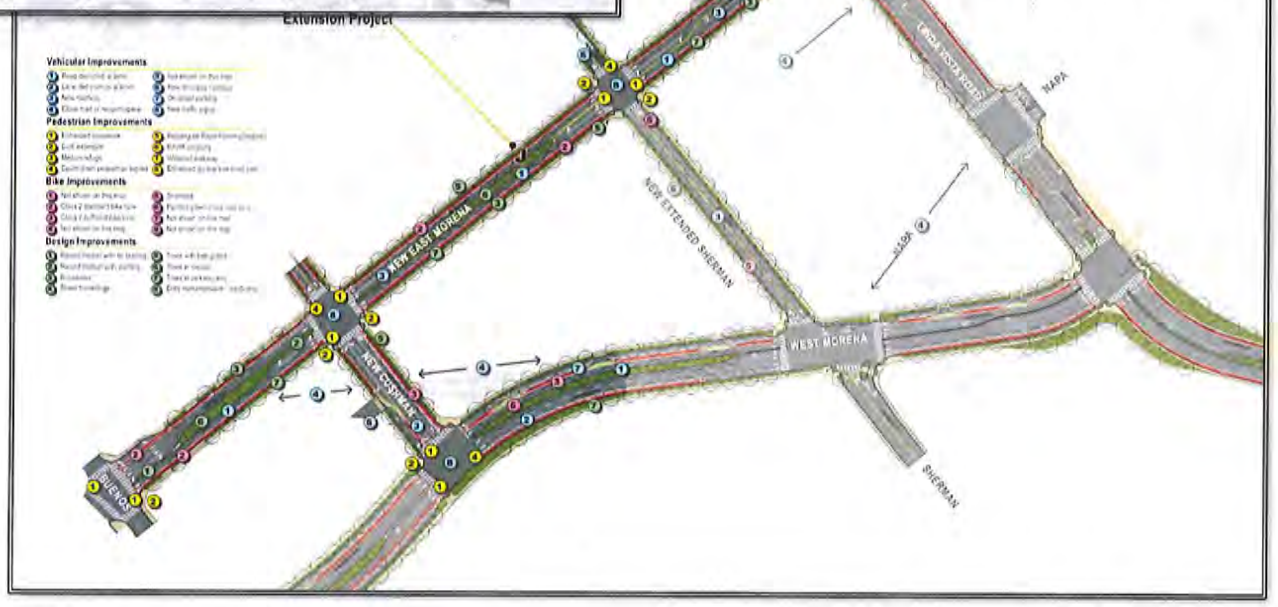

Project Name: **East Morena Roadway Extension Project** Phase #: **J**

Items	Unit Cost	Unit	Quantity	Sub-Total
Demolition				
Asphalt Roadway Surface	$3	SF	16,525	$49,575
Trees, shrubs, groundcover & soil	$3	SF	8,313	$20,783
Curb & Gutter	$5	LF	1,625	$8,125
Concrete Pavement	$3	SF	3,250	$9,750
Budget for Relocating Utility Boxes, Traffic Signal Boxes, & Wet / Dry Utility Line Relocations	$150,000	LS	1	$150,000
			Demolition Totals:	$238,233
New Paving				
New Full Depth AC Paving (base, compaction, fine grading & drainage with 4" new AC)	$10	SF	105,752	$1,057,520
Asphalt Paving Patching and Sealing for Minor Roadway Changes & Gutter to Road Infills	$2	SF	12,683	$25,366
Concrete Sidewalk	$7	SF	25,261	$176,827
6" Concrete Curb and 18" Gutter	$22	LF	5,201	$114,422
Pedestrian Bulb-out	$25,000	EA	8	$200,000
Median Curb Work	$15	LF	2,828	$42,420
Curb Ramps	$2,000	EA	22	$44,000
Driveway Ramps	$2,000	EA	8	$16,000
Upgraded Curb Ramps on Existing Sidewalks	$1,500	EA	4	$6,000
			New Paving Totals:	$1,682,555
Streetscape				
Parkway Strips (excludes trees but includes soils, mulch, groundcover & irrigation)	$5	SF	21,763	$108,815
Bio-swale / Bulbout Planter Areas with More Intensive Shrub & Irrigation Requirements	$15	SF	5,000	$75,000
Parkway Trees- 24" box (assumes backfill, small shrub planting, irrigation & root barriers)	$750	EA	108	$81,000
Parkway Trees- 36" box (assumes backfill, small shrub planting, irrigation & root barriers)	$1,250	EA	23	$28,750
Median Trees (8' x 8' planting area with shrubs, cobble, irrigation, soil, root barriers & 24" tree)	$500	EA	23	$11,500
Parkway Tree Grates (for tight walking areas)	$900	EA	50	$45,000
New Lighting Poles & Fixtures (2 per new intersection & 1 per 150lf of a block if area widened)	$10,000	EA	9	$90,000
Various Street Furnishings in Special Areas Only (benches & trash receptacles)	$15,000	EA	2	$30,000
			Landscape Totals:	$470,065
Signage & Pavement Markings				
Bike Lane/Sharrow Symbols Paint	$80	EA	18	$1,440
Bike Lane Paint	$2	LF	4,654	$9,308
Bike Lane 2' Chevron Striped Buffer Paint	$4	LF	604	$2,416
Bike Lane Cross Over Locations (green dashed or solid paint)	$25	LF	201	$5,025
Bike Lane Signs & Cross Over Warning Signs (with core drilling)	$350	EA	2	$700
Modified Ladder Style Crosswalk Striping	$2,500	EA	16	$40,000
Stop Bar Paint	$2	LF	500	$1,000
Standard Pavement Markings (Arrows, School Xing, etc)	$100	EA	45	$4,500
Parking Stripes, Paint	$50	EA	150	$7,500
Wayfinding/Informative Signs	$350	EA	5	$1,750
Regulatory Signs (Stop signs, etc)	$350	EA	15	$5,250
			Signage & Pavement Marking Totals:	$78,889
Enhanced Safety Measures				
Bike Detector Loop	$700	EA	12	$8,400
Special Pedestrian Countdown Timers	$2,500	EA	12	$30,000
Traffic Signals	$40,000	Per Pole	6	$240,000
			Safety Measure Totals:	$417,289

Other Costs (55% total):				
Contingency:	20%	$577,406.10		
Bonding / Mobilization / Contractor Internal Management / As Builts:	10%	$288,703.05	Pre-markup Cost	$2,887,031
Engineering / Design:	12%	$346,443.66	Total Other Cost:	$1,587,867
Environmental Clearance & Permitting:	5%	$144,351.53		
Bid Support Services & Agency Construction Management:	3%	$86,610.92		
Traffic Management Services:	5%	$144,351.53	Grand Total Cost:	$4,474,897
			Rounded Grand Total Cost:	**$4,500,000**

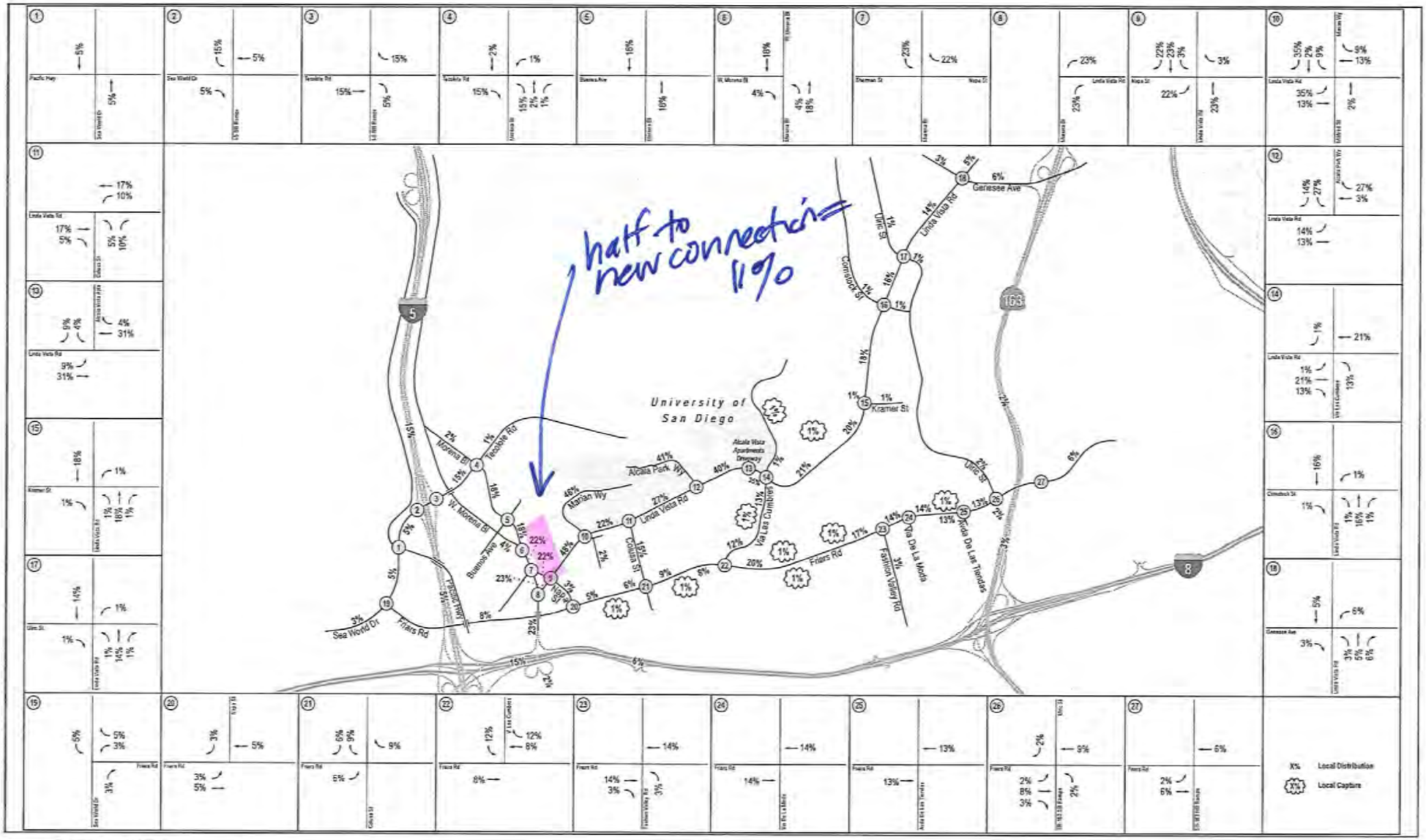

LINSCOTT LAW & GREENSPAN engineers

N:\2341\Figures\Feb 2016
Date: 02/16/16

Figure 3-1

Project Traffic Distribution

USD MASTER PLAN UPDATE

MORENA STATION - 2035 ADT (w/Draft Final LU & Scenario 2 Network)

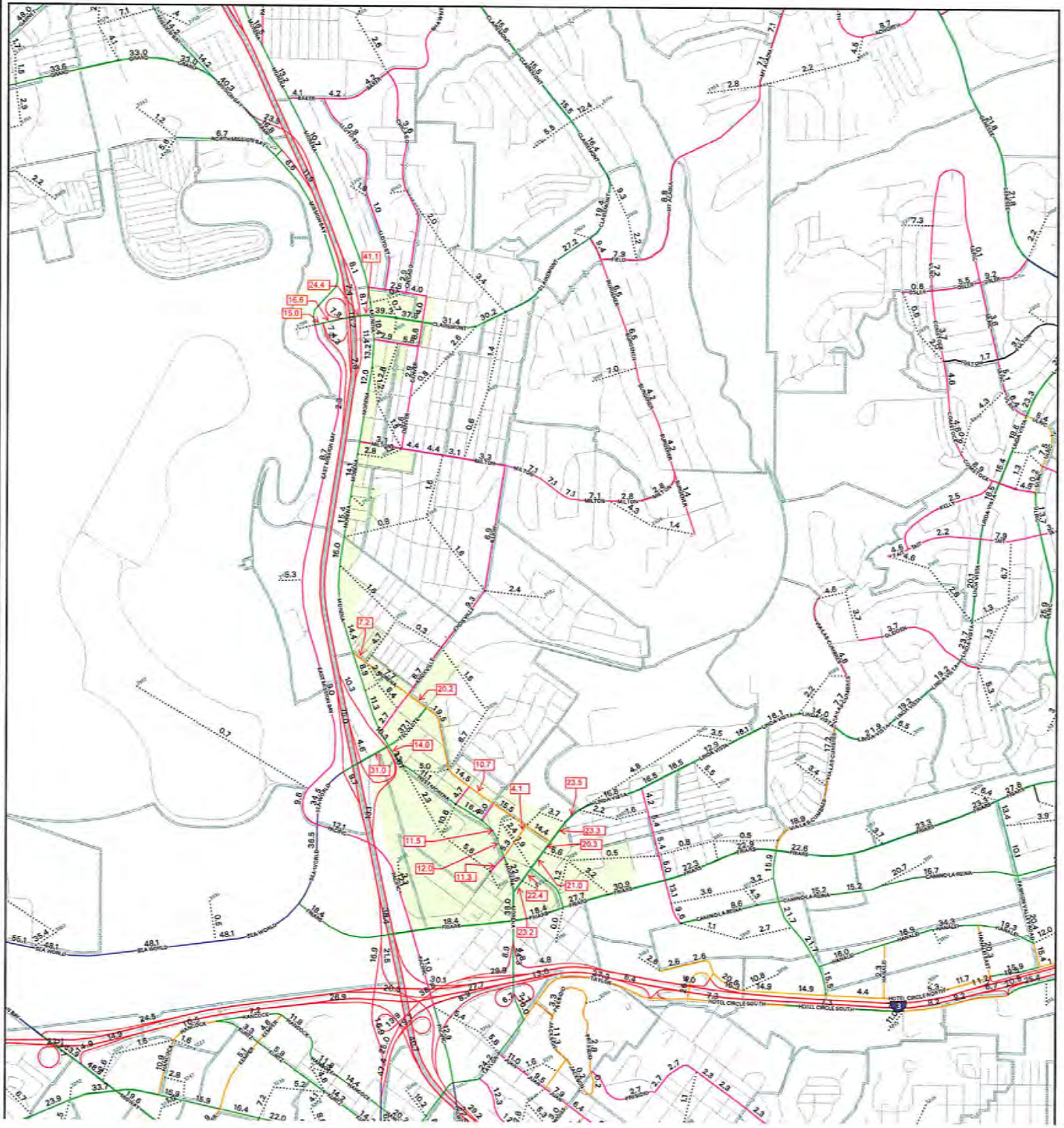

Morena Station

SANDAG Series 12

Regional: 2035RC
Study Area: Draft Final LU
w/Scenario 2 Street Network

Legend

- Freeway
- Prime
- Major
- Collector
- Local Collector
- Rural Collector
- Rural Light Collector
- Local
- Ramp

Unadjusted Volumes (1000s)

Feet
0 800 1,600
0 96 288 480
Meters

N

January 15, 2014

APPENDIX N

SIGNAL WARRANT ANALYSIS

Intersection #11
Linda Vista Road / Colusa Street
Warrant 3, Peak Hour

Near Term + Project

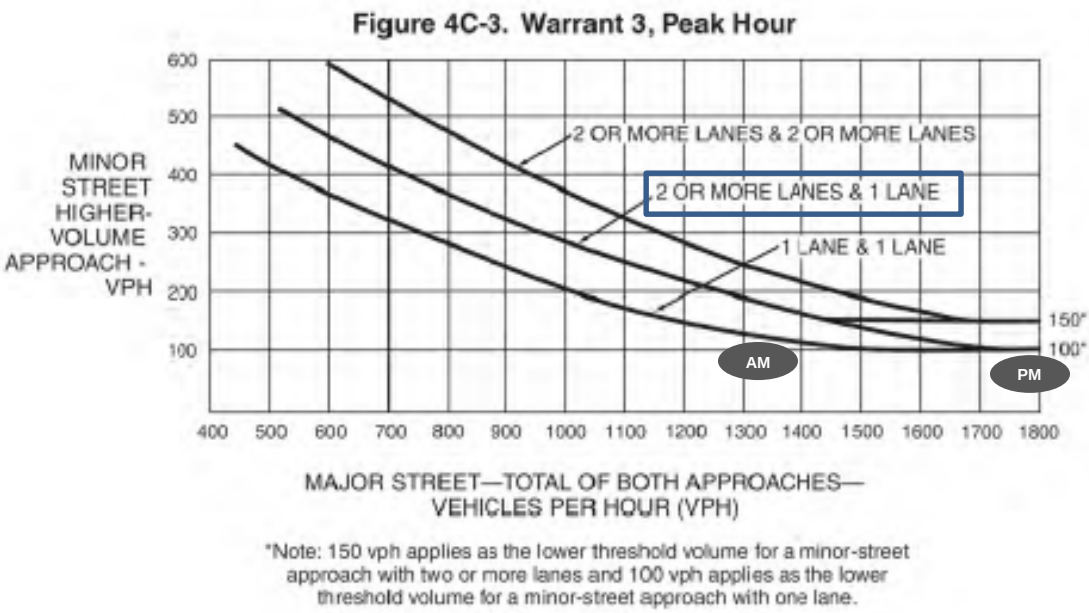

Near Term + Project Volumes

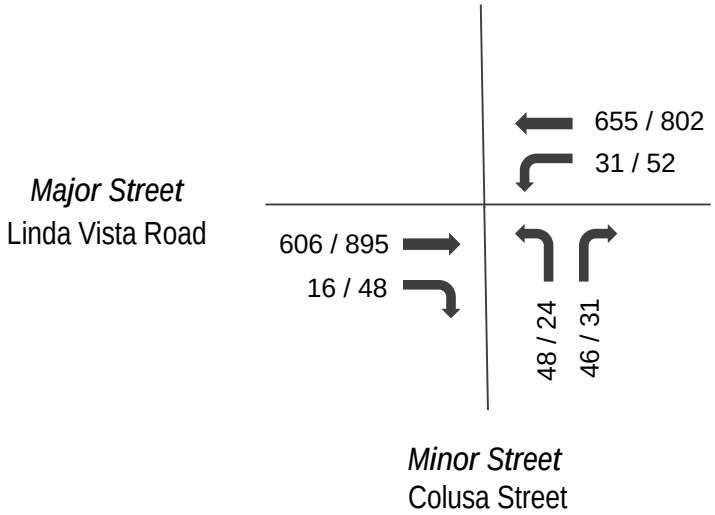

AM Peak Hour

Minor Street:	94
Major Street:	1,308

PM Peak Hour

Minor Street:	55
Major Street:	1,797

RESULT: SIGNAL NOT WARRANTED

Intersection #11
Linda Vista Road / Colusa Street
Warrant 3, Peak Hour

Long Term + Project

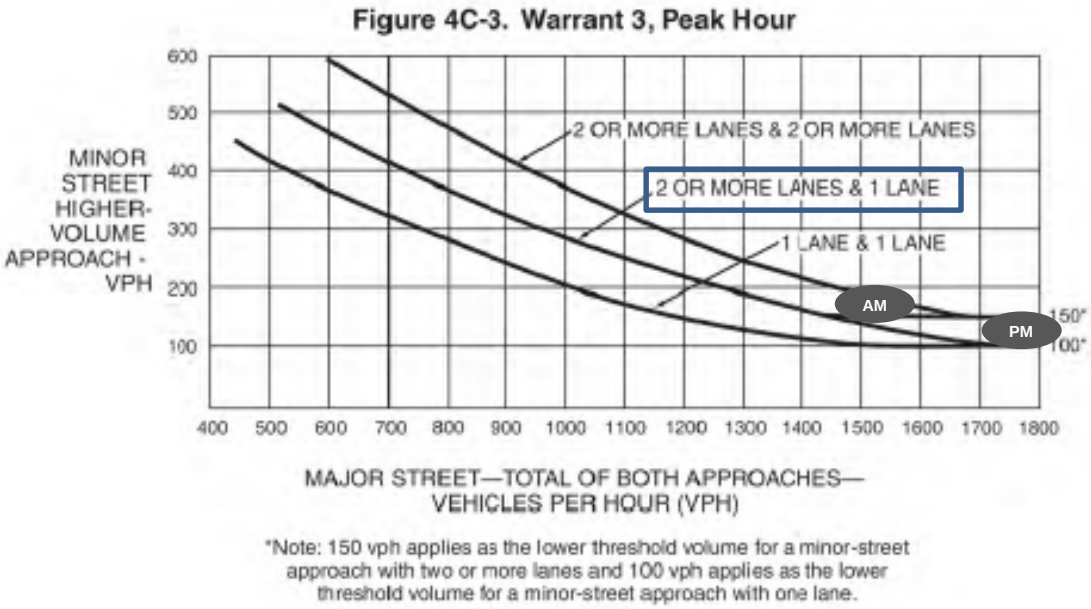

*Note: 150 vph applies as the lower threshold volume for a minor-street approach with two or more lanes and 100 vph applies as the lower threshold volume for a minor-street approach with one lane.

Long Term + Project Volumes

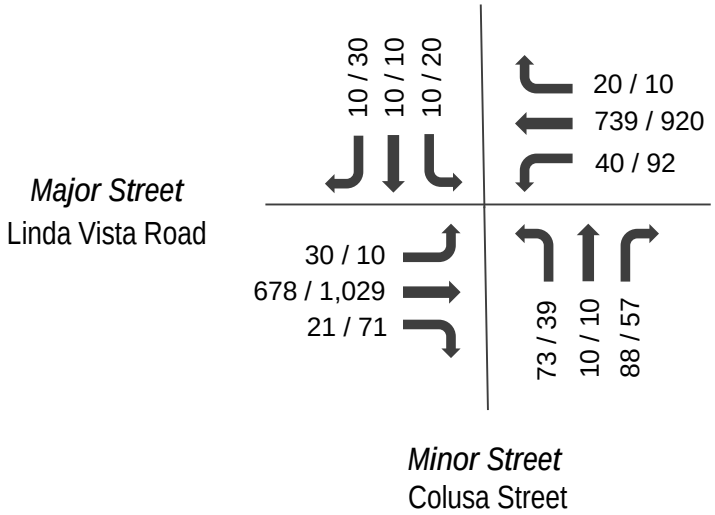

AM Peak Hour

Minor Street:	171
Major Street:	1,528

PM Peak Hour

Minor Street:	106
Major Street:	2,132

RESULT: SIGNAL WARRANTED

APPENDIX O

MITIGATION CONCEPTUAL FIGURES

REV. 03/16/2016
N:\2341\FIGURES\FEBRUARY 2016\CONCEPTUAL PLANS\CONCEPTUAL FIGURE 1.DWG

LINSCOTT LAW & GREENSPAN engineers

Note: Signal mitigates the significant Impact. It is recommended, but not required from a level of service standpoint, to eliminate parking (approximately six spaces) along the east curb of Colusa St to provide a dedicated 150-foot northbound left-turn lane and a dedicated northbound right turn lane at Linda Vista Rd, such that right turning drivers do not need to wait behind left turning vehicles.

Figure 1

Linda Vista Road / Colusa St Intersection

USD Master Plan Update

LINSCOTT LAW & GREENSPAN engineers

Figure 2 - Option A

Linda Vista Road / Alcala Apts. Entrance Intersection

USD MASTER PLAN UPDATE

NORTH

SCALE: 1"=80'

REV. 11/10/2016
N:\2341\Figures\Conceptual Plans\Conceptual Figure 5.dwg

LINSCOTT LAW & GREENSPAN engineers

Figure 2 - Option B

Linda Vista Road / Alcala Apts. Entrance Intersection

USD MASTER PLAN UPDATE

APPENDIX P

SENSITIVITY ANALYSIS INFORMATION

HCM 2010 Signalized Intersection Summary
9: Linda Vista Rd & Napa St

400 FTE

10/16/2015

Movement	EBL	EBT	EBR	WBL	WBT	WBR	NBL	NBT	NBR	SBL	SBT	SBR
Lane Configurations												
Volume (veh/h)	465	266	24	230	193	129	37	684	219	209	684	379
Number	7	4	14	3	8	18	5	2	12	1	6	16
Initial Q (Qb), veh	0	0	0	0	0	0	0	0	0	0	0	0
Ped-Bike Adj(A_pbT)	1.00		1.00	1.00		1.00	1.00		1.00	1.00		1.00
Parking Bus, Adj	1.00	1.00	1.00	1.00	1.00	1.00	1.00	1.00	1.00	1.00	1.00	1.00
Adj Sat Flow, veh/h/ln	1863	1863	1900	1863	1863	1863	1863	1863	1900	1863	1863	1900
Adj Flow Rate, veh/h	402	413	26	250	198	137	39	728	233	222	728	403
Adj No. of Lanes	1	1	0	2	1	1	1	2	0	1	2	0
Peak Hour Factor	0.94	0.94	0.94	0.94	0.94	0.94	0.94	0.94	0.94	0.94	0.94	0.94
Percent Heavy Veh, %	2	2	2	2	2	2	2	2	2	2	2	2
Cap, veh/h	460	450	28	448	235	200	50	892	285	235	973	537
Arrive On Green	0.26	0.26	0.26	0.13	0.13	0.13	0.03	0.34	0.34	0.13	0.44	0.44
Sat Flow, veh/h	1774	1734	109	3548	1863	1583	1774	2639	845	1774	2202	1216
Grp Volume(v), veh/h	402	0	439	250	198	137	39	488	473	222	585	546
Grp Sat Flow(s),veh/h/ln	1774	0	1843	1774	1863	1583	1774	1770	1714	1774	1770	1648
Q Serve(g_s), s	29.5	0.0	31.5	9.0	14.1	11.3	3.0	34.3	34.3	16.9	37.4	37.6
Cycle Q Clear(g_c), s	29.5	0.0	31.5	9.0	14.1	11.3	3.0	34.3	34.3	16.9	37.4	37.6
Prop In Lane	1.00		0.06	1.00		1.00	1.00		0.49	1.00		0.74
Lane Grp Cap(c), veh/h	460	0	478	448	235	200	50	598	579	235	782	729
V/C Ratio(X)	0.87	0.00	0.92	0.56	0.84	0.69	0.78	0.82	0.82	0.95	0.75	0.75
Avail Cap(c_a), veh/h	497	0	516	629	330	281	69	598	579	235	782	729
HCM Platoon Ratio	1.00	1.00	1.00	1.00	1.00	1.00	1.00	1.00	1.00	1.00	1.00	1.00
Upstream Filter(I)	0.56	0.00	0.56	1.00	1.00	1.00	1.00	1.00	1.00	1.00	1.00	1.00
Uniform Delay (d), s/veh	48.2	0.0	49.0	55.9	58.1	56.8	65.7	41.2	41.2	58.5	31.6	31.7
Incr Delay (d2), s/veh	9.2	0.0	13.3	0.4	9.5	1.6	20.9	11.7	12.1	43.3	6.4	7.0
Initial Q Delay(d3),s/veh	0.0	0.0	0.0	0.0	0.0	0.0	0.0	0.0	0.0	0.0	0.0	0.0
%ile BackOfQ(50%),veh/ln	15.7	0.0	17.7	4.4	7.9	5.0	1.8	18.8	18.2	11.1	19.6	18.6
LnGrp Delay(d),s/veh	57.4	0.0	62.3	56.3	67.6	58.4	86.6	52.9	53.2	101.8	38.1	38.6
LnGrp LOS	E		E	E	E	E	F	D	D	F	D	D
Approach Vol, veh/h		841			585			1000			1353	
Approach Delay, s/veh		59.9			60.6			54.4			48.8	
Approach LOS		E			E			D			D	

Timer	1	2	3	4	5	6	7	8
Assigned Phs	1	2		4	5	6		8
Phs Duration (G+Y+Rc), s	22.4	51.4		40.2	8.2	65.5		22.1
Change Period (Y+Rc), s	4.4	* 5.4		4.9	4.4	5.4		4.9
Max Green Setting (Gmax), s	18.0	* 37		38.1	5.3	48.9		24.1
Max Q Clear Time (g_c+I1), s	18.9	36.3		33.5	5.0	39.6		16.1
Green Ext Time (p_c), s	0.0	0.3		1.8	0.0	6.2		1.0

Intersection Summary	
HCM 2010 Ctrl Delay	54.6
HCM 2010 LOS	D

Notes

User approved volume balancing among the lanes for turning movement.

NearTerm W/out P +P (750 FTE)

53.5 D 55.5 E vs 54.6 D ✓ no impact

50 FTE

Intersection	
Int Delay, s/veh	1.3

Movement	EBT	EBR	WBL	WBT	NBL	NBR
Vol, veh/h	880	42	41	784	20	24
Conflicting Peds, #/hr	0	18	0	0	0	0
Sign Control	Free	Free	Free	Free	Stop	Stop
RT Channelized	-	None	-	None	-	None
Storage Length	-	-	100	-	0	-
Veh in Median Storage, #	0	-	-	0	0	-
Grade, %	0	-	-	0	0	-
Peak Hour Factor	84	84	84	84	84	84
Heavy Vehicles, %	2	2	2	2	2	2
Mvmt Flow	1048	50	49	933	24	29

Major/Minor	Major1		Major2		Minor1	
Conflicting Flow All	0	0	1098	0	1637	549
Stage 1	-	-	-	-	1073	-
Stage 2	-	-	-	-	564	-
Critical Hdwy	-	-	4.14	-	6.84	6.94
Critical Hdwy Stg 1	-	-	-	-	5.84	-
Critical Hdwy Stg 2	-	-	-	-	5.84	-
Follow-up Hdwy	-	-	2.22	-	3.52	3.32
Pot Cap-1 Maneuver	-	-	631	-	91	480
Stage 1	-	-	-	-	290	-
Stage 2	-	-	-	-	533	-
Platoon blocked, %	-	-		-		
Mov Cap-1 Maneuver	-	-	631	-	83	480
Mov Cap-2 Maneuver	-	-	-	-	83	-
Stage 1	-	-	-	-	290	-
Stage 2	-	-	-	-	484	-

Approach	EB	WB	NB
HCM Control Delay, s	0	0.6	41
HCM LOS			E

Minor Lane/Major Mvmt	NBLn1	EBT	EBR	WBL	WBT
Capacity (veh/h)	151	-	-	631	-
HCM Lane V/C Ratio	0.347	-	-	0.077	-
HCM Control Delay (s)	41	-	-	11.2	-
HCM Lane LOS	E	-	-	B	-
HCM 95th %tile Q(veh)	1.4	-	-	0.3	-

Near-Term w/out P +P (750 FTE) Δ

41.0 E 50.9 F vs 41.0 E 0.0 ✓ no impact

500 FTE

Intersection	
Int Delay, s/veh	2.5

Movement	EBL	EBT	WBT	WBR	SBL	SBR
Vol, veh/h	62	924	709	17	33	81
Conflicting Peds, #/hr	0	0	0	3	0	0
Sign Control	Free	Free	Free	Free	Stop	Stop
RT Channelized	-	None	-	None	-	None
Storage Length	140	-	-	-	0	-
Veh in Median Storage, #	-	0	0	-	0	-
Grade, %	-	0	0	-	0	-
Peak Hour Factor	87	87	87	87	87	87
Heavy Vehicles, %	2	2	2	2	2	2
Mvmt Flow	71	1062	815	20	38	93

Major/Minor	Major1		Major2		Minor2	
Conflicting Flow All	834	0	-	0	1499	417
Stage 1	-	-	-	-	825	-
Stage 2	-	-	-	-	674	-
Critical Hdwy	4.14	-	-	-	6.84	6.94
Critical Hdwy Stg 1	-	-	-	-	5.84	-
Critical Hdwy Stg 2	-	-	-	-	5.84	-
Follow-up Hdwy	2.22	-	-	-	3.52	3.32
Pot Cap-1 Maneuver	795	-	-	-	113	585
Stage 1	-	-	-	-	391	-
Stage 2	-	-	-	-	468	-
Platoon blocked, %		-	-	-		
Mov Cap-1 Maneuver	795	-	-	-	103	585
Mov Cap-2 Maneuver	-	-	-	-	103	-
Stage 1	-	-	-	-	391	-
Stage 2	-	-	-	-	426	-

Approach	EB	WB	SB
HCM Control Delay, s	0.6	0	34.7
HCM LOS			D

Minor Lane/Major Mvmt	EBL	EBT	WBT	WBR	SBLn1
Capacity (veh/h)	795	-	-	-	248
HCM Lane V/C Ratio	0.09	-	-	-	0.528
HCM Control Delay (s)	10	-	-	-	34.7
HCM Lane LOS	A	-	-	-	D
HCM 95th %tile Q(veh)	0.3	-	-	-	2.8

Near-Term w/out P +P (750 FTE)

29.6 D 38.5 E vs 34.7 D ✓ no impact

TABLE A
NEAR-TERM SEGMENT SENSITIVITY ANALYSIS

Street Segment	Functional Classification	LOS E Capacity	Without Project			With Project			With 350 FTE Only			
			ADT [a]	LOS [b]	V/C [c]	ADT	LOS	V/C	ADT	LOS	V/C	Δ [d]
Linda Vista Road												
Napa St to Marian Way/Mildred	4-Lane Collector	30,000	27,333	E	0.911	28,553	E	0.952	27,903	E	0.930	0.019

Footnotes:

a. Average Daily Traffic.
b. Level of Service.
c. Volume to capacity ratio.
d. Increase in V/C ratio as compared to Near-Term conditions.

TABLE B
LONG-TERM (YEAR 2035) SEGMENT SENSITIVITY ANALYSIS

Street Segment	Functional Classification	LOS E Capacity	Without Project			With Project			With 1,800 FTE Only			
			ADT [a]	LOS [b]	V/C [c]	ADT	LOS	V/C	ADT	LOS	V/C	Δ [d]
Linda Vista Road												
Ulric St to Genesee Avenue	4-Lane Major	40,000	37,400	E	0.935	38,700	E	0.966	38,180	E	0.955	0.020

Footnotes:

a. Average Daily Traffic.
b. Level of Service.
c. Volume to capacity ratio.
d. Increase in V/C ratio as compared to Long-Term (Year 2035) conditions.

APPENDIX Q

FIGURES FROM THE USD MASTER PLAN UPDATE

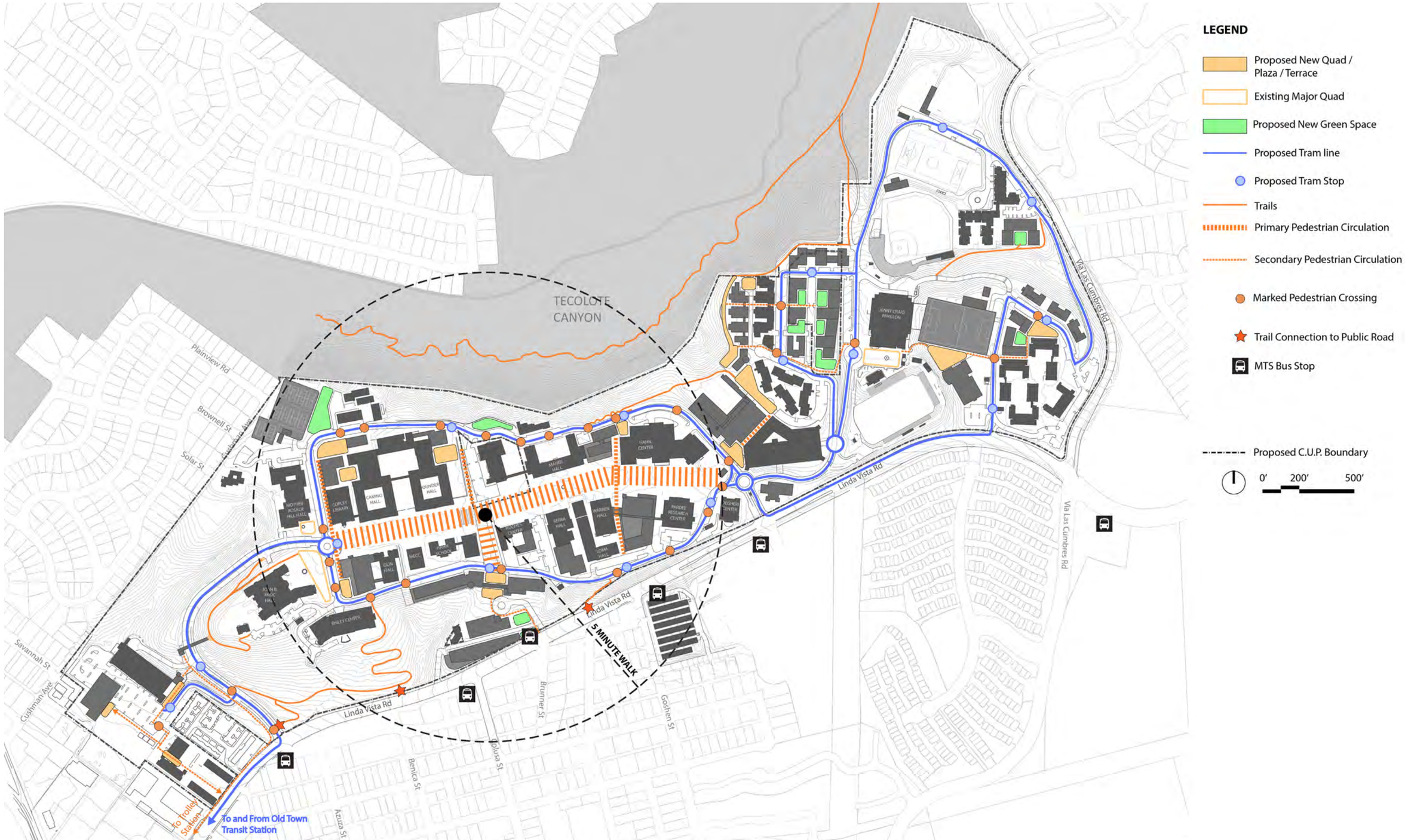

Figure 14 - Pedestrian & Tram Circulation and Connectivity

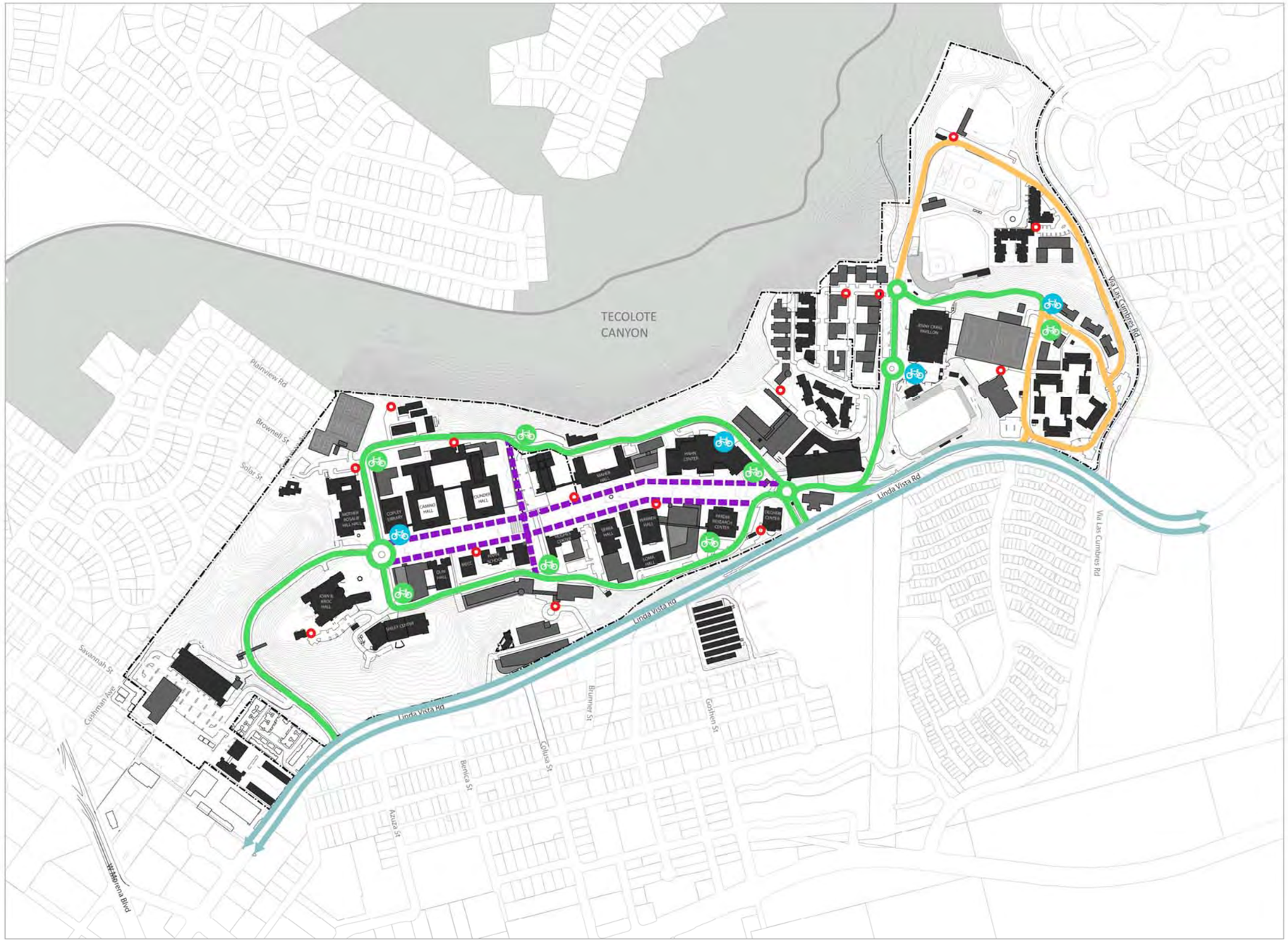

LEGEND

Proposed C.U.P. Boundary

0' 200' 500'

APPENDIX R

IMPROVEMENT PLANS: LINDA VISTA PUBLIC FACILITIES FINANCING PLAN AND CALTRANS FRIARS ROAD / SR 163 INTERCHANGE PLANS

CITY OF SAN DIEGO
FACILITIES FINANCING PROGRAM

TITLE: **LINDA VISTA ROAD AT GENESEE AVENUE**

DEPARTMENT: E&CP: TRANSPORTATION ENGINEERING

CIP NO.:

PROJECT: T5
COUNCIL DISTRICT: 6
COMMUNITY PLAN: LINDA VISTA

DESCRIPTION: THIS PROJECT PROVIDES FOR THE LENGTHENING OF THE GENESEE AVENUE WESTBOUND LEFT-TURN LANES TO 300' OF VEHICLE STORAGE; RE-STRIPE GENESEE AVENUE TO PROVIDE AN EXCLUSIVE EASTBOUND RIGHT-TURN LANE. IT WILL ALSO WIDEN LINDA VISTA ROAD TO PROVIDE AN EXCLUSIVE NORTHBOUND RIGHT-TURN LANE.

JUSTIFICATION: THIS PROJECT WILL IMPROVE THE TRAFFIC FLOW THROUGH THE INTERSECTION.

SCHEDULE: LAND ACQUISITION, DESIGN AND CONSTRUCTION WILL BE SCHEDULED WHEN FUNDING IS IDENTIFIED.

PROJECT FUNDING

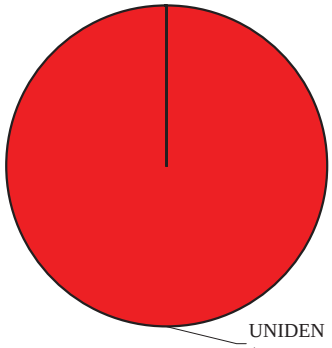

FUNDING:	SOURCE	EXPEN/ENCUM	CONT APPR	FY 2004	FY 2005	FY 2006	FY 2007	FY 2008	FY 2009
$195,000	UNIDEN								
$195,000	**TOTAL**	$0	$0	$0	$0	$0	$0	$0	$0

Dist	COUNTY	ROUTE	POST MILES TOTAL PROJECT	SHEET No.	TOTAL SHEETS
11	SD	163	4.1/4.9		XXX

REGISTERED CIVIL ENGINEER DATE

PLANS APPROVAL DATE

REGISTERED PROFESSIONAL ENGINEER EDUARDO G. SIMONSEN No. C82608 Exp. 9/30/16 CIVIL STATE OF CALIFORNIA

THE STATE OF CALIFORNIA OR ITS OFFICERS OR AGENTS SHALL NOT BE RESPONSIBLE FOR THE ACCURACY OR COMPLETENESS OF SCANNED COPIES OF THIS PLAN SHEET.

DOKKEN ENGINEERING
5675 RUFFIN Rd
SUITE 250
SAN DIEGO, CA 92123

CITY OF SAN DIEGO
525 B STREET
SUITE 750
SAN DIEGO, CA 92101

NOTE:

FOR ACCURATE RIGHT OF WAY DATA, CONTACT RIGHT OF WAY ENGINEERING AT THE DISTRICT OFFICE.

LEGEND:

BEGIN OR END PAVEMENT DELINEATION DETAIL

CHANGE OF PAVEMENT DELINEATION DETAILS

-G TYPE G DELINEATOR

-F TYPE F DELINEATOR

SAN DIEGO

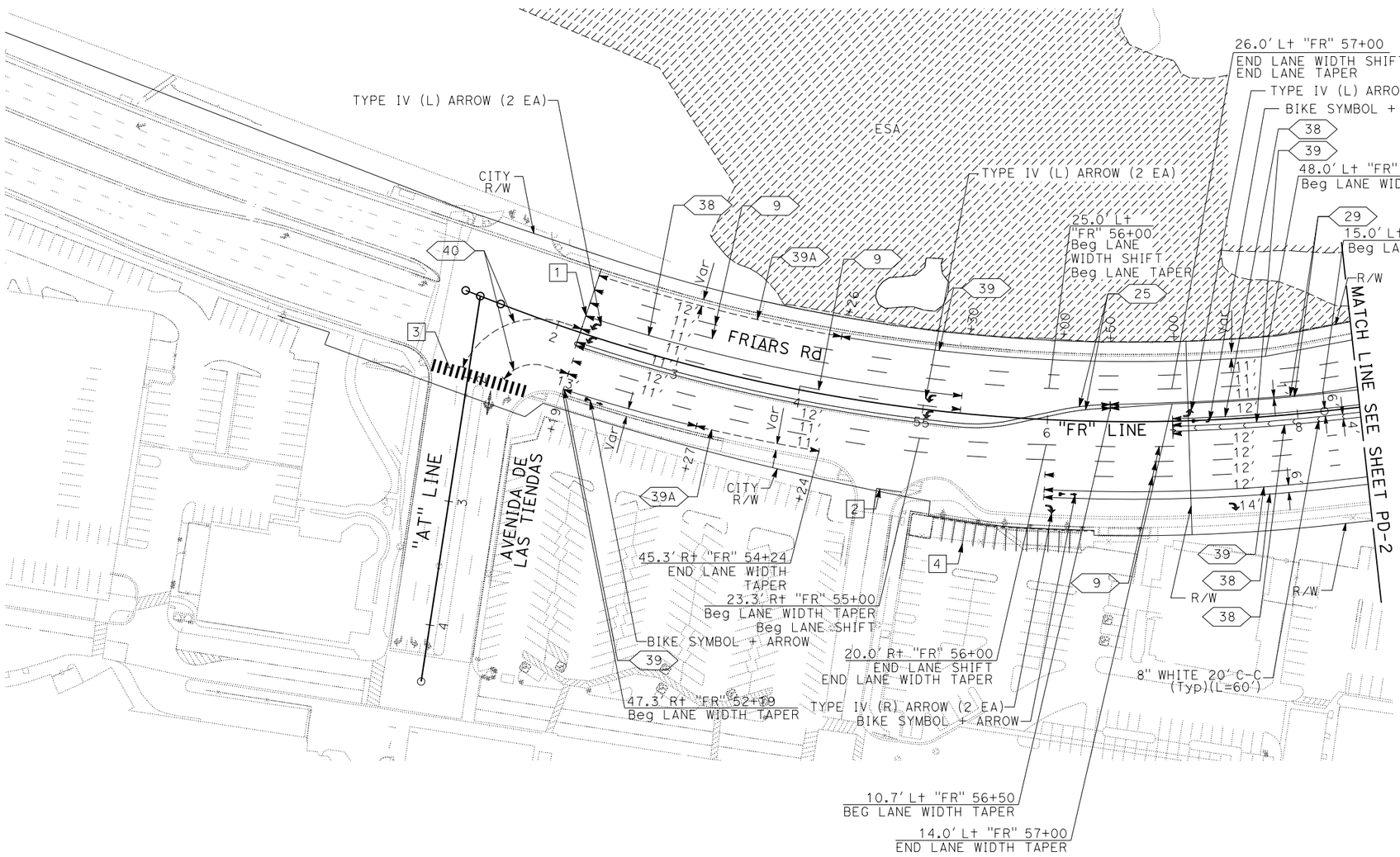

NOTES:

1. 12" WHITE LINE (L=61.6')
2. 12" WHITE LINE (L=20.2')
3. CONTINENTAL CROSSWALK 24" WHITE LINE (L=160')
4. 4" WHITE LINE (L=18') (12 EA)

PAVEMENT DELINEATION PLAN

PD-1

APPROVED FOR PAVEMENT DELINEATION WORK ONLY

SCALE: 1" = 50'

STATE OF CALIFORNIA - DEPARTMENT OF TRANSPORTATION

Caltrans

CONSULTANT FUNCTIONAL SUPERVISOR: CHRIS THOMAS

CALCULATED-DESIGNED BY: JEREMY SCOTT | CHECKED BY: EDUARDO SIMONSEN

REVISED BY | DATE REVISED

LAST REVISION 02-10-16 | DATE PLOTTED => 10-FEB-2016 | TIME PLOTTED => 11:52

BORDER LAST REVISED 7/2/2010 | USERNAME => BillGates | DGN FILE => 1100000064na001.dgn | RELATIVE BORDER SCALE IS IN INCHES 0 1 2 3 | UNIT 2763 | PROJECT NUMBER & PHASE 11000000641

Dist	COUNTY	ROUTE	POST MILES TOTAL PROJECT	SHEET No.	TOTAL SHEETS
11	SD	163	4.1/4.9		XXX

REGISTERED CIVIL ENGINEER DATE

PLANS APPROVAL DATE

REGISTERED PROFESSIONAL ENGINEER EDUARDO G. SIMONSEN No. C82608 Exp. 9/30/16 CIVIL STATE OF CALIFORNIA

THE STATE OF CALIFORNIA OR ITS OFFICERS OR AGENTS SHALL NOT BE RESPONSIBLE FOR THE ACCURACY OR COMPLETENESS OF SCANNED COPIES OF THIS PLAN SHEET.

DOKKEN ENGINEERING
5675 RUFFIN Rd
SUITE 250
SAN DIEGO, CA 92123

CITY OF SAN DIEGO
525 B STREET
SUITE 750
SAN DIEGO, CA 92101

NOTE:

FOR ACCURATE RIGHT OF WAY DATA, CONTACT RIGHT OF WAY ENGINEERING AT THE DISTRICT OFFICE.

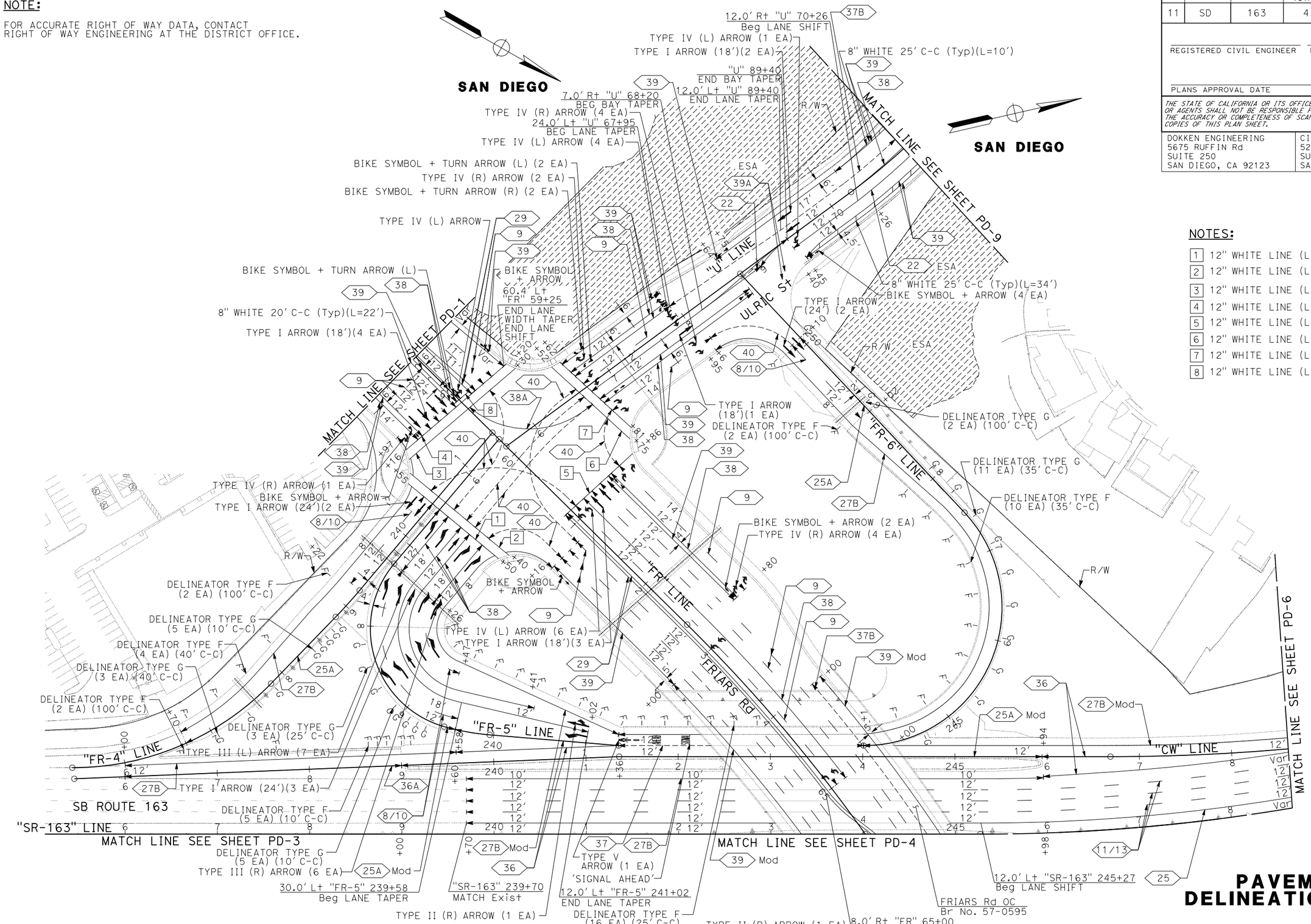

NOTES:

1. 12" WHITE LINE (L=127.3')
2. 12" WHITE LINE (L=139.2')
3. 12" WHITE LINE (L=152.1')
4. 12" WHITE LINE (L=143.7')
5. 12" WHITE LINE (L=98.5')
6. 12" WHITE LINE (L=115.5')
7. 12" WHITE LINE (L=104.8')
8. 12" WHITE LINE (L=24.0')

PAVEMENT DELINEATION PLAN

APPROVED FOR PAVEMENT DELINEATION WORK ONLY

SCALE: 1" = 50'

PD-2

STATE OF CALIFORNIA - DEPARTMENT OF TRANSPORTATION

Caltrans

CONSULTANT FUNCTIONAL SUPERVISOR: CHRIS THOMAS

CALCULATED-DESIGNED BY: JEREMY SCOTT

CHECKED BY: EDUARDO SIMONSEN

REVISED BY

DATE REVISED

LAST REVISION 01-12-16

DATE PLOTTED => 09-FEB-2016

TIME PLOTTED => 16:58

Dist	COUNTY	ROUTE	POST MILES TOTAL PROJECT	SHEET No.	TOTAL SHEETS
11	SD	163	4.1/4.9		XXX

REGISTERED CIVIL ENGINEER DATE

PLANS APPROVAL DATE

REGISTERED PROFESSIONAL ENGINEER EDUARDO G. SIMONSEN No. C82608 Exp. 9/30/16 CIVIL STATE OF CALIFORNIA

THE STATE OF CALIFORNIA OR ITS OFFICERS OR AGENTS SHALL NOT BE RESPONSIBLE FOR THE ACCURACY OR COMPLETENESS OF SCANNED COPIES OF THIS PLAN SHEET.

DOKKEN ENGINEERING
5675 RUFFIN Rd
SUITE 250
SAN DIEGO, CA 92123

CITY OF SAN DIEGO
525 B STREET
SUITE 750
SAN DIEGO, CA 92101

NOTE:

FOR ACCURATE RIGHT OF WAY DATA CONTACT RIGHT OF WAY ENGINEERING AT THE DISTRICT OFFICE.

SAN DIEGO

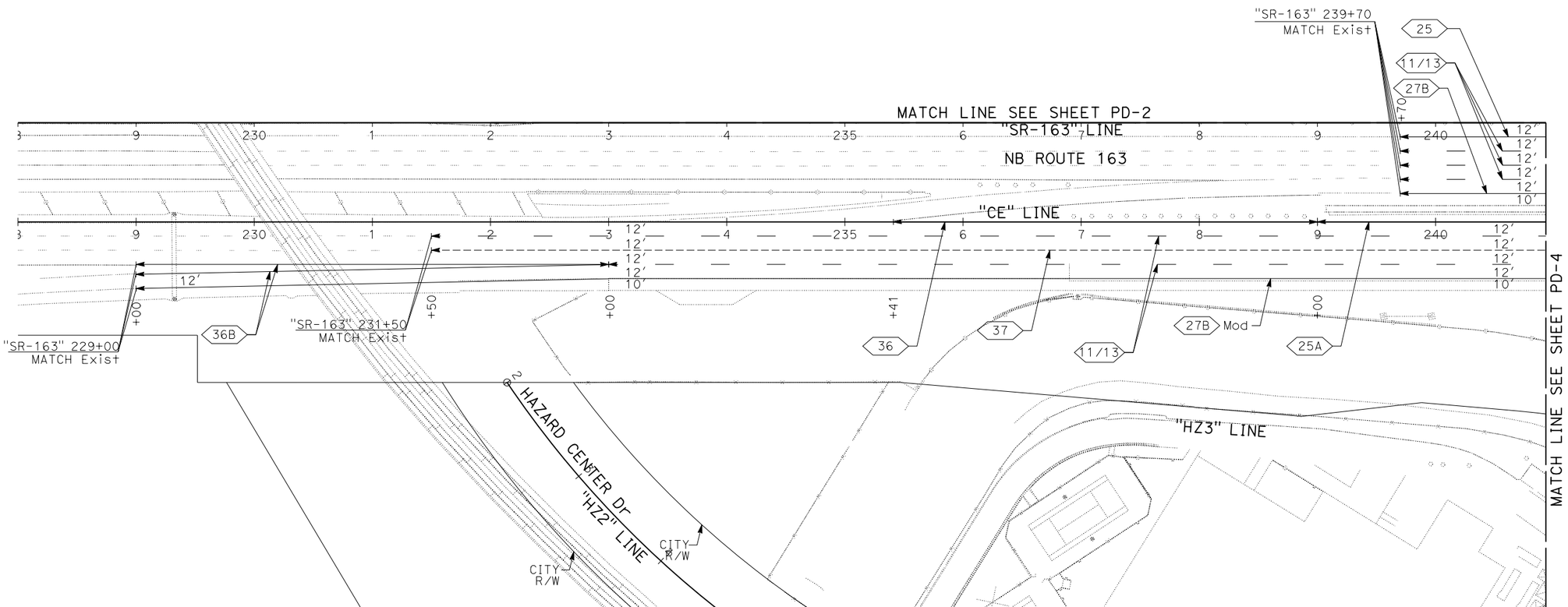

PAVEMENT DELINEATION PLAN

APPROVED FOR PAVEMENT DELINEATION WORK ONLY

SCALE: 1" = 50'

PD-3

STATE OF CALIFORNIA - DEPARTMENT OF TRANSPORTATION

Caltrans

CONSULTANT FUNCTIONAL SUPERVISOR: CHRIS THOMAS

CALCULATED-DESIGNED BY: JEREMY SCOTT

CHECKED BY: EDUARDO SIMONSEN

REVISED BY

DATE REVISED

LAST REVISION 01-12-16

DATE PLOTTED => 09-FEB-2016
TIME PLOTTED => 16:58

Dist	COUNTY	ROUTE	POST MILES TOTAL PROJECT	SHEET No.	TOTAL SHEETS
11	SD	163	4.1/4.9		XXX

REGISTERED CIVIL ENGINEER DATE

PLANS APPROVAL DATE

REGISTERED PROFESSIONAL ENGINEER EDUARDO G. SIMONSEN No. C82608 Exp. 9/30/16 CIVIL STATE OF CALIFORNIA

THE STATE OF CALIFORNIA OR ITS OFFICERS OR AGENTS SHALL NOT BE RESPONSIBLE FOR THE ACCURACY OR COMPLETENESS OF SCANNED COPIES OF THIS PLAN SHEET.

DOKKEN ENGINEERING
5675 RUFFIN Rd
SUITE 250
SAN DIEGO, CA 92123

CITY OF SAN DIEGO
525 B STREET
SUITE 750
SAN DIEGO, CA 92101

NOTE:

FOR ACCURATE RIGHT OF WAY DATA, CONTACT RIGHT OF WAY ENGINEERING AT THE DISTRICT OFFICE.

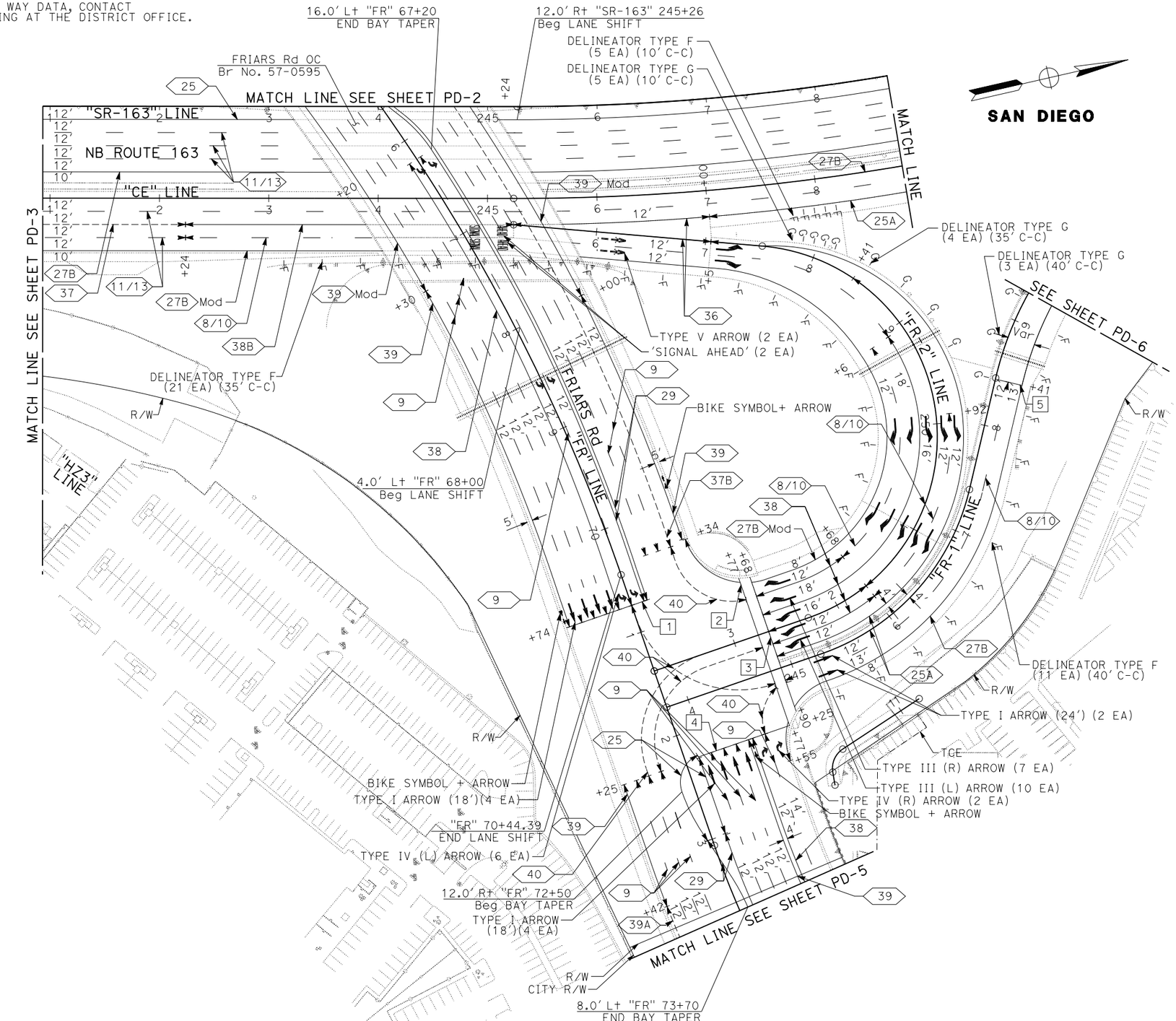

NOTES:

1. 12" WHITE LINE (L=78.0')
2. 12" WHITE LINE (L=142.9')
3. 12" WHITE LINE (L=129.8')
4. 12" WHITE LINE (L=87.9')
5. 12" WHITE LINE (L=25.0')

PAVEMENT DELINEATION PLAN

PD-4

APPROVED FOR PAVEMENT DELINEATION WORK ONLY

SCALE: 1" = 50'

STATE OF CALIFORNIA - DEPARTMENT OF TRANSPORTATION

Caltrans

CONSULTANT FUNCTIONAL SUPERVISOR: CHRIS THOMAS

CALCULATED-DESIGNED BY: JEREMY SCOTT

CHECKED BY: EDUARDO SIMONSEN

REVISED BY

DATE REVISED

LAST REVISION 01-12-16

DATE PLOTTED => 09-FEB-2016
TIME PLOTTED => 16:58

Dist	COUNTY	ROUTE	POST MILES TOTAL PROJECT	SHEET No.	TOTAL SHEETS
11	SD	163	4.1/4.9		XXX

REGISTERED CIVIL ENGINEER DATE

PLANS APPROVAL DATE

REGISTERED PROFESSIONAL ENGINEER EDUARDO G. SIMONSEN No. C82608 Exp. 9/30/16 CIVIL STATE OF CALIFORNIA

THE STATE OF CALIFORNIA OR ITS OFFICERS OR AGENTS SHALL NOT BE RESPONSIBLE FOR THE ACCURACY OR COMPLETENESS OF SCANNED COPIES OF THIS PLAN SHEET.

DOKKEN ENGINEERING
5675 RUFFIN Rd
SUITE 250
SAN DIEGO, CA 92123

CITY OF SAN DIEGO
525 B STREET
SUITE 750
SAN DIEGO, CA 92101

NOTE:

FOR ACCURATE RIGHT OF WAY DATA, CONTACT RIGHT OF WAY ENGINEERING AT THE DISTRICT OFFICE.

NOTES:

1. 12" WHITE LINE (L=94.2')
2. 12" WHITE LINE (L=60.1')
3. CONTINENTAL CROSSWALK 24" WHITE LINE (L=210.0')
4. 12" WHITE LINE (L=84.9')
5. CONTINENTAL CROSSWALK 24" WHITE LINE (L=280.0')
6. CONTINENTAL CROSSWALK 24" WHITE LINE (L=200.0')
7. 12" WHITE LINE (L=54.5')

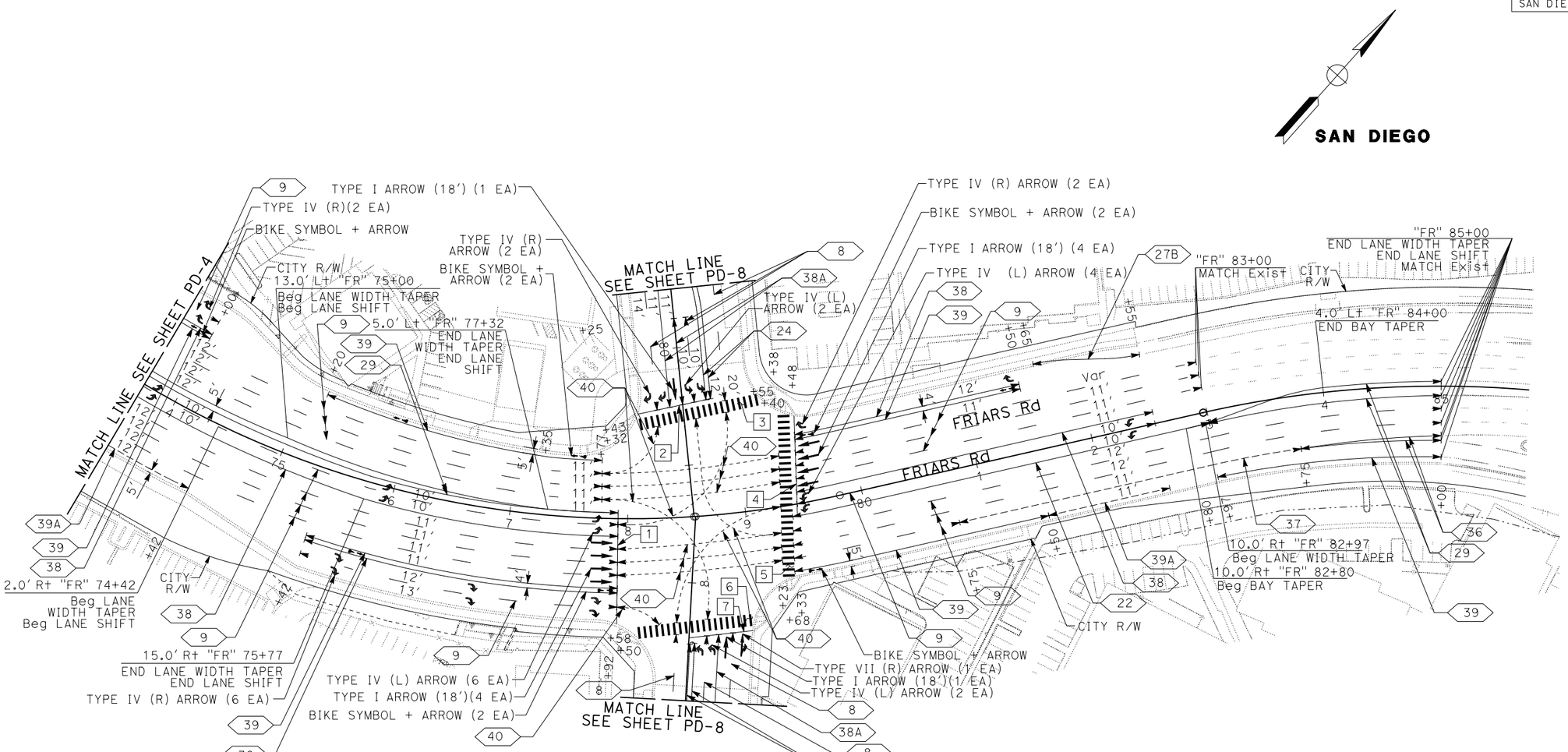

PAVEMENT DELINEATION PLAN

APPROVED FOR PAVEMENT DELINEATION WORK ONLY

SCALE: 1" = 50'

PD-5

STATE OF CALIFORNIA - DEPARTMENT OF TRANSPORTATION

Caltrans

CONSULTANT FUNCTIONAL SUPERVISOR: CHRIS THOMAS

CALCULATED-DESIGNED BY: JEREMY SCOTT

CHECKED BY: EDUARDO SIMONSEN

REVISED BY

DATE REVISED

LAST REVISION 01-12-16

DATE PLOTTED => 09-FEB-2016
TIME PLOTTED => 16:58

Dist	COUNTY	ROUTE	POST MILES TOTAL PROJECT	SHEET No.	TOTAL SHEETS
11	SD	163	4.1/4.9		XXX

REGISTERED CIVIL ENGINEER DATE

PLANS APPROVAL DATE

REGISTERED PROFESSIONAL ENGINEER EDUARDO G. SIMONSEN No. C82608 Exp. 9/30/16 CIVIL STATE OF CALIFORNIA

THE STATE OF CALIFORNIA OR ITS OFFICERS OR AGENTS SHALL NOT BE RESPONSIBLE FOR THE ACCURACY OR COMPLETENESS OF SCANNED COPIES OF THIS PLAN SHEET.

DOKKEN ENGINEERING
5675 RUFFIN Rd
SUITE 250
SAN DIEGO, CA 92123

CITY OF SAN DIEGO
525 B STREET
SUITE 750
SAN DIEGO, CA 92101

NOTE:

FOR ACCURATE RIGHT OF WAY DATA, CONTACT RIGHT OF WAY ENGINEERING AT THE DISTRICT OFFICE.

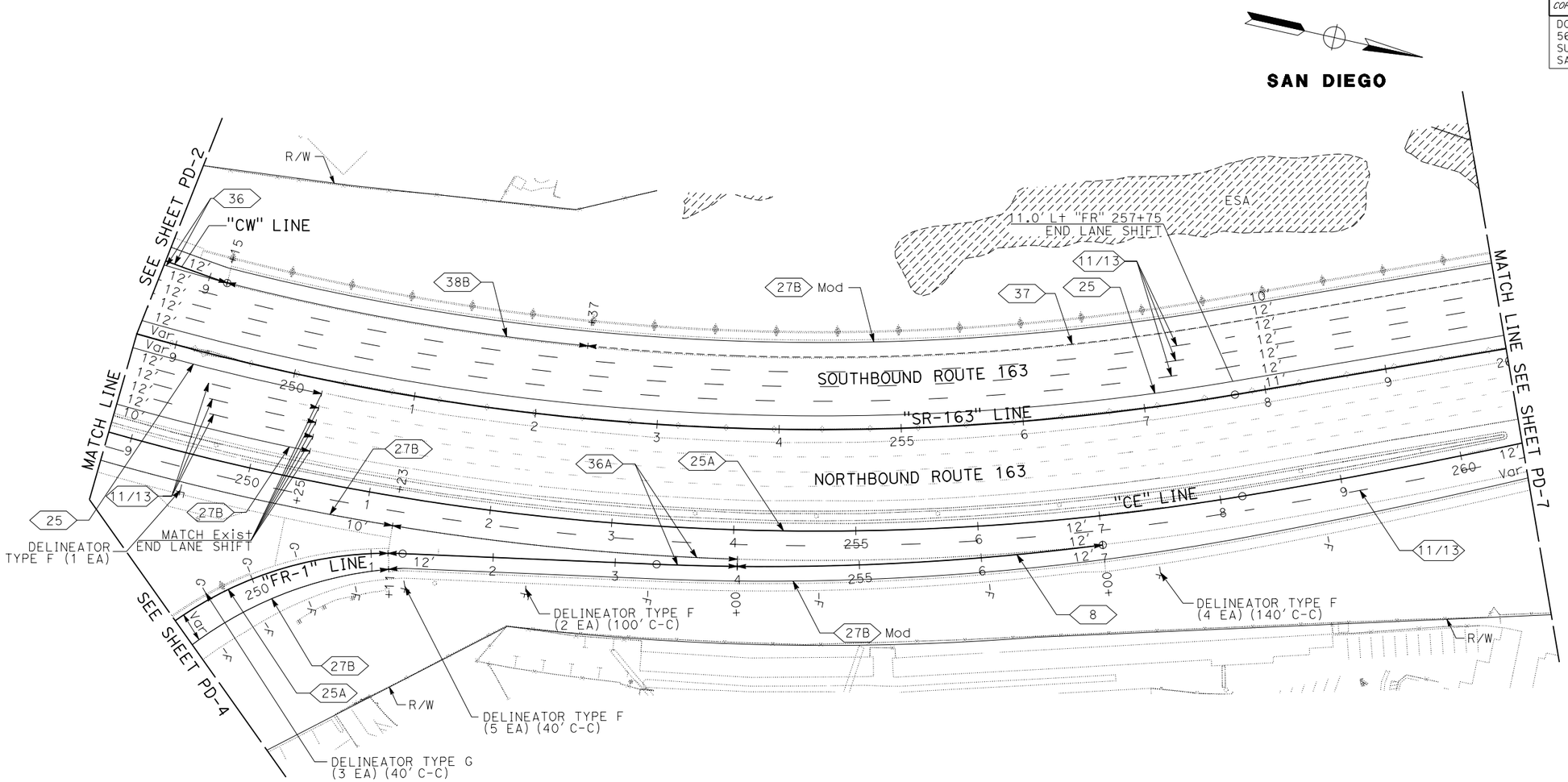

THIS PLAN ACCURATE FOR PAVEMENT DELINEATION WORK ONLY

PAVEMENT DELINEATION PLAN

PD-6

APPROVED FOR PAVEMENT DELINEATION WORK ONLY

SCALE: 1" = 50'

STATE OF CALIFORNIA - DEPARTMENT OF TRANSPORTATION

Caltrans

CONSULTANT FUNCTIONAL SUPERVISOR: CHRIS THOMAS

CALCULATED-DESIGNED BY: JEREMY SCOTT

CHECKED BY: EDUARDO SIMONSEN

REVISED BY

DATE REVISED

LAST REVISION 02-10-16

DATE PLOTTED => 10-FEB-2016
TIME PLOTTED => 08:29

BORDER LAST REVISED 7/2/2010

USERNAME => BillGates
DGN FILE => 1100000064na006.dgn

RELATIVE BORDER SCALE IS IN INCHES 0 1 2 3

UNIT 2763

PROJECT NUMBER & PHASE 11000000641

Dist	COUNTY	ROUTE	POST MILES TOTAL PROJECT	SHEET No.	TOTAL SHEETS
11	SD	163	4.1/4.9		XXX

REGISTERED CIVIL ENGINEER DATE

PLANS APPROVAL DATE

REGISTERED PROFESSIONAL ENGINEER EDUARDO G. SIMONSEN No. C82608 Exp. 9/30/16 CIVIL STATE OF CALIFORNIA

THE STATE OF CALIFORNIA OR ITS OFFICERS OR AGENTS SHALL NOT BE RESPONSIBLE FOR THE ACCURACY OR COMPLETENESS OF SCANNED COPIES OF THIS PLAN SHEET.

DOKKEN ENGINEERING
5675 RUFFIN Rd
SUITE 250
SAN DIEGO, CA 92123

CITY OF SAN DIEGO
525 B STREET
SUITE 750
SAN DIEGO, CA 92101

NOTE:

FOR ACCURATE RIGHT OF WAY DATA, CONTACT RIGHT OF WAY ENGINEERING AT THE DISTRICT OFFICE.

SAN DIEGO

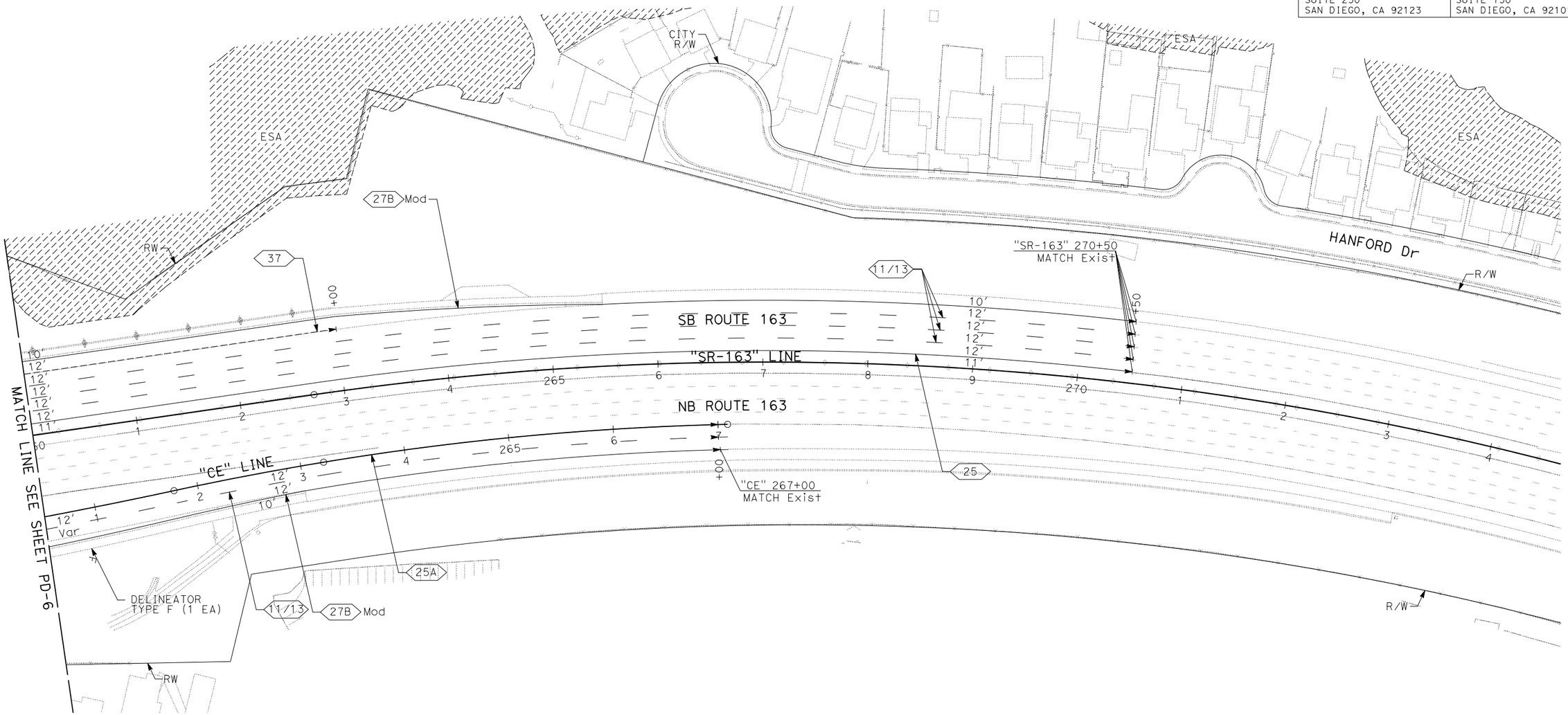

PAVEMENT DELINEATION PLAN

APPROVED FOR PAVEMENT DELINEATION WORK ONLY

SCALE: 1" = 50'

PD-7

STATE OF CALIFORNIA - DEPARTMENT OF TRANSPORTATION

Caltrans

CONSULTANT FUNCTIONAL SUPERVISOR: CHRIS THOMAS

CALCULATED-DESIGNED BY: JEREMY SCOTT

CHECKED BY: EDUARDO SIMONSEN

REVISED BY

DATE REVISED

LAST REVISION 01-12-16

DATE PLOTTED => 09-FEB-2016
TIME PLOTTED => 16:58

Dist	COUNTY	ROUTE	POST MILES TOTAL PROJECT	SHEET No.	TOTAL SHEETS
11	SD	163	4.1/4.9		XXX

REGISTERED CIVIL ENGINEER DATE

PLANS APPROVAL DATE

REGISTERED PROFESSIONAL ENGINEER EDUARDO G. SIMONSEN No. C82608 Exp. 9/30/16 CIVIL STATE OF CALIFORNIA

THE STATE OF CALIFORNIA OR ITS OFFICERS OR AGENTS SHALL NOT BE RESPONSIBLE FOR THE ACCURACY OR COMPLETENESS OF SCANNED COPIES OF THIS PLAN SHEET.

DOKKEN ENGINEERING
5675 RUFFIN Rd
SUITE 250
SAN DIEGO, CA 92123

CITY OF SAN DIEGO
525 B STREET
SUITE 750
SAN DIEGO, CA 92101

NOTE:

FOR ACCURATE RIGHT OF WAY DATA, CONTACT RIGHT OF WAY ENGINEERING AT THE DISTRICT OFFICE.

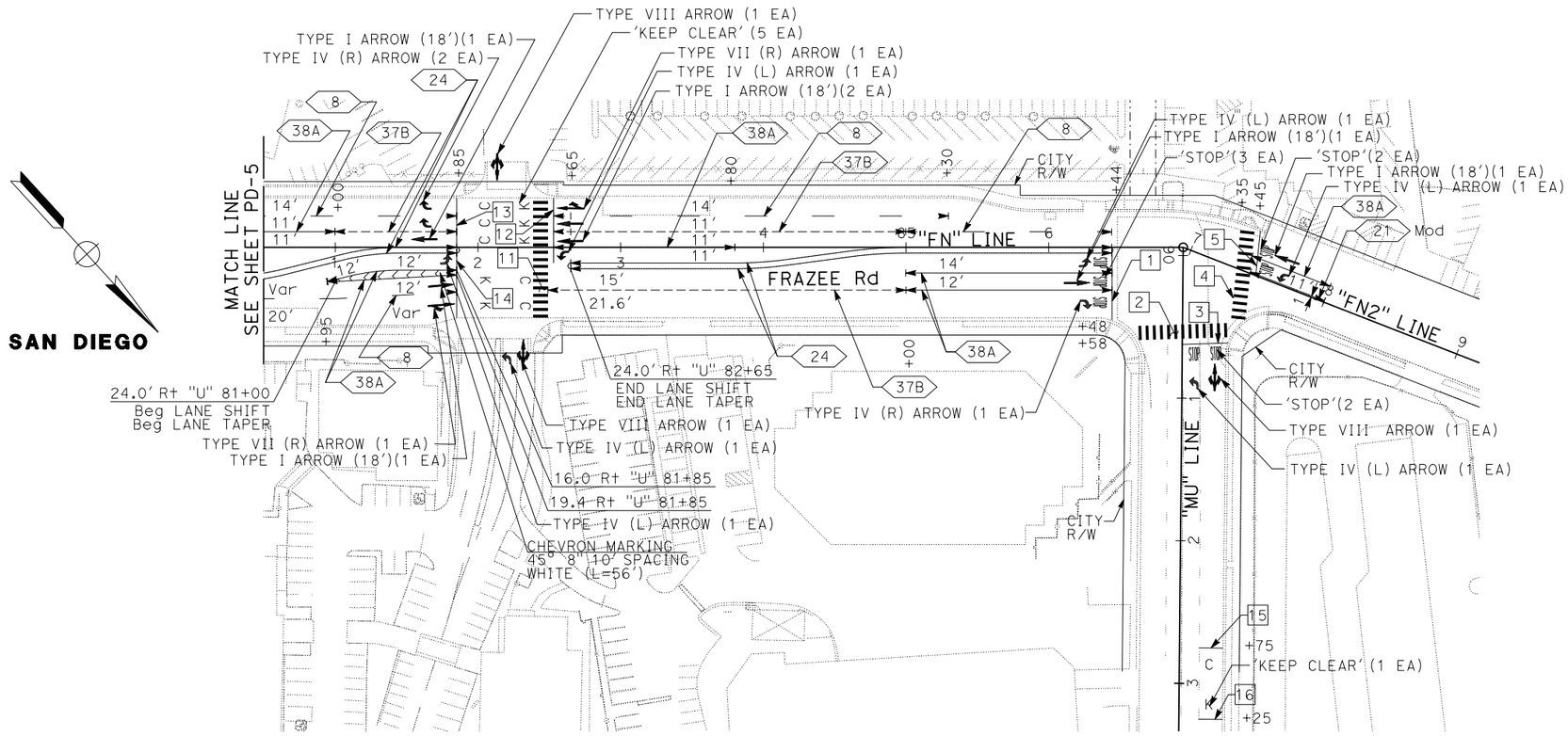

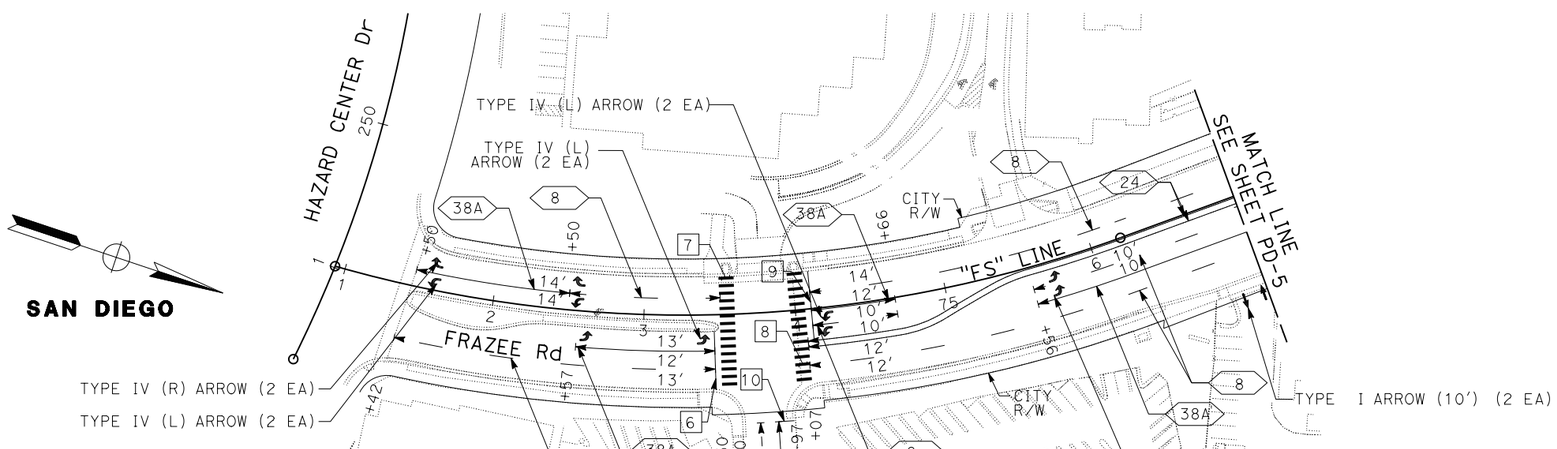

NOTES:

1. 12" WHITE LINE (L=47.5')
2. CONTINENTAL CROSSWALK 24" WHITE LINE (L=130.0')
3. 12" WHITE LINE (L=32.2')
4. CONTINENTAL CROSSWALK 24" WHITE LINE (L=130.0')
5. 12" WHITE LINE (L=30.5')
6. 12" WHITE LINE (L=38.5')
7. CONTINENTAL CROSSWALK 24" WHITE LINE (L=150.0')
8. CONTINENTAL CROSSWALK 24" WHITE LINE (L=150.0')
9. 12" WHITE LINE (L=46.0')
10. 12" WHITE LINE (L=10.3')
11. CONTINENTAL CROSSWALK 24" WHITE LINE (L=170.0'')
12. 12" WHITE LINE (L=45.7')
13. 12" WHITE LINE (L=34.7')
14. 12" WHITE LINE (L=45.4')
15. 12" WHITE LINE (L=17.0')
16. 12" WHITE LINE (L=17.0')

PAVEMENT DELINEATION PLAN

APPROVED FOR PAVEMENT DELINEATION WORK ONLY

SCALE: 1" = 50'

PD-8

STATE OF CALIFORNIA - DEPARTMENT OF TRANSPORTATION

Caltrans

CONSULTANT FUNCTIONAL SUPERVISOR: CHRIS THOMAS

CALCULATED-DESIGNED BY: JEREMY SCOTT | CHECKED BY: EDUARDO SIMONSEN

REVISED BY | DATE REVISED

LAST REVISION 01-12-16 | DATE PLOTTED => 09-FEB-2016 | TIME PLOTTED => 16:58

Dist	COUNTY	ROUTE	POST MILES TOTAL PROJECT	SHEET No.	TOTAL SHEETS
11	SD	163	4.1/4.9		XXX

REGISTERED CIVIL ENGINEER DATE

PLANS APPROVAL DATE

REGISTERED PROFESSIONAL ENGINEER
EDUARDO G. SIMONSEN
No. C82608
Exp. 9/30/16
CIVIL
STATE OF CALIFORNIA

THE STATE OF CALIFORNIA OR ITS OFFICERS OR AGENTS SHALL NOT BE RESPONSIBLE FOR THE ACCURACY OR COMPLETENESS OF SCANNED COPIES OF THIS PLAN SHEET.

DOKKEN ENGINEERING
5675 RUFFIN Rd
SUITE 250
SAN DIEGO, CA 92123

CITY OF SAN DIEGO
525 B STREET
SUITE 750
SAN DIEGO, CA 92101

NOTE:

FOR ACCURATE RIGHT OF WAY DATA, CONTACT RIGHT OF WAY ENGINEERING AT THE DISTRICT OFFICE.

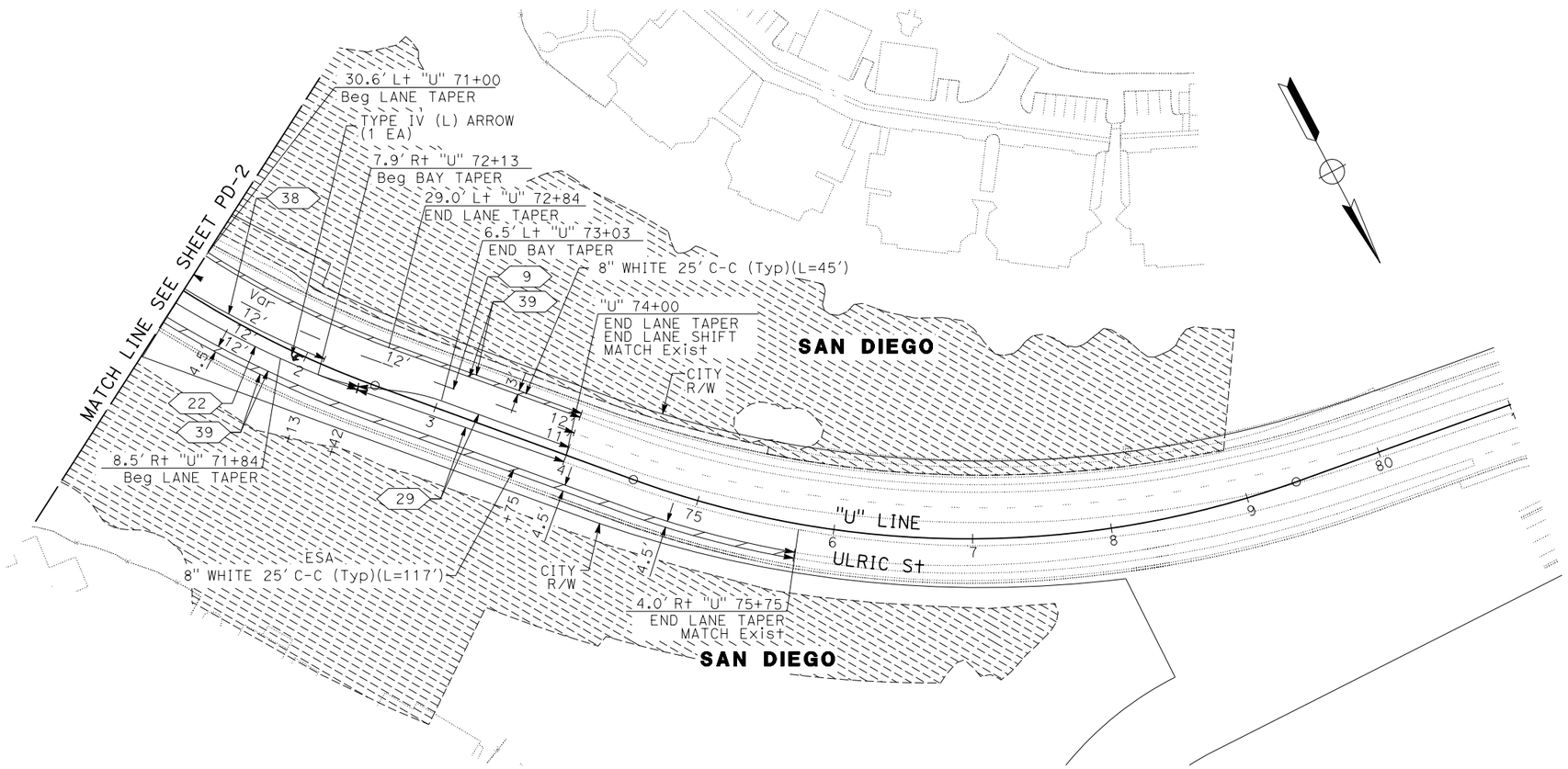

PAVEMENT DELINEATION PLAN

APPROVED FOR PAVEMENT DELINEATION WORK ONLY

SCALE: 1" = 50'

PD-9

STATE OF CALIFORNIA - DEPARTMENT OF TRANSPORTATION

Caltrans

CONSULTANT FUNCTIONAL SUPERVISOR: CHRIS THOMAS

CALCULATED-DESIGNED BY: JEREMY SCOTT

CHECKED BY: EDUARDO SIMONSEN

REVISED BY

DATE REVISED

LAST REVISION 01-12-16

DATE PLOTTED => 09-FEB-2016
TIME PLOTTED => 16:58

APPENDIX S

CUMULATIVE PROJECTS INFORMATION

TABLE 9–1
NEAR-TERM (OPENING DAY 2018) TRIP GENERATION TABLE – PROJECT PHASE I

Description and Size	Trip Rate & Credits	ADT[a]	AM Peak Hour					PM Peak Hour				
			% of ADT	In: Out Split	Volume			% of ADT	In: Out Split	Volume		
					In	Out	Total			In	Out	Total
Proposed												
Hotel[b]	Trip Rate (10.0 / Room)[c]	7,000	6%	60:40	252	168	420	8%	60:40	336	224	560
700 Rooms	*Transit / Mixed-Use Credit (5%)*[d]	-350			-23	-15	-38			-20	-14	-34
(reduced from existing 954 rooms)	Cumulative (100%)	6,650			229	153	382			316	210	526
	Pass-By (0%)	0			0	0	0			0	0	0
	Driveway	6,650			229	153	382			316	210	526
Convention Space	Trip Rate (30 / 1,000 SF)[f,g]	4,264	13%	90:10	499	55	554	14%	20:80	119	478	597
Overall: 177,137 SF	*Transit / Mixed-Use Credit (5%)*[d]	-213			-45	-5	-50			-7	-29	-36
Ancillary[e]*: 700 rooms x 50 SF/room*	Cumulative (100%)	4,051			454	50	504			112	449	561
= 35,000 SF	Pass-By (0%)	0			0	0	0			0	0	0
Effective: 177,137 – 35,000	Driveway	4,051			454	50	504			112	449	561
Residential Parcel 1	Trip Rate (6 / DU)[h]	960	8%	20:80	15	62	77	9%	70:30	60	26	86
160 Dwelling Units in 1.70 acres	*Transit Credit (5%)*[i]	*-48*			*-1*	*-6*	*-7*			*-4*	*-1*	*-5*
(Over 20 DU/ac)	*Mixed-use Credit (10%)*[j]	*-96*			*-1*	*-5*	*-6*			*-6*	*-3*	*-9*
	Cumulative (100%)	816			13	51	64			50	22	72
	Pass-By (0%)	0			0	0	0			0	0	0
	Driveway	816			13	51	64			50	22	72
Residential Parcel 2	Trip Rate (6 / DU)[h]	1,650	8%	20:80	26	106	132	9%	70:30	104	45	149
275 Dwelling Units in 2.53 acres	*Transit Credit (5%)*[i]	*-83*			*-2*	*-10*	*-12*			*-6*	*-3*	*-9*
(Over 20 DU/ac)	*Mixed-use Credit (10%)*[j]	*-165*			*-2*	*-9*	*-11*			*-11*	*-4*	*-15*
(new use)	Cumulative (100%)	1,402			22	87	109			87	38	125
	Pass-By (0%)	0			0	0	0			0	0	0
	Driveway	1,402			22	87	109			87	38	125

TABLE 9–1
NEAR-TERM (OPENING DAY 2018) TRIP GENERATION TABLE – PROJECT PHASE I

Description and Size	Trip Rate & Credits	ADT[a]	AM Peak Hour					PM Peak Hour				
			% of ADT	In: Out Split	Volume			% of ADT	In: Out Split	Volume		
					In	Out	Total			In	Out	Total
Proposed Subtotal	*Cumulative*	*12,919*			*718*	*341*	*1,059*			*565*	*719*	*1,284*
	Pass-By	*0*			*0*	*0*	*0*			*0*	*0*	*0*
	Driveway	*12,919*			*718*	*341*	*1,059*			*565*	*719*	*1,284*
Existing												
Hotel	Trip Rate (10.0 / Room)	9,540	6%	60:40	343	229	572	8%	60:40	458	305	763
954 Rooms	*Transit / Mixed-Use Credit (0%)*	*0*			*0*	*0*	*0*			*0*	*0*	*0*
	Cumulative (100%)	9,540			343	229	572			458	305	763
	Pass-By (0%)	0			0	0	0			0	0	0
	Driveway	9,540			343	229	572			458	305	763
Convention Space	Trip Rate (30 / 1,000 SF)	4,952	13%	90:10	580	64	644	14%	20:80	139	554	693
Overall: 212,762 SF	*Transit / Mixed-Use Credit (0%)*	0			0	0	0			0	0	0
Ancillary: 954 rooms x 50 SF/room = 47,700 SF	Cumulative (100%)	4,952			580	64	644			139	554	693
Effective: 212,762 – 47,700 = 165,062 SF	Pass-By (0%)	0			0	0	0			0	0	0
	Driveway	4,952			580	64	644			139	554	693
Spa	Trip Rate (40 / 1,000 SF)	286	13%	90:10	33	4	37	14%	20:80	8	32	40
Overall: 14,298 SF	*Transit / Mixed-Use Credit (0%)*	*0*			*0*	*0*	*0*			*0*	*0*	*0*
Effective (50%): 7,149 SF[k]	Cumulative (100%)	286			33	4	37			8	32	40
	Pass-By (0%)	0			0	0	0			0	0	0
	Driveway	286			33	4	37			8	32	40
Restaurants	Trip Rate (100 / 1,000 SF)	230	1%	60:40	1	1	2	8%	70:30	13	5	18
Overall: 25,652 SF	*Transit / Mixed-Use Credit (0%)*	*0*			*0*	*0*	*0*			*0*	*0*	*0*
Effective: 2,304 SF[l]	Cumulative (90%)	207			1	1	2			12	4	16
	Pass-By (10%)	23			0	0	0			1	1	2
	Driveway	230			1	1	2			13	5	18

TABLE 9–1
NEAR-TERM (OPENING DAY 2018) TRIP GENERATION TABLE – PROJECT PHASE I

Description and Size	Trip Rate & Credits	ADT[a]	AM Peak Hour					PM Peak Hour				
			% of ADT	In: Out Split	Volume			% of ADT	In: Out Split	Volume		
					In	Out	Total			In	Out	Total
Existing Subtotal	*Cumulative*	*14,985*			*957*	*298*	*1,255*			*617*	*895*	*1,512*
	Pass-By	*23*			*0*	*0*	*0*			*1*	*1*	*2*
	Driveway	*15,008*			*957*	*298*	*1,255*			*618*	*896*	*1,514*
Trip Generation Summary												
Net Project Total (Proposed – Existing)	*Cumulative*	*(2,066)*			*(239)*	*43*	*(196)*			*(52)*	*(176)*	*(228)*
	Pass-By	*(23)*			*0*	*0*	*0*			*(1)*	*(1)*	*(2)*
	Driveway	*(2,089)*			*(239)*	*43*	*(196)*			*(53)*	*(177)*	*(230)*

Footnotes:

a. Traffic volumes expressed in vehicles per day.
b. Per the City's Trip Generation Manual, the hotel trip rate of 10 trips/ room was used.
c. Trip rate for Hotel used with AM splits as 6 % ADT with 60:40 (In:Out). PM splits are 8% ADT with 60:40 (In:Out).
d. A combined 5% mixed-use/ transit credit is assumed to account for interaction with the Fashion Valley Mall and transit center respectively.
e. Based on the ULI shared parking manual, the hotel trip rate includes convention space up to 50 SF/ room. For 705 rooms, this is calculated as 35,250 SF. Convention Space exceeding 35,250 SF includes additional trip generation.
f. 30 trips/ 1,000 SF calculated based on historical traffic count data at the project site as a part of the approved Atlas Specific Plan.
g. The *City of San Diego Trip Generation Manual* does not include trip rates for Convention Space. Therefore, peak hour splits for Convention Space assumed to be similar to Commercial Office with heavy AM inbound and PM outbound trips. The AM splits are 13 % ADT with 90:10 (In:Out). PM splits are 14% ADT with 20:80 (In:Out).
h. Trip rate for multi-family units over 20 DU/acre used with AM splits as 8 % ADT with 20:80 (In:Out). PM splits are 9% ADT with 70:30 (In:Out).
i. Transit credits for residential land uses are 5% ADT, 9% AM and 6% PM peak hours.
j. Community Mixed-use credits for residential land uses are 10% ADT, 8% AM and 10% PM peak hours.
k. The existing spa is 14,298 SF that serves both hotel and non-hotel guests. To be conservative, only 50% of the spa square footage was assumed as credit towards its demolition to account for trips by non-hotel guests.
l. Currently, there are several food and beverage establishments that total 25,652 SF. Most of these establishments are site serving with the exception of Kelly's restaurant. Therefore, to be conservative, a nominal amount of 2,304 SF (which is 50% of Kelly's Restaurant) was assumed as credit.

General Notes:

1. All trip rates and percentages are based on the City of San Diego Trip Generation Manual, May 2003.
2. Driveway Trips—vehicles entering and exiting project driveways (Driveway = Cumulative + Pass-By).
3. Cumulative Trips—net new vehicles added to the network.
4. Pass-By Trips—vehicles already on the street network diverting to the project site.

TABLE 10–1
YEAR 2022 TRIP GENERATION TABLE – PROJECT PHASES I AND II

Description and Size	Trip Rate & Credits	ADT[a]	AM Peak Hour					PM Peak Hour				
			% of ADT	In: Out Split	Volume			% of ADT	In: Out Split	Volume		
					In	Out	Total			In	Out	Total
Year 2018												
Hotel[b]	Trip Rate (10.0 / Room)[c]	7,000	6%	60:40	252	168	420	8%	60:40	336	224	560
700 Rooms	*Transit / Mixed-Use Credit (5%)*[d]	-350			-23	-15	-38			-20	-14	-34
(reduced from existing 954 rooms)	Cumulative (100%)	6,650			229	153	382			316	210	526
	Pass-By (0%)	0			0	0	0			0	0	0
	Driveway	6,650			229	153	382			316	210	526
Convention Space	Trip Rate (30 / 1,000 SF)[f,g]	4,264	13%	90:10	499	55	554	14%	20:80	119	478	597
Overall: 177,137 SF	*Transit / Mixed-Use Credit (5%)*[d]	-213			-45	-5	-50			-7	-29	-36
Ancillary[e]*: 700 rooms x 50 SF/room =*	Cumulative (100%)	4,051			454	50	504			112	449	561
35,000 SF	Pass-By (0%)	0			0	0	0			0	0	0
Effective: 177,137 – 35,000	Driveway	4,051			454	50	504			112	449	561
Residential Parcel 1	Trip Rate (6 / DU)[h]	960	8%	20:80	15	62	77	9%	70:30	60	26	86
160 Dwelling Units in 1.70 acres	*Transit Credit (5%)*[i]	*-48*			*-1*	*-6*	*-7*			*-4*	*-1*	*-5*
(Over 20 DU/ac)	*Mixed-use Credit (10%)*[j]	*-96*			*-1*	*-5*	*-6*			*-6*	*-3*	*-9*
	Cumulative (100%)	816			13	51	64			50	22	72
	Pass-By (0%)	0			0	0	0			0	0	0
	Driveway	816			13	51	64			50	22	72
Residential Parcel 2	Trip Rate (6 / DU)[h]	1,650	8%	20:80	26	106	132	9%	70:30	104	45	149
275 Dwelling Units in 2.53 acres	*Transit Credit (5%)*[i]	*-83*			*-2*	*-10*	*-12*			*-6*	*-3*	*-9*
(Over 20 DU/ac)	*Mixed-use Credit (10%)*[j]	*-165*			*-2*	*-9*	*-11*			*-11*	*-4*	*-15*
	Cumulative (100%)	1,402			22	87	109			87	38	125
	Pass-By (0%)	0			0	0	0			0	0	0
	Driveway	1,402			22	87	109			87	38	125

TABLE 10–1
YEAR 2022 TRIP GENERATION TABLE – PROJECT PHASES I AND II

Description and Size	Trip Rate & Credits	ADT[a]	AM Peak Hour					PM Peak Hour				
			% of ADT	In: Out Split	Volume			% of ADT	In: Out Split	Volume		
					In	Out	Total			In	Out	Total
Year 2022												
Residential Parcel 3	Trip Rate (6 / DU)[h]	1,530	8%	20:80	24	98	122	9%	70:30	97	41	138
255 Dwelling Units in 1.92 acres	*Transit Credit (5%)*[i]	*-76*			*-3*	*-8*	*-11*			*-5*	*-3*	*-8*
(Over 20 DU/ac)	*Mixed-use Credit (10%)*[j]	*-153*			*-3*	*-8*	*-11*			*-9*	*-6*	*-15*
(new use)	Cumulative (100%)	1,301			18	82	100			83	32	115
	Pass-By (0%)	0			0	0	0			0	0	0
	Driveway	1,301			18	82	100			83	32	115
Residential Parcel 4	Trip Rate (6 / DU)[h]	900	8%	20:80	14	58	72	9%	70:30	57	24	81
150 Dwelling Units in 1.25 acres	*Transit Credit (5%)*[i]	*-45*			*-1*	*-5*	*-6*			*-4*	*-1*	*-5*
(Over 20 DU/ac)	*Mixed-use Credit (10%)*[j]	*-90*			*-1*	*-5*	*-6*			*-6*	*-2*	*-8*
(new use)	Cumulative (100%)	765			12	48	60			47	21	68
	Pass-By (0%)	0			0	0	0			0	0	0
	Driveway	765			12	48	60			47	21	68
Proposed Subtotal	*Cumulative*	*14,985*			*748*	*471*	*1,219*			*695*	*772*	*1,467*
	Pass-By	*0*			*0*	*0*	*0*			*0*	*0*	*0*
	Driveway	*14,985*			*748*	*471*	*1,219*			*695*	*772*	*1,467*
Existing												
Hotel	Trip Rate (10.0 / Room)	9,540	6%	60:40	343	229	572	8%	60:40	458	305	763
954 Rooms	*Transit / Mixed-Use Credit (0%)*	*0*			*0*	*0*	*0*			*0*	*0*	*0*
	Cumulative (100%)	9,540			343	229	572			458	305	763
	Pass-By (0%)	0			0	0	0			0	0	0
	Driveway	9,540			343	229	572			458	305	763
Convention Space	Trip Rate (30 / 1,000 SF)	4,952	13%	90:10	580	64	644	14%	20:80	139	554	693
Overall: 212,762 SF	*Transit / Mixed-Use Credit (0%)*	0			0	0	0			0	0	0
Ancillary: 954 rooms x 50 SF/room = 47,700 SF	Cumulative (100%)	4,952			580	64	644			139	554	693
Effective: 212,762 – 47,700	Pass-By (0%)	0			0	0	0			0	0	0
= 165,062 SF	Driveway	4,952			580	64	644			139	554	693

TABLE 10–1
YEAR 2022 TRIP GENERATION TABLE – PROJECT PHASES I AND II

Description and Size	Trip Rate & Credits	ADT[a]	AM Peak Hour					PM Peak Hour				
			% of ADT	In: Out Split	Volume			% of ADT	In: Out Split	Volume		
					In	Out	Total			In	Out	Total
Spa	Trip Rate (40 / 1,000 SF)	286	13%	90:10	33	4	37	14%	20:80	8	32	40
Overall: 14,298 SF	*Transit / Mixed-Use Credit (0%)*	*0*			*0*	*0*	*0*			*0*	*0*	*0*
Effective (50%): 7,149 SF[k]	Cumulative (100%)	286			33	4	37			8	32	40
	Pass-By (0%)	0			0	0	0			0	0	0
	Driveway	286			33	4	37			8	32	40
Restaurants	Trip Rate (100 / 1,000 SF)	230	1%	60:40	1	1	2	8%	70:30	13	5	18
Overall: 25,652 SF	*Transit / Mixed-Use Credit (0%)*	*0*			*0*	*0*	*0*			*0*	*0*	*0*
Effective: 2,304 SF[l]	Cumulative (90%)	207			1	1	2			12	4	16
	Pass-By (10%)	23			0	0	0			1	1	2
	Driveway	230			1	1	2			13	5	18
Existing Subtotal	*Cumulative*	*14,985*			*957*	*298*	*1,255*			*617*	*895*	*1,512*
	Pass-By	*23*			*0*	*0*	*0*			*1*	*1*	*2*
	Driveway	*15,008*			*957*	*298*	*1,255*			*618*	*896*	*1,514*
Trip Generation Summary												
Net Project Total (Proposed – Existing)	*Cumulative*	*0*			*(209)*	*173*	*(36)*			*78*	*(123)*	*(45)*
	Pass-By	*(23)*			*0*	*0*	*0*			*(1)*	*(1)*	*(2)*
	Driveway	*(23)*			*(209)*	*173*	*(36)*			*77*	*(124)*	*(47)*

TABLE 10–1
YEAR 2022 TRIP GENERATION TABLE – PROJECT PHASES I AND II

Description and Size	Trip Rate & Credits	ADT[a]	AM Peak Hour					PM Peak Hour				
			% of ADT	In: Out Split	Volume			% of ADT	In: Out Split	Volume		
					In	Out	Total			In	Out	Total

Footnotes:

a. Traffic volumes expressed in vehicles per day.
b. Per the City's Trip Generation Manual, the hotel trip rate of 10 trips/ room was used.
c. Trip rate for Hotel used with AM splits as 6 % ADT with 60:40 (In:Out). PM splits are 8% ADT with 60:40 (In:Out).
d. No transit credits assumed for hotel land uses.
e. Based on the ULI shared parking manual, the hotel trip rate includes convention space up to 50 SF/ room. For 705 rooms, this is calculated as 35,250 SF. Convention Space exceeding 35,250 SF includes additional trip generation.
f. 30 trips/ 1,000 SF calculated based on historical traffic count data at the project site as a part of the approved Atlas Specific Plan.
g. The *City of San Diego Trip Generation Manual* does not include trip rates for Convention Space. Therefore, peak hour splits for Convention Space assumed to be similar to Commercial Office with heavy AM inbound and PM outbound trips. The AM splits are 13 % ADT with 90:10 (In:Out). PM splits are 14% ADT with 20:80 (In:Out).
h. Trip rate for multi-family units over 20 DU/acre used with AM splits as 8 % ADT with 20:80 (In:Out). PM splits are 9% ADT with 70:30 (In:Out).
i. Transit credits for residential land uses are 5% ADT, 9% AM and 6% PM peak hours.
j. Community Mixed-use credits for residential land uses are 10% ADT, 8% AM and 10% PM peak hours.
k. The existing spa is 14,298 SF that serves both hotel and non-hotel guests. To be conservative, only 50% of the spa square footage was assumed as credit towards its demolition to account for trips by non-hotel guests.
l. Currently, there are several food and beverage establishments that total 25,652 SF. Most of these establishments are site serving with the exception of Kelly's restaurant. Therefore, to be conservative, a nominal amount of 2,304 SF (which is 50% of Kelly's Restaurant) was assumed as credit.

General Notes:

1. All trip rates and percentages are based on the City of San Diego Trip Generation Manual, May 2003.
2. Driveway Trips—vehicles entering and exiting project driveways (Driveway = Cumulative + Pass-By).
3. Cumulative Trips—net new vehicles added to the network.
4. Pass-By Trips—vehicles already on the street network diverting to the project site.

APPENDIX T

MITIGATION MONITORING REPORT PROGRAM

MEMORANDUM

LINSCOTT LAW & GREENSPAN
engineers

Engineers & Planners
Traffic
Transportation
Parking

Linscott, Law & Greenspan, Engineers
4542 Ruffner Street
Suite 100
San Diego , CA 92111
858.300.8800 T
858.300.8810 F
www.llgengineers.com

Pasadena
Irvine
San Diego
Woodland Hills

Subject: USD Master Plan Update – Mitigation Monitoring Program

The USD Master Plan Update project (Project) is calculated to have a significant direct impact at the following intersection:

a) Linda Vista Road / Alcala Apartments Entrance.

As explained in *Section 2.3* of the Transportation Impact Analysis study prepared for the Project, Project impacts are based on proposed increases to Full Time Equivalent (FTE) students. Although the study bases ADT on FTE, it is unknown whether an increase in FTE will actually create the ADT increase that is assumed. Therefore, the timing of the implementation of the mitigation measure for the impacted intersection listed above should be tied to the following Mitigation Monitoring Report Program (MMRP). The requirements of the monitoring program are outlined below:

1. USD will submit annual FTE numbers to the City of San Diego within 6 months of the beginning of the Fall semester. Applicable increases in FTE, as summarized in 2) and / or 4) below, will trigger the need to conduct a MMRP study reviewing the conditions at the subject intersection.

2. USD will submit an MMRP study for the Linda Vista Road / Alcala Apartments Entrance intersection at 7,500 FTE, as described in *Table 12–3: Sensitivity Analysis Results*, of the Project's Transportation Impact Analysis study. As summarized in *Table 12-3*, the significant impact at the Linda Vista Road / Alcala Apartments Entrance is expected with the addition of <u>500 FTE</u>.

3. Once an applicable increase in FTE triggers the need to conduct an MMRP study, USD will conduct AM and PM peak hour intersection counts at the subject intersection. The counts should be done for one day on a Tuesday, Wednesday, or Thursday when school is in session.

   Two analyses will be conducted. The subject intersection will be analyzed to determine if a significant impact is caused by USD traffic based on the City of San Diego Level of Service criteria. The LOS and delay calculated under "Near-Term without Project" conditions in the Project's Transportation Impact Analysis study will serve as the baseline for comparing LOS and delay in the MMRP. A peak hour traffic signal warrant will also be conducted using the peak hour traffic counts.

   If the mitigation monitoring program identifies a significant impact <u>and</u> if the peak hour signal warrant shows that the warrant is met, USD will be responsible for implementing the intersection mitigation measure of signalizing the intersection, providing a dedicated southbound left turn lane and a dedicated southbound right turn lane, and coordinating the signal with the downstream signal at Via las Cumbres to the east.

If the mitigation monitoring program identifies a significant impact, but signal warrants are not met, an alternative mitigation measure restricting left-turns out of the Alcala Apartments Entrance by constructing a raised median within Linda Vista Road will be implemented.

The MMRP study, including the intersection and signal warrant analyses, must be completed and turned into the City's Transportation Development Section each year an MMRP study is needed.

4. If implementation of the mitigation measures is not found to be necessary under the FTE increases outlined in 2) above, USD will be responsible for monitoring the conditions at the intersection(s) with each subsequent increase of 500 FTE (500 FTE, 1,000 FTE, 1,500 FTE etc.).

5. USD will be responsible for monitoring the intersection until the need for one of the mitigation measures is triggered, or when the FTE increase reaches 3,000 FTE.

cc: File

HELIX
Environmental Planning

University of San Diego Master Plan Update and Conditional Use Permit Amendment

Biological Technical Report

December 2016

Prepared for:
MW Steele Group
1805 Newton Avenue, Suite A
San Diego, CA 92113

Prepared by:
HELIX Environmental Planning, Inc.
7578 El Cajon Boulevard
La Mesa, CA 91942

University of San Diego Master Plan Update and Conditional Use Permit Amendment

PTS No. 417090
Biological Technical Report

Prepared for:

MW Steele Group
1805 Newton Avenue, Suite A
San Diego, CA 92113

Prepared by:

HELIX Environmental Planning, Inc.
7578 El Cajon Boulevard
La Mesa, CA 91942
619-462-1515

December 2016

UNIVERSITY OF SAN DIEGO MASTER PLAN UPDATE
AND CONDITIONAL USE PERMIT AMENDMENT
BIOLOGICAL TECHNICAL REPORT

TABLE OF CONTENTS

Section	Title	Page
1.0	INTRODUCTION	1
	1.1 Purpose of the Report	1
	1.2 Project Location	1
	1.3 Project Background and Description	1
2.0	SURVEY METHODS	3
	2.1 Literature Review	3
	2.2 General Biological Survey	3
	2.3 Jurisdictional Delineation	4
	2.4 Sensitive Plant Survey	4
	2.5 Survey Limitations	4
	2.6 Nomenclature	4
3.0	SURVEY RESULTS	4
	3.1 Physical Characteristics	4
	3.1.1 Topography and Soils	5
	3.1.2 Land Uses	5
	3.1.3 Potential Jurisdictional Waters/Wetlands	5
	3.2 Biological Resources	7
	3.2.1 Botanical Resources	7
	3.2.2 Zoological Resources	15
	3.2.3 Wildlife Corridors	18
4.0	REGULATORY CONTEXT	18
	4.1 Federal	18
	4.1.1 Clean Water Act	18
	4.1.2 Migratory Bird Treaty Act	18
	4.2 State	19
	4.2.1 California Environmental Quality Act	19
	4.2.2 California Fish and Game Code	19
	4.3 City of San Diego	20
	4.3.1 Multiple Species Conservation Program Subarea Plan	20
	4.3.2 Environmentally Sensitive Lands Regulations	20
	4.3.3 Biology Guidelines	21

TABLE OF CONTENTS (cont.)

Section	Title	Page
5.0	REGIONAL CONTEXT	21
	5.1 Multiple Species Conservation Program Evaluation	21
	5.1.1 Multi-habitat Planning Area	21
	5.1.2 Multi-habitat Planning Area Land Use Adjacency Guidelines	23
	5.1.3 Covered Species	23
6.0	PROJECT IMPACT ANALYSIS	23
	6.1 Criteria for Determining Impact Significance	23
	6.2 Direct Impacts	24
	6.2.1 Direct Impacts to Vegetation Communities/Land Cover Types	24
	6.2.2 Direct Impacts to Sensitive Plant Species	26
	6.2.3 Direct Impacts to Sensitive Animal Species	26
	6.2.4 Direct Impacts to Wildlife Corridors	27
	6.3 Indirect Impacts	27
	6.3.1 Indirect Impacts From Drainage and Toxics	28
	6.3.2 Indirect Impacts From Lighting	28
	6.3.3 Indirect Impacts From Noise	28
	6.3.4 Indirect Impacts From Public Access	29
	6.3.5 Indirect Impacts From Invasive Plant Species	29
	6.3.6 Indirect Impacts From Fugitive Dust	30
	6.3.7 Indirect Impacts To Nesting Birds	31
	6.4 Conflicts with Plans and Policies	31
	6.4.1 Wetland Buffers	32
	6.4.2 Multiple Species Conservation Program Consistency	32
	6.5 Cumulative Impacts	37
7.0	MITIGATION PROGRAM	41
	7.1 Mitigation Element	41
	7.1.1 Mitigation for Direct Impacts to Sensitive Vegetation Communities	41
	7.1.2 Mitigation for Indirect Impacts to Cooper's Hawk	43
	7.2 Protection and Notice Element	44
	7.3 Management Element	45
8.0	ACKNOWLEDGEMENTS	46
9.0	REFERENCES	47

TABLE OF CONTENTS (cont.)

LIST OF APPENDICES

A Declaration of Restrictions
B Plant Species Observed
C Explanation of Status Codes for Plant and Wildlife Species
D Sensitive Plant Species Not Observed but with Potential to Occur
E Animal Species Observed
F Sensitive Animal Species Not Observed but with Potential to Occur

LIST OF FIGURES

No.	Title	Follows Page
1	Regional Location Map	2
2	Project Vicinity Map (USGS Topography)	2
3	New Proposed Projects #s 17-30	2
4	Vegetation and Sensitive Resources/Impacts	6
5	MHPA Boundary Line Corrections	22

LIST OF TABLES

No.	Title	Page
1	Existing Acreages of Vegetation Communities/Land Cover Types	7
2	Sensitive Vegetation Communities	12
3	Impacts to Vegetation Communities/Land Cover Types	25
4	Cumulative Impacts of the Proposed Master Plan's 30 Projects to Sensitive Biological Resources	39

THIS PAGE INTENTIONALLY LEFT BLANK

1.0 INTRODUCTION

1.1 PURPOSE OF THE REPORT

The purpose of this biological technical report is to describe: (1) existing biological conditions within the proposed Master Plan Update (MPU) boundary on the University of San Diego (USD) campus; (2) the overall impacts to biological resources from development of 14 newly-proposed projects on campus under the proposed update to the 1996 Master Plan (MW Steele 2015); and (3) mitigation measures to compensate for impacts that would be significant. This report also explains how the following regulatory act(s)/plan(s) apply to the proposed MPU: federal and State Endangered Species Acts; federal Migratory Bird Treaty Act (MBTA); federal Clean Water Act; California Fish and Game Code; California Environmental Quality Act (CEQA); and City of San Diego's (City's) Multiple Species Conservation Program (MSCP) Subarea Plan, Land Development Code, and Environmentally Sensitive Lands (ESL) Regulations.

1.2 PROJECT LOCATION

The land within the proposed MPU boundary includes approximately 180 acres devoted to university-related uses in the central portion of the City, in the community of Linda Vista. USD is located four miles north of downtown San Diego, approximately 0.5 mile east of Interstate 5 and 0.5 mile north of Interstate 8 (Figure 1). It is within an unsectioned area of Township 16 South, Range 3 West, on the U.S. Geological Survey 7.5-minute La Jolla quadrangle map (Figure 2). Tecolote Canyon Natural Park forms the northern border of the proposed MPU boundary; Morena Boulevard is located to the west, with Via Las Cumbres on the east, and Linda Vista Road to the south.

1.3 PROJECT BACKGROUND AND DESCRIPTION

In 1996, USD received approval of its existing Master Plan to guide the phased buildout of the campus through the year 2030. The City issued Conditional Use Permit (CUP)/Resource Protection Ordinance (RPO) Permit No. 92-0568 to allow USD to construct 23 conceptual projects and expand the population to 7,000 full-time equivalent (FTE) students. Two future study areas were also identified in the Master Plan. The sequence of the projects was not determined at that time in order to provide flexibility with regard to economics and academic needs. The 1996 Master Plan Final Environmental Impact Report (FEIR; City 1996) was prepared to assess the short- and long-term, as well as cumulative, impacts of implementing the Master Plan and was certified in conjunction with the CUP approvals.

Various projects have been constructed on campus under the 1996 Master Plan, in accordance with CUP/RPO Permit No. 92-0568. Two of those projects have resulted in impacts to biological resources which required mitigation as specified in the 1996 Master Plan FEIR. Those projects include: 1) the Lower West Parking Structure (LDR 41-0092, RPO 92-0568) and 2) The School of Education (Project 6242, SCH No. 93121032). The Lower West Parking Structure impacted 1.53 acres of maritime succulent scrub and 0.36 acre of non-native grassland. The impacts were mitigated by purchasing 1.69 acre of maritime succulent scrub and 0.02 acre of non-native grassland at the Wruck Canyon Mitigation Bank. The School of Education impacted 0.004 acre

of coastal sage scrub. The impact was mitigated by paying $1,000 into the City's Habitat Acquisition Fund (HAF). A third project, the Wellness Recreation Center/Golf Practice Range/Softball Facility (Project 140201, SCH No. 2008101161), was reviewed and permitted by the City as CUP 489856 but has not yet pursued grading permits. Proposed impacts for that project include 0.1 acre of eucalyptus woodland and 4.8 acres of developed land for which no mitigation is required; a 0.3 acre boundary line correction was processed with that approval.

Because the Master Plan is a document that records the vision and goals of the physical campus, that vision for the campus is updated from time-to-time to reflect the changes in demographics and the economy that affect higher education. Most importantly, the Master Plan is required by the City as the basis for the University's CUP and to ensure the University's fulfillment of current regulations. Over the last several years, USD campus officials have been conducting vision planning and space planning exercises to address the future needs of the university. An update to the existing Master Plan is now proposed.

The proposed USD MPU provides a comprehensive revision of the 1996 Master Plan and Design Guidelines, as well as the campus' building space and infrastructure needs associated with increasing enrollment from 7,000 FTE students to 10,000 FTE students over the next 20+ years. The proposed USD MPU project would to allow for the development of academic core/student service/support uses and athletics, recreation uses, and additional student housing. Parking supply expansions would also occur under the proposed MPU.

Among the projects outlined in the proposed MPU are 14 newly-proposed proposed projects (Figure 3 [projects numbered 17 through 30]), as well as 16 approved projects (projects numbered 1 through 16 but not shown on Figure 3) identified in the 1996 Master Plan EIR that have previous City review/approvals but remain unbuilt. The 14 proposed project sites would allow for the construction of academic/administrative buildings, student housing, student services uses, athletics/athletic support/administrative buildings, parking, pedestrian circulation, and landscape improvements not contemplated in the 1996 Master Plan and related EIR. The 14 proposed projects (Projects 17 through 30) are listed below.

17. Lower Olin Future Study Area; Proposed Trails/Landscape Enhancements
18. Parking/Administrative
19. Plaza/Mall/Bridge
20. Academic/Administrative/Support
21. Academic/Administrative/Student Services Building
22. Academic/Administrative Building
23. Housing/Parking Structure
24. Housing/ Student Services/Parking
25. Proposed Academic/Administrative /Parking Building
26. Engineering Expansion of Loma Hall; Proposed Academic/Administrative Building
27. Housing/Student Services
28. Athletics/Administrative Building
29. Facilities/Athletics Support
30. Student Housing/Student Services/Parking/Athletics

Regional Location Map

UNIVERSITY OF SAN DIEGO MASTER PLAN UPDATE

HELIX Environmental Planning

N 0 8 Miles

Figure 1

I:\PROJECTS\M\MWS\MWS-01_USD\Map\BTR\Fig1_Regional.mxd MWS-01 06/16/15 -CL

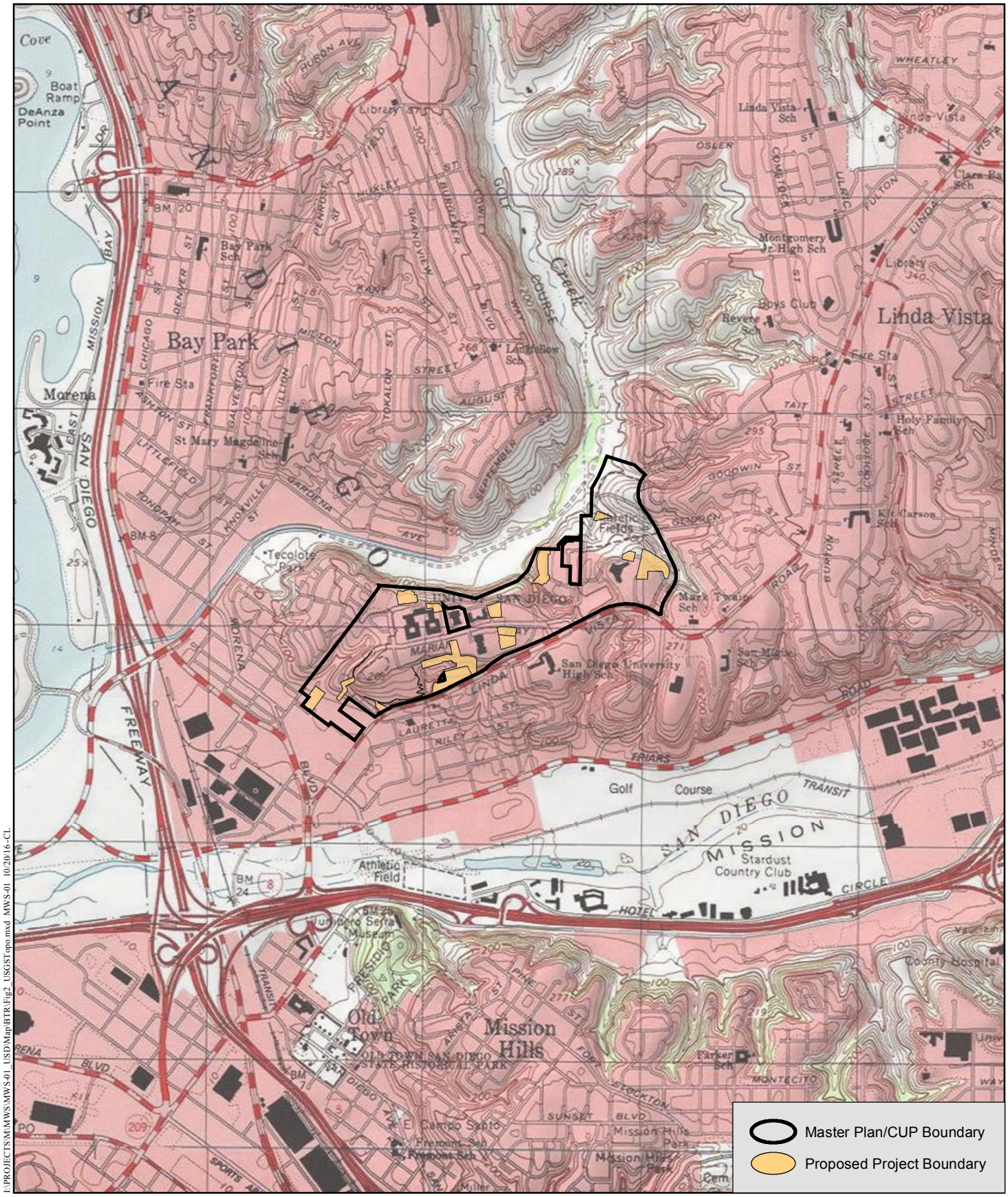

L:\PROJECTS\M\MWS\MWS-01_USD\Map\BTR\Fig2_USGSTopo.mxd MWS-01 10/20/16-CL

Project Vicinity (USGS Topography)

UNIVERSITY OF SAN DIEGO MASTER PLAN UPDATE

HELIX Environmental Planning

N 0 2,000 Feet

Figure 2

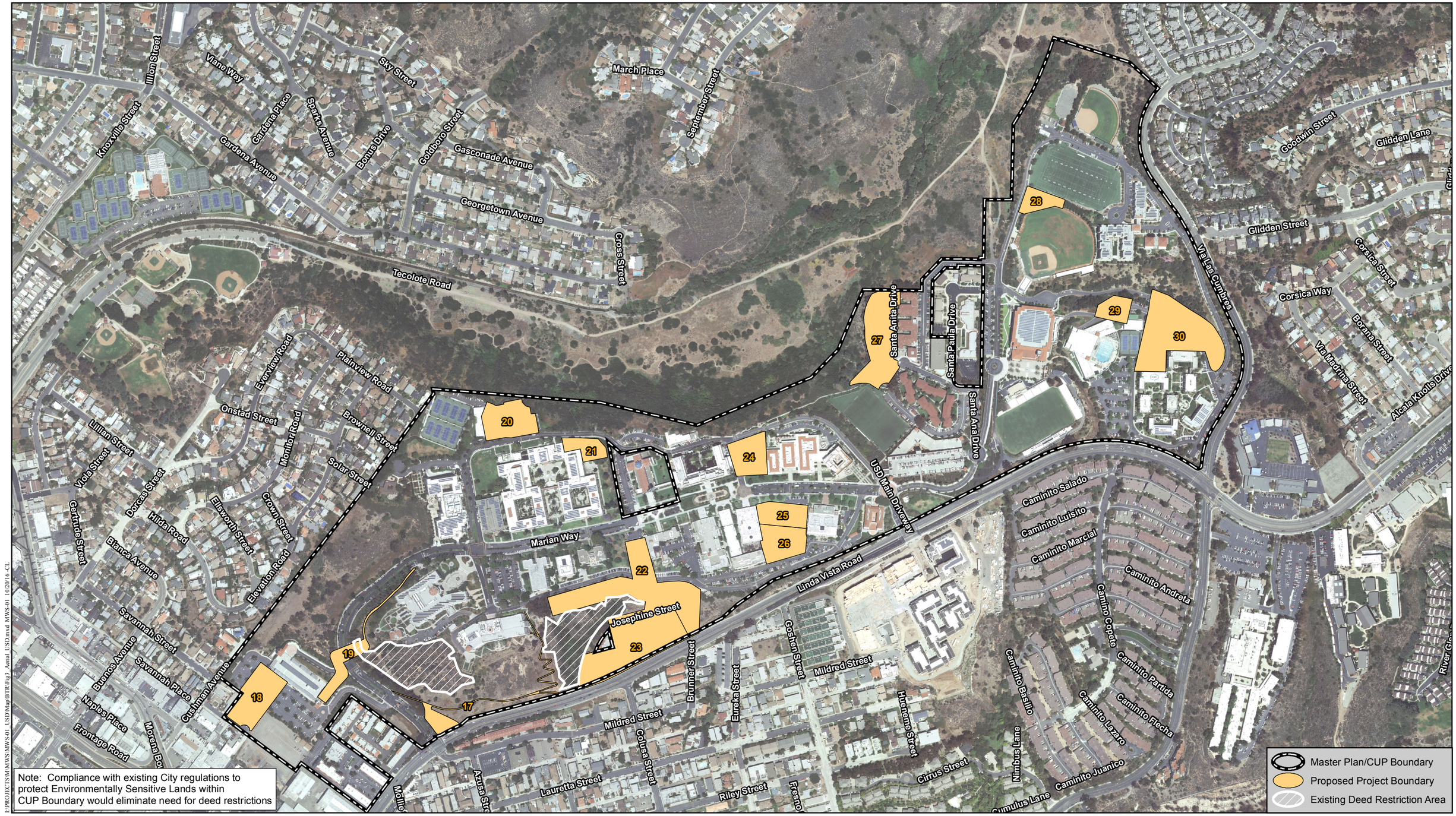

New Proposed Projects #s 17-30

UNIVERSITY OF SAN DIEGO MASTER PLAN UPDATE

HELIX Environmental Planning

0 500 Feet

Figure 3

Design guidelines contained in the MPU would provide a comprehensive design framework to guide campus development. Other elements of the proposed MPU address the planning context of the campus, provide an enrollment and space analysis, and identify sustainability goals.

The above-described improvements would require the following entitlements: an amended CUP to allow for the continued institutional use, a Site Development Permit to allow impacts to ESL, and a Multi-habitat Planning Area (MHPA) Boundary Line Correction to shift already developed land out of the MHPA, which is the City's MSCP preserve.

This report only analyzes the 14 proposed projects (except for cumulative impacts) contained in the MPU since the other 16 projects have already been analyzed and approved by the City under the 1996 Master Plan.

2.0 SURVEY METHODS

2.1 LITERATURE REVIEW

Prior to conducting field investigations, HELIX Environmental Planning, Inc. (HELIX) performed a review of existing literature and databases including:

- California Natural Diversity Database (CNDDB)
- California Native Plant Society's (CNPS) Rare and Endangered Plant Inventory
- U.S. Fish and Wildlife Service (USFWS) species database
- City's MSCP Subarea Plan (City 1997a)
- Biological Resources Report for the USD Master Plan Environmental Impact Report (Lettieri-McIntyre and Associates, Inc. 1996)
- Rare Plants of San Diego County (Reiser 2001)
- San Diego County Bird Atlas (Unitt 2004)
- Soil Survey Geographic Database (U.S. Department of Agriculture Natural Resources Conservation Service [USDA NRCS] 2015).

2.2 GENERAL BIOLOGICAL SURVEY

On August 15, 2014, HELIX Principal Biologist W. Larry Sward conducted vegetation community/land cover type mapping and a general biological survey for the proposed MPU. Vegetation communities/land cover types were mapped on an aerial photograph (1"=100' scale). A list of plant and animal species observed or detected during the survey was prepared. Plant species were identified in the field or later in the laboratory with the aid of botanical keys. Animals were identified in the field by direct visual observation with the aid of binoculars or indirectly by detection of calls, tracks, burrows, or scat. During the survey, Mr. Sward conducted an assessment of waters/wetlands that could be under the jurisdiction of the U.S. Army Corps of Engineers (USACE), California Department of Fish and Wildlife (CDFW), and/or City.

2.3 JURISDICTIONAL DELINEATION

While some potential jurisdictional waters/wetlands were observed within the proposed MPU boundary, none occur within proposed impact areas, so a formal jurisdictional delineation was not conducted.

2.4 SENSITIVE PLANT SURVEY

A sensitive plant survey was conducted by Mr. Sward on May 22, 2015, which is during the period when most annual plant species are blooming. The survey was conducted by walking slowly through the vegetation communities and looking for sensitive plants. The focus of the survey was in impact areas that encompassed the 14 proposed projects.

2.5 SURVEY LIMITATIONS

While 2015 was a drought year, the only sensitive plant species not found were those with low or no potential to occur. Therefore, it is believed that the drought conditions did not significantly affect the sensitive plant species survey results.

Noted animal species were identified by direct observation, vocalizations, or the observance of scat, tracks, or other signs. However, the animal species observed or detected do not necessarily represent a comprehensive account of all species that utilize the habitats within the proposed MPU boundary because species that are nocturnal, secretive, or seasonally restricted may not have been observed/detected. Those species that are sensitive and have potential to occur based on the literature review are addressed in this report in Sections 3.2.1.4, *Sensitive Plant Species*, and 3.2.2.1, *Sensitive Animal Species*.

2.6 NOMENCLATURE

Nomenclature used in this report follows the conventions used in the City's Biology Guidelines (City 2012) and the City's MSCP Subarea Plan (City 1997a). Vegetation community classifications follow Holland (1986), Oberbauer et al. (2008), and the City's Biology Guidelines City (2012); plant names follow Baldwin et al. (2012) or Rebman and Simpson (2006). Animal nomenclature is taken from American Ornithologists' Union (2015) for birds, Baker et al. (2003) for mammals, and Collins and Taggart (2009) for reptiles and amphibians. Sensitive plant species status follows the California Native Plant Society (CNPS; 2015), and sensitive animal species status follows CDFW (2015).

3.0 SURVEY RESULTS

3.1 PHYSICAL CHARACTERISTICS

This section describes the physical characteristics of the land within the proposed MPU boundary including topography, soils, land uses, and potential jurisdictional waters/wetlands.

3.1.1 Topography and Soils

The topography within the proposed MPU boundary is characterized by sloping hillsides and shallow ravines on the northern, southern, and western boundaries. Existing buildings are located on leveled terraces. Elevations within the proposed MPU boundary range from approximately 50 feet above mean sea level (AMSL) to approximately 260 feet AMSL. Eight soil types are present: Carlsbad-Urban land complex, Gaviota fine sandy loam, Huerhero loam, Huerhuero-Urban land complex, Olivenhain-Urban land complex, Redding-Urban land complex, Reiff fine sandy loam, and terrace escarpments (USDA NRCS 2015). Soils in the undeveloped areas of the proposed MPU are as follows: Reiff fine sandy loam and Huerhuero loam in the northeastern area; terrace escarpments in the north-central area; and Huerhuero-Urban land complex in the western area.

3.1.2 Land Uses

With the exception of the steep, north-facing slopes along the northern proposed MPU boundary and the slopes on the western end of the proposed MPU area near Marian Way, the majority of the proposed MPU area is developed and supports university facilities (buildings, parking lots, athletic fields, etc.) and associated landscaping.

Land uses surrounding USD include commercial/industrial development and residential housing in the Morena Boulevard area to the west, student and non-student multi-family housing immediately to the south, and various types of residential development to the east. Tecolote Canyon Natural Park contains undeveloped regional open space to the north. The MHPA occurs on approximately 7.6 acres along the northern edge of the proposed MPU boundary and extends off site into Tecolote Canyon.

There are two areas in the western portion of the proposed MPU area (one approximately 2.6-acre area and one approximately 2.3-acre area) that were deed-restricted to protect sensitive biological resources as a condition of approval of the 1996 CUP/RPO Permit (Figure 3; Appendix A). These areas were established by the City as part of the 1996 Master Plan approvals but were not set aside as mitigation for any impacts to biological resources. According to the Declaration of Restrictions (City 1997b), CUP/RPO Permit No. 92-0568 can be amended to change the allowable uses in these areas.

3.1.3 Potential Jurisdictional Waters/Wetlands

Potential waters/wetlands occur in undeveloped areas in the far northeastern corner of the proposed MPU area and in the western portion of the proposed MPU area and include southern willow scrub, southern willow scrub-disturbed, Arundo dominated riparian, and non-wetland streambed (Figure 4). All or some of each of these would likely be regarded as waters of the United States (WUS), waters of the State (WS), and/or City wetlands because 1953 aerial photography (Nationwide Environmental Title Research, LLC 2016) shows these three drainages as being present just after USD opened its doors in 1952. These drainages were not created during University construction; they are naturally occurring features.

3.1.3.1 Federal Jurisdiction

USACE jurisdictional wetland boundaries are determined using three criteria (vegetation, hydrology, and soils) established for wetland delineations, as described in the Wetlands Delineation Manual (Environmental Laboratory 1987) and Regional Supplement to the Corps of Engineers Wetland Delineation Manual: Arid West Region (Arid West Supplement; USACE 2008). A site must meet all three wetland criteria to be considered wetland. Non-wetland WUS typically consist of intermittent or ephemeral streams where all three wetland criteria are not met. While no formal delineation of federal jurisdiction was conducted, it is possible that the mapped southern willow scrub, southern willow scrub-disturbed, and Arundo dominated riparian are all wetlands and that the streambed is non-wetland waters under the jurisdiction of the USACE.

3.1.3.2 State Jurisdiction

CDFW jurisdictional boundaries are determined based on the presence of riparian vegetation or regular surface flow. Streambeds within CDFW jurisdiction are delineated based on the definition of streambed as "a body of water that flows at least periodically or intermittently through a bed or channel having banks and supporting fish or other aquatic life. This includes watercourses having a surface or subsurface flow that supports riparian vegetation" (Title 14, Section 1.72). This definition for CDFW jurisdictional habitat allows for a wide variety of habitat types to be jurisdictional, including some that do not include wetland species (e.g., oak woodland). Jurisdictional limits for CDFW streambeds are defined by the top of bank. While no formal delineation of State jurisdiction was conducted, it is likely that the mapped southern willow scrub, southern willow scrub-disturbed, and Arundo dominated riparian are all wetlands and that the streambed is non-wetland waters under the jurisdiction of the CDFW.

3.1.3.3 City Jurisdiction

The City's Land Development Code (§113.0101) defines wetlands as areas that are characterized by any of the following conditions:

1. All areas persistently or periodically containing naturally occurring wetland vegetation communities characteristically dominated by hydrophytic vegetation, including but not limited to, salt marsh, brackish marsh, freshwater marsh, riparian forest, oak riparian forest, riparian woodlands, riparian scrub (RS), and vernal pools;

2. Areas that have hydric soils or wetland hydrology and lack naturally occurring wetland vegetation communities because human activities have removed the historic wetland vegetation, or catastrophic or recurring natural events or processes have acted to preclude the establishment of wetland vegetation, as in the case of salt pannes and mudflats;

3. Areas lacking wetland vegetation communities, hydric soils, and wetland hydrology due to non-permitted filling of previously existing wetlands;

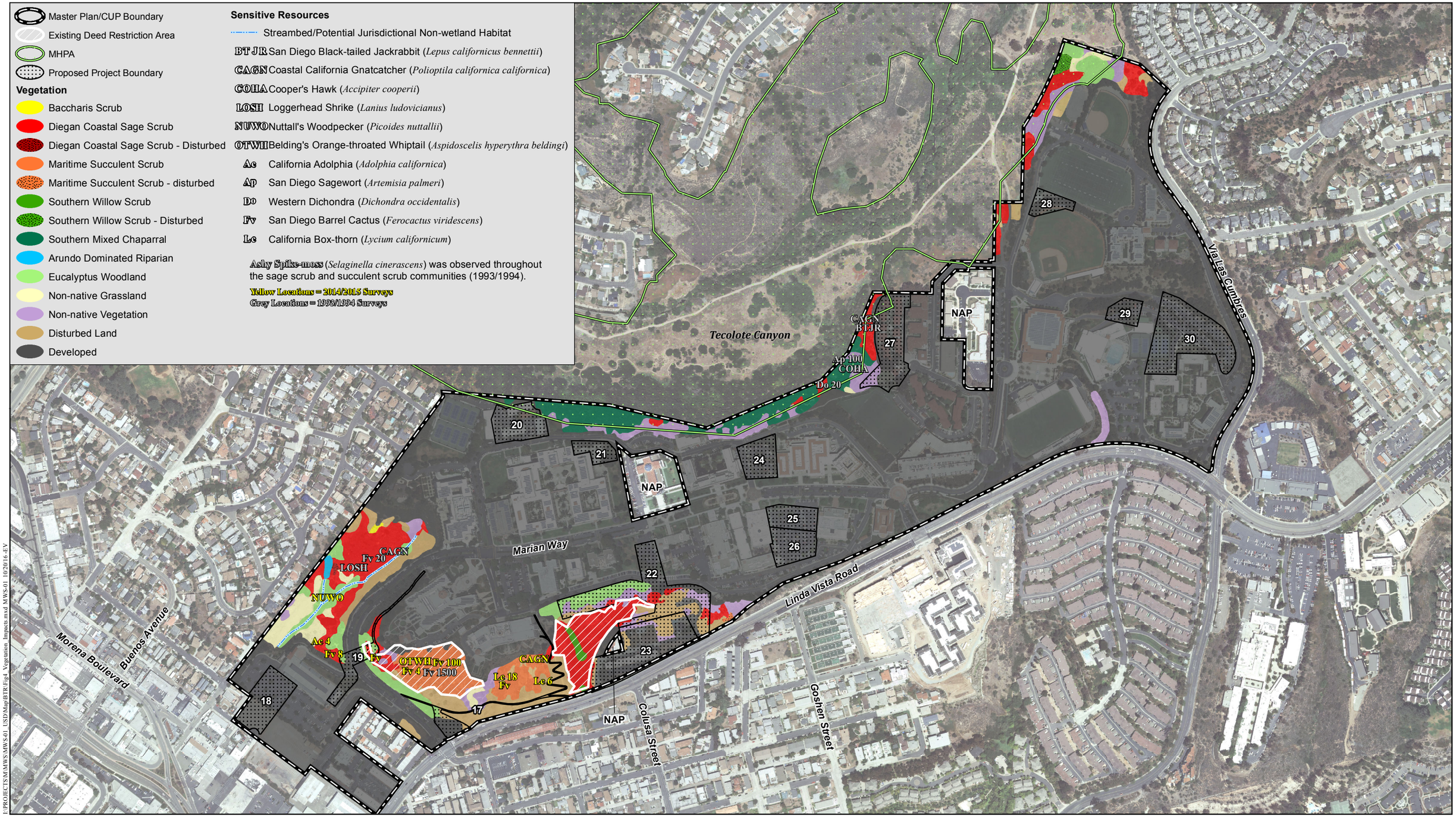

Vegetation and Sensitive Resources/Impacts

UNIVERSITY OF SAN DIEGO MASTER PLAN UPDATE

HELIX Environmental Planning

Figure 4

I:\PROJECTS\M\MWS\MWS-01_USD\Map\BTR\Fig4_Vegetation_Impacts.mxd MWS-01 10/2016 -EV

4. Areas mapped as wetlands on Map No. C-713 as shown in Chapter 13, Article 2, Division 6 (Sensitive Coastal Overlay Zone).

It is intended for this definition to differentiate, for the purposes of delineating wetlands, naturally occurring wetlands and wetlands intentionally created by human actions from areas with wetlands characteristics unintentionally resulting from human activities in historically non-wetland areas. With the exception of wetlands created for the purpose of providing wetland habitat, or resulting from human actions to create open waters, or from the alteration of natural stream courses, areas demonstrating wetland characteristics, which are artificially created, are not considered wetlands by this definition. Taking into account regional precipitation cycles, all adopted scientific, regulatory, and technological information available from State and federal wildlife agencies shall be used for guidance on the identification of hydrophytic vegetation, hydric soils, and wetland hydrology.

Based on the City's definition of a wetland, it is likely that the mapped southern willow scrub, southern willow-scrub, and Arundo dominated riparian are all City wetlands.

3.2 BIOLOGICAL RESOURCES

This section describes the biological resources within the proposed MPU boundary including vegetation communities/land cover types, general flora and fauna, and sensitive vegetation and species. It also addresses sensitive species not observed but with potential to occur based on the literature review (see Section 2.1).

3.2.1 Botanical Resources

3.2.1.1 Vegetation Communities/Land Cover Types

Thirteen vegetation communities and one land cover type (developed) are present (Figure 4). Each is listed in Table 1 with its acreage on campus and is described following Table 1.

Table 1
EXISTING ACREAGES OF VEGETATION COMMUNITIES/ LAND COVER TYPES

VEGETATION COMMUNITY/ LAND COVER TYPE[1]	ACRES[2]	ACRES IN THE MHPA[2]
Wetland/Riparian		
Southern willow scrub (63320)	0.21	--
Southern willow scrub–disturbed (63320)	0.20	0.20
Arundo dominated riparian (65100)	0.12	--

Table 1 (cont.) **EXISTING ACREAGES OF VEGETATION COMMUNITIES/ LAND COVER TYPES**		
VEGETATION COMMUNITY/ LAND COVER TYPE[1]	**ACRES[2]**	**ACRES IN THE MHPA[2]**
Upland		
Maritime succulent scrub (32400)	3.2	--
Maritime succulent scrub–disturbed (32400)	<0.1 (0.03)	--
Diegan coastal sage scrub (32500)	8.4	1.2
Diegan coastal sage scrub–disturbed (32500)	<0.1 (0.04)	--
Baccharis scrub (32530)	0.1	--
Southern mixed chaparral (37121)	3.6	3.1
Non-native grassland (42200)	1.6	0.2
Eucalyptus woodland (79100)	3.8	0.6
Disturbed land (11300)	5.9	0.2
Non-native vegetation (11000)	4.8	1.4
Developed (12000)	145.9	0.7
TOTAL	**180.0**	**7.6**

[1] Vegetation community codes are from Oberbauer et al. 2008 except disturbed land, which is from the City's Biology Guidelines (City 2012).

[2] Wetland/riparian community acreages rounded to the nearest 0.01 acre; upland community acreages rounded to the nearest 0.1 acre. Total acreage reflects rounding.

Southern Willow Scrub (including –disturbed)

Southern willow scrub generally consists of dense, broadleaved, winter-deciduous stands of trees dominated by shrubby willows (*Salix* spp.) in association with mule fat (*Baccharis salicifolia*) and, if the riparian system is large enough, with scattered emergent cottonwood (*Populus fremontii*) and western sycamores. Within the proposed MPU area, this vegetation community appears as a single layer; it lacks separate shrub and tree layers and generally appears as a mass of short trees or large shrubs.

Three patches of southern willow scrub occur on within the proposed MPU area. Two patches occur near Linda Vista Road in a drainage that likely receives urban runoff from the campus. These patches are dominated by arroyo willow (*Salix lasiolepis*). Another patch (southern willow scrub–disturbed) is in the northeastern corner of the proposed MPU area. This patch consists of a mix of arroyo willow and Brazilian pepper tree (*Schinus terebinthifolius*).

Arundo Dominated Riparian

Arundo-dominated riparian is a thicket of dense vegetation composed almost exclusively of invasive, non-native giant reed (*Arundo donax*). This community usually occurs in loose, sandy, or fine gravelly alluvium along the major rivers of coastal southern California; however, a single patch of this non-native community occurs in a small drainage in the western portion of the proposed MPU area west of Marian Way.

Maritime Succulent Scrub (including –disturbed)

Maritime succulent scrub is a low-growing, open scrub community that is dominated by a mixture of stem and leaf succulent species and drought deciduous species that also occur within sage scrub communities. This vegetation community occurs on thin, rocky, or sandy soils on steep slopes of coastal headlands and bluffs. Maritime succulent scrub is restricted to within a few miles of the coast from about Torrey Pines to Baja California, Mexico and on San Clemente and Catalina islands. The dominant species typically found within this vegetation community include San Diego barrel cactus (*Ferocactus viridescens*), velvet cactus (*Bergerocactus emoryi*), coastal prickly pear (*Opuntia littoralis*), cliff spurge (*Euphorbia misera*), dudleya (*Dudleya* spp.), California box-thorn (*Lycium californicum*), and California encelia (*Encelia californica*; Beauchamp 1986).

Maritime succulent scrub within the proposed MPU area is co-dominated by jojoba (*Simmondsia chinensis*), California buckwheat (*Eriogonum fasciculatum*), and California sagebrush (*Artemisia californica*) with a variety of succulents including coastal prickly pear, San Diego barrel cactus, ladies-fingers (*Dudleya edulis*), and coastal cholla (*Cylindropuntia prolifera*). Maritime succulent scrub is located in the western portion of the proposed MPU area, east of Marian Way.

Maritime succulent scrub-disturbed contains many of the same shrub species as the undisturbed community but is sparser and has a higher proportion of non-native, annual plant species. A small patch of maritime succulent scrub-disturbed is located in the western portion of the proposed MPU area northeast of the intersection of Linda Vista Road and Colusa Street.

Diegan Coastal Sage Scrub (including –disturbed)

Coastal sage scrub is one of the two major shrub types that occur in southern California, occupying xeric sites characterized by shallow soils (the other is chaparral). Four distinct coastal sage scrub geographical associations (northern, central, Venturan, and Diegan) are recognized along the California coast. Diegan coastal sage scrub may be dominated by a variety of species depending upon soil type, slope, and aspect. Typical species found within the Diegan association include California sagebrush, California buckwheat, laurel sumac (*Malosma laurina)*, and black sage (*Salvia mellifera*).

Diegan coastal sage scrub occurs in scattered locations throughout the undeveloped portions of the proposed MPU area. It is generally dominated by California buckwheat, California sagebrush, and large, evergreen shrubs such as laurel sumac and lemonadeberry (*Rhus integrifolia*).

Diegan coastal sage scrub-disturbed contains many of the same shrub species as the undisturbed community but is sparser and has a higher proportion of non-native, annual plant species. A small patch of Diegan coastal sage scrub-disturbed is located in the western portion of the proposed MPU area (immediately east of Arundo dominated riparian).

Baccharis Scrub

Baccharis scrub is similar to Diegan coastal sage scrub but dominated by *Baccharis* species (*Baccharis sarothroides* and/or *B. pilularis*). It often occurs within Diegan coastal sage scrub on disturbed sites and areas with nutrient-poor soils and on upper terraces of streams and in detention basins where it includes goldenbush. (*Isocoma* spp.). Baccharis scrub is confined to a small mesa in the western part of the proposed MPU area. The vegetation is dominated by an open cover of broom baccharis (*B. sarothroides*) with a poorly developed herbaceous layer.

Southern Mixed Chaparral

Southern mixed chaparral is composed of broad-leaved sclerophyllous shrubs that can reach 6 to 10 feet in height and form dense, often nearly impenetrable stands with poorly developed understories. In this mixed chaparral, the shrubs are generally deep rooted with a well-developed soil litter layer, high canopy coverage, low light levels within the canopy, and lower soil temperatures (Keeley and Keeley 1988). This vegetation community occurs on dry, rocky, often steep north-facing slopes with little soil. As conditions become more mesic, broad-leaved sclerophyllous shrubs that resprout from underground root crowns become dominant.

Southern mixed chaparral occurs within the proposed MPU area on the steep north-facing slopes overlooking Tecolote Canyon. Typical species in this community include toyon (*Heteromeles arbutifolia*), lemonadeberry, and poison-oak (*Toxicodendron diversilobum*).

Non-native Grassland

Non-native grassland is a dense to sparse cover of annual grasses sometimes associated with species of showy-flowered, native, annual forbs. This association often occurs on gradual slopes with deep, fine-textured, usually clay soils. Characteristic species include oats (*Avena* spp.), red brome (*Bromus madritensis* ssp. *rubens*), common ripgut grass (*B. diandrus*), ryegrass (*Festuca* sp.), and mustard (*Brassica* sp.). Most of the annual, introduced species that comprise the majority of species and biomass within non-native grassland originated from the Mediterranean region, an area with a long history of agriculture and a climate similar to California. These two factors, in addition to intensive grazing and agricultural practices in conjunction with severe droughts, contributed to the successful invasion and establishment of these species and the replacement of native communities with an annual dominated, non-native grassland (Jackson 1985). Non-native grassland within the proposed MPU area is dominated by red brome and common ripgut grass. Non-native grassland occurs in four locations: one in the northeast, one in the north-central, and two in the west.

Eucalyptus Woodland

Eucalyptus woodland is dominated by eucalyptus (*Eucalyptus* sp.), an introduced genus that has often been planted purposely for wind blocking, ornamental, and hardwood production purposes. Most groves are monotypic, with the most common species being either the blue gum (*Eucalyptus globulus*) or river red gum (*E. camaldulensis*). The understory within well-established groves is usually very sparse due to the closed canopy and allelopathic nature of

the abundant leaf and bark litter. If sufficient moisture is available, this species becomes naturalized and is able to reproduce and expand its range. Eucalyptus woodland occurs in the western and northeastern parts of the proposed MPU area.

Non-native Vegetation

Non-native vegetation is a category describing stands of naturalized shrubs and trees (e.g., acacia [*Acacia* spp.] and pepper tree [*Schinus* spp.]), many of which are also used in landscaping. Within the proposed MPU area, patches of hottentot-fig (*Carpobrotus edulis*) comprise most of the non-native vegetation, and it occurs primarily adjacent to buildings and along the edge of the upper slope of Tecolote Canyon.

Disturbed Land

Disturbed land includes land cleared of vegetation (e.g., dirt roads), land containing a preponderance of non-native plant species such as ornamentals or ruderal, exotic species that take advantage of disturbance (previously cleared or abandoned landscaping), or land showing signs of past or present animal usage that removes its ability to provide viable habitat.

Disturbed land within the proposed MPU area consists of bare ground in some areas, and in others is dominated by non-native, ruderal forbs including garland daisy (*Glebionis coronaria*) and poison hemlock (*Conium maculatum*). The largest areas of disturbed land are in the western portion of the proposed MPU area.

Developed

Developed land is where permanent structures and/or pavement have been placed, which prevents the growth of vegetation, or where landscaping is clearly tended and maintained. Most of the proposed MPU area is developed.

3.2.1.2 Sensitive Vegetation Communities

According to San Diego Municipal Code (SDMC; Chapter 11, Article 3, Division 1) and the City's Biology Guidelines (City 2012), sensitive biological resources refer to upland and/or wetland areas that meet any one of the following criteria:

(a) Lands that have been included in the City's MSCP Preserve (i.e., the MHPA);

(b) Wetlands;[1]

(c) Lands outside the MHPA that contain Tier I, Tier II, Tier IIIA, or Tier IIIB habitats;

[1] The definition of a City Wetland can be found in Section 3.1.3.3, *City Jurisdiction*.

(d) Lands supporting species or subspecies listed as rare, endangered, or threatened under Section 670.2 or 670.5, Title 14, California Code of Regulations, or the federal Endangered Species Act, Title 50, Code of Federal Regulations, Section 17.11 or 17.12, or candidate species under the California Code of Regulations;

(e) Lands containing habitats with MSCP Narrow Endemic species as listed in the Biology Guidelines (City 2012); or

(f) Lands containing habitats of MSCP Covered Species as listed in the Biology Guidelines (City 2012).

Additionally, sensitive vegetation communities are those considered rare within the region or sensitive by CDFW (Holland 1986) and/or the City. These communities, in any form (e.g., including disturbed), are considered sensitive because they have been historically depleted, are naturally uncommon, or support sensitive species.

As explained below in Section 4.3.2, *Environmentally Sensitive Lands Regulations*, upland vegetation communities are divided into tiers of sensitivity based on rarity and ecological importance (City 2012). Tiers I through IIIB are assigned to sensitive communities.

The sensitive vegetation communities within the proposed MPU area are presented in Table 2. Eucalyptus woodland and disturbed land are Tier IV communities, and non-native vegetation is not assigned a tier. None of these three communities is sensitive.

Table 2
SENSITIVE VEGETATION COMMUNITIES

VEGETATION COMMUNITY	TIER	ACRES[1]	ACRES IN THE MHPA[1]
Wetland/Riparian			
Southern willow scrub	--	0.21	--
Southern willow scrub–disturbed	--	0.20	0.2
Arundo dominated riparian	--	0.12	--
Subtotal Wetland/Riparian	**--**	**0.53**	**0.2**
Upland			
Maritime succulent scrub	I	3.2	--
Maritime succulent scrub–disturbed	I	<0.1 (0.03)	--
Diegan coastal sage scrub	II	8.4	1.2
Diegan coastal sage scrub–disturbed	II	<0.1 (0.04)	--
Baccharis scrub	II	0.1	--
Southern mixed chaparral	IIIA	3.6	3.2
Non-native grassland	IIIB	1.6	0.2
Subtotal Upland	**--**	**17.0**	**4.6**
TOTAL	**--**	**17.5**	**4.8**

[1] Wetland/riparian community acreages rounded to the nearest 0.01 acre; upland community acreages rounded to the nearest 0.1 acre. Totals reflect rounding.

3.2.1.3 Plant Species

A total of 72 plant species was observed during the biological surveys in 2014/2015. Thirty-one of these species are non-native (Appendix B).

3.2.1.4 Sensitive Plant Species

Sensitive plant species are those that are considered federal, State, or CNPS rare, threatened, or endangered; MSCP Covered Species; or MSCP Narrow Endemic species (Appendix C). More specifically, if a species is designated with any of the following statuses (a-c below), it is considered sensitive per SDMC (Chapter 11, Article 3, Division 1):

(a) A species or subspecies is listed as rare, endangered, or threatened under Section 670.2 or 670.5, Title 14, California Code of Regulations, or the federal Endangered Species Act, Title 50, Code of Federal Regulations, Section 17.11 or 17.12, or candidate species under the California Code of Regulations;

(b) A species is a Narrow Endemic as listed in the Biology Guidelines in the Land Development Manual (City 2012); and/or

(c) A species is a Covered Species as listed in the Biology Guidelines in the Land Development Manual (City 2012).

A plant species may also be considered sensitive if it is included in the CNPS Inventory of Rare and Endangered Plants (CNPS 2015; Appendix C).

Sensitive plant status is often based on one or more of three distributional attributes: geographic range, habitat specificity, and/or population size. A species that exhibits a small or restricted geographic range (such as those endemic to the region) is geographically rare. A species may be more or less abundant but occur only in very specific habitats. Lastly, a species may be widespread but exists naturally in small populations.

There is no USFWS-designated critical habitat for federal listed plant species within the proposed MPU area.

Three plant species observed in 2014/2015 are sensitive: California adolphia (*Adolphia californica*), San Diego barrel cactus, and California box-thorn (*Lycium californicum*; Figure 4). Since the 2015 surveys did not cover the entire proposed MPU area, sensitive plant species that were mapped in 1993/1994 for the Biological Resources Report for the USD Master Plan Environmental Impact Report (Lettieri-McIntyre and Associates, Inc. 1996) in areas that are still not developed have been added to Figure 4 except for San Diego County viguiera (*Viguiera laciniata*), which HELIX determined is no longer present. The current statuses of the other plant species are undetermined. These species include San Diego sagewort (*Artemisia palmeri*), western dichondra (*Dichondra occidentalis*), and ashy spike-moss (*Selaginella cinerascens*). All of these species are addressed further below. Sensitive plant species not observed but with

potential to occur based on the literature review (see Section 2.1, including all City Narrow Endemic plant species) are addressed in Appendix D.

California adolphia (*Adolphia californica*)
Sensitivity: CNPS Rare Plant Rank 2B.1 (Appendix C)
Distribution: Western San Diego County and northwestern Baja California, Mexico.
Habitat(s): Clay soils in dry canyons and washes in coastal sage scrub and chaparral.
Observations: Approximately four California adolphia plants were observed in 2015 by HELIX in Diegan coastal sage scrub in the western portion of the proposed MPU area.

San Diego sagewort (*Artemisia palmeri*)
Sensitivity: CNPS Rare Plant Rank 4.2 (Appendix C)
Distribution: Coastal San Diego County; Baja California, Mexico.
Habitat(s): Stream courses, often within coastal sage scrub and southern mixed chaparral.
Observations: Approximately 100 individuals of San Diego sagewort were observed in 1993/1994 in an area that, at that time, supported disturbed southern willow riparian scrub (Lettieri-McIntyre and Associates, Inc. 1996) in the north-central portion of the proposed MPU area near Tecolote Canyon in the MHPA. That area now supports non-native vegetation, and San Diego sagewort was not noted there by HELIX during the surveys in 2014/2015.

Western dichondra (*Dichondra occidentalis*)
Sensitivity: CNPS Rare Plant Rank 4.2 (Appendix C)
Distribution: Santa Barbara County to Baja California, Mexico and on San Miguel Island.
Habitat(s): Dry, sandy banks in coastal sage scrub, chaparral, or southern oak woodland; often proliferates on recently burned slopes.
Observations: Twenty individuals of western dichondra were identified in 1993/1994 in a dense, north-facing patch of southern mixed chaparral in the MHPA (Lettieri-McIntyre and Associates, Inc. 1996). That location may have since been developed.

San Diego barrel cactus (*Ferocactus viridescens*)
Sensitivity: CNPS Rare Plant Rank 2B.1; MSCP Covered Species (Appendix C)
Distribution: San Diego County and Baja California, Mexico.
Habitat(s): Diegan coastal sage scrub hillsides, often at the crest of slopes and growing among cobbles. Occasionally found on vernal pool periphery and mima mound topography.
Observations: Approximately 2,245 individuals of San Diego barrel cactus were identified in 1993/1994 in the western portion of the proposed MPU area. HELIX noted more than 100 San Diego barrel cacti in some of these areas during its sensitive plant survey in 2014/2015, but since the focus of that survey was on proposed impact areas, not all potential habitat within the proposed MPU boundary was covered. An area that supported approximately 650 barrel cacti in 1993/1994 (Lettieri-McIntyre and Associates, Inc. 1996) has been developed as a parking garage off of Marian Way, and the impacted individuals were relocated to locations outside the MPU boundary.

California box-thorn (*Lycium californicum*)
Sensitivity: CNPS Rare Plant Rank 4.2 (Appendix C)
Distribution: In California, this species is found in Santa Barbara, Los Angeles, Orange, San Bernardino, and San Diego counties, as well as on a number of the Channel Islands.
Habitat(s): Coastal bluff scrub and coastal scrub.
Observations: Twenty-four individuals of California box-thorn were found in 2015 in two areas in maritime succulent scrub in the western part of the proposed MPU area.

Ashy spike-moss (*Selaginella cinerascens*)
Sensitivity: CNPS Rare Plant Rank 4.1 (Appendix C)
Distribution: Orange and San Diego counties to northwestern Baja California, Mexico.
Habitat(s): Flat mesas in coastal sage scrub and chaparral.
Observations: Lettieri-McIntyre and Associates, Inc. (1996) reports ashy spike-moss scattered diffusely throughout west-and south-facing slopes supporting Diegan coastal sage scrub and maritime succulent scrub. While HELIX did not observe this species in 2015 (its survey focused on impact areas), this species may still be present in locations that remain undeveloped.

San Diego County viguiera (*Viguiera laciniata*)
Sensitivity: CNPS Rare Plant Rank 4.2 (Appendix C)
Distribution: Orange and San Diego counties in California.
Habitat(s): Chaparral and coastal scrub in a variety of soil types.
Observations: Three populations totaling 350 individual plants were identified in Diegan coastal sage scrub and maritime succulent scrub in the western portion of the proposed MPU area in 1993/1994 (Lettieri-McIntyre and Associates, Inc. 1996). One of those populations (200 individuals) was impacted by development of a parking garage off of Marian Way. The other two populations were not observed by HELIX in 2014/2015. One is in an area still mapped as native scrub north of Linda Vista Way, east of Marian Way. The other, however, near the end of Camino de la Paz, may have been replaced with/displaced by non-native vegetation.

3.2.2 Zoological Resources

A total of 20 animal species (three reptile, 15 bird, and two mammal) were observed during the biological surveys in 2014/2015 (Appendix E).

3.2.2.1 Sensitive Animal Species

Sensitive animal species are those that are considered federal or State threatened or endangered; MSCP Covered Species; or MSCP Narrow Endemic species. More specifically, if a species is designated with any of the following statuses (a-c below), it is considered sensitive per SDMC (Chapter 11, Article 3, Division 1):

(a) A species or subspecies is listed as endangered or threatened under Section 670.2 or 670.5, Title 14, California Code of Regulations, or the federal Endangered Species Act, Title 50, Code of Federal Regulations, Section 17.11 or 17.12, or candidate species under the California Code of Regulations;

(b) A species is a Narrow Endemic as listed in the Biology Guidelines in the Land Development Manual (City 2012); and/or

(c) A species is a Covered Species as listed in the Biology Guidelines in the Land Development Manual (City 2012).

A species may also be considered sensitive if it is included on the CDFW's Special Animals List (CDFW 2015).

Generally, the principal reason an individual taxon (species or subspecies) is considered sensitive is the documented or perceived decline or limitations of its population size or geographical extent and/or distribution, resulting in most cases from habitat loss.

There is no USFWS-designated critical habitat for federal listed animal species within the proposed MPU area.

Three animal species observed in 2014/2015 are sensitive: Belding's orange-throated whiptail (*Aspidoscelis hyperythra beldingi*), Nuttall's woodpecker (*Picoides nuttallii*), and coastal California gnatcatcher (*Polioptila californica californica*; Figure 4). Since the 2015 surveys did not cover the entire proposed MPU area, sensitive animal species that were mapped in 1993/1994 for the Biological Resources Report for the USD Master Plan Environmental Impact Report (Lettieri-McIntyre and Associates, Inc. 1996) in areas that are still not developed today have been added to Figure 4. These species include Cooper's hawk (*Accipiter cooperii*), loggerhead shrike (*Lanius ludovicianus*), San Diego black-tailed jackrabbit (*Lepus californicus bennettii*), and additional locations for the coastal California gnatcatcher. All five species are addressed further below. Sensitive animal species not observed but with potential to occur are addressed in Appendix F.

<u>Belding's orange-throated whiptail (*Aspidoscelis hyperythra beldingi*)</u>
Sensitivity: State Species of Special Concern; MSCP Covered Species (Appendix C)
Distribution: Southern Orange and San Bernardino counties, south to the cape of Baja California, Mexico.
Habitat(s): Coastal sage scrub, chaparral, edges of riparian woodlands and washes. Also found in weedy, disturbed areas adjacent to these habitats. Important habitat requirements include open, sunny areas, shaded areas, and abundant invertebrate prey base, particularly termites (*Reticulitermes* sp.).
Observations: This whiptail was observed in 2014 by HELIX in maritime succulent scrub in the western portion of the proposed MPU area.

<u>Cooper's hawk (*Accipiter cooperii*)</u>
Sensitivity: State Watch List; MSCP Covered Species (Appendix C)
Distribution: Throughout the continental U.S. (excluding Alaska) and parts of both Montana and the Dakotas. Winters south to Mexico and Honduras.
Habitat(s): In San Diego County, tends to inhabit lowland riparian areas and oak woodlands in proximity to suitable foraging areas such as scrubland or fields.

Observations: One Cooper's hawk was observed in 1993/1994 perched in the north-central portion of the proposed MPU area near Tecolote Canyon in the MHPA (Lettieri-McIntyre and Associates 1996).

Loggerhead shrike (*Lanius ludovicianus*)
Sensitivity: Federal Bird of Conservation Concern; State Species of Special Concern (Appendix C)
Distribution: In San Diego County, the loggerhead shrike is an uncommon, year-round resident but absent from pinyon woodlands in higher elevations of the Santa Rosa and Vallecito mountains.
Habitat(s): Grassland, open sage scrub and chaparral, and desert scrub.
Observations: One loggerhead shrike was observed in 1993/1994 perched on a laurel sumac snag in the western portion of the proposed MPU area (Lettieri-McIntyre and Associates 1996).

Nuttall's woodpecker (*Picoides nuttallii*)
Sensitivity: Federal Bird of Conservation Concern (Appendix C)
Distribution: In San Diego County, the Nuttall's woodpecker inhabits nearly the entire coastal slope but is most concentrated in inland canyons and foothills with coast live oak (*Quercus agrifolia*).
Habitat(s): Riparian, oak, and coniferous woodlands.
Observations: The Nuttall's woodpecker was observed in 2014 by HELIX in eucalyptus woodland in the western portion of the proposed MPU area.

Coastal California gnatcatcher (*Polioptila californica californica*)
Sensitivity: Federal Listed Threatened; State Species of Special Concern; MSCP Covered Species (Appendix C)
Distribution: Southern Los Angeles, Orange, western Riverside, and San Diego counties south into Baja California, Mexico.
Habitat(s): Coastal sage scrub
Observations: The coastal California gnatcatcher was observed in 2014 by HELIX in the southwestern portion of the proposed MPU area in maritime succulent scrub/Diegan coastal sage scrub. The coastal California gnatcatcher was observed in 1993/1994 as one family group in the western portion of the proposed MPU area and one individual (likely a dispersing juvenile) in the north-central portion of the proposed MPU area near Tecolote Canyon in the MHPA (Lettieri-McIntyre and Associates 1996). It is assumed herein that all maritime succulent scrub and Diegan coastal sage scrub within the proposed MPU boundary is occupied by the gnatcatcher.

San Diego black-tailed jackrabbit (*Lepus californicus bennettii*)
Sensitivity: State Species of Special Concern (Appendix C)
Distribution: Southern Santa Barbara County, south on the coastal slope to the vicinity of San Quintin, Baja California, Mexico. Localities on the eastern edge of its range include Jacumba and San Felipe Valley in San Diego County.
Habitat(s): Occurs primarily in open habitats including coastal sage scrub, chaparral, grasslands, croplands and open, disturbed areas if there is at least some shrub cover present.

Observations: This jackrabbit was observed in 1993/1994 in the north-central portion of the proposed MPU area near Tecolote Canyon in the MHPA (Lettieri-McIntyre and Associates 1996).

3.2.3 Wildlife Corridors

Regional wildlife corridors connect otherwise isolated blocks of habitat allowing movement or dispersal of plants and wildlife over a large scale and the consequent mixing of genes between populations. Local corridors allow wildlife access to resources such as food, water, and shelter within the framework of its daily routine.

Tecolote Canyon Natural Park, which occurs north of the proposed MPU area, is in the MHPA, as is the upper portion of the southern slope of Tecolote Canyon (Figure 4). While these MHPA lands consist of large blocks of native habitat that have the ability to support a diversity of plant and animal life, they do not connect otherwise isolated blocks of habitat allowing movement or dispersal of plants and wildlife on a regional scale. Therefore, Tecolote Canyon and the MHPA within the proposed MPU boundary serve only as a local wildlife corridor.

4.0 REGULATORY CONTEXT

Based on the biological resources present within the proposed MPU area, regulatory administration of the proposed MPU could occur by the federal government, State, and City, as follows.

4.1 FEDERAL

4.1.1 Clean Water Act

Under Section 404 of the Clean Water Act, the USACE is charged with regulating the discharge of dredge and fill materials into jurisdictional WUS. Section 401 of the Clean Water Act requires that any applicant for a federal license or permit to conduct any activity that may result in a discharge to WUS must obtain a Water Quality Certification, or a waiver thereof, from the state in which the discharge originates. In California, the Regional Water Quality Control Board issues Water Quality Certifications. While there are potential WUS within the proposed MPU boundary, the proposed MPU project would not result in any discharges to these WUS.

4.1.2 Migratory Bird Treaty Act

The MBTA (16 U.S. Code Sections 703-711) includes provisions for protection of migratory birds, including the non-permitted take of migratory birds. The MBTA regulates or prohibits taking, killing, possession of, or harm to migratory bird species listed in Title 50 Code of Federal Regulations Section 10.13. Migratory birds include geese, ducks, shorebirds, raptors, songbirds, and many others (including those not sensitive or MSCP Covered species as described in Section 3.2.2.1, *Sensitive Animal Species*). Disturbance that causes nest destruction or abandonment and/or loss of reproductive effort (killing or abandonment of eggs or young) is considered a

"take." The MBTA is an international treaty for the conservation and management of bird species that migrate through more than one country, and is enforced in the United States by the USFWS. The MBTA was amended in 1972 to include protection for migratory birds of prey (raptors). Since it is highly likely that birds nest within the proposed MPU area, the MBTA would apply to the proposed MPU project. As a general/standard condition, the campus must comply with the MBTA during the implementation of the proposed MPU.

4.2 STATE

4.2.1 California Environmental Quality Act

Primary environmental legislation in California is found in the CEQA and its implementing guidelines (State CEQA Guidelines), requiring that projects with potential adverse effects or impacts to the environment undergo environmental review. This report is part of that environmental review. Adverse impacts to the environment are typically mitigated as a result of the environmental review process in accordance with existing laws and regulations. Impacts and mitigation associated with the proposed MPU project are presented in this report in Section 6.0, *Project Impact Analysis*, and Section 7.0, *Mitigation Program*.

4.2.2 California Fish and Game Code

Section 1600 of California Fish and Game Code requires a Streambed Alteration Agreement for any activity that would alter the flow, change or use any material from the bed, channel, or bank of any perennial, intermittent, or ephemeral river, stream, and/or lake (i.e., WS). While there are potential WS within the proposed MPU area, the proposed MPU project would not result in any impacts to these WS.

Pursuant to California Fish and Game Code Section 3503, it is unlawful to take, possess, or needlessly destroy the nest or eggs of any bird, except as otherwise provided by this code or any regulation made pursuant thereto. Raptors and owls and their active nests are protected by California Fish and Game Code Section 3503.5, which states that it is unlawful to take, possess, or destroy any birds of prey or to take, possess, or destroy the nest or eggs of any such bird unless authorized by the CDFW. Section 3513 states that it is unlawful to take or possess any migratory non-game bird as designated in the MBTA. These regulations apply to avian species that include those not sensitive or MSCP Covered species as described in Section 3.2.2.1, *Sensitive Animal Species*, and require that construction activities associated with the proposed MPU project in or adjacent to native habitat (particularly vegetation removal or construction near nests) be reduced or eliminated during critical phases of the nesting cycle unless surveys by a Qualified Biologist demonstrate that nests, eggs, or nesting birds will not be disturbed, subject to approval by CDFW and/or USFWS. As a general/standard condition, the campus must comply with California Fish and Game Code Sections 3503 and 3503.5.

4.3 CITY OF SAN DIEGO

4.3.1 Multiple Species Conservation Program Subarea Plan

The City, USFWS, CDFW and other local jurisdictions joined together in the late 1990s to develop the MSCP, a comprehensive program to preserve a network of habitat and open space in the region and ensure the viability of (generally) upland habitat and species, while still permitting some level of continued development. The City's MSCP Subarea Plan (1997 a) was prepared pursuant to the outline developed by USFWS and CDFW to meet the requirements of the California Natural Communities Conservation Planning (NCCP) Act of 1992. Adopted by the City in March 1997, the Subarea Plan forms the basis for the MSCP Implementing Agreement which is the contract between the City, USFWS, and CDFW (City 1997c). The Implementing Agreement ensures implementation of the Subarea Plan and thereby allows the City to issue "take" permits under the federal and State Endangered Species acts to address impacts at the local level. Under the federal Endangered Species Act, an Incidental Take Permit is required when non-federal activities would result in "take" of a threatened or endangered species. A Habitat Conservation Plan, such as the City's MSCP Subarea Plan, must accompany an application for a federal Incidental Take Permit. In July 1997, USFWS, CDFW, and City entered into the 50-year MSCP Implementing Agreement, wherein the City received its federal Endangered Species Act Section 10(a) Incidental Take Permit (City 1997c).

Pursuant to its MSCP permit issued pursuant to Section 10(a), the City has incidental "take" authority over 85 rare, threatened, and endangered species including regionally sensitive species that it aims to conserve (i.e., "MSCP Covered Species"). "MSCP Covered" refers to species that are covered by the City's federal Incidental Take Permit and considered to be adequately protected within the City's MSCP preserve, the MHPA. Special conditions apply to MSCP Covered Species that would be potentially impacted including designing a project to avoid impacts to Covered Species in the MHPA where feasible. Outside the MHPA, projects must incorporate measures (i.e., Area Specific Management Directives) for the protection of Covered Species as identified in Appendix A of the City's Subarea Plan.

In addition to identifying preserve areas within the City (and guiding implementation of the MSCP within its corporate boundaries), the Subarea Plan also regulates effects on natural communities throughout the City.

4.3.2 Environmentally Sensitive Lands Regulations

ESL include wetlands, sensitive biological resources (other than wetlands), steep hillsides, sensitive coastal bluffs and beaches, and floodplains (SDMC ESL Regulations; Chapter 14, Article 3, Division 1). Environmentally sensitive lands within the proposed MPU boundary include wetlands and Tiers I, II, IIIA, and IIIB uplands. Upland vegetation communities are divided into tiers of sensitivity based on rarity and ecological importance (City 2012). Tier I includes rare uplands. Tier II includes uncommon uplands. Tiers IIIA and IIIB include common uplands. Tier IV, which includes "other" uplands, is not sensitive (City 2012). Wetlands are not assigned a tier but are still sensitive (see Section 3.2.1.2, *Sensitive Vegetation Communities*).

The purpose of the ESL Regulations is to, "protect, preserve and, where damaged, restore the ESL of San Diego and the viability of the species supported by those lands." The regulations require that development avoid impacts to certain sensitive biological resources as much as possible including all MHPA lands; wetlands and vernal pools in naturally occurring complexes; federal and State listed, non-MSCP Covered Species; and MSCP Narrow Endemic species. Furthermore, the ESL Regulations state that wetlands impacts should be avoided, and unavoidable impacts should be minimized to the maximum extent practicable. In addition to protecting the wetlands, the ESL Regulations require that a buffer be maintained around wetlands to protect wetland-associated functions and values (City 2012).

4.3.3 Biology Guidelines

The City's Biology Guidelines (2012) have been formulated to aid in the implementation and interpretation of the ESL Regulations; San Diego Land Development Code, Chapter 14, Division 1, Section 143.0101 et seq; and the Open Space Residential (OR-1-2) Zone, Chapter 13, Division 2, Section 131.0201 et seq. Section III of the Biology Guidelines (Biological Impact Analysis and Mitigation Procedures) also serve as standards for the determination of impact and mitigation under CEQA. The Biology Guidelines are the baseline biological standards for processing permits issued pursuant to ESL Regulations. The assessment of impacts to, and mitigation for, sensitive vegetation communities and plant and animal species presented in this document follows those regulations and guidelines.

5.0 REGIONAL CONTEXT

5.1 MULTIPLE SPECIES CONSERVATION PROGRAM EVALUATION

The City's MSCP Subarea Plan (City 1997a) was prepared to meet the requirements of the California NCCP Act of 1992. The Subarea Plan is consistent with the NCCP and is a stand-alone document that describes how proposed development projects may be implemented relative to the City's MSCP Preserve, the MHPA.

5.1.1 Multi-habitat Planning Area

The MHPA was developed by the City in cooperation with the USFWS, CDFW, property owners, developers, and environmental groups using the Preserve Design Criteria contained in the MSCP Plan, and the City Council-adopted criteria for the creation of the MHPA.

MHPA lands are large blocks of native habitat that have the ability to support a diversity of plant and animal life and, thus, have been included within the City's MSCP Subarea Plan for habitat conservation. The MHPA also delineates core biological resource areas and corridors targeted for conservation as these lands have been determined to provide the necessary habitat quality, quantity, and connectivity to sustain the unique biodiversity of the San Diego region. While MHPA lands are considered by the City to be a sensitive biological resource and intended to be mostly void of development activities, development is allowed in the MHPA subject to the requirements of the MSCP Plan.

As part of the MPU process, areas designated within the MHPA were reviewed for their applicability to conservation of environmentally sensitive lands. It was determined that some MHPA mapped as part of the MSCP process include areas containing existing campus development (i.e., buildings, streets). Therefore, an evaluation of the areas of existing developed land was conducted to determine if they should be removed from the MHPA. Aerial photographs and permits were reviewed to assess the developed areas status as of the adoption of the MSCP Subarea Plan in 1997. The assessment identified four areas along the northern proposed MPU boundary totaling 0.61 acre of already developed land, as shown on Figure 5. Because the assessment determined that these areas were developed prior to adoption of the MSCP Subarea Plan and creation of the MHPA, the MPU is proposing to shift these areas out of the MHPA through a Boundary Line Correction. The proposed MHPA Boundary Line Correction was considered in coordination with the CDFW and USFWS and is consistent with the goals of the MSCP to conserve biological resources and allow for existing and future development in appropriate areas. The proposed Boundary Line Correction was approved via e-mail from the City. The evaluation process considered the following factors:

- The proposed area to be corrected out was legally permitted or
- No habitat, including wetlands, would be removed;
- No buffer area (e.g., wetland buffer or wildlife corridor) would be impacted; and
- Removing the area from the MHPA would not avert the proposed MPU project from having to otherwise comply with the City's MSCP Land Use Adjacency Guidelines (LUAG).

Based on that evaluation it was determined that the on-site MHPA contains 0.61 acre of developed land that has been part of the USD campus and permitted for development under the existing CUP/RPO Permit No. 92-0568 (LDR 98-0239). The corrections would remove that 0.61 acre of developed land and would not conflict with the conservation goals of the MSCP Subarea Plan. Aerial photos show that all of those areas were developed as of 1996. In particular, the corrections proposed for projects 20 and 27 are in areas previously used for a physical plant building and Mission Apartments, respectively. Because all of these areas are already developed, no habitat would be removed. The developed land is not adjacent to any wetland, so no wetland buffers would be removed. A wildlife corridor would not be impacted because while the MHPA in the proposed MPU area acts as a local corridor allowing wildlife access to resources such as food, water, and shelter, developed land does not serve this purpose. Finally, removing the developed land from the MHPA would not avert the need to comply with the City's *Land Use Adjacency Guidelines*. The MPU project's compliance with the LUAG is addressed in Section 6.4.2.1, *MHPA Land Use Adjacency Guidelines*.

An MHPA Boundary Line Adjustment removes land from the MHPA for development while adding land that is of equivalent or higher biological value to the MHPA. The determination of the biological value of a proposed boundary change is made by the City in accordance with the MSCP Plan and with the concurrence of the USFWS and CDFW. The impact footprints for each of the 14 proposed projects shown on Figure 4 are considered the worst-case scenario, and none would impact the MHPA. Therefore, an MHPA Boundary Line Adjustment is not anticipated to be necessary as part of the proposed MPU or in the future.

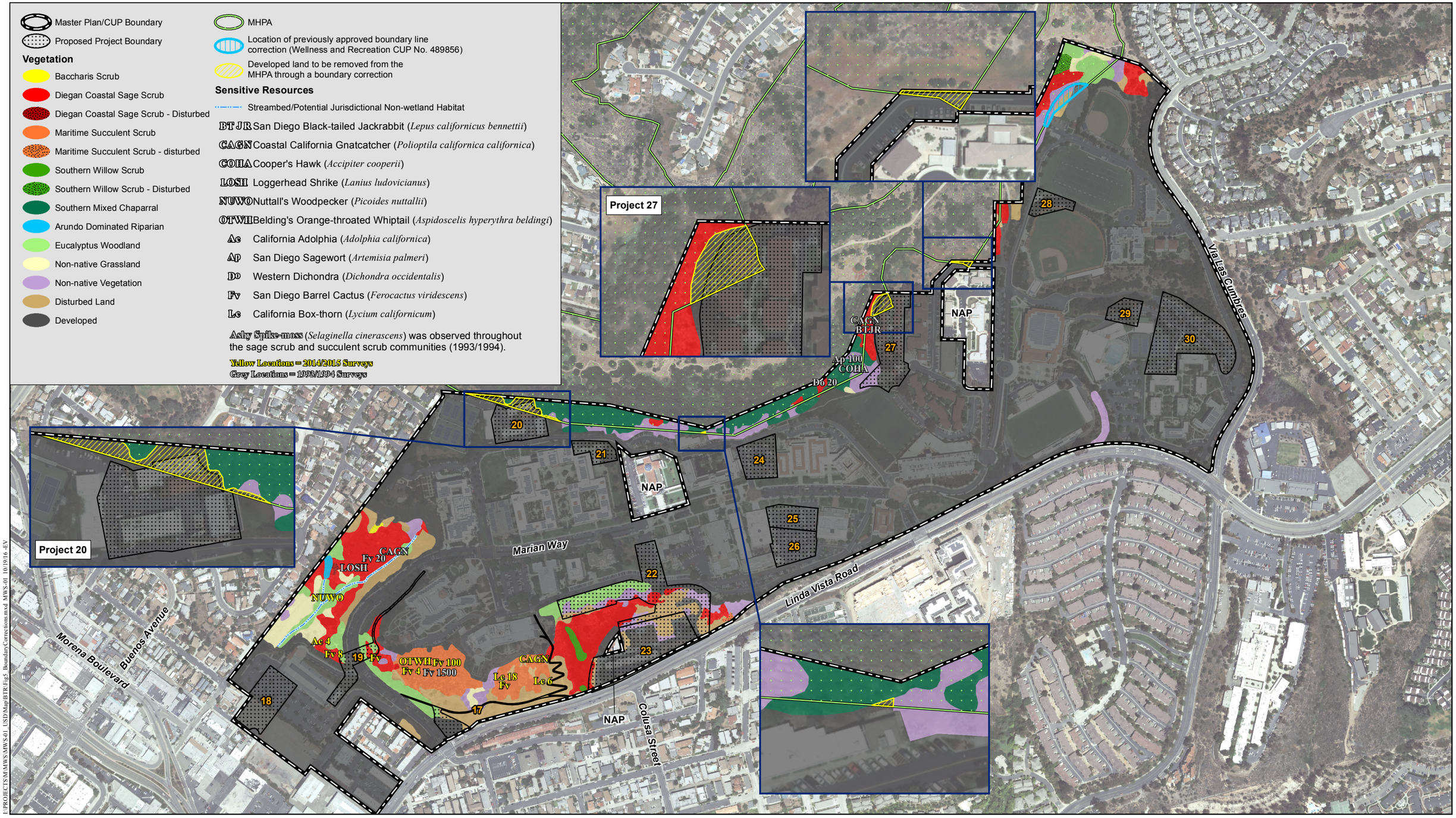

MHPA Boundary Line Corrections

UNIVERSITY OF SAN DIEGO MASTER PLAN UPDATE

HELIX Environmental Planning

0 500 Feet

Figure 5

I:\PROJECTS\M\MWS\MWS-01_USD\Map\BTR\Fig5_BoundaryCorrections.mxd MWS-01 10/19/16 -EV

5.1.2 Multi-habitat Planning Area Land Use Adjacency Guidelines

Land uses adjacent to the MHPA are to be managed to ensure that indirect impacts to the MHPA are minimized. The City has published LUAG as part of the City's MSCP Subarea Plan, which outline these management requirements and address indirect effects related to drainage, toxics, lighting, noise, barriers, invasives, brush management, and grading/land development. Because the proposed MPU includes proposed projects adjacent to the MHPA, compliance with the LUAG would be required as discussed in Section 6.4.2.1, *MHPA Land Use Adjacency Guidelines*.

5.1.3 Covered Species

As described in Section 4.3.1, *Multiple Species Conservation Program Subarea Plan*, the MSCP Subarea Plan identifies 85 MSCP Covered Species that occur within the MHPA. Projects should be designed to avoid impacts to Covered Species where feasible. In addition, projects must comply with Area Specific Management Directives for the protection of Covered Species as identified in Appendix A of the City's Subarea Plan. Covered Species observed (San Diego barrel cactus, coastal California gnatcatcher, Cooper's hawk, and Belding's orange-throated whiptail) and the Area Specific Management Directives for each of these species are addressed in Section 6.4.2.2, *Area Specific Management Directives for Covered Species*.

6.0 PROJECT IMPACT ANALYSIS

This section presents an impact analysis for the proposed MPU project. This section includes analyses of direct impacts, indirect impacts including MHPA adjacency issues, and significance determinations in accordance with City significance criteria.

6.1 CRITERIA FOR DETERMINING IMPACT SIGNIFICANCE

In accordance with Significance Determination Guidelines (Appendix I in City 2012), a project would result in a significant or potentially significant biological resources impact if it would result in:

1. A substantial adverse impact, either directly or through habitat modifications, on any species identified as a candidate, sensitive, or special status species in the MSCP or other local or regional plans, policies or regulations, or by the CDFW or USFWS.

2. A substantial adverse impact on any Tier I Habitats, Tier II Habitats, Tier IIIA Habitats, or Tier IIIB Habitats as identified in the Biology Guidelines of the Land Development manual or other sensitive natural community identified in local or regional plans, policies, regulations, or by the CDFW or USFWS.

3. A substantial adverse impact on wetlands (including, but not limited to, marsh, vernal pool, riparian, etc.) through direct removal, filling, hydrological interruption, or other means.

4. Interfering substantially with the movement of any native resident or migratory fish or wildlife species or with established native resident or migratory wildlife corridors, including linkages identified in the MSCP Plan, or impede the use of native wildlife nursery sites.

5. A conflict with the provisions of an adopted Habitat Conservation Plan, Natural Conservation Community Plan, or other approved local, regional, or state habitat conservation plan, either within the MSCP plan area or in the surrounding region.

6. Introducing land use within an area adjacent to the MHPA that would result in adverse edge effects.

7. A conflict with any local policies or ordinances protecting biological resources.

8. An introduction of invasive species of plants into a natural open space area.

6.2 DIRECT IMPACTS

Direct impacts immediately alter the affected biological resources such that those resources are eliminated such as through the removal of vegetation.

6.2.1 Direct Impacts to Vegetation Communities/Land Cover Types

The proposed MPU would result in direct impacts to 20.3 acres, and all impacts would be outside the MHPA (Table 3; Figure 4). No wetland/riparian communities would be impacted. All of the impacts are assumed herein to be permanent.

Table 3 IMPACTS TO VEGETATION COMMUNITIES/ LAND COVER TYPES			
VEGETATION COMMUNITY	**TIER**	**ACREAGE IMPACTED[1]**	**PROJECT NUMBER**
Wetland/Riparian			
Southern willow scrub	--	--	--
Southern willow scrub–disturbed	--	--	--
Arundo dominated riparian	--	--	--
Subtotal Wetland/Riparian		**--**	**--**
Upland			
Maritime succulent scrub	I	--	--
Maritime succulent scrub–disturbed	I	--	--
Diegan coastal sage scrub	II	0.5	17, 19, 22, 23
Diegan coastal sage scrub–disturbed	II	--	--
Baccharis scrub	II	--	--
Southern mixed chaparral	IIIA	--	--
Non-native grassland	IIIB	--	--
Subtotal Upland		**0.5**	**17, 19, 22, 23**
Other Upland			
Eucalyptus woodland	IV	0.9	17, 19, 22
Disturbed land	IV	1.9	17, 22, 23
Subtotal Other Upland		**2.8**	**17, 19, 22, 23**
Other			
Non-native vegetation	--	0.9	17, 22, 23, 27
Developed	--	16.1	17-30
Subtotal Other		**17.0**	**--**
TOTAL		**20.3**	**17-30**

[1] All impacts would be outside the MHPA. Impacts include Zone 1 brush management. Where Zone 2 would encroach into the MHPA, USD would request approval for alternative compliance to avoid the impacts (see Section 6.4.2.1, *MHPA Land Use Adjacency Guidelines*).

As described in Section 3.2.1.2, Sensitive Vegetation Communities, lands outside the MHPA that contain Tier I, Tier II, Tier IIIA, or Tier IIIB habitats are considered sensitive. There would be direct impacts to 0.5 acre of Tier II uplands outside the MHPA from Projects 17, 19, 22, and 23 as listed in Table 3 and shown on Figure 4. These four projects are: 17) Lower Olin Future Study Area; Proposed Trails/Landscape Enhancements, 19) Plaza/Mall/Bridge, 22) Academic/Administrative Building, and 23) Housing/Parking Structure. All other projects would avoid direct impacts to sensitive habitats. Impacts to 0.5 acre of Tier II uplands outside the MHPA would be significant according to Significance Criterion 2 (substantial adverse impact on sensitive natural communities), and mitigation would be required. There would be no impacts to City wetlands (and also no impacts to potential WUS and WS; Significance Criterion 3); no mitigation would be required.

The construction area for Project 19 (Plaza/Mall/Bridge) would encroach into a portion of the western deed-restricted areas. These areas, however, were not previously used as mitigation (City 1997b) according to the 1996 Master Plan FEIR, and according to the Declaration of

Restrictions (City 1997b), CUP/RPO Permit No. 92-0568 can be amended by action of the City Council as part of the proposed MPU to change the allowable uses in these areas.

Direct impacts to Tier IV other uplands and other communities (i.e., non-native vegetation and developed) would be less than significant because they are not considered sensitive, and no mitigation would be required.

6.2.2 Direct Impacts to Sensitive Plant Species

The proposed MPU project could result in direct impacts to as many as nine San Diego barrel cactus (from Project 19) and ashy spike-moss that may occur within impacted Diegan coastal sage scrub (from Projects 17, 19, 22, and 23; Figure 4).

Direct impacts to San Diego barrel cactus would be less than significant according to Significance Criterion 1 (substantial adverse impact on a special status species). While San Diego barrel cactus has a CNPS Rare Plant Rank 2B.1 (rare, threatened, or endangered in California but more common elsewhere, greater than 80 percent of occurrences threatened), it is not federal or State listed, and it is an MSCP Covered Species (Appendix C) considered to be adequately protected in the MHPA. This population lies outside of the MHPA. To the extent feasible, USD would attempt to transplant any barrel cacti that would be impacted by Project 19 to appropriate habitat within the campus boundary.

Direct impacts to ashy-spike moss would be less than significant according to Significance Criterion 1 (substantial adverse impact on a special status species) due to this species' low level of sensitivity. Ashy spike-moss has a CNPS California Rare Plant Rank of 4.2; it is not federal or State listed; nor is it a City Narrow Endemic species (Appendix C).

The proposed MPU project would not directly impact California box-thorn, California adolphia, San Diego sagewort, and western dichondra (Figure 4). Other sensitive plant species that were not observed but were considered for their potential to occur there (Appendix D) were all determined to have either no potential to occur or low potential to occur. Therefore, these species are not likely to be present and directly impacted by the proposed MPU project.

6.2.3 Direct Impacts to Sensitive Animal Species

The proposed MPU project would result in direct impacts to sage scrub, succulent scrub, grassland, and eucalyptus woodland communities where the following sensitive animal species were observed: coastal California gnatcatcher, loggerhead shrike, Nuttall's woodpecker, and Belding's orange-throated whiptail. While the San Diego black-tailed jackrabbit was also observed (but not on a proposed project site), it was observed adjacent to Tecolote Canyon and is not expected to occupy habitats within the proposed MPU area away from Tecolote Canyon that would be directly impacted due to their isolation and location surrounded by existing development. No mitigation would be required. While the Cooper's hawk was also not observed in an area that would be directly impacted, this species has potential to utilize other areas within the proposed MPU boundary that would be directly impacted. The Cooper's hawk is addressed further below.

It is assumed herein that all maritime succulent scrub and Diegan coastal sage scrub is occupied by the coastal California gnatcatcher. The gnatcatcher would be directly impacted through habitat loss outside the MHPA by Projects 17, 19, 22, and 23 (Figure 4). There would be no direct impacts to the MHPA from the proposed MPU project and, therefore, no direct impacts to coastal California gnatcatchers within the MHPA (Significance Criterion 1).

Like the gnatcatcher, direct impacts to Belding's orange-throated whiptail and Cooper's hawk from loss of habitat outside the MHPA from Projects 17, 19, 22, and 23 (Figure 4) would be less than significant, because these species are also MSCP Covered Species considered to be adequately protected in the MHPA. Therefore, there would be no direct, substantial adverse impacts to these species (Significance Criterion 1).

Direct impacts to the loggerhead shrike (federal Bird of Conservation Concern and State Species of Special Concern; Appendix C) and Nuttall's woodpecker (federal Bird of Conservation Concern) from loss of habitat from Projects 17, 19, 22, and 23 (Figure 4) would be less than significant due to these species' lower levels of sensitivity, and there would be no direct, substantial adverse impact on these species (Significance Criterion 1).

Other sensitive animal species that were not observed but were considered for their potential to occur there (Appendix F) were all determined to have low potential to occur except the southern California rufous-crowned sparrow (*Aimophila ruficeps canescens*), which has moderate potential to occur in scrub and chaparral habitats. Those species with low potential to occur are not likely to be present and directly impacted by the proposed MPU project. Direct impacts to the southern California rufous-crowned sparrow from Diegan coastal sage scrub habitat loss from Projects 17, 19, 22, and 23 outside the MHPA would be less than significant because this sparrow is an MSCP Covered Species considered to be adequately protected in the MHPA. Therefore, there would be no direct, substantial adverse impact on the southern California rufous-crowned sparrow outside the MHPA should it be present (Significance Criterion 1).

6.2.4 Direct Impacts to Wildlife Corridors

The MHPA within the proposed MPU boundary serves as part of the Tecolote Canyon local wildlife corridor. The proposed MPU project would not directly impact the MHPA and interfere with the movement of wildlife (Significance Criterion 4).

6.3 INDIRECT IMPACTS

Indirect impacts consist of secondary effects of project development including those from drainage and toxics, lighting, noise, public access, invasive plant species, and fugitive dust. Indirect impacts from construction activity can also affect nesting birds. The magnitude of an indirect impact can be the same as a direct impact, but the effect may take longer to become apparent. In addition to project features and standard requirement adherence, compliance with the MHPA LUAG would reduce the following impacts to below a level of significance.

6.3.1 Indirect Impacts From Drainage and Toxics

The release and spread of toxins, chemicals, petroleum products, and other elements can degrade or harm the natural environment or ecosystems processes. Should this occur in ESL or in the MHPA, the impacts would be significant according to Significance Criteria 1 (impact on special status species), 2 (impact on a sensitive natural community), and 3 (impact on wetlands). All potential drainage and toxics impacts, however, would be minimized through the required use of the City's Construction Site Best Management Practices (SDMC §43.0301), compliance with the LUAG, and by project design as outlined in the proposed MPU that would capture, treat, and store storm water runoff before it enters undeveloped or transitional areas consistent with the existing drainage conditions and per current storm water regulations. Therefore, potential impacts resulting from drainage or impaired water quality from the proposed MPU project would be less than significant.

6.3.2 Indirect Impacts From Lighting

Night lighting exposes wildlife to an unnatural light regime that may adversely affect foraging patterns, increase predation risk, cause biological clock disruptions, and result in a loss of species diversity. Lighting can be a significant indirect impact according to Significance Criterion 1 (impact to special status species) if it spills into ESL or into the MHPA. Potential night lighting impacts (if used during construction) would be minimized to less-than-significant levels, however, by the proposed MPU project by adherence to the City's Outdoor Lighting Regulations (SDMC §142.0740).

6.3.3 Indirect Impacts From Noise

Construction-related noise from such sources as clearing, grading, and construction vehicular traffic would be a temporary impact to wildlife from implementation of the proposed MPU project.

These noise-related impacts would be considered significant according to Significance Criterion 1 (impact to special status species), however, if species sensitive to noise are present. This would apply to the coastal California gnatcatcher, as follows—but only in the MHPA. It is assumed herein that Diegan coastal sage scrub in the MHPA within the proposed MPU boundary and in Tecolote Canyon is occupied by the gnatcatcher, and the gnatcatcher could be affected by construction of Projects 20, 21, 24, 27, and 28.

The proposed MPU project, however, would comply with the LUAG for noise, which would reduce potential noise-related impacts to the MHPA to a less than significant level as described in Section 6.4.2.1, *MHPA Land Use Adjacency Guidelines*. The City has take authorization for the coastal California gnatcatcher, so noise impacts to this species outside the MHPA are allowed.

6.3.4 Indirect Impacts From Public Access

Public access to natural areas can result in impacts such as trails being created and trash being dumped, which can significantly impact special status species (Significance Criterion 1) and sensitive natural communities (Significance Criterion 2) and result in a land use within an area adjacent to the MHPA or ESL that would result in adverse edge effects (Significance Criterion 6).

The proposed MPU project includes a proposed trail and pedestrian bridge in the western part of the proposed MPU area outside the MHPA (Projects 17 and 19; Figure 4) that would travel through sensitive Diegan coastal sage scrub that supports sensitive plant and animal species (i.e., ESL). There are already unauthorized trails through this community, and it is expected that the proposed, established trail and bridge would minimize the creation of new, unauthorized trails and/or the continued use of existing unauthorized trails. The proposed trail and bridge through on-site vegetation communities are expected to raise awareness, direct access, and reduce indirect impacts from public access, thereby benefitting special status species and sensitive natural communities.

In the northeastern portion of the proposed MPU area, there are also existing trails that connect USD and Tecolote Canyon (the MHPA) via the MHPA west of Fowler Park and Cunningham Field within the proposed MPU boundary where the topography is not too steep. The remainder of the proposed MPU boundary/MHPA interface consists of steep slopes that are vegetated primarily with southern mixed chaparral, and which, thus far, have prevented the creation of other trails into the MHPA and down into Tecolote Canyon. Compliance with the LUAG measure for this issue will ensure impacts are prevented/reduced to a less-than-significant level.

The proposed MPU also includes a provision that any perimeter fencing along Tecolote Canyon be designed and located in coordination with the City Park and Recreation and Landscape departments. The installation of such fencing would further ensure that campus edge effects are minimized. The signage to educate students on the natural history, flora, and fauna of Tecolote Canyon and along all campus trails through or adjacent to natural open space proposed in the MPU/design guidelines would be coordinated with the City Park and Recreation department.

6.3.5 Indirect Impacts From Invasive Plant Species

Invasive, non-native plants can displace native plants; reduce species diversity; increase flammability and fire frequency; change ground and surface water levels; and adversely affect native wildlife dependent on the native flora. Invasive, non-native plants can colonize areas disturbed by construction and potentially spread into adjacent natural communities (i.e., ESL) and the MHPA. Invasive, non-native plants can also spread from landscaping into adjacent natural communities and the MHPA.

The potential spread of invasive, non-native plant species to natural communities (ESL) within the proposed MPU boundary or into the MHPA from construction activities would be considered a significant impact according to Significance Criterion 1 (impact to special status species),

Significance Criterion 2 (impact to sensitive natural community), and Significance Criterion 8 (introduction of invasive plant species).

SDMC Landscape Standards (Section 1.3) would be followed during implementation of the proposed MPU project so that no potentially invasive plant species are planted adjacent to the MHPA. Furthermore, the proposed MPU includes design guidelines for planting disturbed and undeveloped areas adjacent to native areas (i.e., ESL) with compatible San Diego County native or climate adapted plant species that are not on the California Invasive Plant Council's list of invasive species.

Additionally, existing invasive plant species (i.e., pampas grass [*Cortaderia selloana*] and fountain grass [*Pennisetum setaceum*]; Appendix B) would be removed as part of the proposed MPU on a project-by project basis as required by SDMC (Chapter 14, Article 2, Division 4). This code requires that all existing, invasive plant species, including vegetative parts and root systems, be completely removed from the premises when the combination of species type, location, and surrounding environmental conditions provides a means for the species to invade other areas of native plant material that are on or off of the premises. Project 17, in particular, calls for such landscape enhancements. Therefore, the potential impact from the spread of invasive, non-native species from landscaping would be minimized to a less-than-significant level.

While giant reed, another invasive plant species, is present within the proposed MPU boundary, it occurs in a single patch in a drainage (Arundo dominated riparian; Figure 4). In North America, giant reed does not appear to produce viable seed. Rather, the species spreads through vegetative reproduction either from underground rhizome extension or from plant fragments carried downstream that become rooted (California Invasive Plant Council 2015a). The vegetation immediately downstream of the giant reed supports non-native eucalyptus woodland. Therefore, any downstream spread of giant reed would not impact native plant material on site. The drainage flows into a public storm drain within Morena Boulevard off site that flows into Mission Bay where the plant is not likely to survive, and there is no native plant material (vegetated habitat) to be impacted.

6.3.6 Indirect Impacts From Fugitive Dust

Fugitive dust produced by construction can disperse onto adjacent native vegetation inside and outside the MHPA and significantly affect special status species (Significance Criterion 1), sensitive natural communities (Significance Criterion 2), and wetlands (Significance Criterion 3). A continual cover of dust can reduce the overall vigor of individual plants by reducing their photosynthetic capabilities and increasing their susceptibility to pests or disease. This, in turn, could affect animals dependent on these plants (e.g., seed-eating rodents). Fugitive dust also may make plants unsuitable as habitat for wildlife.

Construction of the proposed MPU project would include the use of dust control measures required in SDMC Section 142.0101 et seq. Therefore, construction of the proposed MPU project would result in less-than-significant impacts from fugitive dust.

6.3.7 Indirect Impacts To Nesting Birds

According to the MBTA, disturbance that causes nest abandonment and/or loss of reproductive effort (killing or abandonment of eggs or young) is considered a "take." Additionally, California Fish and Game Code regulations may require that construction activities (particularly vegetation removal or construction near nests) be reduced or eliminated during critical phases of the nesting cycle unless surveys by a Qualified Biologist demonstrate that nests, eggs, or nesting birds will not be disturbed. The proposed MPU project must comply with all applicable State and federal regulations.

The City considers that any development inside the MHPA, which identifies the occurrence of the following MSCP Covered species, must include an impact avoidance area as follows (City 2012):

- 300 feet of any nesting site of Cooper's hawk.
- 900 feet of any nesting sites of northern harriers (*Circus cyaneus*)
- 4,000 feet of any nesting sites of golden eagles (*Aquila chrysaetos*)
- 300 feet from any occupied burrow of burrowing owls (*Athene cunicularia*)

The MPU project does not propose any development in the MHPA due to the proposed Boundary Line Correction. Development of Projects 20, 21, 24, 27, and 28 may occur within 300 feet of a Cooper's hawk nest in the MHPA, however. Implementation of Mitigation Measure BIO-3 would avoid impacts to Cooper's hawk nesting in the MHPA.

6.4 CONFLICTS WITH PLANS AND POLICIES

Significance Criterion 5 asks whether or not a project would conflict with the provisions of an adopted Habitat Conservation Plan, Natural Conservation Community Plan, or other approved local, regional, or state habitat conservation plan, either within the MSCP plan area or in the surrounding region (in this case, the City's MSCP Subarea Plan). The proposed MPU area is partially within the MHPA, which is the preserve area assembled under the MSCP. The proposed MPU project would include an MHPA Boundary Line Correction to remove already-developed areas from the MHPA (Figure 4). The proposed MPU project would not directly impact the MHPA and would comply with the MHPA LUAG to protect the MHPA either through project design or implementing mitigation. The proposed MPU project would also comply with Area Specific Management Directives for MSCP Covered Species in the MHPA (coastal California gnatcatcher, Cooper's hawk, and Belding's orange-throated whiptail). Compliance with the guidelines and directives is addressed in Section 6.4.2, *MSCP Consistency.* The proposed MPU project would, therefore, not conflict with the provisions of the City's MSCP Subarea Plan.

Significance Criterion 7 asks whether or not a project would conflict with any local policies or ordinances protecting biological resources. The City's ESL Regulations require that development avoid impacts to certain sensitive biological resources as much as possible including all MHPA lands; wetlands; and federal and State listed, non-MSCP Covered Species. The proposed MPU avoids direct impacts to the MHPA and wetlands, and no federal and State listed, non-MSCP Covered Species are present within the proposed MPU boundary. The proposed MPU project

would be required mitigate for significant impacts to sensitive upland communities (i.e., those in Tiers I through IIIB) in accordance with the City's Biology Guidelines, which provide baseline biological standards for permits issued pursuant to ESL Regulations. That mitigation is provided in Section 7.1.1, *Mitigation for Direct Impacts to Sensitive Vegetation Communities*. Therefore, the proposed MPU would not conflict with ESL Regulations.

6.4.1 Wetland Buffers

Furthermore, the ESL Regulations require that a buffer be maintained around wetlands to protect wetland-associated functions and values (City 2012). With the trail (Project 17; approximate 50-foot buffer), academic/administrative building (Project 22; approximate 50-foot buffer), and housing/parking structure (Project 23; approximate 25-foot buffer; Figure 4), it is presumed that the distances proposed are sufficient to protect the functions and values of these small, isolated pockets of vegetation as follows.

Human intrusion is not expected to be an issue due to the locations of these pockets of vegetation in the vegetated drainage bottom, and the trail would direct foot traffic that currently occurs on unauthorized trails around this drainage.

Storm water runoff from this portion of campus currently flows into the natural drainage tributary where the southern willow scrub occurs (Kettler Leweck Engineering 2015). The new built structures (Projects 22 and 23) would create additional impervious surfaces around the drainage that would produce for more surface water runoff than currently exists, which would maintain the wetland vegetation. Water quality in the drainage would be protected during construction through the use of the City's Construction Site Best Management Practices (SDMC §43.0301) and from the built projects as outlined in the proposed MPU (i.e., storm water runoff would be captured, treated, and stored before it enters undeveloped or transitional areas). Therefore, the proposed MPU would not conflict with ESL Regulations regarding wetland buffers, and no deviations from the regulations would be required.

6.4.2 Multiple Species Conservation Program Consistency

This section addresses the proposed MPU project's compliance with the MHPA LUAG and Area Specific Management Directives for Covered Species for proposed projects adjacent to the MHPA.

6.4.2.1 Multi-habitat Planning Area Land Use Adjacency Guidelines

Two proposed projects (Projects 20 and 27; Figure 4) would be adjacent to the MHPA (Tecolote Canyon) and subject to the MHPA LUAG. Other proposed projects (Projects 24 and 28 through 30) occur in drainage basins identified where surface flows are directed to the MHPA (i.e., Tecolote Canyon; Kettler Leweck Engineering 2016). Therefore, these projects, while not immediately adjacent to the MHPA, may still adversely affect the MHPA.

Project 20 would involve the development of academic/administrative/support space and currently supports a facilities maintenance complex that includes a physical plant building

(approved prior to the 1996 Master Plan) and a cooling tower (constructed since the 1996 Master Plan was approved). It is expected that the project site would be redeveloped through the removal of existing buildings and construction of new buildings as part of the proposed MPU.

Project 27 would involve the redevelopment of the Mission Housing Complex with new housing/student services space. The Mission Housing Complex was constructed prior to the 1996 Master Plan (and received exterior renovations under the 1996 Master Plan; City 1996). It is expected that the project site would be redeveloped through the removal of existing buildings and construction of new buildings as part of the proposed MPU. Compliance with the LUAG will be condition of approval (incorporated as requirements listed below in the permit) of the MPU project.

The following sections list the specific LUAG and LUAG requirements and include an explanation as to how the proposed MPU project would comply with those requirements.

Drainage

LUAG: *All new and proposed parking lots and developed areas in and adjacent to the preserve must not drain directly into the MHPA. All developed and paved areas must prevent the release of toxins, chemicals, petroleum products, exotic plant materials and other elements that might degrade or harm the natural environment or ecosystem processes within the MHPA.*

MPU Project Compliance: Surface runoff from the existing facilities maintenance complex currently travels via sheet flow downslope to the north into drainages tributary to Tecolote Canyon, and runoff from the existing Mission Housing Complex travels through a pipe network that discharges into Tecolote Canyon (Appendix G, Geology and Hydrology Report, in City 1996). And, while not immediately adjacent to the MHPA, surface flows on sites for Projects 24 and 28 through 30 are also currently directed to Tecolote Canyon (Kettler Leweck Engineering 2016). Project design elements for these proposed projects (per the proposed MPU) would capture, treat, and store storm water runoff per current storm water regulations before it enters the MHPA. Therefore, the proposed MPU project would comply with this LUAG for these projects adjacent to, or that may affect, the natural environment or ecosystem processes within the MHPA.

Toxics

LUAG: *Land uses, such as recreation and agriculture, that use chemicals or generate by-products such as manure, that are potentially toxic or impactive to wildlife, sensitive species, habitat, or water quality need to incorporate measures to reduce impacts caused by the application and/or drainage of such materials into the MHPA.*

MPU Project Compliance: The proposed land uses for all projects that occur within basins that drain into Tecolote Canyon (Projects 20, 24 and 27 through 30; Kettler Leweck Engineering 2015) do not include land uses that use chemicals or generate by-products potentially toxic or impactive to wildlife, sensitive species, habitat, or water quality. Projects 28 through 30, however, would include athletics facilities that could include the use of chemicals (e.g.,

fertilizers and herbicides). Project design elements for these athletics facilities (per the proposed MPU), however, would capture, treat, and store storm water runoff per current storm water regulations before it enters the MHPA.

Lighting

LUAG: *Lighting of all developed areas adjacent to the MHPA should be directed away from the MHPA. Where necessary, development should provide adequate shielding with non-invasive plant materials (preferably native), berming, and/or other methods to protect the MHPA and sensitive species from night lighting.*

MPU Project Compliance: The proposed MPU project would adhere to the City's Outdoor Lighting Regulations (SDMC §142.0740).

Noise

LUAG: *Uses in or adjacent to the MHPA should be designed to minimize noise impacts…that could impact or interfere with wildlife utilization of the MHPA.*

MPU Project Compliance: The proposed MPU includes two projects adjacent to the MHPA: an academic/administrative/support project (Project 20) and housing/student services (Project 27; Figure 4). Neither of these types of facilities is expected to generate noise of sufficient volume or duration to interfere with wildlife utilization of the MHPA. As stated in Section 6.3.3, it is assumed that Diegan coastal sage scrub in the MHPA within the proposed MPU boundary and in Tecolote Canyon is occupied by the gnatcatcher, and the gnatcatcher could be affected by construction noise from Projects 20, 21, 24, 27, and 28. The proposed MPU project would comply with the above-listed LUAG requirements.

Barriers

LUAG: *New development adjacent to the MHPA may be required to provide barriers…along the MHPA boundaries to direct public access to appropriate locations and reduce domestic animal predation.*

MPU Project Compliance: New development adjacent to the MHPA would include a proposed academic/administrative/ support project (Project 20) and a proposed housing/student services project (Project 27; Figure 4). The proposed MPU boundary/MHPA interface around these proposed projects consists of steep slopes that are vegetated primarily with southern mixed chaparral, and which, thus far, have prevented the creation of trails into the MHPA and down into Tecolote Canyon. It is, therefore, unlikely that redevelopment of these project sites would promote new access to the MHPA, and barriers are not expected to be necessary. The proposed MPU includes a provision for appropriate barriers such as perimeter fencing and other barriers such as boulders, where needed, along with appropriate signage that would further deter any new trails. The proposed MPU states that the City Parks and Recreation and Landscape departments will participate in determining barrier and signage design and locations adjacent to Tecolote Canyon and other biologically sensitive areas on campus.

There is already student housing on the site of Project 27, and redevelopment of that site would be for housing/student services. USD has rules to prevent animals from living in the housing unless they are service animals, so predation of wildlife in the MHPA from the housing/student services use would not be an issue.

Invasives

LUAG: *No invasive plant species shall be introduced into areas in or adjacent to the MHPA.*

MPU Project Compliance: SDMC Landscape Standards (Section 1.3; City 1997d) would be followed during implementation of the proposed MPU so that no new potentially invasive plant species are planted adjacent to the MHPA. Furthermore, the proposed MPU includes design guidelines for planting disturbed and undeveloped areas adjacent to native areas with compatible San Diego County native or climate adapted plant species that are not on the California Invasive Plant Council's list of invasive species. Therefore, no invasive plant species would be introduced into areas adjacent to the MHPA.

Additionally SDMC (Chapter 14, Article 2, Division 4) requires that all existing, invasive plant species, including vegetative parts and root systems, be completely removed from the premises when the combination of species type, location, and surrounding environmental conditions provides a means for the species to invade other areas of native plant material that are on or off of the premises. There are three invasive species within the proposed MPU boundary that are prohibited per SDMC Landscape Standards (Section 1.3; City 1997d): giant reed, pampas grass, and fountain grass (Appendix B). Other non-native species found within the MPU boundary are also listed in Appendix B.

Giant reed occurs in a single patch in a drainage (Arundo dominated riparian) approximately 1,250 feet from the MHPA (Figure 4). As described in Section 6.3.5, *Indirect Impacts From Invasive Plant Species*, in North America, giant reed does not appear to produce viable seed. Rather, the species spreads through vegetative reproduction either from underground rhizome extension or from plant fragments carried downstream that become rooted (California Invasive Plant Council 2015a). The vegetation immediately downstream of the giant reed is also not in the MHPA and supports non-native eucalyptus woodland. Therefore, any downstream spread of the species would not impact native plant material on site or in the MHPA. The drainage flows into a public storm drain within Morena Boulevard off site that flows into Mission Bay (outside the MHPA) where the plant is not likely to survive, and there is no native plant material (vegetated habitat) to be impacted.

Pampas grass has escaped cultivation presumably by fragmentation of the parent plant or by seed (California Invasive Plant Council 2015b). Fountain grass is easily dispersed by wind, water, and possibly birds, among other means (California Invasive Plant Council 2015c). Pampas grass and fountain grass were observed within the proposed MPU boundary in disturbed land and are particularly evident along Linda Vista Road approximately 1,500 feet from the MHPA. Due to the distance from the MHPA and intervening campus development, these species are not likely to spread from this location into the MHPA. However, these species would be removed on a

project-by-project basis as part of the proposed MPU in accordance with SDMC (Chapter 14, Article 2, Division 4).

Brush Management

LUAG: *New development located adjacent to and topographically above the MHPA (e.g., along canyon edges) must be set back from slope edges to incorporate Zone 1 brush management areas on the development pad and outside the existing MHPA, while Zone 2 is considered "impact neutral" within the MHPA.*

MPU Project Compliance: The proposed MPU incorporates City requirements for brush management (SDMC §142.0412) and Landscape Standards (City 1997d). There are two projects (20 and 27) proposed adjacent to, and topographically above, the corrected MHPA (See Section 5.1.1, *Multi-habitat Planning Area*), and Zone 1 would occur entirely within the impact footprint for Project 27. Since not all of Zone 1 could occur within the impact footprint for Project 20, USD will integrate alternate compliance measures for brush management for Project 20 to avoid Zone 1 brush management impacts to the MHPA. The alternative compliance measures require a hardening of the structure and upgraded opening protection of dual glazed/dual tempered windows in addition to integrating California Building Code 7A (Materials and Construction Methods for Exterior Wildfire Exposure) into the future building as permitted in City Land Development Code Section §142.0412(i).

Zone 2 is considered "impact neutral." Impact neutral means not considered an impact (and also not considered acceptable as a mitigation area; City 2012). Specific design plans for the proposed projects adjacent to the MHPA have not been prepared; however, alternative compliance measures will be integrated, as necessary to avoid Zone 2 brush management in the City-owned MHPA.

Grading/Land Development

LUAG: *Manufactured slopes associated with site development shall be included within the development footprint for projects within or adjacent to the MHPA.*

MPU Project Compliance: While final project designs are not complete for the proposed MPU's proposed projects, each impact footprint is considered a worst-case scenario, and all manufactured slopes would be included within the proposed project boundaries (Figure 4), and no manufactured slopes would extend into the MHPA.

6.4.2.2 Area Specific Management Directives for Covered Species

Special conditions for the three MSCP Covered Species observed within the proposed MPU boundary are addressed below. Where these species occur, or may occur, in the MHPA these conditions are addressed by compliance with the MHPA LUAG (see Section 6.4.2.1, *MHPA Land Use Adjacency Guidelines*).

San Diego Barrel Cactus

Area Specific Management Directives for the San Diego barrel cactus must include measures to protect this species from edge effects, unauthorized collection, and include appropriate fire management/control practices to protect against a too frequent fire cycle. These edge effects would be addressed through adherence to all MHPA LUAG, but particularly those related to barriers and brush management (see Section 6.4.2.1, *MHPA Land Use Adjacency Guidelines*).

Coastal California Gnatcatcher

Area Specific Management Directives for the coastal California gnatcatcher must include measures to reduce edge effects and minimize disturbance during the nesting period, fire protection measures to reduce the potential for habitat degradation due to unplanned fire, and management measures to maintain or improve habitat quality including vegetation structure. No clearing of occupied habitat within the MHPA may occur between March 1 and August 15. These edge effects would be addressed through adherence to City brush management requirements (as described in Section 6.4.2.1, *MHPA Land Use Adjacency Guidelines, Brush Management*) and all other MHPA LUAG.

Cooper's Hawk

Area Specific Management Directives must include a 300-foot impact avoidance area around active Cooper's hawk nests in the MHPA. Development of projects (within 300 feet of the MHPA; Projects 20, 21, 24, 27, and 28) would be required to provide an avoidance area during construction should an active nest be present in the MHPA within 300 feet of construction (see Sections 6.3.7, *Indirect Impacts to Nesting Birds*.

Belding's Orange-throated Whiptail

Area Specific Management Directives must address edge effects to the Belding's orange-throated whiptail. Edge effects would be addressed through adherence to all MHPA LUAG (see Section 6.4.2.1, *MHPA Land Use Adjacency Guidelines*). Specifically, development of Projects 17 and 18 would construct authorized trails, which would minimize human intrusion into potential orange-throated whiptail habitat (see Section 6.3.4, *Indirect Impacts from Public Access*), and all required City brush management would be implemented (as described in Section 6.4.2.1, *MHPA Land Use Adjacency Guidelines, Brush Management*), which includes brush management adjacent to ESL (orange-throated whiptail habitat) outside the MHPA.

6.5 CUMULATIVE IMPACTS

Among the projects included in the proposed MPU are 14 proposed projects and 16 approved projects. Of the 16 approved projects (numbered 1 through 16 in Table 4), there would be no direct impacts to sensitive biological resources. Of the 14 proposed projects (numbered 17 through 30 in Table 4), only four would directly impact sensitive biological resources (Projects 17, 19 22, and 23). Combined, all 30 projects would directly impact 0.5 acre of

sensitive vegetation communities, two sensitive plant species, and five sensitive animal species as presented in Table 4.

Table 4
CUMULATIVE IMPACTS OF THE PROPOSED MASTER PLAN'S 30 PROJECTS TO SENSITIVE BIOLOGICAL RESOURCES

PROJECT NUMBER	DIEGAN COASTAL SAGE SCRUB (TIER II)	MARITIME SUCCULENT SCRUB (TIER I)	NON-NATIVE GRASSLAND (TIER IIIB)	CALIFORNIA BOXTHORN[1]	ASHY SPIKE-MOSS[1]	SAN DIEGO BARREL CACTUS[2]	COASTAL CALIFORNIA GNATCATCHER[2]	BELDING'S ORANGE-THROATED WHIPTAIL[2]	LOGGERHEAD SHRIKE[1]	COOPER'S HAWK[2]	NUTTALL'S WOODPECKER[1]
	Acres				Presence or Potential Presence (X)/Absence (--)						
1-16	--	--	--	--	--	--	--	--	--	--	--
17	<0.1[3]	--	--	--	X	--	X	X	X	X	X
18	--	--	--	--	--	--	--	--	--	--	--
19	0.1	--	--	--	X	X	X	X	X	X	X
20-21	--	--	--	--	--	--	--	--	--	--	--
22	0.3	--	--	--	X	--	X	X	X	X	X
23	0.1	--	--	--	--	--	--	--	--	--	--
24-30	--	--	--	--	--	--	--	--	--	--	--
TOTAL	**0.5**	**--**	**--**	**--**	**XXX**	**X**	**XXX**	**XXX**	**XXX**	**XXX**	**XXX**

[1]Not an MSCP Covered Species.
[2]MSCP Covered Species.
[3]Not counted in the total.

THIS PAGE INTENTIONALLY LEFT BLANK

The MSCP was designed to compensate for the cumulative loss of biological resources throughout the San Diego region. Projects that conform to the MSCP as specified by the City's Subarea Plan and implementing ordinances, (i.e., Biology Guidelines and ESL Regulations) are not expected to result in a significant cumulative impact for those biological resources adequately covered by the MSCP. These resources include the vegetation communities identified as Tier I through IV and MSCP Covered Species (City 2012).

The MPU would comply with the City's Subarea Plan by complying with the MHPA LUAGs and Area Specific Management Directives for Covered Species (see Section 6.4.2, *MSCP Consistency*) and by mitigating for significant impacts in accordance with ESL Regulations and the City's Biology Guidelines (see Section 7.0, *Mitigation Program*). Other projects in the City would also be required to comply with the City's Subarea Plan.

7.0 MITIGATION PROGRAM

The Mitigation Program includes a proposed plan of action to reduce significant impacts to below a level of significance. The Mitigation Program consists of three required elements: (1) Mitigation Element; (2) Protection and Notice Element; and (3) Management Element. The mitigation ratios used in this report follow the City's ESL Regulations Tier system for impacts to sensitive upland vegetation communities as outlined in the City's Biology Guidelines.

7.1 MITIGATION ELEMENT

The Mitigation Element includes actions to help sustain the viability and persistence of biological resources. Mitigation for significant impacts associated with implementation of the proposed MPU would consist of compensation for significant sensitive vegetation community impacts based on the location of the impacts and the location of the proposed mitigation.

7.1.1 Mitigation for Direct Impacts to Sensitive Vegetation Communities

Mitigation for impacts associated with Projects 17, 19, 22 and 23 to 0.5 acre of Tier II Diegan coastal sage scrub would be accomplished through payment into the HAF. Payment into the HAF will equal 0.5 acre of Diegan coastal sage scrub (1:1 ratio). This is described further in BIO-1.

Payment in the HAF is appropriate because the total impact would be less than five acres; the areas where these impacts would occur are surrounded by development and isolated from the MHPA; and they have low, long-term conservation value. Mitigation also will be provided to avoid and minimize indirect impacts to sensitive vegetation communities located adjacent to the project areas. These measures are described below in BIO-2.

BIO-1 Impacts to 0.5 acre of Diegan coastal sage scrub shall be mitigated at a ratio of 1:1 pursuant to Table 3, *Upland Mitigation Ratios*, in the City's Biology Guidelines (City 2012) for impacts outside the MHPA and mitigation inside the MHPA. Mitigation shall be accomplished via payment in to the City's Habitat Acquisition Fund equal to 0.5 acre of habitat.

BIO-2 BIOLOGICAL RESOURCE PROTECTION DURING CONSTRUCTION

I. Prior to Construction

A. **Biologist Verification** – The owner/permittee shall provide a letter to the City's Mitigation Monitoring Coordination (MMC) section stating that a Project Biologist (Qualified Biologist) as defined in the City of San Diego's Biological Guidelines (2012), has been retained to implement the project's biological monitoring program. The letter shall include the names and contact information of all persons involved in the biological monitoring of the project.

B. **Preconstruction Meeting** – The Qualified Biologist shall attend the preconstruction meeting, discuss the project's biological monitoring program, and arrange to perform any follow up mitigation measures and reporting including site-specific monitoring, restoration or revegetation, and additional fauna/flora surveys/salvage.

C. **Biological Documents** – The Qualified Biologist shall submit all required documentation to MMC verifying that any special mitigation reports including but not limited to, maps, plans, surveys, survey timelines, or buffers are completed or scheduled per City Biology Guidelines, MSCP, ESL, project permit conditions; CEQA; endangered species acts; and/or other local, state or federal requirements.

D. **BCME** – The Qualified Biologist shall present a Biological Construction Mitigation/Monitoring Exhibit (BCME) which includes the biological documents in C above. In addition, include: restoration/revegetation plans, plant salvage/relocation requirements (e.g., coastal cactus wren plant salvage, burrowing owl exclusions, etc.), avian or other wildlife surveys/survey schedules (including general avian nesting and USFWS protocol), timing of surveys, wetland buffers, avian construction avoidance areas/noise buffers/ barriers, other impact avoidance areas, and any subsequent requirements determined by the Qualified Biologist and the City ADD/MMC. The BCME shall include a site plan, written and graphic depiction of the project's biological mitigation/monitoring program, and a schedule. The BCME shall be approved by MMC and referenced in the construction documents.

E. **Resource Delineation** – Prior to construction activities, the Qualified Biologist shall supervise the placement of orange construction fencing or equivalent along the limits of disturbance adjacent to sensitive biological habitats and verify compliance with any other project conditions as shown on the BCME. This phase shall include flagging plant specimens and delimiting buffers to protect sensitive biological resources (e.g.,

habitats/flora & fauna species, including nesting birds) during construction. Appropriate steps/care should be taken to minimize attraction of nest predators to the site.

F. **Education** – Prior to commencement of construction activities, the Qualified Biologist shall meet with the owner/permittee or designee and the construction crew and conduct an on-site educational session regarding the need to avoid impacts outside of the approved construction area and to protect sensitive flora and fauna (e.g., explain the avian and wetland buffers, flag system for removal of invasive species or retention of sensitive plants, and clarify acceptable access routes/methods and staging areas, etc.).

II. During Construction

A. **Monitoring** – All construction (including access/staging areas) shall be restricted to areas previously identified, proposed for development/staging, or previously disturbed as shown on "Exhibit A" and/or the BCME. The Qualified Biologist shall monitor construction activities as needed to ensure that construction activities do not encroach into biologically sensitive areas, or cause other similar damage, and that the work plan has been amended to accommodate any sensitive species located during the pre-construction surveys. In addition, the Qualified Biologist shall document field activity via the Consultant Site Visit Record (CSVR). The CSVR shall be e-mailed to MMC on the first day of monitoring, the 1st week of each month, the last day of monitoring, and immediately in the case of any undocumented condition or discovery.

B. **Subsequent Resource Identification** – The Qualified Biologist shall note/act to prevent any new disturbances to habitat, flora, and/or fauna onsite (e.g., flag plant specimens for avoidance during access, etc.). If active nests or other previously unknown sensitive resources are detected, all project activities that directly impact the resource shall be delayed until species specific local, state or federal regulations have been determined and applied by the Qualified Biologist.

III. Post Construction Measures

A. In the event that impacts exceed previously allowed amounts, additional impacts shall be mitigated in accordance with City Biology Guidelines, ESL and MSCP, State CEQA, and other applicable local, state and federal law. The Qualified Biologist shall submit a final BCME/report to the satisfaction of the City ADD/MMC within 30 days of construction completion.

7.1.2 Mitigation for Indirect Impacts to Cooper's Hawk

Implementation of Mitigation Measure BIO-3 would avoid indirect impacts to Cooper's hawk nesting in the MHPA and satisfy the Area Specific Management Directive identified in the MSCP subarea plan for the species. Mitigation Measure BIO-3 for the Cooper's hawk would apply to Projects 20, 21, 24, 27, and 28.

BIO-3 To avoid impacts to Cooper's hawk, removal of habitat that supports active nests in the proposed area of disturbance should occur outside of the breeding season for this species (February 1 to September 15).

If removal of habitat within 300 feet of the MHPA (Projects 20, 21, 24, 27, and 28) must occur during the breeding season (February 1 to September 15), the Qualified Biologist shall conduct a pre-construction survey to determine the presence or absence of nesting Cooper's hawk within the proposed area of disturbance. The pre-construction (precon) survey shall be conducted within 10 calendar days prior to the start of construction activities (including removal of vegetation). The applicant shall submit the results of the precon survey to City DSD for review and approval prior to initiating any construction activities.

If nesting Cooper's hawk are detected, a letter report or mitigation plan in conformance with the City's Biology Guidelines and applicable State and Federal Law (i.e. appropriate follow up surveys, monitoring schedules, construction and noise barriers/buffers, etc.) shall be prepared and include proposed measures to be implemented to ensure that take of birds or eggs or disturbance of breeding activities is avoided. The report or mitigation plan will include the establishment of a 300-foot construction avoidance area that shall be maintained around any active Cooper's hawk nest located inside the MHPA until the nest is no longer active as determined by the Qualified Biologist. The report or plan shall be submitted to the City DSD for review and approval and implemented to the satisfaction of the City. The City's MMC Section and Biologist shall verify and approve that all measures identified in the report or mitigation plan are in place prior to and/or during construction. If nesting Cooper's hawk are not detected during the precon survey, no further mitigation is required.

7.2 PROTECTION AND NOTICE ELEMENT

The Mitigation Program shall provide assurances that mitigation areas are adequately protected from future development. Mitigation for the proposed MPU would include payment into the City's Habitat Acquisition Fund (see BIO-1). Any mitigation area acquired by the City with those funds would be added to, or conserved, in the MHPA thereby assuring adequate protection from future development.

Furthermore, in lieu of dedication in fee title, or granting of a conservation easement, where a project has utilized all of its development area potential as allowed under the OR-1-2 Zone, then as a condition of permit approval, a covenant of easement shall be required to be recorded against the title of the property for the remainder area, with the USFWS and the CDFW named as third party beneficiaries. A covenant of easement (COE) is a legally binding promise made by the property owner with respect to future use of the land. Identification of those permissible passive activities and other conditions of the permit would be incorporated into the covenant. The covenant would be recorded against the title of the property and would run with the land. The applicant will allow the City limited right of entry to the remainder area to monitor the applicant's management of the area in perpetuity. The COE requirement will be enforced via standard conditions of the permit for this MPU project (PTS No. 417090).

7.3 MANAGEMENT ELEMENT

The Mitigation Program must provide assurances that the mitigation will be adequately managed and monitored in a manner consistent with Section 1.5, *Preserve Management*, of the City's MSCP Subarea Plan. Since any mitigation area acquired by the City with habitat acquisition funds would be added to the MHPA, it would be adequately managed and monitored in a manner consistent with Section 1.5, *Preserve Management*, of the City's MSCP Subarea Plan.

8.0 ACKNOWLEDGEMENTS

The following people contributed to the preparation of this report:

Kim Baranek[1]	M.A., Geography, San Diego State University, 1992 B.A., Environmental Studies and Geography, University of California, Santa Barbara, 1986
Deborah Clayton[3,5]	B.A., Resource/Environmental Geography, San Diego State University, 1990
Camille Lill[4]	M.A., Spatial Information Science, University of Adelaide, Australia, 2003 B.A., Geography, University of Oregon, 2000
Aleksandra Richards[2]	M.A., International Relations, University of San Diego, 2010 B.A., Communications, Emphasis in Print Journalism, California State University Fullerton, 2008
W. Larry Sward[3]	M.S., Biology, with an emphasis in Botany, San Diego State University, 1979 B.S., Biology, with an emphasis in Ecology, San Diego State University, 1975

[1] Project Manager; [2] Technical Editor; [3] Biologist; [4] GIS Specialist; [5] Primary Author

9.0 REFERENCES

American Ornithologists' Union. 2015. AOU Checklist of North and Middle American Birds (7th Edition and Supplements). http://www.americanornithology.org/content/aou-checklist-north-and-middle-american-birds-7th-edition-and-supplements

Baker, R.J., L.C. Bradley, R.D. Bradley, J.W. Dragoo, M.D. Engstrom, R.S. Hoffmann, C.A. Jones, F. Reid, D.W. Rice, and C. Jones. 2003. Revised checklist of North American mammals north of Mexico. Occasional Papers of the Museum, Texas Tech University 223.

Baldwin, B.G., D.H. Goldman, D.J. Keil, R. Patterson, T.J. Rosatti, and D.H. Wilken, editors. 2012. The Jepson Manual: Vascular Plants of California, second edition. University of California Press, Berkeley.

Beauchamp, R.M. 1986. *A Flora of San Diego County, California*. Sweetwater Press, National City, California, 241 pp.

California Department of Fish and Wildlife. 2015. Special Animals List. Periodic publication. 51 pp. http://www.dfg.ca.gov/biogeodata/cnddb/pdfs/SPAnimals.pdf

California Invasive Plant Council. 2015a. Invasive Plants of California's Wildland, *Arundo donax*. http://www.cal-ipc.org/ip/management/ipcw/pages/detailreport.cfm@usernumber=8&surveynumber=182.php

2015b. Invasive Plants of California's Wildland, *Cortaderia selloana*. http://www.cal-ipc.org/ip/management/ipcw/pages/detailreport.cfm@usernumber=35&surveynumber=182.php

2015c. Invasive Plants of California's Wildland, *Pennisetum setaceum*. http://www.cal-ipc.org/ip/management/ipcw/pages/detailreport.cfm@usernumber=66&surveynumber=182.php

California Native Plant Society, Rare Plant Program. 2015. Inventory of Rare and Endangered Plants (online edition, v8-02). California Native Plant Society, Sacramento, CA. http://www.rareplants.cnps.org

City of San Diego. 2012. San Diego Municipal Code, Land Development Code, Biology Guidelines. Last amended April 23.

1997a. Multiple Species Conservation Program. City of San Diego MSCP Subarea Plan. March.

1997b. Declaration of Restrictions. Signed August 6. Recorded as Document Number 1997-0634035, December 15, 1997.

City of San Diego (cont.)

1997c. City of San Diego MSCP Implementing Agreement Documents

1997d. San Diego Municipal Code Land Development Code Landscape Standards. Adopted November 18. http://www.sandiego.gov/development-services/pdf/industry/standards09.pdf

1996. University of San Diego Master Plan Environmental Impact Report. DEP No. 92-0568 SCH No. 93121032. Final Report July 17.

Collins, J.T. and T.W. Taggart. 2009. Standard Common and Current Scientific Names for North American Amphibians, Turtles, Reptiles, and Crocodilians (6th Edition). Publication of The Center for North American Herpetology, Lawrence, Kansas. iv + 44 pp.

Environmental Laboratory. 1987. Corps of Engineers Wetlands Delineation Manual. Technical Report Y-87-1. U.S. Army Engineer Waterways Experiment Station, Vicksburg, Mississippi. 100 pp. with Appendices.

Holland, R.F. 1986. Preliminary Descriptions of the Terrestrial Natural Communities of California. Nongame-Heritage Program, State of California, Department of Fish and Game, Sacramento, 156 pp.

Jackson, L. 1985. Ecological origins of California's Mediterranean grasses. *Journal of Biogeography* 12: 349-361.

Keeley, J. and S. Keeley. 1988. Chaparral. North American Vegetation. Eds. M. Barbour and W. Billings. Cambridge University Press, pp. 165-207.

Kettler Leweck Engineering. 2016. Preliminary Drainage Report University of San Diego 2015 Master Plan. August 22.

Lettieri-McIntyre and Associates, Inc. 1996. Biological Resources Report for the University of San Diego Master Plan. March.

MW Steele. 2015. University of San Diego Master Plan Update. November.

Nationwide Environmental Title Research, LLC. 2016. Historic Aerials. http://www.historicaerials.com/

Oberbauer, Thomas, Meghan Kelly, and Jeremy Buegge. March 2008. Draft Vegetation Communities of San Diego County. Based on “Preliminary Descriptions of the Terrestrial Natural Communities of California,” Robert F. Holland, Ph.D., October 1986.

Rebman, Jon P. and Michael G. Simpson. 2006. Checklist of the Vascular Plants of San Diego County. 4th Edition. San Diego Natural History Museum, San Diego, California. 100 pp.

Reiser, C. H. 2001. *Rare Plants of San Diego County*. Aquafir Press, Imperial Beach, California.

Unitt, Philip. 2004. *San Diego County Bird Atlas*. Proceedings of the San Diego Society of Natural History. No. 39, October 31.

University of San Diego. 2015. Community Standards 2015-2016. https://www.sandiego.edu/residentiallife/documents/Community%20Standards%202015-16%20FINALdocx.pdf

U.S. Army Corps of Engineers (USACE). 2008. Regional Supplement to the Corps of Engineers Wetland Delineation Manual: Arid West Region (Version 2.0). Eds. J.S. Wakely, R.W. Lichvar, and C.V. Noble. ERDC/EL TR-08-28. Vicksburg, MS: U.S. Army Engineer Research and Development Center.

U.S. Department of Agriculture Natural Resources Conservation Service. 2015. Soil Survey Geographic Database (SSURGO).

THIS PAGE INTENTIONALLY LEFT BLANK

Appendix A

DECLARATION OF RESTRICTIONS

DOC # 1997-0634035

1083 DEC 15, 1997 1:54 PM

OFFICIAL RECORDS
SAN DIEGO COUNTY RECORDER'S OFFICE
GREGORY J. SMITH, COUNTY RECORDER
FEES: 70.00

Recording Requested by:
CITY OF SAN DIEGO
When recorded Return to and
Mail Tax Statements to:

CITY OF SAN DIEGO
DEVELOPMENT SRVS DEPT
CITY OPERATIONS BLDG
1222 FIRST AVE MS 501
SAN DIEGO CA 92101

SPACE ABOVE THIS LINE FOR RECORDER'S USE

DECLARATION OF RESTRICTIONS

This DECLARATION OF RESTRICTIONS made this sixth day of August, 1997, by The University of San Diego, a Not-for-Profit California Corporation, hereinafter referred to as "Declarant."

WHEREAS, Declarant is the owner of a certain parcel of land (hereinafter referred to as "the Property") described in the document attached hereto, labeled as Exhibit A and incorporated herein by this reference which was the subject of Conditional Use and Resource Protection Ordinance (CUP/RPO) Permit No. 92-0568, approved by the City of San Diego on October 29, 1996; and

WHEREAS, as a condition of approval for CUP/RPO Permit No. 92-0568, Declarant was required to protect and preserve certain sensitive biological and hillside resources of the Property not being impacted by the development proposals contained in CUP/RPO Permit No. 92-0568 (hereinafter referred to as "the Preservation Segments"). The Preservation Segments are generally depicted on the map attached hereto, labeled as Exhibit B and incorporated herein by this reference; NOW, THEREFORE

Declarant declares that the Preservation Segments shall be held, transferred, encumbered, used, sold, conveyed, leased, and occupied, subject to the covenants and restrictions hereinafter set forth expressly and exclusively for the use and benefit of the Property and of each and every person or entity who now or in the future owns any portion of the Property.

1. Except as provided for in CUP/RPO No. 92-0568 and unless or until CUP/RPO No. 92-0568 is amended by action of the Council of the City of San Diego to change the scope of of allowable uses within the Preservation Segments, Declarant covenants to retain the sensitive biological resources within the Preservation Segments in a natural condition and take necessary affirmative actions to preclude any use of the Preservation Segment, including any building, grading, improvements or development that will significantly impair or interfere with the biological and hillside resource value of the Preservation Segments.

ORIGINAL

2. Declarant shall retain the right for itself, and to its personal representatives, heirs, successors, and assigns, all rights accruing from its ownership of the Preservation Segments, including the right to engage in or permit or invite others to engage in all uses of the Preservation Segments that are not inconsistent with the restrictions set forth above in paragraph 1.

3. In addition to those rights set forth above in paragraph 2, Declarant shall specifically retain the right for itself, and to its personal representatives, heirs, successors, and assigns to seek an amendment to CUP/RPO Permit No. 92-0568 from the Council of the City of San Diego to modify the scope of or permitted uses within the Preservation Segments. If any amendment to CUP/RPO Permit No. 92-0568 is approved by the Council of the City of San Diego which modifies the scope of or allowable uses within the Preservation Segments, this Declaration of Restrictions shall be rescinded and re-recorded in accordance with said amendment.

IN WITNESS WHEREOF, Declarant has executed this Declaration of Restrictions the day and year first above written.

Declarant:

University of San Diego

By: Alice B Hayes
President

ORIGINAL

1085

CALIFORNIA ALL-PURPOSE ACKNOWLEDGMENT

State of California

County of San Diego

On August 6, 1997 (Date) before me, Elizabeth Macias, Notary Public (Name and Title of Officer (e.g., "Jane Doe, Notary Public")).

personally appeared Alice B. Hayes, President, University of San Diego (Name(s) of Signer(s)).

☐ personally known to me – OR – ☑ proved to me on the basis of satisfactory evidence to be the person(s) whose name(s) is/are subscribed to the within instrument and acknowledged to me that he/she/they executed the same in his/her/their authorized capacity(ies), and that by his/her/their signature(s) on the instrument the person(s), or the entity upon behalf of which the person(s) acted, executed the instrument.

ELIZABETH MACIAS
Commission # 1036326
Notary Public — California
San Diego County
My Comm. Expires Sep 11, 1998

WITNESS my hand and official seal.

Elizabeth Macias
Signature of Notary Public

OPTIONAL

Though the information below is not required by law, it may prove valuable to persons relying on the document and could prevent fraudulent removal and reattachment of this form to another document.

Description of Attached Document

Title or Type of Document: Resolution Number R-287982/Declaration of Restrictions

Document Date: August 6, 1997 Number of Pages: 9

Signer(s) Other Than Named Above: None.

Capacity(ies) Claimed by Signer(s)

Signer's Name: Alice B. Hayes

☐ Individual
☒ Corporate Officer
Title(s): President
☐ Partner — ☐ Limited ☐ General
☐ Attorney-in-Fact
☐ Trustee
☐ Guardian or Conservator
☐ Other:

RIGHT THUMBPRINT OF SIGNER
Top of thumb here

Signer Is Representing:

University of San Diego

Signer's Name:

☐ Individual
☐ Corporate Officer
Title(s):
☐ Partner — ☐ Limited ☐ General
☐ Attorney-in-Fact
☐ Trustee
☐ Guardian or Conservator
☐ Other:

RIGHT THUMBPRINT OF SIGNER
Top of thumb here

Signer Is Representing:

© 1995 National Notary Association • 8236 Remmet Ave., P.O. Box 7184 • Canoga Park, CA 91309-7184 Prod. No. 5907 Reorder: Call Toll-Free 1-800-876-6827

The lands contained within the Declaration of Restrictions are owned by the University of San Diego, addressed as 5998 Alcala Park, and legally described as follows:

Pueblo Lots 287, 288, 294-296, Portions of Pueblo Lots 267, 286, 289, 292, 293 and 297; Blocks 22 and 23, portions of Blocks 20 and 25 and Lots 1-3, Block A, Silver Terrace Map No. 434; Parcels A and B of Parcel Map No. 319 and Parcels 1 and 2 of Parcel Map 7526 located in the R1-5000, R1-15000, R-3000, R-1000 and C Zones.

EXHIBIT A

ORIGINAL

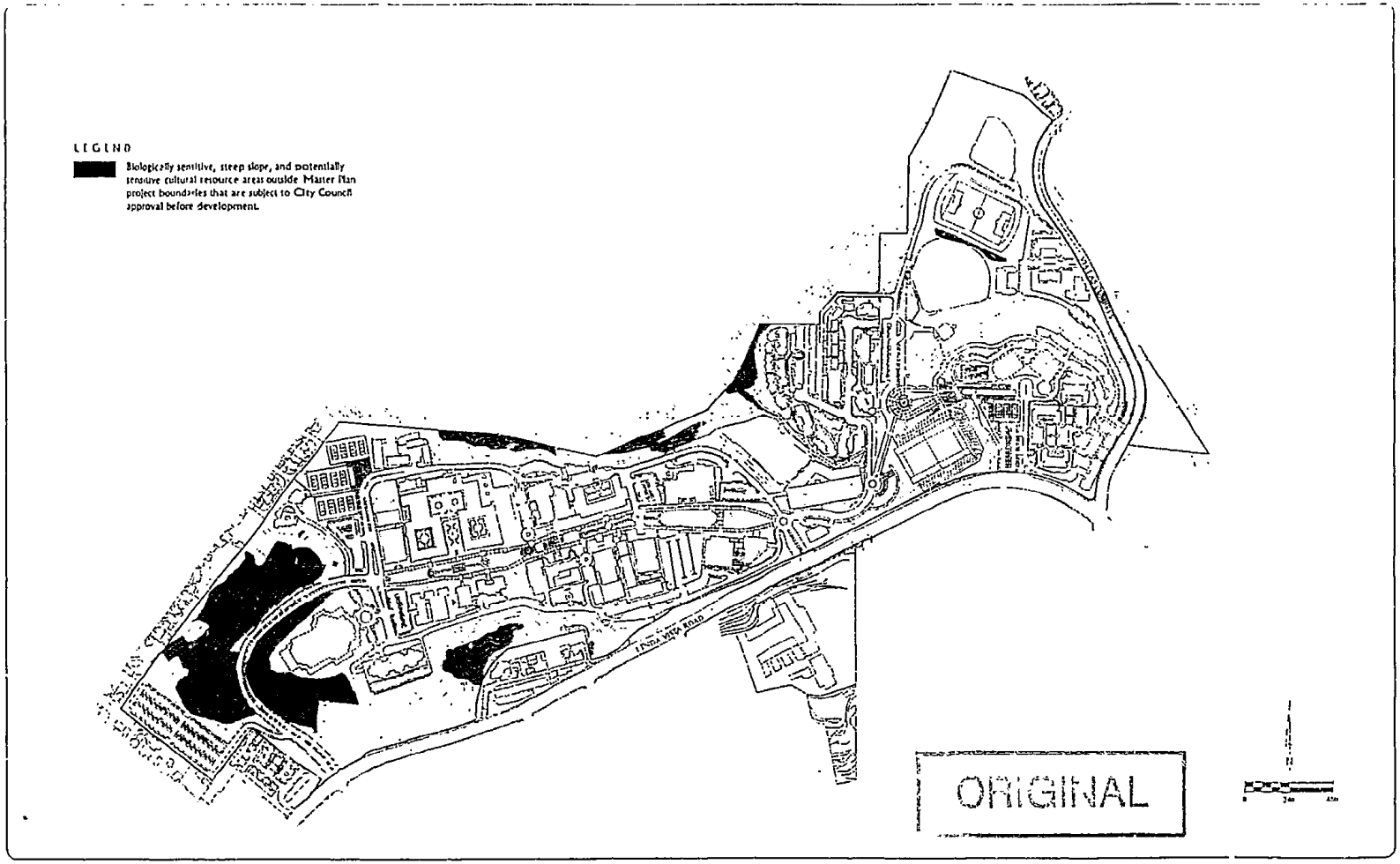

University of San Diego
Alcala Park
San Diego, California

RESOURCE PRESERVATION/
DECLARATION OF RESTRICTION

0.7

EXHIBIT "B"

1088

DEED RESTRICTION AREAS
UNIVERSITY OF SAN DIEGO

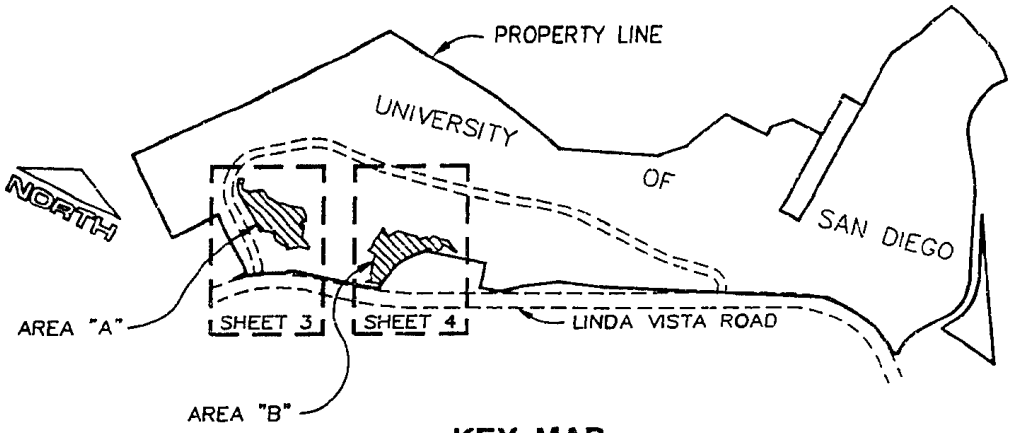

KEY MAP
NO SCALE

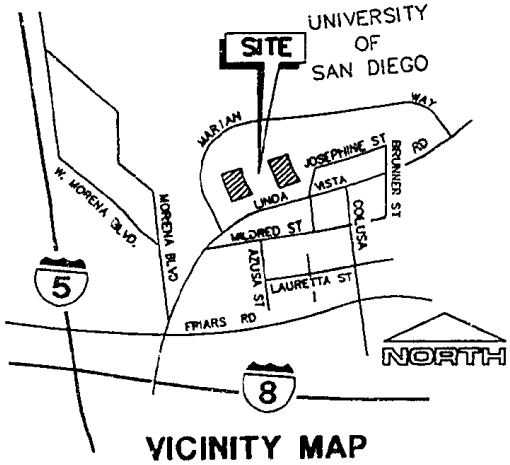

VICINITY MAP
NO SCALE

LEGEND

PROPERTY LINE .....

EXISTING ROADS .....

SENSITIVE BIOLOGY AREA .....

ORIGINAL

Kimley-Horn and Associates, Inc.
Engineering, Planning and Environmental Consultants
517 Fourth Avenue • Suite 201 • San Diego, Ca. • 92101
Tel. (619) 234-9411 • Fax. (619) 234-9433

EXHIBIT "B"

1089

DATA TABLE AREA "A"		
LINE	BEARING	DISTANCE
A1	N01°54'06"E	300.56'
A2	N14°41'03"W	47.33'
A3	N41°22'44"W	65.29'
A4	N58°40'00"W	69.21'
A5	N54°34'11"W	175.85'
A6	N59°16'02"W	57.14'
A7	N65°10'04"E	61.95'
A8	N87°05'56"E	33.67'
A9	N45°44'26"W	56.48'
A10	N85°15'15"W	79.45'
A11	N59°32'03"W	27.64'
A12	N49°50'58"E	84.58'
A13	N76°03'12"E	68.26'
A14	N17°29'27"W	24.38'
A15	N73°31'04"W	69.25'
A16	N29°07'57"W	39.68'
A17	N17°32'55"W	58.64'
A18	N80°13'36"E	23.94'
A19	N17°52'51"W	20.09'
A20	N56°38'01"E	36.13'
A21	N28°36'40"W	25.16'
A22	N50°34'51"W	73.99'
A23	N75°20'00"E	95.75'
A24	N83°10'24"W	23.06'
A25	N74°33'42"E	68.68'
A26	N79°05'33"W	35.80'
A27	N88°21'10"E	31.85'
A28	N60°40'42"W	40.26'
A29	N85°36'46"E	30.68'
A30	N50°58'07"E	75.34'
A31	N84°19'38"E	54.66'
A32	N49°55'38"W	21.02'
A33	N12°27'21"W	60.28'
A34	N63°42'57"E	38.96'

DATA TABLE AREA "B"		
LINE	BEARING	DISTANCE
B1	N72°13'49"E	109.41'
B2	N35°09'48"E	47.15'
B3	N43°47'59"W	43.19'
B4	N03°52'39"W	38.58'
B5	N28°29'57"W	22.65'
B6	N11°28'26"W	36.55'
B7	N09°43'28"W	47.23'
B8	N89°03'59"W	59.46'
B9	N07°34'38"W	18.65'
B10	N57°10'37"E	20.08'
B11	N11°34'28"W	50.44'
B12	N09°38'59"E	49.17'
B13	N02°19'38"E	64.44'
B14	N58°21'30"W	71.87'
B15	N29°35'42"E	56.06'
B16	N44°55'49"E	23.92'
B17	N76°24'55"E	45.42'
B18	N86°48'07"E	46.76'
B19	N69°45'55"E	43.49'
B20	N72°12'52"W	35.16'
B21	N38°30'56"E	26.37'
B22	N54°05'31"E	24.94'
B23	N46°23'48"W	25.36'
B24	N10°25'51"E	46.63'
B25	N82°24'41"E	27.51'
B26	N88°18'26"E	44.19'
B27	N75°52'52"E	46.49'
B28	N59°04'41"W	60.09'
B29	N76°33'22"W	40.76'
B30	N09°53'34"E	11.42'
B31	N87°28'23"W	31.88'
B32	N72°17'16"W	40.76'
B33	N88°04'38"E	40.35'
B34	N18°15'34"W	30.32'
B35	N33°10'02"E	35.24'
B36	N10°47'49"E	14.86'
B37	N75°26'42"E	84.15'

DATA TABLE AREA "B"			
CURVE	DELTA	RADIUS	LENGTH
C1	09°46'39"	500.00'	85.33'
C2	36°36'38"	500.00'	319.49'

ORIGINAL

EXHIBIT "B"

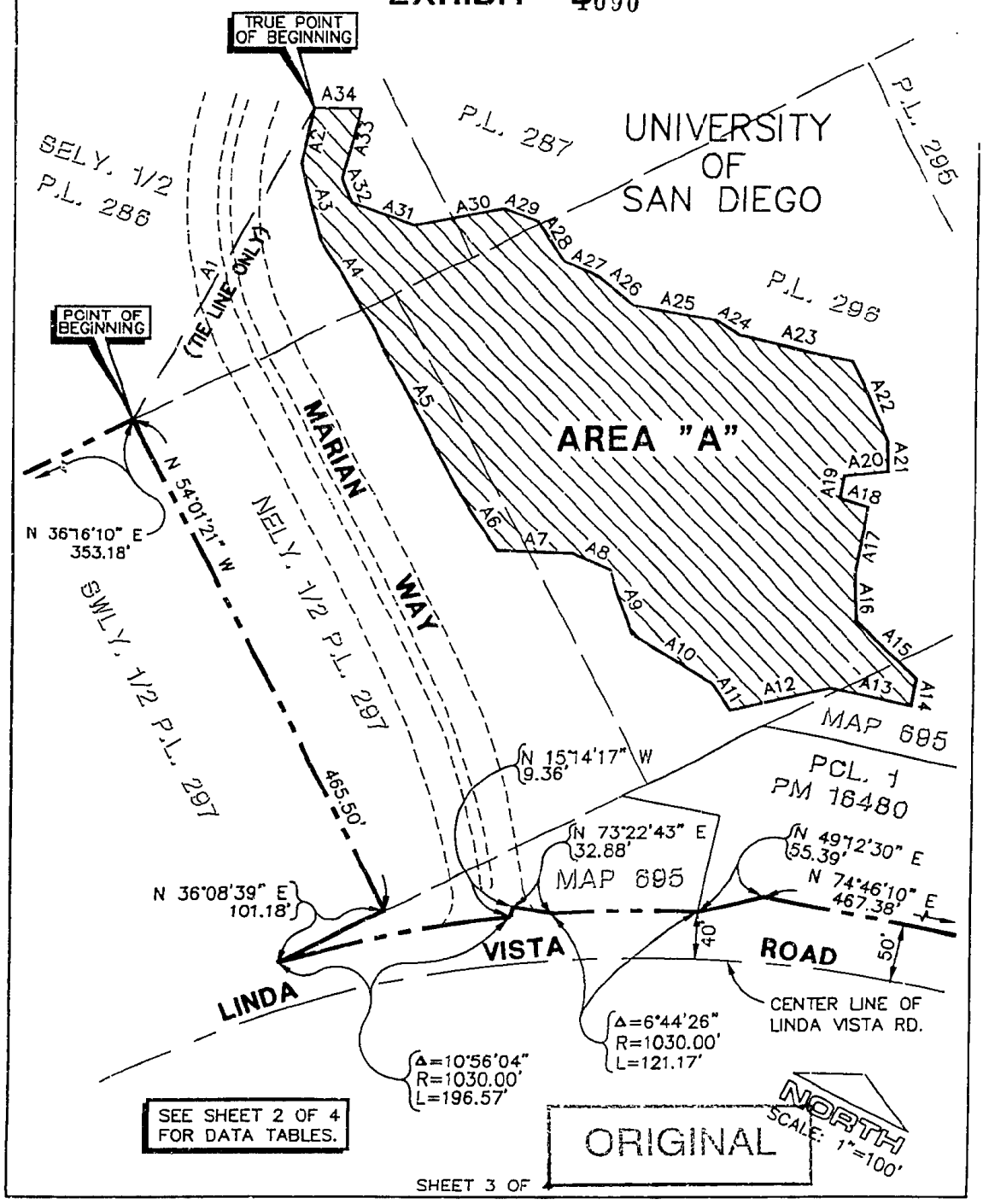

SHEET 3 OF

EXHIBIT "B"

1091

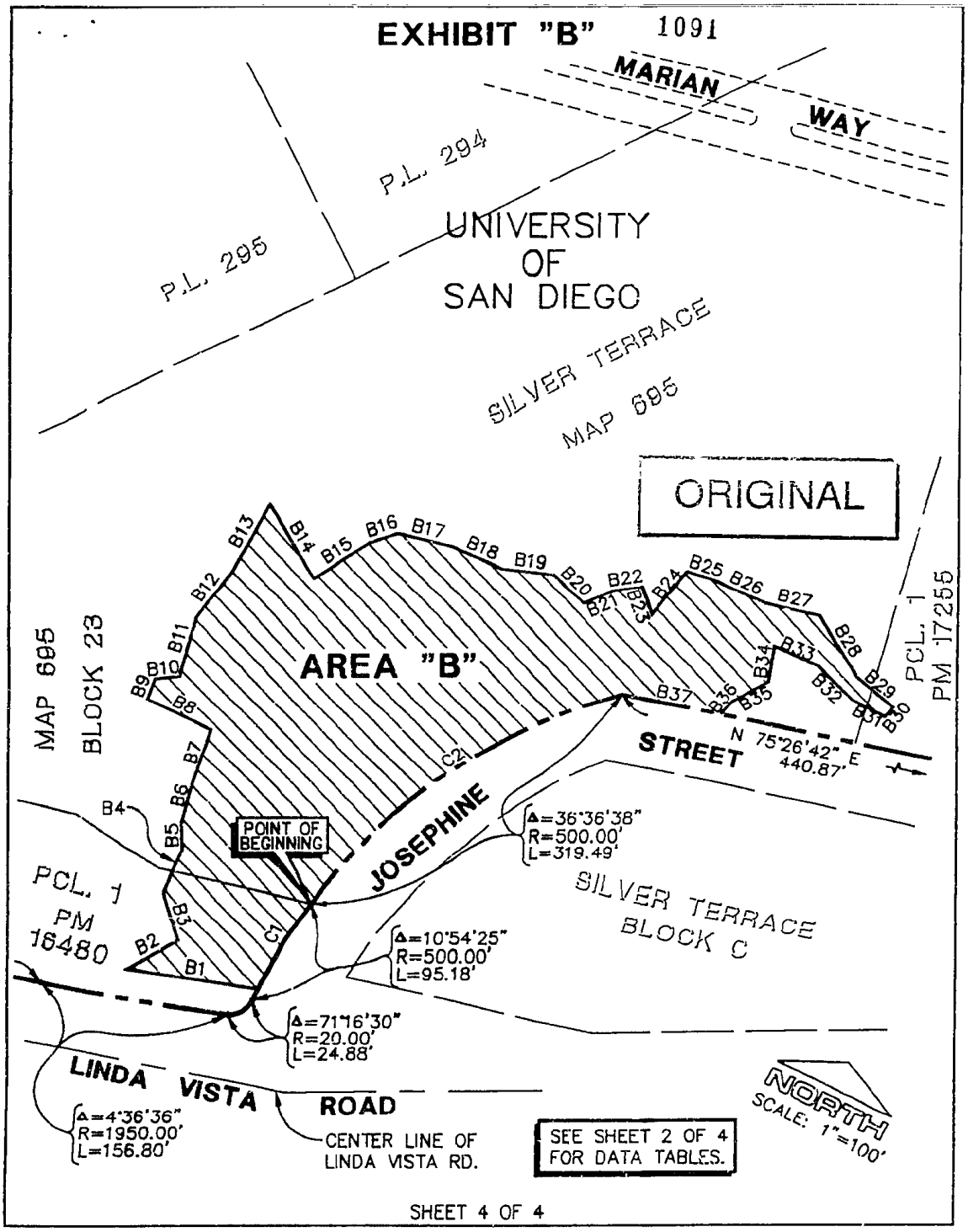

SHEET 4 OF 4

THOSE PORTIONS OF PUEBLO LOTS 286, 287, 296 AND 297 OF THE PUEBLO LANDS OF SAN DIEGO ACCORDING TO MISCELLANEOUS MAP NO. 36 ON FILE IN THE OFFICE OF THE COUNTY RECORDER, TOGETHER WITH A PORTION OF SILVER TERRACE ACCORDING TO AMENDED MAP THEREOF NO. 695 ON FILE IN THE OFFICE OF THE COUNTY RECORDER, TOGETHER WITH A PORTION OF PARCEL 1 OF PARCEL MAP NO. 16480 ON FILE IN THE OFFICE OF THE COUNTY RECORDER, TOGETHER WITH A PORTION OF PARCEL 1 OF PARCEL MAP NO. 17255 ON FILE IN THE OFFICE OF THE COUNTY RECORDER, ALL IN THE CITY OF SAN DIEGO, COUNTY OF SAN DIEGO, STATE OF CALIFORNIA, DESCRIBED AS FOLLOWS:

AREA "A"

BEGINNING AT THE MOST NORTHERLY CORNER OF THE SOUTHWESTERLY ONE-HALF OF SAID PUEBLO LOT 297, FROM WHICH THE MOST EASTERLY CORNER OF THE SOUTHWESTERLY ONE-HALF OF SAID PUEBLO LOT 297 BEARS SOUTH 54°01'21" EAST, THENCE NORTH 01°54'06" EAST 300.56 FEET TO THE TRUE POINT OF BEGINNING,
THENCE SOUTH 14°41'03" EAST 47.33 FEET; THENCE SOUTH 41°22'44" EAST 65 29 FEET, THENCE SOUTH 58°40'00" EAST 69.21 FEET; THENCE SOUTH 54°34'11" EAST 175.85 FEET, THENCE SOUTH 59°16'02" EAST 57.14 FEET; THENCE NORTH 65°10'04" EAST 61.95 FEET, THENCE NORTH 87°05'56" EAST 33 67 FEET, THENCE SOUTH 45°44'26" EAST 56.48 FEET, THENCE SOUTH 85° 15'15" EAST 79 45 FEET; THENCE SOUTH 59°32'05" EAST 27.64 FEET, THENCE NORTH 49°50'58" EAST 84.58 FEET, THENCE NORTH 76°03'12" EAST 68.26 FEET; THENCE NORTH 17°29'27" WEST 24.38 FEET; THENCE NORTH 73°31'04" WEST 69.25 FEET, THENCE NORTH 29°07'57" WEST 39.68 FEET; THENCE NORTH 17°32'55" WEST 58.64 FEET, THENCE SOUTH 80°13'36" WEST 23.94 FEET, THENCE NORTH 17°52'51" WEST 20.09 FEET, THENCE NORTH 56°38'01" EAST 36.13 FEET; THENCE NORTH 28°36'40" WEST 25.16 FEET, THENCE NORTH 50°34'51" WEST 73 99 FEET; THENCE SOUTH 75°20'00" WEST 95.75 FEET, THENCE NORTH 83°10'24" WEST 23 06 FEET; THENCE SOUTH 74°33'42" WEST 68.68 FEET, THENCE NORTH 79°05'33" WEST 35.80 FEET; THENCE SOUTH 88°21'10" WEST 31.85 FEET, THENCE NORTH 60°40'42" WEST 40 26 FEET; THENCE SOUTH 85°36'46" WEST 30.68 FEET, THENCE SOUTH 50°58'07" WEST 75.34 FEET, THENCE SOUTH 84°19'38" WEST 54.66 FEET, THENCE NORTH 49°55'38" WEST 21.02 FEET, THENCE NORTH 12°27'21" WEST 60.28 FEET, THENCE SOUTH 63°42'57" WEST 38.96 FEET TO THE TRUE POINT OF BEGINNING.

CONTAINING 2.59 ACRES MORE OR LESS

AREA "B"

BEGINNING AT THE NORTHEASTERLY CORNER OF SAID PARCEL 1 OF PARCLE MAP NO 16480, THENCE ALONG THE EASTERLY LINE OF SAID PARCEL 1 BEING IN THE ARC OF A 500 00 FOOT RADIUS CURVE CONCAVE SOUTHEASTERLY, 85.33 FEET THROUGH A CENTRAL ANGLE OF 9°46'39" ; THENCE LEAVING SAID EASTERLY LINE, SOUTH 72°13'49" WEST 109 41 FEET, THENCE NORTH 35°09'48" EAST 47.15 FEET, THENCE NORTH 43°47'59" WEST 43 19 FEET, THENCE NORTH 03°52'39" WEST 38.58 FEET, THENCE NORTH 28°29'57" WEST 22.65 FEET, THENCE NORTH 11°28'26" WEST 36.55 FEET, THENCE NORTH 09°43'28" WEST 47.23 FEET, THENCE NORTH 89°03'59" WEST 59.46 FEET, THENCE NORTH 07°34'38" WEST 18.65 FEET, THENCE NORTH 57°10'37" EAST 20.08 FEET, THENCE NORTH 11°34'28" WEST 50.44 FEET,

ORIGINAL

THENCE NORTH 09°38'59" EAST 49.17 FEET, THENCE NORTH 02°19'38" EAST 64 44 FEET, THENCE SOUTH 58°21'30" EAST 71 87 FEET, THENCE NORTH 29°35'42" EAST 56 06 FEET, THENCE NORTH 44°55'49" EAST 23.92 FEET, THENCE NORTH 76°24'55" EAST 45 42 FEET, THENCE NORTH 86°48'07" EAST 46.76 FEET, THENCE NORTH 69°45'55" EAST 43 49 FEET, THENCE SOUTH 72°12'52" EAST 35 16 FEET, THENCE NORTH 38°30'56" EAST 26 37 FEET, THENCE NORTH 54°05'31" EAST 24 94 FEET, THENCE SOUTH 46°23'48" EAST 25 36 FEET, THENCE NORTH 10°25'51" EAST 46.63 FEET, THENCE NORTH 82°24'41" EAST 27 51 FEET, THENCE NORTH 88°18'26" EAST 44.19 FEET, THENCE NORTH 75°52'52" EAST 46 49 FEET, THENCE SOUTH 59°04'41" EAST 60.09 FEET, THENCE SOUTH 76°33'22" EAST 40 76 FEET, THENCE SOUTH 09°53'34" WEST 11.42 FEET, THENCE NORTH 87°28'23" WEST 31 88 FEET, THENCE NORTH 72°17'16" WEST 40 76 FEET, THENCE SOUTH 88°04'38" WEST 40.35 FEET, THENCE SOUTH 18°15'34" EAST 30.32 FEET, THENCE SOUTH 33°10'02" WEST 35.24 FEET, THENCE SOUTH 10°47'49" WEST 14.86 FEET TO THE NORTHERLY LINE OF JOSEPHINE STREET, THENCE ALONG SAID JOSE PHINE STREET SOUTH 75°26'42" WEST 84 15 FEET TO A NON-TANGENT 500.00 FOOT RADIUS CURVE CONCAVE SOUTHEASTERLY; THENCE ALONG SAID CURVE 319.49 FEET THROUGH A CENTRAL ANGLE OF 36°36'38" TO THE POINT OF BEGINNING.

CONTAINING 2.28 ACRES MORE OR LESS

JAMES D NOWLAN PLS 4620

Appendix B

PLANT SPECIES OBSERVED

Appendix B
PLANT SPECIES OBSERVED ON THE USD CAMPUS DURING SURVEYS IN 2015

Family	Scientific Name	Common Name	Habitat[1]
Ferns			
Pteridaceae	*Pellaea andromedifolia*	coffee fern	NNG
Dicots			
Adoxaceae	*Sambucus nigra* ssp. *canadensis*	black elderberry	DCSS
Aizoaceae	*Carpobrotus edulis*[2]	hottentot-fig	EW, NNV
	Malephora crocea[2]	croceum iceplant	NNV
	Mesembryanthemum nodiflorum[2]	slender-leaved iceplant	DL
Anacardiaceae	*Malosma laurina*	laurel sumac	DCSS, NNG
	Rhus integrifolia	lemonadeberry	DCSS, EW, SMC
	Schinus terebinthifolius[2]	Brazilian pepper tree	SWS-D
	Toxicodendron diversilobum	poison oak	SMC
Apiaceae	*Conium maculatum*[2]	poison hemlock	DL
Asteraceae	*Artemisia californica*	California sagebrush	DCSS, NNG
	Baccharis sarothroides	broom baccharis	BS, DCSS
	Baccharis salicifolia	mule fat	SWS
	Carduus pycnocephalus[2]	Italian thistle	DL
	Centaurea melitensis[2]	star thistle	DL
	Deinandra fasciculata	fascicled tarplant	DCSS
	Encelia californica	California encelia	NNG
	Encelia farinosa[3]	brittlebush	NNG
	Erigeron canadensis	horseweed	DCSS
	Isocoma menziesii	goldenbush	DCSS
	Glebionis coronaria[2]	garland daisy	DL, NNG
	Pseudognaphalium californicum	California everlasting	DCSS
	Sonchus oleraceus[2]	common sow thistle	NNG
Brassicaceae	*Brassica rapa*[2]	field mustard	NNG
	Lepidium nitidum	shining peppergrass	NNG
Capparaceae	*Peritoma arborea*	bladderpod	DCSS, NNG

Appendix B (cont.)
PLANT SPECIES OBSERVED ON THE USD CAMPUS DURING SURVEYS IN 2015

Family	Scientific Name	Common Name	Habitat[1]
Dicots (cont.)			
Cucurbitaceae	*Cucurbita foetidissima*	calabazilla	DL
Chenopodiaceae	*Atriplex semibaccata*[2]	Australian saltbush	DL
	Chenopodium murale[2]	nettle-leaf goosefoot	DL
	Salsola tragus[2]	Russian thistle	NNG, DL
Crassulaceae	*Crassula ovata*[2]	jade plant	EW
	Dudleya edulis	ladies-fingers	DCSS, MSS
	Dudleya pulverulenta	chalk-lettuce	DCSS
Cactaceae	*Cylindropuntia prolifera*	coastal cholla	DCSS, MSS
	Ferocactus viridescens[4]	coast barrel cactus	DCSS, MSS
	Mammillaria dioica	fishhook cactus	MSS
	Opuntia ficus-indica[2]	Indian-fig	NNG
	Opuntia littoralis	coastal prickly pear	DCSS, MSS
Fabaceae	*Acmispon glaber*	deerweed	NNG, DCSS
	Lepidium didymum[2]	spine cress	DL
Fabaceae	*Quercus agrifolia*	coast live oak	DCSS
Geraniaceae	*Erodium cicutarium*[2]	red-stem filaree	DL
	Geranium cultivar[2]	geranium	EW
Iridaceae	*Sisyrinchium bellum*	blue-eyed grass	NNG
Lamiaceae	*Salvia mellifera*	black sage	DCSS, MSS
Myrtaceae	*Eucalyptus camaldulensis*[2]	river red gum	EW, NNG
Nyctaginaceae	*Mirabilis laevis.* ssp. *crassifolia*	wishbone plant	DCSS
Plantaginaceae	*Antirrhinum nuttallianum*	Nuttall's snapdragon	DCSS
Plumbaginaceae	*Limonium perezii*[2]	statice	DL
Polygonaceae	*Eriogonum fasciculatum*	California buckwheat	MSS, DCSS, NNG
Rhamnaceae	*Adolphia californica*[4]	California adolphia	DCSS
Rosaceae	*Adenostoma fasciculata*	chamise	SMC
	Heteromeles arbutifolia	toyon	SMC
Salicaceae	*Salix lasiolepis*	arroyo willow	SWS
Simmondsiaceae	*Simmondsia chinensis*	jojoba	NNG, MSS
Solanaceae	*Lycium californicum*[4]	California box-thorn	MSS
	Nicotiana glauca[2]	tree tobacco	DL

Appendix B (cont.)
PLANT SPECIES OBSERVED ON THE USD CAMPUS DURING SURVEYS IN 2015

Family	Scientific Name	Common Name	Habitat[1]
Monocots			
Agavaceae	*Yucca schidigera*	Mohave yucca	DCSS, MSS
Palmaceae	*Phoenix canariensis*[2]	Canary Island date palm	NNV
Poaceae	*Arundo donax*[2]	giant reed	ADR
	Avena barbata[2]	slender wild oat	NNG
	Bothriochloa barbinodis	cane bluestem	NNG, DCSS
	Brachypodium distachyon[2]	purple falsebrome	DCSS
	Bromus diandrus[2]	common ripgut grass	DCSS, NNG
	Bromus madritensis ssp. *rubens*[2]	red brome	NNG
	Cortaderia selloana[2]	pampas grass	DL
	Cynodon dactylon[2]	Bermuda grass	DL, NNG
	Distichlis spicata	saltgrass	NNG
	Elymus condensatus	giant wild rye	DCSS
	Pennisetum setaceum[2]	fountain grass	DL
	Stipa millacea[2]	smilo grass	NNV
	Stipa pulchra	purple needlegrass	NNG, DCSS

[1] Habitats: ADR=Arundo dominated riparian; BS=baccharis scrub; DCSS=Diegan coastal sage scrub; DEV=developed; DL=disturbed land; EW=eucalyptus woodland; MSS=maritime succulent scrub; NNG=non-native grassland; NNV=non-native vegetation; SMC=southern mixed chaparral; SWS=southern willow scrub, -D=disturbed phase.

[2] Non-native species.

[3] Not native at this location.

[4]Sensitive species.

THIS PAGE INTENTIONALLY LEFT BLANK

Appendix C

EXPLANATION OF STATUS CODES FOR PLANT AND WILDLIFE SPECIES

Appendix C
EXPLANATION OF STATUS CODES
FOR PLANT AND WILDLIFE SPECIES

U.S. Fish and Wildlife Service (USFWS)

FE Federal Listed Endangered
FT Federal Listed Threatened
FC Candidate for Federal Endangered Species Act Protection
BCC Bird of Conservation Concern—Represents USFWS' highest conservation priorities and draw attention to species in need of conservation action.

California Department of Fish and Wildlife (CDFW)

SE State Listed Endangered
ST State Listed Threatened
SR State Listed Rare
SC Candidate for State Endangered Species Act Protection
SSC State Species of Special Concern—Declining population levels, limited ranges, and/or continuing threats have made them vulnerable to extinction.
WL Watch List—Birds that are/were: a) not on the current list of species of special concern but were on previous lists and have not been State listed under the California Endangered Species Act; b) previously State or federally listed and now are on neither list; or c) on the list of "Fully Protected" species.
FP Fully Protected refers to all vertebrate and invertebrate taxa of concern to the California Natural Diversity Data Base regardless of legal or protection status. These species may not be taken or possessed without a permit from the Fish and Game Commission and/or CDFW.

City of San Diego

MSCP Covered Species are those included in the Incidental Take Authorization issued to the City by the USFWS and CDFW as part of the City's MSCP Subarea Plan.

NE Narrow Endemic A species that is confined to a specific geographic region, soil type, and/or habitat.

Appendix C (cont.)
EXPLANATION OF STATUS CODES
FOR PLANT AND WILDLIFE SPECIES

California Native Plant Society (CNPS)

California Rare Plant Rank

1A = Presumed extirpated in California and either rare or extinct elsewhere.
1B = Rare, threatened, or endangered in California and elsewhere.

2A= Presumed extirpated in California but more common elsewhere.
2B= Rare, threatened, or endangered in California but more common elsewhere.
3 = More information is needed.
4 = A watch list for species of limited distribution.

Threat Rank

.1 = Seriously endangered in California (over 80 percent of occurrences threatened/high degree and immediacy of threat)

.2 = Moderately endangered in California (20 to 80 percent occurrences threatened/moderate degree and immediacy of threat)

.3 = Not very threatened in California (less than 20 percent of occurrences threatened/ low degree and immediacy of threat or no current threats known)

Appendix D

SENSITIVE PLANT SPECIES NOT OBSERVED BUT WITH POTENTIAL TO OCCUR

Appendix D SENSITIVE PLANT SPECIES NOT OBSERVED ON THE USD CAMPUS BUT THAT MAY HAVE POTENTIAL TO OCCUR[1]				
SPECIES	**SENSITIVITY[2]** **Federal** **State** **CNPS** **City**	**POTENTIAL TO OCCUR**	**HABITAT(S)/RANGE**	**LIFEFORM[3] AND BLOOM PERIOD**
San Diego thornmint (*Acanthomintha ilicifolia*)	FT SE CNPS 1B.1 MSCP Covered, NE	None	Found in small populations in friable or broken, clay soils in grassy openings in chaparral, coastal scrub, valley and foothill grassland, and vernal pool areas. It occurs only in San Diego County in California at elevations from approximately 32 feet to 3,150 feet AMSL (CNPS 2015; Reiser 2001). This species is presumed extirpated from the USGS La Jolla Quadrangle where the campus lies (CNPS 2015), and there are no clay soils on campus. Therefore, it is not considered to have potential to occur on campus.	Annual herb April to June
Shaw's agave (*Agave shawii*)	-- -- CNPS 2B.1 MSCP Covered, NE	None	Found in maritime succulent scrub, coastal bluff scrub, and coastal scrub at elevations from approximately 30 to 390 feet AMSL only in San Diego County in California. It is not reported from the USGS La Jolla Quadrangle (CNPS 2015), and Reiser (2001) notes only one possible native population south of Point Loma College and other introduced populations—none of which are near the USD campus. Therefore, Shaw's agave is not considered to have potential to occur on campus.	Perennial leaf succulent September to May

Appendix D (cont.) **SENSITIVE PLANT SPECIES NOT OBSERVED ON THE USD CAMPUS BUT THAT MAY HAVE POTENTIAL TO OCCUR[1]**				
SPECIES	**SENSITIVITY[2]** **Federal** **State** **CNPS** **City**	**POTENTIAL TO OCCUR**	**HABITAT(S)/RANGE**	**LIFEFORM[3] AND BLOOM PERIOD**
San Diego ambrosia (*Ambrosia pumila*)	FE -- CNPS 1B.1 MSCP Covered, NE	None	Found in disturbed areas within chaparral, coastal sage scrub, grasslands, and vernal pools with sandy loam or clay (sometimes alkaline) soils (CNPS 2015). Its range in California includes coastal San Diego County and western Riverside County at elevations from approximately 65 feet to 1,360 feet AMSL (CNPS 2015; Reiser 2001). The nearest location to the USD campus reported by Reiser (2001) is "about one mile west of Mission San Diego de Alcala near San Diego stadium where likely extirpated." San Diego ambrosia is not considered to have potential to occur on campus.	Perennial, rhizomatous herb April to October

Appendix D (cont.) **SENSITIVE PLANT SPECIES NOT OBSERVED ON THE USD CAMPUS BUT THAT MAY HAVE POTENTIAL TO OCCUR[1]**				
SPECIES	**SENSITIVITY[2]** **Federal** **State** **CNPS** **City**	**POTENTIAL TO OCCUR**	**HABITAT(S)/RANGE**	**LIFEFORM[3] AND BLOOM PERIOD**
Aphanisma (*Aphanisma blitoides*)	-- -- CNPS 1B.2 MSCP Covered, NE	None	Found in sandy or gravelly coastal bluff scrub, coastal dunes, and coastal scrub at elevations from approximately three feet to 1,000 feet AMSL (CNPS 2015). Its range in California includes Santa Barbara, Los Angeles, Ventura, Orange, and San Diego counties, as well as a number of the Channel Islands (CNPS). In the La Jolla Quadrangle where the USD campus lies, CNPS is uncertain about the distribution or identity of the species. Reiser (2001) describes the historical mainland habitat of this species as "coastal bluffs near the ocean and beach dunes," none of which are present on the USD campus. Reiser (2001) also claims that this specie is close to, or may be, extirpated from San Diego County. Therefore, aphanisma is not considered to have potential to occur on campus.	Annual herb February to June

Appendix D (cont.) **SENSITIVE PLANT SPECIES NOT OBSERVED ON THE USD CAMPUS BUT THAT MAY HAVE POTENTIAL TO OCCUR[1]**				
SPECIES	**SENSITIVITY[2]** **Federal** **State** **CNPS** **City**	**POTENTIAL TO OCCUR**	**HABITAT(S)/RANGE**	**LIFEFORM[3] AND BLOOM PERIOD**
Coastal dunes milk-vetch (*Astraglus tener* var. *titi*)	FE SE CNPS 1B.1 MSCP Covered, NE	None	Found in (often vernally mesic) coastal bluff scrub (sandy), coastal dunes, and coastal prairie at elevations from approximately three feet to 165 feet AMSL. Its range in California includes Los Angeles County (presumed extirpated), Monterey County, and San Diego County (presumed extirpated/uncertain about distribution or identity; CNPS 2015). Reiser (2001) reports that, other than a population extirpated on the Silver Strand, there are no other confirmed reports of this species in San Diego County. Therefore, coastal dunes milk-vetch is not considered to have potential to occur on campus.	Annual herb March to May
Encinitas baccharis (*Baccharis vanessae*)	FT SE CNPS 1B.1 MSCP Covered, NE	None	Found on sandstone in maritime chaparral and cismontane woodland. Its range includes San Diego County, but it is not known from the La Jolla Quadrangle where the campus lies, and there may be no suitable habitat present. Therefore, Encinitas baccharis is not considered to have potential to occur on campus.	Perennial, deciduous shrub August to November

Appendix D (cont.) **SENSITIVE PLANT SPECIES NOT OBSERVED ON THE USD CAMPUS BUT THAT MAY HAVE POTENTIAL TO OCCUR[1]**				
SPECIES	**SENSITIVITY[2]** **Federal** **State** **CNPS** **City**	**POTENTIAL TO OCCUR**	**HABITAT(S)/RANGE**	**LIFEFORM[3] AND BLOOM PERIOD**
Golden-spined cereus (*Bergerocactus emoryi*)	-- -- CNPS 2B.2 --	Low	Found in sandy soils in closed-cone coniferous forest, chaparral, and coastal scrub at elevations of approximately 10 feet to 1,295 feet AMSL. Maritime succulent scrub is the primary habitat of this cactus, and moist ocean breezes may be a key habitat requirement (Reiser 2001). Its range in California is southern San Diego County and Santa Catalina and San Clemente islands (CNPS 2015; Reiser 2001). CNPS (2015) does not include reports of the species in the USGS La Jolla Quadrangle. This perennial stem succulent likely would have been observed during campus surveys in 1993/1994 and 2015, so it is considered to have low potential to occur.	Perennial stem succulent May to June
Snake cholla (*Cylindropuntia* [*Opuntia*] *californica* var. *californica*)	-- -- CNPS 1B.1 MSCP Covered, NE	Low	Found in chaparral and coastal scrub on xeric hillsides at elevations of approximately 100 feet to 495 feet AMSL. Its range in California is San Diego County (CNPS 2015; Reiser 2001). CNPS (2015) does not include reports of the species in the USGS La Jolla Quadrangle. This perennial stem succulent likely would have been observed during campus surveys in 1993/1994 and 2015, so it is considered to have low potential to occur.	Perennial stem succulent April to May

Appendix D (cont.) **SENSITIVE PLANT SPECIES NOT OBSERVED ON THE USD CAMPUS BUT THAT MAY HAVE POTENTIAL TO OCCUR[1]**				
SPECIES	**SENSITIVITY[2]** **Federal** **State** **CNPS** **City**	**POTENTIAL TO OCCUR**	**HABITAT(S)/RANGE**	**LIFEFORM[3] AND BLOOM PERIOD**
Otay tarplant (*Deinandra conjugens*)	FT SE CNPS 1B.1 MSCP Covered, NE	None	Found in clay soils in coastal scrub and valley and foothill grassland at elevations of approximately 80 feet to 985 feet AMSL (CNPS 2015). Fractured clay soils in grasslands or lightly vegetated Diegan coastal sage scrub are the preferred habitats of this species (Reiser 2001). Its range in California is southern San Diego County (Reiser 2001). CNPS (2015) does not include reports of the species in the USGS La Jolla Quadrangle, which is likely too far north for this species, and there are no clay soils on campus. Therefore, Otay tarplant is not considered to have potential to occur on campus.	Annual herb April to June
Short-leaved dudleya (*Dudleya* [*blochmaniae* ssp.] *brevifolia*)	-- SE CNPS 1B.1 MSCP Covered, NE	None	Found on Torrey sandstone in openings in maritime chaparral, chamise chaparral, coastal scrub, and Torrey pines forest at elevations from approximately 95 feet to 820 feet AMSL only in San Diego County in California (CNPS 2015; Reiser 2001). Small, iron-bearing concretions have been observed at all known sites for this species (Reiser 2001). Soils on campus do not include Torrey sandstone, so short-leaved dudleya is not considered to have potential to occur.	Perennial herb April to May

Appendix D (cont.) **SENSITIVE PLANT SPECIES NOT OBSERVED ON THE USD CAMPUS BUT THAT MAY HAVE POTENTIAL TO OCCUR[1]**				
SPECIES	**SENSITIVITY[2]** **Federal** **State** **CNPS** **City**	**POTENTIAL TO OCCUR**	**HABITAT(S)/RANGE**	**LIFEFORM[3] AND BLOOM PERIOD**
Variegated dudleya (*Dudleya variegata*)	-- -- CNPS 1B.2 MSCP Covered, NE	None	Found in clay soils in chaparral, cismontane woodland, coastal scrub, valley and foothill grassland, and vernal pool areas at elevations of approximately 10 feet to 1,900 feet AMSL (CNPS 2015). Usually grows in small areas devoid of shrub cover (Reiser 2001). Its range in California is San Diego County (CNPS 2015). Soils on campus do not include clays, so variegated dudleya is not considered to have potential to occur.	Perennial herb April to June
San Diego button-celery (*Eryngium aristulatum* var. *parishii*)	FE SE CNPS 1B.1 MSCP Covered, NE	Very low	Found in mesic coastal scrub, valley and foothill grassland, and vernal pools in Los Angeles, Orange, Riverside and San Diego counties in California. It has been reported from the La Jolla Quadrangle where the campus lies but not to the CNDDB on or near the campus. Potential habitat on campus is very limited, so San Diego button-celery is considered to have very low potential to occur.	Annual/perennial herb April to June

Appendix D (cont.) **SENSITIVE PLANT SPECIES NOT OBSERVED ON THE USD CAMPUS BUT THAT MAY HAVE POTENTIAL TO OCCUR[1]**				
SPECIES	**SENSITIVITY[2]** **Federal** **State** **CNPS** **City**	**POTENTIAL TO OCCUR**	**HABITAT(S)/RANGE**	**LIFEFORM[3] AND BLOOM PERIOD**
Cliff spurge (*Euphorbia misera*)	-- -- CNPS 2B.2 --	Low	Found in rocky coastal bluff scrub, coastal scrub, and Mojavean desert scrub at elevations from approximately 30 feet to 1,640 feet AMSL. Its range in California includes Santa Barbara, Los Angeles, Orange, Riverside, and San Diego counties, as well as San Clemente, Santa Catalina, and Santa Cruz islands (CNPS 2015). This perennial shrub likely would have been observed during campus surveys in 1993/1994 and 2015, so it is considered to have low potential to occur.	Perennial shrub December to October
Beach goldenaster (*Heterotheca sessiliflora* ssp. *sessiliflora*)	-- -- CNPS 1B.1 --	Low	Found in coastal chaparral, dunes, and scrub at elevations from sea level to approximately 4,020 feet AMSL in sandy locales (CNPS 2015; Reiser 2001). Its range in California is Santa Barbara (presumed extirpated) and San Diego counties (CNPS 2015). Reiser (2001) states that San Diego County populations are almost extirpated. This species, therefore, has low potential to occur on campus.	Perennial herb March to December

Appendix D (cont.) **SENSITIVE PLANT SPECIES NOT OBSERVED ON THE USD CAMPUS BUT THAT MAY HAVE POTENTIAL TO OCCUR[1]**				
SPECIES	**SENSITIVITY[2]** **Federal** **State** **CNPS** **City**	**POTENTIAL TO OCCUR**	**HABITAT(S)/RANGE**	**LIFEFORM[3] AND BLOOM PERIOD**
Spreading navarretia (*Navarretia fossalis*)	FT -- CNPS 1B.1 --[4], NE	None	Found in chenopod scrub, shallow freshwater marshes and swamps, playas, and vernal pools at elevations of approximately 100 feet to 2,150 feet AMSL. Vernal pools and vernal swales are the preferred habitats of this species, and it is rarely found in shallow pools (Reiser 2001). Its range in California is Los Angeles, Riverside, San Luis Obispo, and San Diego counties (CNPS 2015). Potential habitat for this species does not occur on campus; therefore, it is not considered to have potential to occur.	Annual herb April to June
California adder's-tongue (*Ophioglossum californicum*)	-- -- CNPB 4.2 --	Low	Found in mesic chaparral and valley and foothill grasslands and on vernal pool margins at elevations of approximately 195 feet to 1,725 feet AMSL in Amador, Butte, Merced, Monterey, Mariposa, Orange, San Bernardino, San Diego, Stanislaus, and Tuolumne counties in California (CNPS 2015). CNPS (2015) does not include reports of the species in the USGS La Jolla Quadrangle. This species is considered to have low potential to occur on campus due to limited potential habitat.	Perennial, rhizomatous herb December to June

Appendix D (cont.)
SENSITIVE PLANT SPECIES NOT OBSERVED ON THE USD CAMPUS BUT THAT MAY HAVE POTENTIAL TO OCCUR[1]

SPECIES	SENSITIVITY[2] Federal State CNPS City	POTENTIAL TO OCCUR	HABITAT(S)/RANGE	LIFEFORM[3] AND BLOOM PERIOD
California Orcutt grass (*Orcuttia californica*)	FE SE CNPB 1B.1 --[4], NE	None	Found in vernal pools at elevations of approximately 50 feet to 2,165 feet AMSL in Los Angeles, Riverside, Ventura, and San Diego counties in California (CNPS 2015). Potential vernal pool habitat for this species does not occur on campus; therefore, it is not considered to have potential to occur.	Annual herb April to August
San Diego mesa mint (*Pogogyne abramsii*)	FE SE CNPS 1B.1 --[4], NE	None	Found in vernal pools at elevations of approximately 295 feet to 655 feet AMSL only in San Diego County in California (CNPS 2015). Potential vernal pool habitat for this species does not occur on campus, and the campus may be too low in elevation. Therefore, San Diego mesa mint is not considered to have potential to occur.	Annual herb March to July
Otay Mesa mint (*Pogogyne nudiuscula*)	FE SE CNPS 1B.1 --[4], NE	None	Found in vernal pools at elevations of approximately 295 feet to 820 feet AMSL on Otay Mesa in San Diego County in California (CNPS 2015; Reiser 2001). Potential vernal pool habitat for this species does not occur on campus; the campus is too far north; and the campus may be too low in elevation. Therefore, Otay Mesa mint is not considered to have potential to occur.	Annual herb May to July

[1]This table addresses all City Narrow Endemic plant species even if they do not have potential to occur on the USD campus.
[2]See Appendix C for an explanation of sensitivity codes.
[3]Lifeform and bloom period are from CNPS (2015).

[4]Based on a 2006 federal district court ruling that the City's MSCP Subarea Plan does not provide adequate protection for Riverside fairy shrimp (*Streptocephalus woottoni*), the City surrendered permit coverage for seven vernal pool species on April 20, 2010 (City 2010). The seven species include San Diego fairy shrimp (*Branchinecta sandiegonensis*), Riverside fairy shrimp, Otay Mesa mint, San Diego mesa mint, California Orcutt grass, San Diego button-celery (*Eryngium aristulatum* var. *parishii*), and spreading navarretia. The USFWS subsequently cancelled the permit as it applied to those seven species on May 14, 2010 (USFWS 2011). Development involving take of any of the seven vernal pool species, therefore, requires authorization from the USFWS through the federal incidental take process until the City completes a new Vernal Pool Habitat Conservation Plan and enters into another Implementing Agreement for a new federal Incidental Take Permit for those species.

California Native Plant Society, Rare Plant Program. 2015. Inventory of Rare and Endangered Plants (online edition, v8-02). California Native Plant Society, Sacramento, CA. http://www.rareplants.cnps.org

City of San Diego. 2010. A resolution authorizing the mayor to issue a letter relinquishing coverage of the seven vernal pool species to the U.S. Fish and Wildlife Service (R-2010-590). February 26.

Reiser, C. H. 2001. *Rare Plants of San Diego County.* Aquafir Press, Imperial Beach, California.

U.S. Fish and Wildlife Service. 2011. 50 CFR Part 17 Endangered and Threatened Wildlife and Plants; Revised Critical Habitat for the Riverside Fairy Shrimp. Federal Register / Vol. 76, No. 105 / Wednesday, June 1 / Proposed Rules.

THIS PAGE INTENTIONALLY LEFT BLANK

Appendix E

ANIMAL SPECIES OBSERVED

Appendix E
ANIMAL SPECIES OBSERVED ON THE USD CAMPUS DURING SURVEYS IN 2015

Family	Species Name	Common Name
Reptiles		
Phrynosomatidae	*Sceloporus occidentalis*	western fence lizard
	Uta stansburiana	common side-blotched lizard
Teiidae	*Aspidoscelis hyperythra beldingi*[1]	Belding's orange-throated whiptail
Birds		
Accipitridae	*Buteo jamaicensis*	red-tailed hawk
Columbidae	*Zenaida macroura*	mourning dove
Corvidae	*Aphelocoma californica*	western scrub jay
	Corvus brachyrhynchos	American crow
	Corvus corax	common raven
Emberizidae	*Pipilo crissalis*	California towhee
Fringillidae	*Carduelis psaltria*	lesser goldfinch
	Carpodacus mexicanus	house finch
Mimidae	*Mimus polyglottos*	northern mockingbird
Picidae	*Picoides nuttallii*[1]	Nuttall's woodpecker
Polioptilidae	*Polioptila californica californica*[1]	coastal California gnatcatcher
Sylviidae	*Chamaea fasciata*	wrentit
Trochilidae	*Calypte anna*	Anna's hummingbird
Tyrannidae	*Sayornis nigricans*	black phoebe
	Tyrannus verticalis	western kingbird
Mammals		
Geomyidae	*Thomomys bottae*	Botta's pocket gopher
Leporidae	*Sylvilagus audubonii*	desert cottontail

[1] Sensitive species

THIS PAGE INTENTIONALLY LEFT BLANK

Appendix F

SENSITIVE ANIMAL SPECIES NOT OBSERVED BUT WITH POTENTIAL TO OCCUR

Appendix F SENSITIVE ANIMAL SPECIES NOT OBSERVED ON THE USD CAMPUT BUT THAT MAY HAVE POTENTIAL TO OCCUR			
SPECIES	**SENSITIVITY[1]** **Federal** **State** **City**	**POTENTIAL TO OCCUR**	**HABITAT(S)/RANGE**
Invertebrates			
Quino checkerspot butterfly (*Euphydryas editha quino*)	FE -- --	Low	Extant populations of this species primarily inhabit grassland, remnant forbland, juniper woodland, and open scrub and chaparral communities that support its primary larval host plant (dot-seed plantain [*Plantago erecta*]) and a variety of adult nectar resources. These areas tend to be distributed as patches in a mosaic of vegetation communities. Microhabitat use appears to include patches of exposed soil with abundant sun exposure. The Quino checkerspot has been reported over a wide elevation range from approximately 500 feet AMSL to higher than 5,000 feet AMSL (USFWS 2003). The USD campus is outside the potential range of the Quino based on the recommended survey area map in the USFWS Quino Checkerspot Butterfly Survey Guidelines (USFWS 2014). Therefore, this species is not considered to have potential to occur.
Amphibians			
Western spadefoot (*Spea hammondii*)	-- SSC --	Low	The western spadefoot inhabits floodplains, washes, and low hills. In southern California, its habitats include coastal sage scrub, chaparral, and grassland. Important habitat components include temporary pools (which form during winter and spring rains) for breeding and friable soils for burrowing. This species occurs in California's Central Valley and the San Francisco Bay area south along the coast to northwestern Baja California, Mexico. Potential habitat for this species is absent or very limited on campus, so it is considered to have low potential to occur.

Appendix F (cont.) **SENSITIVE ANIMAL SPECIES NOT OBSERVED ON THE USD CAMPUT BUT THAT MAY HAVE POTENTIAL TO OCCUR**			
SPECIES	**SENSITIVITY[1]** **Federal** **State** **City**	**POTENTIAL TO OCCUR**	**HABITAT(S)/RANGE**
Reptiles			
Southern California legless lizard (*Anniella stebbinsi*) *Anniella pulchra* has been divided into five species (CaliforniaHerps.com2015a). CDFW (2015) still lists silvery legless lizard (*Anniella pulchra pulchra*).	-- SSC --	Low	Found in moist, warm, loose soil in sparsely vegetated areas of beach dunes, chaparral, pine-oak woodlands, desert scrub, sandy washes, and stream terraces in southern California south of the Transverse Ranges into northern Baja California, Mexico (CaliforniaHerps.com2015a). Potential habitat for this species is extremely limited or absent on campus, so it is considered to have low potential to occur.
Red-diamond rattlesnake (*Crotalus ruber*)	-- SSC --	Low	The red-diamond rattlesnake can be found in chaparral, coastal sage scrub, and along creek banks, particularly among rock outcrops or piles of debris supporting rodents. It ranges from extreme southeastern Los Angeles County (Diamond Bar) into southern San Bernardino County, and south into southern Baja California, Mexico. Based on the limited availability of potential habitat on campus, this species is considered to have low potential to occur.

Appendix F (cont.) **SENSITIVE ANIMAL SPECIES NOT OBSERVED ON THE USD CAMPUT BUT THAT MAY HAVE POTENTIAL TO OCCUR**			
SPECIES	**SENSITIVITY[1]** **Federal** **State** **City**	**POTENTIAL TO OCCUR**	**HABITAT(S)/RANGE**
Reptiles (cont.)			
Coronado skink (*Plestiodon skiltonianus interparietalis*)	-- SSC --	Low	This skink can be found in grasslands, coastal sage scrub, open chaparral, pine oak woodland, and coniferous forests. It prefers areas where there is abundant leaf litter or low, herbaceous growth. It occurs in inland southern California south through the north Pacific coast region of northern Baja California Norte, Mexico at elevations from sea level to 8,300 feet AMSL (CaliforniaHerps.com 2015b). Based on the limited availability of potential habitat on campus, this species is considered to have low potential to occur.

Appendix F (cont.) **SENSITIVE ANIMAL SPECIES NOT OBSERVED ON THE USD CAMPUT BUT THAT MAY HAVE POTENTIAL TO OCCUR**			
SPECIES	**SENSITIVITY[1]** **Federal** **State** **City**	**POTENTIAL TO OCCUR**	**HABITAT(S)/RANGE**
Reptiles (cont.)			
Coast horned lizard (*Phrynosoma blainvillii*)	-- SSC MSCP Covered	Low	Coast horned lizards are found in a wide variety of habitats including coastal sage scrub, chaparral, grassland, coniferous forest, oak woodland, riparian, and the margins of the higher elevation desert where it is restricted to juniper-desert chaparral (Grinnell and Grinnell 1907, Van Denburgh 1922, Klauber 1939, Smith 1946, Dixon 1967, Stebbins 1985, Jennings and Hayes 1994, and Brattstrom 1997 *in* Hollingsworth and Beaman 2005). This species has been reported from elevations ranging from sea level to 8,000 feet AMSL (Brattstrom 1997 *in* Hollingsworth and Beaman 2005). Within each of these habitats, this species prefers areas with loose, fine soils, an abundance of open areas for basking. It is insectivorous and primarily feeds on native harvester ants (*Pogonomyrmex* spp.) but will also feed on termites, beetles, flies, wasps, and grasshoppers (Ingles 1929, Reeve 1952, Miller and Stebbins 1964, Dixon 1967, Pianka and Parker 1975, Stebbins 1985, and Jennings and Hayes 1994 *in* Hollingsworth and Beaman 2005). Based on the limited availability of potential habitat on campus, this species is considered to have low potential to occur.

Appendix F (cont.) **SENSITIVE ANIMAL SPECIES NOT OBSERVED ON THE USD CAMPUT BUT THAT MAY HAVE POTENTIAL TO OCCUR**			
SPECIES	**SENSITIVITY[1]** **Federal** **State** **City**	**POTENTIAL TO OCCUR**	**HABITAT(S)/RANGE**
Reptiles (cont.)			
Coast patch-nosed snake (*Salvadora hexalepis virgultea*)	-- SSC --	Low	Found in semi-arid brushy areas and chaparral in canyons, rocky hillsides, and plains in California from the northern Carrizo Plains in San Luis Obispo County, south through the coastal zone, south and west of the deserts, into coastal northern Baja California, Mexico (CaliforniaHerps.com 2015c). Based on the limited availability of potential habitat on campus, this species is considered to have low potential to occur.
Birds			
Southern California rufous-crowned sparrow (*Aimophila ruficeps canescens*)	-- WL MSCP Covered	Moderate	This sparrow prefers coastal sage scrub (Unitt 2004) but can also be found breeding in coastal bluff scrub, low-growing serpentine chaparral, and along the edges of tall chaparral habitats (Thorngate and Parsons 2005), as well as in open chaparral or coastal sage scrub and grasslands with scattered shrubs (Unitt 2004). Following a chaparral fire, suitable habitat may develop in the early stages of chaparral re-growth (Gallagher 1997), and rufous-crowned sparrows may stay in such open, disturbed habitats for years (Rising 1996, Collins 1999). The *canescens* subspecies of *Aimophila ruficeps* is a resident of southwest California on the slopes of the Transverse and Coastal Ranges from Los Angeles County south to Baja California Norte, Mexico. It can also be found on San Martin Island (Thorngate and Parsons 2005). The southern California rufous-crowned sparrow has moderate potential to occur on campus.

Appendix F (cont.) **SENSITIVE ANIMAL SPECIES NOT OBSERVED ON THE USD CAMPUT BUT THAT MAY HAVE POTENTIAL TO OCCUR**			
SPECIES	**SENSITIVITY[1]** **Federal** **State** **City**	**POTENTIAL TO OCCUR**	**HABITAT(S)/RANGE**
Birds (cont.)			
Bell's sage sparrow (*Artemisiospiza belli belli*)	BCC WL --	Low	The Bell's sage sparrow can be found in chaparral and sage scrub. The habitat must not be too dense or have too much leaf litter. Its distribution throughout San Diego County is patchy, which often shifts to include partially recovered burned areas (Unitt 2004). The Bell's sage sparrow has low potential to occur on campus due to its particular habitat requirements.
Burrowing owl (*Athene cunicularia*)	-- SSC MSCP Covered	Very low	The burrowing owl is a declining species that occurs in grassland or open scrub habitats. In 2003, there were an estimated 25 to 30 resident pairs of in San Diego County located primarily in the southern quarter of the county and on North Island (Lincer and Bloom 2007). The burrowing owl has very low potential to occur on campus due to its rarity and limited potential habitat on campus.

Appendix F (cont.) **SENSITIVE ANIMAL SPECIES NOT OBSERVED ON THE USD CAMPUT BUT THAT MAY HAVE POTENTIAL TO OCCUR**			
SPECIES	**SENSITIVITY[1]** **Federal** **State** **City**	**POTENTIAL TO OCCUR**	**HABITAT(S)/RANGE**
Birds (cont.)			
Coastal cactus wren (*Camphylorhynchus brunneicapillus sandiegensis*)	-- SSC MSCP Covered	Low	The key element of San Diego cactus wren habitat is thickets of cholla (*Opuntia prolifera*) or prickly pear cacti (*O. littoralis*, *O. oricola*) tall enough to support and protect the birds' nests (Shuford et al. 2008). The San Diego Cactus Wren has a very limited range, extending from extreme northwestern Baja California, Mexico (Valle De las Palmas) north through the coastal lowlands of San Diego County and, apparently, into southern Orange County (Rea and Weaver 1990 *in* Shuford et al. 2008). Unitt (2004) shows possible breeding for the coastal cactus wren in a grid cell that appears to include the USD campus, and the campus supports maritime succulent scrub with coastal cholla and coastal prickly pear cacti. Still, due to the limited amount of potential habitat on campus and its location surrounded by development, the potential for coastal cactus wren to occur is considered low.
Yellow-breasted chat (*Icteria virens*)	-- SSC --	Low	In California, the yellow-breasted chat is found in dense riparian thickets and brush during its breeding season, and it is mostly absent during the winter (Ricketts and Kus 2000). While there is some potential riparian habitat on campus, it is extremely limited in area, so this species is considered to have low potential to occur.

Appendix F (cont.) **SENSITIVE ANIMAL SPECIES NOT OBSERVED ON THE USD CAMPUT BUT THAT MAY HAVE POTENTIAL TO OCCUR**			
SPECIES	**SENSITIVITY[1]** **Federal** **State** **City**	**POTENTIAL TO OCCUR**	**HABITAT(S)/RANGE**
Birds (cont.)			
Yellow warbler (*Setophaga petechia*)	BCC SSC --	Low	The yellow warbler can be found in riparian woodland, Mojave riparian forest, mule fat scrub, or southern willow scrub in California during its breeding season. It winters in Central America and South America. While there is some potential riparian habitat on campus, it is extremely limited in area, so this species is considered to have low potential to occur.
Least Bell's vireo (*Vireo bellii pusillus*)	FE SE MSCP Covered	Low	The least Bell's vireo is found in mature riparian woodland, Mojave riparian forest, mule fat scrub, or southern willow scrub in California and northern Baja California, Mexico during its breeding season. It winters in southern Baja California, Mexico. This vireo has been reported to the CNDDB in Tecolote Canyon (in the MHPA) near the northeastern portion of the proposed MPU boundary. However, the potential vireo habitat in the MHPA is more than 500 feet away from the nearest MPU proposed construction. While there is some potential riparian habitat on campus, it is extremely limited in area, so this species is considered to have low potential to occur on campus.

Appendix F (cont.) **SENSITIVE ANIMAL SPECIES NOT OBSERVED ON THE USD CAMPUT BUT THAT MAY HAVE POTENTIAL TO OCCUR**			
SPECIES	**SENSITIVITY[1]** **Federal** **State** **City**	**POTENTIAL TO OCCUR**	**HABITAT(S)/RANGE**
Mammals			
Dulzura pocket mouse (*Chaetodipus californicus femoralis*)	-- SSC --	Low	Found primarily in chaparral but has been trapped in mule fat scrub and is known to occur in coastal sage scrub. It has been reported from the mouth of the Santa Margarita River south into northern Baja California, Mexico. In San Diego County, this species ranges eastward to the desert transition zone. While there is some potential habitat on campus, it is limited in area, so this species is considered to have low potential to occur.
Northwestern San Diego pocket mouse (*Chaetodipus fallax fallax*)	-- SSC --	Low	Found in open areas of coastal sage scrub and weedy growth, often on sandy substrates. This species ranges from Los Angeles County and southern San Bernardino County south into west-central Baja California, Mexico. While there is some potential habitat on campus, it is limited in area, so this species is considered to have low potential to occur.

[1]See Appendix C for an explanation of sensitivity codes.

CaliforniaHerps.com. 2015a. Southern California Legless Lizard – *Anniella stebbinsi* http://www.californiaherps.com/lizards/pages/a.stebbinsi.html

2015b.Coronado Skink – *Plestiodon skiltonianus interparietalis* http://www.californiaherps.com/lizards/pages/p.s.interparietalis.html

2015c. Coast Patch-nosed Snake – *Salvadora hexalepis virgultea* http://www.californiaherps.com/snakes/pages/s.h.virgultea.html

Collins, P.W. 1999. Rufous-crowned Sparrow in *The Birds of North America* (A. Poole and F. gill, eds.). no. 472. Birds N. Am., Philadelphia.

Gallagher, S.R. 1997. *Atlas of Breeding Birds, Orange County, California*. Sea and Sage Aubudon Press, Irvine, California.

Hollingsworth, Bradford D. and Kent R. Beaman. 2005. San Diego Horned Lizard (*Phrynosoma coronatum blainvillii*) Species Account. Final Environmental Impact Report and Statement for the West Mojave Plan. January. http://www.blm.gov/ca/pdfs/cdd_pdfs/wemo_pdfs/plan/wemo/Species%20Accounts/Species%20Accounts-Reptiles.pdf OR http://www.blm.gov/ca/pdfs/cdd_pdfs/hornliz1.PDF

Lincer, Jeffrey L. and Peter H. Bloom. 2007. The Status of the Burrowing Owl in San Diego County, California. *Proceedings of the California Burrowing Owl Symposium* 90-102. http://www.globalraptors.org/grin/researchers/uploads/195/burrowing_owl_status_2007.pdf

Ricketts, M. and B. Kus. 2000. Yellow-breasted Chat (*Icteria virens*). *In* The Riparian Bird Conservation Plan:a strategy for reversing the decline of riparian-associated birds in California. California Partners in Flight. http://www.prbo.org/calpif/htmldocs/riparian_v-2.html

Rising J.D. 1996. *A Guide to the Identification and Life History of the Sparrows of the United States and Canada*. San Diego, CA: Academic Press. 365pp.

Shuford, W.D., and Gardali, T., editors. 2008. San Diego Cactus Wren Species Account. California Bird Species of Special Concern: A ranked assessment of species, subspecies, and distinct populations of birds of immediate conservation concern in California. Studies of Western Birds 1. Western Field Ornithologists, Camarillo, California, and California Department of Fish and Game, Sacramento.

Thorngate, N.and M. Parsons. 2005. Rufous-crowned Sparrow (*Aimophila ruficeps*) in The Coastal Scrub and Chaparral Bird Conservation Plan: a strategy for protecting and managing coastal scrub and chaparral habitats and associated birds in California. California Partners in Flight. http://www.prbo.org/calpif/htmldocs/scrub.html

Unitt, Philip. 2004. San Diego County Bird Atlas. Proceedings of the San Diego Society of Natural History. No. 39, October 31.

HELIX
Environmental Planning

University of San Diego Master Plan Update and Conditional Use Permit

Archaeological Resource Report Form

November 2015

Mary Robbins-Wade
Director of Cultural Resources

Nicole Falvey
Staff Archaeologist

Prepared for:
MW Steele Groupt
1805 Newton Avenue, Suite A
San Diego, CA 92113

Prepared by:
HELIX Environmental Planning, Inc.
7578 El Cajon Boulevard
La Mesa, CA 91942

ARCHAEOLOGICAL RESOURCE REPORT FORM: UNIVERSITY OF SAN DIEGO MASTER PLAN UPDATE AND CONDITIONAL USE PERMIT SAN DIEGO, CALIFORNIA

Submitted to:

City of San Diego
Development Services Department
1222 First Avenue
San Diego, CA 92101

Prepared for:

MW Steele Group
1805 Newton Avenue, Suite A
San Diego, CA 92113

Prepared by:

HELIX Environmental Planning, Inc.
7578 El Cajon Boulevard
La Mesa, CA 91942

Mary Robbins-Wade, RPA
Director of Cultural Resources

Nicole Falvey
Staff Archaeologist

November 2015

HELIX Project No. MWS-01

USGS quadrangle: La Jolla (7.5' series)
Acreage: Approximately 180 acres
Keywords: Negative archaeological survey; coastal mesa; City of San Diego, San Diego County; Township 16 South, Range 3 West, unsectioned; CA-SDI-11021 (not found in project area)

This report form shall be used when a site-specific survey for historical resources was completed and no archaeological resources were identified within the project area (Area of Potential Effect [APE]). This form may be used, rather than completion of an Archaeological Resource Management Report, when archaeological resources were identified and, based on an evaluation, were determined to be non-significant or are potentially significant but will not be directly impacted by the proposed development project. Completion of the required site-specific survey and this report form must conform to the Historical Resources Guidelines of the Land Development Manual.

I. PROJECT DESCRIPTION AND LOCATION

(Include the geographic limits of the study area and a description of the proposed development project).

Project Location

The University of San Diego (USD) campus occupies approximately 180 acres of land devoted to university-related uses in the central portion of the City of San Diego (City), in the community of Linda Vista. The campus is located 4 miles north of downtown San Diego, approximately 0.5 mile east of Interstate 5 (I-5) and 0.5 mile north of Interstate 8 (I-8) (Figures 1 through 3). The USD campus is located within an unsectioned area of Township 16 South, Range 3 West, on the U.S. Geological Survey (USGS) 7.5-minute La Jolla quadrangle map. Tecolote Canyon Natural Park forms the northern border of the property; Morena Boulevard is located to the west, with Via Las Cumbres bordering the campus on the east, and Linda Vista Road to the south. Elevations on campus range from approximately 50 feet above mean sea level (AMSL) to approximately 260 feet AMSL. With the exception of the steep, north-facing slopes along the northern campus border and the slopes on the western end of campus near Marian Way, the majority of the campus is developed and supports university facilities (buildings, parking lots, athletic fields, etc.) and associated landscaping.

Surrounding land uses include commercial/industrial development and residential housing in the Morena Boulevard area to the west of the campus, student and non-student multi-family housing immediately to the south and various types of residential development to the east. Tecolote Canyon Natural Park contains undeveloped regional open space to the north. The City's Multi-habitat Planning Area (MHPA) occurs on approximately 7.6 acres along the northern edge of the campus and extends offsite into Tecolote Canyon. The campus is located within the Airport Influence Area (AIA) for San Diego International Airport and Montgomery Field.

Project Description

In 1996, USD received approval of its existing Master Plan to guide the phased buildout of the campus through the year 2030. The City issued Conditional Use Permit (CUP)/Resource Protection Ordinance (RPO) Permit No. 92-0568 to allow the campus to construct 23 conceptual projects and expand student population to 7,000 full-time equivalent (FTE). Two future study areas were also identified in the Master Plan. The sequence of the projects was not determined at

that time in order to provide flexibility with regard to economics and academic needs. The 1996 Master Plan EIR was prepared to assess the short- and long-term, as well as cumulative, impacts of implementing the Master Plan and was certified in conjunction with the CUP approvals.

The Master Plan is a document that records the vision and goals of the physical campus. This vision for the campus is updated from time to time to reflect the changes in demographics and the economy that affect higher education. Most importantly, the Master Plan is required by the City as the basis for the university's CUP and to ensure the University's fulfillment of current regulations. Over the last several years, USD campus officials have been conducting vision planning and space planning exercises to address the future needs of the university. An update to the existing Master Plan is now proposed.

The proposed USD Master Plan Update provides a comprehensive revision of the 1996 Master Plan and Design Guidelines, as well as the campus' building space and infrastructure needs associated with increasing enrollment from 7,000 FTE to 10,000 FTE students over the next 20+ years. The USD Master Plan Update project would allow for the development of academic core/student service/support uses and athletics and recreation uses, and additional student housing. Parking supply expansions would also occur under the proposed Master Plan Update.

Among the projects outlined in the Master Plan Update are 14 proposed construction sites, as well as 16 approved projects identified in the 1996 Master Plan EIR that have previous City review/approvals but remain unbuilt. The 14 proposed project sites would allow for the construction of academic/administrative buildings, student housing, student services uses, athletics/athletic support/administrative buildings, parking, pedestrian circulation and landscape improvements not contemplated in the 1996 Master Plan and related EIR (Figure 4). Design guidelines contained in the Master Plan Update would provide a comprehensive design framework to guide campus development. Other elements of the Master Plan Update address the planning context of the campus, provide an enrollment and space analysis, and identify sustainability goals.

The above-described improvements would require the following entitlements: an amended CUP to allow for the continued institutional use, a Site Development Permit (SDP) to allow impacts to Environmentally Sensitive Lands (ESL), and MHPA Boundary Line Correction to shift developed land out of the Multiple Species Conservation Program (MSCP) preserve.

II. SETTING

Natural Environment (Past and Present)

The project area is in the coastal plains of San Diego County, where the climate is characterized as "semi-arid, cool" (Griner and Pryde 1976: Figure 3.4). The project site is 0.5 mile east of Mission Bay and an equal distance to the north of the current course of the San Diego River. The southern curve of Tecolote Canyon forms a portion of the northern campus boundary. Average January minimum daily temperatures in the Linda Vista area are about 44° Fahrenheit (F), while average July maximum daily temperatures are about 75°F (Griner and Pryde 1976).

Geologically, the project area is underlain by the Quaternary Lindavista Formation and the Tertiary Scripps Formation (Kennedy 1975). The project site and surrounding areas are mapped as primarily Olivenhain-Urban land complex and Huerhuero-Urban land complex. The Olivenhain soil series consists of cobbly loams with a subsoil of cobbly clay that form in old gravelly and cobbly alluvium. The Huerhuero soil series is typified by loam with a clay subsoil. Small pockets of soil from the Redding-Urban complex and Terrace escarpments are also present on and near the project area; the terrace escarpments are located within Tecolote Canyon Natural Park just north of campus. The onsite soil has been greatly disturbed by cutting and filling, and thus the soil series present are mixed with urban fill consisting of cobbly loam, cobbly alluvium, clay loam, and sandy marine sediments (Bowman 1973).

Water would have been available to Native populations from seasonal drainages in the vicinity, including Tecolote Creek, and from the San Diego River. Vegetation communities mapped in the undeveloped portions of the campus and within Tecolote Canyon include Diegan coastal sage scrub and southern mixed chaparral, with some areas of southern willow scrub and southern riparian forest. The Tecolote Canyon Natural Park Natural Resource Management Plan (HELIX Environmental Planning, Inc. [HELIX] 2006) indicates that historically, oak riparian forest likely occurred along the intermittent (seasonal) drainage of the canyon and its tributaries; urban runoff has led to more water in these drainages and more mesic (moisture-associated) flora adjacent to them. These vegetation communities include numerous plant species that were used by the native people for food, medicine, tools, shelter, ceremonial and other uses (Christenson 1990; Hedges and Beresford 1986). Many of the animal species found in these vegetation communities would have been used by native populations as well. The proximity to open coast, bay, and upland habitats would have provided native populations with a variety of plant resources, as well as a range of animal species (small and large mammals, birds, reptiles, fish, and shellfish).

Ethnography/History

Several summaries discuss the prehistory of San Diego County and provide a background for understanding the archaeology of the general area surrounding the project. Moratto's (1984) review of the archaeology of California contains important discussions of southern California, including the San Diego area, as does a relatively recent book by Neusius and Gross (2007). Bull (1983, 1987), Carrico (1987), Gallegos (1987), and Warren (1985, 1987) provide summaries of archaeological work and interpretations, and another paper (Arnold et al. 2004) discusses advances since 1984. For a brief discussion of the culture history of the San Diego region, see Attachment D.

The project area is within lands that have traditionally been inhabited by the Kumeyaay people, also known as Diegueño or Ipai/Tipai (Luomala 1978). Two ethnohistoric village sites associated with Mission San Diego de Alcala existed in Mission Valley: Cosoy (or Kosoi), at the foot of Presidio Hill, and Nipaquay, near the Mission (Carrico 1993). Two sites were recorded in the Old Town area by Nelson in 1918 as "old rancheria" sites. CA-SDI-41 was recorded based on information from local residents. "This village seems to have been of some size, the inhabitants numbering over 1,000; and according to reports the village was found here by the early Spanish invaders and is said to have continued its existence down to within times in the memory of those still living" (site record, on file at South Coastal Information Center [SCIC]). Nelson found no evidence of the site, but noted that flooding could easily have obscured cultural

material. CA-SDI-52 was recorded by Nelson as well. "There is here a cultivated town block with an old Indian cemetery in one corner. The man who cultivates this ground said that he had plowed up several mortars, etc., on the place; and other informants state that the site was once occupied by an Indian village of 300 inhabitants" (site record, on file at SCIC). These two sites are in relative proximity to each other and may both represent portions of the ethnohistoric village of Cosoy (Kosoi).

The ethnohistoric village La Rinconada de Jamo was located in the area that is now I-5 and Garnet Avenue, extending over many acres. The village was called Rinconada (Spanish for "corner") by Gaspár de Portolá and his party in July 1769. "In later years of the mission period, circa 1769-1832, Rinconada appeared frequently in mission records and other Spanish documents" (Carrico 1977:33). Mission records give the Spanish names of Rincon and Rinconada for the village, as well as the Kumeyaay names Jamio, Japmo, and Jamo (Carrico 1977). The USD Master Plan project site is in relative proximity to all of these habitation sites, although none are in close proximity to the project area.

In her introduction to the autobiography of Delfina Cuero, Shipek wrote that, around 1900, many Diegueño Indians (Kumeyaay) lived in Mission Valley and in various other places around San Diego, including "at the foot of Rose Canyon, along Ocean Beach, around the edge of Mission Bay (False Bay), and all up and down Mission Valley. Each of these locations has been corroborated independently by non-Indian 'old timers' in San Diego" (Shipek 1970:9).

The project site is located in the Linda Vista neighborhood of the City. Historically, Linda Vista was developed as the largest of the defense housing projects for World War II, boasting the development of "3000 houses in 300 days" (Elgin 1942, cited in Taschner 1982) and increasing San Diego's population by 50 percent in a single year. The 1200-acre site of Linda Vista was chosen for this development because of its proximity to local aircraft manufacturers, which employed the majority of San Diegans and enhanced the population boom (Taschner 1982). Thus, Linda Vista was transformed from a scenic mesa top on the outskirts of the city to the mass-produced and tightly packed metropolis that exists today.

USD was established soon after this housing boom. It began as two separate institutions: the College for Women and the College for Men and School of Law. The College for Women was established by the Society of the Sacred Heart and Mother Rosalie Clifton Hill in 1949. The original campus was called Alcalá Park. The College for Men and School of Law began classes in 1954. The College for Men buildings included Serra and De Sales Halls, while the Law School occupied Moore Hall (now called Warren Hall) and the Knights of Columbus library. In 1957, Immaculate Heart Major Seminary and St. Francis Minor Seminary were moved into their newly completed facility, De Sales Hall, now known as Maher Hall. For nearly two decades, these schools co-existed on Alcalá Park, until they merged in 1972 to form USD. The Chancery building (now Hughes Center) and the Immaculata church were a part of the Catholic Diocese of San Diego. The Chancery building was acquired by USD from the Diocese in the 1990s and now serves as an administration building. The Immaculata church remains the property of the Diocese. The seminary relocated to property to the east of campus and De Sales Hall became Maher Hall in the mid-1990s. Since that time there have been numerous and continued expansions throughout the campus.

III. AREA OF POTENTIAL EFFECT (APE)

(Describe the nature and extent of anticipated direct, indirect and cumulative impacts).

The APE is defined as the entire Master Plan area; however, as shown in Figures 3 and 4, much of the campus is already developed, and only select areas are proposed for additional campus development under the Master Plan Update. Although approved projects are contained within the Master Plan and their sites have yet to be developed, they have already received review by the City, and their direct and indirect impacts are not readdressed in this study.

IV. STUDY METHODS

(Include a description of the specific methods used in the identification and evaluation of archaeological resources for this study).

A records search of a one-mile radius and a review of in-house records search data obtained from the SCIC for previous projects in the vicinity were conducted. The Native American Heritage Commission (NAHC) was contacted on April 30, 2015 for a Sacred Lands File search and list of tribal contacts. Letters were sent to the contacts listed by the NAHC on May 18, 2015. Historic maps and aerial photographs were reviewed to assess the potential for historic archaeological resources.

A cultural resources survey was undertaken to determine whether cultural and historical resources are present within the project site. The pedestrian survey was conducted on May 22, 2015 by HELIX field director Andrew Giletti and Red Tail Monitoring and Research, Inc. (Red Tail) Native American monitor Gabe Kitchen. There was very little undeveloped space to survey, due to the extent of buildings, hardscape, and landscape on the campus. The two least modified areas were steep slopes located in the western half of the property, one just east of the entrance kiosk and the other in the northwest corner of campus; the latter area exhibited unusual flatness and thus was likely graded in the past. These areas were walked in 10-meter (m) parallel transects. All other areas of campus, such as sports fields, planting beds, maintenance yards, manufactured slopes, canyon slopes, and any other area devoid of vegetation, were examined carefully for cultural constituents.

No historic structures evaluation was undertaken for the current cultural resources study due to the long-term nature of the Master Plan implementation. As shown in Attachment E, there are over 20 buildings and structures on campus that are at least 45 years old. Several potentially historic buildings are adjacent to projects proposed under the Master Plan and CUP and one is within a proposed project site; these buildings will be addressed on a project-specific basis as individual projects move forward for review and specific design information is available.

V. RESULTS OF STUDY

Background Research

Records Search

The record search and review of in-house records showed that numerous resources, including archaeological sites and historic addresses, are known within the one-mile records search radius. A total of 89 cultural resources are recorded within the search radius. Many of the sites are located in Old Town, a significant historic area of San Diego, and many others are along the San Diego River; both areas are less than a mile south of the project property. Five sites are located north of the Master Plan area, four of which are within Tecolote Canyon: CA-SDI-11021 (P-37-011021), CA-SDI- 19237 (P-37-030187), CA-SDI-19238 (P-37-030188), and CA-SDI-20786 (P-37-032901). One of these resources is mapped as partially within the project property, as described below. One site is recorded to the west, near Mission Bay (CA-SDI-12453/ P-37-012453).

Site CA-SDI-11021 (P-37-011021) is mapped as extending a short distance into the USD campus. The site consists of a shell scatter with two areas of concentration and no associated artifacts or features. The site is described as located along an access road in Tecolote Canyon and is mainly mapped outside the Master Plan area. However, the southernmost part of the northeastern concentration is mapped as extending into the northernmost corner of the project area. The site record noted that the shell might be a natural deposit, but since no subsurface testing has been conducted this remains uncertain.

Site CA-SDI-20786 (P-37-032901) is located along a hiking trail within Tecolote Canyon Natural Park. It consists of a sparse shell scatter and one lithic scraper. CA-SDI-19237 (P-37-030187) is located on the western perimeter of Tecolote Canyon and consists of a small lithic scatter. CA-SDI-19238 (P-37-030188) is located in southwestern Tecolote Canyon and consists of two historic features, both small concrete building foundations.

The map of historic addresses provided by the SCIC indicates that 153 historic addresses are within the search radius, with one resource located just south of Linda Vista Drive from the project property. The building at 5961 Linda Vista Drive is listed as a rehabilitation of a Kirby Johnson property; however, there is no report associated with this address on file, and no further information is available.

A total of 173 reports have been completed within the search radius. Of these, five reports covered the project property (Brandes 1996; Carmack and Hansen 2006; City of San Diego 1996; Cupples 1975; Polan 1981). None of these reports recorded any archaeological resources.

Sacred Lands File Search and Native American Correspondence

The results of the Sacred Lands File search showed that as of May 14, 2015, there is no record of Native American cultural resources within the project area. Letters regarding the project were sent on May 18, 2015 to the tribal contacts identified by the NAHC. The Viejas Band of

Kumeyaay Indians (Viejas) responded that the project area has cultural ties to Viejas, and they requested that a Kumeyaay Cultural Monitor be present during all ground disturbing activities to inform the Band of the inadvertent discovery of cultural material.

Historic Maps and Aerial Photographs

One building with a road/driveway leading to it from Linda Vista Road is shown within the Master Plan area on the 1903 USGS 15' La Jolla quadrangle. This same building appears on the 1930 15' USGS La Jolla map as well. The 1943 USGS 7.5' La Jolla quadrangle shows two buildings on the north side of Linda Vista Road, one of which seems to be the same building shown on the earlier maps; the second building is just west of it. The 1953 7.5' USGS map shows "San Diego University," and the earlier buildings no longer appear. It must be noted that although a building is present on both the 1903 and 1930 USGS maps, no buildings are visible in that area on the 1928 tax factor aerial photograph. Buildings on the south side of Linda Vista Road (outside the project area) that are shown on the USGS topographic maps are visible on the 1928 aerial photograph.

A review of historic aerial photographs of the project site shows that in 1954 most of the Master Plan area remained undeveloped. The Sacred Heart Hall, Founders Hall, and Camino Hall complex that held the College for Women, two tennis courts northwest of this, and another building, likely the present Hughes Administration Center, to the southeast constituted the only development. The southeastern portion of the project area appears to have contained a housing development that was replaced by University buildings by 1964. Development of the property continued steadily over the next three decades with a boom in the 1980s; however, portions of the southwest corner and northern perimeter appear never to have housed buildings.

Historic Structures

As summarized in Table 1, six buildings that are over 45 years old are within or adjacent to proposed projects under the Master Plan Update. In several cases (Founders Hall, Hughes Center, 5701 Josephine Street), the proposed project would have no direct impact to the existing building. In two other instances (Maher Hall, Warren Hall), connections to the existing buildings may be required. The Facilities Management Complex includes at least two buildings that are over 45 years old. No specific plan has been developed for this project site; the University would like the flexibility to use this space for academic/administrative/support facilities. The Master Plan is designed to guide long-term development; thus, details of specific projects under the Master Plan Update have not yet been developed in many cases. Buildings constructed as late as the 1980s will reach the 45-year threshold under the life of this Master Plan. Historic evaluation will be undertaken on a project-specific basis as individual projects are proposed under the Master Plan Update and CUP.

Table 1
CONSTRUCTION DATES,
BUILDINGS WITHIN OR ADJACENT TO MASTER PLAN UPDATE PROJECTS

PROJECT NO.	ADJACENT BUILDING	DATE OF CONSTRUCTION*	COMMENTS
17	NA	NA	No impacts to existing or adjacent buildings
18	West Parking Structure	2002	
19	West Parking Structure	2002	
20	Facilities Management Complex	Ca. 1951	Existing buildings may be replaced by project
21	Founders Hall	1951	Adjacent building not affected by project
22	Hahn School	1978	Adjacent building not affected by project
22	Hughes Center	1952	Adjacent building not affected by project
23	5701 Josephine Street -- not a part of Master Plan Area	By 1964	Adjacent building not affected by project
24	Maher Hall	1954	Project may require connection to adjacent building
24	Hahn Center	1986	Project may require connection to adjacent building
25	Warren Hall	1953	Project may require connection to adjacent building
25	Pardee Research Center	1988	Project may require connection to adjacent building
26	Loma Hall	1992	Project may require connection to adjacent building
26	Warren Hall	1953	Project may require connection to adjacent building
26	Pardee Research Center	1988	Project may require connection to adjacent building
27	Missions A	1979	To be replaced by project
27	Mission Crossroads	1979	To be replaced by project
27	San Buenaventura	2007	Adjacent building not affected by project
28	NA	NA	No impacts to existing or adjacent buildings
29	NA	NA	No impacts to existing or adjacent buildings
30	Alcala Vista Apartments	1987	Adjacent building not affected by project
30	East Tennis Courts		To be replaced by project
30	Weight Room	1986	To be replaced by project

*Construction dates from Brandes (1996), building list provided by architect, and historic aerial photographs

Field Reconnaissance

Ground visibility was poor during the pedestrian survey, as the majority of the property is highly developed. The undeveloped areas and all areas devoid of vegetation were carefully inspected for cultural resources. Fossilized shell was observed within an undeveloped area east of the entrance kiosk and elsewhere throughout the western half of the campus in association with construction activities or erosional weathering patterns. Due to its fossilized state, the shell is not considered cultural in nature. No other cultural materials were observed.

Site CA-SDI-11021 is mapped as extending a short distance into the campus. As previously addressed, this site was described as a shell scatter with two areas of concentration. While the site is mainly outside the USD campus, a site record update prepared in 2012 shows one of the two concentrations extending partially into the project area. No cultural material was observed in the mapped area of CA-SDI-11021 during the May 2015 survey. Ground visibility was poor in this area, due to vegetation.

Evaluation

One archaeological site is mapped as extending a short distance into the project area; however, no cultural material was observed in that area during the current survey. This shell scatter site, CA-SDI-11021, has never been tested to assess its significance, and the original site record indicates that the shell might not be cultural in nature. The area in which the site is mapped is within the USD campus but outside any proposed projects under the Master Plan Update and CUP. Scatters of fossilized shell were noted in other parts of the campus during the current survey; these are not cultural in nature. No other cultural material has been identified within the Master Plan area. Based on this, the project will have no effect on cultural resources.

As previously noted, no historic structures evaluations were conducted as part of the current study; due to the long-term nature of the Master Plan, buildings constructed as late as the 1980s will reach the 45-year threshold under the life of this Master Plan. There is a potential for significant impacts to buildings adjacent to proposed projects that would be at least 45 years old at the time the individual project is developed.

VI. RECOMMENDATIONS

(Include recommendations for mitigation of significant indirect and cumulative impacts and monitoring, as appropriate).

No archaeological material has been identified within the project site. Therefore, no impacts to cultural resources are anticipated. Given the cultural sensitivity of the general area, the poor ground visibility during the survey, and the request by Viejas for a Native American monitor, it is recommended that ground-disturbing activities (brushing/grubbing, grading, trenching, excavation) be monitored by an archaeologist and a Native American monitor. If observation of the initial grading activities indicates there is no potential for cultural resources, monitoring would be discontinued. Termination of monitoring would be determined by agreement among

the archaeological principal investigator, the Native American monitor, and City staff. The monitoring requirements would follow standard City monitoring protocols, as detailed in Attachment F.

There are a number of buildings of historic age on campus, several of which are within or adjacent to proposed projects under the Master Plan, resulting in the potential for significant impacts. For any future projects that propose additions or modifications to structures greater than 45 years old, a historic resources evaluation of the project design shall be conducted that demonstrates it is consistent with the Secretary of the Interior's Standards for the Treatment of Historic Properties. If the evaluation determines that the project is not consistent with the Standards, the project shall be redesigned or a historic report that evaluates the building's integrity and eligibility under all designation criteria shall be completed. If it is determined that a significant historic resource is present and could be impacted by the project, recommendations for mitigation consistent with the City's Historic Resources Guidelines must be identified. All recommendations shall be incorporated into the future project design.

Evaluations shall not be required if a historic resource has been assessed for CEQA significance or National Register eligibility within the last five years if there has been no change in the conditions that contributed to the determination of significance or eligibility.

VII. SOURCES CONSULTED

SOURCES CONSULTED	DATE	
• National Register of Historic Places	Month and Year:	May 2015
• California Register of Historical Resources	Month and Year:	May 2015
• City of San Diego Historical Resources Register	Month and Year:	May 2015
Archaeological/Historical Site Records:		
• South Coastal Information Center	Month and Year:	May 2015
Other Sources Consulted:		
• Native American Heritage Commission:	Month and Year:	May 2015

VIII. CERTIFICATION

Preparer: Mary Robbins-Wade Title: Director of Cultural Resources

Signature: Mary Robbins-Wade Date: November 16, 2015

Preparer: Nicole Falvey Title: Staff Archaeologist

Signature: Nicole Falvey Date: November 16, 2015

IX. ATTACHMENTS

A National Archaeological Data Base Information

B Bibliography

C Maps/Figures

- Regional Location
- U.S.G.S. Quadrangle
- Project Maps (Delineate area of actual survey of Project Map, or largest scale map available)

D Culture History

E Building Report – Architect

F Standard Mitigation Measures

Confidential Appendices:

A Records Search Maps

B Location of CA-SDI-11021 in Relation to Master Plan Area

THIS PAGE INTENTIONALLY LEFT BLANK

Attachment A

NATIONAL ARCHAEOLOGICAL DATA BASE INFORMATION

NATIONAL ARCHAEOLOGICAL DATA BASE INFORMATION

Authors:	Mary Robbins-Wade and Nicole Falvey
Consulting Firm:	HELIX Environmental Planning, Inc., 7578 El Cajon Blvd., La Mesa, CA 91942, (619) 462-1515
Report Date:	November 2015
Report Title:	Archaeological Resource Report Form: University of San Diego Master Plan, San Diego, CA
Submitted to:	City of San Diego, Development Services, 1222 First Avenue, San Diego, CA 92101, (619) 446-5000
Prepared for:	MW Steele Group, 1805 Newton Avenue, Suite A, San Diego, CA 92113, (619) 230-0325
Contract number:	HELIX Project No. MWS-01
USGS quadrangles:	La Jolla (7.5' series)
Acreage:	Approximately 180 acres
Keywords:	Negative archaeological survey; coastal mesa; City of San Diego, San Diego County; Township 16 South, Range 3 West, unsectioned; CA-SDI-11021 (not found in project area)

THIS PAGE INTENTIONALLY LEFT BLANK

Attachment B

BIBLIOGRAPHY

BIBLIOGRAPHY

Arnold, J.E., M.R. Walsh, and S.E. Hollimon.
2004 Archaeology of California. Journal of Archaeological Research 12:1-73.

Bowman, Roy H.
1973 *Soil Survey, San Diego Area, California, Part I*. United States Department of Agriculture, Beltsville, MD.

Brandes, Ray
1996 Appendix E: *Cultural Resources Report for the Proposed USD Master Plan EIR*. Lettieri-McIntyre and Associates, San Diego. Report on file at the South Coastal Information Center, San Diego State University.

Bull, Charles S.
1983 Shaking the Foundations: The Evidence for San Diego Prehistory. *Casual Papers: Cultural Resource Management* 1(3):15-64. Cultural Resource Management Center, San Diego State University.

1987 A New Proposal: Some Suggestions for San Diego Prehistory. In *San Dieguito-La Jolla: Chronology and Controversy*, edited by Dennis Gallegos, pp. 35-42. San Diego County Archaeological Society, Research Paper 1.

Carmack, Shannon and Janet Hansen
2006 *Cultural Resource Assessment for Verizon Wireless Remote Facility, City and County of San Diego*. LSA. Report on file at the South Coastal Information Center, San Diego State University.

Carrico, Richard L.
1977 Portolá's 1769 Expedition and Coastal Native Villages of San Diego County. The Journal of California Anthropology 4(1):31-41.

1987 Sixty-five Years of San Diego County Archaeology. In *San Dieguito-La Jolla: Chronology and Controversy*, edited by Dennis Gallegos, pp. 1-14. San Diego County Archaeological Society, Research Paper 1.

1993 Ethnohistoric Period. In *Draft Historic Properties Background Study for the City of San Diego Clean Water Program*, pp. V-1--V-24. Brian F. Mooney Associates, San Diego. Report submitted to City of San Diego, Clean Water Program for Greater San Diego.

Christenson, Lynne E.
1990 *The Late Prehistoric Yuman People of San Diego County, California: Their Settlement and Subsistence System*. Ph.D. dissertation, Department of Anthropology, Arizona State University, Tempe. University Microfilms, Ann Arbor.

City of San Diego
1996 *Draft Environmental Impact Report for the University of San Diego. City of San Diego*. Report on file at the South Coastal Information Center, San Diego State University.

Cupples, Sue Ann
1975 *An Archaeological Survey of the San Diego River Valley*. Sue Ann Cupples. Report on file at the South Coastal Information Center, San Diego State University.

Elgin, Elizabeth
1942 Boom-town Library – Linda Vista. *Wilson Library Bulletin*. 16 (9): 705-710.

Gallegos, Dennis
1987 A Review and Synthesis of Environmental and Cultural Material for the Batiquitos Lagoon Region. In *San Dieguito-La Jolla: Chronology and Controversy*, edited by Dennis Gallegos, pp. 23-34. San Diego County Archaeological Society, Research Paper 1.

Griner, E. Lee, and Philip R. Pryde
1976 Climate, Soils, and Vegetation. In *San Diego: An Introduction to the Region*, edited by Philip R. Pryde, pp. 29-46. Kendall/Hunt Publishing Company, Dubuque, Iowa.

Hedges, Ken, and Christina Beresford
1986 *Santa Ysabel Ethnobotany*. San Diego Museum of Man Ethnic Technology Notes No. 20.

HELIX Environmental Planning, Inc. (HELIX)
2006 *Tecolote Canyon Natural Park Natural Resource Management Plan*. HELIX Environmental Planning, Inc. La Mesa. Report submitted to City of San Diego Development Services Department. Report on file at HELIX.

Kennedy, Michael P.
1975 *Geology of the San Diego Metropolitan Area, California, Section A Western San Diego Metropolitan Area*. California Division of Mines and Geology, Sacramento.

Luomala, Katherine
1978 Tipai-Ipai. In *California*, edited by Robert F. Heizer, pp. 592-609. *The Handbook of North American Indians*, vol. 8, William C. Sturtevant, general editor. Smithsonian Institution, Washington, D.C.

Moratto, Michael J.
1984 *California Archaeology*. Academic Press, Orlando.

Polan, H. Keith

1981 *Site Eighteen: An Archaeological Reconnaissance*. Heritage Environmental Services. Report on file at the South Coastal Information Center, San Diego State University.

Shipek, Florence C.

1970 *The Autobiography of Delfina Cuero, a Diegueño Indian, as told to Florence C. Shipek*. Malki Museum Press, Morongo Indian Reservation, California.

Taschner, Mary

1982 Boomerang Boom: San Diego 1941-1942. *The Journal of San Diego History*. 28 (1). Electronic Document. http://www.sandiegohistory.org/journal/82winter/boom.htm, accessed May 19, 2015.

University of San Diego

2015 History of the University of San Diego. Electronic document. https://www.sandiego.edu/about/history.php, accessed May 19, 2015.

Warren, C.N.

1985 Garbage about the Foundations: A Comment on Bull's Assertions. Casual Papers: Cultural Resource Management 2(1):82-90. Cultural Resource Management Center, San Diego State University, San Diego.

1987 The San Dieguito and La Jolla: Some Comments. In San Dieguito-La Jolla: Chronology and Controversy, edited by D. Gallegos, pp. 73-85. San Diego County Archaeological Society, Research Paper 1.

Winterrowd, Cathy L., and D. Seán Cárdenas

1987 An Archaeological Indexing of a Portion of the Village of La Rinconada de Jamo SDI-5017 (SDM-W-150). RBR & Associates, Inc., San Diego. Report submitted to the City of San Diego, Planning Department. Report on file at South Coastal Information Center, San Diego State University.

THIS PAGE INTENTIONALLY LEFT BLANK

Attachment C

MAPS/FIGURES

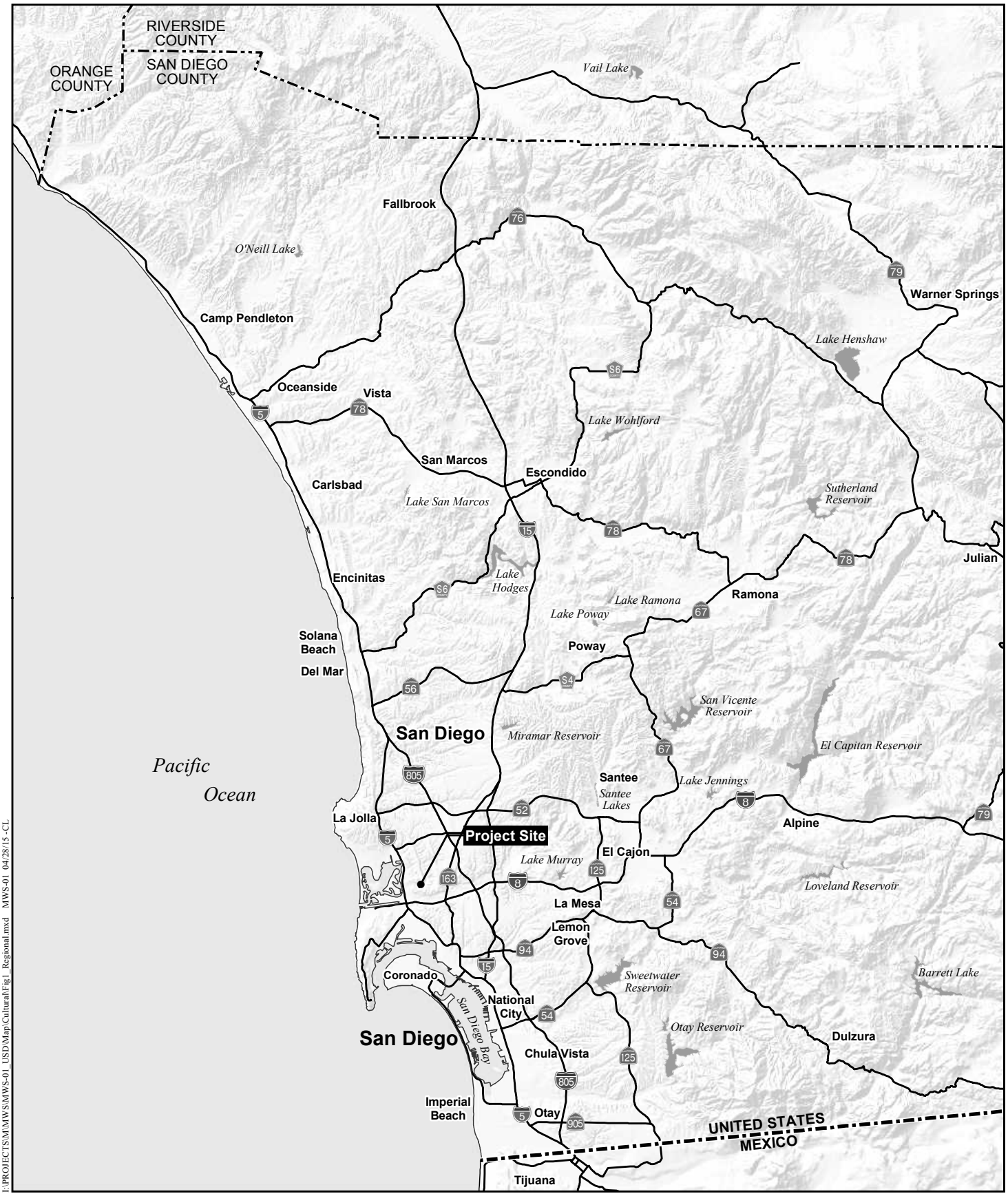

L:\PROJECTS\M\MWS\MWS-01_USD\Map\Cultural\Fig1_Regional.mxd MWS-01 04/28/15 -CL

Regional Location Map

UNIVERSITY OF SAN DIEGO MASTER PLAN UPDATE

HELIX Environmental Planning

N 0 8 Miles

Figure 1

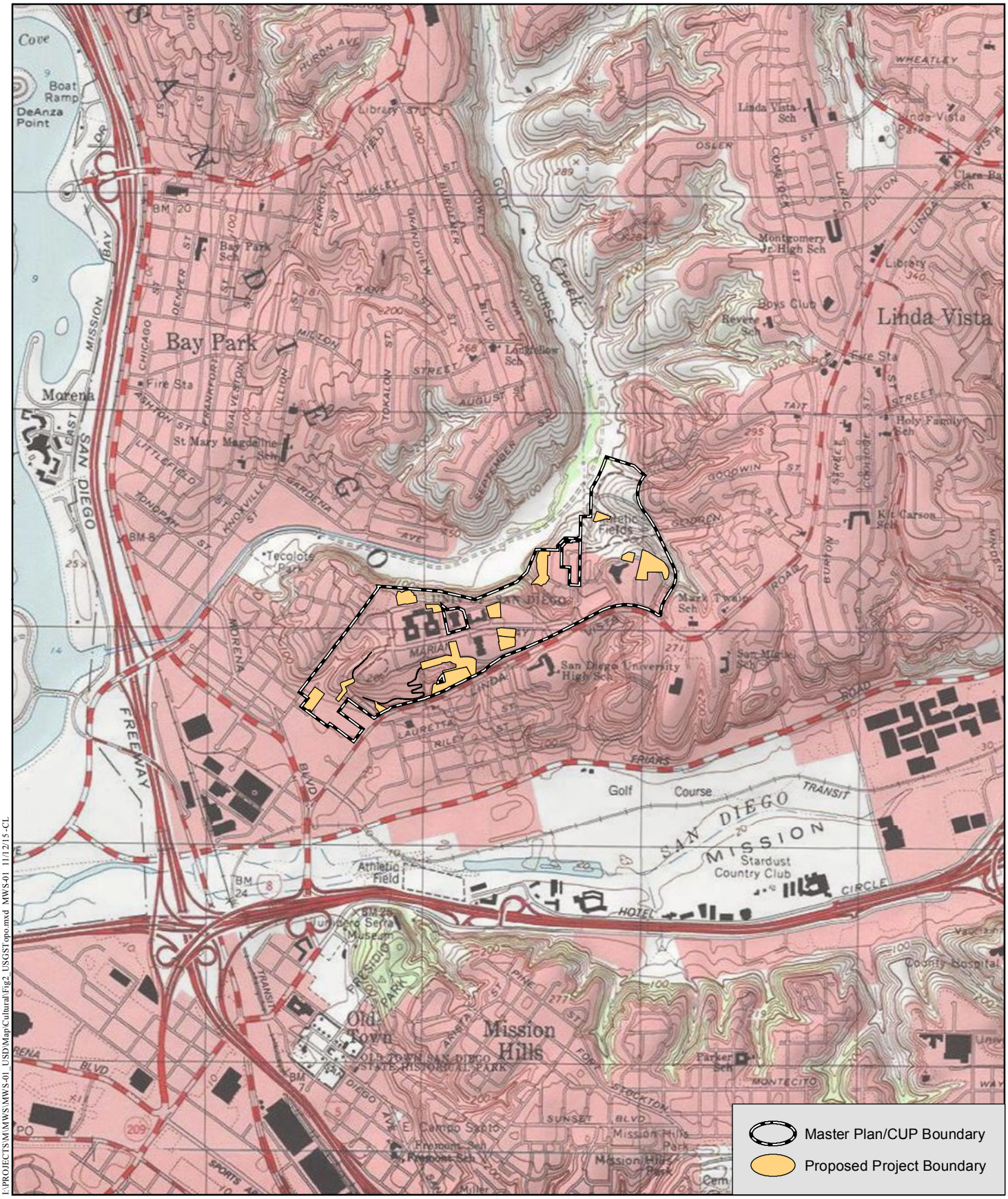

L:\PROJECTS\M\MWS\MWS-01_USD\Map\Cultural\Fig2_USGSTopo.mxd MWS-01 11/12/15-CL

Project Vicinity (USGS Topography)

UNIVERSITY OF SAN DIEGO MASTER PLAN UPDATE

HELIX Environmental Planning

N 0 2,000 Feet

Figure 2

I:\PROJECTS\M\MWS\MWS-01 USD\Map\Cultural\Fig3_Aerial.mxd MWS-01 11/12/15 -CL

Aerial Photograph

UNIVERSITY OF SAN DIEGO MASTER PLAN UPDATE

HELIX Environmental Planning

0 500 Feet

Figure 3

Legend

Project Number

Existing Building

Proposed Project

Source: M.W. Steele Group, Inc. 2015

I:\PROJECTS\M\MWS\MWS-01_USD\Map\Cultural\Fig4_ProjectPlan.indd MWS-01 06/02/15 -C1

Project Plan

UNIVERSITY OF SAN DIEGO MASTER PLAN UPDATE

Figure 4

HELIX Environmental Planning

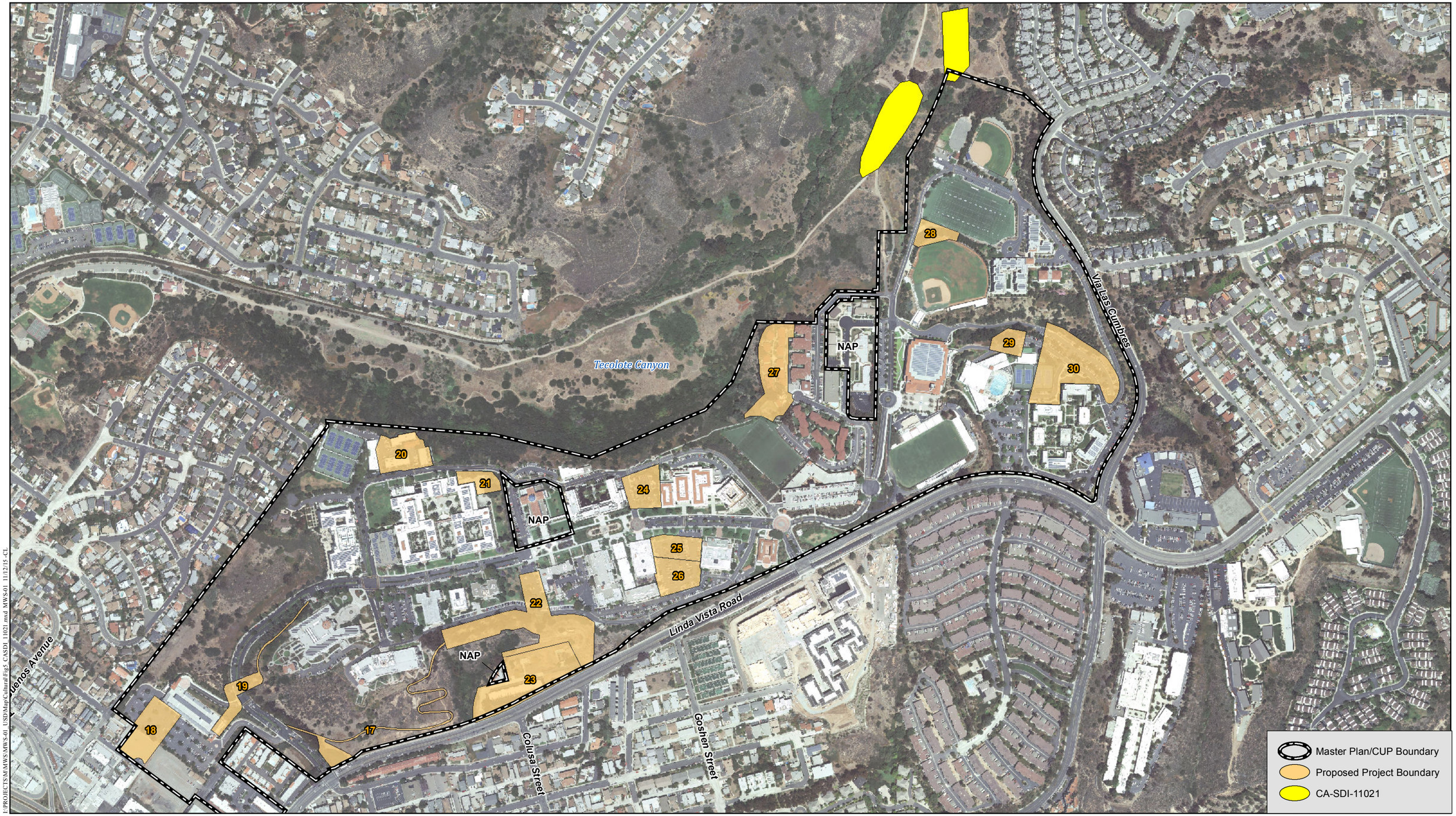

I:\PROJECTS\M\MWS\MWS-01_USD\Map\Cultural\Fig5_CASDI_11021.mxd MWS-01 11/12/15 -CL

Location of CA-SDI-11021 in Relation to Master Plan Area

UNIVERSITY OF SAN DIEGO MASTER PLAN UPDATE

HELIX Environmental Planning

N 0 500 Feet

Figure 5

Attachment D

CULTURE HISTORY

GENERAL CULTURE HISTORY

Several summaries discuss the prehistory of San Diego County and provide a background for understanding the archaeology of the general area surrounding the project. Moratto's (1984) review of the archaeology of California contains important discussions of Southern California, including the San Diego area, as does a relatively recent book by Neusius and Gross (2007). Bull (1983, 1987), Carrico (1987), Gallegos (1987), and Warren (1985, 1987) provide summaries of archaeological work and interpretations, and another paper (Arnold et al. 2004) discusses advances since 1984. The following is a brief discussion of the culture history of the San Diego region.

Carter (1957, 1978, 1980), Minshall (1976) and others (e.g., Childers 1974; Davis 1968, 1973) have long argued for the presence of Pleistocene humans in California, including the San Diego area. The sites identified as “early man” are all controversial. Carter and Minshall are best known for their discoveries at Texas Street and Buchanan Canyon. The material from these sites is generally considered nonartifactual, and the investigative methodology is often questioned (Moratto 1984).

The earliest accepted archaeological manifestation of Native Americans in the San Diego area is the San Dieguito complex, dating to approximately 10,000 years ago (Warren 1967). The San Dieguito complex was originally defined by Rogers (1939), and Warren published a clear synthesis of the complex in 1967. The material culture of the San Dieguito complex consists primarily of scrapers, scraper planes, choppers, large blades, and large projectile points. Rogers considered crescentic stones to be characteristic of the San Dieguito complex as well. Tools and debitage made of fine-grained green metavolcanic material, locally known as felsite, were found at many sites that Rogers identified as San Dieguito. Often these artifacts were heavily patinated. Felsite tools, especially patinated felsite, came to be seen as an indicator of the San Dieguito complex. Many archaeologists have felt that the San Dieguito culture lacked milling technology and saw this as an important difference between the San Dieguito and La Jolla complexes. Sleeping circles, trail shrines, and rock alignments have also been associated with early San Dieguito sites. The San Dieguito complex is chronologically equivalent to other Paleoindian complexes across North America, and sites are sometimes called “Paleoindian” rather than “San Dieguito.” San Dieguito material underlies La Jolla complex strata at the C.W. Harris site in San Dieguito Valley (Warren, ed. 1966).

The traditional view of San Diego prehistory has the San Dieguito complex followed by the La Jolla complex at least 7000 years ago, possibly as long as 9000 years ago (Rogers 1966). The La Jolla complex is part of the Encinitas tradition and equates with Wallace's (1955) Millingstone Horizon, also known as Early Archaic or Milling Archaic. The Encinitas tradition is generally “recognized by millingstone assemblages in shell middens, often near sloughs and lagoons” (Moratto 1984:147). “Crude” cobble tools, especially choppers and scrapers, characterize the La Jolla complex (Moriarty 1966). Basin metates, manos, discoidals, a small number of Pinto series and Elko series points, and flexed burials are also characteristic.

Warren et al. (1961) proposed that the La Jolla complex developed with the arrival of a desert people on the coast who quickly adapted to their new environment. Moriarty (1966) and

Kaldenberg (1976) have suggested an in situ development of the La Jolla people from the San Dieguito. Moriarty has since proposed a Pleistocene migration of an ancestral stage of the La Jolla people to the San Diego coast. He suggested this Pre-La Jolla complex is represented at Texas Street, Buchanan Canyon, and the Brown site (Moriarty 1987).

Since the 1980s, archaeologists in the region have begun to question the traditional definition of San Dieguito people simply as makers of finely crafted felsite projectile points, domed scrapers, and discoidal cores, who lacked milling technology. The traditional defining criteria for La Jolla sites (manos, metates, "crude" cobble tools, and reliance on lagoonal resources) have also been questioned (Bull 1987; Cárdenas and Robbins-Wade 1985; Robbins-Wade 1986). There is speculation that differences between artifact assemblages of "San Dieguito" and "La Jolla" sites reflect functional differences rather than temporal or cultural variability (Bull 1987; Gallegos 1987). Gallegos (1987) has proposed that the San Dieguito, La Jolla, and Pauma complexes are manifestations of the same culture, with differing site types "explained by site location, resources exploited, influence, innovation and adaptation to a rich coastal region over a long period of time" (Gallegos 1987:30). The classic "La Jolla" assemblage is one adapted to life on the coast and appears to continue through time (Robbins-Wade 1986; Winterrowd and Cárdenas 1987). Inland sites adapted to hunting contain a different tool kit, regardless of temporal period (Cárdenas and Van Wormer 1984).

Several archaeologists in San Diego, however, do not subscribe to the Early Prehistoric/Late Prehistoric chronology (see Cook 1985; Gross and Hildebrand 1998; Gross and Robbins-Wade 1989; Shackley 1988; Warren 1998). They feel that an apparent overlap among assemblages identified as "La Jolla," "Pauma," or "San Dieguito" does not preclude the existence of an Early Milling period culture in the San Diego region, whatever name is used to identify it, separate from an earlier culture. One problem these archaeologists perceive is that many site reports in the San Diego region present conclusions based on interpretations of stratigraphic profiles from sites at which stratigraphy cannot validly be used to address chronology or changes through time. Archaeology emphasizes stratigraphy as a tool, but many of the sites known in the San Diego region are not in depositional situations. In contexts where natural sources of sediment or anthropogenic sources of debris to bury archaeological materials are lacking, other factors must be responsible for the subsurface occurrence of cultural materials. The subsurface deposits at numerous sites are the result of such agencies as rodent burrowing and insect activity. A number of studies have emphasized the importance of bioturbative factors in producing the stratigraphic profiles observed at archaeological sites (see Gross 1992). Different classes of artifacts move through the soil in different ways (Bocek 1986; Erlandson 1984; Johnson 1989), creating vertical patterning (Johnson 1989) that is not culturally relevant. Many sites that have been used to help define the culture sequence of the San Diego region are the result of just such nondepositional stratigraphy.

The Late Prehistoric period is represented by the Cuyamaca complex in the southern portion of San Diego County and the San Luis Rey complex in the northern portion of the county. The Cuyamaca complex is the archaeological manifestation of the Yuman forebears of the Kumeyaay people. The San Luis Rey complex represents the predecessors of the ethnohistoric Luiseño people. The name Luiseño derives from Mission San Luis Rey de Francia and has been used to refer to the people associated with that mission, while the Kumeyaay people are also known as

Ipai, Tipai, or Diegueño (named for Mission San Diego de Alcala). Agua Hedionda Creek is often described as the division between the territories of the Luiseño and the Kumeyaay people (Bean and Shipek 1978; Luomala 1978; White 1963), although different ethnographers provide slightly different maps and traditional use area boundaries. The Indian people know their traditional territories and use areas from stories and songs passed down through generations. The subject property is within the ethnographic territory of the Kumeyaay people.

PROJECT VICINITY

The project area is within lands that have traditionally been inhabited by the Kumeyaay people, also known as Diegueño or Ipai/Tipai (Luomala 1978). Two ethnohistoric village sites associated with Mission San Diego de Alcala existed in Mission Valley: Cosoy (or Kosoi), at the foot of Presidio Hill, and Nipaquay, near the Mission (Carrico 1993). Two sites were recorded in the Old Town area by Nelson in 1918 as "old rancheria" sites. CA-SDI-41 was recorded based on information from local residents. "This village seems to have been of some size, the inhabitants numbering over 1000; and according to reports the village was found here by the early Spanish invaders and is said to have continued its existence down to within times in the memory of those still living" (site record, on file at South Coastal Information Center). Nelson found no evidence of the site, but noted that flooding could easily have obscured cultural material. CA-SDI-52 was recorded by Nelson as well. "There is here a cultivated town block with an old Indian cemetery in one corner. The man who cultivates this ground said that he had plowed up several mortars, etc., on the place; and other informants state that the site was once occupied by an Indian village of 300 inhabitants" (site record, on file at South Coastal Information Center). These two sites are in relative proximity to each other and may both represent portions of the ethnohistoric village of Cosoy (Kosoi).

The ethnohistoric village La Rinconada de Jamo was located in the area that is now I-5 and Garnet Avenue and covers many acres (Carrico 1977; Winterrowd and Cárdenas 1987). The village was called Rinconada (Spanish for "corner") by Gaspár de Portolá and his party in July 1769. "In later years of the mission period, circa 1769-1832, Rinconada appeared frequently in mission records and other Spanish documents" (Carrico 1977:33). Mission records give the Spanish names of Rincon and Rinconada for the village, as well as the Kumeyaay names Jamio, Japmo, and Jamo (Carrico 1977). The project site is in relative proximity to all of these habitation sites.

In her introduction to the autobiography of Delfina Cuero, Shipek wrote that around 1900 many Diegueño Indians (Kumeyaay) lived in Mission Valley and in various other places around San Diego, including "at the foot of Rose Canyon, along Ocean Beach, around the edge of Mission Bay (False Bay), and all up and down Mission Valley. Each of these locations has been corroborated independently by non-Indian 'old timers' in San Diego" (Shipek 1970:9).

The project site is located in the Linda Vista neighborhood of the city of San Diego. Historically, Linda Vista was developed as the largest of the defense housing projects for World War II, boasting the development of "3000 houses in 300 days" (Elgin 1942, cited in Taschner 1982) and increasing San Diego's population by 50 percent in a single year. The 1200-acre site of Linda Vista was chosen for this development because of its proximity to local aircraft manufacturers,

which employed the majority of San Diegans and enhanced the population boom (Taschner 1982). Thus, Linda Vista was transformed from a scenic mesa top on the outskirts of the city to the mass produced and tightly packed cityscape that exists today.

The University of San Diego was established soon after this housing boom. It began as two separate institutes: the College for Women and the College for Men and School of Law. The College for Women was established by the Society of the Sacred Heart and Mother Rosalie Clifton Hill in 1949. The original campus was called Alcalá Park and was built to be aesthetically ornate. The College for Men and School of Law was established in 1954. It was housed in nearby Warren Hall (then called Thomas Moore Hall) and soon thereafter constructed other buildings of the modern campus. The two colleges formed the University of San Diego in 1972 (University of San Diego 2015).

REFERENCES

Bocek, Barbara

1986 Rodent Ecology and Burrowing Behavior: Predicted Effects on Archaeological Site Formation. *American Antiquity* 51:589-603.

Bull, Charles S.

1983 Shaking the Foundations: The Evidence for San Diego Prehistory. *Casual Papers: Cultural Resource Management* 1(3):15-64.

1987 A New Proposal: Some Suggestions for San Diego Prehistory. In *San Dieguito-La Jolla: Chronology and Controversy*, edited by D. Gallegos, pp. 35-44. San Diego County Archaeological Society, Research Paper 1.

Cárdenas, D. Seán, and Mary Robbins-Wade

1985 *An Archaeological Investigation of SDM-W-143/146: An Unique Coastal Luiseño Occupation Site in Carlsbad, California*. RBR & Associates, Inc., San Diego. Report submitted to the City of Carlsbad, Planning Department. Report on file at South Coastal Information Center, San Diego State University.

Cárdenas, D. Seán, and Stephen R. Van Wormer

1984 *Archaeological Investigation of SDI-4648 and SDM-W-348*. RBR & Associates, Inc., San Diego. Report submitted to the City of El Cajon, Planning Department. Report on file at South Coastal Information Center, San Diego State University.

Carrico, Richard L.

1977 Portola's 1769 Expedition and Coastal Native Villages of San Diego County. *The Journal of California Anthropology* 4(1):31-41.

1987 Sixty-five Years of San Diego County Archaeology. In *San Dieguito-La Jolla: Chronology and Controversy*, edited by D. Gallegos, pp. 1-14. San Diego County Archaeological Society, Research Paper 1.

1993 *Historic Properties Inventory for the Proposed Bayview Reservoir Expansion Site, San Diego, CA*. Ogden Environmental and Energy Services, San Diego.

Carter, George F.

1957 *Pleistocene Man at San Diego*. Johns Hopkins Press, Baltimore.

1978 An American Lower Paleolithic. *Anthropological Journal of Canada* 16:2-38.

1980 *Earlier Than You Think: A Personal View of Man in America*. Texas A&M University Press, College Station.

Chace, Paul G.
1979 *An Archaeological Assessment of the Bella Pacifica Park Project*. Paul G. Chace & Associates, Escondido, California.

Childers, W. Morlin
1974 Preliminary Report on the Yuha Burial, California. *Anthropological Journal of Canada* 12 (1):2-9.

Cook, John R.
1985 *An Investigation of the San Dieguito Quarries and Workshops near Rancho Santa Fe, California*. Mooney-Lettieri and Associates, San Diego. Report submitted to County of San Diego, Department of Planning and Land Use. Report on file at South Coastal Information Center, San Diego State University.

Davis, E.L.
1968 Early Man in the Mojave Desert. *Eastern New Mexico University Contributions in Anthropology* 1 (4):42-47.

1973 People of the Old Stone Age at China Lake. Ms. on file, Great Basin Foundation, San Diego.

Elgin, Elizabeth
1942 Boom-town Library – Linda Vista. *Wilson Library Bulletin*. 16 (9): 705-710.

Erlandson, Jon M.
1984 A Case Study in Faunalturbation: Delineating the Effects of the Burrowing Pocket Gopher on the Distribution of Archaeological Materials. *American Antiquity* 49:785-790.

Gallegos, Dennis R.
1987 A Review and Synthesis of Environmental and Cultural Material for the Batiquitos Lagoon Region. In *San Dieguito-La Jolla: Chronology and Controversy*, edited by Dennis Gallegos, pp. 23-34. San Diego County Archaeological Society, Research Paper 1.

Gross, G. Timothy
1992 Site Formation and Transformation Processes in Coastal Shell Middens and Shell-Rich Sites. In *Essays on the Prehistory of Maritime California*, edited by Terry L. Jones, pp. 195-204. Center for Archaeological Research at Davis Publications 10, University of California, Davis.

Gross, G. Timothy, and John A. Hildebrand
1998 San Dieguito and La Jolla: Insights from the 1964 Excavations at the C.W. Harris Site. Paper presented at the 32nd Annual Meeting of the Society for California Archaeology, San Diego.

Gross, G. Timothy, and Mary Robbins-Wade

1989 *Archaeological Investigation of SDi-9772 (SDM-W-3411) San Marcos, California*. Affinis, El Cajon. Report submitted to County of San Diego, Department of Planning and Land Use. Report on file at South Coastal Information Center, San Diego State University.

1990 *Archaeological Research Design for Sites SDi-197 and SDi-1103, Los Peñasquitos Lagoon, San Diego, California.* Report submitted to City of San Diego, Planning Department. Report on file at South Coastal Information Center, San Diego State University.

Johnson, Donald L.

1989 Subsurface Stone Lines, Stone Zones, Artifact-Manuport Layers, and Biomantles Produced by Bioturbation Via Pocket Gophers (*Thomomys bottae*). *American Antiquity* 54:370-389.

Kaldenberg, Russell L.

1976 *Paleo-technological Change at Rancho Park North, San Diego County, California*. Unpublished Master's thesis, Department of Anthropology, San Diego State University.

Minshall, Herbert L.

1976 *The Broken Stones*. Copley Books, San Diego.

Moratto, Michael J.

1984 *California Archaeology*. Academic Press, Orlando.

Moriarty, James R., III

1966 Cultural Phase Divisions Suggested By Typological Change Coordinated with Stratigraphically Controlled Radiocarbon Dating in San Diego. *The Anthropological Journal of Canada* 4 (4):20-30.

1987 A Separate Origins Theory for Two Early Man Cultures in California. In *San Dieguito-La Jolla: Chronology and Controversy*, edited by D. Gallegos, pp. 49-60. San Diego County Archaeological Society, Research Paper 1.

Robbins-Wade, Mary

1986 Rising Glen: SDM-W-143/146 (SDI-5213 C & D). *Casual Papers* 2 (2):37-58. Cultural Resource Management Center, San Diego State University, San Diego.

Rogers, Malcolm J.

1939 *Early Lithic Industries of the Lower Basin of the Colorado River and Adjacent Desert Areas*. San Diego Museum of Man Papers No. 3. San Diego Museum of Man, San Diego.

1966 *Ancient Hunters of the Far West*. Union-Tribune Publishing Company, San Diego.

Shackley, M. Steven

1988 *Archaeological Investigations at SDi-5103. A San Dieguito Lithic Workshop, San Diego County, California*. Brian F. Mooney Associates, San Diego.

Taschner, Mary

1982 Boomerang Boom: San Diego 1941-1942. *The Journal of San Diego History*. 28 (1). Electronic Document. http://www.sandiegohistory.org/journal/82winter/boom.htm, accessed May 19, 2015.

University of San Diego

2015 History of the University of San Diego. Electronic document. https://www.sandiego.edu/about/history.php, accessed May 19, 2015.

Wallace, William .J.

1955 A Suggested Chronology for Southern California Coastal Archaeology. *Southwestern Journal of Anthropology* 11:214-230.

Warren, C.N.

1967 The San Dieguito Complex: A Review and Hypothesis. *American Antiquity* 32:168-185.

1985 Garbage about the Foundations: A Comment on Bull's Assertions. *Casual Papers: Cultural Resource Management* 2(1):82-90.

1987 The San Dieguito and La Jolla: Some Comments. In *San Dieguito-La Jolla: Chronology and Controversy*, edited by D. Gallegos, pp. 73-85. San Diego County Archaeological Society, Research Paper 1.

1998 San Dieguito-La Jolla: Chronology and Controversy, Ten Years Later. Discussant in symposium at the 32nd Annual Meeting of the Society for California Archaeology, San Diego.

Warren, C.N. (editor)

1966 *The San Dieguito Type Site: M.J. Rogers' 1938 Excavation on the San Dieguito River*. San Diego Museum Papers No. 5, San Diego Museum of Man.

Warren, C.N., D.L. True, and Ardith A. Eudey
1961 Early Gathering Complexes of Western San Diego County: Results and Interpretations of an Archaeological Survey. In *University of California, Los Angeles Archaeological Survey Annual Report 1960-1961*, pp. 1-106.

Winterrowd, Cathy L., and D. Seán Cárdenas
1987 *An Archaeological Indexing of a Portion of the Village of La Rinconada de Jamo SDI-5017 (SDM-W-150).* RBR & Associates, Inc., San Diego. Report submitted to City of San Diego, Planning Department. Report on file at South Coastal Information Center, San Diego State University.

THIS PAGE INTENTIONALLY LEFT BLANK

Attachment E

BUILDING REPORT - ARCHITECT

Building Report - Architect

Name	Code	Architect	Original Contractor	Completed
1305 Elevation Road	ELV05			
1325 Elevation Road	ELV25			
5225 Cushman Place	CP25			
5231 Cushman Place	CP31			
5251 Cushman Place	CP51			
5259 Cushman Place	CP59			
5705 Josephine Street	JOS05			
5725 Josephine Street	JOS25			
5734 Josephine Street	JOS34			
5735 Josephine Street	JOS35			
5744 Linda Vista Road	LVR44			
5755 Josephine Street	JOS55			
5757 Josephine Street	JOS57			
6556 Glidden Lane	GLI56			
Alcala Park West	APW			
Alcala Park West - Avila	AV	Joseph M. Pisciota		01/01/1982
Alcala Park West - Barcelona	BA	Joseph M. Pisciotta	Unknown	01/01/1982
Alcala Park West - Coronado	CO	Joseph M. Pisciotta	Unknown	01/01/1988
Alcala Park West - Durango	DU			01/01/1982
Alcala Vista - Bike/Storage	AVABK	Schoell & Paul	Menefee / Larson	01/01/1987
Alcala Vista - Borrego Hall (1520)	BOR	Schoell & Paul	Menefee / Larson	01/01/1998
Alcala Vista - Cuyamaca Hall (1506)	CUY06	Schoell & Paul	Menefee / Larson	01/01/1987
Alcala Vista - Cuyamaca Hall (1508)	CUY08	Schoell & Paul	Menefee / Larson	01/01/1987
Alcala Vista - Laguna Hall (1502)	LAG02	Schoell & Paul	Menefee / Larson	01/01/1987
Alcala Vista - Laguna Hall (1504)	LAG04	Schoell & Paul	Menefee / Larson	01/01/1987
Alcala Vista - Palomar Hall (1510)	PAL10	Schoell & Paul	Menefee / Larson	01/01/1987
Alcala Vista - Palomar Hall (1512)	PAL12	Schoell & Paul	Menefee / Larson	01/01/1987
Alcala Vista Apartments	AVA			
Beyster Institute for Nursing Research	BINR			
Bosley Mission Café & Fitness Ctr	CFC			01/01/2007
Camino Hall	CH	Frank L. Hope	Griffith	01/01/1951
Casa de Alcala: President's Home	CA	Frank L Hoper Jr.	Ninteman	01/01/1972
Casa de la Paz	CLP	Carrier Johnson	Rudolph & Sletten	01/01/2000
Casa Del Pueblo Condos #14	CDP14			
Casa Del Pueblo Condos #15	CDP15			
Casa Del Pueblo Condos #16	CDP16			
Casa Del Pueblo Condos #17	CDP17			
Casa Del Pueblo Condos #18	CDP18			
Casa Del Pueblo Condos #19	CDP19			
Casa Del Pueblo Condos #2	CDP02			
Casa Del Pueblo Condos #22	CDP22			
Casa Del Pueblo Condos #25	CDP25			
Casa Del Pueblo Condos #3	CDP03			
Casa Del Pueblo Condos #32	CDP32			
Casa Del Pueblo Condos #33	CDP33			
Casa Del Pueblo Condos #5	CDP05			
Casa Del Pueblo Condos #6	CDP06			
Casa Del Pueblo Condos #8	CDP08			
Central Utility Plant	CUP	Frank L. Hope	Griffith	01/01/1951
Cooling Tower	CT	Schoell & Paul	Menefee / Larson	01/01/1992
Copley Library	CL	Mosher, Drew, Watson & Ferguson	Dunphy	01/01/1984
Degheri Alumni Center	DAC	Wheeler Wimer Blackman & Assoc.		01/01/2004
Degheri Football Office Complex	FBA			
Degheri Football Office Complex #1	FB1	USD		01/01/1997
Degheri Football Office Complex #2	FB2	USD		01/01/2001
Facilities Management Admin	FMA	Roger Leonard	Renna	01/01/1989
Facilities Management Complex	FMC			
Facilities Management Services	FMS	Roger Leonard	Renna	01/01/1961
Facilities Management Shops	FMP	n/a	Dunphy	01/01/1985
Facilities Management Warehouse	FMW	Mosher, Drew, Watson & Ferguson	Douglas Barnhart, Inc.	01/01/1995
Founders Hall	FH	Frank L. Hope	Griffith	01/01/1951
Fowler Park	FPK			02/15/2013
Guadalupe Hall	GH	Engineering Alliance	Dunphy	01/01/1982
Hahn School of Nursing	HSN	Tucker/Sadler & Associates	C.E. Wylie	01/01/1978
Hughes Center	HC	C. J. Paderewki - Leoard/Schoell & Paul (interior Renovation)	Sinner Brother- USSD as General Con	01/01/1952
Immaculata	IM			
Jenny Craig Pavilion	JCP	Mosher Drew Watson Ferguson	Ninteman Construction Co., Inc.	01/01/2000
Kroc Institute for Peace & Justice	KIPJ	Carrier Johnson	Rudolph & Sletten	01/01/2001
Loma Hall	LH	Schoell & Paul	Menefee / Larson	01/01/1992
Maher Hall	MH	Edgar V.Ulrich	Ninteman	01/01/1954
Maher Hall Boiler House	MHB	Edgar V. ulrich	Niteman	01/01/1954
Main Kiosk	MK	Mosher, Drew, Watson & Associates	Niteman	01/01/1998
Manchester Child Development Center	MCD	Brown Leary		01/01/1989
Manchester Conference Center	MCC	Tucker/Sader & Associates	M. H. Golden	01/01/1984

Name	Code	Architect	Original Contractor	Completed
Manchester Valley Trailer	MVT	N/A	N/A	01/01/1999
Manchester Village Apts	MVA			
Manchester Village Building 1	MV1			01/01/2003
Manchester Village Building 2	MV2			01/01/2003
Mission A - San Diego (5927)	5927	Schoell and Paul	M. H. Golden	01/01/1979
Mission A - San Diego (5933)	5933	Schoell and Paul	M. H. Golden	01/01/1979
Mission A - San Diego (5939)	5939	Schoell and Paul	M. H. Golden	01/01/1979
Mission A - San Fernando (5909)	5909	Schoell and Paul	M. H. Golden	01/01/1979
Mission A - San Fernando (5915)	5915	Schoell and Paul	M. H. Golden	01/01/1979
Mission A - San Fernando (5921)	5921	Schoell and Paul	M. H. Golden	01/01/1979
Mission A - San Francisco (5975)	5975	Schoell and Paul	M. H. Golden	01/01/1979
Mission A - San Francisco (5981)	5981	Schoell and Paul	M. H. Golden	01/01/1979
Mission A - San Gabriel (5963)	5963	Schoell and Paul	M. H. Golden	01/01/1979
Mission A - San Gabriel (5969)	5969	Schoell and Paul	M. H. Golden	01/01/1979
Mission A - San Jose (5951)	5951	Schoell and Paul	M. H. Golden	01/01/1979
Mission A - Santa Inez (5957)	5957	Schoell and Paul	M. H. Golden	01/01/1979
Mission A Suites	MSA			
Mission B - San Juan Capistrano	SJC	Schoell & Paul	M. H. Golden	01/01/1981
Mission B - San Luis Obispo	SLO	Schoell & Paul	M. H. Golden	01/01/1981
Mission B - San Miguel Archangel	SMA	Schoell & Paul	M. H. Golden	01/01/1981
Mission B - San Rafael	SRA	Schoell & Paul	M. H. Golden	01/01/1981
Mission B Suites	MSB			
Mission Crossroads	MX	Schoell & Paul	Griffith	01/01/1979
Mission Parking Structure	MPS	Mosher. Drew, Wastson & Associates	Niteman	01/01/1997
Morena Annex	MAX			
Mother Rosalie Hill Hall	MRH	Delawie Wilkes Rodriguez Baker		01/01/2009
Olin Hall	OH	Tucker/Sadler & Associates	M. H. Golden	01/01/1984
Outdoor Areas	OUT			
Pardee Legal Research Center	PLRC	Edgar V.Ulrich / Simpson Gerber & Schulnik	Ninteman	01/01/1953
Presidio Terrace Apartments	PTA	Robert J. Graham		01/01/1969
Print Shop / Purchasing	PS	Edgar V Ulrich	Ninteman	01/01/1960
Sacred Heart Hall	SHH	Frank L. Hope	Griffith	01/01/1951
San Antonio de Padua	SAP	Arevalo & Deardorff	King Capital Corporation	01/01/1965
San Buenaventura	SBV			01/01/2007
Serra Hall	SH	Edgar V. Ulrich	Ninteman	01/01/1956
Shiley Ctr for Science & Technology	SCST	Carrier Johnson	Rudolph Sletten	01/01/2003
Softball Field Restrooms	SBRR			01/01/1985
Sports Center	SC	James G Armstron	Ninteman	01/01/1964
Sports Center Fields	SCF			
Sports Center Weight Room	SCW	Butler Building	Renna	01/01/1985
Student Life Pavilion	SLP			01/01/2010
Torero Stadium Field House	TSF	Jame G. Armstrong	Ninteman	01/01/1963
Torero Stadium Press Box	TSP	Jame G. Armstrong	Ninteman	01/01/2007
Torero Stadium VIP Boxes	TSV	James G. Armstrong	Ninteman	01/01/2007
University Center	UC	Mosher/Drew/Watson/Fergusen	Trepte	01/01/1986
University Terrace Apartments	UTA			
University Terrace Apts (1301)	UTA01	Edgar V. Ulrich	Ninteman	01/01/1960
University Terrace Apts (1309)	UTA09	Edgar V. Ulrich	Ninteman	01/01/1960
University Terrace Apts (1317)	UTA17	Edgar V. Ulrich	Ninteman	01/01/1960
University Terrace Apts (1325)	UTA25	Edgar V. Ulrich	Ninteman	01/01/1960
University Terrace Apts (1333)	UTA33	Edgar V. Ulrich	Ninteman	01/01/1960
University Terrace Apts (1341)	UTA41	Edgar V. Ulrich		01/01/1960
University Terrace Apts (1349)	UTA49	Edgar V. Ulrich		01/01/1960
University Terrace Apts (1357)	UTA57	Edgar V. Ulrich	Ninteman	01/01/1960
Warren Hall	WH	Edgar V. Ulrich	Ninteman	01/01/1953
West Klosk	WK	Mosher, Drew, Watson & Associates	Niteman	01/01/1998
West Parking Structure	WPS	Mosher, Drew, Wastson & Associates	Douglas Barnhart, Inc.	01/01/2002
West Storage Facility North (Coke)	WSFN			
West Storage Facility South (Coke)	WSFS			

Attachment F

STANDARD MITIGATION MEASURES

PRIVATE PROJECTS
HISTORICAL RESOURCES (ARCHAEOLOGY)

I. Prior to Permit Issuance

A. Entitlements Plan Check

1. Prior to issuance of any construction permits, including but not limited to, the first Grading Permit, Demolition Plans/Permits and Building Plans/Permits or a Notice to Proceed for Subdivisions, but prior to the first preconstruction meeting, whichever is applicable, the Assistant Deputy Director (ADD) Environmental designee shall verify that the requirements for Archaeological Monitoring and Native American monitoring have been noted on the applicable construction documents through the plan check process.

B. Letters of Qualification have been submitted to ADD

1. The applicant shall submit a letter of verification to Mitigation Monitoring Coordination (MMC) identifying the Principal Investigator (PI) for the project and the names of all persons involved in the archaeological monitoring program, as defined in the City of San Diego Historical Resources Guidelines (HRG). If applicable, individuals involved in the archaeological monitoring program must have completed the 40-hour HAZWOPER training with certification documentation.
2. MMC will provide a letter to the applicant confirming the qualifications of the PI and all persons involved in the archaeological monitoring of the project meet the qualifications established in the HRG.
3. Prior to the start of work, the applicant must obtain written approval from MMC for any personnel changes associated with the monitoring program.

II. Prior to Start of Construction

A. Verification of Records Search

1. The PI shall provide verification to MMC that a site specific records search (1/4 mile radius) has been completed. Verification includes, but is not limited to a copy of a confirmation letter from South Coastal Information Center, or, if the search was in-house, a letter of verification from the PI stating that the search was completed.
2. The letter shall introduce any pertinent information concerning expectations and probabilities of discovery during trenching and/or grading activities.
3. The PI may submit a detailed letter to MMC requesting a reduction to the ¼ mile radius.

B. PI Shall Attend Precon Meetings

1. Prior to beginning any work that requires monitoring; the Applicant shall arrange a Precon Meeting that shall include the PI, Native American consultant/monitor (where Native American resources may be impacted), Construction Manager (CM) and/or Grading Contractor, Resident Engineer (RE), Building Inspector (BI), if appropriate, and MMC. The qualified Archaeologist and Native American Monitor shall attend any grading/excavation related Precon Meetings to make comments and/or suggestions concerning the Archaeological Monitoring program with the Construction Manager and/or Grading Contractor.
    a. If the PI is unable to attend the Precon Meeting, the Applicant shall schedule a focused Precon Meeting with MMC, the PI, RE, CM or BI, if appropriate, prior

to the start of any work that requires monitoring.

2. Identify Areas to be Monitored
   a. Prior to the start of any work that requires monitoring, the PI shall submit an Archaeological Monitoring Exhibit (AME) (with verification that the AME has been reviewed and approved by the Native American consultant/monitor when Native American resources may be impacted) based on the appropriate construction documents (reduced to 11x17) to MMC identifying the areas to be monitored including the delineation of grading/excavation limits.
   b. The AME shall be based on the results of a site specific records search as well as information regarding existing known soil conditions (native or formation).
3. When Monitoring Will Occur
   a. Prior to the start of any work, the PI shall also submit a construction schedule to MMC through the RE indicating when and where monitoring will occur.
   b. The PI may submit a detailed letter to MMC prior to the start of work or during construction requesting a modification to the monitoring program. This request shall be based on relevant information such as review of final construction documents which indicate site conditions such as depth of excavation and/or site graded to bedrock, etc., which may reduce or increase the potential for resources to be present.

III. During Construction

A. Monitor(s) Shall be Present During Grading/Excavation/Trenching
   1. The Archaeological Monitor shall be present full-time during all soil disturbing and grading/excavation/trenching activities which could result in impacts to archaeological resources as identified on the AME. **The Construction Manager is responsible for notifying the RE, PI, and MMC of changes to any construction activities such as in the case of a potential safety concern within the area being monitored. In certain circumstances OSHA safety requirements may necessitate modification of the AME.**
   2. The Native American consultant/monitor shall determine the extent of their presence during soil disturbing and grading/excavation/trenching activities based on the AME and provide that information to the PI and MMC. If prehistoric resources are encountered during the Native American consultant/monitor's absence, work shall stop and the Discovery Notification Process detailed in Section III.B-C and IV.A-D shall commence.
   3. The PI may submit a detailed letter to MMC during construction requesting a modification to the monitoring program when a field condition such as modern disturbance post-dating the previous grading/trenching activities, presence of fossil formations, or when native soils are encountered that may reduce or increase the potential for resources to be present.
   4. The archaeological and Native American consultant/monitor shall document field activity via the Consultant Site Visit Record (CSVR). The CSVR's shall be faxed by the CM to the RE the first day of monitoring, the last day of monitoring, monthly (**Notification of Monitoring Completion)**, and in the case of ANY discoveries. The RE shall forward copies to MMC.

B. Discovery Notification Process
   1. In the event of a discovery, the Archaeological Monitor shall direct the contractor to temporarily divert all soil disturbing activities, including but not limited to digging,

trenching, excavating or grading activities in the area of discovery and in the area reasonably suspected to overlay adjacent resources and immediately notify the RE or BI, as appropriate.

2. The Monitor shall immediately notify the PI (unless Monitor is the PI) of the discovery.
3. The PI shall immediately notify MMC by phone of the discovery, and shall also submit written documentation to MMC within 24 hours by fax or email with photos of the resource in context, if possible.
4. No soil shall be exported off-site until a determination can be made regarding the significance of the resource specifically if Native American resources are encountered.

C. Determination of Significance

1. The PI and Native American consultant/monitor, where Native American resources are discovered shall evaluate the significance of the resource. If Human Remains are involved, follow protocol in Section IV below.
   a. The PI shall immediately notify MMC by phone to discuss significance determination and shall also submit a letter to MMC indicating whether additional mitigation is required.
   b. If the resource is significant, the PI shall submit an Archaeological Data Recovery Program (ADRP) which has been reviewed by the Native American consultant/monitor, and obtain written approval from MMC. Impacts to significant resources must be mitigated before ground disturbing activities in the area of discovery will be allowed to resume. **Note: If a unique archaeological site is also an historical resource as defined in CEQA, then the limits on the amount(s) that a project applicant may be required to pay to cover mitigation costs as indicated in CEQA Section 21083.2 shall not apply.**
   c. If the resource is not significant, the PI shall submit a letter to MMC indicating that artifacts will be collected, curated, and documented in the Final Monitoring Report. The letter shall also indicate that that no further work is required.

IV. Discovery of Human Remains

If human remains are discovered, work shall halt in that area and no soil shall be exported off-site until a determination can be made regarding the provenance of the human remains; and the following procedures as set forth in CEQA Section 15064.5(e), the California Public Resources Code (Sec. 5097.98) and State Health and Safety Code (Sec. 7050.5) shall be undertaken:

A. Notification

1. Archaeological Monitor shall notify the RE or BI as appropriate, MMC, and the PI, if the Monitor is not qualified as a PI. MMC will notify the appropriate Senior Planner in the Environmental Analysis Section (EAS) of the Development Services Department to assist with the discovery notification process.
2. The PI shall notify the Medical Examiner after consultation with the RE, either in person or via telephone.

B. Isolate discovery site

1. Work shall be directed away from the location of the discovery and any nearby area reasonably suspected to overlay adjacent human remains until a determination can be made by the Medical Examiner in consultation with the PI concerning the provenance of the remains.

2. The Medical Examiner, in consultation with the PI, will determine the need for a field examination to determine the provenance.
3. If a field examination is not warranted, the Medical Examiner will determine with input from the PI, if the remains are or are most likely to be of Native American origin.

C. If Human Remains **ARE** determined to be Native American
1. The Medical Examiner will notify the Native American Heritage Commission (NAHC) within 24 hours. By law, **ONLY** the Medical Examiner can make this call.
2. NAHC will immediately identify the person or persons determined to be the Most Likely Descendent (MLD) and provide contact information.
3. The MLD will contact the PI within 24 hours or sooner after the Medical Examiner has completed coordination, to begin the consultation process in accordance with CEQA Section 15064.5(e), the California Public Resources and Health & Safety Codes.
4. The MLD will have 48 hours to make recommendations to the property owner or representative, for the treatment or disposition with proper dignity, of the human remains and associated grave goods.
5. Disposition of Native American Human Remains will be determined between the MLD and the PI, and, if:
   a. The NAHC is unable to identify the MLD, OR the MLD failed to make a recommendation within 48 hours after being notified by the Commission; OR;
   b. The landowner or authorized representative rejects the recommendation of the MLD and mediation in accordance with PRC 5097.94 (k) by the NAHC fails to provide measures acceptable to the landowner, THEN,
   c. In order to protect these sites, the Landowner shall do one or more of the following:
      (1) Record the site with the NAHC;
      (2) Record an open space or conservation easement on the site;
      (3) Record a document with the County.
   d. Upon the discovery of multiple Native American human remains during a ground disturbing land development activity, the landowner may agree that additional conferral with descendants is necessary to consider culturally appropriate treatment of multiple Native American human remains. Culturally appropriate treatment of such a discovery may be ascertained from review of the site utilizing cultural and archaeological standards. Where the parties are unable to agree on the appropriate treatment measures the human remains and items associated and buried with Native American human remains shall be reinterred with appropriate dignity, pursuant to Section 5.c., above.

D. If Human Remains are **NOT** Native American
1. The PI shall contact the Medical Examiner and notify them of the historic era context of the burial.
2. The Medical Examiner will determine the appropriate course of action with the PI and City staff (PRC 5097.98).
3. If the remains are of historic origin, they shall be appropriately removed and conveyed to the San Diego Museum of Man for analysis. The decision for internment of the human remains shall be made in consultation with MMC, EAS, the applicant/landowner, any known descendant group, and the San Diego Museum of Man.

.

V. Night and/or Weekend Work

A. If night and/or weekend work is included in the contract
   1. When night and/or weekend work is included in the contract package, the extent and timing shall be presented and discussed at the precon meeting.
   2. The following procedures shall be followed.
      a. No Discoveries
         In the event that no discoveries were encountered during night and/or weekend work, the PI shall record the information on the CSVR and submit to MMC via fax by 8AM of the next business day.
      b. Discoveries
         All discoveries shall be processed and documented using the existing procedures detailed in Sections III - During Construction, and IV – Discovery of Human Remains. Discovery of human remains shall always be treated as a significant discovery.
      c. Potentially Significant Discoveries
         If the PI determines that a potentially significant discovery has been made, the procedures detailed under Section III - During Construction and IV-Discovery of Human Remains shall be followed.
      d. The PI shall immediately contact MMC, or by 8AM of the next business day to report and discuss the findings as indicated in Section III-B, unless other specific arrangements have been made.

B. If night and/or weekend work becomes necessary during the course of construction
   1. The Construction Manager shall notify the RE, or BI, as appropriate, a minimum of 24 hours before the work is to begin.
   2. The RE, or BI, as appropriate, shall notify MMC immediately.

C. All other procedures described above shall apply, as appropriate.

VI. Post Construction

A. Preparation and Submittal of Draft Monitoring Report
   1. The PI shall submit two copies of the Draft Monitoring Report (even if negative), prepared in accordance with the Historical Resources Guidelines (Appendix C/D) which describes the results, analysis, and conclusions of all phases of the Archaeological Monitoring Program (with appropriate graphics) to MMC for review and approval within 90 days following the completion of monitoring. **It should be noted that if the PI is unable to submit the Draft Monitoring Report within the allotted 90-day timeframe resulting from delays with analysis, special study results or other complex issues, a schedule shall be submitted to MMC establishing agreed due dates and the provision for submittal of monthly status reports until this measure can be met.**
      a. For significant archaeological resources encountered during monitoring, the Archaeological Data Recovery Program shall be included in the Draft Monitoring Report.
      b. Recording Sites with State of California Department of Parks and Recreation
         The PI shall be responsible for recording (on the appropriate State of California Department of Park and Recreation forms-DPR 523 A/B) any significant or potentially significant resources encountered during the Archaeological Monitoring Program in accordance with the City's Historical Resources

Guidelines, and submittal of such forms to the South Coastal Information Center with the Final Monitoring Report.

2. MMC shall return the Draft Monitoring Report to the PI for revision or, for preparation of the Final Report.
3. The PI shall submit revised Draft Monitoring Report to MMC for approval.
4. MMC shall provide written verification to the PI of the approved report.
5. MMC shall notify the RE or BI, as appropriate, of receipt of all Draft Monitoring Report submittals and approvals.

B. Handling of Artifacts
1. The PI shall be responsible for ensuring that all cultural remains collected are cleaned and catalogued
2. The PI shall be responsible for ensuring that all artifacts are analyzed to identify function and chronology as they relate to the history of the area; that faunal material is identified as to species; and that specialty studies are completed, as appropriate.
3. The cost for curation is the responsibility of the property owner.

C. Curation of artifacts: Accession Agreement and Acceptance Verification
1. The PI shall be responsible for ensuring that all artifacts associated with the survey, testing and/or data recovery for this project are permanently curated with an appropriate institution. This shall be completed in consultation with MMC and the Native American representative, as applicable.
2. The PI shall include the Acceptance Verification from the curation institution in the Final Monitoring Report submitted to the RE or BI and MMC.
3. When applicable to the situation, the PI shall include written verification from the Native American consultant/monitor indicating that Native American resources were treated in accordance with state law and/or applicable agreements. If the resources were reinterred, verification shall be provided to show what protective measures were taken to ensure no further disturbance occurs in accordance with Section IV – Discovery of Human Remains, Subsection 5.

D. Final Monitoring Report(s)
1. The PI shall submit one copy of the approved Final Monitoring Report to the RE or BI as appropriate, and one copy to MMC (even if negative), within 90 days after notification from MMC that the draft report has been approved.
2. The RE shall, in no case, issue the Notice of Completion and/or release of the Performance Bond for grading until receiving a copy of the approved Final Monitoring Report from MMC which includes the Acceptance Verification from the curation institution.

HELIX
Environmental Planning

University of San Diego Master Plan Update and Conditional Use Permit Amendment

Air Quality Technical Report

December 2016

Prepared for:
MW Steele Group
1805 Newton Avenue, Suite A
San Diego, CA 92113

Prepared by:
HELIX Environmental Planning, Inc.
7578 El Cajon Boulevard
La Mesa, CA 91942

AIR QUALITY TECHNICAL REPORT

for the

UNIVERSITY OF SAN DIEGO MASTER PLAN UPDATE AND CONDITIONAL USE PERMIT AMENDMENT

Prepared for:

MW Steele Group
1805 Newton Avenue, Suite A
San Diego, CA 92113

Prepared by:

HELIX Environmental Planning, Inc.
7578 El Cajon Boulevard
La Mesa, CA 91942

December 2016

TABLE OF CONTENTS

Section **Page**

EXECUTIVE SUMMARY ES-1

1.0 INTRODUCTION 1

1.1 Purpose of The Report 1
1.2 Project Location 1
1.3 Project Description 1
1.4 Construction Emissions Control Best Management Practices 2
1.5 Regulatory Requirements That Reduce Emissions 3

2.0 REGULATORY SETTING AND EXISTING CONDITIONS 4

2.1 Regulatory Framework 4
2.1.1 Criteria Pollutants 4
2.1.2 Toxic Air Contaminants 7
2.2 Climate and Meteorology 8
2.3 Existing Air Quality 8
2.3.1 Attainment Designations 8
2.3.2 Monitored Air Quality 9

3.0 METHODOLOGY AND THRESHOLDS OF SIGNIFICANCE 10

3.1 Methodology 10
3.1.1 Construction Emissions 10
3.1.2 Operation Emissions 11
3.2 Significance Criteria 11

4.0 AIR QUALITY IMPACT ANALYSIS 14

4.1 Consistency With Air Quality Plans 14
4.2 Conformance to Federal and State Air Quality Standards 15
4.2.1 Construction 15
4.2.2 Operation 16
4.3 Cumulatively Considerable Net Increase of Nonattainment Criteria Pollutants 16
4.4 Impacts To Sensitive Receptors 17
4.4.1 Carbon Monoxide Hotspots 17
4.4.2 Exposure to Toxic Air Contaminants 18
4.5 Odors 19
4.6 New Stationary Sources 20

5.0 REFERENCES 21

TABLE OF CONTENTS (cont.)

LIST OF APPENDICES
(CD on back cover)

A CalEEMod Output Data
B CO Hotspot Modeling

LIST OF FIGURES

No.	Title	Follows Page
1	Regional Location Map	2
2	Aerial Photograph	2

LIST OF TABLES

No.	Title	Page
1	Ambient Air Quality Standards	6
2	Federal and State Air Quality Designation for the San Diego Air Basin	7
3	Air Quality Monitoring Data	9
4	Screening-Level Thresholds for Air Quality Impact Analysis	13
5	Maximum Daily Construction Emissions.	15
6	Operation Daily Maximum Emissions – Proposed Project	16
7	CO Hotspots Modeling Results	18

LIST OF ACRONYMS

$\mu g/m^3$	micrograms per cubic meter
AB	Assembly Bill
ADT	average daily trip
AIA	Airport Influence Area
AMSL	above mean sea level
APCD	Air Pollutaion Control District
AQIA	Air Quality Impact Assessments
BMP	best management practice
CAA	Clean Air Act (Federal)
CAAQS	California Ambient Air Quality Standards
CalEEMod	California Emission Estimator Model
CARB	California Air Resources Board
CCAA	California Clean Air Act
CEQA	California Environmental Quality Act
City	City of San Diego
CO	carbon monoxide
CUP	Conditional Use Permit
DPM	diesel particulate matter
EIR	Environmental Impact Report
ESL	Environmentally Sensitive Land
FTE	full-time equivalent
HAP	hazardous air pollutant
HRA	health risk assessment
HVAC	heating, ventilation, and air conditioning
H_2S	hydrogen sulfide
I-	Interstate
IEM	Iowa Environmental Mesonet
LLG	Linscott, Law and Greenspan Engineers
LOS	Level of Service
MPU	Master Plan Update
MEI	maximally exposed individual
MHPA	Multi-habitat Planning Area
mph	miles per hour
MSCP	Multiple Species Conservation Program

LIST OF ACRONYMS (cont.)

NAAQS	National Ambient Air Quality Standards
NO	nitrogen oxide
N_2O	nitrous oxide
NO_2	nitrogen dioxide
NO_X	nitrogen oxides
O_3	ozone
Pb	lead
PM	particulate matter
PM_{10}	particulate matter less than 10 microns
$PM_{2.5}$	particulate matter less than 2.5 microns
ppm	parts per million
RAQS	Regional Air Quality Strategies
ROG	reactive organic gas
RPO	Resource Protection Ordinance
SANDAG	San Diego Association of Governments
SCAQMD	South Coast Air Quality Management District
SDAB	San Diego Air Basin
SDAPCD	San Diego Air Pollution Control District
SDP	Site Development Permit
SIP	State Implementation Plan
SO_2	sulfur dioxide
SO_X	sulfur oxides
TAC	toxic air contaminant
T-BACT	Toxics-Best Available Control Technology
TIA	Traffic Impact Analysis
URF	unit risk factor
USEPA	United States Environmental Protection Agency
USD	University of San Diego
USGS	U.S. Geological Survey
VOC	volatile organic compound
WRCC	Western Regional Climate Center

EXECUTIVE SUMMARY

This report presents an assessment of potential air quality emission impacts associated with the University of San Diego (USD or University) Master Plan Update (MPU or Project) and associated Conditional Use Permit (CUP) amendment. The evaluation addresses the potential for criteria air pollutant emission impacts during the construction and operation of the MPU. An assessment was made to estimate the criteria pollutant emissions that would be emitted as a result of full development of the MPU.

The Project would result in emissions of criteria air pollutants during construction and operation. Construction emissions include fugitive dust, heavy construction equipment exhaust, and vehicle trips associated with workers commuting to and from the site and trucks hauling materials. In accordance with San Diego Air Pollution Control District (SDAPCD) Rule 55, fugitive dust control measures including the use of an on-site water truck to water down active grading areas and unpaved and paved roads at least twice daily are incorporated into the Project design. Operational sources of emissions include area, on-site energy use, and transportation. Project emissions of criteria pollutants during construction and operations would remain below SDAPCD emissions thresholds.

The 1996 Master Plan Final Environmental Impact Report (FEIR) concluded that the USD Master Plan construction period emissions would result in a significant and unmitigable cumulative impact because of the non-attainment status of the San Diego Air Basin (SDAB) and inability of one project to control emissions in the region. Because the Master Plan as analyzed in 1996 has not been fully built out and 16 projects remain unbuilt, any added projects would only exacerbate the cumulative effect. As such, the MPU would incrementally add to those construction period emissions and contribute to the cumulatively significant and unavoidable impacts disclosed in the previous EIR.

The Project would be consistent with air quality policies set forth by the SDAPCD as presented in the most recent Regional Air Quality Strategies (RAQS). The Project would also result in less than significant impacts to odors.

With regard to long-term operations, it is not currently known if any of the academic or support uses proposed by the MPU would include any new sources of TACs (such as laboratory buildings). Mitigation Measure AQ-1 requires that subsequent projects containing such uses analyze specific operation-related TAC impacts to ensure that emissions will remain below SDAPCD thresholds. By ensuring all future individual projects which include new sources of TACs achieve emissions below SDAPCD thresholds, implementation of the MPU would result in less than significant impacts related to TAC emissions.

THIS PAGE INTENTIONALLY LEFT BLANK

1.0 INTRODUCTION

1.1 PURPOSE OF THE REPORT

This report analyzes potential air quality impacts associated with the University of San Diego (USD or University) Master Plan Update (MPU or Project), which includes an evaluation of existing conditions in the Project vicinity, an assessment of potential impacts associated with Project construction, and an evaluation of Project operational impacts.

1.2 PROJECT LOCATION

The USD campus occupies approximately 180 acres of land devoted to university-related uses in the central portion of the City of San Diego (City), in the community of Linda Vista. The campus is located 4 miles north of downtown San Diego, approximately 0.5 mile east of Interstate (I-) 5 and 0.5 mile north of I-8 (See Figure 1, *Regional Location Map*). The USD campus is located within an unsectioned area of Township 16 South, Range 3 West, on the U.S. Geological Survey (USGS) 7.5-minute La Jolla quadrangle map. Tecolote Canyon Natural Park forms the northern border of the property; Morena Boulevard is located to the west, with Via Las Cumbres bordering the campus on the east, and Linda Vista Road to the south. Elevations on campus range from approximately 50 feet above mean sea level (AMSL) to approximately 260 feet AMSL. With the exception of the steep, north-facing slopes along the northern campus border and the slopes on the western end of campus near Marian Way, the majority of the campus is developed and supports university facilities (buildings, parking lots, athletic fields, etc.) and associated landscaping.

Surrounding land uses include commercial/industrial development and residential housing in the Morena Boulevard area to the west of the campus, student and non-student multi-family housing immediately to the south and various types of residential development to the east. Tecolote Canyon Natural Park contains undeveloped regional open space to the north. The City's Multi-habitat Planning Area (MHPA) occurs on approximately 7.6 acres along the northern edge of the campus and extends offsite into Tecolote Canyon. The campus is located within the Airport Influence Area (AIA) for San Diego International Airport and Montgomery Field.

1.3 PROJECT DESCRIPTION

In 1996, USD received approval of its existing Master Plan to guide the phased buildout of the campus through the year 2030. The City issued Conditional Use Permit (CUP)/Resource Protection Ordinance (RPO) Permit No. 92-0568 to allow the campus to construct 23 conceptual projects and expand student population to 7,000 full-time equivalent (FTE). Two future study areas were also identified in the Master Plan. The sequence of the projects was not determined at that time in order to provide flexibility with regard to economics and academic needs. The 1996 Master Plan EIR was prepared to assess the short- and long-term, as well as cumulative, impacts of implementing the Master Plan and was certified in conjunction with the CUP approvals. Since 1996, the Master Plan and CUP for the University have been amended a number of times and USD has received approval of projects through substantial conformance to CUP/RPO Permit No. 92-0568.

The Master Plan is a document that records the vision and goals of the physical campus. This vision for the campus is updated from time to time to reflect the changes in demographics and the economy that affect higher education. Most importantly, the Master Plan is required by the City as the basis for the University's CUP and to ensure the University's fulfillment of current regulations. Over the last several years, USD campus officials have been conducting vision planning and space planning exercises to address the future needs of the University. An update to the existing Master Plan is now proposed.

The proposed USD MPU provides a comprehensive revision of the 1996 Master Plan and Design Guidelines, as well as the campus' building space and infrastructure needs associated with increasing enrollment from 7,000 full-time equivalent (FTE) students to 10,000 FTE over the next 20+ years. The USD MPU would allow for the development of academic core/student service/support uses and athletics and recreation uses, and additional student housing. Parking supply expansions would also occur under the proposed MPU.

Among the projects outlined in the MPU are 14 proposed construction sites. The 14 proposed project sites would allow for the construction of academic/administrative buildings, student housing, student services uses, athletics/athletic support/administrative buildings, parking, pedestrian circulation and landscape improvements not contemplated in the 1996 Master Plan and related EIR (Figure 2, *Aerial Photograph*). Design guidelines contained in the MPU would provide a comprehensive design framework to guide campus development. Other elements of the MPU address the planning context of the campus, provide an enrollment and space analysis, and identify sustainability goals.

The above-described improvements would require the following entitlements: an amended CUP to allow for the continued institutional use and a Site Development Permit (SDP) to allow impacts to Environmentally Sensitive Lands (ESLs).

1.4 CONSTRUCTION EMISSIONS CONTROL BEST MANAGEMENT PRACTICES

The Project would incorporate best management practices (BMPs) during construction to reduce emissions of fugitive dust. San Diego Air Pollution Control District (SDAPCD) Rule 55 – Fugitive Dust Control states that no dust and/or dirt shall leave the property line. SDAPCD Rule 55 requires the following:

(1) **Airborne Dust Beyond the Property Line:** No person shall engage in construction or demolition activity subject to this rule in a manner that discharges visible dust emissions into the atmosphere beyond the property line for a period or periods aggregating more than 3 minutes in any 60-minute period.

(2) **Track-Out/Carry-Out:** Visible roadway dust as a result of active operations, spillage from transport trucks, erosion, or track-out/carry-out shall:

(i) be minimized by the use of any of the following or equally effective trackout/ carry-out and erosion control measures that apply to the Project or operation:

(a) track-out grates or gravel beds at each egress point,

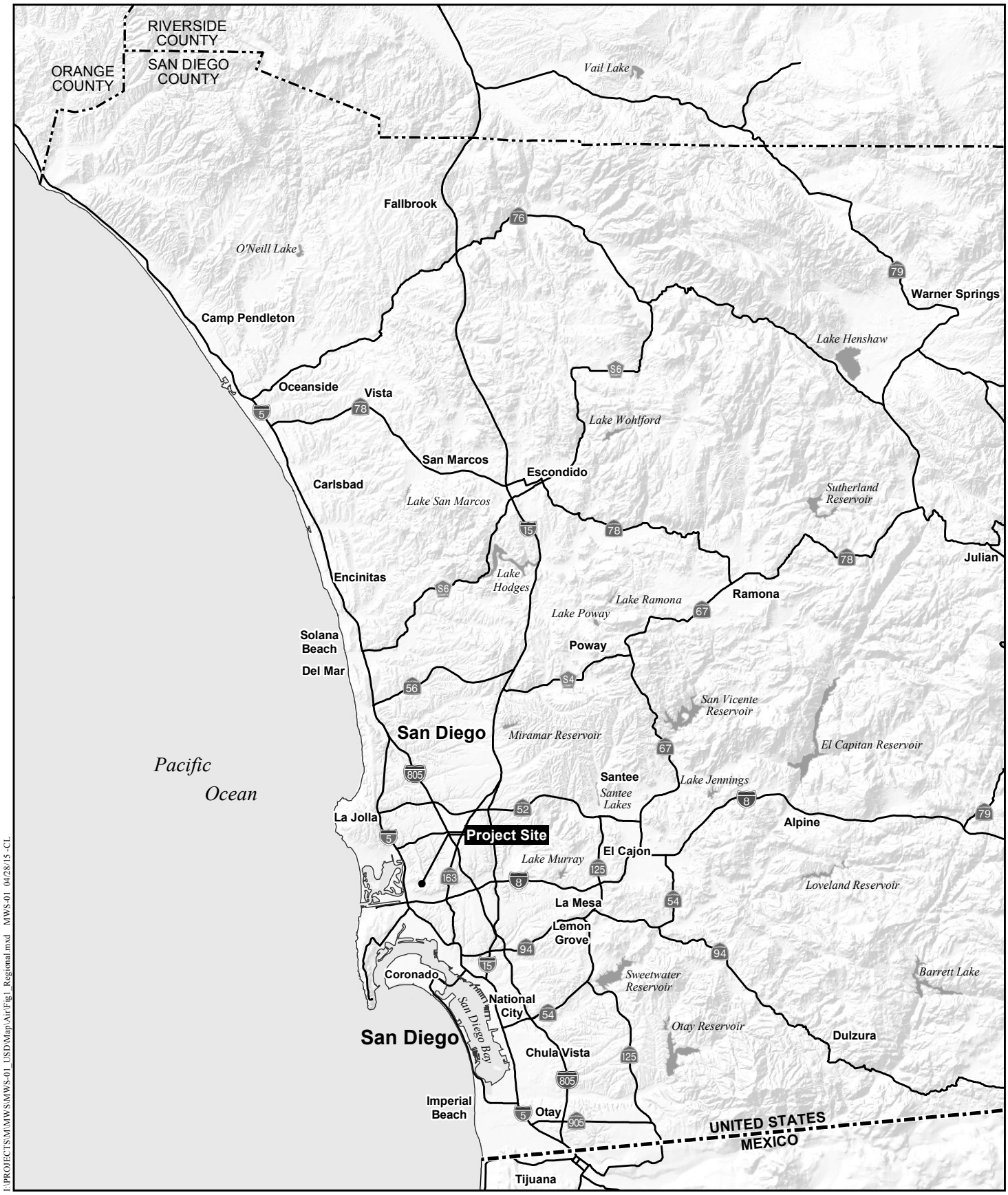

L:\PROJECTS\M\MWS\MWS-01_USD\Map\AirFig1_Regional.mxd MWS-01 04/28/15 -CL

Regional Location Map

UNIVERSITY OF SAN DIEGO MASTER PLAN UPDATE

HELIX Environmental Planning

N 0 8 Miles

Figure 1

I:\PROJECTS\M\MWS\MWS-01 USD\Map\Air\Fig2_Aerial.mxd MWS-01 10/22/15 - CL

Aerial Photograph

UNIVERSITY OF SAN DIEGO MASTER PLAN UPDATE

HELIX Environmental Planning

0 500 Feet

Figure 2

(b) wheel-washing at each egress during muddy conditions, soil binders, chemical soil stabilizers, geotextiles, mulching, or seeding; and for outbound transport trucks;

(c) using secured tarps or cargo covering, watering, or treating of transported material; and

(ii) be removed at the conclusion of each work day when active operations cease, or every 24 hours for continuous operations. If a street sweeper is used to remove any track-out/carry-out, only PM_{10}-efficient (particulate matter less than 10 microns) street sweepers certified to meet the most current South Coast Air Quality Management District (SCAQMD) Rule 1186 requirements shall be used. The use of blowers for removal of track-out/carry-out is prohibited under any circumstances.

The control measures listed below are the BMPs that the Project would incorporate for dust control:

- A minimum of two applications of water during grading between dozer/scraper passes.
- Paving, chip sealing, or chemical stabilization of internal roadways after completion of grading.
- Termination of grading if winds exceed 25 miles per hour (mph).
- Ensure that all exposed surfaces maintain a minimum soil moisture of 12 percent.
- Stabilization of dirt storage piles by chemical binders, tarps, fencing, or other erosion control.

1.5 REGULATORY REQUIREMENTS THAT REDUCE EMISSIONS

New development under the Project would be designed to meet current 2013 Title 24 energy efficiency standards. In accordance with the requirements of Title 24, new development under the MPU would:

- Install ceiling, attic, and wall insulation,
- Install window glazing,
- Have the installation of all heating, ventilation, and air conditioning (HVAC) units verified by a third party, and
- Include roof anchors and pre-wiring to allow for the installation of photovoltaic systems.

2.0 REGULATORY SETTING AND EXISTING CONDITIONS

2.1 REGULATORY FRAMEWORK

2.1.1 Criteria Pollutants

Criteria pollutants are defined by state and federal law as a risk to the health and welfare of the general public. In general, air pollutants include the following compounds:

- Ozone (O_3)
- Reactive Organic Gases (ROGs) or Volatile Organic Compounds (VOCs)
- Carbon Monoxide (CO)
- Nitrogen Dioxide (NO_2)
- Respirable Particulate Matter (PM_{10}) and Fine Particulate Matter ($PM_{2.5}$)
- Sulfur dioxide (SO_2)
- Lead (Pb)

The following specific descriptions of health effects for each of the air pollutants potentially associated with Project construction and operations are based on information provided by the U.S. Environmental Protection Agency (USEPA 2007) and the California Air Resources Board ([CARB] 2009).

Ozone. Ozone is considered a photochemical oxidant, which is a chemical that is formed when VOCs and nitrogen oxides (NO_X), both by-products of fuel combustion, react in the presence of ultraviolet light. Ozone is considered a respiratory irritant and prolonged exposure can reduce lung function, aggravate asthma, and increase susceptibility to respiratory infections. Children and those with existing respiratory diseases are at greatest risk from exposure to ozone.

Reactive Organic Gases. ROGs (also known as VOCs) are compounds composed primarily of hydrogen and carbon atoms. Internal combustion associated with motor vehicle usage is the major source of ROGs. Other sources of ROGs include evaporative emissions from paints and solvents, the application of asphalt paving, and the use of household consumer products such as aerosols. Adverse effects on human health are not caused directly by ROGs, but rather by reactions of ROGs to form secondary pollutants such as ozone.

Carbon Monoxide. CO is a product of fuel combustion. CO is an odorless, colorless gas. It affects red blood cells in the body by binding to hemoglobin and reducing the amount of oxygen that can be carried to the body's organs and tissues. CO can cause health effects to those with cardiovascular disease and can also affect mental alertness and vision.

Nitrogen Dioxide. NO_2 is also a by-product of fuel combustion and is formed both directly as a product of combustion and in the atmosphere through the reaction of nitrogen oxide (NO) with oxygen. NO_2 is a respiratory irritant and may affect those with existing respiratory illness, including asthma. NO_2 can also increase the risk of respiratory illness.

Respirable Particulate Matter and Fine Particulate Matter. Respirable particulate matter, or PM_{10}, refers to particulate matter with an aerodynamic diameter of 10 microns or less. Fine particulate matter, or $PM_{2.5}$, refers to particulate matter with an aerodynamic diameter of 2.5 microns or less. Particulate matter in these size ranges have been determined to have the potential to lodge in the lungs and contribute to respiratory problems. PM_{10} and $PM_{2.5}$ arise from a variety of sources, including road dust, diesel exhaust, fuel combustion, tire and brake wear, construction operations, and windblown dust. PM_{10} and $PM_{2.5}$ can increase susceptibility to respiratory infections and can aggravate existing respiratory diseases such as asthma and chronic bronchitis. $PM_{2.5}$ is considered to have the potential to lodge deeper in the lungs. Diesel particulate matter (DPM) is classified a carcinogen by CARB.

Sulfur dioxide. SO_2 is a colorless, reactive gas that is produced from the burning of sulfur-containing fuels such as coal and oil and by other industrial processes. Generally, the highest concentrations of SO_2 are found near large industrial sources. SO_2 is a respiratory irritant that can cause narrowing of the airways leading to wheezing and shortness of breath. Long-term exposure to SO_2 can cause respiratory illness and aggravate existing cardiovascular disease.

Lead. Lead in the atmosphere occurs as particulate matter. With the phase-out of leaded gasoline, large manufacturing facilities are the sources of the largest amounts of lead emissions. Lead has the potential to cause gastrointestinal, central nervous system, kidney and blood diseases upon prolonged exposure. Lead is also classified as a probable human carcinogen. Because emissions of lead are found only in projects that are permitted by SDAPCD, lead is not an air quality of concern for the proposed Project.

Air quality is defined by ambient air concentrations of specific pollutants identified by the USEPA to be of concern with respect to health and welfare of the general public. The USEPA is responsible for enforcing the Federal Clean Air Act (CAA) of 1970 and its 1977 and 1990 Amendments. The CAA required the USEPA to establish National Ambient Air Quality Standards (NAAQS), which identify concentrations of pollutants in the ambient air below which no adverse effects on the public health and welfare are anticipated. In response, the USEPA established both primary and secondary standards for several criteria pollutants, which are introduced above. Table 1, *Ambient Air Quality Standards*, shows the federal and state ambient air quality standards for these pollutants.

The CAA allows states to adopt ambient air quality standards and other regulations provided they are at least as stringent as federal standards. CARB has established the more stringent California Ambient Air Quality Standards (CAAQS) for the six criteria pollutants through the California Clean Air Act of 1988 (CCAA), and also has established CAAQS for additional pollutants, including sulfates, hydrogen sulfide (H_2S), vinyl chloride, and visibility-reducing particles. Areas that do not meet the NAAQS or the CAAQS for a particular pollutant are considered to be “nonattainment areas” for that pollutant. On April 30, 2012, the San Diego Air Basin (SDAB) was classified as a marginal nonattainment area for the 8-hour NAAQS for ozone. The SDAB is an attainment area under the NAAQS for all other criteria pollutants. The SDAB currently falls under a national “maintenance plan” for CO, following a 1998 re-designation as a CO attainment area (SDAPCD 2010). The SDAB is currently classified as a nonattainment area under the CAAQS for ozone (serious nonattainment), PM_{10}, and $PM_{2.5}$.

Table 1 AMBIENT AIR QUALITY STANDARDS				
Pollutant	**Averaging Time**	**California Standards**	**Federal Standards**	
			Primary[a]	**Secondary[b]**
O_3	1 Hour	0.09 ppm (180 µg/m^3)	–	–
	8 Hour	0.070 ppm (137 µg/m^3)	0.070 ppm (137 µg/m^3)	Same as Primary
PM10	24 Hour	50 µg/m^3	150 µg/m^3	Same as Primary
	AAM	20 µg/m^3	–	Same as Primary
PM2.5	24 Hour	–	35 µg/m^3	Same as Primary
	AAM	12 µg/m^3	12.0 µg/m^3	Same as Primary
CO	1 Hour	20 ppm (23 mg/m^3)	35 ppm (40 mg/m^3)	–
	8 Hour	9.0 ppm (10 mg/m^3)	9 ppm (10 mg/m^3)	–
	8 Hour (Lake Tahoe)	6 ppm (7 mg/m^3)	–	–
NO_2	AAM	0.030 ppm (57 µg/m^3)	0.053 ppm (100 µg/m^3)	Same as Primary
	1 Hour	0.18 ppm (339 µg/m^3)	0.100 ppm (188 µg/m^3)	–
SO_2	24 Hour	0.04 ppm (105 µg/m^3)	–	–
	3 Hour	–	–	0.5 ppm (1,300 µg/m^3)
	1 Hour	0.25 ppm (655 µg/m^3)	0.075 ppm (196 µg/m^3)	–
Lead	30-day Avg.	1.5 µg/m^3	–	–
	Calendar Quarter	–	1.5 µg/m^3	Same as Primary
	Rolling 3-month Avg.	–	0.15 µg/m^3	
Visibility Reducing Particles	8 hour	Extinction coefficient of 0.23 per km – visibility ≥ 10 miles (0.07 per km – ≥30 miles for Lake Tahoe)	**No Federal Standards**	
Sulfates	24 Hour	25 µg/m^3		
Hydrogen Sulfide	1 Hour	0.03 ppm (42 µg/m^3)		
Vinyl Chloride	24 Hour	0.01 ppm (26 µg/m^3)		

Source: CARB 2015c.
O_3: ozone; ppm: parts per million; µg/m^3: micrograms per cubic meter; PM_{10}: large particulate matter;
AAM: Annual Arithmetic Mean; $PM_{2.5}$: fine particulate matter; CO: carbon monoxide; mg/m^3: milligrams per cubic meter;
NO_2: nitrogen dioxide; SO_2: sulfur dioxide; km: kilometer; –: No Standard.

[a] National Primary Standards: The levels of air quality necessary, within an adequate margin of safety, to protect the public health.

[b] National Secondary Standards: The levels of air quality necessary to protect the public welfare from any known or anticipated adverse effects of a pollutant.

Note: More detailed information in the data presented in this table can be found at the CARB website (www.arb.ca.gov).

The SDAPCD is the local agency responsible for the administration and enforcement of air quality regulations for the County. The SDAPCD and San Diego Association of Governments (SANDAG) are responsible for developing and implementing the clean air plan for attainment and maintenance of the ambient air quality standards in the SDAB. The County's Regional Air Quality Strategies (RAQS) was initially adopted in 1991, and is updated on a triennial basis. The most recent version of the RAQS was adopted by the SDAPCD in 2009. The local RAQS, in combination with those from all other California nonattainment areas with serious (or worse) air quality problems, is submitted to CARB, which develops the California State Implementation Plan (SIP). The SIP relies on the same information from SANDAG to develop emission

inventories and emission reduction strategies that are included in the attainment demonstration for the air basin. The current federal and state attainment status for San Diego County is presented in Table 2, *Federal and State Air Quality Designation for the San Diego Air Basin*.

Table 2
FEDERAL AND STATE AIR QUALITY DESIGNATION FOR THE SAN DIEGO AIR BASIN

Criteria Pollutant	Federal Designation	State Designation
O_3 (1-hour)	(No federal standard)	Nonattainment
O_3 (8-hour)	Marginal Nonattainment	Nonattainment
CO	Maintenance	Attainment
PM_{10}	Unclassifiable	Nonattainment
$PM_{2.5}$	Attainment	Nonattainment
NO_2	Attainment	Attainment
SO_2	Attainment	Attainment
Lead	Attainment	Attainment
Sulfates	(No federal standard)	Attainment
Hydrogen Sulfide	(No federal standard)	Unclassifiable
Visibility	(No federal standard)	Unclassifiable

Source: CARB 2015a

2.1.2 Toxic Air Contaminants

Toxic air contaminants (TACs) are a category of air pollutants that have been shown to have an impact on human health but are not classified as criteria pollutants. Examples include certain aromatic and chlorinated hydrocarbons, certain metals, and asbestos. Air toxics are generated by a number of sources, including stationary ones such as dry cleaners, gas stations, combustion sources, and laboratories; mobile ones such as automobiles; and area sources such as farms, landfills, construction sites, and residential areas. Adverse health effects of TACs can be carcinogenic (cancer-causing), short-term (acute) noncarcinogenic, and long-term (chronic) noncarcinogenic. Public exposure to TACs is a significant environmental health issue in California.

California's air toxics control program began in 1983 with the passage of the Toxic Air Contaminant Identification and Control Act, better known as Assembly Bill (AB) 1807 or the Tanner Bill. When a compound becomes listed as a TAC under the Tanner process, the CARB normally establishes minimum statewide emission control measures to be adopted by local air pollution control districts (APCDs). Later legislative amendments (AB 2728) required the CARB to incorporate all 189 federal hazardous air pollutants (HAPs) into the state list of TACs.

Supplementing the Tanner process, AB 2588 – the Air Toxics "Hot Spots" Information and Assessment Act of 1987 – currently regulates over 600 air compounds, including all of the Tanner-designated TACs. Under AB 2588, specified facilities must quantify emissions of regulated air toxics and report them to the local APCD. If the APCD determines that a potentially significant public health risk is posed by a given facility, the facility is required to perform a health risk assessment (HRA) and notify the public in the affected area if the calculated risks exceed specified criteria.

On August 27, 1998, CARB formally identified PM emitted in both gaseous and particulate forms by diesel-fueled engines as a TAC. The particles emitted by diesel engines are coated with chemicals, many of which have been identified by the USEPA as HAPs and by CARB as TACs. CARB's Scientific Advisory Committee has recommended a unit risk factor (URF) of 300 in 1 million over a 70-year exposure period for diesel particulate. In September 2000, the CARB approved the *Risk Reduction Plan to Reduce Particulate Matter Emissions from Diesel-Fueled Engines and Vehicles* (Diesel Risk Reduction Plan; CARB 2000). The Diesel Risk Reduction Plan outlined a comprehensive and ambitious program that included the development of numerous new control measures over the next several years aimed at substantially reducing emissions from new and existing on-road vehicles (e.g., heavy-duty trucks and buses), off-road equipment (e.g., graders, tractors, forklifts, sweepers, and boats), portable equipment (e.g., pumps), and stationary engines (e.g., stand-by power generators). These requirements are now in force on a state-wide basis.

2.2 CLIMATE AND METEOROLOGY

The climate in southern California, including the SDAB, is controlled largely by the strength and position of the subtropical high-pressure cell over the Pacific Ocean. Areas within 30 miles of the coast experience moderate temperatures and comfortable humidity.

The predominant wind direction in the vicinity of Project site is from the west and the average wind speed is approximately five mph (Iowa Environmental Mesonet [IEM] 2015). The annual average maximum temperature in the Project area is approximately 74 F, and the annual average minimum temperature is approximately 52ºF. Total precipitation in the Project area averages approximately 13 inches annually. Precipitation occurs mostly during the winter and relatively infrequently during the summer (Western Regional Climate Center [WRCC] 2015).

Due to its climate, the SDAB experiences frequent temperature inversions (temperature increases as altitude increases, which is the opposite of general patterns). Temperature inversions prevent air close to the ground from mixing with the air above it. As a result, air pollutants are trapped near the ground. During the summer, air quality problems are created due to the interaction between the ocean surface and the lower layer of the atmosphere, creating a moist marine layer. An upper layer of warm air mass forms over the cool marine layer, preventing air pollutants from dispersing upward. Additionally, hydrocarbons and NO_2 react under strong sunlight, creating smog. Light, daytime winds, predominantly from the west, further aggravate the condition by driving the air pollutants inland, toward the foothills. During the fall and winter, air quality problems are created due to CO and NO_2 emissions. High NO_2 levels usually occur during autumn or winter, on days with summer-like conditions.

2.3 EXISTING AIR QUALITY

2.3.1 Attainment Designations

Attainment designations are discussed in Section 2.1.1 and Table 2. The SDAB is classified as a marginal nonattainment area for the 8-hour NAAQS for ozone. The SDAB currently falls under a national "maintenance plan" for CO. The SDAB is currently classified as a nonattainment area

under the CAAQS for ozone (serious nonattainment), PM_{10}, and $PM_{2.5}$. The SDAB is an attainment area for all other criteria pollutants.

2.3.2 Monitored Air Quality

The SDAPCD operates a network of ambient air monitoring stations throughout the County. The purpose of the monitoring stations is to measure ambient concentrations of the pollutants and determine whether the ambient air quality meets the CAAQS and the NAAQS. The nearest ambient monitoring stations to the Project site is the San Diego – Beardsley Street monitoring station located at 1110 Beardsley Street. Air quality data for this monitoring station are shown in Table 3, *Air Quality Monitoring Data.*

Monitoring data at the San Diego – Beardsley Street station has had acceptable levels of the criteria air pollutants CO (8-hour), ozone (1-hour), and NO_2 for 2012 to 2014. The state 8-hour ozone standard was violated twice in 2014. The state 24-hour PM_{10} standard was violated once in 2013. The federal $PM_{2.5}$ standard was violated once in each of the years sampled.

Table 3
AIR QUALITY MONITORING DATA

Pollutant	2012	2013	2014
Ozone (O_3)			
Maximum 1-hour concentration (ppm)	0.071	0.063	0.093
Days above 1-hour state standard (>0.09 ppm)	0	0	0
Maximum 8-hour concentration (ppm)	0.065	0.053	0.073
Days above 8-hour state standard (>0.070 ppm)	0	0	2
Days above 8-hour federal standard (>0.075 ppm)	0	0	0
Carbon Monoxide (CO)			
Maximum 8-hour concentration (ppm)	1.81	*	*
Days above state or federal standard (>9.0 ppm)	0	0	0
Maximum 1-hour concentration (ppm)	3.2	3.5	*
Days above state standard (20 ppm)	0	0	0
Days above federal standard (35 ppm)	0	0	0
Respirable Particulate Matter (PM_{10})			
Maximum 24-hour concentration ($\mu g/m^3$)	47.0	92.0	41.0
Days above state standard (>50 $\mu g/m^3$)	0	1	0
Days above federal standard (>150 $\mu g/m^3$)	0	0	0
Fine Particulate Matter ($PM_{2.5}$)			
Maximum 24-hour concentration ($\mu g/m^3$)	39.8	37.4	36.7
Days above federal standard (>35 $\mu g/m^3$)	1	1	1
Nitrogen Dioxide (NO_2)			
Maximum 1-hour concentration (ppm)	0.065	0.072	0.075
Days above state 1-hour standard (0.18 ppm)	0	0	0

Source: CARB 2015b.
*Insufficient data available
ppm = parts per million, $\mu g/m^3$ = micrograms per cubic meter

3.0 METHODOLOGY AND THRESHOLDS OF SIGNIFICANCE

3.1 METHODOLOGY

Criteria pollutant emissions were calculated using the California Emissions Estimator Model (CalEEMod), Version 2013.2.2 (SCAQMD 2013). CalEEMod is a computer model used to estimate criteria air pollutant emissions resulting from land development projects throughout the state of California. CalEEMod was developed by SCAQMD with the input of several air quality management and pollution control districts.

In brief, CalEEMod is a computer model that estimates criteria air pollutant emissions from mobile (i.e., vehicular) sources, area sources (fireplaces, woodstoves, and landscape maintenance equipment), and energy use (natural gas used in space heating, ventilation, and cooling). Emissions are estimated based on land use information input to the model by the user.

In the first module, the user defines the specific land uses that will occur at the project site. The user also selects the appropriate land use setting (urban, suburban, or rural), operational year, location, climate zone, and utility provider. The input land uses, size features, and population are used throughout CalEEMod in determining default variables and calculations in each of the subsequent modules. The input land use information consists of land use subtypes and their unit or square footage quantities.

Subsequent modules include construction (including off-road vehicle emissions), mobile (on-road vehicle emissions), area sources (woodstoves, fireplaces, consumer products [cleansers, aerosols, solvents], landscape maintenance equipment, architectural coatings), water and wastewater, and solid waste. Each module comprises multiple components including an associated mitigation module to account for further reductions in the reported baseline calculations. Other inputs include trip generation rates, trip lengths, vehicle fleet mix (percentage autos, medium truck, etc.), trip distribution (i.e., percent work to home, etc.), duration of construction phases, construction equipment usage, and grading areas, as well as other parameters.

In various places the user can input additional information and/or override the default assumptions to account for project- or location-specific parameters. For this assessment the default parameters including vehicle trip lengths and energy intensity factors were not changed unless otherwise noted. The input data and reported criteria pollutant emission estimates based on these inputs are discussed below. The CalEEMod input and output files are included in Appendix A.

3.1.1 Construction Emissions

As described above, construction emissions are assessed using the CalEEMod, Version 2013.2.2. CalEEMod contains OFFROAD2011 emission factors and EMFAC2011 emission factors from CARB's models for off-road equipment and on-road vehicles, respectively. The construction analysis included modeling of the projected construction equipment that would be used during each construction activity and quantities of earth and debris to be moved.

Peak daily criteria pollutant emissions were estimated by modeling the most intense construction project included in the MPU. The student housing expansion project fronting Linda Vista Road (Project 23 in Figure 2) includes the demolition of approximately 28,500 square feet of existing buildings, excavation and export of approximately 9,260 cubic yards of soil, and construction of 329 student housing units. For "worst-case" modeling purposes, construction of this housing project is assumed to begin in January 2016 and be completed in April 2017. Demolition of the 28,500-square foot building would result in the generation of waste, some of which would be diverted and the remainder (an estimated tonnage of 1,311 tons of demolition debris) would be disposed of. Assuming each demolition haul truck can haul 20 tons of debris, demolition would require a total of 130 one-way truck trips (or 3 haul trucks per day) to haul away debris. One-way truck trips would travel from the project site to the spoils site and from the spoils site back to the project site. Excavation and export of the 9,260 cubic yards of soil during grading would require a total of 1,322 one-way truck trips, assuming each truck can haul 14 cubic yards of soil, resulting in 33 haul truck on a daily basis. The quantity, duration, and the intensity of construction activity have an effect on the amount of construction emissions and their related pollutant concentrations that occur at any one time. As such, the emission forecasts provided herein reflect a specific set of conservative assumptions based on the expected construction scenario wherein a relatively large amount of construction is occurring in a relatively intensive manner. Because of this conservative assumption, actual emissions could be less than those forecasted. If construction is delayed or occurs over a longer time period, emissions could be reduced because of (1) a more modern and cleaner-burning construction equipment fleet mix than incorporated in the CalEEMod, and/or (2) a less intensive buildout schedule (i.e., fewer daily emissions occurring over a longer time interval). Detailed construction phasing and equipment assumptions are provided in Appendix A.

3.1.2 Operation Emissions

Operational impacts were estimated using CalEEMod. Operational sources of emissions include area, energy, and transportation. Operational emissions from area sources include engine emissions from landscape maintenance equipment, and VOC emissions from repainting of buildings. Operational emissions from energy sources include the combustion of natural gas for heating and hot water. Operational emission estimates of the Project take into account energy efficiency in accordance 2013 Title 24.

Operational emissions from mobile source emissions are associated with Project-related vehicle trip generation. Based on the Traffic Impact Analysis (TIA; Linscott, Law & Greenspan Engineers [LLG] 2015), at full buildout the Project would generate 9,300 average daily trips (ADT). Default vehicle speeds, trip lengths, trip purpose, and trip type percentages for a four-year university were used. Model output data sheets are included in Appendix A.

3.2 SIGNIFICANCE CRITERIA

The City (2011) has approved guidelines for determining significance based on Appendix G of the State California Environmental Quality Act (CEQA) Guidelines, which provide guidance that a project would have a significant air quality environmental impact if it would:

1. Conflict with or obstruct implementation of the San Diego RAQS or applicable portions of the SIP;

2. Violate any air quality standard or contribute substantially to an existing or projected air quality violation;

3. Result in a cumulatively considerable net increase of any criteria pollutant for which the SDAB is nonattainment under an applicable federal or state ambient air quality standard (including releasing emissions which exceed quantitative thresholds for ozone precursors);

4. Expose sensitive receptors (i.e., day care centers, schools, retirement homes, and hospitals or medical patients in residential homes which could be impacted by air pollutants) to substantial pollutant concentrations; or

5. Create objectionable odors affecting a substantial number of people.

6. Release substantial quantities of air contaminants beyond the boundaries of the premises upon which the stationary source emitting the contaminants is located.

To determine whether a project would (a) result in emissions that would violate any air quality standard or contribute substantially to an existing or projected air quality violation; or (b) result in a cumulatively considerable net increase of PM_{10} or exceed quantitative thresholds for ozone precursors (i.e., NO_X and VOCs), project emissions may be evaluated based on the quantitative emission thresholds established by the SDAPCD. As part of its air quality permitting process, the SDAPCD has established thresholds in Rule 20.2 for the preparation of Air Quality Impact Assessments (AQIAs). In the absence of a SDAPCD adopted threshold for $PM_{2.5}$, the SCAQMD's screening threshold of 55 pounds per day or 10 tons per year is used.

For CEQA purposes, these screening criteria can be used as numeric methods to demonstrate that a project's total emissions would not result in a significant impact to air quality. The screening thresholds are included in Table 4, *Screening-level Thresholds for Air Quality Impact Analysis*.

Table 4 SCREENING-LEVEL THRESHOLDS FOR AIR QUALITY IMPACT ANALYSIS			
Pollutant	**Total Emissions**		
Construction Emissions (Pounds per Day)			
Respirable Particulate Matter (PM_{10})	100		
Fine Particulate Matter ($PM_{2.5}$)	55		
Oxides of Nitrogen (NO_X)	250		
Oxides of Sulfur (SO_X)	250		
Carbon Monoxide (CO)	550		
Volatile Organic Compounds (VOCs)	75		
Operational Emissions			
	Pounds per Hour	**Pounds per Day**	**Tons per Year**
Respirable Particulate Matter (PM_{10})	---	100	15
Fine Particulate Matter ($PM_{2.5}$)	---	55	10
Oxides of Nitrogen (NO_X)	25	250	40
Oxides of Sulfur (SO_X)	25	250	40
Carbon Monoxide (CO)	100	550	100
Lead and Lead Compounds	---	3.2	0.6
Volatile Organic Compounds (VOC)	---	75	13.7
Toxic Air Contaminant Emissions			
Excess Cancer Risk	1 in 1 million 10 in 1 million with T-BACT		
Non-Cancer Hazard	1.0		

Source: SDAPCD Rule 20.2 and Rule 1210.
T-BACT = Toxics-Best Available Control Technology

The State of California Health and Safety Code Sections 41700 and 41705, and SDAPCD Rule 51, commonly referred to as public nuisance law, prohibits emissions from any source whatsoever in such quantities of air contaminants or other material, which cause injury, detriment, nuisance, or annoyance to the public health or damage to property. The provisions of these regulations do not apply to odors emanating from agricultural operations necessary for the growing of crops or the raising of fowl or animals. It is generally accepted that the considerable number of persons requirement in Rule 51 is normally satisfied when 10 different individuals/households have made separate complaints within 90 days. Odor complaints from a "considerable" number of persons or businesses in the area will be considered to be a significant, adverse odor impact.

Every use and operation shall be conducted so that no unreasonable heat, odor, vapor, glare, vibration (displacement), dust, smoke, or other forms of air pollution subject to APCD standards of particulate matter shall be discernible at the USD campus property line.

Therefore, any unreasonable odor discernible at the property line of the campus will be considered a significant odor impact.

4.0 AIR QUALITY IMPACT ANALYSIS

This section evaluates potential direct impacts of the proposed Project related to the air pollutant emissions.

4.1 CONSISTENCY WITH AIR QUALITY PLANS

The SDAPCD is required, pursuant to the federal CAA, to reduce emissions of criteria pollutants for which the SDAB is in nonattainment. Strategies to achieve these emissions reductions are developed in the RAQS and SIP, prepared by the SDAPCD for the region. Both the RAQS and SIP are based on SANDAG population projections, as well as land use designations and population projections included in general plans for those communities located within the County. Population growth is typically associated with the construction of residential units or large employment centers.

A project would be inconsistent with the RAQS/SIP if it results in population and/or employment growth that exceed growth estimates for the area. The MPU would accommodate the increase in student enrollment at campus by renovating and building new classrooms, administrative and support facilities, housing and other university-related uses. The proposed USD MPU provides a comprehensive revision of the 1996 Master Plan and Design Guidelines, as well as the campus' building space and infrastructure needs associated with increasing enrollment from 7,000 FTE students to 10,000 FTE over the next 20+ years. While the MPU would allow for construction of new facilities that would accommodate additional student population and would contribute to transportation-generated air pollutants, this would generally be in response to population growth forecasts and the resulting county-wide housing and job demand. According to the SANDAG growth projections analysis, students are counted as part of the residential forecast in the categories of age, gender, and ethnicity. Preliminary growth forecasts by SANDAG show an increase of 31,832 residents by year 2035 and of 36,198 residents by year 2050 (SANDAG 2010).

The RAQS/SIP relies on the same information from the SANDAG growth forecast to develop emission inventories and emission reduction strategies that are included in the attainment demonstration for the air basin. It should be noted that the current population in San Diego County has not kept up with the projected population that was used as the basis for the RAQS/SIP. Also, it is important to note that the MPU would not increase population directly to the area; the campus would respond to regional growth. Because of the growth in the number of households forecasted in the SANDAG's growth forecast analysis, the increases in student enrollment at the USD campus would be accommodated in the regional population forecast used to prepare the RAQS/SIP.

Because the MPU would not generate population growth beyond the levels assumed for the region, the MPU would not conflict with any population projections for the region and would, therefore, be consistent with the RAQS/SIP. In addition, the MPU would comply with all existing and new rules and regulations as they are implemented by the SDAPCD, CARB, and/or USEPA related to emissions generated during construction. Therefore, the MPU would not conflict with the applicable air quality attainment plan, and no impacts to regional air quality would be anticipated.

4.2 CONFORMANCE TO FEDERAL AND STATE AIR QUALITY STANDARDS

The Project would generate criteria pollutants in the short term during construction and the long term during operation. To determine whether a project would result in emissions that would violate any air quality standard or contribute substantially to an existing or projected air quality violation, a project's emissions are evaluated based on the quantitative emission thresholds established by the SDAPCD (as shown in Table 4).

4.2.1 Construction

Project Emissions

As detailed in Section 3.1, peak daily criteria pollutant emissions were estimated by modeling the most intense construction project included in the MPU. The student housing expansion project fronting Linda Vista Road (Project 23 in Figure 2) includes the demolition of approximately 28,500 square feet of existing buildings, excavation and export of approximately 9,260 cubic yards of soil, and construction of 329 student housing units. For "worst-case" modeling purposes, construction of this housing project is assumed to begin in January 2016 and be completed in April 2017. If construction is delayed or occurs over a longer time period, emissions could be reduced because of (1) a more modern and cleaner-burning construction equipment fleet mix than incorporated in the CalEEMod, and/or (2) a less intensive buildout schedule (i.e., fewer daily emissions occurring over a longer time interval). It was assumed that demolition would require 130 one-way truck trips to haul away debris and grading would require 1,322 one-way truck trips, based on the quantity of material anticipated. Additional details of phasing, selection of construction equipment, and other input parameters, including CalEEMod data, are included in Appendix A.

The results of the calculations for Project construction are shown in Table 5, *Maximum Daily Construction Emissions*. The data are presented as the maximum anticipated daily construction emissions for comparison with the SDAPCD thresholds.

Table 5
MAXIMUM DAILY CONSTRUCTION EMISSIONS

Phase	Pollutant Emissions (pounds per day)					
	ROG	NO_X	CO	SO_X	PM_{10}	$PM_{2.5}$
Demolition	4	48	37	<1	3	2
Site Preparation	5	55	42	<1	11	7
Grading	5	58	44	<1	7	4
Building Construction	5	33	34	<1	4	2
Paving	2	20	15	<1	1	1
Architectural Coatings	52	2	4	<1	1	<1
Maximum Daily Emissions	**52**	**58**	**44**	**<1**	**11**	**7**
Thresholds	*75*	*250*	*550*	*250*	*100*	*55*
Significant Impact?	***No***	***No***	***No***	***No***	***No***	***No***

Source: CalEEMod (output data is provided in Appendix A)
Includes standard fugitive dust reduction measures.
Worst-case emissions would be associated with the student housing project proposed at Project Site 23.

As shown in Table 5, emissions of all criteria pollutants related to the worst-case construction scenario would be below the SDAPCD's significance thresholds. Emissions associated with the construction of the remainder of the MPU would be less than those forecasted for the worst-case scenario. Thus, direct impacts from criteria pollutants generated during construction would be less than significant.

4.2.2 Operation

Evaluation of operational emissions is analyzed based on the increase of emissions from the proposed MPU implementation, as discussed in Section 3.1.2, *Methodology*. As illustrated in Table 6, *Operation Daily Maximum Emissions – Proposed Project*, the increase of daily maximum operational emissions associated with the implementation of all projects and increase in student enrollment identified in the MPU would be below the SDAPCD's significance criteria for all criteria pollutants and would not result in a significant direct impact related to operational emissions. No mitigation would be required.

Table 6
OPERATION DAILY MAXIMUM EMISSIONS – PROPOSED PROJECT

Emission Source	Pollutant Emissions (pounds/day)					
	VOC	NO_X	CO	SO_X	PM_{10}	$PM_{2.5}$
Area	13	<1	<1	<1	<1	<1
Energy	<1	4	3	<1	<1	<1
Mobile	28	56	274	1	51	14
TOTAL	**42**	**60**	**277**	**1**	**51**	**14**
Thresholds	*75*	*250*	*550*	*250*	*100*	*55*
Significant Impact?	***No***	***No***	***No***	***No***	***No***	***No***

Source: CalEEMod (output data is provided in Appendix A)

4.3 CUMULATIVELY CONSIDERABLE NET INCREASE OF NONATTAINMENT CRITERIA POLLUTANTS

The region is a federal and/or state nonattainment area for PM_{10}, $PM_{2.5}$, and ozone. The MPU would contribute particulates and the ozone precursors VOC and NO_X to the area during short term Project construction. As described in Section 4.2.1, regional emissions during construction would not violate any air quality standard or contribute substantially to an existing or projected air quality violation. Construction emissions would be less than the significance thresholds (Table 5).

As shown in the Project construction emissions evaluation, the emissions of NO_X, VOCs, PM_{10}, and $PM_{2.5}$ would be below significance levels. Short-term cumulative impacts related to air quality could occur if construction of the Project and other projects in the surrounding area were to occur simultaneously. In particular, with respect to localized impacts, the consideration of cumulative construction particulate (PM_{10} and $PM_{2.5}$) impacts is limited to cases when projects constructed simultaneously are within a few hundred yards of each other because of (1) the combination of the short range (distance) of particulate dispersion (especially when compared to gaseous pollutants); and (2) the SDAPCD's required dust control measures which further limit particulate dispersion from a project site.

Among the projects outlined in the MPU are 16 entitled projects identified in the 1996 Master Plan FEIR that have previous City review/approvals but remain unbuilt. The 1996 Master Plan FEIR concluded that the USD Master Plan construction period emissions would result in a significant and unmitigable cumulative impact because of the non-attainment status of the SDAB and inability of one project to control emissions in the region. Because the Master Plan as analyzed in 1996 has not been fully built out and 16 projects remain unbuilt, any added projects would only exacerbate the cumulative effect. As such, the MPU would incrementally add to those construction period emissions and contribute to the cumulatively significant and unavoidable impacts disclosed in the previous EIR.

Long-term emissions, as shown above in Table 6, would be well below regional thresholds, and, therefore, not cumulatively considerable. The long-term cumulative impact would be less than significant.

4.4 IMPACTS TO SENSITIVE RECEPTORS

Impacts to sensitive receptors are typically analyzed for operational period CO hotspots and exposure to TACs. An analysis of the Project's potential to expose sensitive receptors to these pollutants is provided below.

4.4.1 Carbon Monoxide Hotspots

A CO hotspot is an area of localized CO pollution caused by severe vehicle congestion on major roadways, typically near intersections. A quantitative screening is required in two instances: (1) if a project increases the average delay at signalized intersections operating at Level of Service (LOS) E or F; or (2) if a project causes an intersection that would operate at LOS D or better without the project to operate at LOS E or F with the project. According to the Traffic Impact Analysis ([TIA] LLG 2016), four intersections would operate at LOS E or F and experience some increase in delay from the Project:

- Linda Vista Road at Napa Street,
- Linda Vista Road at Colusa Street,
- Linda Vista Road at the Alcalá Vista Apartments entrance, and
- Linda Vista Road at Genesee Avenue.

The *Transportation Project-Level Carbon Monoxide Protocol* (Caltrans 1998) requires the modeler to model the intersections that have worst LOS and the highest traffic volumes. If the selected intersections do not show an exceedance of the NAAQS, none of the other affected intersections will. Some intersections may fall into both the highest traffic volumes and worst LOS categories. As recommended in the Protocol, receptors were located at locations that were approximately 3 meters (10 feet) from the mixing zone, and at a height of 1.8 meters (6 feet). Emission factors from the EMFAC2011 model for the year 2020, speeds ranging from 5 to 20 mph, at a temperature of 60°F, and 50 percent humidity were used in the CALINE4 model.

In accordance with the Protocol, it is also necessary to estimate future background CO concentrations in the Project vicinity to determine the potential impact plus background and

evaluate the potential for CO hotspots due to the Project. The second highest 1-hour and 8-hour background concentrations of CO of 3.2 and 1.81 ppm were used to represent future maximum background 1-hour and 8-hour CO concentrations, as presented earlier in Table 3. CO concentrations in the future may be lower as inspection and maintenance programs and more stringent emission controls are placed on vehicles.

Modeled 1-hour CO concentrations were scaled to evaluate maximum predicted 8-hour CO concentrations using the recommended persistence scaling factor of 0.7 for urban locations. The CALINE4 model outputs are provided at the end of Appendix A of this report. Table 7, *CO Hotspots Modeling Results*, presents a summary of the predicted CO concentrations (impact plus background) for the intersections evaluated. As shown in Table 7, the predicted CO concentrations would be substantially below the 1-hour and 8-hour NAAQS and CAAQS for CO. Therefore, no exceedances of the CO standard are predicted, and the Project would not cause or contribute to a violation of the air quality standard. The Project would not result in a significant cumulative impact for CO.

Table 7
CO HOTSPOTS MODELING RESULTS

Intersection	Peak Period	Maximum 1-hour with Project Concentration	Maximum 8-hour with Project Concentration
Linda Vista Rd at Napa St.	AM	3.6	2.1
	PM	4.0	2.4
Linda Vista Rd at Colusa St.	AM	3.4	2.0
	PM	3.5	2.0
Linda Vista Rd at Alcalá Vista Apartments Entrance	AM	3.7	2.2
	PM	3.7	2.2
Linda Vista Rd at Genesee Ave.	AM	4.2	2.5
	PM	4.3	2.6
Ambient Air Quality Standard		*20*	*9.0*
Significant Impact?		*No*	*No*

Notes:
CALINE4 dispersion model output sheets and EMFAC2011 emission factors are provided in Appendix B.
Peak hour traffic volumes are based on the TIA prepared for the Project by LLG 2015.
Second highest 3 years SDAPCD (2012-2014) 1-hour ambient background concentration (3.2 ppm) + 2020 modeled CO 1-hour contribution.
Second highest 3 years SDAPCD 8-hour ambient background concentration (1.81 ppm) multiply by 1-hour/8-hour conversion factor of 0.7 and then add the 2020 modeled CO 8-hour contribution.
ppm = parts per million

4.4.2 Exposure to Toxic Air Contaminants

Construction activities would result in short-term, Project-generated emissions of diesel PM from the exhaust of off-road, heavy-duty diesel equipment. CARB identified diesel PM as a TAC in 1998. The dose to which receptors are exposed is the primary factor used to determine health risk. Dose is a function of the concentration of a substance or substances in the environment and the duration of exposure to the substance. Thus, the risks estimated for a maximally exposed individual (MEI) are higher if a fixed exposure occurs over a longer time period. According to the Office of Environmental Health Hazard Assessment, HRAs, which determine the exposure of

sensitive receptors to TAC emissions, should be based on a 70-year exposure period; however, such assessments should be limited to the period/duration of activities associated with the Project.

There would be relatively few pieces of off-road, heavy-duty diesel construction equipment in operation, and the construction period would be relatively short, especially when compared to 70 years. Combined with the highly dispersive properties of diesel PM, distance from sensitive receptors, and additional reductions in exhaust emissions from improved equipment, construction-related emissions would not expose sensitive receptors to substantial emissions of TACs. The impact would be less than significant.

With regard to long-term operations, it is not currently known if any of the uses proposed by the MPU would include any new sources of TACs. Subsequent projects that include new stationary sources (such as laboratory buildings) would need to analyze specific operation-related TAC impacts to ensure that emissions remain below SDAPCD thresholds. Due of the potential of individual projects to include new sources of TACs, implementation of the MPU would result in potentially significant impacts related to TAC emissions.

Mitigation Measures

Implementation of the following mitigation measure would help reduce stationary source impacts. However, the ability of this measure to reduce stationary source impacts to less than significant cannot be determined at this time.

AQ-1 Health Risk Assessment. Prior to the issuance of building permits for any new facility that would have the potential to emit TACs, in accordance with AB 2588, an emissions inventory and health risk assessment shall be prepared. Building permits shall only be issued for facilities that demonstrate TAC emissions below the standards listed in Table 4 (excess cancer risk of 1 in 1 million or 10 in 1 million with Toxics-Best Available Control Technology [T-BACT] and non-cancer hazard index of 1.0).

Significance with Mitigation

Implementation of Mitigation Measure AQ-1 would ensure impacts from new stationary sources would be less than significant.

4.5 ODORS

As discussed above, the State of California Health and Safety Code Sections 41700 and 41705, and SDAPCD Rule 51, prohibit emissions from any source whatsoever in such quantities of air contaminants or other material which cause injury, detriment, nuisance, or annoyance to the public health or damage to property. Any unreasonable odor discernible at the property line of the Project site will be considered a significant odor impact.

Project construction could result in minor amounts of odor compounds associated with diesel heavy equipment exhaust. Diesel exhaust and VOCs would be emitted during construction of the Project. The odors of these emissions are objectionable to some; however, emissions would disperse rapidly from the campus property and therefore should not be at a level that would

affect a substantial number of people. Further, construction operations would be temporary. As a result, impacts associated with odors during construction are not considered significant.

According to the SCAQMD CEQA Air Quality Handbook, land uses associated with odor complaints include agricultural uses, wastewater treatment plants, food processing plants, chemical plants, composting activities, refineries, landfills, dairies, and fiberglass molding operations. The Project would not place sensitive receptors within a close proximity to the listed odor sources. In addition, campus developments under the MPU would not be a source of odor impacts, as the operation of university-related uses are not associated with odors. Impacts associated with odor sources are considered less than significant.

4.6 NEW STATIONARY SOURCES

As discussed previously under Section 4.4.2, it is not currently known if any of the uses proposed by the MPU would include any new stationary sources. Subsequent projects that include new stationary sources (such as laboratory buildings) would need to analyze specific operation-related TAC impacts to ensure that emissions remain below SDAPCD thresholds. Due to the potential of individual projects to include new sources of TACs, implementation of the MPU would result in potentially significant impacts related to TAC emissions generated by new stationary sources.

Mitigation Measures

Implementation of the Mitigation Measure AQ-1, identified above, would ensure stationary source impacts are less than significant.

Significance with Mitigation

Implementation of Mitigation Measure AQ-1 would ensure impacts from new stationary sources would be less than significant.

5.0 REFERENCES

California Air Resources Board (CARB). 2015a. *Area Designations: Activities and Maps*. Accessed October 2015. Available at: http://www.arb.ca.gov/desig/adm/adm.htm.

2015b *Top 4 Measurements and Days Above the Standard.* Available at: http://www.arb.ca.gov/adam/topfour/topfour1.php. Accessed October 2015.

2015c *Ambient Air Quality Standards.* October 1. Available at: http://www.arb.ca.gov/research/aaqs/aaqs2.pdf.

2009 *ARB Fact Sheet: Air Pollution and Health*. December 2. Available at: http://www.arb.ca.gov/research/health/fs/fs1/fs1.htm

2000 Diesel Risk Reduction Plan. September.

California Department of Transportation (Caltrans). 1998. Caltrans ITS Transportation Project-Level Carbon Monoxide Protocol.

City of San Diego. 2011. California Environmental Quality Act Significance Determination Thresholds. Development Services Department.

Iowa Environmental Mesonet (IEM). 2015. San Diego/Gillespie Windrose Plot. Available at: http://mesonet.agron.iastate.edu/sites/windrose.phtml?station=SEE&network=CA_ASOS

Linscott, Law & Greenspan, Engineers (LLG). 2015. Traffic Impact Analysis – University of San Diego Master Plan Update. November.

San Diego Association of Governments (SANDAG). 2010. Land Use and Regional Growth. 2050 Regional Growth Forecast. Available at: http://www.sandag.org/index.asp?projectid=355&fuseaction=projects.detail.

2004 Final Regional Comprehensive Plan for the San Diego Region. July 23. Available at: http://www.sandag.org/programs/land_use_and_regional_growth/comprehensive_land_use_and_regional_growth_projects/RCP/rcp_final_complete.pdf

San Diego County Air Pollution Control District (SDAPCD). 2010. Fact Sheet: Attainment Status. Available at: http://www.sdapcd.org/info/facts/attain.pdf. January.

South Coast Air Quality Management District (SCAQMD). 2013. California Emission Estimator Model (CalEEMod) Version 2013.2.2. Released October.

U.S. Environmental Protection Agency (USEPA). 2007. *The Effects of Air Pollutants – Health Effects.* Available at: http://www.epa.gov/air/oaqps/eog/course422/ap7a.html#table.

Western Regional Climate Center (WRCC). 2015. Western U.S. Climate Summaries, California, San Diego County (049378).

Appendix A

CALEEMOD OUTPUT DATA

USD Worst Case Construction

San Diego County, Winter

1.0 Project Characteristics

1.1 Land Usage

Land Uses	Size	Metric	Lot Acreage	Floor Surface Area	Population
Apartments High Rise	329.00	Dwelling Unit	5.31	329,000.00	941

1.2 Other Project Characteristics

Urbanization	Urban	**Wind Speed (m/s)**	2.6	**Precipitation Freq (Days)**	40
Climate Zone	13			**Operational Year**	2014
Utility Company					
CO2 Intensity (lb/MWhr)	0	**CH4 Intensity (lb/MWhr)**	0	**N2O Intensity (lb/MWhr)**	0

1.3 User Entered Comments & Non-Default Data

Project Characteristics -

Land Use -

Construction Phase - Worst-case construction

Demolition -

Architectural Coating - Rule 67.0

Construction Off-road Equipment Mitigation -

Table Name	Column Name	Default Value	New Value
tblArchitecturalCoating	EF_Residential_Exterior	250.00	50.00
tblArchitecturalCoating	EF_Residential_Interior	250.00	50.00
tblConstructionPhase	NumDays	20.00	40.00

2.0 Emissions Summary

2.1 Overall Construction (Maximum Daily Emission)

Unmitigated Construction

	ROG	NOx	CO	SO2	Fugitive PM10	Exhaust PM10	PM10 Total	Fugitive PM2.5	Exhaust PM2.5	PM2.5 Total	Bio- CO2	NBio- CO2	Total CO2	CH4	N2O	CO2e
Year	lb/day										lb/day					
2016	5.1438	54.7152	41.8876	0.0583	18.2141	2.9398	21.1539	9.9699	2.7046	12.6745						
2017	51.9560	30.4336	32.3629	0.0582	2.1792	1.8394	4.0186	0.5827	1.7265	2.3092						
Total	**57.0997**	**85.1487**	**74.2505**	**0.1165**	**20.3933**	**4.7791**	**25.1725**	**10.5526**	**4.4311**	**14.9837**						

Mitigated Construction

	ROG	NOx	CO	SO2	Fugitive PM10	Exhaust PM10	PM10 Total	Fugitive PM2.5	Exhaust PM2.5	PM2.5 Total	Bio- CO2	NBio- CO2	Total CO2	CH4	N2O	CO2e
Year	lb/day										lb/day					
2016	5.1438	54.7152	41.8876	0.0583	8.2777	2.9398	11.2175	4.5080	2.7046	7.2126						
2017	51.9560	30.4336	32.3629	0.0582	2.1792	1.8394	4.0186	0.5827	1.7265	2.3092						
Total	**57.0997**	**85.1487**	**74.2505**	**0.1165**	**10.4569**	**4.7791**	**15.2360**	**5.0907**	**4.4311**	**9.5218**						

	ROG	NOx	CO	SO2	Fugitive PM10	Exhaust PM10	PM10 Total	Fugitive PM2.5	Exhaust PM2.5	PM2.5 Total	Bio- CO2	NBio-CO2	Total CO2	CH4	N20	CO2e
Percent Reduction	**0.00**	**0.00**	**0.00**	**0.00**	**48.72**	**0.00**	**39.47**	**51.76**	**0.00**	**36.45**	**0.00**	**0.00**	**0.00**	**0.00**	**0.00**	**0.00**

2.2 Overall Operational

Unmitigated Operational

	ROG	NOx	CO	SO2	Fugitive PM10	Exhaust PM10	PM10 Total	Fugitive PM2.5	Exhaust PM2.5	PM2.5 Total	Bio- CO2	NBio- CO2	Total CO2	CH4	N2O	CO2e
Category	lb/day										lb/day					
Area	514.2674	7.1607	648.0638	0.2437		87.2901	87.2901		87.2876	87.2876						
Energy	0.0533	0.4554	0.1938	2.9100e-003		0.0368	0.0368		0.0368	0.0368						
Mobile	11.2890	26.5945	118.2655	0.2001	14.2276	0.3745	14.6021	3.7977	0.3438	4.1415						
Total	**525.6096**	**34.2106**	**766.5231**	**0.4467**	**14.2276**	**87.7015**	**101.9290**	**3.7977**	**87.6682**	**91.4659**						

Mitigated Operational

	ROG	NOx	CO	SO2	Fugitive PM10	Exhaust PM10	PM10 Total	Fugitive PM2.5	Exhaust PM2.5	PM2.5 Total	Bio- CO2	NBio- CO2	Total CO2	CH4	N2O	CO2e
Category	lb/day										lb/day					
Area	514.2674	7.1607	648.0638	0.2437		87.2901	87.2901		87.2876	87.2876						
Energy	0.0533	0.4554	0.1938	2.9100e-003		0.0368	0.0368		0.0368	0.0368						
Mobile	11.2890	26.5945	118.2655	0.2001	14.2276	0.3745	14.6021	3.7977	0.3438	4.1415						
Total	**525.6096**	**34.2106**	**766.5231**	**0.4467**	**14.2276**	**87.7015**	**101.9290**	**3.7977**	**87.6682**	**91.4659**						

	ROG	NOx	CO	SO2	Fugitive PM10	Exhaust PM10	PM10 Total	Fugitive PM2.5	Exhaust PM2.5	PM2.5 Total	Bio- CO2	NBio-CO2	Total CO2	CH4	N20	CO2e
Percent Reduction	**0.00**	**0.00**	**0.00**	**0.00**	**0.00**	**0.00**	**0.00**	**0.00**	**0.00**	**0.00**	**0.00**	**0.00**	**0.00**	**0.00**	**0.00**	**0.00**

3.0 Construction Detail

Construction Phase

Phase Number	Phase Name	Phase Type	Start Date	End Date	Num Days Week	Num Days	Phase Description
1	Demolition	Demolition	1/1/2016	1/28/2016	5	20	
2	Site Preparation	Site Preparation	1/29/2016	2/11/2016	5	10	
3	Grading	Grading	2/12/2016	3/10/2016	5	20	
4	Building Construction	Building Construction	3/11/2016	1/26/2017	5	230	
5	Paving	Paving	1/27/2017	2/23/2017	5	20	
6	Architectural Coating	Architectural Coating	2/24/2017	4/20/2017	5	40	

Acres of Grading (Site Preparation Phase): 0

Acres of Grading (Grading Phase): 10

Acres of Paving: 0

Residential Indoor: 666,225; Residential Outdoor: 222,075; Non-Residential Indoor: 0; Non-Residential Outdoor: 0 (Architectural Coating – sqft)

OffRoad Equipment

Phase Name	Offroad Equipment Type	Amount	Usage Hours	Horse Power	Load Factor
Architectural Coating	Air Compressors	1	6.00	78	0.48
Demolition	Excavators	3	8.00	162	0.38
Demolition	Concrete/Industrial Saws	1	8.00	81	0.73
Grading	Excavators	1	8.00	162	0.38
Building Construction	Cranes	1	7.00	226	0.29
Building Construction	Forklifts	3	8.00	89	0.20
Building Construction	Generator Sets	1	8.00	84	0.74
Paving	Pavers	2	8.00	125	0.42
Paving	Rollers	2	8.00	80	0.38
Demolition	Rubber Tired Dozers	2	8.00	255	0.40
Grading	Rubber Tired Dozers	1	8.00	255	0.40
Building Construction	Tractors/Loaders/Backhoes	3	7.00	97	0.37
Grading	Graders	1	8.00	174	0.41
Grading	Tractors/Loaders/Backhoes	3	8.00	97	0.37
Paving	Paving Equipment	2	8.00	130	0.36
Site Preparation	Tractors/Loaders/Backhoes	4	8.00	97	0.37
Site Preparation	Rubber Tired Dozers	3	8.00	255	0.40
Building Construction	Welders	1	8.00	46	0.45

Trips and VMT

Phase Name	Offroad Equipment Count	Worker Trip Number	Vendor Trip Number	Hauling Trip Number	Worker Trip Length	Vendor Trip Length	Hauling Trip Length	Worker Vehicle Class	Vendor Vehicle Class	Hauling Vehicle Class
Demolition	6	15.00	0.00	130.00	10.80	7.30	20.00	LD_Mix	HDT_Mix	HHDT
Site Preparation	7	18.00	0.00	0.00	10.80	7.30	20.00	LD_Mix	HDT_Mix	HHDT
Grading	6	15.00	0.00	0.00	10.80	7.30	20.00	LD_Mix	HDT_Mix	HHDT
Building Construction	9	237.00	35.00	0.00	10.80	7.30	20.00	LD_Mix	HDT_Mix	HHDT
Paving	6	15.00	0.00	0.00	10.80	7.30	20.00	LD_Mix	HDT_Mix	HHDT
Architectural Coating	1	47.00	0.00	0.00	10.80	7.30	20.00	LD_Mix	HDT_Mix	HHDT

3.1 Mitigation Measures Construction

Water Exposed Area

Clean Paved Roads

3.2 Demolition - 2016

Unmitigated Construction On-Site

	ROG	NOx	CO	SO2	Fugitive PM10	Exhaust PM10	PM10 Total	Fugitive PM2.5	Exhaust PM2.5	PM2.5 Total	Bio- CO2	NBio- CO2	Total CO2	CH4	N2O	CO2e
Category	lb/day										lb/day					
Fugitive Dust					1.4230	0.0000	1.4230	0.2155	0.0000	0.2155						
Off-Road	4.2876	45.6559	35.0303	0.0399		2.2921	2.2921		2.1365	2.1365						
Total	**4.2876**	**45.6559**	**35.0303**	**0.0399**	**1.4230**	**2.2921**	**3.7151**	**0.2155**	**2.1365**	**2.3520**						

3.2 Demolition - 2016

Unmitigated Construction Off-Site

	ROG	NOx	CO	SO2	Fugitive PM10	Exhaust PM10	PM10 Total	Fugitive PM2.5	Exhaust PM2.5	PM2.5 Total	Bio- CO2	NBio- CO2	Total CO2	CH4	N2O	CO2e
Category	lb/day										lb/day					
Hauling	0.1418	1.8803	1.6798	4.8600e-003	0.1133	0.0250	0.1382	0.0310	0.0230	0.0540						
Vendor	0.0000	0.0000	0.0000	0.0000	0.0000	0.0000	0.0000	0.0000	0.0000	0.0000						
Worker	0.0556	0.0690	0.6519	1.4700e-003	0.1232	9.2000e-004	0.1242	0.0327	8.5000e-004	0.0335						
Total	**0.1974**	**1.9493**	**2.3318**	**6.3300e-003**	**0.2365**	**0.0259**	**0.2624**	**0.0637**	**0.0238**	**0.0875**						

Mitigated Construction On-Site

	ROG	NOx	CO	SO2	Fugitive PM10	Exhaust PM10	PM10 Total	Fugitive PM2.5	Exhaust PM2.5	PM2.5 Total	Bio- CO2	NBio- CO2	Total CO2	CH4	N2O	CO2e
Category	lb/day										lb/day					
Fugitive Dust					0.6403	0.0000	0.6403	0.0970	0.0000	0.0970						
Off-Road	4.2876	45.6559	35.0303	0.0399		2.2921	2.2921		2.1365	2.1365						
Total	**4.2876**	**45.6559**	**35.0303**	**0.0399**	**0.6403**	**2.2921**	**2.9325**	**0.0970**	**2.1365**	**2.2335**						

3.2 Demolition - 2016

Mitigated Construction Off-Site

	ROG	NOx	CO	SO2	Fugitive PM10	Exhaust PM10	PM10 Total	Fugitive PM2.5	Exhaust PM2.5	PM2.5 Total	Bio- CO2	NBio- CO2	Total CO2	CH4	N2O	CO2e
Category	lb/day										lb/day					
Hauling	0.1418	1.8803	1.6798	4.8600e-003	0.1133	0.0250	0.1382	0.0310	0.0230	0.0540						
Vendor	0.0000	0.0000	0.0000	0.0000	0.0000	0.0000	0.0000	0.0000	0.0000	0.0000						
Worker	0.0556	0.0690	0.6519	1.4700e-003	0.1232	9.2000e-004	0.1242	0.0327	8.5000e-004	0.0335						
Total	**0.1974**	**1.9493**	**2.3318**	**6.3300e-003**	**0.2365**	**0.0259**	**0.2624**	**0.0637**	**0.0238**	**0.0875**						

3.3 Site Preparation - 2016

Unmitigated Construction On-Site

	ROG	NOx	CO	SO2	Fugitive PM10	Exhaust PM10	PM10 Total	Fugitive PM2.5	Exhaust PM2.5	PM2.5 Total	Bio- CO2	NBio- CO2	Total CO2	CH4	N2O	CO2e
Category	lb/day										lb/day					
Fugitive Dust					18.0663	0.0000	18.0663	9.9307	0.0000	9.9307						
Off-Road	5.0771	54.6323	41.1053	0.0391		2.9387	2.9387		2.7036	2.7036						
Total	**5.0771**	**54.6323**	**41.1053**	**0.0391**	**18.0663**	**2.9387**	**21.0049**	**9.9307**	**2.7036**	**12.6343**						

3.3 Site Preparation - 2016

Unmitigated Construction Off-Site

	ROG	NOx	CO	SO2	Fugitive PM10	Exhaust PM10	PM10 Total	Fugitive PM2.5	Exhaust PM2.5	PM2.5 Total	Bio- CO2	NBio- CO2	Total CO2	CH4	N2O	CO2e
Category	lb/day										lb/day					
Hauling	0.0000	0.0000	0.0000	0.0000	0.0000	0.0000	0.0000	0.0000	0.0000	0.0000						
Vendor	0.0000	0.0000	0.0000	0.0000	0.0000	0.0000	0.0000	0.0000	0.0000	0.0000						
Worker	0.0667	0.0829	0.7823	1.7600e-003	0.1479	1.1100e-003	0.1490	0.0392	1.0200e-003	0.0402						
Total	**0.0667**	**0.0829**	**0.7823**	**1.7600e-003**	**0.1479**	**1.1100e-003**	**0.1490**	**0.0392**	**1.0200e-003**	**0.0402**						

Mitigated Construction On-Site

	ROG	NOx	CO	SO2	Fugitive PM10	Exhaust PM10	PM10 Total	Fugitive PM2.5	Exhaust PM2.5	PM2.5 Total	Bio- CO2	NBio- CO2	Total CO2	CH4	N2O	CO2e
Category	lb/day										lb/day					
Fugitive Dust					8.1298	0.0000	8.1298	4.4688	0.0000	4.4688						
Off-Road	5.0771	54.6323	41.1053	0.0391		2.9387	2.9387		2.7036	2.7036						
Total	**5.0771**	**54.6323**	**41.1053**	**0.0391**	**8.1298**	**2.9387**	**11.0685**	**4.4688**	**2.7036**	**7.1724**						

3.3 Site Preparation - 2016

Mitigated Construction Off-Site

	ROG	NOx	CO	SO2	Fugitive PM10	Exhaust PM10	PM10 Total	Fugitive PM2.5	Exhaust PM2.5	PM2.5 Total	Bio- CO2	NBio- CO2	Total CO2	CH4	N2O	CO2e
Category	lb/day										lb/day					
Hauling	0.0000	0.0000	0.0000	0.0000	0.0000	0.0000	0.0000	0.0000	0.0000	0.0000						
Vendor	0.0000	0.0000	0.0000	0.0000	0.0000	0.0000	0.0000	0.0000	0.0000	0.0000						
Worker	0.0667	0.0829	0.7823	1.7600e-003	0.1479	1.1100e-003	0.1490	0.0392	1.0200e-003	0.0402						
Total	**0.0667**	**0.0829**	**0.7823**	**1.7600e-003**	**0.1479**	**1.1100e-003**	**0.1490**	**0.0392**	**1.0200e-003**	**0.0402**						

3.4 Grading - 2016

Unmitigated Construction On-Site

	ROG	NOx	CO	SO2	Fugitive PM10	Exhaust PM10	PM10 Total	Fugitive PM2.5	Exhaust PM2.5	PM2.5 Total	Bio- CO2	NBio- CO2	Total CO2	CH4	N2O	CO2e
Category	lb/day										lb/day					
Fugitive Dust					6.5523	0.0000	6.5523	3.3675	0.0000	3.3675						
Off-Road	3.6669	38.4466	26.0787	0.0298		2.1984	2.1984		2.0225	2.0225						
Total	**3.6669**	**38.4466**	**26.0787**	**0.0298**	**6.5523**	**2.1984**	**8.7507**	**3.3675**	**2.0225**	**5.3900**						

3.4 Grading - 2016

Unmitigated Construction Off-Site

	ROG	NOx	CO	SO2	Fugitive PM10	Exhaust PM10	PM10 Total	Fugitive PM2.5	Exhaust PM2.5	PM2.5 Total	Bio- CO2	NBio- CO2	Total CO2	CH4	N2O	CO2e
Category	lb/day										lb/day					
Hauling	0.0000	0.0000	0.0000	0.0000	0.0000	0.0000	0.0000	0.0000	0.0000	0.0000						
Vendor	0.0000	0.0000	0.0000	0.0000	0.0000	0.0000	0.0000	0.0000	0.0000	0.0000						
Worker	0.0556	0.0690	0.6519	1.4700e-003	0.1232	9.2000e-004	0.1242	0.0327	8.5000e-004	0.0335						
Total	**0.0556**	**0.0690**	**0.6519**	**1.4700e-003**	**0.1232**	**9.2000e-004**	**0.1242**	**0.0327**	**8.5000e-004**	**0.0335**						

Mitigated Construction On-Site

	ROG	NOx	CO	SO2	Fugitive PM10	Exhaust PM10	PM10 Total	Fugitive PM2.5	Exhaust PM2.5	PM2.5 Total	Bio- CO2	NBio- CO2	Total CO2	CH4	N2O	CO2e
Category	lb/day										lb/day					
Fugitive Dust					2.9486	0.0000	2.9486	1.5154	0.0000	1.5154						
Off-Road	3.6669	38.4466	26.0787	0.0298		2.1984	2.1984		2.0225	2.0225						
Total	**3.6669**	**38.4466**	**26.0787**	**0.0298**	**2.9486**	**2.1984**	**5.1470**	**1.5154**	**2.0225**	**3.5379**						

3.4 Grading - 2016

Mitigated Construction Off-Site

	ROG	NOx	CO	SO2	Fugitive PM10	Exhaust PM10	PM10 Total	Fugitive PM2.5	Exhaust PM2.5	PM2.5 Total	Bio- CO2	NBio- CO2	Total CO2	CH4	N2O	CO2e
Category	lb/day										lb/day					
Hauling	0.0000	0.0000	0.0000	0.0000	0.0000	0.0000	0.0000	0.0000	0.0000	0.0000						
Vendor	0.0000	0.0000	0.0000	0.0000	0.0000	0.0000	0.0000	0.0000	0.0000	0.0000						
Worker	0.0556	0.0690	0.6519	1.4700e-003	0.1232	9.2000e-004	0.1242	0.0327	8.5000e-004	0.0335						
Total	**0.0556**	**0.0690**	**0.6519**	**1.4700e-003**	**0.1232**	**9.2000e-004**	**0.1242**	**0.0327**	**8.5000e-004**	**0.0335**						

3.5 Building Construction - 2016

Unmitigated Construction On-Site

	ROG	NOx	CO	SO2	Fugitive PM10	Exhaust PM10	PM10 Total	Fugitive PM2.5	Exhaust PM2.5	PM2.5 Total	Bio- CO2	NBio- CO2	Total CO2	CH4	N2O	CO2e
Category	lb/day										lb/day					
Off-Road	3.4062	28.5063	18.5066	0.0268		1.9674	1.9674		1.8485	1.8485						
Total	**3.4062**	**28.5063**	**18.5066**	**0.0268**		**1.9674**	**1.9674**		**1.8485**	**1.8485**						

3.5 Building Construction - 2016

Unmitigated Construction Off-Site

	ROG	NOx	CO	SO2	Fugitive PM10	Exhaust PM10	PM10 Total	Fugitive PM2.5	Exhaust PM2.5	PM2.5 Total	Bio- CO2	NBio- CO2	Total CO2	CH4	N2O	CO2e
Category	lb/day										lb/day					
Hauling	0.0000	0.0000	0.0000	0.0000	0.0000	0.0000	0.0000	0.0000	0.0000	0.0000						
Vendor	0.4224	3.3974	5.2399	8.2900e-003	0.2323	0.0507	0.2830	0.0663	0.0466	0.1129						
Worker	0.8782	1.0909	10.3006	0.0232	1.9469	0.0146	1.9615	0.5164	0.0134	0.5298						
Total	**1.3006**	**4.4883**	**15.5405**	**0.0315**	**2.1792**	**0.0653**	**2.2445**	**0.5827**	**0.0600**	**0.6427**						

Mitigated Construction On-Site

	ROG	NOx	CO	SO2	Fugitive PM10	Exhaust PM10	PM10 Total	Fugitive PM2.5	Exhaust PM2.5	PM2.5 Total	Bio- CO2	NBio- CO2	Total CO2	CH4	N2O	CO2e
Category	lb/day										lb/day					
Off-Road	3.4062	28.5063	18.5066	0.0268		1.9674	1.9674		1.8485	1.8485						
Total	**3.4062**	**28.5063**	**18.5066**	**0.0268**		**1.9674**	**1.9674**		**1.8485**	**1.8485**						

3.5 Building Construction - 2016

Mitigated Construction Off-Site

	ROG	NOx	CO	SO2	Fugitive PM10	Exhaust PM10	PM10 Total	Fugitive PM2.5	Exhaust PM2.5	PM2.5 Total	Bio- CO2	NBio- CO2	Total CO2	CH4	N2O	CO2e
Category	lb/day										lb/day					
Hauling	0.0000	0.0000	0.0000	0.0000	0.0000	0.0000	0.0000	0.0000	0.0000	0.0000						
Vendor	0.4224	3.3974	5.2399	8.2900e-003	0.2323	0.0507	0.2830	0.0663	0.0466	0.1129						
Worker	0.8782	1.0909	10.3006	0.0232	1.9469	0.0146	1.9615	0.5164	0.0134	0.5298						
Total	**1.3006**	**4.4883**	**15.5405**	**0.0315**	**2.1792**	**0.0653**	**2.2445**	**0.5827**	**0.0600**	**0.6427**						

3.5 Building Construction - 2017

Unmitigated Construction On-Site

	ROG	NOx	CO	SO2	Fugitive PM10	Exhaust PM10	PM10 Total	Fugitive PM2.5	Exhaust PM2.5	PM2.5 Total	Bio- CO2	NBio- CO2	Total CO2	CH4	N2O	CO2e
Category	lb/day										lb/day					
Off-Road	3.1024	26.4057	18.1291	0.0268		1.7812	1.7812		1.6730	1.6730						
Total	**3.1024**	**26.4057**	**18.1291**	**0.0268**		**1.7812**	**1.7812**		**1.6730**	**1.6730**						

3.5 Building Construction - 2017

Unmitigated Construction Off-Site

	ROG	NOx	CO	SO2	Fugitive PM10	Exhaust PM10	PM10 Total	Fugitive PM2.5	Exhaust PM2.5	PM2.5 Total	Bio- CO2	NBio- CO2	Total CO2	CH4	N2O	CO2e
Category	lb/day										lb/day					
Hauling	0.0000	0.0000	0.0000	0.0000	0.0000	0.0000	0.0000	0.0000	0.0000	0.0000						
Vendor	0.3860	3.0365	4.9630	8.2700e-003	0.2323	0.0440	0.2763	0.0663	0.0405	0.1067						
Worker	0.7956	0.9914	9.2707	0.0232	1.9469	0.0142	1.9611	0.5164	0.0131	0.5295						
Total	**1.1816**	**4.0279**	**14.2338**	**0.0314**	**2.1792**	**0.0581**	**2.2374**	**0.5827**	**0.0535**	**0.6362**						

Mitigated Construction On-Site

	ROG	NOx	CO	SO2	Fugitive PM10	Exhaust PM10	PM10 Total	Fugitive PM2.5	Exhaust PM2.5	PM2.5 Total	Bio- CO2	NBio- CO2	Total CO2	CH4	N2O	CO2e
Category	lb/day										lb/day					
Off-Road	3.1024	26.4057	18.1291	0.0268		1.7812	1.7812		1.6730	1.6730						
Total	**3.1024**	**26.4057**	**18.1291**	**0.0268**		**1.7812**	**1.7812**		**1.6730**	**1.6730**						

3.5 Building Construction - 2017

Mitigated Construction Off-Site

	ROG	NOx	CO	SO2	Fugitive PM10	Exhaust PM10	PM10 Total	Fugitive PM2.5	Exhaust PM2.5	PM2.5 Total	Bio- CO2	NBio- CO2	Total CO2	CH4	N2O	CO2e
Category	lb/day										lb/day					
Hauling	0.0000	0.0000	0.0000	0.0000	0.0000	0.0000	0.0000	0.0000	0.0000	0.0000						
Vendor	0.3860	3.0365	4.9630	8.2700e-003	0.2323	0.0440	0.2763	0.0663	0.0405	0.1067						
Worker	0.7956	0.9914	9.2707	0.0232	1.9469	0.0142	1.9611	0.5164	0.0131	0.5295						
Total	**1.1816**	**4.0279**	**14.2338**	**0.0314**	**2.1792**	**0.0581**	**2.2374**	**0.5827**	**0.0535**	**0.6362**						

3.6 Paving - 2017

Unmitigated Construction On-Site

	ROG	NOx	CO	SO2	Fugitive PM10	Exhaust PM10	PM10 Total	Fugitive PM2.5	Exhaust PM2.5	PM2.5 Total	Bio- CO2	NBio- CO2	Total CO2	CH4	N2O	CO2e
Category	lb/day										lb/day					
Off-Road	1.9074	20.2964	14.7270	0.0223		1.1384	1.1384		1.0473	1.0473						
Paving	0.0000					0.0000	0.0000		0.0000	0.0000						
Total	**1.9074**	**20.2964**	**14.7270**	**0.0223**		**1.1384**	**1.1384**		**1.0473**	**1.0473**						

3.6 Paving - 2017

Unmitigated Construction Off-Site

	ROG	NOx	CO	SO2	Fugitive PM10	Exhaust PM10	PM10 Total	Fugitive PM2.5	Exhaust PM2.5	PM2.5 Total	Bio- CO2	NBio- CO2	Total CO2	CH4	N2O	CO2e
Category	lb/day										lb/day					
Hauling	0.0000	0.0000	0.0000	0.0000	0.0000	0.0000	0.0000	0.0000	0.0000	0.0000						
Vendor	0.0000	0.0000	0.0000	0.0000	0.0000	0.0000	0.0000	0.0000	0.0000	0.0000						
Worker	0.0504	0.0628	0.5868	1.4700e-003	0.1232	9.0000e-004	0.1241	0.0327	8.3000e-004	0.0335						
Total	**0.0504**	**0.0628**	**0.5868**	**1.4700e-003**	**0.1232**	**9.0000e-004**	**0.1241**	**0.0327**	**8.3000e-004**	**0.0335**						

Mitigated Construction On-Site

	ROG	NOx	CO	SO2	Fugitive PM10	Exhaust PM10	PM10 Total	Fugitive PM2.5	Exhaust PM2.5	PM2.5 Total	Bio- CO2	NBio- CO2	Total CO2	CH4	N2O	CO2e
Category	lb/day										lb/day					
Off-Road	1.9074	20.2964	14.7270	0.0223		1.1384	1.1384		1.0473	1.0473						
Paving	0.0000					0.0000	0.0000		0.0000	0.0000						
Total	**1.9074**	**20.2964**	**14.7270**	**0.0223**		**1.1384**	**1.1384**		**1.0473**	**1.0473**						

3.6 Paving - 2017

Mitigated Construction Off-Site

	ROG	NOx	CO	SO2	Fugitive PM10	Exhaust PM10	PM10 Total	Fugitive PM2.5	Exhaust PM2.5	PM2.5 Total	Bio- CO2	NBio- CO2	Total CO2	CH4	N2O	CO2e
Category	lb/day										lb/day					
Hauling	0.0000	0.0000	0.0000	0.0000	0.0000	0.0000	0.0000	0.0000	0.0000	0.0000						
Vendor	0.0000	0.0000	0.0000	0.0000	0.0000	0.0000	0.0000	0.0000	0.0000	0.0000						
Worker	0.0504	0.0628	0.5868	1.4700e-003	0.1232	9.0000e-004	0.1241	0.0327	8.3000e-004	0.0335						
Total	**0.0504**	**0.0628**	**0.5868**	**1.4700e-003**	**0.1232**	**9.0000e-004**	**0.1241**	**0.0327**	**8.3000e-004**	**0.0335**						

3.7 Architectural Coating - 2017

Unmitigated Construction On-Site

	ROG	NOx	CO	SO2	Fugitive PM10	Exhaust PM10	PM10 Total	Fugitive PM2.5	Exhaust PM2.5	PM2.5 Total	Bio- CO2	NBio- CO2	Total CO2	CH4	N2O	CO2e
Category	lb/day										lb/day					
Archit. Coating	51.4659					0.0000	0.0000		0.0000	0.0000						
Off-Road	0.3323	2.1850	1.8681	2.9700e-003		0.1733	0.1733		0.1733	0.1733						
Total	**51.7982**	**2.1850**	**1.8681**	**2.9700e-003**		**0.1733**	**0.1733**		**0.1733**	**0.1733**						

3.7 Architectural Coating - 2017

Unmitigated Construction Off-Site

	ROG	NOx	CO	SO2	Fugitive PM10	Exhaust PM10	PM10 Total	Fugitive PM2.5	Exhaust PM2.5	PM2.5 Total	Bio- CO2	NBio- CO2	Total CO2	CH4	N2O	CO2e
Category	lb/day										lb/day					
Hauling	0.0000	0.0000	0.0000	0.0000	0.0000	0.0000	0.0000	0.0000	0.0000	0.0000						
Vendor	0.0000	0.0000	0.0000	0.0000	0.0000	0.0000	0.0000	0.0000	0.0000	0.0000						
Worker	0.1578	0.1966	1.8385	4.5900e-003	0.3861	2.8100e-003	0.3889	0.1024	2.5900e-003	0.1050						
Total	**0.1578**	**0.1966**	**1.8385**	**4.5900e-003**	**0.3861**	**2.8100e-003**	**0.3889**	**0.1024**	**2.5900e-003**	**0.1050**						

Mitigated Construction On-Site

	ROG	NOx	CO	SO2	Fugitive PM10	Exhaust PM10	PM10 Total	Fugitive PM2.5	Exhaust PM2.5	PM2.5 Total	Bio- CO2	NBio- CO2	Total CO2	CH4	N2O	CO2e
Category	lb/day										lb/day					
Archit. Coating	51.4659					0.0000	0.0000		0.0000	0.0000						
Off-Road	0.3323	2.1850	1.8681	2.9700e-003		0.1733	0.1733		0.1733	0.1733						
Total	**51.7982**	**2.1850**	**1.8681**	**2.9700e-003**		**0.1733**	**0.1733**		**0.1733**	**0.1733**						

3.7 Architectural Coating - 2017

Mitigated Construction Off-Site

	ROG	NOx	CO	SO2	Fugitive PM10	Exhaust PM10	PM10 Total	Fugitive PM2.5	Exhaust PM2.5	PM2.5 Total	Bio- CO2	NBio- CO2	Total CO2	CH4	N2O	CO2e
Category	lb/day										lb/day					
Hauling	0.0000	0.0000	0.0000	0.0000	0.0000	0.0000	0.0000	0.0000	0.0000	0.0000						
Vendor	0.0000	0.0000	0.0000	0.0000	0.0000	0.0000	0.0000	0.0000	0.0000	0.0000						
Worker	0.1578	0.1966	1.8385	4.5900e-003	0.3861	2.8100e-003	0.3889	0.1024	2.5900e-003	0.1050						
Total	**0.1578**	**0.1966**	**1.8385**	**4.5900e-003**	**0.3861**	**2.8100e-003**	**0.3889**	**0.1024**	**2.5900e-003**	**0.1050**						

4.0 Operational Detail - Mobile

4.1 Mitigation Measures Mobile

	ROG	NOx	CO	SO2	Fugitive PM10	Exhaust PM10	PM10 Total	Fugitive PM2.5	Exhaust PM2.5	PM2.5 Total	Bio- CO2	NBio- CO2	Total CO2	CH4	N2O	CO2e
Category	lb/day										lb/day					
Mitigated	11.2890	26.5945	118.2655	0.2001	14.2276	0.3745	14.6021	3.7977	0.3438	4.1415						
Unmitigated	11.2890	26.5945	118.2655	0.2001	14.2276	0.3745	14.6021	3.7977	0.3438	4.1415						

4.2 Trip Summary Information

	Average Daily Trip Rate			Unmitigated	Mitigated
Land Use	Weekday	Saturday	Sunday	Annual VMT	Annual VMT
Apartments High Rise	2,168.11	2,355.64	1997.03	6,197,322	6,197,322
Total	2,168.11	2,355.64	1,997.03	6,197,322	6,197,322

4.3 Trip Type Information

	Miles			Trip %			Trip Purpose %		
Land Use	H-W or C-W	H-S or C-C	H-O or C-NW	H-W or C-W	H-S or C-C	H-O or C-NW	Primary	Diverted	Pass-by
Apartments High Rise	10.80	7.30	7.50	41.60	18.80	39.60	86	11	3

LDA	LDT1	LDT2	MDV	LHD1	LHD2	MHD	HHD	OBUS	UBUS	MCY	SBUS	MH
0.509376	0.073655	0.192210	0.135105	0.037177	0.005354	0.012300	0.020284	0.001820	0.002092	0.006537	0.000620	0.003469

4.4 Fleet Mix

5.0 Energy Detail

Historical Energy Use: N

5.1 Mitigation Measures Energy

	ROG	NOx	CO	SO2	Fugitive PM10	Exhaust PM10	PM10 Total	Fugitive PM2.5	Exhaust PM2.5	PM2.5 Total	Bio- CO2	NBio- CO2	Total CO2	CH4	N2O	CO2e
Category	lb/day										lb/day					
NaturalGas Mitigated	0.0533	0.4554	0.1938	2.9100e-003		0.0368	0.0368		0.0368	0.0368						
NaturalGas Unmitigated	0.0533	0.4554	0.1938	2.9100e-003		0.0368	0.0368		0.0368	0.0368						

5.2 Energy by Land Use - NaturalGas

Unmitigated

	NaturalGas Use	ROG	NOx	CO	SO2	Fugitive PM10	Exhaust PM10	PM10 Total	Fugitive PM2.5	Exhaust PM2.5	PM2.5 Total	Bio- CO2	NBio- CO2	Total CO2	CH4	N2O	CO2e
Land Use	kBTU/yr	lb/day										lb/day					
Apartments High Rise	4941.73	0.0533	0.4554	0.1938	2.9100e-003		0.0368	0.0368		0.0368	0.0368						
Total		**0.0533**	**0.4554**	**0.1938**	**2.9100e-003**		**0.0368**	**0.0368**		**0.0368**	**0.0368**						

Mitigated

	NaturalGas Use	ROG	NOx	CO	SO2	Fugitive PM10	Exhaust PM10	PM10 Total	Fugitive PM2.5	Exhaust PM2.5	PM2.5 Total	Bio- CO2	NBio- CO2	Total CO2	CH4	N2O	CO2e
Land Use	kBTU/yr	lb/day										lb/day					
Apartments High Rise	4.94173	0.0533	0.4554	0.1938	2.9100e-003		0.0368	0.0368		0.0368	0.0368						
Total		**0.0533**	**0.4554**	**0.1938**	**2.9100e-003**		**0.0368**	**0.0368**		**0.0368**	**0.0368**						

6.0 Area Detail

6.1 Mitigation Measures Area

	ROG	NOx	CO	SO2	Fugitive PM10	Exhaust PM10	PM10 Total	Fugitive PM2.5	Exhaust PM2.5	PM2.5 Total	Bio- CO2	NBio- CO2	Total CO2	CH4	N2O	CO2e
Category	lb/day										lb/day					
Mitigated	514.2674	7.1607	648.0638	0.2437		87.2901	87.2901		87.2876	87.2876						
Unmitigated	514.2674	7.1607	648.0638	0.2437		87.2901	87.2901		87.2876	87.2876						

6.2 Area by SubCategory

Unmitigated

	ROG	NOx	CO	SO2	Fugitive PM10	Exhaust PM10	PM10 Total	Fugitive PM2.5	Exhaust PM2.5	PM2.5 Total	Bio- CO2	NBio- CO2	Total CO2	CH4	N2O	CO2e
SubCategory	lb/day										lb/day					
Architectural Coating	2.8201					0.0000	0.0000		0.0000	0.0000						
Consumer Products	7.0406					0.0000	0.0000		0.0000	0.0000						
Hearth	503.4999	6.8312	620.2579	0.2423		87.1425	87.1425		87.1399	87.1399						
Landscaping	0.9068	0.3296	27.8059	1.4300e-003		0.1477	0.1477		0.1477	0.1477						
Total	**514.2674**	**7.1607**	**648.0638**	**0.2437**		**87.2901**	**87.2901**		**87.2876**	**87.2876**						

6.2 Area by SubCategory

Mitigated

	ROG	NOx	CO	SO2	Fugitive PM10	Exhaust PM10	PM10 Total	Fugitive PM2.5	Exhaust PM2.5	PM2.5 Total	Bio- CO2	NBio- CO2	Total CO2	CH4	N2O	CO2e
SubCategory	lb/day										lb/day					
Consumer Products	7.0406					0.0000	0.0000		0.0000	0.0000						
Hearth	503.4999	6.8312	620.2579	0.2423		87.1425	87.1425		87.1399	87.1399						
Landscaping	0.9068	0.3296	27.8059	1.4300e-003		0.1477	0.1477		0.1477	0.1477						
Architectural Coating	2.8201					0.0000	0.0000		0.0000	0.0000						
Total	**514.2674**	**7.1607**	**648.0638**	**0.2437**		**87.2901**	**87.2901**		**87.2876**	**87.2876**						

7.0 Water Detail

7.1 Mitigation Measures Water

8.0 Waste Detail

8.1 Mitigation Measures Waste

9.0 Operational Offroad

Equipment Type	Number	Hours/Day	Days/Year	Horse Power	Load Factor	Fuel Type

10.0 Vegetation

USD 2020 Operations

San Diego County, Winter

1.0 Project Characteristics

1.1 Land Usage

Land Uses	Size	Metric	Lot Acreage	Floor Surface Area	Population
University/College (4Yr)	3,000.00	Student	12.66	551,392.41	0

1.2 Other Project Characteristics

Urbanization	Urban	**Wind Speed (m/s)**	2.6	**Precipitation Freq (Days)**	40
Climate Zone	13			**Operational Year**	2020
Utility Company	San Diego Gas & Electric				
CO2 Intensity (lb/MWhr)	720.49	**CH4 Intensity (lb/MWhr)**	0.029	**N2O Intensity (lb/MWhr)**	0.006

1.3 User Entered Comments & Non-Default Data

Project Characteristics -

Land Use -

Vehicle Trips - Trip rate based on TIA (LLG 2015)

Construction Off-road Equipment Mitigation -

Area Mitigation - Rule 67

Energy Mitigation -

Water Mitigation -

Waste Mitigation -

Table Name	Column Name	Default Value	New Value
tblAreaMitigation	UseLowVOCPaintNonresidentialExteriorValue	250	50
tblAreaMitigation	UseLowVOCPaintNonresidentialInteriorValue	250	50
tblProjectCharacteristics	OperationalYear	2014	2020
tblVehicleTrips	WD_TR	2.38	3.10

2.0 Emissions Summary

2.1 Overall Construction (Maximum Daily Emission)

Unmitigated Construction

	ROG	NOx	CO	SO2	Fugitive PM10	Exhaust PM10	PM10 Total	Fugitive PM2.5	Exhaust PM2.5	PM2.5 Total	Bio- CO2	NBio- CO2	Total CO2	CH4	N2O	CO2e
Year	lb/day										lb/day					
2016	6.5536	74.9058	50.0067	0.0708	18.2141	3.5855	21.1539	9.9699	3.2986	12.6745	0.0000	6,692.4770	6,692.4770	1.9437	0.0000	6,733.2945
2017	639.4128	35.1843	39.9664	0.0707	2.5032	1.9082	4.4114	0.6760	1.7898	2.4657	0.0000	6,553.8138	6,553.8138	0.7592	0.0000	6,569.7574
Total	**645.9664**	**110.0901**	**89.9730**	**0.1415**	**20.7173**	**5.4936**	**25.5653**	**10.6459**	**5.0884**	**15.1402**	**0.0000**	**13,246.2908**	**13,246.2908**	**2.7029**	**0.0000**	**13,303.0518**

Mitigated Construction

	ROG	NOx	CO	SO2	Fugitive PM10	Exhaust PM10	PM10 Total	Fugitive PM2.5	Exhaust PM2.5	PM2.5 Total	Bio- CO2	NBio- CO2	Total CO2	CH4	N2O	CO2e
Year	lb/day										lb/day					
2016	6.5536	74.9058	50.0067	0.0708	18.2141	3.5855	21.1539	9.9699	3.2986	12.6745	0.0000	6,692.4770	6,692.4770	1.9437	0.0000	6,733.2944
2017	639.4128	35.1843	39.9664	0.0707	2.5032	1.9082	4.4114	0.6760	1.7898	2.4657	0.0000	6,553.8138	6,553.8138	0.7592	0.0000	6,569.7574
Total	**645.9664**	**110.0901**	**89.9730**	**0.1415**	**20.7173**	**5.4936**	**25.5653**	**10.6459**	**5.0884**	**15.1402**	**0.0000**	**13,246.2908**	**13,246.2908**	**2.7029**	**0.0000**	**13,303.0518**

	ROG	**NOx**	**CO**	**SO2**	**Fugitive PM10**	**Exhaust PM10**	**PM10 Total**	**Fugitive PM2.5**	**Exhaust PM2.5**	**PM2.5 Total**	**Bio- CO2**	**NBio-CO2**	**Total CO2**	**CH4**	**N20**	**CO2e**
Percent Reduction	**0.00**	**0.00**	**0.00**	**0.00**	**0.00**	**0.00**	**0.00**	**0.00**	**0.00**	**0.00**	**0.00**	**0.00**	**0.00**	**0.00**	**0.00**	**0.00**

2.2 Overall Operational

Unmitigated Operational

	ROG	NOx	CO	SO2	Fugitive PM10	Exhaust PM10	PM10 Total	Fugitive PM2.5	Exhaust PM2.5	PM2.5 Total	Bio- CO2	NBio- CO2	Total CO2	CH4	N2O	CO2e
Category	lb/day										lb/day					
Area	15.3298	2.8500e-003	0.3083	2.0000e-005		1.1100e-003	1.1100e-003		1.1100e-003	1.1100e-003		0.6566	0.6566	1.7600e-003		0.6935
Energy	0.6186	5.6235	4.7238	0.0337		0.4274	0.4274		0.4274	0.4274		6,748.2256	6,748.2256	0.1293	0.1237	6,789.2941
Mobile	28.5300	55.9589	273.6373	0.7024	49.6970	0.8191	50.5161	13.2658	0.7558	14.0216		53,743.9192	53,743.9192	2.1110		53,788.2504
Total	**44.4783**	**61.5853**	**278.6693**	**0.7361**	**49.6970**	**1.2476**	**50.9446**	**13.2658**	**1.1843**	**14.4501**		**60,492.8013**	**60,492.8013**	**2.2421**	**0.1237**	**60,578.2381**

Mitigated Operational

	ROG	NOx	CO	SO2	Fugitive PM10	Exhaust PM10	PM10 Total	Fugitive PM2.5	Exhaust PM2.5	PM2.5 Total	Bio- CO2	NBio- CO2	Total CO2	CH4	N2O	CO2e
Category	lb/day										lb/day					
Area	12.5290	2.8500e-003	0.3083	2.0000e-005		1.1100e-003	1.1100e-003		1.1100e-003	1.1100e-003		0.6566	0.6566	1.7600e-003		0.6935
Energy	0.4582	4.1657	3.4992	0.0250		0.3166	0.3166		0.3166	0.3166		4,998.8765	4,998.8765	0.0958	0.0917	5,029.2988
Mobile	28.5300	55.9589	273.6373	0.7024	49.6970	0.8191	50.5161	13.2658	0.7558	14.0216		53,743.9192	53,743.9192	2.1110		53,788.2504
Total	**41.5172**	**60.1275**	**277.4448**	**0.7274**	**49.6970**	**1.1368**	**50.8338**	**13.2658**	**1.0735**	**14.3393**		**58,743.4522**	**58,743.4522**	**2.2086**	**0.0917**	**58,818.2427**

	ROG	NOx	CO	SO2	Fugitive PM10	Exhaust PM10	PM10 Total	Fugitive PM2.5	Exhaust PM2.5	PM2.5 Total	Bio- CO2	NBio-CO2	Total CO2	CH4	N20	CO2e
Percent Reduction	**6.66**	**2.37**	**0.44**	**1.19**	**0.00**	**8.88**	**0.22**	**0.00**	**9.35**	**0.77**	**0.00**	**2.89**	**2.89**	**1.50**	**25.92**	**2.91**

3.0 Construction Detail

Construction Phase

Phase Number	Phase Name	Phase Type	Start Date	End Date	Num Days Week	Num Days	Phase Description
1	Demolition	Demolition	1/1/2016	1/28/2016	5	20	
2	Site Preparation	Site Preparation	1/29/2016	2/11/2016	5	10	
3	Grading	Grading	2/12/2016	3/24/2016	5	30	
4	Building Construction	Building Construction	3/25/2016	5/18/2017	5	300	
5	Paving	Paving	5/19/2017	6/15/2017	5	20	
6	Architectural Coating	Architectural Coating	6/16/2017	7/13/2017	5	20	

Acres of Grading (Site Preparation Phase): 0

Acres of Grading (Grading Phase): 75

Acres of Paving: 0

Residential Indoor: 0; Residential Outdoor: 0; Non-Residential Indoor: 827,089; Non-Residential Outdoor: 275,696 (Architectural Coating – sqft)

OffRoad Equipment

Phase Name	Offroad Equipment Type	Amount	Usage Hours	Horse Power	Load Factor
Architectural Coating	Air Compressors	1	6.00	78	0.48
Demolition	Excavators	3	8.00	162	0.38
Demolition	Concrete/Industrial Saws	1	8.00	81	0.73
Grading	Excavators	2	8.00	162	0.38
Building Construction	Cranes	1	7.00	226	0.29
Building Construction	Forklifts	3	8.00	89	0.20
Building Construction	Generator Sets	1	8.00	84	0.74
Paving	Pavers	2	8.00	125	0.42
Paving	Rollers	2	8.00	80	0.38
Demolition	Rubber Tired Dozers	2	8.00	255	0.40
Grading	Rubber Tired Dozers	1	8.00	255	0.40
Building Construction	Tractors/Loaders/Backhoes	3	7.00	97	0.37
Grading	Graders	1	8.00	174	0.41
Grading	Tractors/Loaders/Backhoes	2	8.00	97	0.37
Paving	Paving Equipment	2	8.00	130	0.36
Site Preparation	Tractors/Loaders/Backhoes	4	8.00	97	0.37
Site Preparation	Rubber Tired Dozers	3	8.00	255	0.40
Grading	Scrapers	2	8.00	361	0.48
Building Construction	Welders	1	8.00	46	0.45

Trips and VMT

Phase Name	Offroad Equipment Count	Worker Trip Number	Vendor Trip Number	Hauling Trip Number	Worker Trip Length	Vendor Trip Length	Hauling Trip Length	Worker Vehicle Class	Vendor Vehicle Class	Hauling Vehicle Class
Demolition	6	15.00	0.00	0.00	10.80	7.30	20.00	LD_Mix	HDT_Mix	HHDT
Site Preparation	7	18.00	0.00	0.00	10.80	7.30	20.00	LD_Mix	HDT_Mix	HHDT
Grading	8	20.00	0.00	0.00	10.80	7.30	20.00	LD_Mix	HDT_Mix	HHDT
Building Construction	9	232.00	90.00	0.00	10.80	7.30	20.00	LD_Mix	HDT_Mix	HHDT
Paving	6	15.00	0.00	0.00	10.80	7.30	20.00	LD_Mix	HDT_Mix	HHDT
Architectural Coating	1	46.00	0.00	0.00	10.80	7.30	20.00	LD_Mix	HDT_Mix	HHDT

3.1 Mitigation Measures Construction

Clean Paved Roads

3.2 Demolition - 2016

Unmitigated Construction On-Site

	ROG	NOx	CO	SO2	Fugitive PM10	Exhaust PM10	PM10 Total	Fugitive PM2.5	Exhaust PM2.5	PM2.5 Total	Bio- CO2	NBio- CO2	Total CO2	CH4	N2O	CO2e
Category	lb/day										lb/day					
Off-Road	4.2876	45.6559	35.0303	0.0399		2.2921	2.2921		2.1365	2.1365		4,089.2841	4,089.2841	1.1121		4,112.6374
Total	**4.2876**	**45.6559**	**35.0303**	**0.0399**		**2.2921**	**2.2921**		**2.1365**	**2.1365**		**4,089.2841**	**4,089.2841**	**1.1121**		**4,112.6374**

3.2 Demolition - 2016

Unmitigated Construction Off-Site

	ROG	NOx	CO	SO2	Fugitive PM10	Exhaust PM10	PM10 Total	Fugitive PM2.5	Exhaust PM2.5	PM2.5 Total	Bio- CO2	NBio- CO2	Total CO2	CH4	N2O	CO2e
Category	lb/day										lb/day					
Hauling	0.0000	0.0000	0.0000	0.0000	0.0000	0.0000	0.0000	0.0000	0.0000	0.0000		0.0000	0.0000	0.0000		0.0000
Vendor	0.0000	0.0000	0.0000	0.0000	0.0000	0.0000	0.0000	0.0000	0.0000	0.0000		0.0000	0.0000	0.0000		0.0000
Worker	0.0556	0.0690	0.6519	1.4700e-003	0.1232	9.2000e-004	0.1242	0.0327	8.5000e-004	0.0335		122.3507	122.3507	6.5300e-003		122.4878
Total	**0.0556**	**0.0690**	**0.6519**	**1.4700e-003**	**0.1232**	**9.2000e-004**	**0.1242**	**0.0327**	**8.5000e-004**	**0.0335**		**122.3507**	**122.3507**	**6.5300e-003**		**122.4878**

Mitigated Construction On-Site

	ROG	NOx	CO	SO2	Fugitive PM10	Exhaust PM10	PM10 Total	Fugitive PM2.5	Exhaust PM2.5	PM2.5 Total	Bio- CO2	NBio- CO2	Total CO2	CH4	N2O	CO2e
Category	lb/day										lb/day					
Off-Road	4.2876	45.6559	35.0303	0.0399		2.2921	2.2921		2.1365	2.1365	0.0000	4,089.2841	4,089.2841	1.1121		4,112.6374
Total	**4.2876**	**45.6559**	**35.0303**	**0.0399**		**2.2921**	**2.2921**		**2.1365**	**2.1365**	**0.0000**	**4,089.2841**	**4,089.2841**	**1.1121**		**4,112.6374**

3.2 Demolition - 2016

Mitigated Construction Off-Site

	ROG	NOx	CO	SO2	Fugitive PM10	Exhaust PM10	PM10 Total	Fugitive PM2.5	Exhaust PM2.5	PM2.5 Total	Bio- CO2	NBio- CO2	Total CO2	CH4	N2O	CO2e
Category	lb/day										lb/day					
Hauling	0.0000	0.0000	0.0000	0.0000	0.0000	0.0000	0.0000	0.0000	0.0000	0.0000		0.0000	0.0000	0.0000		0.0000
Vendor	0.0000	0.0000	0.0000	0.0000	0.0000	0.0000	0.0000	0.0000	0.0000	0.0000		0.0000	0.0000	0.0000		0.0000
Worker	0.0556	0.0690	0.6519	1.4700e-003	0.1232	9.2000e-004	0.1242	0.0327	8.5000e-004	0.0335		122.3507	122.3507	6.5300e-003		122.4878
Total	**0.0556**	**0.0690**	**0.6519**	**1.4700e-003**	**0.1232**	**9.2000e-004**	**0.1242**	**0.0327**	**8.5000e-004**	**0.0335**		**122.3507**	**122.3507**	**6.5300e-003**		**122.4878**

3.3 Site Preparation - 2016

Unmitigated Construction On-Site

	ROG	NOx	CO	SO2	Fugitive PM10	Exhaust PM10	PM10 Total	Fugitive PM2.5	Exhaust PM2.5	PM2.5 Total	Bio- CO2	NBio- CO2	Total CO2	CH4	N2O	CO2e
Category	lb/day										lb/day					
Fugitive Dust					18.0663	0.0000	18.0663	9.9307	0.0000	9.9307			0.0000			0.0000
Off-Road	5.0771	54.6323	41.1053	0.0391		2.9387	2.9387		2.7036	2.7036		4,065.0053	4,065.0053	1.2262		4,090.7544
Total	**5.0771**	**54.6323**	**41.1053**	**0.0391**	**18.0663**	**2.9387**	**21.0049**	**9.9307**	**2.7036**	**12.6343**		**4,065.0053**	**4,065.0053**	**1.2262**		**4,090.7544**

3.3 Site Preparation - 2016

Unmitigated Construction Off-Site

	ROG	NOx	CO	SO2	Fugitive PM10	Exhaust PM10	PM10 Total	Fugitive PM2.5	Exhaust PM2.5	PM2.5 Total	Bio- CO2	NBio- CO2	Total CO2	CH4	N2O	CO2e
Category	lb/day										lb/day					
Hauling	0.0000	0.0000	0.0000	0.0000	0.0000	0.0000	0.0000	0.0000	0.0000	0.0000		0.0000	0.0000	0.0000		0.0000
Vendor	0.0000	0.0000	0.0000	0.0000	0.0000	0.0000	0.0000	0.0000	0.0000	0.0000		0.0000	0.0000	0.0000		0.0000
Worker	0.0667	0.0829	0.7823	1.7600e-003	0.1479	1.1100e-003	0.1490	0.0392	1.0200e-003	0.0402		146.8209	146.8209	7.8300e-003		146.9854
Total	**0.0667**	**0.0829**	**0.7823**	**1.7600e-003**	**0.1479**	**1.1100e-003**	**0.1490**	**0.0392**	**1.0200e-003**	**0.0402**		**146.8209**	**146.8209**	**7.8300e-003**		**146.9854**

Mitigated Construction On-Site

	ROG	NOx	CO	SO2	Fugitive PM10	Exhaust PM10	PM10 Total	Fugitive PM2.5	Exhaust PM2.5	PM2.5 Total	Bio- CO2	NBio- CO2	Total CO2	CH4	N2O	CO2e
Category	lb/day										lb/day					
Fugitive Dust					18.0663	0.0000	18.0663	9.9307	0.0000	9.9307			0.0000			0.0000
Off-Road	5.0771	54.6323	41.1053	0.0391		2.9387	2.9387		2.7036	2.7036	0.0000	4,065.0053	4,065.0053	1.2262		4,090.7544
Total	**5.0771**	**54.6323**	**41.1053**	**0.0391**	**18.0663**	**2.9387**	**21.0049**	**9.9307**	**2.7036**	**12.6343**	**0.0000**	**4,065.0053**	**4,065.0053**	**1.2262**		**4,090.7544**

3.3 Site Preparation - 2016

Mitigated Construction Off-Site

	ROG	NOx	CO	SO2	Fugitive PM10	Exhaust PM10	PM10 Total	Fugitive PM2.5	Exhaust PM2.5	PM2.5 Total	Bio- CO2	NBio- CO2	Total CO2	CH4	N2O	CO2e
Category	lb/day										lb/day					
Hauling	0.0000	0.0000	0.0000	0.0000	0.0000	0.0000	0.0000	0.0000	0.0000	0.0000		0.0000	0.0000	0.0000		0.0000
Vendor	0.0000	0.0000	0.0000	0.0000	0.0000	0.0000	0.0000	0.0000	0.0000	0.0000		0.0000	0.0000	0.0000		0.0000
Worker	0.0667	0.0829	0.7823	1.7600e-003	0.1479	1.1100e-003	0.1490	0.0392	1.0200e-003	0.0402		146.8209	146.8209	7.8300e-003		146.9854
Total	**0.0667**	**0.0829**	**0.7823**	**1.7600e-003**	**0.1479**	**1.1100e-003**	**0.1490**	**0.0392**	**1.0200e-003**	**0.0402**		**146.8209**	**146.8209**	**7.8300e-003**		**146.9854**

3.4 Grading - 2016

Unmitigated Construction On-Site

	ROG	NOx	CO	SO2	Fugitive PM10	Exhaust PM10	PM10 Total	Fugitive PM2.5	Exhaust PM2.5	PM2.5 Total	Bio- CO2	NBio- CO2	Total CO2	CH4	N2O	CO2e
Category	lb/day										lb/day					
Fugitive Dust					8.6733	0.0000	8.6733	3.5965	0.0000	3.5965			0.0000			0.0000
Off-Road	6.4795	74.8137	49.1374	0.0617		3.5842	3.5842		3.2975	3.2975		6,414.9807	6,414.9807	1.9350		6,455.6154
Total	**6.4795**	**74.8137**	**49.1374**	**0.0617**	**8.6733**	**3.5842**	**12.2576**	**3.5965**	**3.2975**	**6.8940**		**6,414.9807**	**6,414.9807**	**1.9350**		**6,455.6154**

3.4 Grading - 2016

Unmitigated Construction Off-Site

	ROG	NOx	CO	SO2	Fugitive PM10	Exhaust PM10	PM10 Total	Fugitive PM2.5	Exhaust PM2.5	PM2.5 Total	Bio- CO2	NBio- CO2	Total CO2	CH4	N2O	CO2e
Category	lb/day										lb/day					
Hauling	0.0000	0.0000	0.0000	0.0000	0.0000	0.0000	0.0000	0.0000	0.0000	0.0000		0.0000	0.0000	0.0000		0.0000
Vendor	0.0000	0.0000	0.0000	0.0000	0.0000	0.0000	0.0000	0.0000	0.0000	0.0000		0.0000	0.0000	0.0000		0.0000
Worker	0.0741	0.0921	0.8693	1.9500e-003	0.1643	1.2300e-003	0.1655	0.0436	1.1300e-003	0.0447		163.1343	163.1343	8.7000e-003		163.3171
Total	**0.0741**	**0.0921**	**0.8693**	**1.9500e-003**	**0.1643**	**1.2300e-003**	**0.1655**	**0.0436**	**1.1300e-003**	**0.0447**		**163.1343**	**163.1343**	**8.7000e-003**		**163.3171**

Mitigated Construction On-Site

	ROG	NOx	CO	SO2	Fugitive PM10	Exhaust PM10	PM10 Total	Fugitive PM2.5	Exhaust PM2.5	PM2.5 Total	Bio- CO2	NBio- CO2	Total CO2	CH4	N2O	CO2e
Category	lb/day										lb/day					
Fugitive Dust					8.6733	0.0000	8.6733	3.5965	0.0000	3.5965			0.0000			0.0000
Off-Road	6.4795	74.8137	49.1374	0.0617		3.5842	3.5842		3.2975	3.2975	0.0000	6,414.9807	6,414.9807	1.9350		6,455.6154
Total	**6.4795**	**74.8137**	**49.1374**	**0.0617**	**8.6733**	**3.5842**	**12.2576**	**3.5965**	**3.2975**	**6.8940**	**0.0000**	**6,414.9807**	**6,414.9807**	**1.9350**		**6,455.6154**

3.4 Grading - 2016

Mitigated Construction Off-Site

	ROG	NOx	CO	SO2	Fugitive PM10	Exhaust PM10	PM10 Total	Fugitive PM2.5	Exhaust PM2.5	PM2.5 Total	Bio- CO2	NBio- CO2	Total CO2	CH4	N2O	CO2e
Category	lb/day										lb/day					
Hauling	0.0000	0.0000	0.0000	0.0000	0.0000	0.0000	0.0000	0.0000	0.0000	0.0000		0.0000	0.0000	0.0000		0.0000
Vendor	0.0000	0.0000	0.0000	0.0000	0.0000	0.0000	0.0000	0.0000	0.0000	0.0000		0.0000	0.0000	0.0000		0.0000
Worker	0.0741	0.0921	0.8693	1.9500e-003	0.1643	1.2300e-003	0.1655	0.0436	1.1300e-003	0.0447		163.1343	163.1343	8.7000e-003		163.3171
Total	**0.0741**	**0.0921**	**0.8693**	**1.9500e-003**	**0.1643**	**1.2300e-003**	**0.1655**	**0.0436**	**1.1300e-003**	**0.0447**		**163.1343**	**163.1343**	**8.7000e-003**		**163.3171**

3.5 Building Construction - 2016

Unmitigated Construction On-Site

	ROG	NOx	CO	SO2	Fugitive PM10	Exhaust PM10	PM10 Total	Fugitive PM2.5	Exhaust PM2.5	PM2.5 Total	Bio- CO2	NBio- CO2	Total CO2	CH4	N2O	CO2e
Category	lb/day										lb/day					
Off-Road	3.4062	28.5063	18.5066	0.0268		1.9674	1.9674		1.8485	1.8485		2,669.2864	2,669.2864	0.6620		2,683.1890
Total	**3.4062**	**28.5063**	**18.5066**	**0.0268**		**1.9674**	**1.9674**		**1.8485**	**1.8485**		**2,669.2864**	**2,669.2864**	**0.6620**		**2,683.1890**

3.5 Building Construction - 2016

Unmitigated Construction Off-Site

	ROG	NOx	CO	SO2	Fugitive PM10	Exhaust PM10	PM10 Total	Fugitive PM2.5	Exhaust PM2.5	PM2.5 Total	Bio- CO2	NBio- CO2	Total CO2	CH4	N2O	CO2e
Category	lb/day										lb/day					
Hauling	0.0000	0.0000	0.0000	0.0000	0.0000	0.0000	0.0000	0.0000	0.0000	0.0000		0.0000	0.0000	0.0000		0.0000
Vendor	1.0861	8.7362	13.4740	0.0213	0.5974	0.1303	0.7277	0.1704	0.1199	0.2903		2,130.8329	2,130.8329	0.0170		2,131.1902
Worker	0.8597	1.0679	10.0833	0.0227	1.9058	0.0143	1.9201	0.5055	0.0131	0.5187		1,892.3577	1,892.3577	0.1010		1,894.4778
Total	**1.9458**	**9.8041**	**23.5573**	**0.0440**	**2.5032**	**0.1446**	**2.6478**	**0.6759**	**0.1330**	**0.8089**		**4,023.1906**	**4,023.1906**	**0.1180**		**4,025.6680**

Mitigated Construction On-Site

	ROG	NOx	CO	SO2	Fugitive PM10	Exhaust PM10	PM10 Total	Fugitive PM2.5	Exhaust PM2.5	PM2.5 Total	Bio- CO2	NBio- CO2	Total CO2	CH4	N2O	CO2e
Category	lb/day										lb/day					
Off-Road	3.4062	28.5063	18.5066	0.0268		1.9674	1.9674		1.8485	1.8485	0.0000	2,669.2864	2,669.2864	0.6620		2,683.1890
Total	**3.4062**	**28.5063**	**18.5066**	**0.0268**		**1.9674**	**1.9674**		**1.8485**	**1.8485**	**0.0000**	**2,669.2864**	**2,669.2864**	**0.6620**		**2,683.1890**

3.5 Building Construction - 2016

Mitigated Construction Off-Site

	ROG	NOx	CO	SO2	Fugitive PM10	Exhaust PM10	PM10 Total	Fugitive PM2.5	Exhaust PM2.5	PM2.5 Total	Bio- CO2	NBio- CO2	Total CO2	CH4	N2O	CO2e
Category	lb/day										lb/day					
Hauling	0.0000	0.0000	0.0000	0.0000	0.0000	0.0000	0.0000	0.0000	0.0000	0.0000		0.0000	0.0000	0.0000		0.0000
Vendor	1.0861	8.7362	13.4740	0.0213	0.5974	0.1303	0.7277	0.1704	0.1199	0.2903		2,130.8329	2,130.8329	0.0170		2,131.1902
Worker	0.8597	1.0679	10.0833	0.0227	1.9058	0.0143	1.9201	0.5055	0.0131	0.5187		1,892.3577	1,892.3577	0.1010		1,894.4778
Total	**1.9458**	**9.8041**	**23.5573**	**0.0440**	**2.5032**	**0.1446**	**2.6478**	**0.6759**	**0.1330**	**0.8089**		**4,023.1906**	**4,023.1906**	**0.1180**		**4,025.6680**

3.5 Building Construction - 2017

Unmitigated Construction On-Site

	ROG	NOx	CO	SO2	Fugitive PM10	Exhaust PM10	PM10 Total	Fugitive PM2.5	Exhaust PM2.5	PM2.5 Total	Bio- CO2	NBio- CO2	Total CO2	CH4	N2O	CO2e
Category	lb/day										lb/day					
Off-Road	3.1024	26.4057	18.1291	0.0268		1.7812	1.7812		1.6730	1.6730		2,639.8053	2,639.8053	0.6497		2,653.4490
Total	**3.1024**	**26.4057**	**18.1291**	**0.0268**		**1.7812**	**1.7812**		**1.6730**	**1.6730**		**2,639.8053**	**2,639.8053**	**0.6497**		**2,653.4490**

3.5 Building Construction - 2017

Unmitigated Construction Off-Site

	ROG	NOx	CO	SO2	Fugitive PM10	Exhaust PM10	PM10 Total	Fugitive PM2.5	Exhaust PM2.5	PM2.5 Total	Bio- CO2	NBio- CO2	Total CO2	CH4	N2O	CO2e
Category	lb/day										lb/day					
Hauling	0.0000	0.0000	0.0000	0.0000	0.0000	0.0000	0.0000	0.0000	0.0000	0.0000		0.0000	0.0000	0.0000		0.0000
Vendor	0.9924	7.8082	12.7621	0.0213	0.5974	0.1131	0.7105	0.1704	0.1040	0.2745		2,094.7848	2,094.7848	0.0161		2,095.1231
Worker	0.7788	0.9705	9.0752	0.0227	1.9058	0.0139	1.9197	0.5055	0.0128	0.5183		1,819.2237	1,819.2237	0.0934		1,821.1853
Total	**1.7713**	**8.7786**	**21.8372**	**0.0439**	**2.5032**	**0.1270**	**2.6302**	**0.6760**	**0.1168**	**0.7928**		**3,914.0085**	**3,914.0085**	**0.1095**		**3,916.3083**

Mitigated Construction On-Site

	ROG	NOx	CO	SO2	Fugitive PM10	Exhaust PM10	PM10 Total	Fugitive PM2.5	Exhaust PM2.5	PM2.5 Total	Bio- CO2	NBio- CO2	Total CO2	CH4	N2O	CO2e
Category	lb/day										lb/day					
Off-Road	3.1024	26.4057	18.1291	0.0268		1.7812	1.7812		1.6730	1.6730	0.0000	2,639.8053	2,639.8053	0.6497		2,653.4490
Total	**3.1024**	**26.4057**	**18.1291**	**0.0268**		**1.7812**	**1.7812**		**1.6730**	**1.6730**	**0.0000**	**2,639.8053**	**2,639.8053**	**0.6497**		**2,653.4490**

3.5 Building Construction - 2017

Mitigated Construction Off-Site

	ROG	NOx	CO	SO2	Fugitive PM10	Exhaust PM10	PM10 Total	Fugitive PM2.5	Exhaust PM2.5	PM2.5 Total	Bio- CO2	NBio- CO2	Total CO2	CH4	N2O	CO2e
Category	lb/day										lb/day					
Hauling	0.0000	0.0000	0.0000	0.0000	0.0000	0.0000	0.0000	0.0000	0.0000	0.0000		0.0000	0.0000	0.0000		0.0000
Vendor	0.9924	7.8082	12.7621	0.0213	0.5974	0.1131	0.7105	0.1704	0.1040	0.2745		2,094.7848	2,094.7848	0.0161		2,095.1231
Worker	0.7788	0.9705	9.0752	0.0227	1.9058	0.0139	1.9197	0.5055	0.0128	0.5183		1,819.2237	1,819.2237	0.0934		1,821.1853
Total	**1.7713**	**8.7786**	**21.8372**	**0.0439**	**2.5032**	**0.1270**	**2.6302**	**0.6760**	**0.1168**	**0.7928**		**3,914.0085**	**3,914.0085**	**0.1095**		**3,916.3083**

3.6 Paving - 2017

Unmitigated Construction On-Site

	ROG	NOx	CO	SO2	Fugitive PM10	Exhaust PM10	PM10 Total	Fugitive PM2.5	Exhaust PM2.5	PM2.5 Total	Bio- CO2	NBio- CO2	Total CO2	CH4	N2O	CO2e
Category	lb/day										lb/day					
Off-Road	1.9074	20.2964	14.7270	0.0223		1.1384	1.1384		1.0473	1.0473		2,281.0588	2,281.0588	0.6989		2,295.7360
Paving	0.0000					0.0000	0.0000		0.0000	0.0000			0.0000			0.0000
Total	**1.9074**	**20.2964**	**14.7270**	**0.0223**		**1.1384**	**1.1384**		**1.0473**	**1.0473**		**2,281.0588**	**2,281.0588**	**0.6989**		**2,295.7360**

3.6 Paving - 2017

Unmitigated Construction Off-Site

	ROG	NOx	CO	SO2	Fugitive PM10	Exhaust PM10	PM10 Total	Fugitive PM2.5	Exhaust PM2.5	PM2.5 Total	Bio- CO2	NBio- CO2	Total CO2	CH4	N2O	CO2e
Category	lb/day										lb/day					
Hauling	0.0000	0.0000	0.0000	0.0000	0.0000	0.0000	0.0000	0.0000	0.0000	0.0000		0.0000	0.0000	0.0000		0.0000
Vendor	0.0000	0.0000	0.0000	0.0000	0.0000	0.0000	0.0000	0.0000	0.0000	0.0000		0.0000	0.0000	0.0000		0.0000
Worker	0.0504	0.0628	0.5868	1.4700e-003	0.1232	9.0000e-004	0.1241	0.0327	8.3000e-004	0.0335		117.6222	117.6222	6.0400e-003		117.7491
Total	**0.0504**	**0.0628**	**0.5868**	**1.4700e-003**	**0.1232**	**9.0000e-004**	**0.1241**	**0.0327**	**8.3000e-004**	**0.0335**		**117.6222**	**117.6222**	**6.0400e-003**		**117.7491**

Mitigated Construction On-Site

	ROG	NOx	CO	SO2	Fugitive PM10	Exhaust PM10	PM10 Total	Fugitive PM2.5	Exhaust PM2.5	PM2.5 Total	Bio- CO2	NBio- CO2	Total CO2	CH4	N2O	CO2e
Category	lb/day										lb/day					
Off-Road	1.9074	20.2964	14.7270	0.0223		1.1384	1.1384		1.0473	1.0473	0.0000	2,281.0588	2,281.0588	0.6989		2,295.7360
Paving	0.0000					0.0000	0.0000		0.0000	0.0000			0.0000			0.0000
Total	**1.9074**	**20.2964**	**14.7270**	**0.0223**		**1.1384**	**1.1384**		**1.0473**	**1.0473**	**0.0000**	**2,281.0588**	**2,281.0588**	**0.6989**		**2,295.7360**

3.6 Paving - 2017

Mitigated Construction Off-Site

	ROG	NOx	CO	SO2	Fugitive PM10	Exhaust PM10	PM10 Total	Fugitive PM2.5	Exhaust PM2.5	PM2.5 Total	Bio- CO2	NBio- CO2	Total CO2	CH4	N2O	CO2e
Category	lb/day										lb/day					
Hauling	0.0000	0.0000	0.0000	0.0000	0.0000	0.0000	0.0000	0.0000	0.0000	0.0000		0.0000	0.0000	0.0000		0.0000
Vendor	0.0000	0.0000	0.0000	0.0000	0.0000	0.0000	0.0000	0.0000	0.0000	0.0000		0.0000	0.0000	0.0000		0.0000
Worker	0.0504	0.0628	0.5868	1.4700e-003	0.1232	9.0000e-004	0.1241	0.0327	8.3000e-004	0.0335		117.6222	117.6222	6.0400e-003		117.7491
Total	**0.0504**	**0.0628**	**0.5868**	**1.4700e-003**	**0.1232**	**9.0000e-004**	**0.1241**	**0.0327**	**8.3000e-004**	**0.0335**		**117.6222**	**117.6222**	**6.0400e-003**		**117.7491**

3.7 Architectural Coating - 2017

Unmitigated Construction On-Site

	ROG	NOx	CO	SO2	Fugitive PM10	Exhaust PM10	PM10 Total	Fugitive PM2.5	Exhaust PM2.5	PM2.5 Total	Bio- CO2	NBio- CO2	Total CO2	CH4	N2O	CO2e
Category	lb/day										lb/day					
Archit. Coating	638.9261					0.0000	0.0000		0.0000	0.0000			0.0000			0.0000
Off-Road	0.3323	2.1850	1.8681	2.9700e-003		0.1733	0.1733		0.1733	0.1733		281.4481	281.4481	0.0297		282.0721
Total	**639.2584**	**2.1850**	**1.8681**	**2.9700e-003**		**0.1733**	**0.1733**		**0.1733**	**0.1733**		**281.4481**	**281.4481**	**0.0297**		**282.0721**

3.7 Architectural Coating - 2017

Unmitigated Construction Off-Site

	ROG	NOx	CO	SO2	Fugitive PM10	Exhaust PM10	PM10 Total	Fugitive PM2.5	Exhaust PM2.5	PM2.5 Total	Bio- CO2	NBio- CO2	Total CO2	CH4	N2O	CO2e
Category	lb/day										lb/day					
Hauling	0.0000	0.0000	0.0000	0.0000	0.0000	0.0000	0.0000	0.0000	0.0000	0.0000		0.0000	0.0000	0.0000		0.0000
Vendor	0.0000	0.0000	0.0000	0.0000	0.0000	0.0000	0.0000	0.0000	0.0000	0.0000		0.0000	0.0000	0.0000		0.0000
Worker	0.1544	0.1924	1.7994	4.4900e-003	0.3779	2.7500e-003	0.3806	0.1002	2.5300e-003	0.1028		360.7082	360.7082	0.0185		361.0971
Total	**0.1544**	**0.1924**	**1.7994**	**4.4900e-003**	**0.3779**	**2.7500e-003**	**0.3806**	**0.1002**	**2.5300e-003**	**0.1028**		**360.7082**	**360.7082**	**0.0185**		**361.0971**

Mitigated Construction On-Site

	ROG	NOx	CO	SO2	Fugitive PM10	Exhaust PM10	PM10 Total	Fugitive PM2.5	Exhaust PM2.5	PM2.5 Total	Bio- CO2	NBio- CO2	Total CO2	CH4	N2O	CO2e
Category	lb/day										lb/day					
Archit. Coating	638.9261					0.0000	0.0000		0.0000	0.0000			0.0000			0.0000
Off-Road	0.3323	2.1850	1.8681	2.9700e-003		0.1733	0.1733		0.1733	0.1733	0.0000	281.4481	281.4481	0.0297		282.0721
Total	**639.2584**	**2.1850**	**1.8681**	**2.9700e-003**		**0.1733**	**0.1733**		**0.1733**	**0.1733**	**0.0000**	**281.4481**	**281.4481**	**0.0297**		**282.0721**

3.7 Architectural Coating - 2017

Mitigated Construction Off-Site

	ROG	NOx	CO	SO2	Fugitive PM10	Exhaust PM10	PM10 Total	Fugitive PM2.5	Exhaust PM2.5	PM2.5 Total	Bio- CO2	NBio- CO2	Total CO2	CH4	N2O	CO2e
Category	lb/day										lb/day					
Hauling	0.0000	0.0000	0.0000	0.0000	0.0000	0.0000	0.0000	0.0000	0.0000	0.0000		0.0000	0.0000	0.0000		0.0000
Vendor	0.0000	0.0000	0.0000	0.0000	0.0000	0.0000	0.0000	0.0000	0.0000	0.0000		0.0000	0.0000	0.0000		0.0000
Worker	0.1544	0.1924	1.7994	4.4900e-003	0.3779	2.7500e-003	0.3806	0.1002	2.5300e-003	0.1028		360.7082	360.7082	0.0185		361.0971
Total	**0.1544**	**0.1924**	**1.7994**	**4.4900e-003**	**0.3779**	**2.7500e-003**	**0.3806**	**0.1002**	**2.5300e-003**	**0.1028**		**360.7082**	**360.7082**	**0.0185**		**361.0971**

4.0 Operational Detail - Mobile

4.1 Mitigation Measures Mobile

	ROG	NOx	CO	SO2	Fugitive PM10	Exhaust PM10	PM10 Total	Fugitive PM2.5	Exhaust PM2.5	PM2.5 Total	Bio- CO2	NBio- CO2	Total CO2	CH4	N2O	CO2e
Category	lb/day										lb/day					
Mitigated	28.5300	55.9589	273.6373	0.7024	49.6970	0.8191	50.5161	13.2658	0.7558	14.0216		53,743.9192	53,743.9192	2.1110		53,788.2504
Unmitigated	28.5300	55.9589	273.6373	0.7024	49.6970	0.8191	50.5161	13.2658	0.7558	14.0216		53,743.9192	53,743.9192	2.1110		53,788.2504

4.2 Trip Summary Information

	Average Daily Trip Rate			Unmitigated	Mitigated
Land Use	Weekday	Saturday	Sunday	Annual VMT	Annual VMT
University/College (4Yr)	9,300.00	3,900.00	0.00	18,184,541	18,184,541
Total	9,300.00	3,900.00	0.00	18,184,541	18,184,541

4.3 Trip Type Information

	Miles			Trip %			Trip Purpose %		
Land Use	H-W or C-W	H-S or C-C	H-O or C-NW	H-W or C-W	H-S or C-C	H-O or C-NW	Primary	Diverted	Pass-by
University/College (4Yr)	9.50	7.30	7.30	6.40	88.60	5.00	91	9	0

LDA	LDT1	LDT2	MDV	LHD1	LHD2	MHD	HHD	OBUS	UBUS	MCY	SBUS	MH
0.513300	0.073549	0.191092	0.130830	0.036094	0.005140	0.012550	0.022916	0.001871	0.002062	0.006564	0.000586	0.003446

5.0 Energy Detail

4.4 Fleet Mix

Historical Energy Use: N

5.1 Mitigation Measures Energy

Exceed Title 24

	ROG	NOx	CO	SO2	Fugitive PM10	Exhaust PM10	PM10 Total	Fugitive PM2.5	Exhaust PM2.5	PM2.5 Total	Bio- CO2	NBio- CO2	Total CO2	CH4	N2O	CO2e
Category	lb/day										lb/day					
NaturalGas Mitigated	0.4582	4.1657	3.4992	0.0250		0.3166	0.3166		0.3166	0.3166		4,998.8765	4,998.8765	0.0958	0.0917	5,029.2988
NaturalGas Unmitigated	0.6186	5.6235	4.7238	0.0337		0.4274	0.4274		0.4274	0.4274		6,748.2256	6,748.2256	0.1293	0.1237	6,789.2941

5.2 Energy by Land Use - NaturalGas

Unmitigated

	NaturalGas Use	ROG	NOx	CO	SO2	Fugitive PM10	Exhaust PM10	PM10 Total	Fugitive PM2.5	Exhaust PM2.5	PM2.5 Total	Bio- CO2	NBio- CO2	Total CO2	CH4	N2O	CO2e
Land Use	kBTU/yr	lb/day										lb/day					
University/College (4Yr)	57359.9	0.6186	5.6235	4.7238	0.0337		0.4274	0.4274		0.4274	0.4274		6,748.2256	6,748.2256	0.1293	0.1237	6,789.2941
Total		**0.6186**	**5.6235**	**4.7238**	**0.0337**		**0.4274**	**0.4274**		**0.4274**	**0.4274**		**6,748.2256**	**6,748.2256**	**0.1293**	**0.1237**	**6,789.2941**

5.2 Energy by Land Use - NaturalGas

Mitigated

	NaturalGas Use	ROG	NOx	CO	SO2	Fugitive PM10	Exhaust PM10	PM10 Total	Fugitive PM2.5	Exhaust PM2.5	PM2.5 Total	Bio- CO2	NBio- CO2	Total CO2	CH4	N2O	CO2e
Land Use	kBTU/yr	lb/day										lb/day					
University/College (4Yr)	42.4905	0.4582	4.1657	3.4992	0.0250		0.3166	0.3166		0.3166	0.3166		4,998.8765	4,998.8765	0.0958	0.0917	5,029.2988
Total		**0.4582**	**4.1657**	**3.4992**	**0.0250**		**0.3166**	**0.3166**		**0.3166**	**0.3166**		**4,998.8765**	**4,998.8765**	**0.0958**	**0.0917**	**5,029.2988**

6.0 Area Detail

6.1 Mitigation Measures Area

Use Low VOC Paint - Non-Residential Interior

Use Low VOC Paint - Non-Residential Exterior

	ROG	NOx	CO	SO2	Fugitive PM10	Exhaust PM10	PM10 Total	Fugitive PM2.5	Exhaust PM2.5	PM2.5 Total	Bio- CO2	NBio- CO2	Total CO2	CH4	N2O	CO2e
Category	lb/day										lb/day					
Mitigated	12.5290	2.8500e-003	0.3083	2.0000e-005		1.1100e-003	1.1100e-003		1.1100e-003	1.1100e-003		0.6566	0.6566	1.7600e-003		0.6935
Unmitigated	15.3298	2.8500e-003	0.3083	2.0000e-005		1.1100e-003	1.1100e-003		1.1100e-003	1.1100e-003		0.6566	0.6566	1.7600e-003		0.6935

6.2 Area by SubCategory

Unmitigated

	ROG	NOx	CO	SO2	Fugitive PM10	Exhaust PM10	PM10 Total	Fugitive PM2.5	Exhaust PM2.5	PM2.5 Total	Bio- CO2	NBio- CO2	Total CO2	CH4	N2O	CO2e
SubCategory	lb/day										lb/day					
Architectural Coating	3.5010					0.0000	0.0000		0.0000	0.0000			0.0000			0.0000
Consumer Products	11.7998					0.0000	0.0000		0.0000	0.0000			0.0000			0.0000
Landscaping	0.0290	2.8500e-003	0.3083	2.0000e-005		1.1100e-003	1.1100e-003		1.1100e-003	1.1100e-003		0.6566	0.6566	1.7600e-003		0.6935
Total	**15.3298**	**2.8500e-003**	**0.3083**	**2.0000e-005**		**1.1100e-003**	**1.1100e-003**		**1.1100e-003**	**1.1100e-003**		**0.6566**	**0.6566**	**1.7600e-003**		**0.6935**

Mitigated

	ROG	NOx	CO	SO2	Fugitive PM10	Exhaust PM10	PM10 Total	Fugitive PM2.5	Exhaust PM2.5	PM2.5 Total	Bio- CO2	NBio- CO2	Total CO2	CH4	N2O	CO2e
SubCategory	lb/day										lb/day					
Architectural Coating	0.7002					0.0000	0.0000		0.0000	0.0000			0.0000			0.0000
Consumer Products	11.7998					0.0000	0.0000		0.0000	0.0000			0.0000			0.0000
Landscaping	0.0290	2.8500e-003	0.3083	2.0000e-005		1.1100e-003	1.1100e-003		1.1100e-003	1.1100e-003		0.6566	0.6566	1.7600e-003		0.6935
Total	**12.5290**	**2.8500e-003**	**0.3083**	**2.0000e-005**		**1.1100e-003**	**1.1100e-003**		**1.1100e-003**	**1.1100e-003**		**0.6566**	**0.6566**	**1.7600e-003**		**0.6935**

7.0 Water Detail

7.1 Mitigation Measures Water

Apply Water Conservation Strategy

8.0 Waste Detail

8.1 Mitigation Measures Waste

Institute Recycling and Composting Services

9.0 Operational Offroad

Equipment Type	Number	Hours/Day	Days/Year	Horse Power	Load Factor	Fuel Type

10.0 Vegetation

Appendix B

CO HOTSPOT MODELING

Title : San Diego County Subarea Annual CYr 2035 Default Title
Version : Emfac2011-LDV V2.50.57.246
Run Date : 2015/10/23 15:47:38
Scen Year: 2035 -- All model years in the range 1991 to 2035 selected
Season : Annual
Area : San Diego
****

Year: 2035 -- Model Years 1991 to 2035 Inclusive -- Annual
Emfac2011-LDV Emission Factors: V2.50.57.246

County Average San Diego County Average

Table 1: Running Exhaust Emissions (grams/mile)

Pollutant Name: Carbon Monoxide Temperature: 60F Relative Humidity: 50%

Speed MPH	LDA ALL	LDT1 ALL	LDT2 ALL	MDV ALL	LHD1 ALL	LHD2 ALL	T6TS ALL	T7IS ALL	OBUS ALL	UBUS ALL	MCY ALL	SBUS ALL	MH ALL	ALL ALL
3	1.214	1.193	1.148	1.6	1.297	1.584	1.186	115.611	1.238	7.232	23.719	7.972	0.898	1.448
4	1.191	1.17	1.127	1.57	1.297	1.584	1.186	115.611	1.238	7.232	23.719	7.972	0.898	1.426
5	1.169	1.148	1.106	1.54	1.297	1.584	1.186	115.611	1.238	7.232	23.719	7.972	0.898	1.404
6	1.147	1.126	1.085	1.511	1.196	1.464	1.089	106.095	1.136	6.581	22.894	7.316	0.823	1.368
7	1.126	1.104	1.065	1.482	1.105	1.355	1.001	97.576	1.045	6.004	22.132	6.729	0.755	1.335
8	1.106	1.083	1.045	1.454	1.024	1.257	0.923	89.939	0.963	5.49	21.429	6.202	0.693	1.303
9	1.085	1.063	1.026	1.427	0.95	1.168	0.853	83.083	0.89	5.031	20.779	5.729	0.636	1.272
10	1.066	1.043	1.007	1.401	0.883	1.087	0.789	76.918	0.824	4.622	20.18	5.304	0.585	1.243
11	1.046	1.024	0.989	1.375	0.822	1.014	0.732	71.367	0.764	4.257	19.627	4.921	0.539	1.216
12	1.028	1.005	0.971	1.35	0.767	0.948	0.681	66.363	0.711	3.929	19.117	4.576	0.497	1.189
13	1.009	0.987	0.954	1.326	0.717	0.887	0.635	61.845	0.662	3.635	18.646	4.265	0.459	1.164
14	0.992	0.969	0.937	1.302	0.672	0.832	0.593	57.762	0.618	3.372	18.213	3.983	0.425	1.14
15	0.974	0.952	0.92	1.279	0.631	0.782	0.555	54.068	0.579	3.134	17.815	3.728	0.394	1.117
16	0.957	0.935	0.904	1.256	0.593	0.736	0.521	50.721	0.543	2.921	17.45	3.498	0.367	1.094
17	0.941	0.918	0.888	1.234	0.559	0.694	0.489	47.686	0.511	2.728	17.116	3.288	0.343	1.073
18	0.924	0.902	0.873	1.213	0.528	0.656	0.461	44.931	0.481	2.554	16.812	3.098	0.322	1.053
19	0.908	0.886	0.858	1.192	0.5	0.621	0.435	42.429	0.454	2.397	16.536	2.926	0.303	1.033
20	0.893	0.871	0.843	1.171	0.474	0.589	0.412	40.155	0.43	2.255	16.286	2.769	0.289	1.014
21	0.878	0.856	0.829	1.151	0.45	0.56	0.391	38.086	0.408	2.126	16.062	2.626	0.276	0.996
22	0.863	0.841	0.815	1.132	0.428	0.533	0.372	36.203	0.388	2.009	15.863	2.496	0.265	0.978
23	0.849	0.827	0.801	1.113	0.408	0.509	0.354	34.489	0.369	1.903	15.689	2.378	0.255	0.962
24	0.835	0.813	0.788	1.094	0.39	0.486	0.338	32.928	0.353	1.807	15.537	2.271	0.245	0.945
25	0.821	0.8	0.775	1.076	0.373	0.465	0.323	31.508	0.337	1.72	15.409	2.173	0.236	0.93
26	0.807	0.786	0.762	1.058	0.358	0.446	0.31	30.215	0.324	1.641	15.304	2.084	0.228	0.915
27	0.794	0.773	0.75	1.041	0.344	0.429	0.298	29.039	0.311	1.569	15.221	2.002	0.221	0.9
28	0.781	0.761	0.738	1.024	0.331	0.413	0.287	27.97	0.299	1.504	15.161	1.929	0.214	0.886
29	0.769	0.748	0.726	1.007	0.32	0.398	0.277	27	0.289	1.445	15.123	1.862	0.208	0.873
30	0.757	0.736	0.714	0.991	0.309	0.385	0.268	26.121	0.28	1.392	15.108	1.801	0.203	0.86
31	0.745	0.725	0.703	0.975	0.299	0.373	0.26	25.326	0.271	1.344	15.116	1.746	0.198	0.848
32	0.733	0.713	0.692	0.96	0.291	0.362	0.253	24.61	0.263	1.3	15.147	1.697	0.193	0.836
33	0.721	0.702	0.681	0.945	0.282	0.351	0.246	23.966	0.257	1.261	15.203	1.653	0.189	0.824
34	0.71	0.691	0.671	0.93	0.275	0.342	0.24	23.391	0.25	1.226	15.283	1.613	0.186	0.814
35	0.699	0.68	0.66	0.916	0.269	0.334	0.235	22.879	0.245	1.194	15.39	1.578	0.183	0.803
36	0.689	0.67	0.65	0.902	0.263	0.326	0.23	22.429	0.24	1.166	15.523	1.547	0.18	0.793
37	0.678	0.66	0.64	0.888	0.258	0.319	0.226	22.035	0.236	1.142	15.685	1.519	0.177	0.784
38	0.668	0.65	0.631	0.875	0.253	0.313	0.223	21.696	0.232	1.12	15.876	1.496	0.175	0.775
39	0.658	0.64	0.621	0.862	0.249	0.308	0.22	21.41	0.229	1.102	16.098	1.476	0.174	0.766
40	0.648	0.631	0.612	0.849	0.245	0.303	0.217	21.173	0.227	1.086	16.354	1.46	0.172	0.758

CALINE4: CALIFORNIA LINE SOURCE DISPERSION MODEL
JUNE 1989 VERSION
PAGE 1

JOB: LINDA VISTA RD AND NAPA ST AMNP
RUN: Hour 1 (WORST CASE ANGLE)
POLLUTANT: Carbon Monoxide

I. SITE VARIABLES

U= .5 M/S Z0= 100. CM ALT= 0. (M)
BRG= WORST CASE VD= .0 CM/S
CLAS= 7 (G) VS= .0 CM/S
MIXH= 1000. M AMB= .0 PPM
SIGTH= 5. DEGREES TEMP= 15.6 DEGREE (C)

II. LINK VARIABLES

LINK DESCRIPTION	LINK COORDINATES (M) X1	Y1	X2	Y2	TYPE	VPH	EF (G/MI)	H (M)	W (M)
A. NF	5	-450	5	-150	AG	1035	.9	.0	15.0
B. NA	5	-150	5	0	AG	1001	1.2	.0	9.9
C. ND	5	0	5	150	AG	1343	1.0	.0	9.9
D. NE	5	150	5	450	AG	1343	.9	.0	15.0
E. SF	-5	450	-5	150	AG	956	.9	.0	15.0
F. SA	-5	150	-5	0	AG	887	1.2	.0	9.9
G. SD	-5	0	-5	-150	AG	917	.9	.0	9.9
H. SE	-5	-150	-5	-450	AG	917	.9	.0	15.0
I. WF	450	5	150	5	AG	794	.9	.0	10.5
J. WA	150	5	0	5	AG	486	1.3	.0	9.9
K. WD	0	5	-150	5	AG	661	1.3	.0	9.9
L. WE	-150	5	-450	5	AG	661	.9	.0	10.5
M. EF	-450	-5	-150	-5	AG	553	.9	.0	10.5
N. EA	-150	-5	0	-5	AG	196	1.3	.0	9.9
O. ED	0	-5	150	-5	AG	417	1.0	.0	9.9
P. EE	150	-5	450	-5	AG	417	.9	.0	10.5
Q. NL	0	0	2	-150	AG	34	1.1	.0	9.9
R. SL	0	0	-2	150	AG	69	1.1	.0	9.9
S. WL	0	0	150	5	AG	308	1.3	.0	9.9
T. EL	0	0	-150	-5	AG	357	1.3	.0	9.9

III. RECEPTOR LOCATIONS

RECEPTOR	COORDINATES (M) X	Y	Z
1. NE3	12	10	1.8
2. SE3	12	-10	1.8
3. SW3	-12	-10	1.8
4. NW3	-12	10	1.8

IV. MODEL RESULTS (WORST CASE WIND ANGLE)

RECEPTOR	BRG (DEG)	PRED CONC (PPM)	CONC/LINK (PPM) A	B	C	D	E	F	G	H
1. NE3	265.	.4	.0	.0	.0	.0	.0	.0	.0	.0
2. SE3	355.	.4	.0	.0	.2	.0	.0	.0	.0	.0
3. SW3	5.	.4	.0	.0	.0	.0	.0	.1	.0	.0
4. NW3	95.	.4	.0	.0	.0	.0	.0	.0	.0	.0

RECEPTOR	CONC/LINK (PPM) I	J	K	L	M	N	O	P	Q	R	S	T
1. NE3	.0	.0	.2	.0	.0	.0	.0	.0	.0	.0	.0	.0
2. SE3	.0	.0	.0	.0	.0	.0	.0	.0	.0	.0	.0	.0
3. SW3	.0	.0	.0	.0	.0	.0	.0	.0	.0	.0	.0	.0
4. NW3	.0	.1	.0	.0	.0	.0	.0	.0	.0	.0	.0	.0

CALINE4: CALIFORNIA LINE SOURCE DISPERSION MODEL
JUNE 1989 VERSION
PAGE 1

JOB: LINDA VISTA RD AND NAPA ST AMWP
RUN: Hour 1 (WORST CASE ANGLE)
POLLUTANT: Carbon Monoxide

I. SITE VARIABLES

U= .5 M/S Z0= 100. CM ALT= 0. (M)
BRG= WORST CASE VD= .0 CM/S
CLAS= 7 (G) VS= .0 CM/S
MIXH= 1000. M AMB= .0 PPM
SIGTH= 5. DEGREES TEMP= 15.6 DEGREE (C)

II. LINK VARIABLES

LINK DESCRIPTION	LINK COORDINATES (M) X1	Y1	X2	Y2	TYPE	VPH	EF (G/MI)	H (M)	W (M)
A. NF	5	-450	5	-150	AG	1151	.9	.0	15.0
B. NA	5	-150	5	0	AG	1117	1.2	.0	9.9
C. ND	5	0	5	150	AG	1584	1.0	.0	9.9
D. NE	5	150	5	450	AG	1584	.9	.0	15.0
E. SF	-5	450	-5	150	AG	983	.9	.0	15.0
F. SA	-5	150	-5	0	AG	912	1.2	.0	9.9
G. SD	-5	0	-5	-150	AG	930	.9	.0	9.9
H. SE	-5	-150	-5	-450	AG	930	.9	.0	15.0
I. WF	450	5	150	5	AG	809	.9	.0	10.5
J. WA	150	5	0	5	AG	501	1.3	.0	9.9
K. WD	0	5	-150	5	AG	673	1.2	.0	9.9
L. WE	-150	5	-450	5	AG	673	.9	.0	10.5
M. EF	-450	-5	-150	-5	AG	663	.9	.0	10.5
N. EA	-150	-5	0	-5	AG	196	1.3	.0	9.9
O. ED	0	-5	150	-5	AG	419	1.0	.0	9.9
P. EE	150	-5	450	-5	AG	419	.9	.0	10.5
Q. NL	0	0	2	-150	AG	34	1.2	.0	9.9
R. SL	0	0	-2	150	AG	71	1.2	.0	9.9
S. WL	0	0	150	5	AG	308	1.3	.0	9.9
T. EL	0	0	-150	-5	AG	467	1.4	.0	9.9

III. RECEPTOR LOCATIONS

RECEPTOR	COORDINATES (M) X	Y	Z
1. NE3	12	10	1.8
2. SE3	12	-10	1.8
3. SW3	-12	-10	1.8
4. NW3	-12	10	1.8

IV. MODEL RESULTS (WORST CASE WIND ANGLE)

RECEPTOR	BRG (DEG)	PRED CONC (PPM)	CONC/LINK (PPM) A	B	C	D	E	F	G	H
1. NE3	265.	.4	.0	.0	.0	.0	.0	.0	.0	.0
2. SE3	355.	.4	.0	.0	.2	.0	.0	.0	.0	.0
3. SW3	5.	.4	.0	.0	.0	.0	.0	.1	.0	.0
4. NW3	94.	.4	.0	.0	.0	.0	.0	.0	.0	.0

RECEPTOR	CONC/LINK (PPM) I	J	K	L	M	N	O	P	Q	R	S	T
1. NE3	.0	.0	.1	.0	.0	.0	.0	.0	.0	.0	.0	.0
2. SE3	.0	.0	.0	.0	.0	.0	.0	.0	.0	.0	.0	.0
3. SW3	.0	.0	.0	.0	.0	.0	.0	.0	.0	.0	.0	.0
4. NW3	.0	.1	.0	.0	.0	.0	.0	.0	.0	.0	.0	.0

CALINE4: CALIFORNIA LINE SOURCE DISPERSION MODEL
JUNE 1989 VERSION
PAGE 1

JOB: LINDA VISTA RD AND NAPA ST PMNP
RUN: Hour 1 (WORST CASE ANGLE)
POLLUTANT: Carbon Monoxide

I. SITE VARIABLES

U= .5 M/S Z0= 100. CM ALT= 0. (M)
BRG= WORST CASE VD= .0 CM/S
CLAS= 7 (G) VS= .0 CM/S
MIXH= 1000. M AMB= .0 PPM
SIGTH= 5. DEGREES TEMP= 15.6 DEGREE (C)

II. LINK VARIABLES

LINK DESCRIPTION	LINK COORDINATES (M) X1	Y1	X2	Y2	TYPE	VPH	EF (G/MI)	H (M)	W (M)
A. NF	2	-450	2	-150	AG	1153	.9	.0	10.5
B. NA	2	-150	2	0	AG	1106	1.4	.0	9.9
C. ND	2	0	2	150	AG	1460	1.1	.0	9.9
D. NE	2	150	2	450	AG	1460	.9	.0	10.5
E. SF	-2	450	-2	150	AG	1468	.9	.0	10.5
F. SA	-2	150	-2	0	AG	1236	1.4	.0	9.9
G. SD	-2	0	-2	-150	AG	1176	1.1	.0	9.9
H. SE	-2	-150	-2	-450	AG	1176	.9	.0	10.5
I. WF	450	5	150	5	AG	674	.9	.0	15.0
J. WA	150	5	0	5	AG	368	1.3	.0	9.9
K. WD	0	5	-150	5	AG	668	1.0	.0	9.9
L. WE	-150	5	-450	5	AG	668	.9	.0	15.0
M. EF	-450	-5	-150	-5	AG	841	.9	.0	15.0
N. EA	-150	-5	0	-5	AG	340	1.3	.0	9.9
O. ED	0	-5	150	-5	AG	832	1.0	.0	9.9
P. EE	150	-5	450	-5	AG	832	.9	.0	15.0
Q. NL	0	0	2	-150	AG	47	1.1	.0	9.9
R. SL	0	0	-2	150	AG	232	1.1	.0	9.9
S. WL	0	0	150	2	AG	306	1.3	.0	9.9
T. EL	0	0	-150	-2	AG	501	1.4	.0	9.9

III. RECEPTOR LOCATIONS

RECEPTOR	COORDINATES (M) X	Y	Z
1. NE3	8	12	1.8
2. SE3	8	-12	1.8
3. SW3	-8	-12	1.8
4. NW3	-8	12	1.8

IV. MODEL RESULTS (WORST CASE WIND ANGLE)

RECEPTOR	BRG (DEG)	PRED CONC (PPM)	CONC/LINK (PPM) A	B	C	D	E	F	G	H
1. NE3	184.	.6	.0	.3	.0	.0	.0	.0	.1	.0
2. SE3	355.	.7	.0	.0	.3	.0	.0	.2	.0	.0
3. SW3	4.	.7	.0	.0	.1	.0	.0	.3	.0	.0
4. NW3	175.	.6	.0	.1	.0	.0	.0	.0	.2	.0

RECEPTOR	CONC/LINK (PPM) I	J	K	L	M	N	O	P	Q	R	S	T
1. NE3	.0	.0	.0	.0	.0	.0	.0	.0	.0	.0	.0	.0
2. SE3	.0	.0	.0	.0	.0	.0	.0	.0	.0	.0	.0	.0
3. SW3	.0	.0	.0	.0	.0	.0	.0	.0	.0	.0	.0	.0
4. NW3	.0	.0	.0	.0	.0	.0	.0	.0	.0	.0	.0	.0

CALINE4: CALIFORNIA LINE SOURCE DISPERSION MODEL
JUNE 1989 VERSION
PAGE 1

JOB: LINDA VISTA RD AND NAPA ST PMWP
RUN: Hour 1 (WORST CASE ANGLE)
POLLUTANT: Carbon Monoxide

I. SITE VARIABLES

U= .5 M/S Z0= 100. CM ALT= 0. (M)
BRG= WORST CASE VD= .0 CM/S
CLAS= 7 (G) VS= .0 CM/S
MIXH= 1000. M AMB= .0 PPM
SIGTH= 5. DEGREES TEMP= 15.6 DEGREE (C)

II. LINK VARIABLES

LINK DESCRIPTION	LINK COORDINATES (M) X1	Y1	X2	Y2	TYPE	VPH	EF (G/MI)	H (M)	W (M)
A. NF	2	-450	2	-150	AG	1221	.9	.0	10.5
B. NA	2	-150	2	0	AG	1174	1.4	.0	9.9
C. ND	2	0	2	150	AG	1603	1.1	.0	9.9
D. NE	2	150	2	450	AG	1603	.9	.0	10.5
E. SF	-2	450	-2	150	AG	1682	.9	.0	10.5
F. SA	-2	150	-2	0	AG	1437	1.4	.0	9.9
G. SD	-2	0	-2	-150	AG	1279	1.1	.0	9.9
H. SE	-2	-150	-2	-450	AG	1279	.9	.0	10.5
I. WF	450	5	150	5	AG	683	.9	.0	15.0
J. WA	150	5	0	5	AG	377	1.3	.0	9.9
K. WD	0	5	-150	5	AG	766	1.0	.0	9.9
L. WE	-150	5	-450	5	AG	766	.9	.0	15.0
M. EF	-450	-5	-150	-5	AG	907	.9	.0	15.0
N. EA	-150	-5	0	-5	AG	340	1.3	.0	9.9
O. ED	0	-5	150	-5	AG	845	1.0	.0	9.9
P. EE	150	-5	450	-5	AG	845	.9	.0	15.0
Q. NL	0	0	2	-150	AG	47	1.1	.0	9.9
R. SL	0	0	-2	150	AG	245	1.1	.0	9.9
S. WL	0	0	150	2	AG	306	1.3	.0	9.9
T. EL	0	0	-150	-2	AG	567	1.5	.0	9.9

III. RECEPTOR LOCATIONS

RECEPTOR	COORDINATES (M) X	Y	Z
1. NE3	8	12	1.8
2. SE3	8	-12	1.8
3. SW3	-8	-12	1.8
4. NW3	-8	12	1.8

IV. MODEL RESULTS (WORST CASE WIND ANGLE)

RECEPTOR	BRG (DEG)	PRED CONC (PPM)	CONC/LINK (PPM) A	B	C	D	E	F	G	H
1. NE3	355.	.6	.0	.0	.4	.0	.0	.2	.0	.0
2. SE3	355.	.7	.0	.0	.3	.0	.0	.2	.0	.0
3. SW3	4.	.8	.0	.0	.1	.0	.0	.3	.0	.0
4. NW3	175.	.7	.0	.2	.0	.0	.0	.0	.2	.0

RECEPTOR	CONC/LINK (PPM) I	J	K	L	M	N	O	P	Q	R	S	T
1. NE3	.0	.0	.0	.0	.0	.0	.0	.0	.0	.0	.0	.0
2. SE3	.0	.0	.0	.0	.0	.0	.0	.0	.0	.0	.0	.0
3. SW3	.0	.0	.0	.0	.0	.0	.0	.0	.0	.0	.0	.0
4. NW3	.0	.0	.0	.0	.0	.0	.0	.0	.0	.0	.0	.0

CALINE4: CALIFORNIA LINE SOURCE DISPERSION MODEL
JUNE 1989 VERSION
PAGE 1

JOB: LINDA VISTA RD AND COLUSA ST AMNP
RUN: Hour 1 (WORST CASE ANGLE)
POLLUTANT: Carbon Monoxide

I. SITE VARIABLES

U= .5 M/S Z0= 100. CM ALT= 0. (M)
BRG= WORST CASE VD= .0 CM/S
CLAS= 7 (G) VS= .0 CM/S
MIXH= 1000. M AMB= .0 PPM
SIGTH= 5. DEGREES TEMP= 15.6 DEGREE (C)

II. LINK VARIABLES

LINK DESCRIPTION	LINK COORDINATES (M) X1	Y1	X2	Y2	TYPE	VPH	EF (G/MI)	H (M)	W (M)
A. NF	2	-450	2	-150	AG	86	.9	.0	10.5
B. NA	2	-150	2	0	AG	38	1.5	.0	9.9
C. ND	2	0	2	150	AG	0	1.5	.0	9.9
D. NE	2	150	2	450	AG	0	.9	.0	10.5
E. SF	-2	450	-2	150	AG	0	.9	.0	10.5
F. SA	-2	150	-2	0	AG	0	1.5	.0	9.9
G. SD	-2	0	-2	-150	AG	52	1.5	.0	9.9
H. SE	-2	-150	-2	-450	AG	52	.9	.0	10.5
I. WF	450	7	150	7	AG	746	.9	.0	15.0
J. WA	150	7	0	7	AG	712	1.1	.0	9.9
K. WD	0	7	-150	7	AG	760	.9	.0	9.9
L. WE	-150	7	-450	7	AG	760	.9	.0	15.0
M. EF	-450	-7	-150	-7	AG	629	.9	.0	15.0
N. EA	-150	-7	0	-7	AG	629	1.1	.0	13.5
O. ED	0	-7	150	-7	AG	649	.9	.0	9.9
P. EE	150	-7	450	-7	AG	649	.9	.0	15.0
Q. NL	0	0	2	-150	AG	48	1.5	.0	9.9
R. SL	0	0	-2	150	AG	0	1.5	.0	9.9
S. WL	0	0	150	5	AG	34	1.1	.0	9.9
T. EL	0	0	-150	-5	AG	0	1.1	.0	9.9

III. RECEPTOR LOCATIONS

RECEPTOR	COORDINATES (M) X	Y	Z
1. NE3	8	14	1.8
2. SE3	8	-14	1.8
3. SW3	-8	-14	1.8
4. NW3	-8	14	1.8

IV. MODEL RESULTS (WORST CASE WIND ANGLE)

RECEPTOR	BRG (DEG)	PRED CONC (PPM)	CONC/LINK (PPM) A	B	C	D	E	F	G	H
1. NE3	95.	.2	.0	.0	.0	.0	.0	.0	.0	.0
2. SE3	275.	.2	.0	.0	.0	.0	.0	.0	.0	.0
3. SW3	84.	.2	.0	.0	.0	.0	.0	.0	.0	.0
4. NW3	95.	.2	.0	.0	.0	.0	.0	.0	.0	.0

RECEPTOR	CONC/LINK (PPM) I	J	K	L	M	N	O	P	Q	R	S	T
1. NE3	.0	.1	.0	.0	.0	.0	.0	.0	.0	.0	.0	.0
2. SE3	.0	.0	.0	.0	.0	.1	.0	.0	.0	.0	.0	.0
3. SW3	.0	.0	.0	.0	.0	.0	.0	.0	.0	.0	.0	.0
4. NW3	.0	.1	.0	.0	.0	.0	.0	.0	.0	.0	.0	.0

CALINE4: CALIFORNIA LINE SOURCE DISPERSION MODEL
JUNE 1989 VERSION
PAGE 1

JOB: LINDA VISTA RD AND COLUSA ST AMWP
RUN: Hour 1 (WORST CASE ANGLE)
POLLUTANT: Carbon Monoxide

I. SITE VARIABLES

U= .5 M/S Z0= 100. CM ALT= 0. (M)
BRG= WORST CASE VD= .0 CM/S
CLAS= 7 (G) VS= .0 CM/S
MIXH= 1000. M AMB= .0 PPM
SIGTH= 5. DEGREES TEMP= 15.6 DEGREE (C)

II. LINK VARIABLES

LINK DESCRIPTION	LINK COORDINATES (M) X1	Y1	X2	Y2	TYPE	VPH	EF (G/MI)	H (M)	W (M)
A. NF	2	-450	2	-150	AG	161	.9	.0	10.5
B. NA	2	-150	2	0	AG	88	1.5	.0	9.9
C. ND	2	0	2	150	AG	0	1.5	.0	9.9
D. NE	2	150	2	450	AG	0	.9	.0	10.5
E. SF	-2	450	-2	150	AG	0	.9	.0	10.5
F. SA	-2	150	-2	0	AG	0	1.5	.0	9.9
G. SD	-2	0	-2	-150	AG	61	1.5	.0	9.9
H. SE	-2	-150	-2	-450	AG	61	.9	.0	10.5
I. WF	450	7	150	7	AG	779	.9	.0	15.0
J. WA	150	7	0	7	AG	739	1.1	.0	9.9
K. WD	0	7	-150	7	AG	812	.9	.0	9.9
L. WE	-150	7	-450	7	AG	812	.9	.0	15.0
M. EF	-450	-7	-150	-7	AG	699	.9	.0	15.0
N. EA	-150	-7	0	-7	AG	699	1.1	.0	13.5
O. ED	0	-7	150	-7	AG	766	.9	.0	9.9
P. EE	150	-7	450	-7	AG	766	.9	.0	15.0
Q. NL	0	0	2	-150	AG	73	1.5	.0	9.9
R. SL	0	0	-2	150	AG	0	1.5	.0	9.9
S. WL	0	0	150	5	AG	40	1.1	.0	9.9
T. EL	0	0	-150	-5	AG	0	1.1	.0	9.9

III. RECEPTOR LOCATIONS

RECEPTOR	COORDINATES (M) X	Y	Z
1. NE3	8	14	1.8
2. SE3	8	-14	1.8
3. SW3	-8	-14	1.8
4. NW3	-8	14	1.8

IV. MODEL RESULTS (WORST CASE WIND ANGLE)

RECEPTOR	BRG (DEG)	PRED CONC (PPM)	CONC/LINK (PPM) A	B	C	D	E	F	G	H
1. NE3	96.	.2	.0	.0	.0	.0	.0	.0	.0	.0
2. SE3	275.	.2	.0	.0	.0	.0	.0	.0	.0	.0
3. SW3	84.	.2	.0	.0	.0	.0	.0	.0	.0	.0
4. NW3	95.	.2	.0	.0	.0	.0	.0	.0	.0	.0

RECEPTOR	CONC/LINK (PPM) I	J	K	L	M	N	O	P	Q	R	S	T
1. NE3	.0	.1	.0	.0	.0	.0	.0	.0	.0	.0	.0	.0
2. SE3	.0	.0	.0	.0	.0	.1	.0	.0	.0	.0	.0	.0
3. SW3	.0	.0	.0	.0	.0	.0	.0	.0	.0	.0	.0	.0
4. NW3	.0	.1	.0	.0	.0	.0	.0	.0	.0	.0	.0	.0

CALINE4: CALIFORNIA LINE SOURCE DISPERSION MODEL
JUNE 1989 VERSION
PAGE 1

JOB: LINDA VISTA RD AND COLUSA ST PMNP
RUN: Hour 1 (WORST CASE ANGLE)
POLLUTANT: Carbon Monoxide

I. SITE VARIABLES

U= .5 M/S Z0= 100. CM ALT= 0. (M)
BRG= WORST CASE VD= .0 CM/S
CLAS= 7 (G) VS= .0 CM/S
MIXH= 1000. M AMB= .0 PPM
SIGTH= 5. DEGREES TEMP= 15.6 DEGREE (C)

II. LINK VARIABLES

LINK DESCRIPTION	LINK COORDINATES (M) X1	Y1	X2	Y2	TYPE	VPH	EF (G/MI)	H (M)	W (M)
A. NF	5	-450	5	-150	AG	51	.9	.0	15.0
B. NA	5	-150	5	0	AG	27	1.5	.0	9.9
C. ND	5	0	5	150	AG	0	1.5	.0	9.9
D. NE	5	150	5	450	AG	0	.9	.0	15.0
E. SF	-5	450	-5	150	AG	0	.9	.0	15.0
F. SA	-5	150	-5	0	AG	0	1.5	.0	9.9
G. SD	-5	0	-5	-150	AG	96	1.5	.0	9.9
H. SE	-5	-150	-5	-450	AG	96	.9	.0	15.0
I. WF	450	7	150	7	AG	897	.9	.0	15.0
J. WA	150	7	0	7	AG	850	1.1	.0	13.5
K. WD	0	7	-150	7	AG	874	.9	.0	9.9
L. WE	-150	7	-450	7	AG	874	.9	.0	15.0
M. EF	-450	-7	-150	-7	AG	1021	.9	.0	15.0
N. EA	-150	-7	0	-7	AG	1021	1.1	.0	9.9
O. ED	0	-7	150	-7	AG	999	.9	.0	9.9
P. EE	150	-7	450	-7	AG	999	.9	.0	15.0
Q. NL	0	0	2	-150	AG	24	1.5	.0	9.9
R. SL	0	0	-2	150	AG	0	1.5	.0	9.9
S. WL	0	0	150	5	AG	47	1.1	.0	9.9
T. EL	0	0	-150	-5	AG	0	1.1	.0	9.9

III. RECEPTOR LOCATIONS

RECEPTOR	COORDINATES (M) X	Y	Z
1. NE3	12	14	1.8
2. SE3	12	-14	1.8
3. SW3	-12	-14	1.8
4. NW3	-12	14	1.8

IV. MODEL RESULTS (WORST CASE WIND ANGLE)

RECEPTOR	BRG (DEG)	PRED CONC (PPM)	CONC/LINK (PPM) A	B	C	D	E	F	G	H
1. NE3	95.	.3	.0	.0	.0	.0	.0	.0	.0	.0
2. SE3	275.	.2	.0	.0	.0	.0	.0	.0	.0	.0
3. SW3	84.	.2	.0	.0	.0	.0	.0	.0	.0	.0
4. NW3	95.	.2	.0	.0	.0	.0	.0	.0	.0	.0

RECEPTOR	CONC/LINK (PPM) I	J	K	L	M	N	O	P	Q	R	S	T
1. NE3	.0	.2	.0	.0	.0	.0	.0	.0	.0	.0	.0	.0
2. SE3	.0	.0	.0	.0	.0	.1	.0	.0	.0	.0	.0	.0
3. SW3	.0	.0	.0	.0	.0	.0	.1	.0	.0	.0	.0	.0
4. NW3	.0	.1	.0	.0	.0	.0	.0	.0	.0	.0	.0	.0

CALINE4: CALIFORNIA LINE SOURCE DISPERSION MODEL
JUNE 1989 VERSION
PAGE 1

JOB: LINDA VISTA RD AND COLUSA ST PMWP
RUN: Hour 1 (WORST CASE ANGLE)
POLLUTANT: Carbon Monoxide

I. SITE VARIABLES

U= .5 M/S Z0= 100. CM ALT= 0. (M)
BRG= WORST CASE VD= .0 CM/S
CLAS= 7 (G) VS= .0 CM/S
MIXH= 1000. M AMB= .0 PPM
SIGTH= 5. DEGREES TEMP= 15.6 DEGREE (C)

II. LINK VARIABLES

LINK DESCRIPTION	LINK COORDINATES (M) X1	Y1	X2	Y2	TYPE	VPH	EF (G/MI)	H (M)	W (M)
A. NF	5	-450	5	-150	AG	96	.9	.0	15.0
B. NA	5	-150	5	0	AG	57	1.5	.0	9.9
C. ND	5	0	5	150	AG	0	1.5	.0	9.9
D. NE	5	150	5	450	AG	0	.9	.0	15.0
E. SF	-5	450	-5	150	AG	0	.9	.0	15.0
F. SA	-5	150	-5	0	AG	0	1.5	.0	9.9
G. SD	-5	0	-5	-150	AG	163	1.5	.0	9.9
H. SE	-5	-150	-5	-450	AG	163	.9	.0	15.0
I. WF	450	7	150	7	AG	1012	.9	.0	15.0
J. WA	150	7	0	7	AG	920	1.1	.0	13.5
K. WD	0	7	-150	7	AG	959	.9	.0	9.9
L. WE	-150	7	-450	7	AG	959	.9	.0	15.0
M. EF	-450	-7	-150	-7	AG	1100	.9	.0	15.0
N. EA	-150	-7	0	-7	AG	1100	1.1	.0	9.9
O. ED	0	-7	150	-7	AG	1086	.9	.0	9.9
P. EE	150	-7	450	-7	AG	1086	.9	.0	15.0
Q. NL	0	0	2	-150	AG	39	1.5	.0	9.9
R. SL	0	0	-2	150	AG	0	1.5	.0	9.9
S. WL	0	0	150	5	AG	92	1.1	.0	9.9
T. EL	0	0	-150	-5	AG	0	1.1	.0	9.9

III. RECEPTOR LOCATIONS

RECEPTOR	COORDINATES (M) X	Y	Z
1. NE3	12	14	1.8
2. SE3	12	-14	1.8
3. SW3	-12	-14	1.8
4. NW3	-12	14	1.8

IV. MODEL RESULTS (WORST CASE WIND ANGLE)

RECEPTOR	BRG (DEG)	PRED CONC (PPM)	CONC/LINK (PPM) A	B	C	D	E	F	G	H
1. NE3	95.	.3	.0	.0	.0	.0	.0	.0	.0	.0
2. SE3	275.	.3	.0	.0	.0	.0	.0	.0	.0	.0
3. SW3	84.	.3	.0	.0	.0	.0	.0	.0	.0	.0
4. NW3	95.	.3	.0	.0	.0	.0	.0	.0	.0	.0

RECEPTOR	CONC/LINK (PPM) I	J	K	L	M	N	O	P	Q	R	S	T
1. NE3	.0	.2	.0	.0	.0	.0	.0	.0	.0	.0	.0	.0
2. SE3	.0	.0	.0	.0	.0	.2	.0	.0	.0	.0	.0	.0
3. SW3	.0	.0	.0	.0	.0	.0	.1	.0	.0	.0	.0	.0
4. NW3	.0	.2	.0	.0	.0	.0	.0	.0	.0	.0	.0	.0

CALINE4: CALIFORNIA LINE SOURCE DISPERSION MODEL
JUNE 1989 VERSION
PAGE 1

JOB: LINDA VISTA RD AND ALCALA APTS AMNP
RUN: Hour 1 (WORST CASE ANGLE)
POLLUTANT: Carbon Monoxide

I. SITE VARIABLES

U= .5 M/S Z0= 100. CM ALT= 0. (M)
BRG= WORST CASE VD= .0 CM/S
CLAS= 7 (G) VS= .0 CM/S
MIXH= 1000. M AMB= .0 PPM
SIGTH= 5. DEGREES TEMP= 15.6 DEGREE (C)

II. LINK VARIABLES

LINK DESCRIPTION	LINK COORDINATES (M) X1	Y1	X2	Y2	TYPE	VPH	EF (G/MI)	H (M)	W (M)
A. NF	2	-450	2	-150	AG	0	.9	.0	10.5
B. NA	2	-150	2	0	AG	0	1.5	.0	9.9
C. ND	2	0	2	150	AG	60	1.5	.0	9.9
D. NE	2	150	2	450	AG	60	.9	.0	10.5
E. SF	-2	450	-2	150	AG	64	.9	.0	10.5
F. SA	-2	150	-2	0	AG	52	1.5	.0	9.9
G. SD	-2	0	-2	-150	AG	0	1.5	.0	9.9
H. SE	-2	-150	-2	-450	AG	0	.9	.0	10.5
I. WF	450	2	150	2	AG	1112	.9	.0	10.5
J. WA	150	2	0	2	AG	1112	1.3	.0	9.9
K. WD	0	2	-150	2	AG	1146	1.0	.0	9.9
L. WE	-150	2	-450	2	AG	1146	.9	.0	10.5
M. EF	-450	-2	-150	-2	AG	634	.9	.0	10.5
N. EA	-150	-2	0	-2	AG	592	1.1	.0	9.9
O. ED	0	-2	150	-2	AG	604	.9	.0	9.9
P. EE	150	-2	450	-2	AG	604	.9	.0	10.5
Q. NL	0	0	2	-150	AG	0	1.5	.0	9.9
R. SL	0	0	-2	150	AG	12	1.5	.0	9.9
S. WL	0	0	150	2	AG	0	1.1	.0	9.9
T. EL	0	0	-150	-2	AG	42	1.1	.0	9.9

III. RECEPTOR LOCATIONS

RECEPTOR	COORDINATES (M) X	Y	Z
1. NE3	8	8	1.8
2. SE3	8	-8	1.8
3. SW3	-8	-8	1.8
4. NW3	-8	8	1.8

IV. MODEL RESULTS (WORST CASE WIND ANGLE)

RECEPTOR	BRG (DEG)	PRED CONC (PPM)	CONC/LINK (PPM) A	B	C	D	E	F	G	H
1. NE3	94.	.4	.0	.0	.0	.0	.0	.0	.0	.0
2. SE3	85.	.3	.0	.0	.0	.0	.0	.0	.0	.0
3. SW3	85.	.3	.0	.0	.0	.0	.0	.0	.0	.0
4. NW3	94.	.4	.0	.0	.0	.0	.0	.0	.0	.0

RECEPTOR	CONC/LINK (PPM) I	J	K	L	M	N	O	P	Q	R	S	T
1. NE3	.0	.3	.0	.0	.0	.0	.0	.0	.0	.0	.0	.0
2. SE3	.0	.1	.0	.0	.0	.0	.1	.0	.0	.0	.0	.0
3. SW3	.0	.1	.0	.0	.0	.0	.1	.0	.0	.0	.0	.0
4. NW3	.0	.3	.0	.0	.0	.0	.0	.0	.0	.0	.0	.0

CALINE4: CALIFORNIA LINE SOURCE DISPERSION MODEL
JUNE 1989 VERSION
PAGE 1

JOB: LINDA VISTA RD AND ALCALA APTS AMWP
RUN: Hour 1 (WORST CASE ANGLE)
POLLUTANT: Carbon Monoxide

I. SITE VARIABLES

U= .5 M/S Z0= 100. CM ALT= 0. (M)
BRG= WORST CASE VD= .0 CM/S
CLAS= 7 (G) VS= .0 CM/S
MIXH= 1000. M AMB= .0 PPM
SIGTH= 5. DEGREES TEMP= 15.6 DEGREE (C)

II. LINK VARIABLES

LINK DESCRIPTION	LINK COORDINATES (M) X1	Y1	X2	Y2	TYPE	VPH	EF (G/MI)	H (M)	W (M)
A. NF	2	-450	2	-150	AG	0	.9	.0	10.5
B. NA	2	-150	2	0	AG	0	1.5	.0	9.9
C. ND	2	0	2	150	AG	125	1.5	.0	9.9
D. NE	2	150	2	450	AG	125	.9	.0	10.5
E. SF	-2	450	-2	150	AG	71	.9	.0	10.5
F. SA	-2	150	-2	0	AG	57	1.5	.0	9.9
G. SD	-2	0	-2	-150	AG	0	1.5	.0	9.9
H. SE	-2	-150	-2	-450	AG	0	.9	.0	10.5
I. WF	450	2	150	2	AG	1288	.9	.0	10.5
J. WA	150	2	0	2	AG	1288	1.3	.0	9.9
K. WD	0	2	-150	2	AG	1307	1.0	.0	9.9
L. WE	-150	2	-450	2	AG	1307	.9	.0	10.5
M. EF	-450	-2	-150	-2	AG	695	.9	.0	10.5
N. EA	-150	-2	0	-2	AG	608	1.1	.0	9.9
O. ED	0	-2	150	-2	AG	622	.9	.0	9.9
P. EE	150	-2	450	-2	AG	622	.9	.0	10.5
Q. NL	0	0	2	-150	AG	0	1.5	.0	9.9
R. SL	0	0	-2	150	AG	14	1.5	.0	9.9
S. WL	0	0	150	2	AG	0	1.1	.0	9.9
T. EL	0	0	-150	-2	AG	87	1.1	.0	9.9

III. RECEPTOR LOCATIONS

RECEPTOR	COORDINATES (M) X	Y	Z
1. NE3	8	8	1.8
2. SE3	8	-8	1.8
3. SW3	-8	-8	1.8
4. NW3	-8	8	1.8

IV. MODEL RESULTS (WORST CASE WIND ANGLE)

RECEPTOR	BRG (DEG)	PRED CONC (PPM)	CONC/LINK (PPM) A	B	C	D	E	F	G	H
1. NE3	94.	.5	.0	.0	.0	.0	.0	.0	.0	.0
2. SE3	85.	.3	.0	.0	.0	.0	.0	.0	.0	.0
3. SW3	85.	.3	.0	.0	.0	.0	.0	.0	.0	.0
4. NW3	94.	.5	.0	.0	.0	.0	.0	.0	.0	.0

RECEPTOR	CONC/LINK (PPM) I	J	K	L	M	N	O	P	Q	R	S	T
1. NE3	.0	.3	.0	.0	.0	.0	.0	.0	.0	.0	.0	.0
2. SE3	.0	.1	.0	.0	.0	.0	.1	.0	.0	.0	.0	.0
3. SW3	.0	.1	.0	.0	.0	.0	.1	.0	.0	.0	.0	.0
4. NW3	.0	.3	.0	.0	.0	.0	.0	.0	.0	.0	.0	.0

CALINE4: CALIFORNIA LINE SOURCE DISPERSION MODEL
JUNE 1989 VERSION
PAGE 1

JOB: LINDA VISTA RD AND ALCALA APTS PMNP
RUN: Hour 1 (WORST CASE ANGLE)
POLLUTANT: Carbon Monoxide

I. SITE VARIABLES

U= .5 M/S Z0= 100. CM ALT= 0. (M)
BRG= WORST CASE VD= .0 CM/S
CLAS= 7 (G) VS= .0 CM/S
MIXH= 1000. M AMB= .0 PPM
SIGTH= 5. DEGREES TEMP= 15.6 DEGREE (C)

II. LINK VARIABLES

LINK DESCRIPTION	LINK COORDINATES (M) X1	Y1	X2	Y2	TYPE	VPH	EF (G/MI)	H (M)	W (M)
A. NF	2	-450	2	-150	AG	0	.9	.0	10.5
B. NA	2	-150	2	0	AG	0	1.5	.0	9.9
C. ND	2	0	2	150	AG	111	1.5	.0	9.9
D. NE	2	150	2	450	AG	111	.9	.0	10.5
E. SF	-2	450	-2	150	AG	160	.9	.0	10.5
F. SA	-2	150	-2	0	AG	114	1.5	.0	9.9
G. SD	-2	0	-2	-150	AG	0	1.5	.0	9.9
H. SE	-2	-150	-2	-450	AG	0	.9	.0	10.5
I. WF	450	2	150	2	AG	888	.9	.0	10.5
J. WA	150	2	0	2	AG	888	1.3	.0	9.9
K. WD	0	2	-150	2	AG	979	1.0	.0	9.9
L. WE	-150	2	-450	2	AG	979	.9	.0	10.5
M. EF	-450	-2	-150	-2	AG	1238	.9	.0	10.5
N. EA	-150	-2	0	-2	AG	1150	1.3	.0	9.9
O. ED	0	-2	150	-2	AG	1196	1.0	.0	9.9
P. EE	150	-2	450	-2	AG	1196	.9	.0	10.5
Q. NL	0	0	2	-150	AG	0	1.5	.0	9.9
R. SL	0	0	-2	150	AG	46	1.5	.0	9.9
S. WL	0	0	150	2	AG	0	1.1	.0	9.9
T. EL	0	0	-150	-2	AG	88	1.1	.0	9.9

III. RECEPTOR LOCATIONS

RECEPTOR	COORDINATES (M) X	Y	Z
1. NE3	8	8	1.8
2. SE3	8	-8	1.8
3. SW3	-8	-8	1.8
4. NW3	-8	8	1.8

IV. MODEL RESULTS (WORST CASE WIND ANGLE)

RECEPTOR	BRG (DEG)	PRED CONC (PPM)	CONC/LINK (PPM) A	B	C	D	E	F	G	H
1. NE3	265.	.5	.0	.0	.0	.0	.0	.0	.0	.0
2. SE3	274.	.5	.0	.0	.0	.0	.0	.0	.0	.0
3. SW3	274.	.5	.0	.0	.0	.0	.0	.0	.0	.0
4. NW3	94.	.4	.0	.0	.0	.0	.0	.0	.0	.0

RECEPTOR	CONC/LINK (PPM) I	J	K	L	M	N	O	P	Q	R	S	T
1. NE3	.0	.0	.2	.0	.0	.1	.0	.0	.0	.0	.0	.0
2. SE3	.0	.0	.0	.0	.0	.3	.0	.0	.0	.0	.0	.0
3. SW3	.0	.0	.0	.0	.0	.3	.0	.0	.0	.0	.0	.0
4. NW3	.0	.2	.0	.0	.0	.0	.0	.0	.0	.0	.0	.0

CALINE4: CALIFORNIA LINE SOURCE DISPERSION MODEL
JUNE 1989 VERSION
PAGE 1

JOB: LINDA VISTA RD AND ALCALA APTS PMWP
RUN: Hour 1 (WORST CASE ANGLE)
POLLUTANT: Carbon Monoxide

I. SITE VARIABLES

U= .5 M/S Z0= 100. CM ALT= 0. (M)
BRG= WORST CASE VD= .0 CM/S
CLAS= 7 (G) VS= .0 CM/S
MIXH= 1000. M AMB= .0 PPM
SIGTH= 5. DEGREES TEMP= 15.6 DEGREE (C)

II. LINK VARIABLES

LINK DESCRIPTION	LINK COORDINATES (M) X1	Y1	X2	Y2	TYPE	VPH	EF (G/MI)	H (M)	W (M)
A. NF	2	-450	2	-150	AG	0	.9	.0	10.5
B. NA	2	-150	2	0	AG	0	1.5	.0	9.9
C. ND	2	0	2	150	AG	150	1.5	.0	9.9
D. NE	2	150	2	450	AG	150	.9	.0	10.5
E. SF	-2	450	-2	150	AG	219	.9	.0	10.5
F. SA	-2	150	-2	0	AG	155	1.5	.0	9.9
G. SD	-2	0	-2	-150	AG	0	1.5	.0	9.9
H. SE	-2	-150	-2	-450	AG	0	.9	.0	10.5
I. WF	450	2	150	2	AG	992	.9	.0	10.5
J. WA	150	2	0	2	AG	992	1.3	.0	9.9
K. WD	0	2	-150	2	AG	1112	1.0	.0	9.9
L. WE	-150	2	-450	2	AG	1112	.9	.0	10.5
M. EF	-450	-2	-150	-2	AG	1403	.9	.0	10.5
N. EA	-150	-2	0	-2	AG	1288	1.3	.0	9.9
O. ED	0	-2	150	-2	AG	1352	1.0	.0	9.9
P. EE	150	-2	450	-2	AG	1352	.9	.0	10.5
Q. NL	0	0	2	-150	AG	0	1.5	.0	9.9
R. SL	0	0	-2	150	AG	64	1.5	.0	9.9
S. WL	0	0	150	2	AG	0	1.1	.0	9.9
T. EL	0	0	-150	-2	AG	115	1.1	.0	9.9

III. RECEPTOR LOCATIONS

RECEPTOR	COORDINATES (M) X	Y	Z
1. NE3	8	8	1.8
2. SE3	8	-8	1.8
3. SW3	-8	-8	1.8
4. NW3	-8	8	1.8

IV. MODEL RESULTS (WORST CASE WIND ANGLE)

RECEPTOR	BRG (DEG)	PRED CONC (PPM)	CONC/LINK (PPM) A	B	C	D	E	F	G	H
1. NE3	265.	.5	.0	.0	.0	.0	.0	.0	.0	.0
2. SE3	274.	.5	.0	.0	.0	.0	.0	.0	.0	.0
3. SW3	274.	.5	.0	.0	.0	.0	.0	.0	.0	.0
4. NW3	94.	.5	.0	.0	.0	.0	.0	.0	.0	.0

RECEPTOR	CONC/LINK (PPM) I	J	K	L	M	N	O	P	Q	R	S	T
1. NE3	.0	.0	.2	.0	.0	.1	.0	.0	.0	.0	.0	.0
2. SE3	.0	.0	.0	.0	.0	.3	.0	.0	.0	.0	.0	.0
3. SW3	.0	.0	.0	.0	.0	.3	.0	.0	.0	.0	.0	.0
4. NW3	.0	.2	.0	.0	.0	.0	.1	.0	.0	.0	.0	.0

CALINE4: CALIFORNIA LINE SOURCE DISPERSION MODEL
JUNE 1989 VERSION
PAGE 1

JOB: LINDA VISTA RD AND GENESEE AVE AMNP
RUN: Hour 1 (WORST CASE ANGLE)
POLLUTANT: Carbon Monoxide

I. SITE VARIABLES

U= .5 M/S Z0= 100. CM ALT= 0. (M)
BRG= WORST CASE VD= .0 CM/S
CLAS= 7 (G) VS= .0 CM/S
MIXH= 1000. M AMB= .0 PPM
SIGTH= 5. DEGREES TEMP= 15.6 DEGREE (C)

II. LINK VARIABLES

LINK DESCRIPTION	LINK COORDINATES (M) X1	Y1	X2	Y2	TYPE	VPH	EF (G/MI)	H (M)	W (M)
A. NF	2	-450	2	-150	AG	1589	.9	.0	10.5
B. NA	2	-150	2	0	AG	1251	1.5	.0	9.9
C. ND	2	0	2	150	AG	1107	1.4	.0	9.9
D. NE	2	150	2	450	AG	1107	.9	.0	10.5
E. SF	-2	450	-2	150	AG	785	.9	.0	10.5
F. SA	-2	150	-2	0	AG	635	1.3	.0	9.9
G. SD	-2	0	-2	-150	AG	1383	1.4	.0	9.9
H. SE	-2	-150	-2	-450	AG	1383	.9	.0	10.5
I. WF	450	2	150	2	AG	1454	.9	.0	10.5
J. WA	150	2	0	2	AG	880	1.5	.0	9.9
K. WD	0	2	-150	2	AG	1049	1.3	.0	9.9
L. WE	-150	2	-450	2	AG	1049	.9	.0	10.5
M. EF	-450	-2	-150	-2	AG	1164	.9	.0	10.5
N. EA	-150	-2	0	-2	AG	1010	1.5	.0	9.9
O. ED	0	-2	150	-2	AG	1453	1.3	.0	9.9
P. EE	150	-2	450	-2	AG	1453	.9	.0	10.5
Q. NL	0	0	2	-150	AG	338	1.2	.0	9.9
R. SL	0	0	-2	150	AG	150	1.2	.0	9.9
S. WL	0	0	150	2	AG	574	1.3	.0	9.9
T. EL	0	0	-150	-2	AG	154	1.2	.0	9.9

III. RECEPTOR LOCATIONS

RECEPTOR	COORDINATES (M) X	Y	Z
1. NE3	8	8	1.8
2. SE3	8	-8	1.8
3. SW3	-8	-8	1.8
4. NW3	-8	8	1.8

IV. MODEL RESULTS (WORST CASE WIND ANGLE)

RECEPTOR	BRG (DEG)	PRED CONC (PPM)	CONC/LINK (PPM) A	B	C	D	E	F	G	H
1. NE3	185.	.9	.0	.4	.0	.0	.0	.0	.2	.0
2. SE3	275.	.8	.0	.1	.0	.0	.0	.0	.1	.0
3. SW3	85.	.9	.0	.0	.0	.0	.0	.0	.1	.0
4. NW3	175.	.9	.0	.2	.0	.0	.0	.0	.4	.0

RECEPTOR	CONC/LINK (PPM) I	J	K	L	M	N	O	P	Q	R	S	T
1. NE3	.0	.0	.0	.0	.0	.0	.0	.0	.0	.0	.0	.0
2. SE3	.0	.0	.1	.0	.0	.3	.0	.0	.0	.0	.0	.0
3. SW3	.0	.1	.0	.0	.0	.0	.3	.0	.0	.0	.1	.0
4. NW3	.0	.0	.0	.0	.0	.0	.0	.0	.0	.0	.0	.0

CALINE4: CALIFORNIA LINE SOURCE DISPERSION MODEL
JUNE 1989 VERSION
PAGE 1

JOB: LINDA VISTA RD AND GENESEE AVE AMWP
RUN: Hour 1 (WORST CASE ANGLE)
POLLUTANT: Carbon Monoxide

I. SITE VARIABLES

U= .5 M/S Z0= 100. CM ALT= 0. (M)
BRG= WORST CASE VD= .0 CM/S
CLAS= 7 (G) VS= .0 CM/S
MIXH= 1000. M AMB= .0 PPM
SIGTH= 5. DEGREES TEMP= 15.6 DEGREE (C)

II. LINK VARIABLES

LINK DESCRIPTION	LINK COORDINATES (M) X1	Y1	X2	Y2	TYPE	VPH	EF (G/MI)	H (M)	W (M)
A. NF	2	-450	2	-150	AG	1597	.9	.0	10.5
B. NA	2	-150	2	0	AG	1257	1.5	.0	9.9
C. ND	2	0	2	150	AG	1110	1.4	.0	9.9
D. NE	2	150	2	450	AG	1110	.9	.0	10.5
E. SF	-2	450	-2	150	AG	810	.9	.0	10.5
F. SA	-2	150	-2	0	AG	660	1.4	.0	9.9
G. SD	-2	0	-2	-150	AG	1453	1.4	.0	9.9
H. SE	-2	-150	-2	-450	AG	1453	.9	.0	10.5
I. WF	450	2	150	2	AG	1484	.9	.0	10.5
J. WA	150	2	0	2	AG	880	1.5	.0	9.9
K. WD	0	2	-150	2	AG	1051	1.3	.0	9.9
L. WE	-150	2	-450	2	AG	1051	.9	.0	10.5
M. EF	-450	-2	-150	-2	AG	1179	.9	.0	10.5
N. EA	-150	-2	0	-2	AG	1025	1.5	.0	9.9
O. ED	0	-2	150	-2	AG	1456	1.3	.0	9.9
P. EE	150	-2	450	-2	AG	1456	.9	.0	10.5
Q. NL	0	0	2	-150	AG	340	1.2	.0	9.9
R. SL	0	0	-2	150	AG	150	1.2	.0	9.9
S. WL	0	0	150	2	AG	604	1.3	.0	9.9
T. EL	0	0	-150	-2	AG	154	1.2	.0	9.9

III. RECEPTOR LOCATIONS

RECEPTOR	COORDINATES (M) X	Y	Z
1. NE3	8	8	1.8
2. SE3	8	-8	1.8
3. SW3	-8	-8	1.8
4. NW3	-8	8	1.8

IV. MODEL RESULTS (WORST CASE WIND ANGLE)

RECEPTOR	BRG (DEG)	PRED CONC (PPM)	CONC/LINK (PPM) A	B	C	D	E	F	G	H
1. NE3	185.	.9	.0	.4	.0	.0	.0	.0	.2	.0
2. SE3	275.	.8	.0	.1	.0	.0	.0	.0	.1	.0
3. SW3	85.	1.0	.0	.0	.0	.0	.0	.0	.1	.0
4. NW3	175.	.9	.0	.2	.0	.0	.0	.0	.4	.0

RECEPTOR	CONC/LINK (PPM) I	J	K	L	M	N	O	P	Q	R	S	T
1. NE3	.0	.0	.0	.0	.0	.0	.0	.0	.0	.0	.0	.0
2. SE3	.0	.0	.1	.0	.0	.3	.0	.0	.0	.0	.0	.0
3. SW3	.0	.1	.0	.0	.0	.0	.3	.0	.0	.0	.1	.0
4. NW3	.0	.0	.0	.0	.0	.0	.0	.0	.0	.0	.0	.0

CALINE4: CALIFORNIA LINE SOURCE DISPERSION MODEL
JUNE 1989 VERSION
PAGE 1

JOB: LINDA VISTA RD AND GENESEE AVE PMNP
RUN: Hour 1 (WORST CASE ANGLE)
POLLUTANT: Carbon Monoxide

I. SITE VARIABLES

U= .5 M/S Z0= 100. CM ALT= 0. (M)
BRG= WORST CASE VD= .0 CM/S
CLAS= 7 (G) VS= .0 CM/S
MIXH= 1000. M AMB= .0 PPM
SIGTH= 5. DEGREES TEMP= 15.6 DEGREE (C)

II. LINK VARIABLES

LINK DESCRIPTION	LINK COORDINATES (M) X1	Y1	X2	Y2	TYPE	VPH	EF (G/MI)	H (M)	W (M)
A. NF	2	-450	2	-150	AG	1535	.9	.0	10.5
B. NA	2	-150	2	0	AG	1254	1.5	.0	9.9
C. ND	2	0	2	150	AG	891	1.3	.0	9.9
D. NE	2	150	2	450	AG	891	.9	.0	10.5
E. SF	-2	450	-2	150	AG	1094	.9	.0	10.5
F. SA	-2	150	-2	0	AG	929	1.5	.0	9.9
G. SD	-2	0	-2	-150	AG	2071	1.4	.0	9.9
H. SE	-2	-150	-2	-450	AG	2071	.9	.0	10.5
I. WF	450	2	150	2	AG	1849	.9	.0	10.5
J. WA	150	2	0	2	AG	1038	1.5	.0	9.9
K. WD	0	2	-150	2	AG	1258	1.3	.0	9.9
L. WE	-150	2	-450	2	AG	1258	.9	.0	10.5
M. EF	-450	-2	-150	-2	AG	1189	.9	.0	10.5
N. EA	-150	-2	0	-2	AG	1081	1.5	.0	9.9
O. ED	0	-2	150	-2	AG	1447	1.3	.0	9.9
P. EE	150	-2	450	-2	AG	1447	.9	.0	10.5
Q. NL	0	0	2	-150	AG	281	1.2	.0	9.9
R. SL	0	0	-2	150	AG	165	1.2	.0	9.9
S. WL	0	0	150	2	AG	811	1.4	.0	9.9
T. EL	0	0	-150	-2	AG	108	1.2	.0	9.9

III. RECEPTOR LOCATIONS

RECEPTOR	COORDINATES (M) X	Y	Z
1. NE3	8	8	1.8
2. SE3	8	-8	1.8
3. SW3	-8	-8	1.8
4. NW3	-8	8	1.8

IV. MODEL RESULTS (WORST CASE WIND ANGLE)

RECEPTOR	BRG (DEG)	PRED CONC (PPM)	CONC/LINK (PPM) A	B	C	D	E	F	G	H
1. NE3	185.	1.0	.0	.4	.0	.0	.0	.0	.2	.0
2. SE3	275.	.9	.0	.1	.0	.0	.0	.0	.1	.0
3. SW3	85.	1.1	.0	.0	.0	.0	.0	.0	.2	.0
4. NW3	175.	1.0	.0	.2	.0	.0	.0	.0	.5	.0

RECEPTOR	CONC/LINK (PPM) I	J	K	L	M	N	O	P	Q	R	S	T
1. NE3	.0	.1	.0	.0	.0	.0	.0	.0	.0	.0	.0	.0
2. SE3	.0	.0	.1	.0	.0	.3	.0	.0	.0	.0	.0	.0
3. SW3	.0	.1	.0	.0	.0	.0	.3	.0	.0	.0	.1	.0
4. NW3	.0	.0	.1	.0	.0	.0	.0	.0	.0	.0	.0	.0

CALINE4: CALIFORNIA LINE SOURCE DISPERSION MODEL
JUNE 1989 VERSION
PAGE 1

JOB: LINDA VISTA RD AND GENESEE AVE PMWP
RUN: Hour 1 (WORST CASE ANGLE)
POLLUTANT: Carbon Monoxide

I. SITE VARIABLES

U= .5 M/S Z0= 100. CM ALT= 0. (M)
BRG= WORST CASE VD= .0 CM/S
CLAS= 7 (G) VS= .0 CM/S
MIXH= 1000. M AMB= .0 PPM
SIGTH= 5. DEGREES TEMP= 15.6 DEGREE (C)

II. LINK VARIABLES

LINK DESCRIPTION	LINK COORDINATES (M) X1	Y1	X2	Y2	TYPE	VPH	EF (G/MI)	H (M)	W (M)
A. NF	2	-450	2	-150	AG	1599	.9	.0	10.5
B. NA	2	-150	2	0	AG	1305	1.5	.0	9.9
C. ND	2	0	2	150	AG	914	1.3	.0	9.9
D. NE	2	150	2	450	AG	914	.9	.0	10.5
E. SF	-2	450	-2	150	AG	1110	.9	.0	10.5
F. SA	-2	150	-2	0	AG	945	1.5	.0	9.9
G. SD	-2	0	-2	-150	AG	2114	1.4	.0	9.9
H. SE	-2	-150	-2	-450	AG	2114	.9	.0	10.5
I. WF	450	2	150	2	AG	1867	.9	.0	10.5
J. WA	150	2	0	2	AG	1038	1.5	.0	9.9
K. WD	0	2	-150	2	AG	1271	1.3	.0	9.9
L. WE	-150	2	-450	2	AG	1271	.9	.0	10.5
M. EF	-450	-2	-150	-2	AG	1198	.9	.0	10.5
N. EA	-150	-2	0	-2	AG	1090	1.5	.0	9.9
O. ED	0	-2	150	-2	AG	1475	1.3	.0	9.9
P. EE	150	-2	450	-2	AG	1475	.9	.0	10.5
Q. NL	0	0	2	-150	AG	294	1.2	.0	9.9
R. SL	0	0	-2	150	AG	165	1.2	.0	9.9
S. WL	0	0	150	2	AG	829	1.4	.0	9.9
T. EL	0	0	-150	-2	AG	108	1.2	.0	9.9

III. RECEPTOR LOCATIONS

RECEPTOR	COORDINATES (M) X	Y	Z
1. NE3	8	8	1.8
2. SE3	8	-8	1.8
3. SW3	-8	-8	1.8
4. NW3	-8	8	1.8

IV. MODEL RESULTS (WORST CASE WIND ANGLE)

RECEPTOR	BRG (DEG)	PRED CONC (PPM)	CONC/LINK (PPM) A	B	C	D	E	F	G	H
1. NE3	185.	1.0	.0	.4	.0	.0	.0	.0	.2	.0
2. SE3	275.	.9	.0	.1	.0	.0	.0	.0	.2	.0
3. SW3	85.	1.1	.0	.1	.0	.0	.0	.0	.2	.0
4. NW3	175.	1.1	.0	.2	.0	.0	.0	.0	.5	.0

RECEPTOR	CONC/LINK (PPM) I	J	K	L	M	N	O	P	Q	R	S	T
1. NE3	.0	.1	.0	.0	.0	.0	.1	.0	.0	.0	.0	.0
2. SE3	.0	.0	.1	.0	.0	.3	.0	.0	.0	.0	.0	.0
3. SW3	.0	.1	.0	.0	.0	.0	.3	.0	.0	.0	.1	.0
4. NW3	.0	.0	.1	.0	.0	.0	.0	.0	.0	.0	.0	.0