THE CITY OF SAN DIEGO

M E M O R A N D U M

DATE: February 24, 2014

TO: Distribution

FROM: James Nagelvoort, City Engineer

SUBJECT: Clarifying Requirements for Resurfacing Excavations not Covered by the Moratorium (San Diego Municipal Code §§ 62.1210 and 62.1216)

Background

The Street Preservation Ordinance (SPO), San Diego Municipal Code (SDMC) section 62.1201, et.al, became effective on February 1, 2013. The purpose of this SPO is to provide policies and procedures to minimize damage to public infrastructure, to ensure public safety and to establish cost recovery mechanisms for all costs to the City resulting from excavations in the public right-of-way (ROW). Since implementation of the SPO, questions have been raised regarding the requirements on street repairs after excavation work and calculation of street damage fee (SDF). This memo is to clarify these issues as discussed below:

I. **Resurfacing/Restoration of the Public ROW Not Under the Moratorium** - The overall intent of the SPO is to restore the surface pavement to its original condition prior to excavation work (pre-existing surface condition) and recover diminished lifecycle costs. However, two sections of the SPO regarding the resurfacing work after the moratorium conflict with each other as discussed below:

   a. SDMC section 62.1210 requires the excavator to resurface the entire length of the excavation area and the excavation influence area extending distances around the perimeter of the excavation.

   b. SDMC section 62.1216 requires the excavator to restore the excavation in the manner prescribed by the City Standard Drawings and specifications of the City or any applicable permits.

Conflict: SDMC Section 62.1216 requires that the surface pavement shall be restored in accordance with the attached City Standard Drawings SDG-107 and SDG-117 that show resurfacing extending 6 inches around the perimeter of the excavation and in accordance with standard specifications (Whitebook Section 302). This contradicts SDMC section 62.1210 that requires resurfacing a wider excavation influence area extending more than 6-inches as required in SDG-107 and SDG-117.

Resolution: To restore the surface pavement to its original condition for excavations not under an excavation moratorium, the surface pavement restoration work for wet and dry utilities as discussed below are deemed proper methodology:

A. For Wet Utilities (including but not limited to water main and services, reclaimed water main and services, sewer main and laterals, storm drains and fire hydrants):

   1. Restoration of surface pavement shall be performed in accordance with the attached City Standard Drawing SDG-107 that shows resurfacing extending 6 inches around the perimeter of the excavation.

   2. Slurry seal from curb to curb or nearest raised median is required. These excavations include but not limited to installations of 6-inch or larger wet utilities, multiple services and laterals on both sides of the ROW (trench excavations perpendicular to the direction of the traffic), and other appurtenances such as manholes and vaults.

   3. The Field Division Deputy City Engineer (DCE) or his/her representative shall have the authority to direct additional pavement repairs prior to slurry work. This may include increased damages to surface pavement due to the use of large or heavy trucks and equipments during construction activities. The purpose of the additional pavement repairs is to restore the surface pavement to its original condition and to ensure public safety.

B. For Dry Utilities (including but not limited to gas, electric, cable, telephones, fiber optic, traffic signals, street lights and television lines):

   1. Restoration of surface pavement shall be performed in accordance with the attached City Standard Drawing SDG-117 that shows resurfacing extending 6 inches around the perimeter of the excavation.

   2. The Field Division DCE or his/her representative shall have the authority to direct additional pavement repairs. This may include increased damages to surface pavement due to the use of large or heavy trucks and equipments during construction

activities. The purpose of the additional pavement repairs is to restore the surface pavement to its original condition and to ensure public safety.

For excavations on streets under an excavation moratorium due to reconstruction or resurfacing (per SPO section 62.1208) or due to slurry seal (per SPO section 62.1209), the City Engineer or his/her DCE representative may impose additional requirements to restore the surface pavement to its original condition prior to approval of an excavation moratorium waiver.

II. **SDF Calculation -** SDMC section 62.1215 requires the excavator to pay the City a SDF to partially recover the increased repaving and reconstruction costs incurred by the City due to the impact of the excavation to the public ROW. The fee includes the amount necessary to recover the estimated costs to reconstruct, slurry seal and resurface to fully mitigate the damage and degradation caused by the excavation.

The SDF is calculated by using factors such as the excavation area including the excavation influence area, and the index of resurfacing costs based on the street classification (arterial, major, collector or residential), utility type (wet or dry utility) and pavement age group (age of last resurfacing). The area utilized to calculate the SDF includes the excavation area plus the excavation influence area as listed in the table in SDMC sections 62.1208, 62.1209 and 62.1210.

James Nagelvoort, PE
City Engineer

Attachments: Copy of Street Preservation Ordinance O-2013-51
City Standard Drawings SDG-107 and SDG-117

Distribution: Tony Heinrichs, Deputy Chief Operating Officer, Public Works/Infrastructure
Robert Vacchi, Development Services Director
Kip Sturdevan, Transportation and Storm Water Director
Halla Razak, Public Utilities Director
Marnell Gibson, PW - Right-of-Way Design Division Deputy Director
Darren Greenhalgh, PW - Project Implementation Division Deputy Director
Mark Nassar, PW - Architectural, Engineering and Parks Division Deputy Director
Dave Zoumaras, PW - ECP Field Engineering Division Deputy Director

Article 2: Public Right–of–Way and Land Development

Division 12: Excavations in the *Public Right-of-Way*

("Excavation Fees" added 9-22-2003 by O-19215 N.S.)
(Retitled to "Excavations in the Public Right-of-Way" and amended 1-2-2013 by O-20231 N.S.)

§62.1201 Purpose

This Division shall govern excavation in the *public right-of-way* within the City. Excavations degrade and shorten the life of the sidewalks, roads and *facilities* within the *public right-of-way*. The purpose of this Division is to provide policies and procedures to facilitate excavation in the *public right-of-way*, while minimizing damage to public infrastructure and ensuring public safety. It is the further purpose of this Division to establish cost recovery mechanisms for all costs to the City resulting from excavations in the *public right-of-way*.
("Findings and Purpose" added 9–22–2003 by O–19215 N.S.)
(Retitled to "Purpose" and amended 1-2-2013 by O-20231 N.S.; effective 2-1-2013.)

§62.1202 Departmental Orders and Regulations

The *City Engineer* may adopt such orders or regulations necessary to implement this Division and to preserve and maintain the public health, safety, welfare, and utility of the *public right-of-way*. Each excavation in the *public right-of-way* shall be performed in accordance with *City Standard Plans*, specifications, orders, and regulations, unless the *City Engineer*, in his or her discretion, grants prior written approval to deviate from any such standard plans, specifications, orders, or regulations. The *City Engineer* shall develop and maintain guidelines to implement the approval of any deviations and shall document such deviations.
("Definitions" added 9–22–2003 by O–19215 N.S.)
(Retitled to "Departmental Orders and Regulations" and amended 1-2-2013 by O-20231 N.S.; effective 2-1-2013.)

§62.1203 Definitions

For purposes of this Division, the definitions in Section 62.1102 apply. In addition, the following definitions apply:

Excavation Influence Area means the area that is impacted by the excavation as determined by the *City Engineer*.

Excavator means a person or party excavating within the *public right-of-way.*

Facility Owner means the *Public Utility* or other person that owns, controls, or is otherwise responsible for a *Facility* or *Facilities* within *the public right-of-way.*

Hazardous Material means any gas, material substance, or waste which, because of its quantity, concentration or physical or chemical characteristics, is deemed by any federal, state or local governmental authority to pose a present or potential hazard to human health or safety to the environment.

Moratorium Street means any street, or portion thereof, that has been reconstructed or resurfaced in the preceding five year period or slurry sealed in the preceding three year period.

Municipal Excavator means any agency, board, commission, department, or subdivision of the City that owns, installs, or maintains a *facility* or *facilities* in the *public right-of-way.*

Non-Linear Excavation means an excavation of no more than eighteen inches (18") around substructures required to access existing *facility*, such as a manhole or vault.

Public right-of-way means public easements or public property that are or may be used for streets, alleys, or other public purpose.

Public Utility means *wet utilities* and *dry utilities* which provide service for, or the commodity is delivered to, the public or any portion thereof. It also includes any City Department and utilities defined in California Public Utilities Code Section 216. It includes their agents, assigns, successors, contractors, subcontractors, employees or representatives.

Trenchless Technology means any method, material, equipment, technique, or combination thereof that can be used to install, replace, renew or repair underground infrastructure with minimal surface disturbance. *Trenchless Technology* includes drilling, auguring, boring and tunneling.

("Three Year Moratorium on Resurfaced Public Rights-of-Way" added 9–22–2003 by O–19215 N.S.)
(Retitled to "Definitions" and amended 1-2-2013 by O-20231 N.S.; effective 2-1-2013.)

§62.1204 Coordination of Excavation

Public utilities shall coordinate planned infrastructure projects to minimize the damage to the *public right-of-way* caused by multiple excavations in the same area, by providing the City with a two-year plan for work they anticipate in the *public right-of-way*.

(a) On April 1 and October 1 of each year, or on the first business day immediately thereafter, each *public utility* shall prepare and submit to the City a plan that shows all major work anticipated to be done in the *public right-of-way* in the next 24 months. Any *public utility* that does not propose major work in the next 24 months shall submit a statement that no such major work is anticipated and shall immediately report any major work to the City as soon as it becomes reasonably foreseeable.

(b) To the extent permissible by law, including but not limited to the California Public Records Act, the City shall not disclose to third parties proprietary, trade secret, or otherwise confidential information that is provided to the City by a *public utility* beyond what is necessary to facilitate coordination among *excavators* and to avoid unnecessary excavation of the *public right-of-way*. Any information provided to the City that a *public utility* deems proprietary, trade secret, or confidential must be clearly marked and identified as such. The *public utility* must also provide a specific and detailed legal basis establishing why the information is exempt from public disclosure. If the *public utility* fails to properly mark or identify proprietary, trade secret, or confidential information or provide the specific legal basis for non-disclosure, the City may release such information to the public.

(c) *Public utilities* shall indemnify, defend, protect and hold harmless the City, including its departments, officers, agents and employees, from and against, any and all actions, claims, costs, damages, demands, expenses, fines, injuries, judgments, liabilities, losses, penalties, or suits arising from the City's non-disclosure of information deemed by a *public utility* as proprietary, trade secret, or confidential.

("Moratorium on Slurried Public Rights-of-Way" added 9–22–2003 by O–19215 N.S.)
(Retitled to "Coordination of Excavation" and amended 1-2-2013 by O-20231 N.S.; effective 2-1-2013.)

§62.1205 Duration of a *Public Right-of-Way Permit* to Excavate Within a Public Street

It shall be unlawful for any person or *public utility* to excavate within the roadway section of a street in the *public right-of-way* without a valid *Public Right-of-Way Permit* under Section 129.0702. Notwithstanding Chapter 12, Article 9, Division 7, Section 129.0743 and Section 129.0744, a *Public Right-of-Way Permit* to excavate within the roadway section of a public street shall be void if the excavation has not begun within ninety calendar days of the start date specified in the permit, if the excavation is not pursued diligently to its conclusion, or if the excavation and restoration has not been completed within one calendar year from the permit issuance.

("Excavation Fee" added 9–22–2003 by O–19215 N.S.)
(Retitled to "Duration of a Public Right-of-Way Permit to Excavate Within a Public Street " and amended 1-2-2013 by O-20231 N.S.; effective 2-1-2013.)

§62.1206 Moratorium Streets

Excavations shall not be permitted in a *moratorium street* without a valid moratorium waiver.
("Resurface Agreement" added 9–22–2003 by O–19215 N.S.)
(Retitled to "Moratorium Streets" and amended 1-2-2013 by O-20231 N.S.; effective 2-1-2013.)

§62.1207 Excavation Moratorium Waivers

The *City Engineer* may upon written request grant an excavation moratorium waiver. The *City Engineer* may place additional conditions on a *Public Right-of-Way Permit* subject to an excavation moratorium waiver. The *City Engineer* may approve or conditionally approve an excavation moratorium waiver only if the *City Engineer* makes a written finding that one or more of the following grounds are present:

(a) A bona fide emergency exists that

(1) endangers the health and safety or property of the citizenry; and

(2) requires excavation in order to remediate the emergency

(b) New Service to a specific location cannot be provided either:

(1) through existing conduit;

(2) where *trenchless technology* is impractical due to one or more of the following:

(A) soil conditions;

(B) proximity of *facilities*;

(C) where *trenchless technology* is economically impractical compared to trenching and resurfacing performed in accordance with approved standards; or

(3) the *public utility* demonstrates to the *City Engineer's* satisfaction that the service cannot be provided from another location.

(c) The installation or relocation of facilities by a non-government owned *public utility* is both:

(1) required by the City, County, State or Federal Government; and

(2) not required as a result of an underground utility district established pursuant to Section 61.0501.

(d) Only a *non-linear excavation* or *exploratory excavation* will be made. The *City Engineer* in his or her sole discretion may authorize an *exploratory excavation* with an area not to exceed five feet by five feet. Such authorization must be made in writing and signed by the *City Engineer*.

("Excavation Warranty" added 9–22–2003 by O–19215 N.S.)
(Retitled to "Excavation Moratorium Waivers" and amended 1-2-2013 by O-20231 N.S.; effective 2-1-2013.)

§62.1208 Excavations on Streets Under an Excavation Moratorium Due to Reconstruction or Resurfacing

Excavation approved with an excavation moratorium waiver under Section §62.1207, to occur on streets that were reconstructed or resurfaced within five years prior to the application for an excavation moratorium waiver, shall be resurfaced as directed by the *City Engineer* and in accordance with the following:

(a) Where the excavation is in the direction of traffic, the *excavator* shall resurface the entire length of the excavation area, the *excavation influence area* on each end of the excavation area, and the entire width of the street from curb to curb, or where a raised median is present the *excavator* shall resurface from the curb-line to the raised median.

(b) Where the excavation is perpendicular to the direction of traffic, the *excavator* shall resurface the length of the excavation from curb to curb, or for the length of the excavation plus the *excavation influence area* extending on each end of the excavation, whichever is less. This resurface shall include the excavation area plus the *excavation influence area* on each side of the excavation.

(c) Where a raised median is present and the excavation is perpendicular to the direction of traffic, the *excavator* shall resurface either from the raised median to the curb or for the length of the excavation plus the *excavation influence area* extending on each end of the excavation, whichever is less. The *excavator* shall also resurface the excavation plus the *excavation influence* area on each side of the excavation.

The *excavation influence area* extends around the perimeter of the excavation as follows:

Street Classification	Wet Utilities	Dry Utilities
Arterial Streets	62 inches	51 inches
Major Streets	71 inches	55 inches
Collector Streets	82 inches	43 inches
Residential Streets	74 inches	46 inches

("Resurfacing Public Rights-of-Way" added 9–22–2003 by O–19215 N.S.) (Retitled to "Excavations on Streets Under an Excavation Moratorium Due to Reconstruction or Resurfacing" and amended 1-2-2013 by O-20231 N.S.; effective 2-1-2013.)

§62.1209 Excavations on Streets Under a Excavation Moratorium Due to Slurry Seal

Excavations approved with an excavation moratorium waiver under Section §62.1207, on streets that had been slurry sealed within three years prior to the application for an excavation moratorium waiver, shall be slurry sealed as directed by the *City Engineer* and in accordance with the following:

(a) Where the excavation is in the direction of traffic, the *excavator* shall slurry seal the entire length of the excavation area, the *excavation influence area* on each end of the excavation area, and the entire width of the street from curb-line to curb-line, or where a raised median is present the *excavator* shall resurface from the curb-line to the median.

(b) Where the excavation is perpendicular to the direction of traffic, the *excavator* shall slurry seal the length of the excavation from curb-line to curb-line, or for the length of the excavation plus the *excavation influence area* extending on each end of the excavation, whichever is less. The *excavator* shall also slurry seal the excavation area plus the *excavation influence area* on each side of the excavation.

(c) Where a raised median is present and the excavation is perpendicular to the direction of traffic, the *excavator* shall slurry seal either from the raised median to the curb-line, or for the length of the excavation plus the *excavation influence area* extending on each end of the excavation, whichever is less. The *excavator* shall also slurry seal the excavation plus the *excavation influence area* on each side of the excavation.

The *excavation influence area* extends around the perimeter of the excavation as follows:

Street Classification	Wet Utilities	Dry Utilities
Arterial Streets	62 inches	51 inches
Major Streets	71 inches	55 inches
Collector Streets	82 inches	43 inches
Residential Streets	74 inches	46 inches

("Repair of City Excavation" added 9–22–2003 by O–19215 N.S.)
(Retitled to "Excavations on Streets Under a Excavation Moratorium Due to Slurry Seal" and amended 1-2-2013 by O-20231 N.S.; effective 2-1-2013.)

§62.1210 Excavations Not Under an Excavation Moratorium

Resurfacing shall include the *excavation influence area* extending the following distances around the perimeter of the Excavation:

Street Classification	Wet Utilities	Dry Utilities
Arterial Streets	62 inches	51 inches
Major Streets	71 inches	55 inches
Collector Streets	82 inches	43 inches
Residential Streets	74 inches	46 inches

(1) Where the excavation is in the direction of the traffic, the *excavator* shall resurface the entire length of the excavation area, the *excavation influence area* on each end of the excavation area, and the entire width of the excavation area, and the *excavation influence area* extending from each transverse side of the excavation area.

(2) Where the excavation is perpendicular to the direction of traffic, the *excavator* shall resurface the length of the excavation from curb-line to curb-line, or for the length of the excavation and the *excavation influence area* extending on each end of the excavation, whichever is less. This resurface also shall include the excavation area and the *excavation influence area* on each side of the excavation along the axis of the street.

(3) Where a raised median is present and the excavation is perpendicular to the direction of traffic, the *excavator* shall resurface either from the raised median to the curb-line, or for the length of the excavation and the *excavation influence area* extending on each end of the excavation, whichever is less. This resurface also shall include the excavation plus the *excavation influence area* on each side of the excavation along the axis of the street.

("Establishment of Fund" added 9–22–2003 by O–19215 N.S.)
(Amended 11-14-2005 by O-19440 N.S.)
(Retitled to "Excavations Not Under an Excavation Moratorium" and amended 1-2-2013 by O-20231 N.S.; effective 2-1-2013.)

§62.1211 Emergency Excavation

Nothing contained in this Division shall be construed to prevent any *public utility* from taking the minimum actions necessary for the preservation of life or property or for the restoration of essential service provided by a *public utility* when such necessity arises when City offices are closed. In the event that any person or *public utility* takes any action to excavate, or causes to be excavated the *public right-of-way* pursuant to this Section, such person shall notify the City's 24 hour Public Works Dispatch Center prior to excavation and then apply for a *Public Right-of-Way Permit* under Section 129.0702, no later than fourteen business days after excavation. The applicant for a *Public Right-of-Way Permit* under Section 129.0702, shall submit a written statement on the basis of the emergency action and describe the excavation performed and any work remaining to be performed. A *Public Right-of-Way Permit* under Section 129.0702 shall not be valid until a final inspection of the excavation is performed and approved by the City.
("Strict Compliance with Division Required" added 9–22–2003 by O–19215 N.S.) (Retitled to "Emergency Excavation" and amended 1-2-2013 by O-20231 N.S.; effective 2-1-2013.)

§62.1212 Excavation and Trench Liability

Each *facility owner* is responsible for the quality of the excavation performed in the *public right-of-way* and is liable for the consequences of any condition of such excavation and any *facilities* installed in the *public right-of- way*. The issuance of any permit, inspection, repair or suggestion, approval or acquiescence of any person affiliated with the City shall not excuse any owner or agent from such responsibility or liability.
("Excavation and Trench Liability" added 1-2-2013 by O-20231 N.S.; effective 2-1-2013.)

§62.1213 Indemnification of the City

To the extent permissible by law, the City may require *excavators*, their agents, successors, and assigns, to indemnify, defend, protect and hold harmless the City, including, without limitation, each of its commissions, departments, officers, agents and employees from and against any and all actions, claims, costs, damages, demands, expenses, fines, injuries, judgments, liabilities, losses, penalties, or suits including, without limitation, attorney's fees and costs (collectively, "claims") of any kind allegedly arising directly or indirectly from:

(a) Any act of omission or negligence by an *excavator*, its agents, contractors, subcontractors, or the officers, agents or employees of such entities, while engaged in the performance of the excavation authorized by the *Public Right-of-Way Permit*, or while in or about the property subject to the *Public Right-of-Way Permit* for any reason connected in any way whatsoever with the performance of the excavation authorized by the *Public Right-of-Way Permit* or allegedly resulting directly or indirectly from the maintenance or installation of any equipment, *facility* or structures authorized under the *Public Right-of-Way Permit*;

(b) Any accident, damage, death or injury to any *excavator* or its contractor or subcontractor, or any officer, agent or employee of either of them, while engaged in the performance of the excavation authorized by the *Public Right-of-Way Permit* or while in or about the property for any reason connected with the performance of the excavation authorized by the *Public Right-of-Way Permit* or arising from liens or claims for services rendered or labor or materials furnished in or for the performance of the excavation authorized by the *Public Right-of-Way Permit*;

(c) Any accident, damage, death or injury to any persons or accident, damage or injury to any real or personal property upon, or in any way allegedly connected with the excavation authorized by the *Public Right-of-Way Permit* from any cause or claims arising at any time; and

(d) Any release or discharge, or threatened release or discharge, of any *hazardous material* caused or allowed by permittee about, in, on, or under the excavation site subject to the *Public Right-of-Way Permit*.

("Indemnification of the City" added 1-2-2013 by O-20231 N.S.; effective 2-1-2013.)

§62.1214 Insurance Requirements For Excavations in the *Public-Right-of-Way*

To the extent permissible by law, *excavators* shall maintain in full force and effect, throughout the term of the *Public Right-of-Way Permit*, an insurance policy or policies issued by an insurance company or companies covering all operations, vehicles, and employees as follows:

(a) Commercial general liability insurance with a combined single limit of not less than $1,000,000 per occurrence for bodily injury and property damage, including contractual liability; personal injury; explosion, collapse and underground products; and completed operations;

(b) Contractors pollution liability insurance, on an occurrence form, with a combined single limit of not less than $1,000,000 per occurrence for bodily injury and property damage and any deductible not to exceed $25,000 per occurrence.

(c) Should any of the required insurance be provided under a claims-made form, the insured owner or its agent shall maintain such coverage continuously throughout the term of the permit, and without lapse, for a period of three years beyond the expiration or termination of the *Public Right-of-Way Permit*, to the effect that should occurrences during the term of the permit give rise to claims made after expiration or termination of the permit, such claims shall be covered by such claims-made policies.

(d) Should any of the required insurance be provided under a form of coverage that includes a general annual aggregate limit or provides that claims investigation or legal defense costs be included in such general annual aggregate limit, such general aggregate limit shall be double the occurrence or claims limits specified in Sections §62.1214(a) and §62.1214(b).

(e) Certificates of insurance, in the form satisfactory to the City, evidencing all coverage described above, shall be furnished to the City before issuance of a permit, with complete copies of policies furnished promptly upon the City's request.

(f) Where an *excavator* is self-insured, the City may accept such self-insurance as satisfying the requirements of Section §62.1214, where the *excavator* evidences to the City such guarantee via a bond or other form of surety, no less broad and affording protection equivalent to the City as the requirements specified above.

("Insurance Requirements For Excavations in the Public-Right-of-Way" added 1-2-2013 by O-20231 N.S.; effective 2-1-2013.)

§62.1215 Street Damage Fee

Each *excavator* shall pay to the City a Street Damage Fee to recover the increased repaving and reconstruction costs incurred by the City that are reasonably attributable to the impact of the excavation to the *public right-of-way*. The amount of the Street Damage Fee shall be established by resolution of the San Diego City Council adopted pursuant to this Division and placed on file in the Office of the City Clerk. The Street Damage Fee shall not exceed an amount reasonably necessary to recover the estimated costs, including but not limited to all administration, investigation, inspection, monitoring, reconstruction, slurry seal and resurfacing necessary to fully mitigate the damage and degradation caused by the excavations. The fee shall be the amount in effect on the date of issuance of a *Public Right-of-Way Permit*, or for *Municipal Excavator*s the amount in effect on the date of commencement of the excavation.
("Street Damage Fee" added 1-2-2013 by O-20231 N.S.; effective 2-1-2013.)

§62.1216 Restoration of the *Public Right-of-Way*

In any case in which the sidewalk, street, or other *public right-of-way* is to be excavated, the *excavator* shall restore or cause to be restored such excavation in the manner prescribed by the order, regulations, and *City Standard Drawings* and specifications of the City or any applicable permits.

("Restoration of the Public Right-of-Way" added 1-2-2013 by O-20231 N.S.; effective 2-1-2013.)

§62.1217 Repair and Maintenance Obligation of Facility Owner

Facility owners of *wet utilities* shall maintain, repair, or reconstruct the site of any excavation and the surface condition per *City Standard Drawings* or as specified by the *City Engineer* for fifteen years after inspection and acceptance by the City. *Facility owners* of *dry utilities* shall maintain, repair, or reconstruct the site of any excavation and the surface condition per *City Standard Drawings* or as specified by the *City Engineer* for ten years after inspection and acceptance by the City.
("Repair and Maintenance Obligation of Facility Owner" added 1-2-2013 by O-20231 N.S.; effective 2-1-2013.)

§62.1218 Excavation Site Requirements

It shall be unlawful, with the exception of *municipal excavators*, to excavate in violation of the following requirements:

(a) *Excavators* shall have the *Public Right-of-Way Permit*, or a true or legible copy, and any required Traffic Control Permit available for inspection at the site of excavation.

(b) *Excavators* shall not excavate without providing proper notice to the *Underground Service Alert* in accordance with Section §62.1105.

(c) Excavations shall not exceed the scope of excavation described within the *Public Right-of-Way Permit* without the prior written approval of the *City Engineer*.

("Excavation Site Requirements" added 1-2-2013 by O-20231 N.S.; effective 2-1-2013.)

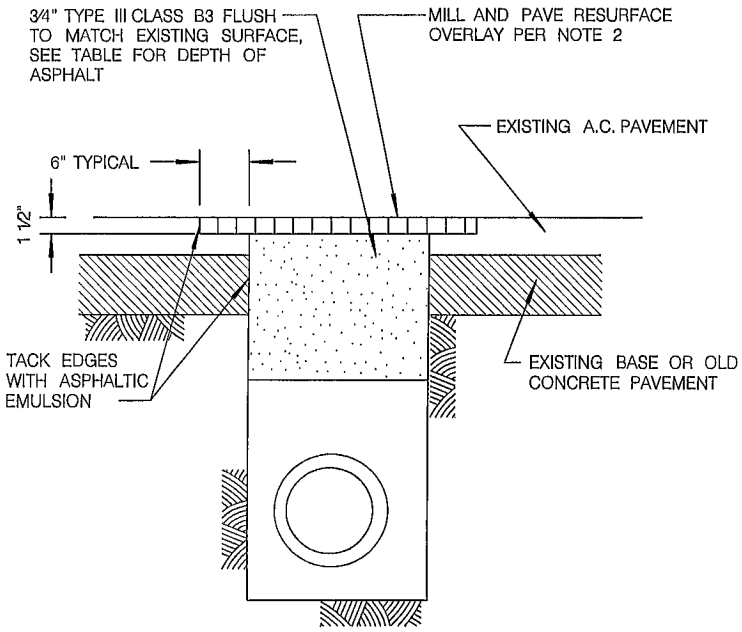

TYPE 1

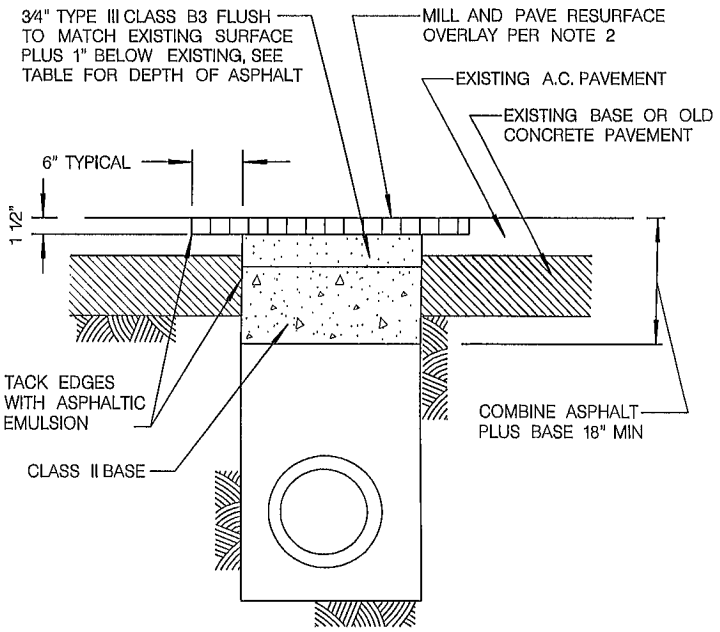

TYPE 2

	TYPE 1	TYPE 2
	ASPHALT	ASPHALT PLUS BASE
MIX DESIGN	3/4" TYPE III CLASS B3	3/4" TYPE III CLASS B3 PLUS CLASS II BASE
ALLEYS	8.0"	ASPHALT THICKNESS TO EQUAL
LOCAL THROUGH 4 LANE COLLECTORS	10.0"	EXISTING PLUS 1", MIN 4" TO MAX. 9".
MAJOR	12.0"	COMBINED ASPHALT PLUS BASE 18" MIN.

NOTES:

1. ANY STREET TRENCH 7 FEET IN WIDTH OR GREATER AND LONGER THAN 100 FEET IN OVERALL LENGTH SHALL BE RECONSTRUCTED WITH THE PAVEMENT SECTION FOR THE STREET CLASSIFICATION PER SCHEDULE "J" (SDG-113).
2. ASPHALT TRENCH CAPS IN STREETS NOT RECEIVING A FULL WIDTH OVERLAY PRIOR TO ACCEPTANCE SHALL BE MILLED AS SHOWN AND RESURFACED WITH 1/2" TYPE III CLASS C2 ASPHALT NO LESS THAN 30 DAYS AFTER INITIAL ASPHALT PLACEMENT.
3. WHEN DIRECTED BY CITY ENGINEER OR SHOWN ON THE PLANS, CONCRETE PER SDG-108 (NOTE #5) MAY BE PLACED; A 1/8" – 1/4" WEARING SURFACING OF TYPE III CLASS F ASPHALT CONCRETE WILL BE REQUIRED.

REVISION	BY	APPROVED	DATE
ORIGINAL		J.P. CASEY	1/24/89
UPDATED	KA	J. NAGELVOORT	01/12
UPDATED	KA	J. NAGELVOORT	4/13
UPDATED	BB	J. NAGELVOORT	1/14

CITY OF SAN DIEGO – STANDARD DRAWING

TRENCH RESURFACING FOR ASPHALT CONCRETE SURFACED STREETS

RECOMMENDED BY THE CITY OF SAN DIEGO STANDARDS COMMITTEE

COORDINATOR R.C.E. 3523 1/30/14 DATE

DRAWING NUMBER **SDG-107**

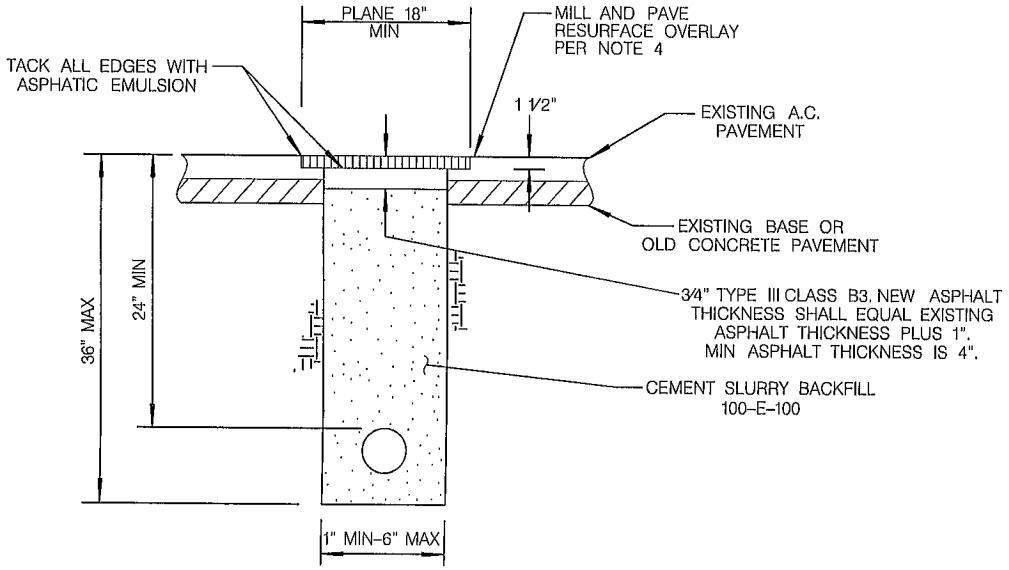

NOTES:

1. CEMENT SLURRY BACKFILL SHALL BE THOROUGHLY CONSOLIDATED, HAVE A MAXIMUM SLUMP OF 4 INCHES, AND MAY CONTAIN 30% MAXIMUM 3/8" ROCK.

2. BALL DROP TEST PER ASTM D 6024 SHALL BE PERFORMED ON SLURRY AND ACHIEVE A MAXIMUM INDENTATION DIAMETER OF 3 INCHES PRIOR TO PLACEMENT OF ASPHALT CONCRETE.

3. CUTS SHALL BE STRAIGHT. EXISTING A.C. PAVEMENT WILL NOT REQUIRE SAWCUTTING WHEN USING ROCKWHEEL FOR EXCAVATION.

4. ASPHALT TRENCH CAPS IN STREETS NOT RECEIVING A FULL WIDTH OVERLAY PRIOR TO ACCEPTANCE SHALL BE MILLED AS SHOWN AND RESURFACED WITH 1/2" TYPE III CLASS C2 ASPHALT NO LESS THAN 30 DAYS AFTER INITIAL ASPHALT PLACEMENT.

5. WHEN PCC TRENCH RESURFACING IS DIRECTED BY CITY ENGINEER OR SHOWN ON THE PLANS, 1/8"-1/4" TYPE F ASPHALT WEARING SURFACE IS REQUIRED. SEE SDG-108 (NOTE #5) FOR PCC THICKNESS AND CURING REQUIREMENTS.

6. FOR ELECTRICAL SUPPLY CABLES, SEE CALIFORNIA PUBLIC UTILITY COMMISSION GENERAL ORDER NO. 128, RULE 33.4 CLEARANCES AND DEPTHS.

REVISION	BY	APPROVED	DATE
ORIGINAL		BAHMANIAN	04/86
TITLE BLOCK		A. OSKOUI	12/06
UPDATED	KA	J. NAGELVOORT	01/12
UPDATED	KA	J. NAGELVOORT	04/13
UPDATED	KA	J. NAGELVOORT	01/14

CITY OF SAN DIEGO – STANDARD DRAWING

NARROW TRENCH RESURFACING FOR ASPHALT CONCRETE SURFACE STREETS

RECOMMENDED BY THE CITY OF SAN DIEGO STANDARDS COMMITTEE

COORDINATOR R.C.E. 56523 DATE 1/30/2014

DRAWING NUMBER **SDG-117**