EC Constructors, Inc.
Mrs. Sherri L. Summers, CEO
9834 River Street
Lakeside, CA 92040
P: (619) 440-7181 F: (619) 440-7180

City of San Diego

CONTRACTOR'S NAME: _____
ADDRESS: _____
TELEPHONE NO.: _____ **FAX NO.:** _____
CITY CONTACT: Damian Singleton - Contract Specialist, Email:DSingleton@sandiego.gov
Phone No. (619) 533-3382, Fax No. (619) 533-3633
JSleiman/ Bdoringo/Lad

CONTRACT DOCUMENTS

ORIGINAL

FOR

SOUTH MISSION BEACH LIFEGUARD STATION

VOLUME 1 OF 2

BID NO.: K-15-1180-DBB-3
SAP NO. (WBS/IO/CC): S-00793
CLIENT DEPARTMENT: 1912
COUNCIL DISTRICT: 2
PROJECT TYPE: BB

THIS CONTRACT IS SUBJECT TO THE FOLLOWING:

- THE CITY'S SUBCONTRACTING PARTICIPATION REQUIREMENTS FOR SLBE PROGRAM.
- PREVAILING WAGE RATES: STATE ☒ FEDERAL ☐
- APPRENTICESHIP

BID DUE DATE:

2:00 PM
NOVEMBER 20, 2014
CITY OF SAN DIEGO
PUBLIC WORKS CONTRACTS
1010 SECOND AVENUE, 14th FLOOR, MS 614C
SAN DIEGO, CA 92101

ENGINEER OF WORK

The engineering Specifications and Special Provisions contained herein have been prepared by or under the direction of the following Registered Engineer/Architect:

October 14,2014

1) Registered Engineer/Architect — Date — Seal:

10/14/2014

2) For City Engineer — Date — Seal

TABLE OF CONTENTS

DESCRIPTION **PAGE NUMBER**

NOTICE INVITING BIDS 4

1. CONTRACT FORMS 16
2. CONTRACT FORMS ATTACHMENTS:
    1. Performance Bond and Labor and Materialmen's Bond 20
    2. Drug-Free Workplace 22
    3. American with Disabilities Act (ADA) Compliance Certification 23
    4. Contractor Standards - Pledge of Compliance Certificate 24
    5. Affidavit of Disposal Certificate 25
3. ATTACHMENTS:
    - A. SCOPE OF WORK 27
    - B. INTENTIONALLY LEFT BLANK 30
    - C. EQUAL OPPORTUNITY CONTRACTING PROGRAM 31
    - D. INTENTIONALLY LEFT BLANK 35
    - E. SUPPLEMENTARY SPECIAL PROVISIONS 36

      TECHNICALS 54

      SUPPLEMENTARY SPECIAL PROVISIONS APPENDICES 731

        1. Appendix A - California Development Permit and Site Development Permit 732
        2. Appendix B - Materials Typically Accepted by Certificate of Compliance 760
        3. Appendix C – Sample City Invoice 762
        4. Appendix D – Location Map 764
        5. Appendix E – Adjacent Projects 766
        6. Appendix F – Hazardous Labels/Forms 769
    - F. INTENTIONALLY LEFT BLANK 774

CITY OF SAN DIEGO, CALIFORNIA

NOTICE INVITING BIDS

1. **RECEIPT AND OPENING OF BIDS:** Bids will be received at the Public Works Contracts at the location, time, and date shown on the cover of these specifications for performing work on **South Mission Beach Lifeguard Station** (Project).

2. **SUMMARY OF WORK:** The Work involves furnishing all labor, materials, equipment, services, and other incidental works and appurtenances for the construction of the Project as described in ATTACHMENT A.

3. **BIDS ARE PUBLIC RECORDS:** Upon receipt by the City, Bids shall become public records subject to public disclosure. It is the responsibility of the respondent to clearly identify any confidential, proprietary, trade secret or otherwise legally privileged information contained within the Bid. General references to sections of the California Public Records Act (PRA) will not suffice. If the Contractor does not provide applicable case law that clearly establishes that the requested information is exempt from the disclosure requirements of the PRA, the City shall be free to release the information when required in accordance with the PRA, pursuant to any other applicable law, or by order of any court or government agency, and the Contractor will hold the City harmless for release of this information.

4. **SUBCONTRACTING PARTICIPATION PERCENTAGES:**

4.1. The City has incorporated **mandatory** SLBE-ELBE subcontractor participation percentages to enhance competition and maximize subcontracting opportunities. For the purpose of achieving the mandatory subcontractor participation percentages, a recommended breakdown of the SLBE and ELBE subcontractor participation percentages based upon certified SLBE and ELBE firms has also been provided to achieve the mandatory subcontractor participation percentages:

1. SLBE participation **3.5%**
2. ELBE participation **12.1%**
3. Total mandatory participation **15.6%**

4.2. The Bidders are strongly encouraged to attend the Pre-Bid Meeting to better understand the Good Faith Effort requirements of this contract. See the City's document titled "SLBE Program, Instructions For Bidders Completing The Good Faith Effort Submittal" available at: http://www.sandiego.gov/eoc/

4.3. The Bid will be declared non-responsive if the Bidder fails the following mandatory conditions:

4.3.1. Bidder's inclusion of SLBE-ELBE certified subcontractors at the overall mandatory participation percentage identified in this document; OR.

4.3.2. Bidder's submission of Good Faith Effort documentation demonstrating the Bidder made a good faith effort to outreach to and include SLBE-ELBE

Subcontractors required in this document within **3 Working Days** of the Bid opening if the overall mandatory participation percentage is not met.

4.4. For additional Equal Opportunity Contracting Program requirements, see Attachment C.

5. PRE-BID MEETING:

5.1. There will be a Pre-Bid Meeting to discuss the scope of the Project, bidding requirements, pre-qualification process, and Equal Opportunity Contracting Program requirements and reporting procedures in the Public Works Contracts, Conference Room at 1010 Second Avenue, 14th Floor, San Diego, CA 92101, **at 10:00 AM, on October 28, 2014.**

5.2. All potential bidders are encouraged to attend.

5.3. To request a copy of the agenda on an alternative format, or to request a sign language or oral interpreter for this meeting, call the Public Works Contracts at (619) 533-3450 at least 5 Working Days prior to the Pre-Bid Meeting to ensure availability.

6. CONTRACTOR REGISTRATION AND ELECTRONIC REPORTING SYSTEM:

6.1. **Prior** to the Award of the Contract or each Task Order, you and your Subcontractors and Suppliers must register with the City's web-based contract compliance website, Prism®, located here:

https://pro.prismcompliance.com/default.aspx.

6.2. The City may not award the contract until registration of all subcontractors and suppliers is complete. In the event this requirement is not met within the time frame specified in the Notice of Intent to Award letter, the City reserves the right to rescind the Notice of Award / Intent to Award and to make the award to the next responsive and responsible bidder / proposer.

7. **JOINT VENTURE CONTRACTORS:** Provide a copy of the Joint Venture agreement and the Joint Venture license to the City within 10 Working Days after receiving the Contract forms. See 2-1.1.2, "Joint Venture Contractors" in The WHITEBOOK for details.

8. **PREVAILING WAGE RATES:** Pursuant to San Diego Municipal Code section 22.3019, construction, alteration, demolition, repair and maintenance work performed under this Contract is subject to State prevailing wage laws. For construction work performed under this Contract cumulatively exceeding $25,000 and for alteration, demolition, repair and maintenance work performed under this Contract cumulatively exceeding $15,000, the Contractor and its subcontractors shall comply with State prevailing wage laws including, but not limited to, the requirements listed below.

8.1. **Compliance with Prevailing Wage Requirements.** Pursuant to sections 1720 through 1861 of the California Labor Code, the Contractor and its subcontractors shall ensure that all workers who perform work under this Contract are paid not less than the prevailing rate of per diem wages as determined by the Director of the California Department of Industrial Relations (DIR). This includes work performed during the design and

preconstruction phases of construction including, but not limited to, inspection and land surveying work.

8.2. Copies of such prevailing rate of per diem wages are on file at the City and are available for inspection to any interested party on request. Copies of the prevailing rate of per diem wages also may be found at http://www.dir.ca.gov/OPRL/DPreWageDetermination.htm. Contractor and its subcontractors shall post a copy of the prevailing rate of per diem wages determination at each job site and shall make them available to any interested party upon request.

8.3. The wage rates determined by the DIR refer to expiration dates. If the published wage rate does not refer to a predetermined wage rate to be paid after the expiration date, then the published rate of wage shall be in effect for the life of this Contract. If the published wage rate refers to a predetermined wage rate to become effective upon expiration of the published wage rate and the predetermined wage rate is on file with the DIR, such predetermined wage rate shall become effective on the date following the expiration date and shall apply to this Contract in the same manner as if it had been published in said publication. If the predetermined wage rate refers to one or more additional expiration dates with additional predetermined wage rates, which expiration dates occur during the life of this Contract, each successive predetermined wage rate shall apply to this Contract on the date following the expiration date of the previous wage rate. If the last of such predetermined wage rates expires during the life of this Contract, such wage rate shall apply to the balance of the Contract.

8.4. **Penalties** for **Violations.** Contractor and its subcontractors shall comply with California Labor Code section 1775 in the event a worker is paid less than the prevailing wage rate for the work or craft in which the worker is employed.

8.5. **Payroll Records.** Contractor and its subcontractors shall comply with California Labor Code section 1776, which generally requires keeping accurate payroll records, verifying and certifying payroll records, and making them available for inspection. Contractor shall require its subcontractors to also comply with section 1776. Contractor and its subcontractors shall submit weekly certified payroll records online via the City's web-based Labor Compliance Program. Contractor is responsible for ensuring its subcontractors submit certified payroll records to the City.

8.6. **Apprentices.** Contractor and its subcontractors shall comply with California Labor Code sections 1777.5, 1777.6 and 1777.7 concerning the employment and wages of apprentices. Contractor shall be held responsible for the compliance of their subcontractors with sections 1777.5, 1777.6 and 1777.7.

8.7. **Working Hours.** Contractor and subcontractors shall comply with California Labor Code sections 1810 through 1815, including but not limited to: (i) restrict working hours on public works contracts to eight hours a day and forty hours a week, unless all hours worked in excess of 8 hours per day are compensated at not less than 1½ times the basic rate of pay; and (ii) specify penalties to be imposed on design professionals and subcontractors of $25 per worker per day for each day the worker works more than 8 hours per day and 40 hours per week in violation of California Labor Code sections1810 through 1815.

8.8. **Required Provisions for Subcontracts.** Contractor shall include at a minimum a copy of the following provisions in any contract they enter into with a subcontractor: California Labor Code sections 1771, 1775, 1776, 1777.5, 1810, 1813, 1815, 1860 and 1861.

8.9. **Labor Code Section 1861 Certification.** Contractor in accordance with California Labor Code section 3700 is required to secure the payment of compensation of its employees and by signing this Contract, Contractor certifies that "I am aware of the provisions of Section 3700 of the California Labor Code which require every employer to be insured against liability for workers' compensation or to undertake self-insurance in accordance with the provisions of that code, and I will comply with such provisions before commencing the performance of the work of this Contract."

8.10. **Labor Compliance Program.** The City has its own Labor Compliance Program as authorized by the DIR. The City will withhold contract payments when payroll records are delinquent or deemed inadequate by the City or other governmental entity, or it has been established after an investigation by the City or other governmental entity that underpayment(s) have occurred.

9. INSURANCE REQUIREMENTS:

9.1. All certificates of insurance and endorsements required by the contract are to be provided upon issuance of the City's Notice of Intent to Award letter.

9.2. Refer to sections 7-3, "LIABILITY INSURANCE", and 7-4, "WORKERS' COMPENSATION INSURANCE" of the Supplementary Special Provisions (SSP) for the insurance requirements which must be met.

10. PREQUALIFICATION OF CONTRACTORS:

10.1. Contractors submitting Bid must be pre-qualified for the total amount proposed, inclusive of all alternate items prior to the date of submittal. Bids from contractors who have not been pre-qualified as applicable and Bids that exceed the maximum dollar amount at which contractors are pre-qualified will be deemed **non-responsive** and ineligible for award. Complete information and prequalification questionnaires are available at:

http://www.sandiego.gov/cip/bidopps/prequalification.shtml

10.2. The completed questionnaire, financial statement, and bond letter or a copy of the contractor's SLBE-ELBE certification and bond letter, must be submitted no later than 2 weeks prior to the bid opening to the Public Works Contracts, Prequalification Program, 1010 Second Avenue, 14th Floor, San Diego, CA 92101. For additional information or the answer to questions about the prequalification program, contact David Stucky at 619-533-3474 or dstucky@sandiego.gov.

11. **REFERENCE STANDARDS:** Except as otherwise noted or specified, the Work shall be completed in accordance with the following standards:

Title	Edition	Document Number
Standard Specifications for Public Works Construction ("The GREENBOOK")	2012	PITS070112-01
City of San Diego Standard Specifications for Public Works Construction ("The WHITEBOOK")*	2012	PITS070112-02
City of San Diego Standard Drawings*	2012	PITS070112-03
Caltrans Standard Specifications	2010	PITS070112-04
Caltrans Standard Plans	2010	PITS070112-05
California MUTCD	2012	PITS070112-06
City Standard Drawings - Updates Approved For Use (when specified)*	Varies	Varies
Standard Federal Equal Employment Opportunity Construction Contract Specifications and the Equal Opportunity Clause Dated 09-11-84	1984	769023
NOTE: *Available online under Engineering Documents and References at: http://www.sandiego.gov/publicworks/edocref/index.shtml		

12. **CITY'S RESPONSES AND ADDENDA:** The City at its option, may respond to any or all questions submitted in writing, via letter, or FAX in the form of an addendum. No oral comment shall be of any force or effect with respect to this solicitation. The changes to the Contract Documents through addendum are made effective as though originally issued with the Bid. The Bidders shall acknowledge the receipt of Addenda on the form provided for this purpose in the Bid.

13. **CITY'S RIGHTS RESERVED:** The City reserves the right to cancel the Notice Inviting Bids at any time, and further reserves the right to reject submitted Bids, without giving any reason for such action, at its sole discretion and without liability. Costs incurred by the Bidder(s) as a result of preparing Bids under the Notice Inviting Bids shall be the sole responsibility of each bidder. The Notice Inviting Bids creates or imposes no obligation upon the City to enter a contract.

14. **CONTRACT PRICING FORMAT:** This solicitation is for a Lump Sum contract with Unit Price provisions as set forth in the Bid Proposal Form(s), Volume 2.

15. **SUBMITTAL OF "OR EQUAL" ITEMS:** See Section 4-1.6, "Trade Names or Equals" in The WHITEBOOK and as amended in the SSP.

16. **AWARD PROCESS:**

16.1. The Award of this contract is contingent upon the Contractor's compliance with all conditions precedent to Award.

16.2. Upon acceptance of a Bid, the City will prepare contract documents for execution within approximately 21 days of the date of the Bid opening and award the Contract approximately within 7 days of receipt of properly executed Contract, bonds, and insurance documents.

16.3. This contract will be deemed executed, and effective, only upon the signing of the Contract by the Mayor or designee of the City.

17. **SUBCONTRACT LIMITATIONS**: The Bidder's attention is directed to Standard Specifications for Public Works Construction, Section 2-3, "SUBCONTRACTS" in The GREENBOOK and as amended in the SSP which requires the Contractor to self-perform not less than the specified amount. Failure to comply with this requirement shall render the bid **non-responsive** and ineligible for award.

18. **AVAILABILITY OF PLANS AND SPECIFICATIONS:** Contract Documents may be obtained by visiting the City's website: http://www.sandiego.gov/cip/. Plans and Specifications for this contract are also available for review in the office of the City Clerk or Public Works Contracts.

19. **SUBMISSION OF QUESTIONS:**

19.1. The Director (or designee), of the Public Works Department is the officer responsible for opening, examining, and evaluating the competitive Bids submitted to the City for the acquisition, construction and completion of any public improvement except when otherwise set forth in these documents. All questions related to this solicitation shall be submitted to:

Public Works Contracts
1010 Second Avenue, 14th Floor
San Diego, California, 92101
Attention: [Contract Specialist listed on the front cover hereof]

OR:

Email address of the Contract Specialist listed on the front cover hereof.

19.2. Questions received less than 14 days prior to the date for opening of Bids may not be considered.

19.3. Clarifications deemed by the City to be material shall be issued by Addenda and uploaded to the City's online bidding service.

19.4. Only questions answered by formal written addenda will be binding. Oral and other interpretations or clarifications will be without legal effect. It is the Bidder's responsibility to become informed of any Addenda that have been issued and to include all such information in its Bid.

20. **ELIGIBLE BIDDERS:** No person, firm, or corporation shall be allowed to make, file, or be interested in **more** than one (1) Bid for the same work unless alternate Bids are called for. A person, firm or corporation who has submitted a sub-proposal to a Bidder, or who has quoted prices on materials to a Bidder, is not hereby disqualified from submitting a sub-proposal or quoting prices to other Bidders or from submitting a Bid in its own behalf. Any Bidder who submits more than one bid will result in the rejection of all bids submitted.

21. **SAN DIEGO BUSINESS TAX CERTIFICATE:** The Contractor and Subcontractors, not already having a City of San Diego Business Tax Certificate for the work contemplated shall

secure the appropriate certificate from the City Treasurer, Civic Center Plaza, first floor and submit to the Contract Specialist upon request or as specified in the Contract Documents. Tax Identification numbers for both the Bidder and the listed Subcontractors must be submitted on the City provided forms with the Notice Inviting Bids and Contract forms.

22. PROPOSAL FORMS: Bid shall be made only upon the Bidding Documents i.e., Proposal form attached to and forming a part of the specifications. The signature of each person signing shall be in longhand.

22.1. Bidder shall complete and submit all pages in the "Bidding Document" Section (see Volume 2) as their Bid per the schedule given under "Required Documents Schedule," (see Volume 1). Bidder is requested to retain for their reference other portions of the Contract Documents that are not required to be submitted with the Bid. The entire specifications for the bid package do not need to be submitted with the bid.

22.2. The City may require any Bidder to furnish a statement of experience, financial responsibility, technical ability, equipment, and references.

22.3. Bids and certain other forms and documents as specified in the Volume 2 of 2 of the Contract Documents shall be enclosed in a sealed envelope and shall bear the title of the work and name of the Bidder and the appropriate State Contractors License designation which the Bidder holds.

22.4. Bids may be withdrawn by the Bidder prior to, but not after, the time fixed for opening of Bids.

23. BIDDER'S GUARANTEE OF GOOD FAITH (BID SECURITY):

23.1. With the exception of the contracts valued $5,000 or less, JOC and Design-Build contracts, and contracts subject to the Small and Local Business Program of $250,000 or less e.g., ELBE contracts, each Bidder shall accompany its Bid with either a cashier's check upon some responsible bank, or a check upon such bank properly certified or an approved corporate surety bond payable to the City of San Diego, for an amount of not less than 10% of the aggregate sum of the Bid, which check or bond, and the monies represented thereby shall be held by the City as a guarantee that the Bidder, if awarded the contract, will in good faith enter into such contract and furnish the required final bonds.

23.2. The Bidder agrees that in case of Bidder's refusal or failure to execute this contract and give required final bonds, the money represented by a cashier's or certified check shall remain the property of the City, and if the Bidder shall fail to execute this contract, the Surety agrees that it will pay to the City damages which the City may suffer by reason of such failure, not exceeding the sum of 10% of the amount of the Bid.

23.3. A Bid received without the specified bid security will be rejected as being **non-responsive**.

24. AWARD OF CONTRACT OR REJECTION OF BIDS:

24.1. This contract may be awarded to the lowest responsible and reliable Bidder.

24.2. Bidders shall complete the entire Bid schedule (also referred to as "schedule of prices" or Proposal form). Incomplete price schedules will be rejected as being non-responsive.

24.3. The City reserves the right to reject any or all Bids, and to waive any informality or technicality in Bids received and any requirements of these specifications as to bidding procedure.

24.4. Bidders will not be released on account of their errors of judgment. Bidders may be released only upon receipt by the City from the Bidder within 3 Working Days, excluding Saturdays, Sundays, and state holidays, after the opening of Bids, of written notice which includes proof of honest, credible, clerical error of material nature, free from fraud or fraudulent intent, and of evidence that reasonable care was observed in the preparation of the Bid.

24.5. A non-selected Bidder may protest award of the Contract to the selected Bidder by submitting a written "Notice of Intent to Protest" including supporting documentation which shall be received by Public Works Contracting Group no later than 10 days after the City's announcement of the selected Bidder or no later than 10 days from the date that the City issues notice of designation of a Bidder as non-responsible in accordance with San Diego Municipal Code Chapter 2, § 22.3029, "Protests of Contract Award."

24.6. The City of San Diego will not discriminate with regard to race, religious creed, color, national origin, ancestry, physical handicap, marital status, sex or age, in the award of contracts.

24.7. Each Bid package properly executed as required by these specifications shall constitute a firm offer, which may be accepted by the City within the time specified in the Proposal.

24.8. The City reserves the right to evaluate all Bids and determine the lowest Bidder on the basis of any proposed alternates, additive items or options, at its discretion that will be disclosed in the Volume 2 of 2.

25. BID RESULTS:

25.1. The Bid opening by the City shall constitute the public announcement of the Apparent Low Bidder. In the event that the Apparent Low Bidder is subsequently deemed non-responsive or non-responsible, a public announcement will be posted in the City's web pagehttp://www.sandiego.gov/cip/index.shtml, with the name of the newly designated Apparent Low Bidder.

25.2. To obtain Bid results, either attend Bid opening, review the results on the City's web site, or provide a self-addressed, stamped envelope, referencing Bid number, and Bid tabulation will be mailed to you upon verification of extensions. Bid results cannot be given over the telephone.

26. THE CONTRACT:

26.1. The Bidder to whom award is made shall execute a written contract with the City of San Diego and furnish good and approved bonds and insurance certificates specified

by the City within 14 days after receipt by Bidder of a form of contract for execution unless an extension of time is granted to the Bidder in writing.

26.2. If the Bidder takes longer than 14 days to fulfill these requirements, then the additional time taken shall be added to the Bid guarantee. The Contract shall be made in the form adopted by the City, which includes the provision that no claim or suit whatsoever shall be made or brought by Contractor against any officer, agent, or employee of the City for or on account of anything done or omitted to be done in connection with this contract, nor shall any such officer, agent, or employee be liable hereunder.

26.3. If the Bidder to whom the award is made fails to enter into the contract as herein provided, the award may be annulled and the Bidder's Guarantee of Good Faith will be subject to forfeiture. An award may be made to the next lowest responsible and reliable Bidder who shall fulfill every stipulation embraced herein as if it were the party to whom the first award was made.

26.4. Pursuant to the San Diego City Charter section 94, the City may only award a public works contract to the lowest responsible and reliable Bidder. The City will require the Apparent Low Bidder to (i) submit information to determine the Bidder's responsibility and reliability, (ii) execute the Contract in form provided by the City, and (iii) furnish good and approved bonds and insurance certificates specified by the City within 14 Days, unless otherwise approved by the City, in writing after the Bidder receives notification from the City, designating the Bidder as the Apparent Low Bidder and formally requesting the above mentioned items.

26.5. The award of the Contract is contingent upon the satisfactory completion of the above mentioned items and becomes effective upon the signing of the Contract by the Mayor or designee. If the Apparent Low Bidder does not execute the Contract or submit required documents and information, the City may award the Contract to the next lowest responsible and reliable Bidder who shall fulfill every condition precedent to award. A corporation designated as the Apparent Low Bidder shall furnish evidence of its corporate existence and evidence that the officer signing the Contract and bond for the corporation is duly authorized to do so.

27. **EXAMINATION OF PLANS, SPECIFICATIONS, AND SITE OF WORK:** The Bidder shall examine carefully the Project Site, the Plans and Specifications, other materials as described in the Special Provisions, Section 2-7, and the proposal forms (e.g., Bidding Documents). The submission of a Bid shall be conclusive evidence that the Bidder has investigated and is satisfied as to the conditions to be encountered, as to the character, quality, and scope of Work, the quantities of materials to be furnished, and as to the requirements of the Bidding Documents Proposal, Plans, and Specifications.

28. **CITY STANDARD PROVISIONS:** This contract is subject to the following standard provisions. See The WHITEBOOK for details.

28.1. The City of San Diego Resolution No. R-277952 adopted on May 20, 1991 for a Drug-Free Workplace.

28.2. The City of San Diego Resolution No. R-282153 adopted on June 14, 1993 related to the Americans with Disabilities Act.

28.3. The City of San Diego Municipal Code §22.3004 for Pledge of Compliance.

28.4. The City of San Diego's Labor Compliance Program and the State of California Labor Code §§1771.5(b) and 1776.

28.5. Sections 1777.5, 1777.6, and 1777.7 of the State of California Labor Code concerning the employment of apprentices by contractors and subcontractors performing public works contracts.

28.6. The City's Equal Benefits Ordinance (EBO), Chapter 2, Article 2, Division 43 of The San Diego Municipal Code (SDMC).

28.7. The City's Information Security Policy (ISP) as defined in the City's Administrative Regulation 90.63.

29. PRE-AWARD ACTIVITIES:

29.1. The selected contractor by the City to execute a contract for this Work shall provide the information required within the time specified in "Required Documents," of this bid package. Failure to provide the information within the time specified may result in the Bid being rejected as **non-responsive.**

29.2. If the Bid is rejected as non-responsive, the selected contractor by the City to execute a contract for this Work shall forfeit the required Bid. The decision that the selected contractor by the City to execute a contract for this Work is non-responsive for failure to provide the information required within the time specified shall be at the sole discretion of the City.

30. REQUIRED DOCUMENT SCHEDULE:

30.1. The Bidder's attention is directed to the City's Municipal Code §22.0807(e), (3)-(5) for important information regarding grounds for debarment for failure to submit required documentation.

30.2. The specified Equal Opportunity Contracting Program (EOCP) forms are available for download from the City's web site at:

http://www.sandiego.gov/eoc/forms/index.shtml

ITEM	WHEN DUE	FROM	DOCUMENT TO BE SUBMITTED
1.	BID SUBMITTAL DATE/TIME	ALL BIDDERS	Bid
2.	BID SUBMITTAL DATE/TIME	ALL BIDDERS	Bid Bond
3.	BID SUBMITTAL DATE/TIME	ALL BIDDERS	Non-collusion Affidavit to be Executed By Bidder and Submitted with Bid under 23 USC 112 and PCC 7106

ITEM	WHEN DUE	FROM	DOCUMENT TO BE SUBMITTED
4.	BID SUBMITTAL DATE/TIME	ALL BIDDERS	Contractors Certification of Pending Actions
5.	BID SUBMITTAL DATE/TIME	ALL BIDDERS	Equal Benefits Ordinance Certification of Compliance
6.	BID SUBMITTAL DATE/TIME	ALL BIDDERS	Form AA35 - List of Subcontractors
7.	BID SUBMITTAL DATE/TIME	ALL BIDDERS	Form AA40 - Named Equipment/Material Supplier List
8.	WITHIN 3 WORKING DAYS OF BID OPENING	ALL BIDDERS	SLBE Good Faith Efforts Documentation
9.	WITHIN 3 WORKING DAYS OF BID OPENING WITH GOOD FAITH EFFORT DOCUMENTATION	ALL BIDDERS	Form AA60 – List of Work Made Available
10.	WITHIN 3 WORKING DAYS OF BID OPENING WITH GOOD FAITH EFFORT DOCUMENTATION	ALL BIDDERS	Proof of Valid DBE-MBE-WBE-DVBE Certification Status e.g., Certs.
11.	WITHIN 10 WORKING DAYS AFTER RECEIPT BY BIDDER OF CONTRACT FORMS	APPARENT LOW BIDDER	Names of the principal individual owners of the Apparent Low Bidder
12.	WITHIN 10 WORKING DAYS AFTER RECEIPT BY BIDDER OF CONTRACT FORMS	APPARENT LOW BIDDER	If the Contractor is a Joint Venture: • Joint Venture Agreement • Joint Venture License
13.	WITHIN 10 WORKING DAYS AFTER RECEIPT BY BIDDER OF CONTRACT FORMS	APPARENT LOW BIDDER	Form BB05 - Work Force Report
14.	WITHIN 10 WORKING DAYS AFTER RECEIPT BY BIDDER OF CONTRACT FORMS	APPARENT LOW BIDDER	Contract Forms - Agreement
15.	WITHIN 10 WORKING DAYS AFTER RECEIPT BY BIDDER OF CONTRACT FORMS	APPARENT LOW BIDDER	Contract Forms - Payment and Performance Bond
16.	WITHIN 10 WORKING DAYS AFTER RECEIPT BY BIDDER OF CONTRACT FORMS	APPARENT LOW BIDDER	Certificates of Insurance and Endorsements
17.	WITHIN 10 WORKING DAYS AFTER RECEIPT BY BIDDER OF CONTRACT FORMS	APPARENT LOW BIDDER	Contractor Certification - Drug-Free Workplace

ITEM	WHEN DUE	FROM	DOCUMENT TO BE SUBMITTED
18.	WITHIN 10 WORKING DAYS AFTER RECEIPT BY BIDDER OF CONTRACT FORMS	APPARENT LOW BIDDER	Contractor Certification - American with Disabilities Act
19.	WITHIN 10 WORKING DAYS AFTER RECEIPT BY BIDDER OF CONTRACT FORMS	APPARENT LOW BIDDER	Contractors Standards - Pledge of Compliance

CONTRACT FORMS

AGREEMENT

CONTRACT FORMS

CONSTRUCTION CONTRACT

This contract is made and entered into between THE CITY OF SAN DIEGO, a municipal corporation, herein called "City", and EC CONSTRUCTORS, INC., herein called "Contractor" for construction of **South Mission Beach Lifeguard Station**; Bid No. **K-15-1180-DBB-3**; in the amount of THREE MILLION SEVEN HUNDRED THIRTY-SIX THOUSAND ONE HUNDRED SIXTY-NINE DOLLARS AND 00/100 ($3,736,169.00), which is comprised of the Base Bid alone.

IN CONSIDERATION of the payments to be made hereunder and the mutual undertakings of the parties hereto, City and Contractor agree as follows:

1. The following are incorporated into this contract as though fully set forth herein:

   (a) The attached Faithful Performance and Payment Bonds.

   (b) The attached Proposal included in the Bid documents by the Contractor.

   (c) Reference Standards listed in the Notice Inviting Bids and the Supplementary Special Provisions (SSP).

   (d) That certain documents entitled **South Mission Beach Lifeguard Station**, on file in the office of the Public Works Department as Document No. **S-00793**, as well as all matters referenced therein.

2. The Contractor shall perform and be bound by all the terms and conditions of this contract and in strict conformity therewith shall perform and complete in a good and workmanlike manner **South Mission Beach Lifeguard Station**, Bid Number **K-15-1180-DBB-3**, San Diego, California.

3. For such performances, the City shall pay to Contractor the amounts set forth at the times and in the manner and with such additions or deductions as are provided for in this contract, and the Contractor shall accept such payment in full satisfaction of all claims incident to such performances.

4. No claim or suit whatsoever shall be made or brought by Contractor against any officer, agent, or employee of the City for or on account of anything done or omitted to be done in connection with this contract, nor shall any such officer, agent, or employee be liable hereunder.

5. This contract is effective as of the date that the Mayor or designee signs the agreement.

IN WITNESS WHEREOF, this Agreement is signed by the City of San Diego, acting by and through its Mayor or designee, pursuant to Municipal Code **§22.3102** authorizing such execution.

THE CITY OF SAN DIEGO

By _____

Print Name: _____
Principal Contract Specialist (Acting)
Public Works Contracting

Date: 2-9-15

APPROVED AS TO FORM.

Jan I. Goldsmith, City Attorney

By _____

Print Name: Chnstina L. Rae
Deputy City Attorney

Date: 2/10/2015

CONTRACTOR

By _____

Print Name: Sherri L. Summers

Title: CEO

Date: January 14, 2015

City of San Diego License No.: B2012044182

State Contractor's License No.: 585677

CONTRACT FORMS

ATTACHMENTS

CONTRACT FORMS ATTACHMENTS
PERFORMANCE BOND AND LABOR AND MATERIALMEN'S BOND

FAITHFUL PERFORMANCE BOND AND LABOR AND MATERIALMEN'S BOND:

EC CONSTRUCTORS, INC., a corporation, as principal, and Hartford Fire Insurance Company, a corporation authorized to do business in the State of California, as Surety, hereby obligate themselves, their successors and assigns, jointly and severally, to The City of San Diego a municipal corporation in the sum of THREE MILLION SEVEN HUNDRED THIRTY-SIX THOUSAND ONE HUNDRED SIXTY-NINE DOLLARS AND 00/100 ($3,736,169.00) for the faithful performance of the annexed contract, and in the sum of THREE MILLION SEVEN HUNDRED THIRTY-SIX THOUSAND ONE HUNDRED SIXTY-NINE DOLLARS AND 00/100 ($3,736,169.00) for the benefit of laborers and materialmen designated below.

Conditions:

If the Principal shall faithfully perform the annexed contract **South Mission Beach Lifeguard Station**, Bid Number **K-15-1180-DBB-3**, San Diego, California then the obligation herein with respect to a faithful performance shall be void; otherwise it shall remain in full force.

If the Principal shall promptly pay all persons, firms and corporations furnishing materials for or performing labor in the execution of this contract, and shall pay all amounts due under the California Unemployment Insurance Act then the obligation herein with respect to laborers and materialmen shall be void; otherwise it shall remain in full force.

The obligation herein with respect to laborers and materialmen shall inure to the benefit of all persons, firms and corporations entitled to file claims under the provisions of Chapter 3 of Division 5 of Title I of the Government Code of the State of California or under the provisions of Section 3082 et seq. of the Civil Code of the State of California.

Changes in the terms of the annexed contract or specifications accompanying same or referred to therein shall not affect the Surety's obligation on this bond, and the Surety hereby waives notice of same.

The Surety shall pay reasonable attorney's fees should suit be brought to enforce the provisions of this bond.

Dated January 12, 2015

Approved as to Form :

Jan I. Goldsmith, City Attorney

By _____
Deputy City Attorney 2/10/15

Approved:

By _____
Stephen Samara
Principal Contract Specialist (Acting)
Public Works Contracting

EC Constructors, Inc.
Principal

By _____

Sherri L. Summers, CEO
Printed Name of Person Signing for Principal

Hartford Fire Insurance Company
Surety

By _____
Charlotte Aquino, Attorney-in-fact

One Pointe Drive
Local Address of Surety

Brea, CA 92821
Local Address (City, State) of Surety

(714) 674-1223
Local Telephone No. of Surety

Premium $41,911.00
PREMIUM IS FOR CONTRACT TERM AND SUBJECT TO ADJUSTMENT BASED ON FINAL CONTRACT PRICE

Bond No. 72BCSGW7679

CALIFORNIA ALL-PURPOSE ACKNOWLEDGMENT

Civil Code § 1189

A notary public or other officer completing this certificate verifies only the identity of the individual who signed the document to which this certificate is attached, and not the truthfulness, accuracy or validity of that document.

STATE OF CALIFORNIA

County of San Diego }

On JAN 12 2015 (Date) before me, John Richard Flores, JR. (Insert Name of Notary exactly as it appears on the official seal), Notary Public,

personally appeared Charlotte Aquino (Name(s) of Signer(s))

,

who proved to me on the basis of satisfactory evidence to be the person(s) whose name(s) is/are subscribed to the within instrument and acknowledged to me that he/she/they executed the same in his/her/their authorized capacity(ies), and that by his/her/their signature(s) on the instrument the person(s), or the entity upon behalf of which the person(s) acted, executed the instrument.

I certify under PENALTY OF PERJURY under the laws of the State of California that the foregoing paragraph is true and correct.

Witness my hand and official seal.

Signature _____ (Signature of Notary Public)

JOHN RICHARD FLORES JR.
COMM. #2036097
Notary Public - California
San Diego County
My Comm. Expires Aug. 8, 2017

NRO1 NRO1

Place Notary Seal Above

OPTIONAL

Though the information below is not required by law, it may prove valuable to persons relying on the document and could prevent fraudulent removal and reattachment of the form to another document.

Description of Attached Document

Title or Type of Document: _____

Document Date: _____ Number of Pages: _____

Signer(s) Other Than Named Above: _____

Capacity(ies) Claimed by Signer(s)

Signer's Name: _____

☐ Individual
☐ Corporate Officer — Title(s): _____
☐ Partner ☐ Limited ☐ General
☐ Attorney in Fact
☐ Trustee
☐ Guardian or Conservator
☐ Other: _____

Signer is Representing:

RIGHT THUMBPRINT OF SIGNER
Top of thumb here

Signer's Name: _____

☐ Individual
☐ Corporate Officer — Title(s): _____
☐ Partner ☐ Limited ☐ General
☐ Attorney in Fact
☐ Trustee
☐ Guardian or Conservator
☐ Other: _____

Signer is Representing:

RIGHT THUMBPRINT OF SIGNER
Top of thumb here

POWER OF ATTORNEY

Direct Inquiries/Claims to:
THE HARTFORD
BOND, T-4
One Hartford Plaza
Hartford, Connecticut 06155
call: **888-266-3488** *or fax:* **860-757-5835**

KNOW ALL PERSONS BY THESE PRESENTS THAT: **Agency Code: 72-160200**

- [X] **Hartford Fire Insurance Company**, a corporation duly organized under the laws of the State of Connecticut
- [X] **Hartford Casualty Insurance Company**, a corporation duly organized under the laws of the State of Indiana
- [ ] **Hartford Accident and Indemnity Company**, a corporation duly organized under the laws of the State of Connecticut
- [ ] **Hartford Underwriters Insurance Company**, a corporation duly organized under the laws of the State of Connecticut
- [ ] **Twin City Fire Insurance Company**, a corporation duly organized under the laws of the State of Indiana
- [ ] **Hartford Insurance Company of Illinois**, a corporation duly organized under the laws of the State of Illinois
- [ ] **Hartford Insurance Company of the Midwest**, a corporation duly organized under the laws of the State of Indiana
- [ ] **Hartford Insurance Company of the Southeast**, a corporation duly organized under the laws of the State of Florida

having their home office in Hartford, Connecticut, (hereinafter collectively referred to as the "Companies") do hereby make, constitute and appoint, ***up to the amount of unlimited:***

Lawrence F. McMahon, James Baldassare Jr., Sarah Myers, Maria Guise, Lilia Robinson, Charlotte Aquino, Jennifer L. Clampert, Janice Martin
of
San Diego, CA

their true and lawful Attorney(s)-in-Fact, each in their separate capacity if more than one is named above, to sign its name as surety(ies) only as delineated above by ☒, and to execute, seal and acknowledge any and all bonds, undertakings, contracts and other written instruments in the nature thereof, on behalf of the Companies in their business of guaranteeing the fidelity of persons, guaranteeing the performance of contracts and executing or guaranteeing bonds and undertakings required or permitted in any actions or proceedings allowed by law.

In Witness Whereof, and as authorized by a Resolution of the Board of Directors of the Companies on August 1, 2009 the Companies have caused these presents to be signed by its Vice President and its corporate seals to be hereto affixed, duly attested by its Assistant Secretary. Further, pursuant to Resolution of the Board of Directors of the Companies, the Companies hereby unambiguously affirm that they are and will be bound by any mechanically applied signatures applied to this Power of Attorney.

Wesley W. Cowling, Assistant Secretary

M. Ross Fisher, Vice President

STATE OF CONNECTICUT }
COUNTY OF HARTFORD } ss. Hartford

On this 12th day of July, 2012, before me personally came M. Ross Fisher, to me known, who being by me duly sworn, did depose and say: that he resides in the County of Hartford, State of Connecticut; that he is the Vice President of the Companies, the corporations described in and which executed the above instrument; that he knows the seals of the said corporations; that the seals affixed to the said instrument are such corporate seals; that they were so affixed by authority of the Boards of Directors of said corporations and that he signed his name thereto by like authority.

Kathleen T. Maynard
Notary Public
My Commission Expires July 31, 2016

CERTIFICATE

I, the undersigned, Vice President of the Companies, DO HEREBY CERTIFY that the above and foregoing is a true and correct copy of the Power of Attorney executed by said Companies, which is still in full force effective as of January 12, 2015
Signed and sealed at the City of Hartford.

Gary W. Stumper, Vice President

CONTRACTOR CERTIFICATION

DRUG-FREE WORKPLACE

PROJECT TITLE: South Mission Beach Lifeguard Station

I hereby certify that I am familiar with the requirements of San Diego City Council Policy No. 100-17 regarding Drug-Free Workplace as outlined in the WHITEBOOK, Section 7-13.3, "Drug-Free Workplace", of the project specifications, and that;

EC Constructors, Inc.
(Name under which business is conducted)

has in place a drug-free workplace program that complies with said policy. I further certify that each subcontract agreement for this project contains language which indicates the subcontractor's agreement to abide by the provisions of subdivisions a) through c) of the policy as outlined.

Signed Sherri L Summers

Printed Name Sherri L. Summers

Title CEO

CONTRACTOR CERTIFICATION

AMERICAN WITH DISABILITIES ACT (ADA) COMPLIANCE CERTIFICATION

PROJECT TITLE: South Mission Beach Lifeguard Station

I hereby certify that I am familiar with the requirements of San Diego City Council Policy No. 100-4 regarding the American With Disabilities Act (ADA) outlined in the WHITEBOOK, Section 7-13.2, "American With Disabilities Act", of the project specifications, and that;

EC Constructors, Inc.
(Name under which business is conducted)

has in place workplace program that complies with said policy. I further certify that each subcontract agreement for this project contains language which indicates the subcontractor's agreement to abide by the provisions of the policy as outlined.

Signed Sherri L Summers

Printed Name Sherri L. Summers

Title CEO

CONTRACTOR CERTIFICATION

CONTRACTOR STANDARDS – PLEDGE OF COMPLIANCE

PROJECT TITLE: South Mission Beach Lifeguard Station

I declare under penalty of perjury that I am authorized to make this certification on behalf of EC Constructors, Inc., as Contractor, that I am familiar with the requirements of City of San Diego Municipal Code § 22.3224 regarding Contractor Standards as outlined in the WHITEBOOK, Section 7-13.4, ("Contractor Standards"), of the project specifications, and that Contractor has complied with those requirements.

I further certify that each of the Contractor's subcontractors whose subcontracts are greater than $50,000 in value has completed a Pledge of Compliance attesting under penalty of perjury of having complied with City of San Diego Municipal Code § 22.3224.

Dated this 14th Day of January, 2015.

Signed Sherri L Summers

Printed Name Sherri L. Summers

Title CEO

AFFIDAVIT OF DISPOSAL

WHEREAS, on the _____ DAY OF _____, 2_____ the undersigned entered into and executed a contract with the City of San Diego, a municipal corporation, for:

South Mission Beach Lifeguard Station
(Name of Project)

as particularly described in said contract and identified as Bid No. **K-15-1180-DBB-3**; SAP No. (WBS/IO/CC): **S-00793**; and **WHEREAS**, the specification of said contract requires the Contractor to affirm that "all brush, trash, debris, and surplus materials resulting from this project have been disposed of in a legal manner"; and **WHEREAS**, said contract has been completed and all surplus materials disposed of:

_____

_____

_____

NOW, THEREFORE, in consideration of the final payment by the City of San Diego to said Contractor under the terms of said contract, the undersigned Contractor, does hereby affirm that all surplus materials as described in said contract have been disposed of at the following location(s)

_____

_____

_____

and that they have been disposed of according to all applicable laws and regulations.

Dated this _____ DAY OF _____, _____.

_____ Contractor
by

ATTEST:

State of _____
County of _____

On this_____ DAY OF _____, 2____, before the undersigned, a Notary Public in and for said County and State, duly commissioned and sworn, personally appeared_____ _____ known to me to be the _____ Contractor named in the foregoing Release, and whose name is subscribed thereto, and acknowledged to me that said Contractor executed the said Release.

Notary Public in and for said County and State

ATTACHMENTS

ATTACHMENT A

SCOPE OF WORK

SCOPE OF WORK

1. **SCOPE OF WORK:** The scope of work for this project consists of the demolition of the existing South Mission Beach Lifeguard Station and the construction of a new approximate 3,676 SF Lifeguard Station (partial three-levels) and related site work. Additional work in the adjacent existing parking lot will involve trenching and connection in the street for a new water line. Miscellaneous sidewalk and curb repair and restriping of accessible parking spaces and signage is included. The existing station shall remain in place and be useable until the new station is completed and approved for occupancy. After the new station is in use and outside any defined summer moratorium dates that may exclude work, the old station can be demolished and the site repaired to its original condition/cleared of debris and rip rap per Coastal Conditions of Approval.

Note: The construction of the facilities will be taking place on the beach located seaward of the Mission Beach Boardwalk. As such, the construction activities required for construction will be taking place on top of fairly clean sands which in the dry have poor near-surface bearing capacity and trench excavation stability due to the lack of fine content within the soil. Thus, construction activities will need to consider the potential difficulty of using construction equipment with standard wheels and the potential for continued disturbance of near-surface soils. The contractor will need to consider the potential benefits of using low bearing pressure equipment, planking and other surface pavement mats, the use of water, and/or other approved soil stabilization methods to facilitate his operations.

Existence of Rock

It should be noted that any of the installation techniques described above will meet refusal on any riprap or debris left in-place. The contractor should be aware of the possible presence of existing riprap and debris extending to an undetermined depth along the sheet-pile alignment, which will require removal prior to sheet-pile installation.

Allow continued operations of the existing Station during construction. Demolition to follow completion of the new station and dates approved by the City. Allow 5 days prior to demolition for Lifeguard staff to relocate into the new building.

1.1. The Work shall be performed in accordance with:

1.1.1. The Notice Inviting Bids and Plans numbered 32849-1-D through 32849-94-D, inclusive.

2. **CONSTRUCTION COST:** The City's estimated construction cost for this contract is **$3,717, 000.00.**

3. **LOCATION OF WORK:** See attached Location Map.

4. **CONTRACT TIME:** The Contract Time for completion of the Work shall be **264 Working Days**.

5. **CONTRACTOR'S LICENSE CLASSIFICATION:** In accordance with the provisions of California Law, the Contractor shall possess valid appropriate license(s) at the time that the Bid is submitted. Failure to possess the specified license(s) shall render the Bid as **non-responsive** and shall act as a bar to award of the Contract to any Bidder not possessing required license(s) at the time of Bid.

5.1. The City has determined the following licensing classifications for this contract:

- CLASS B

ATTACHMENT B

INTENTIONALLY LEFT BLANK

ATTACHMENT C

EQUAL OPPORTUNITY CONTRACTING PROGRAM

EQUAL OPPORTUNITY CONTRACTING PROGRAM

1. To The WHITEBOOK, Chapter 10, Sections D and E, DELETE each in its entirety, and SUBSTITUTE with the following:

D. CITY'S EQUAL OPPORTUNITY COMMITMENT.

1. Nondiscrimination in Contracting Ordinance.

1. The Contractor, Subcontractors and Suppliers shall comply with requirements of the City's Nondiscrimination in Contracting Ordinance, San Diego Municipal Code §§22.3501 through 22.3517.

   The Contractor shall not discriminate on the basis of race, gender, religion, national origin, ethnicity, sexual orientation, age, or disability in the solicitation, selection, hiring, or treatment of subcontractors, vendors, or suppliers. The Contractor shall provide equal opportunity for subcontractors to participate in subcontracting opportunities. The Contractor understands and agrees that violation of this clause shall be considered a material breach of the contract and may result in contract termination, debarment, or other sanctions.

   The Contractor shall include the foregoing clause in all contracts between the Contractor and Subcontractors and Suppliers.

2. Disclosure of Discrimination Complaints. As part of its Bid or Proposal, the Bidder shall provide to the City a list of all instances within the past 10 years where a complaint was filed or pending against Bidder in a legal or administrative proceeding alleging that Bidder discriminated against its employees, subcontractors, vendors, or suppliers, and a description of the status or resolution of that complaint, including any remedial action taken.

3. Upon the City's request, the Contractor agrees to provide to the City, within 60 days, a truthful and complete list of the names of all Subcontractors and Suppliers that the Contractor has used in the past 5 years on any of its contracts that were undertaken within San Diego County, including the total dollar amount paid by the Contractor for each subcontract or supply contract.

4. The Contractor further agrees to fully cooperate in any investigation conducted by the City pursuant to the City's Nondiscrimination in Contracting Ordinance, Municipal Code §§22.3501 through 22.3517. The Contractor understands and agrees that violation of this clause shall be considered a material breach of the Contract and may result in remedies being ordered against the Contractor up to and including contract termination, debarment and other sanctions for violation of the provisions of the Nondiscrimination in Contracting Ordinance. The Contractor further understands and agrees that the procedures, remedies and sanctions provided for in the Nondiscrimination in Contracting Ordinance apply only to violations of the Ordinance.

E. EQUAL EMPLOYMENT OPPORTUNITY OUTREACH PROGRAM.

1. The Contractor, Subcontractors and Suppliers shall comply with the City's Equal Employment Opportunity Outreach Program, San Diego Municipal Code §§22.2701 through 22.2707.

   The Contractor shall not discriminate against any employee or applicant for employment on any basis prohibited by law. Contractor shall provide equal opportunity in all employment practices. Prime Contractor shall ensure their subcontractors comply with this program. Nothing in this section shall be interpreted to hold a prime contractor liable for any discriminatory practice of its subcontractors.

   The Contractor shall include the foregoing clause in all contracts between the Contractor and Subcontractors and Suppliers.

2. If the Contract is competitively solicited, the selected Bidder shall submit a Work Force Report (Form BB05), within 10 Working Days after receipt by the Bidder of Contract forms to the City for approval as specified in the Notice of Intent to Award letter from the City.

3. If a Work Force Report is submitted, and the City determines there are under-representations when compared to County Labor Force Availability data, the selected Bidder shall submit an Equal Employment Opportunity Plan.

4. If the selected Bidder submits an Equal Employment Opportunity Plan, it shall include the following assurances:

   1. The Contractor shall maintain a working environment free of discrimination, harassment, intimidation and coercion at all sites and in all facilities at which the Contractor's employees are assigned to work.

   2. The Contractor reviews its EEO Policy, at least annually, with all on-site supervisors involved in employment decisions.

   3. The Contractor disseminates and reviews its EEO Policy with all employees at least once a year, posts the policy statement and EEO posters on all company bulletin boards and job sites, and documents every dissemination, review and posting with a written record to identify the time, place, employees present, subject matter, and disposition of meetings.

   4. The Contractor reviews, at least annually, all supervisors' adherence to and performance under the EEO Policy and maintains written documentation of these reviews.

   5. The Contractor discusses its EEO Policy Statement with subcontractors with whom it anticipates doing business, includes the EEO Policy Statement in its subcontracts, and provides such documentation to the City upon request.

   6. The Contractor documents and maintains a record of all bid solicitations and outreach efforts to and from subcontractors, contractor associations and other business associations.

7. The Contractor disseminates its EEO Policy externally through various media, including the media of people of color and women, in advertisements to recruit, maintains files documenting these efforts, and provides copies of these advertisements to the City upon request.

8. The Contractor disseminates its EEO Policy to union and community organizations.

9. The Contractor provides immediate written notification to the City when any union referral process has impeded the Contractor's efforts to maintain its EEO Policy.

10. The Contractor maintains a current list of recruitment sources, including those outreaching to people of color and women, and provides written notification of employment opportunities to these recruitment sources with a record of the organizations' responses.

11. The Contractor maintains a current file of names, addresses and phone numbers of each walk-in applicant, including people of color and women, and referrals from unions, recruitment sources, or community organizations with a description of the employment action taken.

12. The Contractor encourages all present employees, including people of color and women employees, to recruit others.

13. The Contractor maintains all employment selection process information with records of all tests and other selection criteria.

14. The Contractor develops and maintains documentation for on-the-job training opportunities, participates in training programs, or both for all of its employees, including people of color and women, and establishes apprenticeship, trainee, and upgrade programs relevant to the Contractor's employment needs.

15. The Contractor conducts, at least annually, an inventory and evaluation of all employees for promotional opportunities and encourages all employees to seek and prepare appropriately for such opportunities.

16. The Contractor ensures the company's working environment and activities are non-segregated except for providing separate or single-user toilets and necessary changing facilities to assure privacy between the sexes.

ATTACHMENT D

INTENTIONALLY LEFT BLANK

ATTACHMENT E

SUPPLEMENTARY SPECIAL PROVISIONS

SUPPLEMENTARY SPECIAL PROVISIONS

The following Supplementary Special Provisions (SSP) modifies the following documents:

1) Standard Specifications for Public Works Construction (The GREENBOOK) currently in effect.

2) The City of San Diego Standard Specifications for Public Works Construction (The WHITEBOOK).

SECTION 1 – TERMS, DEFINITIONS, ABBREVIATIONS, UNITS OF MEASURE, AND SYMBOLS

1-2 TERMS AND DEFINITIONS.

Normal Working Hours. To the City Supplement, ADD the following:

The Normal Working Hours are 7:30 AM to 4:30 PM.

SECTION 2 - SCOPE AND CONTROL OF WORK

2-3.2 Self Performance. DELETE in its entirety and SUBSTITUTE with the following:

1. You must perform, with your own organization, Contract work amounting to at least 50% of the base bid alone or base bid and any additive or deductive alternate(s) that together when added or deducted form the basis of award.

2. The self performance percentage requirement will be waived for contracts when a "B" License is required or allowed.

2-5.3.1 General. To the City Supplement, ADD the following

7. For products for which an AML is available, products listed in the AML shall be used. A submittal review will be conducted for products not identified on an AML on a case-by-case basis when:

    a) The product type or category is not in the AML.

    b) The AML does not list at least two available manufacturers of the product.

    c) The material or manufacturer listed in the AML is no longer available. Documentation to substantiate the product is no longer available or in production is required as part of the submittal.

In the case of conducting a submittal review when required by the Plans or Special Provisions, or when requested by the Engineer, all submittals shall be accompanied by the City's submittal form.

The Product Submittal Form is available for download at:

http://www.sandiego.gov/publicworks/edocref/index.shtml

2-7 SUBSURFACE DATA. ADD the following:

4. In preparation of the Contract Documents, the designer has relied upon the following reports of explorations and tests of subsurface conditions at the Work Site:

    1. Report of Geotechnical Investigation by TerraCosta Consulting Group, Project No. 2231, Reports and Updates as dated March 31,2005, May 10,2005, January 21, 2007, February 1, 2007, November 8, 2007, June 2, 2011, and December 1, 2011.

5. The report(s) listed above is (are) available for review by contacting the Contract Specialist or visiting:

    ftp://ftp.sannet.gov/OUT/ECP/2-7%20SUBSURFACE%20DATA/South%20Mission%20Beach%20Lifeguard%20Station/

2-14.3 Coordination. ADD the following:

Other adjacent City project(s) are scheduled for construction for the same time period in the vicinity of [North Jetty Road, Mission Blvd]. See Appendix "E" for approximate location. The Work shall be coordinated with the adjacent project(s) as listed below:

a) Sewer Group 815, Bijan Shakiba (619-533-5191)

b) UU977-1, Mario Reyes (619-533-7426)

2-16 TECHNICAL STUDIES AND DATA. ADD the following:

5. In preparation of the Contract Documents, the designer has relied upon the following studies, data, reports of explorations, and tests:

    1. Report of Water Quality Technical Report prepared by RBF Consulting dated July 16, 2014.

    2. Report of Hydrology and Hydraulic Basis of Design prepared by RBF Consulting dated July 16, 2014.

    ftp://ftp.sannet.gov/OUT/ECP/2-16%20TECHNICAL%20STUDIES%20AND%20DATA/South%20Mission%20Beach%20Lifeguard%20Station/

SECTION 4 - CONTROL OF MATERIALS

4-1.3.4 **Inspection Paid For By the Contractor.** To the City Supplement, ADD the following:

The contractor shall employ and pay for the services of qualified and specialty inspection entity to perform specialty inspection services as required.

Special Inspections as indicated on Sheets S-1.1 and S-1.2 of these contract plans.

4-1.3.6 **Preapproved Materials.** To the City Supplement, ADD the following:

3. You shall submit in writing a list of all products to be incorporated in the Work that are on the AML.

4-1.6 **Trade Names or Equals.** ADD the following:

You must submit your list of proposed substitutions for "an equal" ("or equal") item(s) **no less than 15 Working Days prior to Bid due date** and on the City's Product Submittal Form available at:

http://www.sandiego.gov/publicworks/edocref/index.shtml

SECTION 6 - PROSECUTION, PROGRESS AND ACCEPTANCE OF WORK

6-2.1 **Moratoriums.** To the City Supplement, ADD the following:

Do not work in the areas where there is currently a moratorium issued by the City. The areas subject to moratorium are listed here:

A. South Mission Beach Lifeguard Station and its adjacent parks & parking lots from Memorial Day to Labor Day (inclusive).

6-7.1 **General.** To the City Supplement, ADD the following:

5. For Water projects where shutdowns of 16 inch and larger pipes are required, there is a shutdown moratorium from May until October. Contractor shall plan and schedule work accordingly. No additional payment or working days will be granted for delays due to this moratorium.

6. 30 Working days for full depth asphalt final mill and resurfacing work required per SDG-107.

SECTION 7 - RESPONSIBILITIES OF THE CONTRACTOR

7-3 **LIABILITY INSURANCE.** DELETE in its entirety and SUBSTITUTE with the following:

The insurance provisions herein must not be construed to limit your indemnity obligations contained in the Contract.

7-3.1 Policies and Procedures.

1. You must procure the insurance described below, at its sole cost and expense, to provide coverage against claims for loss including injuries to persons or damage to property, which may arise out of or in connection with the performance of the Work by you, your agents, representatives, officers, employees or Subcontractors.

2. Insurance coverage for property damage resulting from your operations is on a replacement cost valuation. The market value will not be accepted.

3. You must maintain this insurance for the duration of this contract and at all times thereafter when you are correcting, removing, or replacing Work in accordance with this contract. Your liabilities under the Contract, e.g., your indemnity obligations, is not deemed limited to the insurance coverage required by this contract.

4. Payment for insurance is included in the various items of Work as bid by you, and except as specifically agreed to by the City in writing, you are not entitled to any additional payment. Do not begin any work under this contract until you have provided and the City has approved all required insurance.

5. Policies of insurance must provide that the City is entitled to 30 days (10 days for cancellation due to non-payment of premium) prior written notice of cancellation or non-renewal of the policy. Maintenance of specified insurance coverage is a material element of the Contract. Your failure to maintain or renew coverage or to provide evidence of renewal during the term of the Contract may be treated by the City as a material breach of the Contract.

7-3.2 Types of Insurance.

7-3.2.1 Commercial General Liability Insurance.

1. Commercial General Liability Insurance must be written on the current version of the ISO Occurrence form CG 00 01 07 98 or an equivalent form providing coverage at least as broad.

2. The policy must cover liability arising from premises and operations, XCU (explosions, underground, and collapse), independent contractors, products/completed operations, personal injury and advertising injury, bodily injury, property damage, and liability assumed under an insured's contract (including the tort liability of another assumed in a business contract).

3. There must be no endorsement or modification limiting the scope of coverage for either "insured vs. insured" claims or contractual liability. You must maintain the same or equivalent insurance for at least 10 years following completion of the Work.

4. All costs of defense must be outside the policy limits. Policy coverage must be in liability limits of not less than the following:

General Annual Aggregate Limit	Limits of Liability
Other than Products/Completed Operations	$2,000,000
Products/Completed Operations Aggregate Limit	$2,000,000
Personal Injury Limit	$1,000,000
Each Occurrence	$1,000,000

7-3.2.2 Commercial Automobile Liability Insurance.

1. You must provide a policy or policies of Commercial Automobile Liability Insurance written on the current version of the ISO form CA 00 01 12 90 or later version or equivalent form providing coverage at least as broad in the amount of $1,000,000 combined single limit per accident, covering bodily injury and property damage for owned, non-owned, and hired automobiles ("Any Auto").

2. All costs of defense must be outside the limits of the policy.

7-3.2.3 Contractors Pollution Liability Insurance.

1. You must procure and maintain at your expense or require Subcontractor, as described below to procure and maintain, the Contractors Pollution Liability Insurance including contractual liability coverage to cover liability arising out of cleanup, removal, storage, or handling of hazardous or toxic chemicals, materials, substances, or any other pollutants by you or any Subcontractor in an amount not less than $2,000,000 limit for bodily injury and property damage.

2. All costs of defense must be outside the limits of the policy. Any such insurance provided by Subcontractor instead of you must be approved separately in writing by the City.

3. For approval of a substitution of Subcontractor's insurance, you must certify that all activities for which the Contractors Pollution Liability Insurance will provide coverage will be performed exclusively by the Subcontractor providing the insurance. The deductible must not exceed $25,000 per claim.

4. Contractual liability must include coverage of tort liability of another party to pay for bodily injury or property damage to a third person or organization. There must be no endorsement or modification of the coverage limiting the scope of coverage for either "insured vs. insured" claims or contractual liability.

5. Occurrence based policies must be procured before the Work commences and must be maintained for the Contract Time. Claims Made policies must be procured before the Work commences, must be maintained for the Contract Time, and must include a 12 month extended Claims Discovery Period applicable to this contract or the existing policy or policies must continue to be maintained for 12 months after the completion of the Work without advancing the retroactive date.

6. Except as provided for under California law, the policy or policies must provide that the City is entitled to 30 days prior written notice (10 days for cancellation due to non-payment of premium) of cancellation or non-renewal of the policy or policies.

7-3.2.5 Contractors Builders Risk Property Insurance.

1. You must provide at its expense, and maintain until Final Acceptance of the Work, a Special Form Builders Risk Policy or Policies. This insurance must be in an amount equal to the replacement cost of the completed Work (without deduction for depreciation) including the cost of excavations, grading, and filling. The policy or policies limits must be 100% of this contract value of the Work plus15% to cover administrative costs, design costs, and the costs of inspections and construction management.

2. Insured property must include material or portions of the Work located away from the Site but intended for use at the Site, and must cover material or portions of the Work in transit. The policy or policies must include as insured property scaffolding, falsework, and temporary buildings located at the Site. The policy or policies must cover the cost of removing debris, including demolition.

3. The policy or policies must provide that all proceeds thereunder must be payable to the City as Trustee for the insured, and must name the City, the Contractor, Subcontractors, and Suppliers of all tiers as named insured. We as Trustee will collect, adjust, and receive all monies which may become due and payable under the policy or policies, may compromise any and all claims thereunder, and will apply the proceeds of such insurance to the repair, reconstruction, or replacement of the Work.

4. Any deductible applicable to the insurance must be identified in the policy or policies documents and responsibility for paying the part of any loss not covered because of the application of such deductibles must be apportioned among the parties except for the City as follows: if there is more than one claimant for a single occurrence, then each claimant must pay a pro-rata share of the per occurrence deductible based upon the percentage of their paid claim to the total paid for insured. The City must be entitled to 100% of its loss. The Contractor must pay the City any portion of that loss not covered because of a deductible, at the same time the proceeds of the insurance are paid to the City as trustee.

5. Any insured, other than the City, making claim to which a deductible applies must be responsible for 100% of the loss not insured because of the deductible. Except as provided for under California law, the policy or policies must provide that the City is entitled to 30 days prior written notice (10 days for cancellation due to non-payment of premium) of cancellation or non-renewal of the policy or policies.

7-3.3 Rating Requirements. Except for the State Compensation Insurance Fund, all insurance required by this contract as described herein must be carried only by responsible insurance companies with a rating of, or equivalent to, at least "A-, VI" by A.M. Best Company, that are authorized by the California Insurance Commissioner to do business in the State, and that have been approved by the City.

7-3.3.1 **Non-Admitted Carriers.** The City will accept insurance provided by non-admitted, "surplus lines" carriers only if the carrier is authorized to do business in the State and is included on the List of Approved Surplus Lines Insurers (LASLI list).

All policies of insurance carried by non-admitted carriers must be subject to all of the requirements for policies of insurance provided by admitted carriers described herein.

7-3.4 **Evidence of Insurance.** Furnish to the City documents e.g., certificates of insurance and endorsements evidencing the insurance required herein, and furnish renewal documentation prior to expiration of this insurance. Each required document must be signed by the insurer or a person authorized by the insurer to bind coverage on its behalf. We reserve the right to require complete, certified copies of all insurance policies required herein.

7-3.5 **Policy Endorsements.**

7-3.5.1 **Commercial General Liability Insurance.**

7-3.5.1.1 **Additional Insured.**

a) You must provide at your expense policy endorsement written on the current version of the ISO Occurrence form CG 20 10 11 85 or an equivalent form providing coverage at least as broad.

b) To the fullest extent allowed by law e.g., California Insurance Code §11580.04, the policy must be endorsed to include the City and its respective elected officials, officers, employees, agents, and representatives as additional insured.

c) The additional insured coverage for projects for which the Engineer's Estimate is $1,000,000 or more must include liability arising out of: (a) Ongoing operations performed by you or on your behalf, (b) your products, (c) your work, e.g., your completed operations performed by you or on your behalf, or (d) premises owned, leased, controlled, or used by you.

d) The additional insured coverage for projects for which the Engineer's Estimate is less than $1,000,000 must include liability arising out of: (a) Ongoing operations performed by you or on your behalf, (b) your products, or (c) premises owned, leased, controlled, or used by you.

7-3.5.1.2 **Primary and Non-Contributory Coverage.** The policy must be endorsed to provide that the coverage with respect to operations, including the completed operations, if appropriate, of the Named Insured is primary to any insurance or self-insurance of the City and its elected officials, officers, employees, agents and representatives. Further, it must provide that any insurance maintained by the City and its elected officials, officers, employees, agents and representatives must be in excess of your insurance and must not contribute to it.

7-3.5.1.3 **Project General Aggregate Limit.** The policy or policies must be endorsed to provide a Designated Construction Project General Aggregate Limit that will apply only to the Work. Only claims payments which arise from the Work must reduce the Designated Construction Project General Aggregate Limit. The Designated

Construction Project General Aggregate Limit must be in addition to the aggregate limit provided for the products-completed operations hazard.

7-3.5.2 Commercial Automobile Liability Insurance.

7-3.5.2.1 Additional Insured. Unless the policy or policies of Commercial Auto Liability Insurance are written on an ISO form CA 00 01 12 90 or a later version of this form or equivalent form providing coverage at least as broad, the policy must be endorsed to include the City and its respective elected officials, officers, employees, agents, and representatives as additional insured, with respect to liability arising out of automobiles owned, leased, hired or borrowed by you or on your behalf. This endorsement is limited to the obligations permitted by California Insurance Code §11580.04.

7-3.5.3 Contractors Pollution Liability Insurance Endorsements.

7-3.5.3.1 Additional Insured.

a) The policy or policies must be endorsed to include as an Insured the City and its respective elected officials, officers, employees, agents, and representatives, with respect to liability arising out of: (a) Ongoing operations performed by you or on your behalf, (b) your products, (c) your work, e.g., your completed operations performed by you or on your behalf, or (d) premises owned, leased, controlled, or used by you; except that in connection with, collateral to, or affecting any construction contract to which the provisions of subdivision (b) of § 2782 of the California Civil Code apply, this endorsement must not provide any duty of indemnity coverage for the active negligence of the City and its respective elected officials, officers, employees, agents, and representatives in any case where an agreement to indemnify the City and its respective elected officials, officers, employees, agents, and representatives would be invalid under subdivision (b) of §2782 of the California Civil Code.

b) In any case where a claim or loss encompasses the negligence of the Insured and the active negligence of the City and its respective elected officials, officers, employees, agents, and representatives that is not covered because of California Insurance Code §11580.04, the insurer's obligation to the City and its respective elected officials, officers, employees, agents, and representatives must be limited to obligations permitted by California Insurance Code §11580.04.

7-3.5.3.2 Primary and Non-Contributory Coverage. The policy or policies must be endorsed to provide that the insurance afforded by the Contractors Pollution Liability Insurance policy or policies is primary to any insurance or self-insurance of the City and its elected officials, officers, employees, agents and representatives with respect to operations including the completed operations of the Named Insured. Any insurance maintained by the City and its elected officials, officers, employees, agents and representatives must be in excess of your insurance and must not contribute to it.

7-3.5.3.3 Severability of Interest. For Contractors Pollution Liability Insurance, the policy or policies must provide that your insurance must apply separately to each insured against whom claim is made or suit is brought, except with respect to the limits of the insurer's liability and must provide cross-liability coverage.

7-3.5.5 Builders Risk Endorsements.

7-3.5.5.1 Waiver of Subrogation. The policy or policies must be endorsed to provide that the insurer will waive all rights of subrogation against the City, and its respective elected officials, officers, employees, agents, and representatives for losses paid under the terms of the policy or policies and which arise from work performed by the Named Insured for the City.

7-3.5.5.2 Builders Risk – Partial Utilization. If the City desire to occupy or use a portion or portions of the Work prior to Acceptance in accordance with this contract, the City will notify you and you must immediately notify your Builder's Risk insurer and obtain an endorsement that the policy or policies must not be cancelled or lapse on account of any such partial use or occupancy. You must obtain the endorsement prior to our occupation and use.

7-3.6 Deductibles and Self-Insured Retentions. You must pay for all deductibles and self-insured retentions. You must disclose deductibles and self-insured retentions to the City at the time the evidence of insurance is provided.

7-3.7 Reservation of Rights. The City reserves the right, from time to time, to review your insurance coverage, limits, deductibles and self-insured retentions to determine if they are acceptable to the City. The City will reimburse you, without overhead, profit, or any other markup, for the cost of additional premium for any coverage requested by the Engineer but not required by this contract.

7-3.8 Notice of Changes to Insurance. You must notify the City 30 days prior to any material change to the policies of insurance provided under this contract.

7-3.9 Excess Insurance. Policies providing excess coverage must follow the form of the primary policy or policies e.g., all endorsements.

7-4 WORKERS' COMPENSATION INSURANCE. DELETE in its entirety and SUBSTITUTE with the following:

7-4.1 Workers' Compensation Insurance and Employers Liability Insurance.

1. In accordance with the provisions of §3700 of the California Labor Code, you must provide at your expense Workers' Compensation Insurance and Employers Liability Insurance to protect you against all claims under applicable state workers compensation laws. The City, its elected officials, and employees will not be responsible for any claims in law or equity occasioned by your failure to comply with the requirements of this section.

2. Limits for this insurance must be not less than the following:

Workers' Compensation	Statutory Employers Liability
Bodily Injury by Accident	$1,000,000 each accident
Bodily Injury by Disease	$1,000,000 each employee
Bodily Injury by Disease	$1,000,000 policy limit

3. By signing and returning the Contract you certify that you are aware of the provisions of §3700 of the Labor Code which require every employer to be insured against liability for worker's compensation or to undertake self-insurance in accordance with the provisions of that code and you must comply with such provisions before commencing the Work as required by §1861 of the California Labor Code.

7-4.1.1 **Waiver of Subrogation.** The policy or policies must be endorsed to provide that the insurer will waive all rights of subrogation against the City, and its respective elected officials, officers, employees, agents, and representatives for losses paid under the terms of the policy or policies and which arise from work performed by the Named Insured for the City.

7-5 **PERMITS, FEES, AND NOTICES.** To the City Supplement, ADD the following:

The Contractor is responsible for obtaining and paying all required permits.

7-10.5.3 **Steel Plate Covers.** Table 7-10.5.3(A), REVISE the plate thickness for 5'-3" trench width to read 1 ¾".

7-15 **INDEMNIFICATION AND HOLD HARMLESS AGREEMENT.** To the City Supplement, fourth paragraph, last sentence, DELETE in its entirety and SUBSTITUTE with the following:

Your duty to indemnify and hold harmless does not include any claims or liability arising from the established active or sole negligence, or willful misconduct of the City, its officers, or employees.

ADD:

7-16 **COMMUNITY OUTREACH.**

7-16.1 **General.**

1. To ensure consistency with the City's community outreach plan for the project, the City will work with the Contractor to inform the public (which includes, but is not limited to, property owners, renters, homeowners, business owners, recreational users, and other community members and stakeholders) of construction impacts. Efforts by the Contractor to mitigate construction impacts by communicating with the public require close coordination and cooperation with the City.

2. The Contractor will perform the community outreach activities required throughout the Contract Time.

3. The Contractor shall closely coordinate the Work with the businesses, institutions, residents and property owners impacted by the Project. Example duties of the Contractor include notification to the businesses, institutions and residents of the commencement of construction activities not less than 5 days in advance, coordination of access for vehicular and pedestrian traffic to businesses, institutions and residences impacted by the Project, reporting of

Contractor activities at all Project progress meetings scheduled by the Engineer, attendance to the Project Pre-construction Meeting, attendance at 2 community meetings, response to community questions and complaints related to Contractor activities, and written documentation including logging in all inquiries and complaints received into the City's Public Contact Log located on the City's SDShare site:

http://sdshare/forums/ecp/PITS/picr/Lists/Public%20Contact%20Log/AllItems.aspx.

4. The Contractor shall execute the Information Security Policy Acknowledgement Form - For Non-City Employees within 15 days of the award of the Contract if:

   a) The contact information for the Contractor is made available on any outreach materials or;

   b) The Contractor will be the primary point of contact to resolve project related inquiries and complaints.

5. Electronic Communication.

   All inquiries and complaints will be logged in to the City's SDShare site within 24 hours of receipt of inquiries and complaints.

   Any updates or a resolution of inquiries, and complaints shall be documented in the City's SDShare site within 24 hours.

   Copies of email communications shall be saved on to the City's SDShare site as individually as an Outlook Message Format (*.msg).

   All graphics, photos, and other electronic files associated with the inquiries and or complaints shall be saved into the individual record.

6. **When specified**, present your Exclusive Community Liaison to the Engineer, in writing, within 15 days of the award of the Contract.

7-16.2 Submittals.

1. The Contractor shall submit to the Resident Engineer, for review and approval, all drafts of letters, notices, postcards, door hangers, signs, mailing lists, proposed addresses for hand-delivery, and any other notices and letters that are to be mailed and or distributed to the public.

   a. Prior to distributing or mailing, the Contractor shall submit final drafts of letters, notices, postcards, door hangers, signs, and any other notices and letters to the Resident Engineer for final review and approval.

b. After distributing or mailing, the Contractor shall submit verification of delivery and any copies of returned notices to the Resident Engineer.

2. The Contractor will use the City's SDShare site to identify and summarize communications (via phone, in person, and email) with the public the within 24 hours of receipt, even if the Contractor's response to the individual is still incomplete. The Contractor will upload to the City's SDShare site copies of all written, electronic, and verbal communications and conversations with the public.

7-16.3 Public Notice by Contractor.

1. Furnish and distribute public notices in the form of door hangers using the City's format to all occupants and/or property owners along streets where Work is to be performed at least 5 days before starting the Work as directed by the Resident Engineer.

2. For all Work on private property, contact each owner and occupant individually a minimum of 15 days prior to the Work. If the Work has been delayed, re-notify owners and occupants of the new Work schedule, as directed by the Resident Engineer.

7-16.4 Quality Assurance.

1. During the course of community outreach, the Contractor shall ensure the character of all persons that conduct community outreach (distributing door hangers, attending community meetings, interacting with the public, etc.), on behalf of the Contractor:

   a. Have the ability to speak and comprehend English and/or Spanish, as appropriate for the community or public they are informing,

   b. Possess and display easily verifiable and readable personal identification that identifies the person as an employee of the Contractor,

   c. Have the interpersonal skills to effectively, professionally, and tactfully represent the project, Contractor, and City to the public.

7-16.5 Communications with the Public.

1. The Contractor shall provide updates on construction impacts to the Resident Engineer. The Contractor shall notify the Resident Engineer in advance about time-sensitive construction impacts and may be required to distribute construction impact notices to the public on short notice.

2. The Contractor shall incorporate community outreach activities related to construction impacts in the baseline schedule and update the Resident Engineer with each week's submittal of the Three-Week Look Ahead Schedule.

3. At the request of the Resident Engineer, the Contractor shall attend and participate in project briefings at community meetings.

4. The Contractor shall coordinate with the Resident Engineer on all responses and actions taken to address public inquiries and complaints within 24-hours that they are received.

7-16.6 Communications with Media.

1. The City may allow members of the media access to its construction site(s) on a case-by-case basis only.

2. Occasionally, members of the media may show up at construction sites, uninvited. Members of the media (including, but not limited to newspaper, magazine, radio, television, bloggers, and videographers) do not have the legal right to be in the construction site without the City's permission.

3. In the event media representatives arrive near or on the construction site(s), the Contractor shall keep them off the site(s), in a courteous and professional manner, until a Public Information Officer is available to meet them at an approved location.

4. The Contractor shall report all members of the media visits to the Resident Engineer as quickly as possible, so that the City's Public Information Officer can meet with the members of the media at the construction site(s).

5. If the City allows members of the media to access a construction site, the Contractor shall allow the City to escort the media representatives while they are on the construction site and shall ensure their safety.

6. The Contractor shall require media representatives to sign in and out of the Site Visitor Log and to use Personal Protective Equipment.

7. The Contractor has a right to speak to members of the media about its company and its role on the project. All other questions shall be referred to the City.

7-16.7 Exclusive Community Liaison Services.

If directed to conduct Exclusive Community Liaison Services, the Contractor shall retain an Exclusive Community Liaison for the Project whose sole responsibilities will be as follows:

1. Develop a contact list of community, tenants, property owners, and agencies with a stake in the project.

2. Notify businesses, institutions, property owners, and residents of the commencement of construction activities and utility service interruptions not less than 5 days in advance.

3. Coordinate access for vehicular and pedestrian traffic to businesses, institutions and residences impacted by the Project.

4. Prepare and present of materials in coordination with the Resident Engineer (the City's standards and guidelines for the communication materials are available for review by Bidders by sending a request to the Contract Specialist).

5. Respond to community questions and complaints related to Contractor activities.

6. Write, edit, update, or produce brochures, pamphlets and news releases.

7. Provide standard telephone inquiries and e-mail responses:

   a) Respond to telephone calls and e-mails from the public.

   b) Record calls and e-mails on the City's SDShare site.

8. Report Exclusive Community Liaison activities at all progress meetings scheduled by the Resident Engineer.

9. Attendance at pre-construction, community and stakeholders meetings.

7-16.7.1 **Exclusive Community Liaison Work Plan.** The Work plan for the Exclusive Community Liaison shall address the items of Work specified in these specifications. Present your Exclusive Community Liaison and submit your exclusive community outreach plan (in writing) **as specified** within 15 days of the Award of the Contract.

7-16.8 **Payment.** The Payment for the community outreach and public notices is included in the various Bid items. The payment for exclusive community liaison is in the bid item for "Exclusive Community Liaison Services" when provided as a separate Bid item." If no Bid item has been provided the payment is included in the various Bid items.

7-20 **ELECTRONIC COMMUNICATION**. ADD the following:

Virtual Project Manager will be used on this contract

SECTION 8 - FACILITIES FOR AGENCY PERSONNEL

8-2 **FIELD OFFICE FACILITIES.** To the City Supplement, DELETE in its entirety.

SECTION 9 - MEASUREMENT AND PAYMENT

9-3.2.5 **Withholding of Payment.** To the City Supplement, item i), DELETE in its entirety and SUBSTITUTE with the following:

i) Your failure to comply with 7-2.3, "PAYROLL RECORDS" and 2-16, "CONTRACTOR REGISTRATION AND ELECTRONIC REPORTING SYSTEM."

ADD:

9-3.7 **Compensation Adjustments for Price Index Fluctuations.** This Contract is not subject to the provisions of The WHITEBOOK for Compensation Adjustments for Price Index Fluctuations for the paving asphalt.

SECTION 212 - LANDSCAPE AND IRRIGATION MATERIALS

ADD:

212-3.2.2.3 **Trench Marker Tape.** To the City Supplement, DELETE in its entirety and SUBSTITUTE with the following:

a) Trench marker tape shall be 6" wide and consist of a minimum 5.0 mil, five-ply 100% virgin polyethylene which is acid, alkaline and corrosion resistant. Elongation properties and tensile strength of not less than 7,800 psi shall be in accordance with ASTM D882-80A. The trench marker tape for water lines shall have a minimum 20 gauge solid aluminum foil core, adhered to a 2.55 mil polyethylene backing.

b) Tape color and legend shall be placed beneath the top protective layer subject to the following:

1. Blue with "Caution Potable Water Line Buried Below" for Water mainlines and over pipe sleeves.

2. Purple with "Caution Recycled/Reclaimed Water Line Buried Below" for recycled water irrigation mainlines.

3. Red with "Caution Electric Line Buried Below" for electrical lines servicing the irrigation system, including, but not limited to, 110/220v power to irrigation controllers and pumps, communication cables and irrigation direct burial control wires to remote control valves.

4. Green with "Caution Sewer Line Buried Below" for Sewer mainlines and over pipe sleeves.

SECTION 300 – EARTHWORK

300-1.4 **Payment.** To the City Supplement, paragraph (2), DELETE in its entirety and SUBSTITUTE with the following:

2. Payment for existing pavement removal and disposal of up to 12" thick, within the excavation e.g., trench limits, shall be included in the Bid item for installation of the mains or the Work item that requires pavement removal.

SECTION 701 – WATER POLLUTION CONTROL

701-11 **Post-Construction Requirements.** To the City Supplement, second paragraph, ADD the following:

Comply with the following post-construction requirements:

1. Storm Water Conveyance System Stamping and Signage

2. Flow Through Planters (5)

SECTION 703 – ENCOUNTERING OR RELEASING HAZARDOUS SUBSTANCES

703-20 **Payment.** To the City Supplement, Item 1, DELETE in its entirety and SUBSTITUTE with the following:

1. Payment for waste management shall be included in the applicable Bid items as follows:

   a) Preparation of Hazardous Waste Management Plan and Reporting (LS).

   b) Monitoring, Testing, Sampling, Site Storage, and Handling of Soils Containing RCRA Hazardous Waste (TON).

   c) Loading, Transportation, and Disposal of soils containing RCRA Hazardous Waste (TON).

   d) Monitoring of Petroleum Contaminated Soil (HR).

   e) Testing, Sampling, Site Storage and Handling of Petroleum Contaminated Soil (TON).

   f) Loading, Transportation, and Disposal of Petroleum Contaminated Soil (TON).

   g) Monitoring, Testing, Sampling Site Storage and Handling of Soils Containing Non-RCRA Hazardous Waste (TON).

   h) Loading, Transportation, and Disposal of Soils Containing Non-RCRA Hazardous Waste (TON).

i) Testing, Sampling, Site Storage, Handling, Transportation, and Disposal of Containerized RCRA Hazardous Waste (55 Gal DRUMS).

j) Testing, Sampling, Site Storage, Handling, Transportation, and Disposal of Containerized Non-RCRA Hazardous Waste (55 Gal DRUMS).

k) Testing, Sampling, Site Storage, Handling, Transportation and Recycling/Disposal of Universal Waste (EACH).

l) Testing, Sampling, Site Storage, Handling, Transportation and Recycling/Disposal of Regulated Waste (TON).

m) Testing, Sampling, Site Storage, Handling, Transportation, and Disposal of RCRA Hazardous Waste contamination from the treatment of contaminated ground water (GAL).

n) Testing, Sampling, Site Storage, Handling, Transportation, and Disposal of Non-RCRA Hazardous Waste contamination from the treatment of contaminated ground water (GAL).

SECTION 705 – WATER DISCHARGES

705-2.6.1 General. Paragraph (3), CORRECT reference to Section 803 to read "Section 703."

705-2.6.3 Community Health and Safety Plan. To the City Supplement, DELETE in its entirety and SUBSTITUTE with the following:

705-2.6.3 Community Health and Safety Plan. See 703-2, "Community Health and Safety Plan."

SECTION 707 – RESOURCE DISCOVERIES

ADD:

707-1.1 Environmental Document. The City of San Diego Environmental Analysis Section (EAS) of the Development Services Department has prepared California Development Permit and Site Development Permit for South Mission Beach Lifeguard Station, as referenced in the Contract Appendix. You must comply with all requirements of the California Development Permit and Site Development Permit, Permit Number 6-11-044 as set forth in the Contract Appendix A.

Compliance with the City's environmental document is included in the various Bid items, unless a bid item has been provided.

END OF SUPPLEMENTARY SPECIAL PROVISIONS (SSP)

TECHNICALS

PROJECT MANUAL

South Mission Beach Lifeguard Station

TABLE OF CONTENTS

DIVISION 1	**GENERAL REQUIREMENTS**
01 02 50	Measurement and Payment
01 31 00	Project Coordination
01 32 00	Submittal Requirements Schedule
01 33 00	Shop Drawings, Product Data & Samples
01 74 00	Cleaning
DIVISION 2	**EXISTING CONDITIONS**
02 14 00	Dewatering
02 41 19	Demolition
02 46 10	Steel Sheet Piling
DIVISION 3	**CONCRETE**
03 11 00	Concrete Formwork
03 20 00	Concrete Reinforcement
03 30 00	Cast-in-Place Concrete
03 30 53	Site Concrete
DIVISION 4	**MASONRY**
04 22 00	Concrete Unit Masonry
DIVISION 5	**METALS**
05 50 00	Metal Fabrication
05 52 00	Exterior Handrails and Guardrails
DIVISION 6	**WOOD, PLASTICS AND COMPOSITES**
06 10 00	Rough Carpentry
06 18 00	Glue Laminated Structural Units
06 20 00	Finish Carpentry
06 61 18	Solid Surface Quartz Countertops
06 64 00	Translucent Resin Panel System
DIVISION 7	**THERMAL AND MOISTURE PROTECTION**
07 11 00	Waterproofing/Dampproofing
07 19 00	Water Repellants and Anti- Graffiti System
07 21 16	Building Insulation
07 22 17	Roof Board Insulation
07 23 03	Building Blanket Insulation
07 26 23	Below Grade Waterproofing
07 27 23	Thermal Barriers
07 44 56	Fiber-Cement Panels
07 54 00	Adhered PVC Membrane Roofing
07 62 00	Sheet Metal
07 71 05	Copper Flashing and Trim

07 72 00 Roof Accessories
07 92 00 Joint Sealers

DIVISION 8 OPENINGS
08 16 13 Fiberglass Doors and Frames
08 31 00 Access Doors
08 33 26 Overhead Sectional Doors
08 41 00 Aluminum Storefront System
08 71 00 Door Hardware
08 71 01 Finish Hardware Schedule
08 81 00 Glazing
08 91 00 Louvers and Vents

DIVISION 9 FINISHES
09 06 00 Interior + Exterior Color and Material Schedule
09 29 00 Gypsum Drywall
09 30 00 Tile
09 51 00 Acoustical Ceiling
09 51 50 Acoustical Panel Ceiling
09 91 00 Painting

DIVISION 10 SPECIALTIES
10 01 01 Miscellaneous Specialties
10 14 00 Signage
10 21 16 Solid Plastic Toilet Partitions and Screens
10 28 13 Toilet Room Accessories
10 28 19 Shower Doors
10 44 13 Fire Extinguishers, Cabinets and Accessories
10 51 26 Plastic Lockers
10 75 16 Flag Pole

DIVISION 11 EQUIPMENT
11 31 00 Kitchen and Laundry Equipment

DIVISION 12 FURNISHINGS
12 24 13 Roll up Shades

DIVISION 13 SPECIAL CONSTRUCTION
NOT USED

DIVISION 14 CONVEYING SYSTEMS
NOT USED

DIVISION 21 FIRE PREVENTION
21 13 05 Fire Protection Coordination
21 13 13 Fire-Suppression Piping

DIVISION 22 **PLUMBING**
22 05 02 Basic Plumbing Requirements
22 05 03 Basic Plumbing Materials and Methods
22 05 23 General Duty Valves for Plumbing Piping
22 05 53 Plumbing Identification
22 07 00 Plumbing Insulation
22 11 16 Domestic Water Piping
22 11 19 Domestic Water Piping Specialties
22 13 16 Sanitary Waste And Vent Piping
22 13 19 Drainage Piping Specialties
22 33 00 Electric Domestic Water Heaters & Accessories
22 40 00 Plumbing Fixtures

DIVISION 23 **HEATING, VENTILATING, AND AIR CONDITIONING**
23 05 02 Basic HVAC Requirements
23 05 03 Basic HVAC Materials and Methods
23 05 49 HVAC Vibration and Seismic Controls
23 05 53 Identification for HVAC Piping and Equipment
23 05 93 Testing, Adjusting, and Balancing
23 07 00 HVAC Insulation
23 09 16 Automatic Temperature Controls
23 31 13 Metal Ducts
23 33 00 Duct Accessories
23 34 00 Power Ventilators
23 37 13 Diffusers, Registers, and Grilles
23 75 13 Rooftop Air Conditioners
23 81 27 Split-system Air-conditioning Units
23 81 50 Corrosion Resistant Coating

DIVISION 25 **INTEGRATED AUTOMATION**

DIVISION 26 **ELECTRICAL**
26 05 00 Electrical Design & Fire Alarm System

DIVISION 27 **COMMUNICATIONS**
NOT USED

DIVISION 28 **ELECTRONIC SAFETY AND SECURITY**
---------- Fire Alarm System - See 26 05 00

DIVISION 31 **EARTHWORK**
31 10 00 Site Clearing
31 22 00 Grading
31 23 00 Excavating, Backfilling, Compacting
31 35 25 Articulating Concrete Block System

DIVISION 32 **EXTERIOR IMPROVEMENTS**
32 12 00 Asphaltic Concrete Paving
32 17 23 Pavement Markers

DIVISION 33 **UTILITIES**
33 10 00 Water Distribution Systems
33 30 00 Sanitary Sewer System
33 40 00 Site Drainage

SECTION 01 02 50 - MEASUREMENT AND PAYMENT

PART 1 - GENERAL

1.1 DESCRIPTION

A. This section defines the Lump Sum Prices, Unit Prices (Not Used), and Allowances listed in the Bid Schedule, and the manner in which they will be used to determine measurement and payment for all items included in the Bid Schedule. Parts 2 and 3 of this section describe the procedures required to be followed for monthly progress payments to the CONTRACTOR.

B. Payment for all items of the Bid Schedule whether lump sum or unit price shall include all compensation to be received by the CONTRACTOR for furnishing all tools, equipment, supplies, and manufactured articles, and for all labor, operations, and incidentals appurtenant to the items of WORK being described, as necessary to complete the various items of the WORK all in accordance with the requirements of the Contract Documents, including all appurtenances thereto, and including all costs of permits and cost of compliance with the regulations of public agencies having jurisdiction, including Safety and Health Requirements of the California Division of Industrial Safety and the Occupational Safety and Health Administration of the U.S. Department of Labor (OSHA). No separate payment will be made for any item that is not specifically set forth in the Bid Schedule, and all costs shall be included in the prices named in the Bid Schedule for the various items of WORK.

C. Final payment for WORK covered by Unit Prices will be made on the basis of the actual measured quantities accepted by the RESIDENT ENGINEER multiplied by the Unit Price of the Bid Schedule.

D. Monthly pay requests are due on the 6th of each month, and while pay requests will be accepted prior to this date, pay request processing will not begin until this date for purposes of meeting the City's pay request processing obligations under the California Public Contract Code. Failure of the CONTRACTOR to submit his pay request by this day may be cause for the rejection of the pay request. If rejected, the CONTRACTOR may have to resubmit his pay request the next month. Should the submittal date fall on a holiday or weekend day during the month then the CONTRACTOR shall consider the next working day as the due date.

1.2 BID PROPOSAL

A. **Lump Sum Prices:** The CONTRACTOR shall provide Lump Sum Prices in the Bid Schedule for all WORK in the Contract Documents, except items of WORK listed in the Contract as Unit Priced Items. For Lump Sum items, only the total amount need be filled in.

B. **Unit Price Items:** Unit Price Items are provided by the OWNER for additive or deductive WORK not presently identified in the Contract Documents. In the appropriate places on the Bid Schedule each Bidder shall quote Unit Prices for the items of WORK in the units stated when no unit price is provided on the Bid Schedule. Each unit price, whether additive or deductive, shall cover all costs and

charges, including, without limitation, the costs of material, fabrication, delivery, installation or application, supervision, bond and insurance charges, overhead, profit, and taxes. Unit Prices shall be the exact amount per unit to be applied to the units of WORK actually provided or not provided for the purpose of modifying the Contract Price or establishing the payment due the CONTRACTOR, as applicable. Unit Prices provided by the OWNER shall be held good and in effect until the WORK is completed and accepted by the OWNER. CONTRACTOR proposed Unit Prices which are so unbalanced as to be detrimental to the OWNER'S interest may be rejected or cause rejection of the Bidder's entire bid, at the discretion of the OWNER.

C. **Allowance Items:** Allowance Item amounts are provided by the OWNER to cover the cost of additive WORK not presently identified in the Contract Documents. Payment for Allowance Items will be made only when authorized as described in Part 1.3, below.

D. **Retention:** Payment for all bid items is subject to the retention provisions of the General Conditions.

E. Schedule: All scoped Allowance Bid Items and Unit Priced Bid Items are included in the scope of the Contract without specific locations for the WORK provided. The OWNER reserves the right to direct that these scoped items of WORK be performed when they are encountered, and the CONTRACTOR is obligated to accommodate this WORK within the original contract duration. The CONTRACTOR will not be entitled to additional time regardless of where the WORK is encountered.

F. The OWNER reserves the right to vary the total contract price by 25% by varying the Unit Price quantities and authorized Allowance amounts within their respective individual limits.

G. Stipulated or Bid Unit Prices - When the OWNER'S use of a Unit Price Bid Item exceeds 200% of the Bid Item quantity, the CONTRACTOR or OWNER may demand that the Unit Price Item be renegotiated for quantities in excess of the 200%, whether the price is stipulated or bid. This provision is to prevail over any conflicting general condition provision.

H. Quantities for each item in the Bid Schedule will be used to analyze the bids and determine contract award.

I. **Specified Items and Stipulated Prices**: The stipulated price for these items cannot be invoiced until the item is complete and accepted by the RESIDENT ENGINEER.

1.3 MEASUREMENT AND PAYMENT

A. **General:** This article defines the manner and method to develop the Lump Sum, Unit Price, and Allowance bid amounts of all items identified in the Bid Schedule. Bid amounts will include all plant, equipment, tools materials, labor, service, and all other items required to complete the WORK included in the Contract unless specifically excluded by this section. WORK required for which no separate bid item is identified will be considered as a subsidiary obligation of the CONTRACTOR, and the cost therefore shall be included in the most applicable bid item. Compensation for

completion of the WORK will be determined by use of the cost loaded CPM schedule. Bid amounts for each item will be the basis for development of budget values for activities included in the cost loaded CPM schedule as described in the Contract Documents. Unit Price and Allowance Bid Item amounts will also be adjusted by a Change Order to the contract amount when WORK is completed, and actual authorized quantities and Allowance amounts are established. The allowable variation in quantities is identified in each Unit Price Bid Item.

B. **Contract-Required WORK**

1. Bid Item No. 1 – Bonds (Lump Sum):

Refer to the GREENBOOK and City Supplement section 2-4, "Contract Bonds."

The Bid item for bonds includes full compensation for actual costs of payment and performance bonds. You may submit a request for payment of actual invoiced costs up to the bid amount, but not to exceed 2.5% of the Contract Price, not less than 10 Working Days after Award of Contract.

If the Bid item for bonds exceeds actual invoiced costs, any such differential amount up to the bid amount, must be paid as a part of the Final Payment.

2. Bid Item No. 2 –Building Permits (Allowance):

Refer to City Supplement section 7-5, "Permit, Fees, and Notices."

Payment for the Building Permit Allowance will be based on the actual expenditures and for pre-authorized items of the Work in accordance with the Contract Documents. The unused portions of the allowance will revert to the City upon Acceptance.

No measurement will be made for this item. Payment for Work under this bid item will be made only to the extent that such Work is specifically authorized in advance by the Engineer.

3. Bid Item No. 3 - Mobilization (Lump Sum):

Refer to City Supplement section 9-3.4.1.

Payment for all mobilization will be made at the lump sum price named in the Bid Schedule under Item No. 3. The price shall constitute full compensation for all mobilization associated with construction activities for CONTRACTOR- required by the Contract Document and/or site conditions.

4. Bid Item No. 4 - Construction of South Mission Beach Lifeguard Station and related site improvements. (Lump Sum):

The lump sum payment for the Construction of South Mission Beach Lifeguard Station and related site improvements shall be considered full compensation for furnishing, constructing and completion of all facilities,

demobilization, insurance, supervision, planning, design, and engineering fees, complete as defined within these Contract Documents.

5. Bid Item No. 5 - Water Pollution Control Program Development (Lump Sum):

Refer to City Supplement section 701-13.9.5.

6. Bid Item No. 6 - Water Pollution Control Program Implementation (Lump Sum):

Refer to City Supplement section 701-13.9.5.

7. Bid Item No. 7 – Field Orders - (Allowance):

Refer to City Supplement section 9-3.5.

No measurement will be made for this item. Payment for WORK under this bid item will be made only to the extent that such WORK is specifically authorized in advance by the Engineer.

Determining the price for miscellaneous field orders will be done in accordance with the Contract Document provisions.

8. Bid Item No. 8 – Furniture, Fixtures and Equipment (Allowance):

No measurement will be made for this item. Payment for WORK under this bid item will be made only to the extent that such WORK is specifically authorized in advance by the Engineer.

Prices for this WORK will be negotiated. This item is considered incidental to the Contract and may be adjusted or deleted in its entirety.

9. Bid Item No. 9 – Roof Specialty Inspection (Allowance):

Refer to Technical section 07 54 00.

No measurement will be made for this item. Payment for WORK under this bid item will be made only to the extent that such WORK is specifically authorized in advance by the OWNER.

Prices for this WORK will be negotiated. This item is considered incidental to the Contract and may be adjusted or deleted in its entirety.

10. Bid Item No. 10 – Buried Rip Rap Rock Removal (Allowance):

No measurement will be made for this item. Payment for WORK under this bid item will be made only to the extent that such WORK is specifically authorized in advance by the OWNER.

Prices for this WORK will be negotiated. This item is considered incidental to the Contract and may be adjusted or deleted in its entirety.

11. Bid Item No. 11 – Dewatering (Lump Sum):

Refer to Technical section 02 14 00 and City Supplement section 705-2.7.

No measurement will be made for this item. Payment for WORK under this bid item will be made only to the extent that such WORK is specifically authorized in advance by the OWNER.

Prices for this WORK will be negotiated. This item is considered incidental to the Contract and may be adjusted or deleted in its entirety.

12. Bid Item No. 12 – Special Inspections (Allowance):

Refer to GREENBOOK and City Supplement section 4-1.3.4.

No measurement will be made for this item. Payment for WORK under this bid item will be made only to the extent that such WORK is specifically authorized in advance by the OWNER.

Prices for this WORK will be negotiated. This item is considered incidental to the Contract and may be adjusted or deleted in its entirety.

13. Bid Item No. 13 – SDG&E Service Fee, Dry Utilities Connections (Allowance):

Payment for the SDG&E Service Fee Allowance will be based on the actual expenditures and for pre-authorized items of the Work in accordance with the Contract Documents. The unused portions of the allowance will revert to the City upon Acceptance.

No measurement will be made for this item. Payment for Work under this bid item will be made only to the extent that such Work is specifically authorized in advance by the Engineer.

PART 2 - PRODUCTS

2.1 GENERAL PROGRESS PAYMENT REQUIREMENTS

A. Payment for WORK performed shall be in accordance with the Cost Loaded CPM. The RESIDENT ENGINEER will verify measurements and quantities. Each activity necessary to manage and complete the WORK is identified on the contract schedules. Each activity will be assigned its respective value, a portion of the contract price, as shown on the Summary of Values.

B. Payment for all lump sum costs and services incurred on this Contract shall be based on the earned value of WORK accomplished during the reporting period. Earned value is determined by the completion percentage of each

activity applied to the total value of the activity. No construction activity shall be deemed 100% complete until the CONTRACTOR has completed the physical check out and inspection of the completed WORK and has submitted the signed inspection form to the RESIDENT ENGINEER.

C. Unit price items will be paid based on quantities (or equivalent quantities) installed.

D. Earned value is derived from the current status of the CONTRACTOR Construction Schedule as determined by the monthly schedule status submittals . Each schedule status submittal is reviewed and approved by the RESIDENT ENGINEER prior to the CONTRACTOR obtaining approval for the Summary of Earned Values or quantities installed and the Application for Payment.

E. The CONTRACTOR shall not take advantage of any apparent error or omission on the Drawings or Specifications, and the RESIDENT ENGINEER shall be permitted to make corrections and interpretations as may be deemed necessary for fulfillment of the intent of the Contract Documents at no additional cost to the OWNER.

F. The retainage specified in the contract shall apply to all payments to the CONTRACTOR including permits and mobilization.

2.2 APPLICATION FOR PAYMENT

A. Application for payment shall be on the OWNER's form provided by the RESIDENT ENGINEER and certified by signature of an Authorized Officer of the CONTRACTOR. Three (3) copies of the application for payment shall be submitted. Application shall be made monthly.

B. The Application for Payment contains all necessary references and attachments that substantiate the invoice for progress payment, (e.g., certified payrolls, labor reports, progress schedule data, and Summary of Earned Values). It must be preceded or accompanied by schedule and status data in accordance with the Contract Document provisions.

C. The Application for Payment is submitted according to the format and instructions provided by the OWNER and covering the WORK completed through the last day of the previous month or through the date established by the RESIDENT ENGINEER.

PART 3 - EXECUTION

3.1 MONTHLY REVIEWS/APPLICATION FOR PAYMENT

A. Monthly review meetings between the CONTRACTOR and the RESIDENT ENGINEER will be held within 7 days prior to the payment application date designated by the RESIDENT ENGINEER. Prior to the monthly review meeting, the CONTRACTOR will submit the Master Record Documents as identified in the Contract Document provisions, an updated schedule and a signed application for

payment showing a Summary of Earned Values for the reporting and payment period so that the RESIDENT ENGINEER can compare earned values to available status data. The CONTRACTOR shall make any adjustments to the Master Record Documents, updated schedule, and payment applications deemed necessary. Upon completion of the adjustments the RESIDENT ENGINEER will sign the payment request and forward it to the OWNER. The RESIDENT ENGINEER will determine payment amounts if agreement with the CONTRACTOR is not reached.

3.2 PAYMENT FOR PRODUCTS STORED ON SITE

A Refer to City Supplement section 9-3.3.1.1.

B. The CONTRACTOR may request payment for products (material and/or equipment) which will be incorporated into the WORK and which are delivered and stored on-site. Payments for products stored at the site shall be based upon the cost of all acceptable materials and equipment not incorporated in the WORK but delivered and suitably stored at the site; provided each such individual item has a value of more than $5000 and will become a permanent part of the WORK. The Application for Payment shall also be accompanied by a bill of sale, invoice, or other documentation warranting that the CONTRACTOR has received the materials and equipment free and clear of all liens, charges, secured interests, and encumbrances and evidence that the materials and equipment are covered by appropriate property insurance as specified in the insurance provisions and other arrangements to protect the OWNER'S interest.

3.3 PARTIAL PAYMENTS FOR MATERIALS STORED OFF SITE

A. Refer to City Supplement section 9-3.3.1.2.

B. The CONTRACTOR may request partial payment for Products (material and/or equipment), which will be incorporated into the WORK and which are delivered and stored off-site. Any payments approved pursuant to this sub-section shall not exceed sixty-five percent (65%) of the Product's invoiced value and shall be subject to retainage as set forth in the General Conditions. The OWNER reserves the right to refuse approval for payment for any Equipment or Materials suitably stored off-site in its sole discretion, regardless of whether all conditions contained herein have been met.

C. Partial payment may be made for Products eligible for off-site delivery and storage only upon presentation by the CONTRACTOR of a Bill of Sale, an Invoice or an Affidavit certifying that the material is received by the CONTRACTOR free and clear of all liens, encumbrances and secured interests of any kind, and including, for off-site delivery, evidence acceptable to the OWNER that "all-risks" property insurance in an amount sufficient to protect the interests of the OWNER is in effect at the approved site, and that the OWNER is a loss payee and an additional insured.

D. Partial payment for Products delivered and stored off-site shall be contingent upon CONTRACTOR'S compliance with the storage and protective maintenance requirements set forth in the Contract Document provisions and all other

requirements necessary to preserve equipment warranties for the benefit of the OWNER.

E. All costs associated with delivery to and storage at an off-site facility shall be assumed by the CONTRACTOR notwithstanding the CONTRACTOR'S request for and the obtaining from the OWNER approval to so deliver and store the materials.

F. CONTRACTOR shall provide written evidence to the OWNER of having made arrangements for unrestricted access by the OWNER and its authorized representatives to the materials wherever stored, including provision for the OWNER to take control and possession of such materials at any time and without restriction.

G. CONTRACTOR must provide the OWNER, upon request and prior to any partial payment, documentation which transfers absolute legal title to such materials to the OWNER conditional only upon receipt of final payment. Neither such transfer of title nor any partial payment shall constitute acceptance by the OWNER of the materials, nor void the right to reject materials subsequently found to be unsatisfactory, or in any way relieve the CONTRACTOR of any obligation arising under the Contract Documents.

END OF SECTION 01 02 50

SECTION 01 31 00 - PROJECT COORDINATION

PART 1 - GENERAL

1.1 ADMINISTRATION AND SUPERVISION:

1.1.1 Coordination:

1.1.1.1 The Contractor shall consult the contract documents, the field layouts of the various trades, their shop drawings and applicable manufacturer's brochures and instructions, and he shall coordinate all phases of the work described and affected by these documents. The Contractor shall be responsible for the accurate location and layout of all chases, pipe sleeves and openings in the construction required to accommodate the work of all the trades, and with work by separate contractors (if any) and by the City.

1.1.1.2 Existing Utility and Drainage Lines:

1.1.1.2.1 The contract documents show all known utility and drainage lines existing on the site of the work. The Contractor shall review record drawings from the City for existing conditions. Location of said lines is in accordance with information furnished to the Architect by the City. Responsibility for locating, uncovering and protecting of said lines shall rest solely with the Contractor, who shall lay out and arrange their operations in such a way as to insure that safe conditions are maintained for the entire construction period. Any interruptions of service shall be coordinated with the Resident Engineer and authorities having jurisdiction.

1.1.1.2.2 Contractor shall send proper notices, make all necessary arrangements and provide all other services required in care and maintenance of all public utilities including, but not limited to, street lights, traffic signals, street signs, hydrants, man-holes, mains, catch basins, valve boxes, poles, guys, and other appurtenances. Contractor shall assume all responsibility concerning same for which Owner may be liable.

1.1.1.2.3 Enclosing or boxing in, for protection of any public utilities equipment, shall be done by Contractor. Upon completion of work, Contractor shall remove all enclosures, fill in all openings in concrete or masonry, grout same watertight, and leave in a finished condition.

1.1.1.2.4 Arrange for disconnection of all water pipes, sewers, gas lines, electrical services, telephone wires and all similar work. The Contractor shall be certain that those utilities which will not be used in the new construction, or will not be used beyond an established point are not in use at the time of demolition or removal. If existing active services are not indicated but are encountered and require protection or relocation, request the

Resident Engineer and the Architect, in writing, for decision or disposition. DO NOT PROCEED until written instructions are obtained from proper authorities.

1.1.1.3 Divisions of the Specifications:

1.1.1.3.1 These specifications are divided for convenience into sections as set forth in Technical Table of Contents of the specifications.

1.1.1.3.2 Schedules of work included in these sections are given for convenience and shall not be considered as a comprehensive list of items necessary to complete the work of any section.

1.1.1.3.3 Where devices or items, or parts thereof are referred to in the singular, it is intended that such reference shall apply to as many such devices, items or parts as are required to properly complete the work.

1.1.1.3.4 Where the specifications are divided into two or more sections, the Contractor shall coordinate the work covered in each section with the work of other sections. The necessary information and the items, accessories, anchors, connections, patterns, templates, etc., shall be delivered when required, in order to prevent any delay in the progress and completion of the work.

1.1.1.3.5 Items or parts of work specified shall constitute a responsibility of the Contractor, regardless of where they are located in the specifications. The Resident Engineer and the Architect will not make decisions on jurisdiction or responsibilities of subcontractors.

1.1.1.4 Errors and Omissions: Should there be omissions or discrepancies found to exist between the drawings and specifications or any parts of either, or should language of any part of the contract prove to be ambiguous or doubtful, the Contractor shall notify the Architect, who will decide as to the true intent and meaning. Should the Contractor fail to give such notification in writing and proceed with the work so affected without receiving proper instructions from the Resident Engineer and the Architect, the Contractor shall do so at their own risk, and the Contractor shall remove and replace the work so as to be in compliance with the Resident Engineer and the Architect's instructions. The costs of replacing said work and of any damages or defects which result shall be paid by the Contractor.

1.1.1.5 Oral Modifications: It shall be distinctly understood that no oral statement of any person shall be allowed in any manner to modify any of the contract provisions. Changes shall be made only on written authorization of the Engineer except in an emergency endangering life or property.

1.1.1.6 Transmittal: Any notice from one party to the other under the contract shall be in writing, and shall be dated and signed by the party giving such notice, or by duly authorized representative of such party.

1.1.2 Survey/Recording:

1.1.2.1 General: The Contractor shall employ, at contractor's own expense, a registered civil engineer or licensed land surveyor working from established lines and levels at or near project site, establish and maintain dependable markers for lines and levels of the work, including markers for each story of construction. Calculate dimensions and measure for layout of work; do not scale the drawings. Maintain surveyor's log of layout work. It is the Contractors option to utilize the services from the engineer who generated the construction documents at the Contractor's expense. Record deviations (if any) from drawing information on existing conditions, and review with the Resident Engineer and the Architect/Engineer at time of discovery.

1.1.3 Preparation for Installation:

1.1.3.1 Installer Inspections: Require installer of each major unit of work to inspect substrate and conditions for installation, and to report (in writing) unsatisfactory conditions. Subcontractor's shall notify Contractor in writing of unacceptable substrate conditions to correct unsatisfactory conditions before proceeding. Inspect each product immediately before installation. Once a contractor or subcontractor proceeds or installs over defective or nonsuitable substrate conditions, it is now the responsibility of the Contractor to correct all work. Do not install and/or install over damaged or defective products, materials or equipment.

1.1.3.2 Pre-Installation Conference: Prior to starting installation of each major component of the work, hold a pre-installation conference, attended by each entity involved or affected by planned installation. Include technical representatives of product manufacturers and others recognized as expert or otherwise capable of influencing success of the installation.

1.1.3.2.1 The Contractor to provide 7-day notification of the date and time of each meeting to the Resident Engineer and the Architect so they can attend if they desire. In any event, the Contractor shall document minutes of the meetings and provide copies to the Resident Engineer and the Architect.

1.1.3.2.2 Review significant aspects of requirements for the work. Record discussion and distribute as plan of action.

1.1.3.3 Installation, General:

1.1.3.3.1 Comply with manufacturer's instructions and recommendations to extent printed information is more detailed or stringent than requirements contained directly in contract documents.

1.1.3.3.2 Timing: Install work during time and under conditions which will ensure best possible results, coordinated with required inspection and testing.

1.1.3.3.3 Anchor work securely in place, properly located by measured line and level, organized for best possible uniformity, visual effect, operational efficiency, durability, and similar benefit to Owner's use. Isolate non-compatible materials from contact, sufficiently to prevent deterioration.

1.1.3.3.4 Mount individual units of work at industry-recognized mounting heights, if not otherwise indicated; refer uncertainties to the Resident Engineer and the Architect/Engineer before proceeding.

1.1.3.3.5 Contractor shall coordinate and provide protection of dissimilar metals coming in contact with one another. Contractor shall provide adequate barriers (size, type and method prior approved by the Resident Engineer and the Architect prior to installation) to prevent electrolysis and/or breakdown of adjacent metals.

1.1.3.3.6 Contractor shall notify the Resident Engineer and the architect and coordinate for an opportunity to review the site installation of fixtures, boxes, controls, etc. for electrical, tel/com, a/v, and sprinkler piping/heads prior to close up within the finish wall and ceiling/floor assemblies.

1.1.4 Inspection Paid For By the Contractor.

1.1.4.1 Contractor must employ and pay for the services of a qualified inspection agency to perform specialty inspection services as required by the Contract Documents.

1.1.4.2 Special Inspection.

1. Special inspection and testing by the Special Inspectors must meet the minimum requirements of the building codes specified in the Contract Documents.

2. Each Special Inspector must be certified by the City's Development Services Department (DSD) prior to performing any duties. Special Inspectors must carry approved identification, as stipulated by the DSD, when performing the function of a Special Inspector.

3. Special Inspection and testing by the Special Inspectors must meet the minimum requirements of the prevailing Codes and by DSD and referenced at: http://www.sandiego.gov/development-services/industry/special.shtml

4. Contractor Responsibilities:

A. You must notify the Special Inspector prior to performing any item of

Work that requires Special Inspection and must review the Contract Documents and perform any necessary preparatory Work at the Site.

B. You are responsible for providing the Special Inspector access to Plans and Specifications at the Project's Site.

C. You are responsible for retaining at the Site all Special Inspection records submitted by the Special Inspector and providing these records for review by the Development Services Department inspector upon request.

D. You must not perform any items of Work that requires Special Inspection without the presence of the Special Inspector(s) during the performance of that Work. Work requiring continuous inspection performed without Special Inspection is subject to removal.

E. You must employ a sufficient number of Special Inspectors to assure inspection of all Work requiring Special Inspection without hindering the progress of the Work.

F. Special Inspector must comply with all requirements of the Development Services Department and the building permit.

G. Upon completion of task requiring Special Inspection, you must submit to the Engineer all Special Inspection reports that certify that the Work requiring Special Inspection has been completed in accordance with the Contract Documents and the applicable building codes and approved by the Engineer and DSD.

5. Duties and responsibilities of the Special Inspector. Contractor must ensure the following requirements are met by the Special Inspectors employed by the Contractor.

   A. The Special Inspector is not authorized to do any of the following:

      a) Inspect or approve any items of Work for which the building permit has not been issued.

      b) Inspect or approve any items of Work before the DSD has made the initial inspection. Deviations from this procedure must be requested in writing from the DSD.

      c) Inspect or approve any items of Work other than that for which they are specifically certified.

      d) Accept alternate materials, structural changes, or revisions to Plans.

   B. The Special Inspector must observe the Work for conformance with the DSD approved Plans and Specifications. Shop Drawings, Working Drawings, or both may be used only as an aid to inspection.

Special Inspections must be performed on a continuous basis, meaning that the Special Inspector must be on site at all times observing the Work requiring Special Inspection.

C. Periodic inspections, if any, must have prior approval by the DSD based on a separate written plan prepared by you and reviewed and approved by the DSD and the Engineer.

D. The Special Inspector must bring nonconforming items to your immediate attention and note all such items in the daily report. If any item is not resolved in a timely manner or is about to be incorporated in the Work, the Special Inspector must immediately notify the DSD (by telephone or in person), notify the Engineer, and post a discrepancy notice.

E. On request, each Special Inspector must complete and sign both the Special Inspection record and the daily report form for each daily inspection to remain at the Site with you for review by the Engineer, DSD's inspector.

F. The Special Inspector or inspection agency must furnish weekly reports of tests and inspections directly to the Engineer, DSD and others as designated on the Plans, permits or in these specifications. These reports must include the following:

a) Description of daily inspections and tests made with applicable locations;

b) Listing of all nonconforming items;

c) Report on how nonconforming items were resolved or unresolved as applicable; and

d) Itemized changes authorized by the Engineer and DSD if not included in nonconformance items.

G. The Special Inspector must submit a final signed report to the Engineer and DSD stating that Work requiring Special Inspection and testing were inspected, tested and reported, and to the best of Special Inspector's knowledge, is in conformance with the approved drawings and Contract Documents, approved revisions and the applicable workmanship provisions of the building codes whichever is in effect on the permitted Plans. Items not in conformance, unresolved items or any discrepancies in inspection coverage (i.e., missed inspections, periodic inspections when continuous was required, etc.) must be specifically itemized in this report.

H. Final inspection of the structure will not be scheduled until the final report for all Work items requiring Special Inspection have been reviewed and approved by the Engineer and DSD.

1.1.5 Cleaning and Protection:

1.1.5.1 General: For each element of work, provide sufficient maintenance and protection during construction to ensure freedom from damage and deterioration and clean each element of work thoroughly at time of substantial completion.

PART 2 - PRODUCTS (Not applicable)

PART 3 - EXECUTION (Not applicable)

END OF SECTION 01 31 00

SECTION 01 32 00 - Submittal Requirements Schedule

PART 1 - GENERAL

1.1 SUMMARY:

The work includes the preparation and submission of samples, shop drawings and product data as specified herein and in the various sections of these specifications. The requirements specified herein are in addition to any requirements for samples and shop drawings, product data materials lists, substitutions of materials, or other submittals specified elsewhere in these specifications. The Conditions of the Contract and the other sections of Division 1 apply to this section as fully as if repeated herein.

PART 2 - DEFINITIONS:

2.1 As used herein, the term "manufactured" applies to standard units usually mass-produced; and "fabricated" means items specifically assembled or made out to selected materials to meet individual design requirements.

PART 3 - SUBMITTAL SCHEDULE

Spec. Section Number	**Spec. Section Title**	**Subject**
02 14 00	Dewatering	Detailed Plan
		Schedule
		Executed Permits
02 41 19	Demolition	Dust control
		Noise contrrol
		Schedule of selective demolition activities
		Pre-demolition photographs
02 46 10	Steel Sheet Piling	Shop drawings
		Product data
		Test reports
03 11 00	Concrete Formwork	Product Data - Forming Panels, Form ties, spreaders, and coating
		Shop Drawings
		Placement schedule
		Samples
03 20 00	Concrete Reinforcement	Shop drawings
		Product data
03 30 00	Cast-in-Place Concrete	Product data
		Mix design
		Joint locations
		Test reports
03 30 53	Site Concrete	Samples, product data, test reports, and material certificates

Spec. Section Number	Spec. Section Title	Subject
04 22 00	Reinforced Concrete Masonry Units	Samples/mock-up
		Product data
05 50 00	Metal Fabrication	Product data
		Shop drawings
		Welding procedures/qualification records
05 73 16	Cable Railing Systems	Product data
		Shop drawings
		Samples
		Structural analysis data, qualification data, and certificates
06 10 00	Rough Carpentry	Wood treatment data
		Calculations and drawings (pre-fabricated wood components)
06 18 00	Glued Laminated Structural Units	Product data
		Shop drawings
		Samples
06 20 00	Finish Carpentry	Product data
		Wood treatment data
		Dip treatment data
		Shop drawings
06 61 18	Quartz Countertop	Shop drawings
		Samples
		Product and maintenance data
06 64 00	Translucent Resin Panel System	Product and maintenance data
		Test reports
		Shop drawings
		Samples
		Mock-up
07 11 00	Waterproofing	Product data
		Letter of certification for installation
07 19 00	Water Repellents	Product data (construction & fab, install reqs, test reports)
		Quality control submittals
07 21 16	Building Insulation	Product data
07 22 17	Roof Board Insulation	Product data
		Samples
		Shop drawings
		Certificates
07 23 03	Building Blanket Insulation	Product Data
		Samples
07 26 23	Below-Grade Waterproofing	Product data
		Mock-up
07 27 23	Thermal Barrier	Product data
		Shop drawings
		Certification

Spec. Section Number	Spec. Section Title	Subject
07 44 56	Fiber-Cement Panels	Product Data
		Samples
07 54 00	Adhered PVC Membrane Roofing	Samples
		Certifications
		Product data
07 62 00	Sheet Metal	Shop drawings
07 71 05	Copper Flashing and Trim	Product data
		Samples
		Shop drawings
07 72 00	Roof Accessories	Product data
		Shop drawings
07 92 00	Joint Sealers	Product data
		Samples
		Certificates
08 16 13	Fiberglass (FRP) Doors and Frames	Product data
08 31 00	Access Doors	Shop drawings
		Manufacturers literature
08 33 26	Sectional Overhead Doors	Product data
		Shop drawings
		Certificates
		Operation and maintenance data
08 41 00	Aluminum Storefront System	Shop drawings
		Samples
		Test reports
		Sealant manufacturers acceptance
08 71 00	Door Hardware	Hardware sets product data
08 81 00	Glazing	Product data
		Samples
		Certificate of compliance
08 91 00	Louvers and Vents	Product data
09 29 00	Gypsum Drywall	Product data
09 30 00	Tile	Product data
		Samples
		Shop drawings
09 51 00	Acoustical Ceilings	Product data
		Samples
		Shop drawings
09 51 50	Acoustical Ceiling Panels (Cementitious Wood Fiber Ceilings)	Product data
		Samples

Spec. Section Number	Spec. Section Title	Subject
		Certificates
09 91 00	Painting	Product data
		Samples and Mock-ups
10 01 01	Miscellaneous Specialties	Product data
		Shop drawings
		Samples
10 14 00	Signage	Shop drawings
10 21 16	Solid Plastic Toilet Compartments and Screens	Shop drawings and product data
		Samples
		Certification
10 28 13	Toilet Room Accessories	Product data
10 28 19	Shower Doors	Product data
		Samples
		Certificates
10 44 13	Fire Extinguishers, Cabinets, and Accessories	Product data
		Color selections
10 51 26	Plastic Lockers	Product data
		Samples
		Shop drawings
10 75 16	Flag Pole	Shop drawings
		Product data
11 31 00	Kitchen and Laundry Equipment	Product data
12 24 13	Roll-up Shades	Product data
		Samples
		Colors
		Mock-up
21 13 05	Fire Protection Coordination	Shop drawings
		Design calculations
21 13 13	Fire-Suppression Piping	Product data
		Shop drawings
		Fire-hydrant flow test report
		Field test reports and certificates
22 05 03	Basic Plumbing Materials and Methods	Product data
		Certificates
22 05 23	General Duty Valves for Plumbing Piping	Product data
		Valve Tag List
22 05 53	Plumbing Identification	Product data
		Samples
		Valve numbering and schedules
22 07 00	Plumbing Insulation	Product data
22 11 16	Domestic Water Piping	Product data
		Water Samples
		Quality control test reports

Spec. Section Number	Spec. Section Title	Subject
22 11 19	Domestic Water Piping Specialties	Product data
		Shop drawings
		Quality control test reports
22 13 16	Sanitary Waste and Vent, Storm and Storm Overflow Piping	Product data
		Shop drawings
		Quality control test reports
22 13 19	Drainage Piping Specialties	Manufacturer seismic qualification certification
		Quality control test reports
		Product data
		Shop drawings
22 33 00	Electric Domestic Water Heaters & Accessories	Product data
		Shop drawings
		Product certificates
		Manufacturer seismic qualification certification
		Quality control test reports
22 40 00	Plumbing Fixtures	Product data
		Shop drawings
23 05 03	Basic HVAC Materials and Methods	Product data
		Certificates
23 05 49	HVAC Vibration and Seismic Controls	Product data
		Shop drawings
		Welding certificates
		Air-mounting system performance certification
		Manufacturer seismic qualification certification
23 05 53	Identification for HVAC Piping and Equipment	Product data
		Samples
		Valve numbering and schedules
23 05 93	Testing, Adjusting, and Balancing	Qualification data
		Examination report
		Strategies & procedures plan
		Certified TAB reports
		Sample TAB report forms
23 07 00	HVAC Insulation	Product data
		Shop drawings
		Installer certificates
		Material test reports
		Quality control inspection reports
23 09 16	Automatic Temperature Controls	Product data
		Shop drawings

Spec. Section Number	Spec. Section Title	Subject
23 31 13	Metal Ducts	Shop drawings
		Welding certificates
		Quality control test reports
		Product data
23 33 00	Duct Accessories	Product data
23 34 00	Power Ventilators	Product data
		Shop drawings
		Quality control test reports
23 37 13	Diffusers, Registers, and Grilles	Product data
23 75 13	Rooftop Air Conditioners	Product data
		Shop drawings
		Manufacturer seismic qualification certification
		Quality control test reports
23 81 27	Split-System Air Conditioning Units	Product data
		Shop Drawings
23 81 50	Corrosion Resistant Coating	Product data
26 05 00	Electrical	Materials list
		Shop drawings
		Product data
		Samples
31 35 25	Articulating Concrete Block (ACB) - Revetment System	Manufacturer's hydraulic testing and calculations
		Manufacturer's certificates of compliance
		Product data
		Shop drawings
32 12 00	Asphaltic Concrete Paving	Product data/mix design
32 17 23	Pavement Markings	Product data
33 10 00	Water Distribution System	Product data
		Shop drawings
		Test reports
33 30 00	Sanitary Sewage System	Product data/materials list
		Test reports
33 40 00	Site Drainage	Product data/materials list
		Test reports

This represents a summary schedule only and does not relieve the Contractor from the complete list of specific items as identified in the individual Specification Sections.

END OF SECTION 01 32 00

SECTION 01 33 00 - SHOP DRAWINGS, PRODUCT DATA & SAMPLES

PART 1 - GENERAL

1.1 SUMMARY:

The work includes the preparation and submission of samples, shop drawings and product data as specified herein and in the various sections of these specifications. The requirements specified herein are in addition to any requirements for samples and shop drawings, product data materials lists, substitutions of materials, or other submittals specified elsewhere in these specifications. The Conditions of the Contract and the other sections of Division 1 apply to this section as fully as if repeated herein.

PART 2 - DEFINITIONS:

2.1 As used herein, the term "manufactured" applies to standard units usually mass-produced; and "fabricated" means items specifically assembled or made out to selected materials to meet individual design requirements.

PART 3 - GENERAL SUBMITTAL PROCEDURES

3.1 SCHEDULING:

Submit samples, shop drawings, and product data in accordance with the schedule specified in Section 01 32 00 but in no event later than 120 days after Notice to Proceed. Extension of Contract time will not be granted because of the Contractor's failure to make timely submittals. Do not purchase materials or equipment or begin work covered by the required submittals until submittals have been reviewed and returned.

3.2 TRANSMITTAL:

Accompany each submittal with a dated, signed and sequence numbered transmittal on City Product Transmittal forms. Include all information required by this form including project identification, name and address of Contractor and of subcontractor or supplier, a list of items included in the submittal, and identification of drawing numbers, specification section and paragraph numbers to which the submittal pertains, and space for Contractor's review and approval stamp.

3.3 CHECK OF RETURNED SUBMITTALS:

Check the submittals returned for correction and ascertain if the corrections result in extra cost above the included under the Contract Documents, and give written notice within five days if, in Contractor's opinion, such extra cost results from corrections. By failing to so notify or by starting any Work covered by a submittal, Contractor waives all claims for extra costs resulting from required corrections.

PART 4 - SAMPLES

4.1 Furnish for review, samples of the various materials, together with the finish thereon, as specified for and intended to be used on or in the work. Samples shall be sent to the office of the Resident Engineer . The Resident Engineer will distribute the samples, when approved.

4.2 Submit all samples to the Resident Engineer for review before purchasing, fabricating, applying or installing such materials and finishes. The Resident Engineer and the Architect will review and take action on samples within twenty (20) working days of the Contractor's submission. All actions will be by the Resident Engineer and the Architect in writing.

4.3 Submit all samples, other than field samples, in sets of four. A covering letter shall accompany the sample and shall list all items being transmitted, designating their particular usage and location in the project and shall be identified as to manufacturer, trade name, style, model, etc. Two approved samples shall be returned to the Contractor with one returned set to maintain at the project site for purposes of quality control comparisons. Provide sample cabinet at job site for storage of returned samples. The Resident Engineer and the Architect each will retain one set of samples.

4.4 Approval of a sample shall not be taken in itself to change or modify any contract requirement. All materials, finishes, and workmanship in the completed building shall be equal in every respect to that of the approved sample.

4.5 Unless otherwise specified, samples shall be 8"x10" in size and shall be limited in thickness to a minimum consistent with sample analysis. In lieu thereof, the actual full size item may be submitted.

4.6 Samples of value may be returned to the Contractor for use in the project after review, analysis, comparison and/or testing as may be required by the Architect, provided that the location is recorded and the samples bear temporary identification as samples.

4.7 Field samples shall be prepared at the site by the Contractor as specified in the various sections of these Specifications. Affected finished work shall not be commenced until the Architect has given written approval for the field samples.

PART 5 - SHOP DRAWINGS AND PRODUCT DATA

5.1 SHOP DRAWINGS:

The term "shop drawings" as used herein includes fabrication and installation, layout and setting drawings; wiring and control diagrams; and other drawings. Refer to City Supplement section 2-5.7.4.

5.1.1 The Contractor shall check and verify all field measurements and shall submit for review, with such promptness as to cause no delay in his own work or in that of any other contractor or subcontractor, all shop or setting drawings and schedules required for the work of the various trades. Shop drawings shall be prepared at the Contractor's expense and shall be sent to the office of the Resident Engineer and the Architect.

5.1.2 Drawings shall show all information required by the applicable Technical Section and shall be in sufficient detail as may be required to show that fabricated materials, equipment or systems, and the positions thereof conform to the Contract Documents.

5.1.3 Shop drawings shall establish the actual detail of all fabricated items, indicate proper relation of adjoining work, amplify design details of mechanical and

electrical equipment in proper relation to physical spaces in the structure, and incorporate minor changes of design or construction to suit actual conditions. Shop drawings shall be drawn to scale and shall be completely dimensioned.

5.1.4 Composite Shop Drawings and Field Layouts: Prepare and submit composite Shop Drawings and field layouts as required to solve tight field conditions and when required to coordinate the Work of several trades. Include dimensioned plans, elevations, sections, and details and give complete information particularly as to kinds and types of materials and equipment, size and location of sleeves, inserts, attachments, chases, openings, conduits, ducts, boxes, and structural interferences. Coordinate these composite Shop Drawings and field layouts in the field for proper relationship to Work of applicable trades based on field conditions. Contractor shall have competent personnel readily available for coordinating, checking, and supervision of field layouts. The procedures for submittals and resubmittals, and final distribution shall be as specified for Shop Drawings.

5.1.5 Prepare shop drawings on sheet of same size as project drawings or on 8-1/2" x 11" three-hole punched vellum-type sheets suitable for both reproduction.

5.1.6 Each shop drawing shall have a title block containing the following information:

5.1.6.1 Name and location of the project.

5.1.6.2 Name and address of the Contractor.

5.1.6.3 Name and address of the subcontractor, manufacturer, supplier or distributor as applicable.

5.1.6.4 Name and address of Owner.

5.1.6.5 Date, scale of drawings and identification number.

5.1.6.6 Space for the Contractor's review and approval stamp.

5.1.7 Grouping of Submittals

Unless otherwise specifically permitted by the Architect, make all submittals in groups containing all associated items. Architect may reject partial submittals as not complying with the provisions of the contract documents.

5.1.8 Submit one electronic file set of each shop drawing only for the Resident Engineer and the Architect’s action. The Resident Engineer will distribute as required for Consultant review/comment.

5.1.9 The Resident Engineer and the Architect will review and take action on shop drawings within twenty (20) working days of the Contractor's submission. All actions will be by the Resident Engineer and the Architect in writing.

5.2 PRODUCT DATA:

The terms "product data" as used herein includes manufacturer's standard drawings,

certificates of conformance, substantiating calculations and other data. Refer to City Supplement section 2-5.7.4.

5.2.1 The data shall include all information required by the applicable technical section and shall be in sufficient detail to show that manufactured materials and equipment conform to the Contract Documents.

5.2.2 Catalog Cuts: Clearly mark each copy to indicate the product or model as well as all optional sizes, finishes or other features proposed for use. Delete all inapplicable data.

5.2.3 Submittal Preparation: Submit one electronic file set of each product data for the Resident Engineer and the Architect's action.

5.2.4 The Resident Engineer and the Architect will review and take action on product data within twenty (20) working days of the Contractor's submission. All actions will be by the Resident Engineer and the Architect in writing.

5.3 ARCHITECT'S ACTION:

The Resident Engineer and the Architect will review the submittals with reasonable promptness and will affix initials or signature as follows:

5.3.1 Submittals stamped "REVIEWED" require no further action and fabrication and/or construction may proceed. The Resident Engineer and the Architect will stamp and return to the Contractor, the transparency and one copy of shop drawings and one marked copy and four unmarked copies of brochures, schedules, materials lists, and other product data, except where required otherwise.

5.3.2 Submittals stamped "FURNISH AS CORRECTED" require no further action and fabrication and/or construction may proceed contingent upon all corrections being made as noted. Quantities returned to be as specified in paragraph 5.3.1.

5.3.3 Submittals stamped "REJECTED" or "REVISE AND RESUBMIT" or "SUBMIT SPECIFIED ITEM" require the Contractor to resubmit them with reasonable promptness and no fabrication or construction may begin. The Resident Engineer and the Architect will stamp and return to the Contractor; the transparency of shop drawings and one marked copy and four unmarked copies, of brochures, schedules, materials lists, and other product data.

5.3.4 Resubmittals: If first or subsequent submittal is stamped "REJECTED" or "REVISE AND RESUBMIT", corrective action shall be taken and resubmittal procedure shall be same as for first submittal. The Contractor shall direct specific attention in writing, by highlighting, by clouding, or in some matter clearly noting on resubmitted shop drawing corrections as to revisions requested and also revisions other than the correction requested by the Resident Engineer and the Architect on previous submissions.

5.3.5 Distribution Copies: The Contractor shall be responsible for obtaining required prints and for distribution to Subcontractors. All distribution copies of shop drawings shall be made from the drawings bearing the Resident Engineer and the

Architect's stamp. Maintain one copy of all submittals at the project site.

5.4 The Resident Engineer and the Architect will check and take action on such drawings and schedules only for conformance with the design concept of the project and compliance with information given in the contract documents. When so directed by the Resident Engineer and the Architect, the Contractor shall make any and all corrections required.

5.5 The shop drawings, product data and supporting data shall be prepared by the Contractor or his suppliers and subcontractors, but shall be submitted as the instruments of the Contractor.

5.6 The Contractor shall check the drawings of his suppliers and subcontractors as well as his own drawings before submitting them. In particular, the Contractor shall ascertain that the drawings meet all requirements of the contract drawings and specifications, and conform to the structural and space conditions. If such shop drawings show variations from contract documents, whether because of standard shop practice or other reasons, the Contractor shall clearly describe such variations including other changes required to correlate the work in his letter of transmittal.

5.7 Shop drawings, product data and samples, when submitted to the Resident Engineer and the Architect for review, shall be accompanied by a written statement signed by the Contractor, that the shop drawings, product data, and samples have been checked by him and found to be in accordance with the contract drawings and specifications, and that proper provision has been made to accommodate all abutting work. This statement may be in the form of an approval stamp bearing the Contractor's (superintendent) signature. Submittals shall be rejected if Contractor fails to take appropriate action prior to submission.

5.8 Substantiating calculations, when specified, shall be prepared and signed by a California registered civil or structural engineer, employed by the Contractor.

5.9 The Resident Engineer and the Architect's review of submittals will be general only and shall not relieve the Contractor from responsibility for errors of any sort, for deviations from drawings or specifications, or for conflict with the work of others that may result from such deviations. The Resident Engineer and the Architect's review of a separate item does not indicate a review of an assembly in which the item functions.

END OF SECTION 01 33 00

SECTION 01 74 00 - CLEANING

PART 1 - GENERAL

1.1 RELATED DOCUMENTS & DESCRIPTION OF WORK:

The work includes the furnishing of all labor, materials, equipment, and services, and performing all operations necessary for, and properly incidental to, clean up during construction and final cleaning of the building prior to acceptance by the Owner, including waxing and polishing as specified herein and in other sections when specified. The other sections of Division 1 apply to this section as fully as if repeated herein.

1.2 CLEAN UP DURING CONSTRUCTION:

1.2.1 It is required that the entire site be kept in a neat and orderly condition, especially near existing buildings in operation during construction, and the Resident Engineer and the Architect may, at any time during construction, order a general clean up of the site as a part of the work under this section.

1.2.2 Dispose of waste, trash, and debris in a safe, acceptable manner, in accordance with applicable laws and ordinances and as prescribed by authorities having jurisdiction. Bury no such waste material and debris on the site. Burning of trash and debris on the site will not be permitted.

1.2.3 Location of dump for trash and debris and length of haul is the Contractor's responsibility.

1.3 FINAL CLEANING OF BUILDING:

Prior to final inspection by the Resident Engineer and the Architect, and after all construction work is essentially complete, thoroughly clean the building, utilizing professional building cleaners. Items to be cleaned include, but are not limited to: all glass, plastic, doors, opening frames, grilles, trim, exposed non-ferrous metal surfaces, floor covering, light fixtures and plates, plumbing fixtures and trim, and all finish surfaces throughout the construction. Thoroughly remove ink trademarks from laminated plastic surfaces. Vacuum-clean the building and remove all spots, smears, dust, debris, hand prints and defacements of every sort, including those of vandals. Follow the recommendations of the manufacturer of the materials and items to be cleaned for all cleaning, polishing and treatment such as waxing.

1.4 FINAL SITE CLEAN UP:

Also prior to final inspection, thoroughly clean the entire construction site and put it into a neat, acceptable condition. Remove from the entire site all construction waste and unused materials, loose rock and stones, excess earth, roots, weeds, and all debris of any description resulting from the work. Hose down and scrub where necessary all new and existing concrete and asphalt pavement and walks dirtied as a result of the work. Thoroughly remove mortar droppings from concrete walks and other pavements.

PART 2 - PRODUCTS (Not applicable)

PART 3 - EXECUTION (Not applicable)

END OF SECTION 01 74 00

SECTION 02 14 00 – DEWATERING

PART 1 – GENERAL

1.1 SUMMARY

This Section covers the requirements for dewatering as necessary to control and lower groundwater levels and hydrostatic pressures to permit excavation and construction to be performed properly under dry conditions as specified below.

Dewatering operations shall be adequate to assure the integrity of the finished project. The responsibility for conducting the dewatering operation in a manner, which will protect adjacent structures and facilities, rests solely with the contractor. The cost of repairing any damage to adjacent structures and restoration of facilities shall be the responsibility of the contractor.

The contractor will bear the sole responsibility for the design, installation, and operation of the dewatering system to comply with the requirements of this section and local, state, and federal regulations regarding dewatering operations and disposal of dewatering waters.

The contractor shall be required to install additional dewatering equipment as may be required throughout the duration of the project to maintain specific groundwater levels.

1.2 SITE INSPECTION AND LOCATION OF EXISITNG ON-SITE UTIITIES

A. Prior to all work of this section, carefully inspect the entire site and all existing items to be demolished and removed or to be left intact, and determine an orderly sequence for the performance of this work. Exact locations and alignment of existing buried utility lines are not known. Locate all existing utility lines and determine the requirements for disconnection and capping. Locate all active utilities traversing the area of work to be retained and determine the requirements for protection.

B. Locate all overhead utilities and power lines and determine height restrictions. Do not operate equipment in the vicinity of overhead utilities and power lines, which may create a safety hazard.

1.3 PROTECTION

A. The contractor shall notify **DIG ALERT at 1-800-227-2600** at least two days prior to starting work and shall coordinate all work with utility company representatives. The existence and locations of existing underground facilities shown on the drawings were obtained from a search of available records. The contractor shall take precautionary measures to protect any existing facility shown on the drawings, and any other which is not of record or not shown on the drawings. The Contractor shall determine the exact location of all existing utilities before commencing the work, and shall be fully responsible for any and all damages, which might be occasioned by the Contractor's failure to exactly locate and preserve any and all underground utilities.

B. The contractor shall pothole all existing utilities at all crossing points and points of connection. The Contractor shall record exact horizontal and vertical locations of all pot-holed underground facilities. Notify the Owner of any conflicts or differences

from positions indicated on the drawings. If potholes do not reveal the location of certain existing utilities, or if potholes reveal locations of existing utilities other than expected, the Contractor shall notify the Owner in writing, and shall not proceed further until the Owner provides direction.

C. Protection and Restoration of Surface: Protect newly graded areas from traffic, erosion, and settlements. Repair and reestablish damaged or eroded slopes, elevations or grades and restore surface construction prior to acceptance. Provide appropriate erosion control and sediment control measures to prevent water-borne soil from leaving the site. The contractor shall be responsible to use the most appropriate Best Management Practices as necessary to ensure pollution and/or illegal discharges of storm water and non-storm water do not occur from the site. The contractor shall be responsible to clean up any soil deposited in the public right-of-way, public or private storm drain systems, creeks/ streams/lakes/ponds and other surface waters, flood control facilities, or on adjacent properties. The contractor shall be responsible to protect storm drain catch basins and to prevent sediment from entering the public or private storm drain system during construction.

1.4 RELATED WORK IN OTHER SECTIONS

The following work specified in other sections applies to the work of this Section, including but not limited to:

A. Section 31 23 00 – EXCAVATION, BACKFILLING AND COMPACTING

B. Division 1 Specifications

1.5 SAFETY DURING CONSTRUCTION

The Contractor shall assume sole and complete responsibility for job site conditions during the course of construction of the project, including safety of all persons and property. This requirement shall be made to apply continuously and not be limited to normal working hours. Refer to General Provisions for additional requirements.

1.6 SCHEDULE AND PLAN

A. The following shall be submitted in compliance with Division 1.

1. The contractor shall make an independent investigation of the soil and groundwater conditions at the site(s). The results of the contractor's independent investigation shall include the results of any and all exploratory borings, laboratory test and analyses. The contractor's independent investigation shall be in report form.

2. Prior to commencement of excavation, a detailed plan and schedule, with description, for dewatering of excavations, piezometers, estimated dewatering rates, volume and equipment requirements shall be submitted with the dewatering plan. The plan shall be signed and sealed by a California Registered Geotechnical Engineer, Engineering Geologist or Hydro-geologist with experiences of at least one dewatering operation of similar magnitude and complexity in a recently completed construction project. The

qualification of the dewatering system designer shall be submitted to the construction manager for approval. The contractor shall make an independent investigation of the soil conditions to be dewatered. The dewatering plan shall be prepared specifically to accommodate soil materials and groundwater conditions of the site.

3. Demonstration of proposed system and verification that adequate personnel, materials, and equipment are readily available, including standby equipment.

4. A copy of the executed permits for discharging effluent waters.

1.7 CONTROL AND OBSERVATION

A. Adequate control shall be maintained to ensure that the stability of excavated and constructed slopes are not adversely affected by water, that erosion is controlled, and that flooding of excavation or damage to structures does not occur.

B. Where critical structures or facilities exist immediately adjacent to areas of proposed dewatering, reference points shall be established and observed daily to detect any settlement that may develop.

C. A daily report shall be maintained recording the following:

1. Groundwater elevations of ground water and piezometric water levels in observation wells (if any).

2. Change in elevation of reference pints as stated in subsection 1.8 to detect settlement in adjacent structures. Construction manager may suspend work if any settlement exceeds **0.05 feet**.

D. After dewatering is discounted, a weekly report shall be maintained for two months recording:

1. Change in elevation of reference points as stated in subsection 1.8 to detect settlement in adjacent structures.

1.8 INSPECTION

A. During or after trench excavation, when the contractor observes sufficient groundwater to be present that may prevent proper installation of pipe bedding, pipelines, backfill, and compaction, then contractor shall call for inspection of conditions by the construction manager. The construction manager shall inspect the conditions and determine if unacceptable conditions are present for pipe installation.

B. If the construction manager finds unacceptable trench conditions, then the contractor will be authorized to mobilize and start dewatering operations of the pipeline trench.

C. Damp soils of low volumes of groundwater in the bottom of trenches are not sufficient cause for trench dewatering.

1.9 PERMITS

A. The contractor shall obtain all required permits for discharging effluent waters.

B. The contractor shall be responsible for all costs associated with obtaining all proper permits and for maintaining permit compliance, including all costs associated with permit violations.

C. The contractor shall be responsible for all costs associated with the discharge of dewatering effluent into the sanitary sewer system of the local jurisdictional agency.

D. Storm water runoff flowing into the excavation shall be minimized to the maximum extent possible. All water entering the excavation shall be subject to all dewatering requirements specified in his document.

E. Protection of adjacent structures from adverse effects of dewatering shall be the responsibility of the contractor.

PART 2 – PRODUCTS

2.1 EQUIPMENT

A. Dewatering, where indicated, includes deep wells, well points, piezometers, sump pumps, temporary pipelines for water disposal, and rock or gravel placement, and other means including standby pumping equipment maintained in the jobsite continuously.

2.2 FOUNDATION ROCK

A. Foundation rock shall be included in the dewatering system to replace weakened soil within the excavation. Rock shall be **1 ½ inch** maximum crushed stone placed in minimum **12-inch layers** and completely wrapped in filter fabric. Foundation rock shall be used in addition to bedding material shown on the plans and specifications, and it shall be used at the contractor's discretion, or as directed by the construction manager. Foundation rock shall be considered to be part of the dewatering system.

PART 3 – EXECUTION

3.1 GENERAL

A. The contractor shall notify **DIG ALERT at 1-800-227-2600** at least two days prior to starting work and shall coordinate all work with utility company representatives. The existence and locations of existing underground facilities shown on the drawings were obtained from a search of available records. The contractor shall take precautionary measures to protect any existing facility shown on the drawings, and any other which is not of record or not shown on the drawings.

B. The contractor shall pothole all existing utilities at all crossing points and points of connection. The contractor shall record exact horizontal and vertical locations of all pot-holed underground facilities. Notify the Owner of any conflicts or differences from positions indicated on the drawings. If potholes do not reveal the location of certain existing utilities, or if potholes reveal locations of existing utilities other than

expected, the Contractor shall notify the Owner in writing, and shall not proceed further until the Owner provides direction.

C. All water encountered in the excavation shall be disposed of by the contractor in such a manner as will not damage public or private property or create a nuisance or health nuisance. The contractor shall furnish, install, and operate pumps, pipes, appliances, and equipment or sufficient capability to keep excavation free from water until the excavation is backfilled, unless otherwise authorized by the construction manager. No dewatering from inside the excavation will be permitted while the pipeline is being installed, unless the construct manager approves it.

D. Dewatering shall be performed in compliance with Subsection 306-3.3 of the SSPWC and as specified herein.

E. An independent assessment of the subsurface conditions shall be performed prior to submitting a dewatering plan. The assessment shall be signed and sealed by a California Registered Geotechnical Engineer, Engineering Geologist, or Hydro-geologist. The plan shall include, but not be limited to:

1. Additional Laboratory Explorations.

2. Laboratory Testing.

3. Pump Testing.

4. All boreholes and wells advanced by the contractor shall be logged and submitted for reviews.

F. An adequate system shall be designed, installed, and maintained to lower and control the ground water to permit excavation, construction of structures, and placement of materials to be performed under dry conditions. The system shall include two piezometers at each structure and one piezometer at the midpoint of each pipeline reach. The piezometers shall be properly installed to accurately reflect the groundwater depth adjacent to the excavation.

G. Sufficient dewatering equipment shall be installed to pre-drain the water-bearing strata below the bottom foundations, sewers, and other excavations.

H. The hydrostatic head in water-bearing data below foundations, drains, sewers, and other excavations shall be reduced to ensure that the water level and piezometric water levels are below the excavation surface at all times. The piezometric water level shall be maintained a minimum of 3 feet below the excavation surface. No excavation shall be made without proof of required lowered groundwater levels.

I. The system shall be placed into operation prior to excavation below groundwater level to lower the groundwater level and shall be operated continuously for 24 hours a day, 7 days a week, until drains, sewers, and structures have been constructed and fill materials have been placed and dewatering is no longer required. Groundwater will need to remain depressed until adequate loading from proposed structures and uplift resistance to buoyant forces can be provided. All dewatering wells, well points, and piezometers shall be installed under the supervision of a California

Registered Geotechnical Engineer, Engineering Geologist, or Hydro-geologist. The registered professional shall submit a written certificate that the system has been installed according to the dewatering plan.

J. The site shall be graded to facilitate drainage. Surface runoff shall be diverted from excavations. Water entering the excavation from surface runoff shall be collected in shallow ditches around the perimeter of the excavation and disposed of in compliance with local, state, and federal regulations.

K. Dewatering shall at all times be conducted in such a manner as to preserve the undisturbed bearing capacity of the subgrade soils at the proposed bottom of the excavation.

L. If foundations soils are disturbed or loosened by the upward seepage of water or an uncontrolled flow of water, the affected areas shall be excavated and replaced with foundation rock completely wrapped in filter fabric at no additional cost to the owner.

M. Flotation of structures and facilities shall be prevented by maintaining a positive and continuous removal of water. The dewatering system shall be in continuous operation until all excavations are backfilled.

N. If well points or wells are used, they shall be adequately spaced to provide the necessary dewatering and shall be sand packed and /or other means used to prevent pumping of fine sand or silts from the subsurface. A continual check shall be maintained to ensure that the subsurface soil is not being removed by the dewatering operation.

O. All appropriate permits shall be obtained to discharge dewatering effluent into the sanitary sewer system. Note: If the laboratory results of the independent study show groundwater contamination and constituent concentrations are above allowable discharge limits per the local jurisdiction, a treatment system shall be provided under the bid allowances.

P. The release of groundwater to its original level shall be performed in such a manner as not to disturb natural foundation soils, prevent disturbance of compacted backfill and prevent flotation or movement of structures, pipelines, and sewers.

END OF SECTION 02 14 00

SECTION 02 41 19 - DEMOLITION

PART 1 - GENERAL

1.1 SUMMARY:

1.1.1 This Section includes demolition and removal of the following:

1.1.1.1 Selected buildings or structure or portions of a building or structure.

1.1.1.2 Selected site elements.

1.1.1.3 Repair procedures for selective demolition operations.

1.1.2 See individual Sections for demolishing, cutting, patching, or relocating items.

1.2 DEFINITIONS:

1.2.1 Remove: Detach items from existing construction and legally dispose of them off-site, unless indicated to be removed and salvaged or removed and reinstalled.

1.2.2 Remove and Salvage: Detach items from existing construction and submit them to the Owner ready for reuse.

1.2.3 Remove and Reinstall: Detach items from existing construction, prepare them for reuse, and reinstall them where indicated.

1.2.4 Existing to Remain: Existing items of construction that are not to be removed and that are not otherwise indicated to be removed, removed and salvaged, or removed and reinstalled.

1.3 MATERIALS OWNERSHIP:

1.3.1 Except for items or materials indicated to be reused, salvaged, reinstalled, or otherwise indicated to remain Owner’s property, demolished materials shall become Contractor's property and shall be removed from Project site.

1.4 SUBMITTALS:

1.4.1 Submit the following as per Section 01 33 00, Submittals:

1.4.1.1 Proposed Control Measures: Submit statement or drawing that indicates the measures proposed for use, proposed locations, and proposed time frame for their operation. Identify options if proposed measures are later determined to be inadequate. Include measures for the following:

1.4.1.1.1 Dust control.

1.4.1.1.2 Noise control.

1.4.2 Schedule of Selective Demolition Activities: Indicate detailed sequence of selective demolition and removal Work, with starting and ending dates for each activity, interruption of utility services, use of elevator and stairs, and locations of temporary partitions and means of egress.

1.4.3 Predemolition Photographs: Show existing conditions of adjoining construction and site improvements that might be misconstrued as damage caused by selective demolition operations. Submit before Work begins.

1.5 QUALITY ASSURANCE:

1.5.1 Demolition Firm Qualifications: An experienced firm that has specialized in demolition work similar in material and extent to that indicated for this Project.

1.5.2 Regulatory Requirements: Comply with governing EPA notification regulations before beginning selective demolition. Comply with hauling and disposal regulations of authorities having jurisdiction.

1.5.3 Standards: Comply with the latest edition of the following:

1.5.3.1 ANSI / ASSE A10.6 - American National Standards Institute / American Society of Safety Engineers, "Safety Requirements for Demolition Operations"

1.5.3.2 NFPA 241 - National Fire Protection Association, "Standard for Safeguarding Construction, Alteration, and Demolition Operations"

1.6 PROJECT CONDITIONS:

1.6.1 Owner will occupy portions of building immediately adjacent to selective demolition area. Conduct selective demolition so that Owner operations will not be disrupted. Submit no less than 72 hours' notice to Owner of activities that will affect Owner operations.

1.6.2 Owner assumes no responsibility for condition of areas to be selectively demolished.

1.6.2.1 Conditions existing at time of inspection for bidding purpose will be maintained by the Owner as far as practical.

1.6.3 Hazardous Materials: It is not expected that hazardous materials will be encountered in the Work.

1.6.3.1 If materials suspected of containing hazardous materials are encountered, do not disturb; immediately notify the Resident Engineer and the Architect and the Owner. Hazardous materials will be removed by the Owner under a separate contract.

1.6.4 Storage or sale of removed items or materials on-site will not be permitted.

1.6.5 Utility Service: Maintain existing utilities indicated to remain in service and protect them against damage during selective demolition operations.

1.6.5.1 Maintain fire-protection facilities in service during selective demolition operations.

1.7 DAMAGE:

Should any portion of the existing site or buildings be damaged due to Contractor's operations, the Contractor shall report the conditions and circumstances to the Resident Engineer and the Architect and all necessary repairs and replacement to such damaged work shall be made at no extra cost to the Owner. All such repairs and replacements to such damaged work shall be with new materials to match existing work in every respect to meet the approval of the Resident Engineer and the Architect.

PART 2 - PRODUCTS (NOT APPLICABLE)

PART 3 - EXECUTION

3.1 EXAMINATION:

3.1.1 Verify that utilities have been disconnected and capped.

3.1.2 Survey existing conditions and correlate with requirements indicated to determine extent of selective demolition required.

3.1.3 Inventory and record the condition of items to be removed and reinstalled and items to be removed and salvaged.

3.1.4 When unanticipated mechanical, electrical, or structural elements that conflict with intended function or design are encountered, investigate and measure the nature and extent of conflict. Promptly submit a written report to the Resident Engineer and the Architect.

3.1.5 Engage a professional engineer to survey condition of building to determine whether removing any element might result in structural deficiency or unplanned collapse of any portion of structure or adjacent structures during selective demolition operations.

3.2 UTILITY SERVICES:

3.2.1 Existing Utilities: Maintain services indicated to remain and protect them against damage during demolition operations.

3.2.2 Do not interrupt existing utilities serving occupied or operating facilities unless authorized in writing by the Owner and authorities having jurisdiction. Provide temporary services during interruptions to existing utilities, as acceptable to the Owner and the authorities having jurisdiction.

3.2.2.1 Submit at least 72 hours' notice to the Owner if shutdown of service is required during changeover.

3.2.3 Utility Requirements: Locate, identify, disconnect, and seal or cap off indicated utilities serving areas to be demolished.

3.2.3.1 Arrange to shut off indicated utilities with utility companies.

3.2.3.2 If utility services are required to be removed, relocated, or abandoned, provide temporary utilities as required before proceeding with selective demolition that bypass area of selective demolition and that maintain continuity of service to other parts of building.

3.3 PREPARATION:

3.3.1 Site Access and Temporary Controls: Conduct selective demolition and debris-removal operations to ensure minimum interference with roads, streets, walks, walkways, and other adjacent occupied and used facilities.

3.3.1.1 Do not close or obstruct streets, walks, walkways, or other adjacent occupied or used facilities without permission from the Owner and authorities having jurisdiction. Provide alternate routes around closed or obstructed traffic ways if required by governing regulations.

3.3.1.2 Erect temporary protection, such as walks, fences, railings, canopies, and covered passageways, where required by authorities having jurisdiction.

3.3.1.2.1 Protect existing site improvements, appurtenances, and landscaping to remain.

3.3.2 Temporary Facilities: Provide temporary barricades and other protection required to prevent injury to people and damage to adjacent buildings and facilities to remain.

3.3.3 Temporary Enclosures: Provide temporary enclosures for protection of existing building and construction, in progress and completed, from exposure, foul weather, other construction operations, and similar activities. Provide temporary weather-tight enclosure for building exterior.

3.3.4 Temporary Partitions: Erect and maintain dustproof partitions and temporary enclosures to limit dust and dirt migration and to separate areas from fumes and noise.

3.3.5 Temporary Shoring: Provide and maintain interior and exterior shoring, bracing, or structural support to preserve stability and prevent movement, settlement, or collapse of construction to remain, and to prevent unexpected or uncontrolled movement or collapse of construction being demolished.

3.4 POLLUTION CONTROLS:

3.4.1 Dust Control: Use water mist or sprinkling, temporary enclosures, and other suitable methods to limit spread of dust and dirt. Comply with governing environmental-protection regulations.

3.4.1.1 Wet mop floors to eliminate trackable dirt and wipe down walls and doors of demolition enclosure. Vacuum carpeted areas.

3.4.2 Disposal: Remove and transport debris in a manner that will prevent spillage on adjacent surfaces and areas.

3.4.2.1 Remove debris from elevated portions of building by chute, hoist, or other device that will convey debris to grade level in a controlled descent.

3.4.3 Cleaning: Clean adjacent structures and improvements of dust, dirt, and debris caused by selective demolition operations. Return adjacent areas to condition existing before selective demolition operations began.

3.5 DEMOLITION:

3.5.1 General: Demolish and remove existing construction as indicated. Use methods required to complete the Work within limitations of governing regulations.

3.5.1.1 Neatly cut openings and holes plumb, square, and true to dimensions required. Use cutting methods least likely to damage construction to remain or adjoining construction.

3.5.1.2 Cut or drill from the exposed or finished side into concealed surfaces to avoid marring existing finished surfaces.

3.5.1.3 Do not use cutting torches until work area is cleared of flammable materials. At concealed spaces, such as duct and pipe interiors, verify condition and contents of hidden space before starting flame-cutting operations. Maintain portable fire-suppression devices during flame-cutting operations.

3.5.1.4 Locate demolition equipment and remove debris and materials so as not to impose excessive loads on supporting walls, floors, or framing.

3.5.2 Existing Facilities: Comply with Owner's requirements for using and protecting elevators, stairs, walkways, loading docks, building entries, and other building facilities during demolition operations.

3.5.3 Removed and Salvaged Items:

3.5.3.1 Clean salvaged items.

3.5.3.2 Pack or crate items after cleaning. Identify contents of containers.

3.5.3.3 Store items in a secure area until delivery to the Owner.

3.5.3.4 Transport items to the Owner’s storage area designated by the Owner.

3.5.3.5 Protect items from damage during transport and storage.

3.5.4 Removed and Reinstalled Items:

3.5.4.1 Clean and repair items to functional condition adequate for intended reuse. Paint equipment to match new equipment.

3.5.4.2 Pack or crate items after cleaning and repairing. Identify contents of containers.

3.5.4.3 Protect items from damage during transport and storage.

3.5.4.4 Reinstall items in locations indicated. Comply with installation requirements for new materials and equipment. Submit connections, supports, and miscellaneous materials necessary to make item functional for use indicated.

3.6 PATCHING AND REPAIRS:

3.6.1 General: Promptly repair damage to adjacent construction and site caused by demolition operations.

3.6.2 Repairs: Where repairs to existing surfaces are required, patch to produce surfaces suitable for new materials and to match existing finishes/materials.

3.6.2.1 Completely fill holes and depressions in existing grade or walks surfaces that are to remain with an approved patching material installed according to manufacturer's written recommendations.

3.6.3 Finishes: Restore exposed finishes of patched areas and extend restoration into adjoining construction in a manner that eliminates evidence of patching and refinishing.

3.6.4 Floors and Walls: Where walls or partitions that are demolished extend one finished area into another, patch and repair floor and wall surfaces in the new space. Provide an even surface of uniform finish color, texture, and appearance. Remove existing floor and wall coverings and replace with new materials, if necessary, to achieve uniform color and appearance.

3.7 DISPOSAL OF DEMOLISHED MATERIALS:

3.7.1 General: Promptly dispose of demolished materials. Do not allow demolished materials to accumulate on-site.

3.7.2 Burning: Do not burn demolished materials.

3.7.3 Disposal: Transport demolished materials off Owner’s property and legally dispose of them.

END OF SECTION 02 41 19

SECTION 02 46 10 – STEEL SHEET PILING

PART 1 - GENERAL

1.1 SUMMARY:

This section covers includes furnishing, transporting, and installing steel sheet piling as shown on the construction drawings.

1.2 MATERIALS:

1.2.1 Sheet Steel Piling shall conform to the requirements of ASTM Specification A 690, High-Strength Low-Alloy Nickel, Copper, Phosphorus Steel H-Piles and Sheet Piling with Atmospheric Corrosion Resistance to Use in Marine Environments. Sheet piles shall be 18" longer than specified to account for overdriving damage and cutoff.

1.2.2 Appurtenant Materials (steel plates, bars, structural shapes) shall conform with ASTM Specification A 36, Standard Specification for Carbon Structural Steel.

1.3 SUBMITTALS:

The following items shall be submitted:

1.3.1 Shop Drawings for Metal Sheet Piling

1.3.1.1 Detail drawings for sheet piling, including fabricated sections, shall show complete piling dimensions and details, driving sequence and location of installed piling. Detail drawings shall include details of top protection, special reinforcing tips, tip protection, lagging, splices, fabricated additions to plain piles, cut-off method, corrosion protection, and dimensions of templates and other temporary guide structures for installing piling. Detail drawings shall provide details of the method of handling piling to prevent permanent deflection, distortion or damage to piling interlocks.

1.3.2 Product Data – Driving

1.3.2.1 Records of the completed sheet piling operations. These records shall provide a system of identification which shows the disposition of approved piling in the work, driving equipment performance data, piling penetration rate data, piling dimensions and top and bottom elevations of installed piling.

1.3.2.2 Complete descriptions of sheet piling driving equipment including hammers, extractors, protection caps and other installation appurtenances, prior to commencement of work.

1.3.2.3. The proposed method of pulling sheet piling, prior to pulling any piling.

1.3.3 Test Reports – Materials Tests

1.3.3.1. Certified materials tests reports. Reports showing that sheet piling and appurtenant metal materials meet the specified requirements shall be submitted for each shipment and identified with specific lots prior to

installing materials. Material test reports shall meet the requirements of ASTM A 6/A 6M.

1.4 DELIVERY, STORAGE AND HANDLING:

1.4.1 Materials delivered to the site shall be new and undamaged and shall be accompanied by certified test reports. The manufacturer's logo and mill identification mark shall be provided on the sheet piling as required by the referenced specifications. Sheet piling shall be stored and handled in the manner recommended by the manufacturer to prevent permanent deflection, distortion or damage to the interlocks; as a minimum, support on level blocks or racks spaced not more than 9 feet apart and not more than 20" from the ends. Storage of sheet piling should also facilitate required inspection activities and prevent damage to coatings and corrosion prior to installation.

1.5 QUALITY ASSURANCE

1.5.1 Material Certificates

1.5.1.1 For each shipment, submit certificates identified with specific lots prior to installing piling. Identification data should include piling type, dimensions, chemical composition, mechanical properties, section properties, heat number, and mill identification mark.

1.6 EQUIPMENT

1.6.1 Submit descriptions of pile driving equipment to be employed in the work. Descriptive information includes manufacturer's name, model numbers, capacity, rated energy, hammer details, cushion material, helmet, templates, and jetting equipment.

PART 2 - PRODUCTS

2.1 METAL SHEET PILING:

2.1.1 Metal sheet piling shall be hot-rolled steel sections conforming to ASTM A 690.

2.1.1.1 Interlocks: The interlocks of sheet piling shall be free-sliding, provide a swing angle suitable for the intended installation but not less than 5 degrees when interlocked, and maintain continuous interlocking when installed.

2.1.1.2 General Requirements: Sheet piling including special fabricated sections shall be full-length sections of the dimensions shown. Fabricated sections shall conform to the requirement and the piling manufacturer's recommendations for fabricated sections.

2.2 APPURTENANT METAL MATERIALS:

2.2.1 Metal plates, shapes, bolts, nuts, rivets and other appurtenant fabrication and installation materials shall conform to manufacturer's standards and to the requirements specified in the respective sheet piling standards.

2.3 TESTS, INSPECTIONS, AND VERIFICATIONS:

2.3.1 Requirements for materials tests, workmanship and other measures for quality assurance shall be as specified.

2.3.1.1 Materials Tests: Materials tests shall conform to the following requirements. Sheet piling and appurtenant materials shall be tested and certified by the manufacturer to meet the specified chemical, mechanical and section property requirements prior to delivery to the site. Testing of sheet piling for mechanical properties shall be performed after the completion of all rolling and forming operations. Testing of sheet piling shall meet the requirements of ASTM A 6/A 6M.

PART 3 - EXECUTION

3.1 EARTHWORK:

3.1.1 Pre-excavation will be permitted. Backfill as indicated.

3.2 INSTALLATION:

3.2.1 Pile Driving Equipment: Pile driving equipment shall conform to the following requirements.

3.2.1.1 Driving Hammers: Hammers shall be electric or diesel drop, single-acting, double-acting, differential-acting or vibratory type. The driving energy of the hammers shall be as recommended by the manufacturer for the piling weights and subsurface materials to be encountered. Repair damage to piling caused by use of a pile hammer with excess delivered force or energy.

3.2.1.2 Jetting Equipment: Jetting will not be permitted.

3.2.2 Placing and Driving:

3.2.2.1 Placing: Any excavation required within the area where sheet piles are to be installed shall be completed prior to placing sheet pilings. Pilings properly placed and driven shall be interlocked throughout their length with adjacent pilings to form a continuous diaphragm throughout the length or run of piling wall.

3.2.2.1.1 Pilings shall be carefully located as shown. Pilings shall be placed plumb with out-of-plumbness not exceeding 1/4-inch per foot of length and true to line. Place the pile so the face will not be more than 6 inches from vertical alignment at any point. Top of pile at elevation of cut-off shall be within 1/2-inch horizontally and 2 inches vertically of the location indicated. Manipulation of piles to

force them into position will not be permitted. Check all piles for heave. Redrive all heaved piles to the required tip elevation.

3.2.2.1.2 Temporary wales, templates, or guide structures shall be provided to insure that the pilings are placed and driven to the correct alignment. Use a system of structural framing sufficiently rigid to resist lateral and driving forces and to adequately support the sheet piling until design tip elevation is achieved. At least two templates shall be used in placing each piling at third points. Templates shall not move when supporting sheet piling. Fit templates with wood blocking to bear against the web of each alternate sheet pile and hold the sheet pile at the design location alignment. Provide outer template straps or other restraints as necessary to prevent the sheets from warping or wandering from the alignment. Mark template for the location of the leading edge of each alternate sheet pile. If in view, also mark the second level to assure that the piles are vertical and in position. If two guide marks cannot be seen, other means must be used to keep the sheet pile vertical along its leading edge.

3.2.2.2 Driving: Pilings shall be driven with the proper size hammer and by approved methods so as not subject the pilings to damage and to ensure proper interlocking throughout their lengths.

3.2.2.2.1 Driving hammers shall be maintained in proper alignment during driving operations by use of leads or guides attached to the hammer. Caution shall be taken in the sustained use of vibratory hammers when a hard driving condition is encountered to avoid interlock-melt or damages. The use of vibratory hammers should be discontinued and impact hammers employed when the penetration rate due to vibratory loading is 300 mm or less per minute.

3.2.2.2.2 A protecting cap shall be employed in driving when using impact hammers to prevent damage to the tops of pilings. Use cast steel shoe to prevent damage to the tip of the sheet piling. Pilings damaged during driving or driven out of interlock shall be removed and replaced at the Contractor's expense.

3.2.2.2.3 Pilings shall be driven without the aid of a water jet.

3.2.2.2.4 Adequate precautions shall be taken to insure that pilings are driven plumb. Where possible, drive z-pile with the ball end leading. If an open socket is leading, a bolt or similar object placed in the bottom of the interlock will minimize packing material into it and ease driving for the next sheet. If at any time the forward or leading edge of the piling wall is found to be out-of-plumb in the plane of the wall the piling being driven shall be driven to the required depth and tapered pilings shall be provided and driven to interlock with the out-of-plumb leading edge or other approved corrective measures shall be taken to insure the plumbness of succeeding pilings. The maximum permissible taper for any tapered piling shall be 1/4" per foot of length.

3.2.2.2.5 Pilings in each run or continuous length of piling wall shall be driven alternately in increments of depth to the required depth or elevation. No piling shall be driven to a lower elevation than those behind it in the same run except when the pilings behind it cannot be driven deeper.

3.2.2.2.6 If obstructions restrict driving a piling to the specified penetration the obstructions shall be removed or penetrated with a chisel beam. If the Contractor demonstrates that removal or penetration is impractical the Contractor shall make changes in the design alignment of the piling structure as directed to insure the adequacy and stability of the structure. Pilings shall be driven to depths shown and shall extend up to the elevation indicated for the top of pilings.

3.2.2.2.7 Pre-augering or spudding of piles will not be permitted.

3.2.2.3 Cutting/Penetration of Piling:

3.2.2.3.1 The tops of pilings excessively battered during driving shall be trimmed when directed.

3.2.2.3.2 The Contractor shall cut holes in pilings for bolts, rods, reinforcing steel, drains or utilities as shown or as directed. All cutting shall be done in a neat and workmanlike manner. A straight edge shall be used in cuts made by burning to avoid abrupt nicks. Bolt holes in steel piling shall be drilled or may be burned and reamed by approved methods which will not damage the surrounding metal. Holes other than bolt holes shall be reasonably smooth and the proper size for rods and other items to be inserted.

3.2.2.4 Inspection of Driven Piling: Perform continuous inspection during pile driving. Inspect all piles for compliance with tolerance requirements. Bring any unusual problems which may occur to the attention of the Special Inspector. The Contractor shall inspect the interlocked joints of driven pilings extending above ground. Pilings found to be out of interlock shall be removed and replaced at the Contractor's expense.

3.2.2.5 Pulling: The method of pulling piling must be approved. Pulling holes shall be provided in pilings as required. Extractors shall be of suitable type and size. Care shall be exercised during pulling of pilings to avoid damaging piling interlocks and adjacent construction. Pilings shall be pulled one sheet at a time. Pilings fused together shall be separated prior to pulling unless the Contractor demonstrates that the pilings cannot be separated. The Contractor will not be paid for the removal of pilings damaged beyond structural use due to proper care not being exercised during pulling.

3.3 REMOVAL:

3.3.1 The removal of sheet pilings shall consist of pulling, sorting, leaning the interlocks, inventorying and storing previously installed sheet pilings as shown and directed.

3.3.1.1 Pulling: The method of pulling piling must be approved. Pulling holes shall be provided in pilings as required. Extractors shall be of suitable type and size. Care shall be exercised during pulling of pilings to avoid damaging piling interlocks and adjacent construction. Pilings shall be pulled one sheet at a time. Pilings fused together shall be separated prior to pulling unless the Contractor demonstrates that the pilings cannot be separated. The Contractor will not be paid for the removal of pilings damaged beyond structural use due to proper care not being exercised during pulling.

3.4 INSTALLATION RECORDS:

3.4.1 Maintain a pile driving record for each sheet pile. Indicate on the installation record: installation dates and times, type and size of hammer, rate of operation, total driving time, dimensions of driving helmet and cap used, blows required per yard for each yard of penetration, final driving resistance in blows for final 18 inches, pile locations, tip elevations, ground elevations, cut-off elevations, and any reheading or cutting of piles. Record any unusual pile driving problems during driving.

END OF SECTION 02 46 10

SECTION 03 11 00 - CONCRETE FORMWORK

PART 1 - GENERAL

1.1 RELATED DOCUMENTS AND DESCRIPTION OF WORK:

This section covers the furnishing and installing and removing of forms for cast-in-place concrete work as shown and noted on the drawings and as specified. The Conditions of the Contract and Division 1 apply to this section as fully as if repeated herein.

1.2 CODES:

1.2.1 Except as modified by the requirements specified herein or the details on the drawings, form work shall conform to the "California Building Code, CURRENT Edition, (CBC)", Chapter 19, "Concrete".

1.3 REFERENCES:

The editions of the specifications and standards referenced herein, published by the following organizations, apply to the work only to the extent specified by the reference.

1.3.1 American Concrete Institute (ACI).

1.3.2 U.S. Department of Commerce Product Standard (PS).

1.3.3 Western Wood Products Association (WWPA).

1.3.4 West Coast Lumber Inspection Bureau (WCLIB).

1.4 SUBMITTALS:

1.4.1 Submittal procedures and quantities are specified in Section 01 33 00.

A. Product Data: Submit manufacturer's specifications for forming panels, form ties, spreaders and coating for review.

B. Formwork shop drawings.

1. Building Vertical and Horizontal Panels.

2. Site Wall Vertical Panels.

3. Public Art Wall (Beach Cottages).

C. Placement schedule.

D. Samples: For each of the following materials:

1. Retain applicable subparagraphs below. Insert samples of other materials if requiredForm-facing panel.
2. Form ties.

3. Form liners.

PART 2 - PRODUCTS

2.1 MATERIALS:

2.1.1 Forms for Unexposed Concrete: Form concrete surfaces which will not be exposed in the finished structure with plywood, lumber, metal or other acceptable material.

2.1.1.1 Lumber shall be standard or better grade Douglas fir, in accordance with WCLIB "Standard Grading Rules 1981" or WWPA "Western Lumber Grading Rules 80". Boards shall be surfaced on at least 2 edges and one side for a tight fit.

2.1.1.2 Plywood shall be B-B Plyform, Class I exterior grade in accordance with PS 1-83, 5/8" minimum thickness for 12" stud spacing and 3/4" minimum thickness for 16" stud spacing.

2.1.2 Forms for Exposed Concrete: Form concrete surfaces which will be exposed in the finish structure:.

2.1.2.1 Vertical and Horizontal Pours: Panels shall be Olympic Panel Super-Matte MDO, 2-step layup panel form or equal, Class 1 exterior grade in accordance with PS 1-07. The maximum deflection of facing materials reflected in concrete surfaces exposed to view, shall be 1/240 of the span between structural members.

2.1.2.2 Public Art work (Beach Cottages): Plywood shall be Class I exterior grade in accordance with PS 1-07, 5/8" minimum thickness for 12" stud spacing and 3/4" minimum thickness for 16" stud spacing.

2.1.3 Framing, Studding and Bracing: "Standard" or "Construction" grade Douglas fir, rough or S4S, conforming to the WCLIB "Standard Grading Rules 1981" or WWPA "Western Lumber Grading Rules 80" or as required per manufacturer's recommendations for vertical and horizontal poured in place panels .

2.1.4 Form Ties and Spreaders: Fiberglass Formtie System SuperTie assembly manufactured by RJD Industries, Inc or equal, of type acting as spreaders and leaving no metal on concrete face. Exposed ties shall be ground off and/or removed per manufacturers recommendations for finished approval by the Resident Engineer and the Architect. Standard metal form clamp assembly, Wire ties, or wood spreaders will not be permitted. Form accessories shall be commercially manufactured type.

2.1.5 Nails: Common wire, steel.

PART 3 - EXECUTION

3.1 DESIGN OF FORMWORK AND SHORING:

3.1.1 The engineering and construction of all formwork, shoring, and bracing shall be

carried out by and under the direction of the Contractor, and he shall be held responsible for the engineering, construction, maintenance, and safety of all formwork during the entire construction period.

3.1.2 The formwork shall be designed for the loads and lateral pressures outlined in Part 3, Section 102, of ACI 347, and lateral forces as specified by the California Building Code.

3.1.3 Provide and install shores and centering for the work, constructed to required shape, size, and form, well braced and made rigid and capable of supporting and sustaining the loads imposed. Leave shores and centering in place until the concrete is sufficiently set to safely carry its own weight and added loads of construction.

3.2 CONSTRUCTION:

3.2.1 Earth Forms: Earth forms may be used for footings only where the soil is firm and stable and the concrete will not be exposed to view. Where earth forms are to be used, excavations shall be cut neat and accurately to size for placing of concrete directly against the excavation. Construct wood edge strips at each side of trench at top to secure reinforcing and prevent trench from sloughing. Form sides of footings where earth sloughs. Earth forms shall be tamped firm and cleaned of all debris and loose material before depositing concrete.

3.2.2 Wood Forms: Construct forms of sound material to the correct shape and dimensions, mortar tight, and of sufficient strength, and so braced and tied together that the movement of men, equipment, materials, or placing and vibrating the concrete will not throw them out of exact shape under all imposed loads. They shall be so constructed that they may be easily removed without damage to the concrete. Before concrete is placed in forms, the horizontal and vertical position of the form shall be carefully verified and all inaccuracies corrected. All wedging and bracing shall be completed in advance of placing of concrete. Board forms having joints opened by shrinkage of the wood shall be swelled until closed by wetting before concrete is placed. Seal plywood and other wood surfaces not subject to shrinkage against absorption by commercial oil or sealer, or factory applied non-absorptive liner. Utilize form coating per color manufacturers written literature for color concrete.

3.2.3 Framing bracing, supporting members, and centering shall be of ample size and strength to safely carry, without deflection, all dead and live loads to which forms may be subjected, and shall be spaced sufficiently close to prevent any bulging or sagging of forms. Concrete out of line, level, or plumb will be cause for rejection of the whole work affected.

3.2.4 Tolerances: Formwork shall be so constructed as to ensure that the concrete surfaces will conform to the tolerances of Section 203.1, ACI 347. Camber the formwork to compensate for anticipated deflections in the formwork due to weight and pressure of the fresh concrete and construction loads.

3.2.5 Chamfered Corners: All exposed corners shall be chamfered 3/4", unless noted otherwise on drawings. Provide molding in forms for all chamfering required.

3.2.6 Form Ties: Ties shall be of sufficient strength and used in sufficient quantities to prevent spreading of the forms. Ties shall be placed at least 1" away from the finished surface of the concrete, and equally spaced when exposed to view.

3.2.7 Steel Forms: When steel forms are coated to prevent bond with concrete, it shall be done prior to placing of the reinforcing steel. Do not allow excess material to stand in puddles in the forms or allow it to come in contact with concrete against which fresh concrete will be placed.

3.2.8 Joints: Construction joints, isolation joints, shrinkage control joints and expansion joints shall be installed as approved. Location of construction joints shall be coordinated with and reviewed in advance of concrete pouring.

3.2.9 Embedded Piping and Rough Hardware:

3.2.9.1 The Contractor shall afford access to every tradesman who is required to fasten his work to that of the Contractor, or who is required to insert therein any piping, box, bolt, anchor, insert sleeves or other rough hardware, with every facility for setting the same accurately in the forms.

3.2.9.2 Conduits or pipes shall be so located as not to reduce the strength of the construction and in no case shall be placed in a slab less than 3-1/2 inches in thickness except for local off-sets. No conduit buried in a concrete slab shall have an outside diameter greater than 33 percent of the thickness of the slab, and no conduit shall be placed under slab reinforcing steel, except for slab mesh. No conduits or pipes shall be placed in structural slabs, mat foundations or grade beams without written approval from structural engineer.

3.2.10 Coating of Forms: Thoroughly clean forms and coat with specified form coating before each use. Do not reuse any form for exposed work which cannot be reconditioned to "like new" condition. Apply form coating to all forms in accordance with the manufacturer's specifications. Apply form coating to all forms before placing reinforcing steel. Where as cast finishes are required, do not apply materials which will impart a stain to concrete. Where the finished surface is required to be plastered, the material applied to form surfaces shall be compatible with type of plaster to be used. If plaster is applied over concrete surfaces, use a bond breaker. Utilize form coating per color manufacturer's written literature for color concrete.

3.2.11 Inspection: Prior to placing of concrete, and after placement of reinforcing steel in the forms, provide notification so that proper inspection can be made. Such notification shall be made at least two working days in advance of placing concrete.

3.2.12 Rejection of Defective Work: Any movement or bellying of forms during construction or variations in excess of the tolerances specified will be considered just cause for the removal of such forms and, in addition, the concrete work so affected. Reconstruction of forms, new concrete and any

required reinforcing steel shall be furnished at no additional cost to the Owner.

3.3 REMOVAL OF FORMS:

3.3.1 Formwork for stem walls and other parts not supporting the weight of the concrete may be removed as soon as the concrete has hardened sufficiently to resist damage from removal operations, particularly when form ties will be bent by the removal operations, but not sooner than 24 hours after placing concrete.

3.3.2 Whenever the formwork is removed during the curing period, the exposed concrete shall be cured by one of the methods specified in Section 03 30 00.

3.3.3 Use softwood wedges to release form faces from concrete. Do not pry with metal tool.

3.3.4 Arrangement: Arrange formwork to allow proper erection sequence and to permit form removal without damage to concrete.

END OF SECTION 03 11 00

SECTION 03 20 00 - CONCRETE REINFORCEMENT

PART 1 - GENERAL

1.1 RELATED DOCUMENTS AND DESCRIPTION OF WORK:

This section covers the furnishing and installing of reinforcing steel for cast-in-place-concrete work as shown and noted on the drawings and as specified. The Conditions of the Contract and Division 1 apply to this section as fully as if repeated herein.

1.2 CODES:

Except as modified by the requirements specified herein and/or the details on the drawings, concrete reinforcing work shall conform to the "California Building Code, CURRENT Edition (CBC)", Chapter 19, "Concrete".

1.3 REFERENCES:

The editions of the specifications and standards referenced herein, published by the following organizations, apply to other work only to the extent specified by the reference:

1.3.1 American Concrete Institute (ACI).

1.3.2 American Society for Testing and Materials (ASTM).

1.3.3 Concrete Reinforcing Steel Institute (CRSI).

1.3.4 American Welding Society (AWS).

1.4 SUBMITTALS:

1.4.1 Submittal procedures and quantities are specified in Section 01 34 00.

1.4.2 Shop Drawings: Shop and placement drawings of all reinforcing shall be reviewed prior to fabrication.

1.4.2.1 Placement drawings shall show the locations and spacing of reinforcing in the various parts of the structure with details as required, all in accordance with ACI 315-80. Cutting and bending lists submitted without placement drawings will be returned without review as incomplete. Placement drawings shall be complete so that placement of the reinforcing may proceed without reference to the design drawings.

1.4.2.2 Review shall not act to relieve the Contractor from responsibility for accuracy of the fabrication details and placing diagrams. Dimensions and locations shall be verified prior to the preparation of shop drawings.

1.4.2.3 No work shall be done except from reviewed drawings which must be kept at all work locations. The Contractor shall provide all reinforcing as noted on the engineering drawings.

1.4.2.4 If there is a discrepancy between the shop drawings and the engineering drawings, the engineering drawings will take precedence.

1.4.3 Product Data: Mill affidavits, stating the grades and physical and chemical properties of the reinforcing steel, and conformance with ASTM Specifications, shall be submitted before delivery of the steel to the job site.

1.5 DELIVERY AND STORAGE:

1.5.1 Delivery: Deliver reinforcement bundled and tagged to identify placement and certify testing.

1.5.2 Reinforcing steel shall be transported to the building site, stored and covered in a manner which will insure that no damage shall occur to it from moisture, dirt, grease, or any other cause that might impair bond to concrete. A sufficient supply of approved reinforcing steel shall be stored on the building site at all times to insure that there will be no delay of the work. Identification of steel shall be maintained after bundles are broken.

1.6 COORDINATION:

Contractor shall check architectural, structural, mechanical, and electrical drawings for anchor bolt schedules and locations, anchors, inserts, conduits, sleeves, block outs, and any other items which are required to be cased in concrete, and shall make necessary provisions as required so that reinforcing steel will not interfere with the placement of such embedded items.

PART 2 - PRODUCTS

2.1 MATERIALS:

2.1.1 Reinforcing Bars: New, deformed, billet steel bars, conforming to ASTM A 615 Grade 60 coated with a protective fusion-bonded epoxy coating by electrostatic spray or other suitable method per ASTM A934.

2.1.2 Welded Wire Reinforcement: New welded steel wire reinforcement, conforming to ASTM A 497 and provided in flat sheets with a protective fusion-bonded epoxy coating by electrostatic spray or other suitable method per ASTM A884. Gauge and center-to-center spacing shall be as indicated.

2.1.3 Accessories: Reinforcement accessories, consisting of spacers, chairs, ties, and similar items shall be provided as required for spacing, assembling, and supporting reinforcement in place. Accessories shall be galvanized steel or approved plastic accessories, conforming to the applicable requirements of the CRSI Standards hereinbefore specified.

2.1.4 Tie Wire: Tie wire for reinforcement shall be #16 gauge or heavier, where noted or specified, black or galvanized steel wire, conforming to ASTM A 82.

PART 3 - EXECUTION

3.1 FABRICATION:

3.1.1 Fabrication of steel reinforcement shall be in accordance with the details shown on the drawings. Where specific details are not shown or noted, comply with the applicable requirements of CBC and ACI 315 hereinbefore specified.

3.1.2 Bars shall be accurately bent, cut and placed as indicated on the drawings. Bars shall be bent cold; heating of bars will not be permitted. Bars shall not be bent or straightened in any manner that will injure the material. Bars shall not be field bent.

3.2 PLACING:

3.2.1 General: Reinforcing steel shall be placed in accordance with the drawings and the applicable requirements of the "Codes and Standards" hereinbefore specified. Install reinforcement accurately and secure against movement, particularly under the weight of workmen and the placement of concrete.

3.2.2 Reinforcing Supports: Bars and welded wire fabric larger than 8 gauge shall be supported on metal chairs or spacers on metal hangers, accurately placed and securely fastened to steel reinforcement in place. Support legs of accessories in forms without embedding in form surface. Spacing of chairs and accessories shall conform to CRSI's "Recommended Practice for Placing Bar Supports". No wood will be permitted inside forms. Precast concrete cubes may be used to support footing and slab on grade reinforcing. Use of "hook and pull" method for slab on grade reinforcing is prohibited.

3.2.3 Placing and Tying: All reinforcing shall be set in place, spaced, and rigidly and securely tied or wired with #16 gauge steel tie wire at all splices and at crossing points and intersections in the position shown, or as directed. Point ends of wire away from forms.

3.2.4 Spacing: Bars shall be spaced as indicated on the drawings. Where not shown, the clear spacing for main longitudinal column reinforcement shall be not less than 1.5 times the nominal bar diameter, or 1-1/2 inches, or 1-1/3 times the maximum size aggregate, whichever is less. For all other parallel bars, where spacing is not shown, the minimum clear spacing shall not be less than the nominal bar diameter, or one inch, or 1-1/3 times the maximum size aggregate, whichever is less. The clear distance limitations above also apply between the bars being spliced at a contact lap splice and adjacent bars.

3.2.5 Splices: Use Class B splices as noted on Detail 9/S1.4 unless otherwise noted. Class A splices to be per Detail 9/S1.4. Stagger lapped splices by the required lap splice length minimum. Wherever possible, splices of adjacent bars shall be staggered.

3.2.6 Welded Wire Fabric: Wire fabric shall be in as long lengths as practicable and shall be wired at all laps and splices. Laps shall be one full spacing of the cross wires plus 2" at splices. Welded wire fabric shall be supplied in flat sheets. Contractor will execute care in making sure fabric is placed in the center of slab.

3.2.7 Dowels: Dowels shall be tied securely in place before concrete is deposited. In the event there are not bars in position to which dowels may be tied, No. 3 dowel minimum shall be added to provide proper support and anchorage. Bending of dowels after placement of concrete will not be permitted. Dowels extended for future construction shall be protected from weather exposure and/or as shown on the drawings. Compliance with safety law requirements for extended dowels is also required.

3.2.8 Cleaning: Reinforcement, at time of pour, shall be free of coatings that would impair bond to concrete.

3.2.9 Welding: Welding of reinforcing steel is not permitted.

3.3 TESTING AND INSPECTION:

3.3.1 Special inspection by a registered Deputy Inspector for all reinforcing steel as stated in structural drawings. Contractor shall provide notification to the Resident Engineer and the Architect at least two working days ahead of each concrete placement, and no concrete shall be placed until all reinforcing steel has been installed by the Contractor and approved by all required inspectors. All reinforcing shall be complete in every way by the end of the working day prior to concrete placing. Testing and inspections are specified in City documents

3.4 DEFECTIVE WORK:

3.4.1 Defective work shall be removed and replaced by the Contractor at no additional cost to the Owner. The examples of reinforcing steel work which will be considered defective shall include, but not be limited to the following:

3.4.1.1 Bars with kinks or bends not shown on drawings.

3.4.1.2 Bars injured due to bending or straightening.

3.4.1.3 Bars heated for bending.

3.4.1.4 Bars bent in the field.

3.4.1.5 Reinforcement not placed in accordance with the drawings or specifications.

END OF SECTION 03 20 00

SECTION 03 30 00 - CAST-IN-PLACE CONCRETE

PART 1 - GENERAL

1.1 RELATED DOCUMENTS AND DESCRIPTION OF WORK:

This section covers the furnishing and installing of cast-in-place concrete work attached and within the building as shown and noted on the drawings and as specified. The Conditions of the Contract and Division 1 apply to this section as fully as if repeated herein.

1.2 CODES:

Except as modified by the requirements specified herein and/or the details on the drawings, concrete work shall conform to the "California Building Code" **2010 edition (CBC),** Chapter 19, "Concrete".

1.3 REFERENCES:

The editions specified in the 2010 CBC and the latest editions of the specifications and standards referenced herein, published by the following organizations, apply to the work only to the extent specified by the reference:

1.3.1 American Concrete Institute (ACI).

1.3.2 American Society for Testing and Materials (ASTM).

1.4 REQUIREMENTS:

Concrete contractor shall have a minimum of 5 years of experience with similar work and shall provide a list of 5 projects of similar or greater size and complexity completed within the last 5 years along with contact names and telephone numbers. Structural engineer shall have the capability to disapprove any concrete contractor that cannot satisfactorily demonstrate competence.

1.5 SUBMITTALS:

1.5.1 Submittal procedures and quantities are specified in Section 01 33 00.

1.5.2 Product Data:

1.5.2.1 Submit certificates of compliance for Portland cement.

1.5.2.2 Submit manufacturers technical literature for admixtures, curing compounds, expansion joint filler, panel forms (vertical and horizontal), form ties, sealer and chemical hardener.

1.5.2.3 Submit concrete mix designs.

1.5.2.4 Submit plan for approval of all type joint locations.

1.5.2.5 Copies of calcium chloride test results for concrete slab vapor emissions as required/described in subsequent sections will be submitted to the Resident Engineer and the Architect, Owner, General Contractor, and Flooring Contractor.

Tests shall be performed by an independent testing agency, paid for by the General Contractor, and In conformance with ASTM F1869 (moisture) and ASTM F710 (alkalinity). Should test results indicate either moisture (greater than 5 lbs per 1,000 SF per 24 hours) or alkalinity results unacceptable with the specified products manufacturer's requirements, remedial sealing or other action shall be performed by the Contractor in a manner acceptable to the flooring manufacturer so as to not void the warranty

1.6 LABORATORY TESTS AND MIX DESIGNS:

1.6.1 General: Compression tests of concrete shall be performed by a qualified testing laboratory in accordance with Section 01 45 00, Testing and Inspections. Mill tests and manufacturer's certification of compliance with ASTM Specifications shall be submitted to the Inspector in lieu of testing of cement and aggregate analysis. Contractor shall notify the Resident Engineer and the Architect and testing laboratory 24 hours in advance of placement.

1.6.2 Compression Tests: See Testing and Inspections.

1.6.3 Mix designs shall be the responsibility of the Contractor.

1.6.3.1 Determine mix designs to fulfill the specified requirements for strength, aggregate size and workability of concrete, and such designs shall be used in proportioning all structural concrete. Mix designs shall be submitted, with three point mix design tests performed within one year of submittal, for review by Resident Engineer and Structural Engineer. Water is not permitted to be added at the jobsite unless clearly noted on the mix design.

1.6.3.2 Mix designs shall be made in accordance with ACI 211.1-81 for regular concrete.

1.6.3.3 Contractor shall provide a list of where the mix designs are to be used and curing method to be used concurrently with the designs for review.

1.6.3.4 Review shall not be considered unqualified approval, and shall not relieve the Contractor of his responsibility to furnish concrete of proper consistency and specified strengths.

1.6.3.5 All interior slabs on grade shall be tested for vapor emissions prior to installation of flooring finishes as described in subsequent sections. Three tests for first 1000 s.f. and one test per 1000 s.f. thereafter.

1.7 PROPERTIES AND PROPORTIONS:

1.7.1 Concrete:

1.7.1.1 Minimum concrete strengths at 28 days for slabs on grade shall be 4,000 psi.

1.7.1.2 Slumps: Shall be 4" range typical.

1.7.1.3 Maximum Size Aggregate: Shall be 1". In no case shall the maximum aggregate size used exceed 20% of a member's thickness, nor shall it exceed 3/4 of the clear spacing between reinforcing.

1.7.1.4 All concrete shall have a maximum Water/Cement Ratio of 0.45.

1.7.2 Grout: One part Portland cement and two parts fine aggregate by volume. Grout shall be of a consistency suitable for the intended purpose and shall be used immediately after mixing. Grout used under minor bearing plates shall be "drypack" and shall be rammed into place. Small quantities of grout may be mixed by hand, but any grout requiring one-half sack of cement, or more, per batch shall be machine mixed. Grout shall produce a 2000 psi compression strength of in 28 days unless otherwise noted.

1.7.3 Non-Shrink Grout: Non-Shrink Non-Metallic Grout shall be pre-mixed, factory-packaged, non-staining, non-corrosive, non-gaseous grout complying with ASTM C1107. Provide grout specifically recommended by manufacturer for interior and exterior applications of type specified in this section.

1.7.4 Quick setting hydraulic cement: shall be one of the following:

1.7.3.1 "Por-Rok" as manufactured by Hallemite/Lehn and Fink.

1.7.3.2 "Thorogrip" as manufactured by Thoro System Products.

1.7.3.3 "Masterflow 713" as manufactured by Master Builders.

1.7.5 Grout shall produce a 7,000 psi compression strength in 28 days unless otherwise indicated on structural drawings required at column base plates.

1.7.6 Grout Mixture for Rated FRP Door Frames: Shall be as supplied and installed per manufacturers recommendations

1.8 COORDINATION:

Contractor shall check architectural, structural, mechanical, and electrical drawings for anchor bolt schedules and locations, anchors, inserts, conduits, sleeves, block outs, and any other items which are required to be cased in concrete, and shall verify their placement before placing of concrete.

1.9 TOLERANCES:

1.9.1 All tolerances shall be as defined in ACI 117 and as specified.

1.9.2 Classification shall be per General Building: Cast-in-Place, ACI 117, Section 4.0, unless noted otherwise.

1.9.3 Depressions in slab floors between high points shall be a maximum 3/16 inch in ten feet, using a metal straight edge placed at any location on slab, and measured within 72 hours of pour.

1.10 PRE-INSTALLATION MEETING:

1.10.1 Prior to commencing the work of this section or ordering colored concrete, the contractor shall schedule and attend a meeting at the job site to discuss conformance with requirements of the Contract Documents. Request attendance of representatives from the Resident Engineer and the Architect, Engineer, Contractor, subcontractors, color manufacturers representative, and other parties who are involved.

1.11 MODIFICATIONS, SUBMITTALS AND SAMPLES:

1.3.1 Design modifications may be made only as necessary to meet field conditions and to insure the correct alignment and relationship of the work, and only as directed by the Resident Engineer and the Architect.

1.3.2 All coloring materials shall be as manufactured by L.M. Scofield, Co., Los Angeles, CA; Davis Colors, Los Angeles, CA; or approved equal.

1.3.3 Furnish samples, manufacturer's product data, test reports and material certifications as required in above referenced sections for concrete, panel forms (vertical and Horizontal), form ties, and joint fillers and sealers.

1.3.4 Sample concrete panels of not less than 16 (sixteen) square feet are to be constructed on site at a location as directed by the Architect for each type of concrete panel; building walls (vertical panel) and building floor/roof (horizontal panel) and public art work (Beach Cottages) specified. Panels are to be poured, colored (as required), and finished/textured as detailed and specified. Panels may be used as part of the final construction, if approved by the Resident Engineer and the Architect. (and Artist for the public art work - Beach Cottages).

PART 2 - PRODUCTS

2.1 MATERIALS:

2.1.1 Portland Cement: ASTM C150, Type II unless otherwise noted on drawings. Type II cement shall meet the strength requirements of Type I cement. Compressive strength per drawings.

2.1.1.1 Color for all building interior and exterior walls, and floor/ceilings shall be from a single batch of materials, Davis Colors, color: Outback.-, or approved equal, to match standard Davis Color sample - as Architects Control Sample.

2.1.2 Pozzolan: ASTM C 618, Type F or C. Limit use of pozzolan to not more than 15% of cement content by weight.

2.1.3 Regular Weight Concrete Aggregates: ASTM C 33. In lieu of the use of ASTM C

227-81 to determine alkali reactivity of the aggregates as specified therein, the alkali reactivity shall be "innocuous" as determined by ASTM C 289.

2.1.3.1 Fine aggregate shall be washed clean, shall be uniformly screen graded, and shall contain not more than 2% by weight of deleterious materials such as shale, schist, alkali, clay lumps, earth, loam, mica or similar materials. Fine aggregate shall be graded uniformly from fine to coarse.

2.1.3.2 Coarse aggregate shall consist of clean, hard, crushed rock or washed gravel, free from organic materials or soft or friable materials and shall not contain more than 2% by weight of shale or cherty material and not more than 15% by weight of elongated fragments.

2.1.3.3 Grading of combined aggregate shall be well-graded.

2.1.4 Admixtures, if used: ASTM C 494, of a type that increases workability and reduces water demand of concrete, but will not increase shrinkage. Admixture shall be subject to approval as to type and amount used. Admixtures shall contain not more than one percent chloride ions. Calcium chloride shall not be used. Super plasticizer shall be Daracem 19 by W. R. Grace Co. or prior approved equal-subject to approval at mix review.

2.1.5 Air-Entraining Agent: ASTM C 260, subject to approval.

2.1.6 Water Used in Mixing Concrete: Potable, clean and free from deleterious amounts of acid, alkalis, organic or other materials. No water is to be added at job site.

2.1.7 Curing Membrane: Non-staining paper conforming to ASTM C 171 , or 6 mil thick polyethylene film or burlene.

2.1.8 Curing Compound: Permitted at mat foundation only - Not permitted at 6" slab - see Section 3.5. Shall comply with ASTM C309, Type 1, Class B, liquid membrane – forming with fugitive dye for identification.

2.1.9 Expansion Joint Filler: Premolded, non-extruded, resilient type, non-bitumous, 1/4" to 1/2" thick unless otherwise noted on drawings, conforming to ASTM D1751.

2.1.10 Expansion Joint Sealing Compound: Expansion joint sealant and backer rod shall be in accordance with Section 07 92 00.

2.1.11 Vapor Retarder/Below Grade Waterproofing: Vapor retarder/Below Grade Waterproofing under interior concrete mat foundation per Section 07 26 23.

2.1.12 Sand for use between concrete mat foundation and concrete slab-on-grade shall be washed fine aggregate conforming to ASTM Test Standard D2419 “Sand Equivalency”, with a Sand Equivalency (SE) value of greater than 30.

2.1.13 Sealer: Sealer for floors shall be the following acrylic resin compound, or approved equal, designed to seal and dust-proof concrete floors. (Do not use sealer on floors or walls receiving waterproofing membrane.)

Hydrozo 100, contact BASF Building Systems, Southern California Territory. 10710 Rustic Creek Drive, Bakersfield, Ca 93312 (Cell 661-717-4303).
Note: provide a pre installation conference on site.

2.1.14 Chemical Hardener: Chemical hardener for floors shall be one of the following colorless aqueous solution containing a blend of magnesium flousilicate and zinc flousilicate combined with a wetting agent, containing not less than 2 lbs. of flousilicates per gallon:

"Surfhard"; Euclid Chemical Company
"Lapidolith"; Sonneborne-Contech
"Saniseal"; Master Builders
"Burk-O-Lith"; The Burke Company

2.1.15 Control Joints: Shall be manufactured by "Straightline" used with special installation tool. Control joint depth shall be 25% thickness of slab minimum

2.1.16 White Polyethylene Sheeting: (do not use clear) The sheeting shall be a minimum of 3 mil (.004) in thickness per ASTM C171. Units shall be lapped at least 18 inches.

2.1.17 Cold Joint Waterstop: Cold joint waterstop shall be 1" x ¾-inch continuous self-adhesive flexible strip of butyl rubber (24.9%), bentonite (75%) and volatiles (less than 1%) as manufactured by ACC - "Waterstop RX," or "MiraStop" by Mirafi, or equal.

PART 3 - EXECUTION

3.1 MIXING:

3.1.1 Ready mixed concrete shall be used and shall be mixed and transported in accordance with ASTM C 94. The dosage rate and all mix designs for Integral Colored Concrete must be approved in writing with manufacturers representative prior to ordering.

3.1.2 Re-tempering: Concrete shall be mixed only in quantities for immediate use. Concrete which has not been placed 1 1/2 hours after the water has been added at the batch plant shall be rejected. The concrete shall be discarded off the site and disposed of by the Contractor.

3.1.3 Indiscriminate addition of water to increase slump shall be prohibited. Water is not permitted to be added at the jobsite unless clearly noted on the approved mix design. The water must be incorporated by additional mixing equal to at least half of the total mixing required.

3.2 CONVEYING AND PLACING CONCRETE:

3.2.1 Notification: Notify the Resident Engineer and the Architect at least two working days in advance of placing concrete.

3.2.2 Preparation Before Placing:

3.2.2.1 Hardened concrete and foreign materials shall be removed from the inner surfaces of the conveying equipment.

3.2.2.2 Formwork shall have been completed; excess water shall have been removed; reinforcement and anchor bolts shall have been secured in place; expansion joint material, anchors, and other embedded items shall have been positioned; and the entire preparation shall have been approved on the day prior to the placing of concrete.

3.2.2.3 Semi-porous subgrades shall be sprinkled sufficiently to eliminate suction and extremely porous subgrades shall be sealed in an approved manner.

3.2.2.4 Before placing of any concrete, all forms shall be thoroughly cleaned, washed out with water, and made tight. Before reinforcing steel is placed on top of and/or adjacent to forms which have been sealed, the surface sealer shall be wiped off so that none may be tracked over, or in any other way come in contact with the reinforcing steel.

3.2.2.5 All incrustation shall be removed from forms and reinforcing steel at construction joints.

3.2.2.6 Depositing against other concrete. Before depositing new concrete on or against hardened concrete, re-tighten forms and roughen surface of hardened concrete as follows. Concrete which has been placed longer than 3-1/2 hours, but less than 6-1/2 hours, prepare by removing all laitance from concrete by wire brushing. Concrete which has been placed longer than 6-1/2 hours, prepare by sand blasting to roughen surfaces to 1/4" min. Thoroughly clean of foreign matter and laitance, and moisten with water.

3.2.3 Placement:

3.2.3.1 Place all concrete in accordance with ACI 318, Chapter 5.

3.2.3.2 Concrete shall be handled from the mixer to the place of final deposit as rapidly as practicable by methods which will prevent separation or loss of ingredients.

3.2.3.3 Conveying equipment shall be of size and design to ensure a continuous flow of concrete at the delivery end.

3.2.3.4 Concrete shall be deposited continuously, or in layers of such thickness that no concrete will be deposited on concrete which has hardened sufficiently to cause the formation of seams, planes, or weakness within the section, or visible pour lines in the finish surface.

3.2.3.5 All concrete shall be consolidated by vibration, so that the concrete is thoroughly worked around the reinforcement, around the embedded items, and into corners of forms, eliminating all air or stone pockets which may cause honeycombing, pitting, or planes of weakness. All mechanical vibrators shall have a minimum frequency of 7,000 rpm and shall be operated

by competent workmen. Over-vibration and use of vibrators to transport concrete within forms shall not be allowed. Vibrators shall be inserted and withdrawn at many points, from 18 to 30 inches apart, for 5 to 15 seconds duration. A spare vibrator shall be kept on the job site during all concrete placing operations. Particular care shall be given at exposed concrete surfaces.

3.2.3.6 Inspections: Continuous inspection required during placement of concrete with a strength over 2,500 psi and/or as required per the structural drawings.

3.2.3.7 Hot Weather Requirements:

3.2.3.7.1 All concrete placed shall be in compliance with ACI 305R.

3.2.3.7.2 The maximum placing temperature of the deposited concrete shall be 90 degrees F.

3.2.3.7.3 If weather conditions would cause the concrete temperature, when deposited, to exceed 90 degrees F, the mix shall be cooled by wetting the aggregate or by other appropriate methods. Revise mix design as necessary.

3.2.3.8 Contractor shall have the superplastisizer's manufacturer's representative on site supervising the dispersing procedures when utilizing superplatisizer in all integral colored concrete.

3.2.3.9 REMOVING AND REUSING FORMS

A. Formwork for sides of beams, walls, columns, and similar parts of the Work that does not support weight of concrete may be removed after cumulatively curing at not less than 50 deg F (10 deg C) for 24 hours after placing concrete if concrete is hard enough to not be damaged by form-removal operations and curing and protection operations are maintained.

B. Cut off and grind glass-fiber-reinforced plastic form ties flush with surface of concrete.

C. Leave formwork for beam soffits, joists, slabs, and other structural elements that support weight of concrete in place until concrete has achieved **at least 70 percent of 28-day design compressive strength**. Remove forms only if shores have been arranged to permit removal of forms without loosening or disturbing shores.

D. When forms are reused, clean surfaces, remove fins and laitance, and tighten to close joints. Align and secure joints to avoid offsets. Do not use patched forms for cast-in-place architectural concrete surfaces.

3.2.3.10 JOINTS

A. Construction Joints: Install construction joints true to line with faces perpendicular to surface plane of cast-in-place architectural concrete so strength and appearance of concrete are not impaired, at locations indicated.

1. Place joints perpendicular to main reinforcement. Continue reinforcement across construction joints unless otherwise indicated.

B. Contraction Joints: Form weakened-plane contraction joints true to line with faces perpendicular to surface plane of cast-in-place architectural concrete so strength and appearance of concrete are not impaired, at locations indicated or as approved by Architect.

3.2.4 Flatwork:

3.2.4.1 Edge forms and intermediate screed strips shall be set accurately to produce the designed elevations and contours in the finished surface, and shall be sufficiently strong to support vibrating bridge screeds or roller pipe screeds if the nature of the finish specified requires the use of such equipment. The concrete surface shall be aligned to the contours of screed strips by the use of strike-off templates or approved compacting type screeds.

3.2.4.2 When the formwork is cambered, contractor shall take appropriate measures to maintain the proper concrete thickness.

3.2.4.3 Joints in slabs on grade shall be located and detailed as indicated in the project drawings. Contractor shall notify the Resident Engineer and the Architect on location of all other required joints not shown on drawings before reinforcing is placed. Contractor shall install sealant as referenced in Division 7 in all joints.

3.2.4.4 Concrete slabs shall be thoroughly consolidated. Internal vibration shall be used along the bulkheads of slabs on grade. Consolidation of slabs and floors shall be obtained with vibrating bridge screeds, roller pipe screeds, or other approved means. Concrete to be consolidated shall be as dry as practicable and the surfaces thereof shall not be manipulated prior to the finishing operations.

3.2.4.5 Slabs on grade and topping slabs shall slope uniform to grades and elevation where shown on the drawings, locally slope to drains. Concrete shall slope a minimum 1% away from building.

3.3 REPAIR OF SURFACE DEFECTS:

3.3.1 Repair of Surface Defects: All form tie holes shall be filled and repairable defective areas patched immediately after the forms have been removed. Remove fins and burrs.

3.3.2 Removal: After forms have been removed, any concrete which is not formed as shown on the plans, or which is out of alignment or level beyond required tolerances shall be removed and replaced at no additional cost to the Owner. Defective surfaces may be repaired and patched in accordance with the following procedure. All conditions requiring patches and completed patches will be inspected. Patches disapproved as not restoring the quality and appearance of the surrounding work shall be removed and replaced so as to match the surrounding work.

3.3.3 Repair Procedure:

3.3.3.1 All honeycombed and other defective concrete shall be removed to sound concrete, but in no case to a depth of less than 1 inch. The area to be patched and an area of at least 6 inches wide surrounding it shall be dampened to prevent absorption of water from the patching mortar. A bond of neat Portland cement and water, and, if permitted, some fine sand passing a No. 30 sieve, shall be mixed to the consistency of thick cream and shall then be well brushed into the surface. Other concrete bonding agents may be used when approved.

3.3.3.2 The patching mixture shall be made of the same material and of approximately the same proportions as used for the concrete, except that the course aggregate shall be omitted and the mortar shall consist of not more than 1 part cement to 2-1/2 parts sand by damp loose volume. White Portland cement shall be substituted for a part of the gray Portland cement on exposed concrete in order to produce a color matching the color of the surrounding concrete, as determined by a trial patch.

3.3.3.3 The quantity of mixing water shall be no more than necessary for handling and placing. The patching mortar shall be mixed in advance and allowed to stand with frequent manipulation with a trowel, without addition of water, until it has reached the stiffest consistency that will permit placing.

3.3.3.4 After surface water has evaporated from the areas to be patched, the bond coat shall be well brushed into the surface. When the bond coat begins to lose the water sheen, the pre-mixed patching mortar shall be applied. The mortar shall be thoroughly consolidated into place and struck off so as to leave the patch slightly higher than the surrounding surface. To permit initial shrinkage, it shall be left undisturbed for at least one hour before being finally finished. The patched area shall be kept damp for seven days.

3.3.4 Prior to proceeding with any patch work, the Contractor is responsible for establishing trial patch areas to develop the approved patching color and the method of applying and surface-texturing the patching material.

3.4 CONCRETE FINISHES:

3.4.1 Finishes for Formed Surfaces:

3.4.1.1 As-cast Surfaces: After surface defects have been repaired, as specified,

concrete shall be left with finish imparted by forms

A. Architectural Concrete Finish: Match Architect's design reference sample, identified and described as indicated, to satisfaction of Resident Engineer and Architect.

B. Related Unformed Surfaces: At tops of walls, horizontal offsets, and similar unformed surfaces adjacent to formed surfaces, strike off smooth and finish with a texture matching adjacent formed surfaces.

1. Continue final surface treatment of formed surfaces uniformly across adjacent unformed surfaces unless otherwise indicated.

3.4.2 Finishes for Flatwork:

3.4.2.1 Provide Floated Finish for Subfloors for Ceramic Tile: After concrete has been placed, struck off, consolidated and leveled, concrete shall not be worked further until ready for floating. Floating shall begin when water sheen has disappeared, and/or when mix has stiffened sufficiently to permit proper operation of a power-driven float. Surface shall then be consolidated with power-driven floats of impact type. Hand floating with wood or cork-faced floats shall be used in locations inaccessible to power-driven machine. Trueness of surface shall be re-checked at this stage with a 10 ft. straight-edge applied at not less than two different angles. All high spots shall be cut down and all low spots filled during this procedure to produce planes checking true under the straight-edge in any direction, with tolerances not exceeding 1/8 inch in 10 ft. Slab shall then be refloated immediately to a uniform, smooth, granular texture.

3.4.2.2 Provide Troweled Finish for Interior Concrete Finish Floors and Subfloors for Resilient or Vinyl Flooring and Carpet: Surface shall be finished first with impact power floats, as specified above where applicable, then with power trowels, and finally with hand trowels. First troweling after power floating shall be done by a power trowel and shall produce a smooth surface which is relatively free of defects but which may still contain some trowel marks. Additional trowelings shall be done by hand after surface has hardened sufficiently. Final troweling shall be done when a ringing sound is produced as trowel is moved over surface. Surface shall be thoroughly consolidated by the hand troweling operations. Finished surface shall be free of any trowel marks and shall be uniform in texture and appearance. On surfaces intended to support floor covering, any defects of sufficient magnitude to show through floor covering shall be removed by grinding.

3.4.2.3 Provide the same finish on the new concrete slab as the existing slab when the two join.

3.4.2.4 Edge and Joint Finish: Use standard tools to produce rounded edge corners and intermediate line scoring.

3.4.2.5 Mark-Off Lines: Mark-off lines shall be formed with curved edging tool, neat and true to line, uniform throughout. Conform to markings shown on drawings.

3.4.2.6 Sealer: Remove all dirt, dust, oil, grease, asphalt and other foreign matter. Cleanse with caustics and detergents as necessary. Apply sealer in two coats using an ordinary garden sprayer. Apply first coat evenly and uniformly as soon as possible after final finishing. Apply second coat when all trades have completed work and structure is ready for occupancy.

3.4.2.7 Broomed Finish: Provide a non-slip broomed finish for walks and exterior slabs unless otherwise indicated. Accomplish the broom finishing in accordance with ACI 301, except as modified hereinafter. Use a flexible bristle brush. The brooming or brushing shall be in a direction transverse to that of traffic or at right angles to the slope of the floor.

3.4.3 Chemical Hardener: Apply chemical hardeners in accordance with manufacturer's printed instruction. After final coat of chemical hardener solution is applied and dried, remove surplus hardener by scrubbing and mopping with water.

3.5 PROTECTION AND CURING:

3.5.1 General: Freshly deposited concrete shall be protected from premature drying and excessively hot or cold temperatures, and shall be maintained without drying at a relatively constant temperature for the period of time necessary for the hydration of the cement and proper hardening of the concrete.

3.5.2 Curing: Curing shall immediately follow the finishing operation.

3.5.2.1 Curing at all concrete elements including architectural concrete except mat foundation - Fog Spray: Immediately after the finishing operations have been completed and marring of the concrete will not occur, the entire surface of the newly placed concrete shall be fog sprayed with water and then covered with white polyethylene or burlene while still moist. The covering material shall be securely weighted and remain in place for a minimum of seven (7) days. **CONTRACTOR TO PROVIDE TIME IN PROJECT SCHEDULE FOR PROPER CURING PER THIS SPECIFICATION.** The concrete shall not be left exposed for more than 1/2 hour between stages of curing or during the curing period. Failure to provide sufficient cover material to adequately take care of both curing and other requirements shall be cause for immediate suspension of concrete operations.

3.5.2.2 Curing at mat foundation – Curing may be by procedure outlined in Section 3.5.2.1 or by use of a curing compound as noted in Section 2.1.8.

3.5.3 Formed Surfaces: Steel forms heated by the sun and all wood forms in contact with the concrete during the final curing period shall be kept wet. If forms are to be removed during the curing period, one of the above curing materials or methods shall be employed immediately. Such curing shall be continued for the remainder of the curing period.

3.5.4 Protection from Mechanical Injury: During the curing period, the concrete shall be protected from damaging mechanical disturbances, particularly load stresses, heavy shock, and excessive vibration. All finished concrete surfaces shall be protected from damage caused by construction equipment, materials, or methods, and by rain or running water. Self-supporting structures shall not be loaded in such a way as to over stress the concrete. The slab is to be kept undisturbed with no material or equipment on the slab for 12 consecutive days after placement.

3.5.5 Surfaces to receive resilient flooring, waterproofing or dampproofing member, pavers and ceramic tile shall be cured by covering with waterproof paper coverings.

3.6 CONSTRUCTION SLAB JOINTS:

3.6.1 Construction Joints: Joints in concrete slabs shall be located only as shown on documents.

3.6.2 Control Joints: (Weakened Plane Joints): Form in nonstructural slabs and walks 12-feet o.c. maximum or where shown. After initial set occurs, round top edges of joint slightly with joinery tool to create “tooled joint”. A continuous sawcut to a minimum depth of 1 to 1-1/2 inch depth made while slab is green (within 4 hours of pour) will be acceptable in lieu of above. Provide cold joint waterstops in all joints formed in slabs on ground and in all joints between slab on ground and walls or foundations. Sawcut joints to a depth of ¼ of the thickness of the slab may be allowed subject to approval of the Resident Engineer and the Architect in writing. Location, pattern, and spacing shall be as above or as indicated.

3.6.3 Expansion Joints with Sealant: Expansion joint filler shall be full depth of concrete. Provide expansion joints with sealant typically between exterior concrete slabs on ground and building structure walls and columns, and where shown. Note: Bondbreaker tape will not be required if specific expansion joint filler with peel-off edge is used throughout. Provide 3/8-inch diameter x 24-inch round dowels at 24 inches on center, sleeved one side, between slab pours when and where noted on drawings. For joint sealant refer to Division 7, SEALANTS.

3.7 DEFECTIVE WORK:

Defective concrete work shall be removed and replaced at Contractor's expense.

END OF SECTION 03 30 00

SECTION 03 30 53 - SITE CONCRETE

PART 1 - GENERAL

1.1 RELATED DOCUMENTS AND DESCRIPTION OF WORK:

The work includes Portland cement concrete paving as shown on drawings, including curbs, gutters, ramps, walkways and pavement. General provisions of Contract, including General and Supplementary Conditions and Division 1 specification sections apply to work specified in this section.

1.2 RELATED WORK:

1.2.1 Prepared sub-base as specified in Soils Report.

1.2.2 Concrete and related materials are specified in Division 3.

1.2.3 Joint fillers and sealers are specified in Division 7.

1.2.4 Landscaping is specified in Division 32.

1.3 QUALITY ASSURANCE:

1.3.1 Codes and Standards: Comply with local governing regulations if more stringent than herein specified.

1.3.2 Pre-Conference: Contractor shall be required to schedule and have a pre-conference with Resident Engineer and Architect on site prior to ordering colored concrete.

1.4 SUBMITTALS:

1.4.1 Furnish samples, mix designs, manufacturer's product data, test reports and material certifications as required in referenced sections for concrete and joint fillers and sealers.

1.5 JOB CONDITIONS:

1.5.1 Traffic Control: Maintain access for vehicular and pedestrian traffic as required for other construction activities, and to existing buildings.

1.5.2 Utilize flagmen, barricades, warning signs and warning lights as required.

PART 2 - PRODUCTS

2.1 MATERIALS:

2.1.1 Sub-base: See Soils Report.

2.1.2 Forms: See Section 03 11 00 - Concrete Formwork.

2.1.3 Welded Wire Mesh: Welded plain cold-drawn steel wire fabric, ASTM A 185. Furnish in flat sheets, not rolls, unless otherwise acceptable to Architect.

2.1.4 Reinforcing Bars: Deformed steel bars, ASTM A 615, Grade 40.

2.1.5 Concrete Materials: Comply with requirements of applicable Division 3 sections for concrete materials, admixtures, curing materials and others as required unless otherwise noted. Comply with specific finishes and admixtures for decorative paving as specified in landscape documents.

2.1.6 Expansion Joint Materials: Comply with requirements of applicable Division 7 sections for preformed expansion joint fillers and sealers. Expansion joint material to be recessed with tear-off plastic cover to allow for sealant application.

2.1.7 Anti-Spalling Compound: 50% (by volume) boiled linseed oil and 50% (by volume) mineral spirits, complying with AASHTO M-233.

2.1.8 Concrete Mix, Design and Testing:

2.1.8.1 Comply with requirements of applicable Division 3 sections for concrete mix design, sampling and testing, and quality control, and as herein specified.

2.1.8.2 Design mix to produce standard-weight concrete consisting of Portland cement, aggregate, air-entraining admixture and water to produce the following properties:

2.1.8.2.1 Compressive Strength: **2500 psi** minimum at non-vehicular areas and 3250 psi at vehicular areas, unless otherwise indicated.

2.1.8.2.2 Slump Range: **3"** unless otherwise indicated.

2.1.8.3 Colored Concrete: Not Used

PART 3 - EXECUTION

3.1 SURFACE PREPARATION: Remove loose material from compacted subbase surface immediately before placing concrete.

3.2 FORM CONSTRUCTION: See Section 03 11 00 - Concrete Form Work

3.2.1 Set forms to required grades and lines, rigidly braced and secured. Install sufficient quantity of forms to allow continuous progress of work and so that forms can remain in place at least 24 hours after concrete placement.

3.2.2 Check completed formwork for grade and alignment to following tolerances:

Top of forms not more than 1/8" in 10'.

Vertical face on longitudinal axis, not more than 1/8" in 10'.

3.2.3 Clean forms after each use, and coat with form release agent as often as required to ensure separation from concrete without damage. Form coating for integral color

concrete shall be of type recommended by color manufacturer.

3.3 REINFORCEMENT: Locate, place and support reinforcement as specified in Division 3 sections, unless otherwise indicated.

3.4 CONCRETE PLACEMENT:

3.4.1 General: Comply with requirements of Division 3 sections for mixing and placing concrete, and as herein specified.

3.4.2 Do not place concrete around manholes or other structures until they are at required finish elevation and alignment.

3.4.3 Deposit and spread concrete in a continuous operation between transverse joints, as far as possible. If interrupted for more than 1/2 hour, place a construction joint.

3.4.4 Curbs and Gutters: Automatic machine may be used for curb and gutter placement at Contractor's option. If machine placement is to be used, submit revised mix design and laboratory test results which meet or exceed minimums specified. Machine placement must produce curbs and gutters to required cross-section, lines, grades, finish, and jointing as specified for formed concrete. If results are not acceptable, remove and replace with formed concrete as specified.

3.5 JOINTS:

3.5.1 General Control Joints: Construct expansion, weakened-plane (contraction) and construction joints true-to-line with face perpendicular to surface of concrete. Construct transverse joints at right angles to the centerline, unless otherwise indicated. Type and method of joints shall be determined by Contractor unless otherwise noted in Soils Report and/or drawings.

3.5.2 When joining existing structures, place transverse joints to align with previously placed joints, unless otherwise indicated.

3.5.3 Weakened-Plane (Contraction) Joints: Provide weakened-plane (contraction) joints, sectioning concrete into areas as shown on drawings. Construct weakened-plane joints for a depth equal to at least 1/4 concrete thickness, as follows:

3.5.3.1 Tooled Joints: Form weakened-plane joints in fresh concrete by grooving top portion with a recommended cutting tool and finishing edges with a jointer.

3.5.3.2 Sawed Joints: Form weakened-plane joints using powered saws equipped with shatterproof abrasive or diamond-rimmed blades. Cut joints into hardened concrete as soon as surface will not be torn, abraded, or otherwise damaged by cutting action.

3.5.4 Construction Joints: Place construction joints at end of placements and at locations where placement operations are stopped for a period of more than 1/2 hour, except

where such pours terminate at expansion joints. Construct joints as shown or, if not shown, use standard metal keyway-section forms.

3.5.5 Expansion Joints: Provide premolded joint filler for expansion joints abutting concrete curbs, catch basins, manholes, inlets, structures, walks and other fixed objects, unless otherwise indicated.

3.5.6 Extend joint fillers full width and depth of joint, and not less than 1/2" or more than 1" below finished surface where joint sealer is indicated. If not joint sealer, place top of joint filler flush with finished concrete surface.

3.5.7 Furnish joint fillers in one-piece lengths for full width being placed, wherever possible. Where more than one length is required, lace or clip joint filler sections together.

3.5.8 Protect top edge of joint filler during concrete placement with a metal cap or other temporary material. Remove protection after concrete has been placed on both sides of joint.

3.5.9 Fillers and Sealants: Comply with the requirements of applicable Division 7 sections for preparation of joints, materials, installation and performance.

3.6 CONCRETE FINISHING: See Section 03 30 00 and as specified herein.

3.6.1 Work edges of slabs, gutters, back top of edge of curb and formed joints with an edging tool, and round to 1/2" radius, unless otherwise indicated. Eliminate tool marks on concrete surface.

3.6.2 Do not remove forms for 24 hours after concrete has been placed. After form removal, clean ends of joints and point-up any minor honeycombed areas. Remove and replace areas or sections with major defects, as directed by Architect.

3.6.3 Unless otherwise noted all site concrete shall have **medium non-slip broom** finish.

3.6.4 Contractor shall provide a separate 4'-0" x 4'-0" x 4" thick mock up quality control field sample on site for Architect's review prior to performing work for special finishes and/or patterns other than broom finish.

3.7 CURING:

3.7.1 Protect and cure finished concrete paving, complying with applicable requirements of Division 3 sections. Use membrane-forming curing and sealing compound Sealtight 1100-clear by W. R. Meadows.

3.7.2 Anti-Spalling Treatment: A second coat of curing and sealing compound may be used or an anti-spalling compound applied over concrete cured by continuous moist curing methods. Apply compounds to concrete surfaces no sooner than 28 days after placement, to clean, dry concrete free of oil, dirt, and other foreign material. Apply curing and sealing compound at a maximum coverage rate of 300 Sq.Ft./gallon. Apply anti-spalling compound in two sprayed applications. First application at rate

of 40 sq.yds. per gallon; second application, 60 sq.yds. per gallon. Allow complete drying between applications.

3.7.3 Contractor shall follow manufacturer's written instruction for colored concrete.

3.8 REPAIRS AND PROTECTIONS:

3.8.1 Repair or replace broken or defective concrete, as directed by Architect.

3.8.2 Drill test cores where directed by Architect, when necessary to determine magnitude of cracks or defective areas. Fill drilled core holes in satisfactory pavement areas with Portland cement concrete bonded to pavement with epoxy adhesive.

3.8.3 Protect concrete from damage until acceptance of work. Exclude traffic from pavement for at least 14 days after placement. When construction traffic is permitted, maintain pavement as clean as possible by removing surface stains and spillage of materials as they occur.

3.8.4 Sweep concrete pavement and wash free of stains, discolorations, dirt and other foreign material just prior to final inspection.

END OF SECTION 03 30 53

SECTION 04 22 00 - CONCRETE UNIT MASONRY

PART 1 - GENERAL

1.1 RELATED DOCUMENTS AND DESCRIPTION OF WORK

This section covers the furnishing and installing of concrete unit masonry work as shown and noted on the drawings and specified herein. The Conditions of the Contract and Division 1 apply to this section as fully as if repeated herein.

1.2 QUALITY ASSURANCE:

1.2.1 Codes: Except as modified by the requirements specified herein and/or the details on the drawings, all concrete unit masonry work shall conform to the "California Building Code", CURRENT Edition (CBC), Chapter 21, "Masonry".

1.3 REFERENCES:

The editions of the specifications and standards referenced herein, published by the following organizations, apply to the work only to the extent specified by the reference.

1.3.1 American Concrete Institute (ACI).

1.3.2 American Society for Testing and Materials (ASTM).

1.4 SUBMITTALS:

1.4.1 Submittal procedures and quantities are specified in Section 01 33 00.

1.4.2 Samples: Submit representative samples of masonry units to be used on the job for approval. Contractor shall construct in place a 4'x 8' mock up quality control field sample of masonry units for approval by the Resident Engineer and the Architect where exposed masonry wall finish is required by contract documents.

1.4.3 Product Data: Furnish a notarized certificate of compliance identifying the cement used and stating that the cement complies with ASTM C150.

1.5 HANDLING AND STORAGE:

Immediately upon delivery to the site, masonry units shall be stacked undercover or otherwise protected from exposure to the weather and from contact with soil. Care shall be exercised in handling these items to avoid chipping and breakage and to protect them from damage. Use of damaged blocks will not be permitted. Units shall be stored on pallets or temporary wood floors off the ground and out of the way of other trades.

1.6 PROJECT CONDITIONS:

Do not lay masonry when the ambient temperature is below 40 degrees F or when it is likely that the ambient temperature will fall below 40 degrees F during, or within 24 hours after, masonry laying operations.

1.7 COORDINATION:

1.7.1 Locate dowel positions before concrete is placed so dowels match reinforcing steel in masonry. Furnish a dowel placing plan in addition to bar lists. Locate elevations for joint between concrete footing and masonry.

1.7.2 Place bolts, anchors, drilled-in wedge anchors, metal attachments, nailing blocks and inserts required by other trades for attaching their work to masonry.

PART 2 - PRODUCTS

2.1 MATERIALS:

2.1.1 Concrete Masonry Units: Hollow load-bearing units, conforming to ASTM C90, Type 1 medium weight units, except that units shall have a maximum linear shrinkage of 0.06%. Block shall be:

A. Standard precision units 8" x 16" nominal face size, thickness as indicated. Strength shall be as indicated on structural drawings. Units shall be standard block texture of color: Castle Gray as manufactured by RCP Block or equal. Texture - heavy sandblast in the field all exposed surfaces (provide sample for by the Resident Engineer and the Architects approval prior to commencing work). For lintel units see 3.3.1.7.

B CMU Admixture: Provide Rheopel admixtures which are specially formulated for use in the manufacture of concrete masonry units (CMUs) as well as other "dry cast" concrete products. Rheopel water-repellent and efflorescence-controlling admixtures are integrally mixed into CMUs during manufacturing at the block plant. Provide admixtures per manufacturer's recommendations.

2.1.2 Cement: Standard Type II Portland cement, conforming to ASTM C 150 Type II, low alkali.

2.1.3 Lime: Hydrated, conforming to ASTM C 207, Type S or quicklime conforming to ASTM C 5.

2.1.4 Mortar Design: Mortar used in unit masonry construction shall be Type S, composed of one part Portland cement and 3-1/2 max. parts of sand based on dry loose volumes and 1/4 part lime putty or dry hydrated lime. Mortar shall have a compressive strength of 1800 psi at 28 days unless otherwise indicated on drawings. **Mortar shall be custom colored as selected by the Resident Engineer and the Architect to match block finish color.**

2.1.4.1 Mortar Sand: Natural sand, clean and graded, conforming to ASTM C 144, except not less than 3% shall pass No. 100 sieve.

2.1.4.2. Ready Mix Mortar: Allowed as approved substitution conforming to ASTM C-1142 Standard Specification for Ready Mix Mortar for Unit

Masonry. Color to be approved by the Resident Engineer and the Architect.

2.1.4.3 Mortar Admixture: Provide Rheopel Mortar Admixture which is a water-repellent admixture that is integrally mixed into masonry mortar at the job site prior to concrete masonry wall construction. Provide admixtures per manufacturer's recommendations.

2.1.5 Aggregate for Masonry Grout: Pea gravel conforming to ASTM C 404 except graded with not more than 5% passing a No. 8 sieve and 100% passing 3/8" sieve size.

2.1.6 Sand for Grout: Washed, natural sand conforming to ASTM C33 and having hard, strong and durable particles evenly graded with 5% minimum passing #100 screen and which does not contain more than 2% by weight of such deleterious substances as clay lumps, shale, schist, alkali, mica, coated grains or soft flaky particles.

2.1.7 Water: Clean and free of deleterious amounts of acids, alkalis, or organic materials.

2.1.8 Grout: Coarse grout shall have a minimum of 2 parts pea gravel and shall be used in grout spaces 2" wide or more and in all filled cells. (See Section 03 20 00 for strength requirements.)

2.1.9 Lime Putty: Make from quicklime or hydrated lime. If from quicklime, other than pulverized (processed), quicklime, slake properly and screen through sieve of 16 meshes per linear inch. Before using, properly store and protect for not less than 10 days. If pulverized (processed quicklime) slake for at least 48-hours or until putty has cooled entirely. Putty must weigh at least 83 lbs. per cubic foot.

2.1.10 Anchors, Ties and Centering Devices: Factory fabricated from steel wire conforming to ASTM A82. Wire devices in all walls shall be formed from wire that has been zinc coated in accordance with ASTM A116, Class 1.

2.1.10.1 Centering clips shall be formed from not lighter than 9 gauge wire. Clips shall be of a design that will prevent displacement of the reinforcing bars during the course of construction.

2.1.10.2 Wire anchors for use with embedded slots or wire inserts shall be formed from not lighter than 9 gauge wire looped and closed.

2.1.11 Water: Fresh, clean and potable, and free from such amounts of mineral and organic substances as would adversely affect the hardening of cement mortar.

2.1.12 Reinforcing Steel: Furnish and install reinforcing steel for grouted concrete unit masonry in accordance with the requirements of Section 03 20 00.

2.1.12.1 Horizontal reinforcing at mortar joints shall be per structural drawings.

2.1.13 Control Joint: Premolded control joint filler for masonry walls shall be Dur-o-Wall No. 6 wide flange with neoprene compound edge or prior approved equal.

2.1.14 Waterproofing: See Division 7 for clear waterproofing on exposed masonry above grade.

PART 3 - EXECUTION

3.1 WORKMANSHIP:

3.1.1 All masonry shall be reinforced and shall be fully grouted unless otherwise noted in Structural Drawings.

3.1.2 Neatly remove damaged masonry and replace with new work to match adjoining masonry.

3.1.3 Walls: Lay plumb, level and to plane surface. Mortar joints straight, clean and uniform in thickness. Fully butter all end joints where masonry units are below grade. Butter and tool in weathered joints each side of masonry.

3.2 MIXING MORTAR AND GROUT:

3.2.1 Mixing of Mortar: Place 1/2 required water and 1/2 required sand into rotating mixer then all cement and remaining water, sand and lime. Admixtures shall be added in proportion and sequence as recommended by manufacturer.

3.2.1.1. Lime shall be the last material added to the mix. Mix at least 3-minutes after all materials are in mixer. Equipment for mixing and handling mortar shall be of an approved type. Use mixer of at least one sack capacity. Hand mixing not allowed. Materials for mortar and grout shall be measured in suitable calibrated devices.

3.2.1.2 Maintain mortar on boards to slump of 2-3/4" plus or minus 1/4" using truncated cone 4" to 2" diameter, 6" high. Retemper mortar only on boards by adding water within basin formed with mortar and carefully work mortar and water together. Dashing or pouring water over mortar, not permitted. Discard mortar that has become harsh and non-plastic. When mortar has been maintained plastic, it may be used up to but not more than 60-minutes after original mixing.

3.2.2 Mixing Grout: Use transit mixed grout with sufficient water added so slump is near maximum (approximately 11") without separation of aggregate and cement paste. Discard grout if not in final position by 2-1/2 hours after water is first added providing it is constantly rotated and grout remains in fluid condition. Move from mixer to place of final deposit as rapidly as practical by methods which prevent separation or loss of ingredients.

3.2.2.1 Measure materials with accurately calibrated devices. Shovel measurements not allowed. Percentages are by volume and one 94 lb. sack of cement equals 1 cu.ft.

3.2.2.2 Grout: Grout strength and slump shall be as indicated on project drawings: l

part cement, 3 parts maximum of sand, 2 parts pea gravel.

3.2.2.4 Pointing Mortar: 1 part white cement, 1/8 part lime putty, 1 part sand.

3.3 INSTALLATION:

3.3.1 Laying Masonry Units: Where continuous inspection is indicated, do not install block or grout unless masonry inspector is present.

3.3.1.1 Do not use oily, greased, chipped, cracked or otherwise defective marked units.

3.3.1.2 Remove dust or dirt from block surfaces before laying. Sandblast top of foundation to remove laitance from pores and expose the aggregate. Clean surface of all dust, dirt, organic matter, or debris before laying first course.

3.3.1.3 Prior to receiving grout, cells shall be clean of all deleterious materials and obstructions. Remove overhanging mortar from inside cells.

3.3.1.4 Lay block in running bond unless otherwise indicated on drawings.

3.3.1.5 Minimum dimension of the grout spaces containing reinforcing steel shall be not less than 3-1/2".

3.3.1.6 All head joints shall be full shoved.

3.3.1.7 All bond beam units shall be deep cut units. All bond beam units shall be of the same size, color, and layout pattern as the adjacent field units, but of a precision texture.

3.3.1.8 Exposed joints to be tooled concave. Joints below grade and at walls to receive plaster shall be finished flush.

3.3.1.9 Bolts: All bolts which are embedded in masonry shall be grouted in place with not less than 1" of grout or drypack between the bolt and the masonry. Vertical bolts shall be placed inside horizontal ties located within 2" of the top at ends of walls. All bolt ties shall be hairpins, hooks or stirrups. Ties shall be not less than #3 bars. All bolts shall be accurately set with templates.

3.3.1.10 Make block cuts with carborundum wheel or masonry saw.

3.3.1.11 Piping not allowed in block work unless shown on drawings.

3.3.1.12 Install necessary bracing and shoring true, rigid and strong enough to carry all dead and live loads without deflection. Do not backfill behind retaining wall unless wall is shored or has attained full strength. All reinforcing shall be fully embedded in grout. The thickness of the grout between masonry units and reinforcing shall be a minimum of 3/4".

3.3.1.13 Install reinforcement as indicated on the drawings. Provide 3/4" clearance between bar and masonry. Furnish and install all required metal accessories to insure accurate alignment of reinforcement during grout placement. Horizontal reinforcement shall be placed only in bond beam units.

3.3.1.14 Control Joints: Provide control joints as shown on the drawings or as directed by the Resident Engineer and the Architect. Control joints shall be continuous full height of walls. At bond beams control joints shall separate both block and grout, however, steel reinforcing shall be continuous. Hold control joint filler materials back from finished surface. Grout block cells solid each side of joint with No. 5 vertical reinforcing bar unless otherwise noted in drawings.

3.3.2 Low Lift Grout System:

3.3.2.1 This system includes placing reinforcing steel before or during construction of wall, pouring grout in lifts not to exceed 4'-0" tall as specified herein, unless cleanouts are provided as specified.

3.3.2.2 Place reinforcing steel accurately according to drawings and notes thereon. Hold vertical steel firmly in position. Use frames or other suitable devices to prevent movement or jarring while placing masonry. Place horizontal steel as work progresses. Lap steel at least 48 bar diameters. Extend steel through points of stoppage to provide required lap. Horizontal steel may be wired temporarily above required position and tagged to indicate its location and vertically marked indicators maintained showing required location of horizontal bars. If doubt exists whether or not steel has been properly placed, use drill to locate same, or open masonry as required by the Resident Engineer and the Architect. Make repairs as directed.

3.3.2.3 After the laying of masonry units is completed, the cells cleaned, the reinforcing positioned, and inspection completed, the cleanouts shall be closed by inserting face shells of masonry units or covering the opening with forms. Face shell plugs shall have a two day minimum curing time and shall be adequately braced to resist the pressure of the fluid grout.

3.3.2.4 All anchor bolts shall be installed with the tail of bolt hooked over a continuous horizontal bar or an added horizontal bar. Dry pack around void where anchor bolt penetrates masonry face shell.

3.3.2.5 Fill all masonry cores with grout and immediately consolidate with a mechanical vibrator having a 3/4" head and operating at 5000 RPM submerged.

3.3.2.6 Pour grout to 1-1/2" below top of masonry unit except at finish course. Immediately remove grout or mortar on exposed faces.

3.3.2.7 Form construction joints by stopping grout 1-1/2" below top of wall. If work is to be stopped for more than 1 hour, form construction joint with block top surface free of mortar or grout.

3.3.2.8 Cleanout openings shall be provided for all cells at the bottom of each pour. The openings shall be made prior to the start of laying and shall be of sufficient size and location to allow flushing away of mortar droppings and debris. Cleanout openings may be cut in the blocks.

3.4 CLEANING AND FINISHING:

3.4.1 Carefully clean exposed masonry of grout droppings or stains before mortar or grout sets up and leave perfectly clean. Do not use metal bristled brushes or acid washing. If mortar or grout droppings are allowed to set-up on exposed surfaces, remove discolored units and install new units.

3.4.2 Repair damaged masonry and fill interstices between masonry and other materials, and fill pin holes carefully with mortar to match adjoining work.

3.4.3 See Division 7 for clear waterproofing on all interior and exterior masonry.

3.5 PROTECTION:

Protect top of unfinished work where mortar or grout has not yet set, with water-repellent covering.

3.6 TESTS AND INSPECTION:

3.6.1 Tests shall be performed in accordance with Section 01 45 00 of these specifications.

END OF SECTION 04 22 00

SECTION 05 50 00 - METAL FABRICATION

PART 1 - GENERAL

1.1 RELATED DOCUMENTS:

Drawings and general provisions of Contract, including General and Supplementary Conditions and Division-1 Specification sections, apply to work of this section as fully as if repeated herein.

1.2 DESCRIPTION OF WORK:

1.2.1 Definition: Metal fabrications include items made from iron, steel, stainless steel, and aluminum shapes, plates, bars, strips, tubes, pipes, and castings which are not a part of structural steel or other metal systems specified elsewhere.

1.2.2 The work includes the furnishing and installing of all miscellaneous metal work and related connections complete as indicated on the drawings and as specified.

1.2.3 Structural steel is specified in another section within Division 5.

1.3 CODES AND STANDARDS:

The editions referenced herein of Federal Specifications (Fed. Spec.) and of the other standards and specifications published by the following organizations, apply to the work only to the extent specified by the reference.

1.3.1 American National Standards Institute (ANSI)

1.3.2 American Institute of Steel Construction (AISC)

1.3.3 American Society for Testing and Materials (ASTM)

1.3.4 American Welding Society (AWS)

1.3.5 National Association of Architectural Metal Manufacturers (NAAMM)

1.3.6 “California Building Code, CURRENT Edition, (CBC)”

1.4 QUALITY ASSURANCE:

1.4.1 Shop Assembly: Preassemble items in shop to greatest extent possible to minimize field splicing and assembly. Disassemble units only as necessary for shipping and handling limitations. Clearly mark units for reassembly and coordinated installation.

1.5 SUBMITTALS:

1.5.1 Submittal procedures and quantities are as specified in Section 01 33 00.

1.5.2 Product Data: Submit manufacturer's specifications, anchor details and installation instructions for products used in miscellaneous metal fabrications, including paint products and grout.

1.5.3 Shop Drawings:

1.5.3.1 Submit fully detailed shop drawings of all miscellaneous metal work giving sizes; details of fabrication and construction; methods of assembly and bracing; and locations of hardware, anchors, and all accessories.

1.5.3.2 Drawings shall include all shop and fabrication details, including cuts, copes, connections, holes, bolts and welds. All welds, both shop and field, shall be indicated by standard welding symbols in AWS D1.1. Drawings shall show the size, length and type of each weld. All materials to be brazed or soldered shall have connections indicated by symbols which are industry standards.

1.5.3.3 Contractors shall be responsible for all fabrication and for correct fitting of metal members. No material shall be fabricated or delivered to the site until the shop drawings have been reviewed and returned to the Contractor.

1.5.4 Weld Procedure Specifications: Provide Weld Procedure Specifications for all weld procedures to be used and Procedure Qualification Records for any weld procedures that are not prequalified.

1.6 FIELD MEASUREMENTS AND TEMPLATES:

Secure all field measurements required for proper and adequate fabrication and installation of the work. Furnish templates for exact location of items to be embedded in concrete and masonry and setting instructions required for all installation work.

1.7 DELIVERY AND STORAGE OF MATERIALS:

Deliver material in time to insure uninterrupted progress of the work. Materials shall be stored in a manner to preclude damage and permit ready access for inspection and identification of each shipment. Steel materials, either plain or fabricated, shall be stored above the ground upon platforms, pallets, skids, or other supports. Materials shall be kept free from dirt, grease, and other foreign matter, and shall be protected from corrosion. Material showing evidence of damage will be rejected and shall be immediately removed from the work.

PART 2 - PRODUCTS

2.1 MATERIALS:

2.1.1 Ferrous Metals:

2.1.1.1 Metal Surfaces, General: For fabrication of miscellaneous metal work which will be exposed to view**,** use only materials which are smooth and free of surface blemishes including pitting, seam marks, roller marks, rolled trade names and roughness.

2.1.1.2 Steel Plates, Shapes and Bars: ASTM A36.
2.1.1.3 Steel Bar Grating: ASTM A 569 or ASTM A 36.

2.1.1.4 Steel Tubing: Cold formed, ASTM A 500, Grade B.

2.1.1.5 Structural Steel Sheet: Hot-rolled, ASTM A 570; or cold-rolled ASTM A 611, Class 1; of grade required for design loading.

2.1.1.6 Galvanized Structural Steel Sheet: ASTM A 446, of grade required for design loading. Coating designation as indicated, or if not indicated, G90.

2.1.1.7 Steel Pipe: ASTM A 53; Type and grade (if applicable) as selected by fabricator and as required for design loading; hot-dipped galvanized; standard weight (schedule 40), unless otherwise indicated.

2.1.1.8 Gray Iron Castings: ASTM A 48, Class 30

2.1.1.9 Malleable Iron (Standard Cast): ASTM A 47, grade as selected by fabricator.

2.1.1.10 Handrail brackets for stainless steel pipe shall be round or flat top as directed by the Resident Engineer and the Architect 3-tap hold 3 1/4" diameter with standard or special filler plate as required as manufactured by R & B. Wagner, Inc. (p.34) (414) 461-2111 or approved equal stainless steel bracket unless otherwise indicated on drawings.

2.1.1.11 Brackets, Flanges and Anchors: Cast or formed metal of the same type material and finish as supported rails, unless otherwise indicated.

2.1.1.12 Fasteners:

2.1.1.12.1 General: Provide hot-dip galvanized fasteners for exterior use or where built into exterior walls. Select fasteners for the type, grade, and class required.

Bolts and Nuts: Regular hexagon head type, ASTM A 307, Grade A.
Lag Bolts: Square head type, FS FF-B-561.
Machine Screws: Cadmium plated steel, FS FF-S-92.
Wood Screws: Flat head carbon steel, FS FF-S-111.
Plain Washers: Round, carbon steel, FS FF-W-92.
Masonry Anchorage Devices: Expansion shields, FS FF-S-325.
Toggle Bolts: Tumble-wing type, FS FF-B-588, type, class and style as required.
Lock Washers: Helical spring type carbon steel, FS FF-W-84.

2.1.1.12.2 Contractor shall provide stainless steel anchors for highly corrosive environments.

2.1.1.13 Handrails and fasteners shall be ASTM A316 stainless steel.

2.1.2 Electrodes: All arc welding electrodes shall conform to AWS A5.1 or A5.5 E70XX.

2.1.3 Shop primer for steel, other than galvanized, shall meet Federal Specification TT-P-86G, Type III (red lead) or TT-P-645 (zinc chromate).

2.1.4 Galvanizing: Zinc coating shall conform to ASTM A123. Zinc coating for threaded products shall conform to ASTM A153. Treatment for damaged galvanized surfaces shall be Galvaloy, Galvicon or Drygalv, or equal. All steel is to be hot dipped galvanized prior to installation and paint. All holes in steel shall be drilled prior to HDG.

2.1.5 Concrete Inserts: Threaded or wedge type; galvanized ferrous castings, either malleable iron, ASTM A47, or cast steel, ASTM A27. Provide bolts, washers and shims as required, hot-dip galvanized, ASTM A153.

2.1.6 Pipe Sleeves: Pipe sleeves through concrete walls and footings shall be standard weight, wrought iron, mild steel, or cast iron sleeves with not less than 1/2 inch space all around between the sleeve and pipe.

2.2 FABRICATION - GENERAL:

2.2.1 Workmanship: Use materials of size and thickness indicated or, if not indicated, as required to produce strength and durability in finished product for use intended. Work to dimensions indicated or accepted on shop drawings, using proven details of fabrication and support. Use type of materials indicated or specified for various components of work.

2.2.2 Galvanizing: Provide a zinc coating for those items indicated or specified to be galvanized; All steel is to be hot dipped galvanized prior to installation and paint, as follows:

ASTM A 153 for galvanizing iron and steel hardware.

ASTM A 123 for galvanizing rolled, pressed and forged steel shapes, plates, bars and strip 1/8" thick and heavier.

ASTM A 386 for galvanizing assembled steel products.

2.3 ROUGH HARDWARE:

2.3.1 Furnish bent or otherwise custom fabricated bolts, plates, anchors, hangers, dowels and other miscellaneous steel and iron shapes as required for framing and supporting woodwork, and for anchoring or securing woodwork to concrete or other structures. Straight bolts and other stock rough hardware items are specified in Division-6 sections.

2.3.2 Fabricate items to sizes, shapes and dimensions required. Furnish malleable iron washers for heads and nuts which bear on wood structural connections; elsewhere, furnish steel washers.

2.4 MISCELLANEOUS FRAMING AND SUPPORTS:

2.4.1 Provide miscellaneous steel framing and supports, which are not a part of structural steel framework, as, required to complete work.

2.4.2 Fabricate miscellaneous units to sizes, shapes and profiles indicated or, if not indicated, of required dimensions to receive adjacent other work to be retained by framing. Except as otherwise indicated, fabricate from structural steel shapes, plates and steel bars, of welded construction using mitered joints for field connection. Cut, drill and tap units to receive hardware and similar items.

2.4.3 Equip units with integrally welded anchors for casting into concrete or building into masonry. Furnish inserts if units must be installed after concrete is placed. Except as otherwise indicated, space anchors 24" o.c. and provide minimum anchor units of 1-1/4" x 1/4" x 8" steel straps. Galvanize exterior miscellaneous frames and supports where indicated.

2.5 MISCELLANEOUS STEEL TRIM:

Provide shapes and sizes for profiles shown. Unless otherwise indicated, fabricate units from structural steel shapes, plates and steel bars, with continuously welded joints and smooth exposed edges. Use concealed field splices wherever possible. Provide cutouts, fittings, and anchorages as required for coordination of assembly and installation with other work. Hot-dip galvanize miscellaneous steel trim.

2.6 STEEL BAR, PIPE, CABLE RAIL RAILINGS AND HANDRAILS:

See Section 05 52 00

PART 3 - EXECUTION

3.1 PREPARATION:

3.1.1 Field Measurements: Take field measurements prior to preparation of shop drawings and fabrication, where possible. Do not delay job progress; allow for trimming and fitting where taking field measurements before fabrication might avoid delaying work.

3.1.2 Coordinate and furnish anchorages, setting drawings, diagrams, templates, instructions, and directions for installation of anchorages, such as concrete inserts, sleeves, anchor bolts, safety tread nosing, and miscellaneous items having integral anchors, which are to be embedded in concrete or masonry construction. Coordinate delivery of such items to project site.

3.2 INSTALLATION:

3.2.1 General:

3.2.1.1 Miscellaneous metal items shall be installed as rapidly as the progress of other work will permit. Splices and field connections shall be made with bolts, except where welding or brazing is indicated or approved on the shop drawings. Fasteners shall be installed as hereinafter. Metal work shall be set accurately at the established lines and levels. Installation shall be in strict accordance with approved shop drawings and actual conditions, true and horizontal or perpendicular as the case may be, level and square with angles and edges parallel with related lines of the building.

3.2.1.2 Fastening to In-Place Construction: Provide anchorage devices and fasteners where necessary for securing miscellaneous metal fabrications to in-place construction; including threaded fasteners for concrete and masonry inserts, toggle bolts, through-bolts, lag bolts, wood screws and other connectors as required.

3.2.1.3 Cutting, Fitting and Placement: Perform cutting, drilling and fitting required for installation of miscellaneous metal work accurately in location, alignment and elevation, plumb, level, true and free of rack, measured from established lines and levels. Provide temporary bracing or anchors in formwork for items, which are to be built into concrete, masonry, or similar construction.

3.2.1.4 Fit exposed connections accurately together to form tight hairline joints. Weld connections, which are not to be left as exposed joints, but cannot be shop welded because of shipping size limitations. Grind all welds and exposed joints smooth and touch-up shop paint coat. Do not weld, cut or abrade the surfaces of exterior units which have been hot-dip galvanized after fabrication, and are intended for bolted or screwed field connections.

3.2.1.5 After assembly, the various members forming parts of a completed frame shall be aligned and adjusted accurately before being fastened. Tolerances shall conform to the applicable requirements of AISC "Code of Standard Practice". Contact shall be cleaned before the members are assembled. Poor matching of holes shall be corrected by drilling to the next larger size.

3.2.2 Field Welding: Comply with AWS Code for procedures of manual shielded metal-arc welding, appearance and quality of welds made, and methods used in correcting welding work.

3.2.3 Setting Loose Plates: Clean concrete and masonry bearing surfaces of any bond-reducing materials, and roughen to improve bond to surfaces. Clean bottom surface of bearing plates.

3.2.3.1 Set loose leveling and bearing plates on wedges, or other adjustable devices. After the bearing members have been positioned and plumbed, tighten the anchor bolts. Do not remove wedges or shims, but if protruding, cut-off flush with the edge of the bearing plate before packing with grout. Use metallic non-shrink grout.

3.2.3.2 Pack grout solidly between bearing surfaces and templates to ensure that no voids remain. (See Section 03 30 00 for grout strength.)

3.2.4 Steel Bar, Pipe, Cable Rail Railings and Handrails:
See Section 05 52 00

3.2.5 Touch up all damaged galvanized finishes due to installation, welding, threading or other work with treatment specified herein.

3.3 ADJUST AND CLEAN:

3.3.1 Touch-up Painting: Immediately after erection, clean field welds, bolted connections, and abraded areas and paint exposed areas with zinc-rich paint. Repair factory finished surfaces as recommended by manufacturer.

3.3.2 Apply by brush or spray to provide a minimum dry film thickness of 2.0 mils.

END OF SECTION 05 50 00

SECTION 05 52 00 – EXTERIOR HANDRAILS AND GUARDRAILS

PART 1 - GENERAL

1.1 DESCRIPTION:

1.1.1 Work Included:

Field measurement
Provide and install pipe handrails and Stainless steel cable railings
Core Drilling and Grouting
Provide and install Tubular Steel handrails and guardrails
Surface preparation and finish
Miscellaneous handrails, rails, posts, fittings, fasteners, etc., as required for a complete system.

1.2 QUALITY ASSURANCE:

1.2.1 Applicable Standards: Apply the current or latest editions of the standards described below:

"AWS" – "Code for Arc and Gas Welding in Building Construction" of American Welding Society, AWS D1.0

"ASTM" – American Society for Testing and Materials

"SSPS" – "Near White Blast Cleaning"; Steel Structures Painting Council

"UBC" – Uniform Building Code

NAAMM MFM, "Metal Finishes Manual.

1.2.2 Field Measurement: Make all field measurements as required prior to fabrication and installation.

1.2.3 Shop Assembly: Preassemble items in shop to greatest extent possible to minimize field splicing and assembly. Disassemble units only as necessary for shipping and handling limitations. Clearly mark units for reassembly and coordination installation.

1.2.4 Mock-Ups: Prior to installation of the work, fabricate and erect mock-ups for each type of finish and application required to verify selections made under sample submittals and to demonstrate aesthetic effects as well as qualities of materials and execution. Build mock-ups to comply with the following requirements, using materials indicated for final unit of work. Locate mock-ups on site in location and of size indicated or, if not indicated, as directed by the Resident Engineer and the Architect. Demonstrate the proposed range of aesthetic effects and workmanship to be expected in the completed work. Obtain the Resident Engineer and the Architect's acceptance of mock-ups before start of final unit of work. Retain and maintain mock-ups during construction in undisturbed condition as a standard for judging completed unit of work.

1.2.4.1 When directed, demolish and remove mock-ups from the Project site.

1.2.4.2 Accepted mock-ups in undisturbed condition at time of Substantial Completion may become part of completed unit of work if approved by the Resident Engineer and the Architect.

1.3 SUBMITTALS:

1.3.1 Shop Drawings:

1.3.1.1 Submit shop drawings for all handrails and guardrails showing sizes for all materials, welds, connections, hardware and appurtenances. Do not begin fabrication until return receipt of approved shop drawings from Owner or Landscape Architect.

1.3.1.2 Verify all measurements at the job. Show dimensions, sizes, thicknesses, gauges, finishes, joining, attachments, and relationship of work to adjoining construction. Where items must fit and coordinate with finished surfaces and/or constructed spaces, take measurements at site and not from drawings.

1.3.1.3 Where concrete, masonry or other materials must be sent to exact locations to receive work, furnish assistance and direction necessary to permit other trades to properly locate their work.

1.3.1.4 Welded Connectors, Concrete, or Masonry Inserts: Where required to receive work, show exact locations and furnish all such Drawings to the trades responsible for installing the connectors or inserts.

1.3.1.5 Catalogue Work Sheets: Show illustrated cuts of item to be furnished, scaled details and dimensions.

1.3.2 Samples:

1.3.2.1 Color Selection: Submit manufacturer's color charts showing the full range of colors available for products with factory-applied color finishes.

1.3.2.2 Finish Selection: Provide sections of railing or flat sheet metal which depict available mechanical surface finishes.

1.3.2.3 Verification Samples: For each type of exposed finish required, prepared on components indicated below and of same thickness and metal indicated for the work. If finishes involve normal color and texture variations, include sample sets showing the full range of variations expected.

1.3.2.4 6 inch (152 mm) long sections of each different linear railing member, including handrails and top rails.

1.4 PRODUCT DELIVERY, STORAGE, AND HANDLING:

1.4.1 Delivery: Deliver fabricated units and components completely identified per shop drawings. Protect surfaces from damage during shipping. Inspect work for damage upon delivery to site. No materials with defects on exposed finishes will be accepted.

1.4.2 Protection: Protect work at site from damage and from weather until installed and all work has been accepted. Replace all damaged work at no cost to Owner.

1.5 JOB CONDITIONS:

1.5.1 Examine the conditions in which the work is to be installed. Do not proceed with the work until unsatisfactory conditions have been corrected.

1.6 COORDINATION:

1.6.1 Furnish all anchors, fastenings, sleeves, setting templates and layouts affecting or installed in the work of other trades.

1.6.2 Where items must be incorporated or built into adjacent work, deliver to trade responsible for such work in sufficient time that progress of work is not delayed. Be responsible to proper location of such items.

PART 2 - PRODUCTS

2.1 BASIC MATERIAL AND ACCESSORIES:

2.1.1 Galvanized Steel: Approved material, no less than .120 wall thickness or solid bar as detailed. All exterior steel is to be hot dipped galvanized prior to installation and paint. All holes in steel shall be drilled prior to HDG.

2.1.2 Fastenings: All bolts, nuts, screws, washers, and any other fastenings necessary for proper erection of items specified herein.

2.1.2.1 Ferrous Metal: Galvanized

2.1.2.2 Other Metals: Zinc-coated or cadmium-plated for exterior use.

2.1.3 Concrete Inserts: ASTM A47 Malleable iron or ASTM A27 cast steel, threaded or wedge type, galvanized ferrous castings. Provide ASTM A153 hot-dipped galvanized bolts, washers and shims as required.

2.1.4 Welding Electrodes: AWS Code D1.0.

2.1.5 Stainless Steel: Provide grade and type designated below for each form required:

2.1.5.1 Castings: ASTM A743/A743M, Grade CF 8M.

2.1.5.2 Plate: ASTM A666, Type 316L.

2.1.5.3 Wire Rope: 1-by-19 cable conforming to ASTM A492, Type 316.

2.1.6 Wire Rope Fittings: Provide connectors of types indicated, fabricated from stainless steel, and with capability to sustain, without failure, a load equal to the minimum breaking strength of the wire rope with which they are used.

2.2 SPECIALLY FABRICATED PRODUCTS:

2.2.1 Stainless Steel Handrails:

2.2.1.1 Fabricate off-site in largest sections practicable. Conceal all field joints.

2.2.2 Flat bar, Tubular and Steel Cable Rail System Handrails and Guardrails:

2.2.2.1 Fabricate off-site in largest sections practicable. Conceal all field joints.

2.3 FINISHES: (Review drawings for all finishes)

2.3.1 Stainless Steel Handrails:

2.3.1.1 Prep and clean all surfaces. .

2.3.2 Flat bar, Tubular and Steel Cable Rail System handrails and Guardrails:

2.3.2.1 Prep all surfaces and apply paint per Section 09 91 00.

2.3.2.2 Stainless Steel Finishes: As fabricated mill finish.

2.4 GROUT:

2.4.1 Non-shrinking Master Builder's "Embecco", Conrad Sovig's "Metal-Mxs Grout", Sonneborn's "Ferrolith G Redi-Mixed Group", "Upco's" "Upcon", "Por-Rok", or equal.

PART 3 – EXECUTION

3.1.1 CONDITION OF SURFACE:

3.1.2 Inspect all surfaces and footings to receive handrails or guardrails and report all defects which would interfere with this installation.

3.2 FABRICATION:

3.2.1 Fabricate all items in the shop and erect in the field by workmen specifically skilled in such work.

3.2.2 Provide all surfaces free of file marks, dents, hammer marks, wire edges or any unsightly surface defects.

3.3 WORKMANSHIP:

3.3.1 Set all work plumb, true, rigid and neatly trimmed out. Miter corners and angles of exposed moldings and frames unless otherwise noted.

3.3.2 Fit exposed connections accurately together to form tight hairline joints.

3.4 ATTACHMENTS:

3.4.1 Do all cutting, shearing, drilling, punching, threading, tapping, etc., required for site metalwork or for attachment of adjacent work. Drill or punch holes; do not use cutting torch. Shearing and punching shall leave true lines and surfaces.

3.4.2 Set all railings and similar items shown or required to be set in sleeves with quick setting non-shrink anchor cement. Unless otherwise noted, size sleeves for approximately ¼ in. clearance all around.

3.5 OTHER CONNECTORS:

3.5.1 Make all permanent connections in metal surfaces using welds where at all possible.

3.5.2 Do not use bolts or screws where they can be avoided.

3.6 WELDING:

3.6.1 Standards:

3.6.1.1 AWS Code D1.0.

3.6.1.2 Welding only by operators experienced in the type of work indicated.

3.6.2 Preparation: Remove all rust, paint, scale and other foreign matter. Wire brush all flame-cut edges. Clamp members as required and alternate welds, all as necessary to prevent warping or misalignment.

3.6.3 Exposed Welds: Uniformly make and grind smooth all welds normally exposed to view in the finish work.

3.6.4 Do not weld galvanized units after hot-dipping.

3.6.5 Faulty and Defective Welding: Chip out and replace all welding showing cracks, slag inclusion, lack of fusion, bad undercut or other defect ascertained by visual or other means of inspection. Replace and reweld at no cost to Owner.

3.6.6 Field Welding:

3.6.6.1 Procedure: Comply with AWS code of manual shielded metal-arc welding, appearance and quality of welds made, and methods used in correcting welding work.

3.6.6.2 Protection: Protect all adjacent surfaces from damage due to weld sparks, spatter, or tramp metal.

3.7 SURFACE TREATMENT AND PROTECTIVE COATINGS:

3.7.1 Thoroughly clean all mill scale, dirt, grease and other foreign matter from ferrous metal prior to any final finishing.

3.7.2 Hot dip galvanize all material and pieces.

3.8 PAINTING:

3.8.1 After material has been properly cleaned (and etched if galvanized), immediately apply primer and or paint as specified in other section. Apply all paints per manufacturer's current printed instructions. Spot paint all abrasions and field connections after assembly. Dry shop coats prior to shipment to job site.

3.9 TOUCH-UP AND PROTECTION:

3.9.1 Touch-up: Immediately after erection, clean field welds, bolted connections and abraded areas of shop paint. Paint exposed areas with same material to same dry-film thickness as used for shop paintings.

3.9.2 Repair cuts or scratches in galvanized surfaces with Galvilite, "Galv-Alloy" or equal product that is compatible with original galvanized finish.

3.9.3 Protection: Protect the work from all damage or discoloration until acceptance of work.

3.10 CLEAN-UP:

3.10.1 Keep all areas of work clean, neat and orderly at all times. Keep paved areas clean during installation.

3.10.2 Clean up and remove all debris from the entire work prior to Final Acceptance to satisfaction of Landscape Architect.

END OF SECTION 05 52 00

SECTION 06 10 00 - ROUGH CARPENTRY

PART 1 - GENERAL

1.1 RELATED DOCUMENTS:

1.1.1 Drawings and general provisions of Contract, including General and Supplementary Conditions and Division 1 Specification Sections apply to work of this section.

1.2 DESCRIPTION OF WORK:

1.2.1 Provide framing lumber, plywood sheathing, blocking, plates, curbs, etc. and incidental carpentry work supporting other work. Furnish and install standard product rough hardware and specially fabricated rough hardware in connection with work of this section.

1.2.2 The following categories of work are included under other sections of these specifications:

1.2.2.1 Fabrication of special rough hardware that are in connection with work of this section.

1.2.2.2 Acoustical and insulation work.

1.2.2.3 Concrete formwork.

1.3 QUALITY ASSURANCE:

1.3.1 Grading Standards: "Grading Rules for Western Lumber, 5th Edition." "Product Standard PS 1-83 for Softwood Plywood/Construction and Industrial." All lumber and plywood shall be grade-marked. All lumber and plywood shall be grade-stamped. Do not mark lumber in an area where it is scheduled to be exposed.

1.3.2 Codes: All work shall be executed in accordance with Chapter 23 of the "California Building Code, current edition (CBC)".

1.4 SUBMITTALS:

1.4.1 Submit the following: quantities and procedures are as specified in Section 01 33 00.

1.4.1.1 Wood treatment data including treatment plant's certificate of compliance with indicated requirements.

1.4.1.2 Calculations and drawings of pre-fabricated wood components and their respective hangers/connections, signed by a California registered civil engineer.

1.5 DELIVERIES AND STORAGE:

1.5.1 Lumber shall be piled and protected to ensure proper protection. Material having

warps, crooks, and other defects shall not be incorporated into the work, even though such defects may develop after material is delivered to site.

1.6 PRE-INSTALLATION MEETING:

1.6.1 Prior to commencing the work of this section, the contractor shall schedule and attend a meeting at the job site to discuss conformance with requirements of the Contract Documents. Request attendance of representative from the Resident Engineer and the Architect, Contractor, subcontractors, and other parties who are involved.

PART 2 - PRODUCTS

2.1 FRAMING LUMBER:

2.1.1 Unless otherwise noted on Structural Drawings and Structural Notes concealed framing lumber shall be Douglas Fir No. 2 (1450fb and 19% or less moisture content). Provide lumber species and grade as noted on structural notes in structural drawings.

2.2 SHEATHING:

2.2.1 Unless otherwise noted on Structural drawings and Structural Notes plywood shall be 1/2" C-D with exterior glue with Identification Index of 24/16. Provide APA rated sheathing as noted on structural notes on structural drawings. Provide fire-retardant treated plywood sheathing where indicated.

2.3 PLYWOOD BACKING FOR ELECTRICAL AND TELEPHONE EQUIPMENT:

2.3.1 APA C-D Plugged Int. with exterior glue, fire-retardant treated, 3/4" thick except as otherwise indicated.

2.4 LUMBER FOR MISCELLANEOUS USES:

2.4.1 Unless otherwise indicated, provide standard grade lumber of other works, including cant strips, nailers, blocking, and other similar members.

2.4.2 Lumber used for exposed rafters and fascias shall be Douglas Fir, free of heart center and resawn. Coordinate priming and finish as required with Section 09 91 00.

2.5 Preservative pressure-treated lumber and plywood with water-borne preservatives to comply with AWPA C2 and C9, respectively, and with requirements indicated below:

2.5.1 Wood for Above-Ground Use: AWPB LP-2.

2.5.2 Treat cants, nailers, blocking, curbs, stripping and similar items in contact with roofing, flashing, and vapor barrier.

2.5.3 Treat blocking, sleepers, and similar items in direct contact with concrete.

2.6 STANDARD PRODUCT ROUGH HARDWARE:

2.6.1 Simpson "Strong-Tie Connectors", unless otherwise specified, of size, type, material, suited to application shown. Prior approved substitution shall have an equal or better rating acceptable to ICC and meet requirements of the CBC. All hardware to be painted finish or hot-dip galvanized.

2.7 OTHER ROUGH HARDWARE:

2.7.1 Common Nails: Use unless otherwise noted on drawings. Contractor shall use galvanized or aluminum on exterior where exposed to weather and exterior covered only by paint.

2.7.2 Screws: Use unless otherwise noted on drawings. Contractor shall use galvanized on exterior where exposed to weather and exterior covered only by paint.

2.7.3 Bolts and Nuts: Unless otherwise noted or specified, use unfinished American Standard. Unless otherwise noted on drawings, Contractor shall use galvanized at exterior where exposed to weather and exterior covered only by paint. Provide with matching cut or pressed steel washers for both bolts and nuts where bearing on wood, unless otherwise shown.

2.7.4 Connectors Into Concrete or Masonry: Powder-activated fastening system prior approved equal to "Ramset" or "Hilti". Anchor shall be installed to depth of embedment recommended by manufacturer. Anchors shall be galvanized where exposed to weather. Concrete nails are not acceptable.

2.7.5 Construction Adhesive: Adhesive shall conform to APA Specification AFG-01.

2.7.6 Mastic: As specified in Division 07 11 00.

2.7.7 Connector Plates: Contractor shall use galvanized at exterior where exposed to weather and covered only by paint.

PART 3 - EXECUTION

3.1 FRAMING:

3.1.1 Verify all measurements and dimensions at the job. Set framing members and assemblies accurately to required lines and levels, and to arrangements shown. Accurately and neatly cut and fit work, and strongly nail, spike, bolt or otherwise secure in place, in workmanlike manner. Erect roofs level or sloped as noted, aligned in planes except where "warping" is specifically noted. Do not splice structural wood framing members between bearing points or supports. Have capable mechanics do cutting, assembling, and erecting of wood members. Secure approval before cutting any wood members that may weaken structure. Do all cutting, framing and fitting necessary for accommodation of work of other trades. All blocking for structural members shall be as detailed and noted in structural drawings. Exercise due care in placing framing so that structural and other important members do not require cutting for openings, pipes, vents, conduits, ducts, or like work. Finish bearing surfaces on which wood structural members are to rest to give full, true, and even support. Do not use wedges or shims to overcome faulty work.

Remove and replace wood members, which have been split or otherwise damaged to such an extent as to materially impair their strength, as directed at no extra cost to Owner. Provide wood grounds, strips and blocking, indicated or required by conditions, of thickness and shape required to receive finish materials. Provide all blocking necessary for toilet accessories. Provide wood framing for air conditioning curbs as detailed or by manufacturer's standard literature.

3.2 CONNECTIONS:

3.2.1 Term "rough hardware" includes bolts, nails, lag screws, washers, plates, and similar items employed in erection and construction of rough work, bolt anchorages embedded in concrete to concrete trade prior to erection of forms. Provide rough hardware as shown and required to complete work, including installation of such items furnished under other sections.

3.3 NAILING:

3.3.1 Drive nails not closer together than 1/2 their length unless driven in drilled holes, nor closer to edge of member than 1/4 its length; drill holes slightly smaller than nail diameters when necessary to prevent splitting. Penetrate second or farther member not less than 1/2 length of nail. Use common nails except where other nails are shown or specified. Refer to Nailing schedule in CBC unless otherwise noted in Structural Notes or Structural Drawings.

3.4 BOLTS AND NUTS:

3.4.1 Provide malleable or cut steel washers under heads and nuts except where bearing on steel plates or other steel attachments, or where flat-head countersunk bolts are shown. Clamp members together and bore holes of same diameter as bolts, true to line; drive bolts in place, and draw nuts up tight. Immediately prior to enclosing bolts with finish or, if left exposed, upon completion of other work, draw bolts tight again. Holes at anchor bolts embedded in concrete may be 1/16" larger than bolt diameter.

3.5 SCREWS:

3.5.1 Screw (do not drive) lag and wood screws into place. Bore hole to receive lag screw, first of same diameter and depth as shank, and then continue to depth equal to length of screw with diameter equal to base of thread. Screw shall penetrate a distance equal to at least 7 times diameter of screw shank into far member. Install washer under each lag screw head bearing on wood.

3.6 PLYWOOD SHEATHING:

3.6.1 Arrange so that no piece is less than 12" wide in either face dimension. Install with face grain across supports, end joints over joists and staggered, and provide blocking at unsupported edges as noted. Nail as noted using specified nails.

3.6.2 Provide continuous bead of construction adhesive between wood sheathing and wood supporting member at all locations concurrent with nailing.

3.7 STRIPPING:

3.7.1 Provide as shown and required.

3.8 GROUNDS:

3.8.1 Install over lath, sizes as shown or required, secured at maximum 16" intervals, accurately set to required finish lines and planes.

3.9 TREATED LUMBER:

3.9.1 Contractor shall install pre-treated lumber at all locations of foundation attachment where concrete and/or masonry contacts plates or ledgers. Wherever necessary to cut, notch, dap, drill or frame treated lumber, treat newly cut or bored surfaces with two heavy coats of same preservative used in original treatment, minimum 1/4" depth of penetration.

3.9.2 Contractor shall place all exterior wall sill plates in mastic where interior finish floor slab is installed or called to be less than 1/2" above finish floor.

3.10 CLEAN-UP: During progress of work, remove from site discarded wood scrap daily.

END OF SECTION 06 10 00

SECTION 06 18 00 - GLUED LAMINATED STRUCTURAL UNITS

PART 1 - GENERAL

1.1 RELATED DOCUMENTS AND DESCRIPTION OF WORK:

The work includes the furnishing and installing of glued laminated structural units as shown and noted on the drawings and as specified. The Conditions of the Contract and Division 1 apply to this section as fully as if repeated herein.

1.1.2 Coordinate with fabrication and erection/delivery of structural steel supports for timely, installation of glue laminated units.

1.2 QUALITY ASSURANCE:

1.2.1 Materials, manufacturer and quality control shall be in conformance with Voluntary Product Standard, "Structural Glued Laminated Timber" (ANSI/AITC A190.1) and **"California Building Code, current edition (CBC)",** Standards Chapter 23.

1.2.2 Members shall be marked with a Quality Mark indicating conformance with Product Standard, "Structural Glued Laminated Timber" (ANSI/AITC A190.1). Members to remain exposed shall not be marked however shall include a certificate of performance.

1.3 SUBMITTALS:

1.3.1 Submittal procedures and quantities are specified in Section 01 33 00.

1.3.2 Product Data:

1.3.2.1 Certificate of Conformance shall be provided to indicate conformance with "Structural Glued Laminated Timber" (ANSI/AITC A190.1), prior to delivery of glue laminiated members to the job site.

1.3.2.2 Submit manufacturer's data, specifications and installation instructions covering lumber, adhesives, fabrication process, accessories and protection.

1.3.2.3 Shop Drawings: Submit fully detailed shop drawings showing size, camber, and location of glued laminated structural unit, method of truss fabrication and installation procedure, and connection details to the Resident Engineer and the Architect for review before fabrication.

1.3.2.4 Samples: Provide 30" x 12" x 12" samples as required by the Resident Engineer and the Architect.

1.4 DELIVERY, STORAGE AND HANDLING:

1.4.1 Keep glued laminated structural units dry during delivery, storage, handling, and erection by maintaining factory-applied protective covering in weather-tight and

light-proof condition, or by applying other weathertight protection. Members that are to be left exposed are to be individually wrapped. Maintain protective covering until building enclosure is completed to extent necessary for protection, and until final finishing of exterior work is ready to proceed. Do not store units in areas of either excessively high or excessively low relative humidity; comply with manufacturer's instructions.

1.4.2 Time delivery and installation to avoid extended on-site storage, and to avoid delaying work of other trades.

PART 2 - PRODUCTS

2.1 MATERIALS:

2.1.1 Lumber: Lamination shall be 2" nominal. Laminating combinations shall meet the requirements of "Structural Glued Laminated Timber", ANSI/AITC A190.1 and shall provide allowable design values as noted in structural drawings.

2.1.2 Adhesives shall be as noted in structural drawings. All members exposed to weather shall be fabricated with wet use adhesive using heart wood selected for resistance to decay. Use non-toxic adhesive at exposed interior locations.

2.1.3 Surface Sealer: Manufacturer's standard translucent penetrating wood sealer.

2.1.4 End Sealer: Manufacturer's standard transparent, colorless wood sealer, effective in retarding transmission of moisture at cross-grain cuts.

2.1.5 Connectors, Anchors and Accessories: See Section 06 10 00.

2.1.6 Species: Species shall be as noted in structural drawings.

2.1.7 All exposed glue-laminated members shall be grade stamped on the top or ends. All grade stamps within view of public shall be removed by sanding after framing inspection approval by inspector. Sanding to match light sand-blast finish, called for in paragraph 2.2.2.

2.1.8 All blocking at exposed locations to match adjacent exposed glue-laminated member.

2.2 FABRICATION:

2.2.1 Comply with A190.1 in providing units indicated; where dimensions are not completely documented, provide manufacturer's standard sizes and shapes required to fulfill indicated performances.

2.2.2 Appearance Grade: Provide Industrial Grade for concealed members and **Premium Grade for exposed members. Provide a light sand-blast finish and wood inserts for all exposed premium grade members.** Putty shall not be used on exposed members.

2.2.3 Camber: Required camber for fabrication of each member is shown on drawings.

2.2.4 End Cut Sealing: Immediately after end-cutting each member to final length, apply a saturation coat of end sealer to ends and other cross-cut surfaces.

2.2.5 Seal Coat: After fabrication and sanding of each unit, and end-coat sealing, apply a heavy saturation coat of penetrating sealer on surfaces of each unit, except for treated wood where treatment has included a water repellent.

2.2.6 Factory Applied Protection: Before shipping or exposing to outdoor conditions, individually wrap each member with manufacturer's standard, opaque, durable, water-resistant, plastic-coated paper covering per AITC III recommended practice for protection of structural glued laminated timber during transit, storage and erection.

2.2.7 Notching: Members shall not be notched unless expressly permitted by Engineer.

2.2.8 See additional structural requirements on general structural notes in drawings.

PART 3 - EXECUTION

3.1 INSTALLATION:

3.1.1 AITC or Gold Seal approved fabricator's certificate of Conformance shall be submitted to the Building Inspector prior to installation.

3.1.2 Cutting: Avoid cutting members during erection, to greatest extent possible. Except for fastener drilling and other minor cutting, coat cuts with specified end sealer. Laminator shall show all special cuts on shop drawings and shall fabricate them in shop. The accurate drilling of holes for bolting is critical. As such, holes shall be 1/8" larger than the specified bolt. Holes shall be drilled through member from one side using a jig capable of accurately locating a straight hole perpendicular to the face of the member.

3.1.3 Provide temporary bracing of members until permanent lateral support and sheathing are in place.

3.1.4 Temporary construction loads which cause stresses beyond design limits are not permitted.

3.1.5 Members shall be installed in accordance with plans, details, manufacturer's instructions, and AITC 108, "Standard for Heavy Timber Construction". Miscellaneous steel connectors, anchors, and accessories shall be provided as indicated. Do not drop or dump members. Use fabric or plastic slings, and protective blocking or padding with chains or cables. Protect from soiling, abrasions, and/or injury to shaped edges and/or sharp corners.

3.1.6 Install plugs over counter sunk bolt heads and nuts after framing inspection. Plugs shall match surrounding wood for color, texture and direction of grain.

3.2 PROTECTION

3.2.1 Do not remove wrapping on individually wrapped members until it will serve no useful purpose, including protection from weather, soiling and damage from work of other trades.

3.2.2 Coordinate removal of wrapping with finishing work specified in the Division 9 sections. Retain wrapping wherever it can serve as a painting shield.

3.3 UNUSED CUT PORTIONS of the glue-lam shall be saved and rewrapped and remain on the job site for future use by the Resident Engineer and the Architect.

END OF SECTION 06 18 00

SECTION 06 20 00 - FINISH CARPENTRY

PART 1 - GENERAL

1.1 RELATED DOCUMENTS:

Drawings and general provisions of Contract including General and Supplementary Conditions and Division-1 Specification sections, apply to work of this section.

1.2 DESCRIPTION OF WORK:

The work includes furnishing and installing all finish lumber as indicated on drawings, cabinets, countertops, all items of non-structural carpentry and millwork as indicated on drawings and as specified herein.

1.3 QUALITY ASSURANCE:

1.3.1 Quality Standard: Architectural Woodwork Standards (AWS), latest edition, published jointly by the Woodwork Institute, Architectural Woodwork Institute, and the Architectural Woodwork Manufacturers' Association of Canada.

1.3.2 Any item not given a specific quality grade shall be "premium" grade as defined in the latest edition of the Architectural Woodwork Standards (AWS).

1.3.2.1 Before delivery to the job-site issue a Certified Compliance Certificate indicating the millwork products being furnished for this project, and certifying that these products fully meet all the requirements of the AWS Grade or Grades specified and of the plans and specifications.

1.3.2.3 Each elevation of casework shall bear a Certified Compliance label.

1.3.2.4 Each countertop shall bear the Certified Compliance label.

1.3.2.5 On completion of installation provide a Woodwork Institute Certificate of Compliance certifying that the installation of the products included in this section meets the requirements of the AWS for the grade or grades specified.

1.3.2.6 The costs of the Woodwork Institute Certified Compliance Program are the responsibility of the millwork manufacturer and/or installer, and shall be included in their bid.

1.3.4 All colors to be selected by the Resident Engineer and the Architect.

1.4 SUBMITTALS:

1.4.1 Submittal procedures and quantities are specified in Section 01 33 00.

1.4.2 Product data: Submit manufacturer's specifications and installation instructions for each item of factory-fabricated paneling.

1.4.3 Wood Treatment Data: Submit chemical treatment manufacturer's instructions for handling, storage, installation and finishing treated materials.

1.4.3.1 Dip Treatment: For each type specified, include certification by treating plant stating chemical solutions used, submersion period and conformance with specified standards.

1.4.4 Shop Drawings: Submit shop drawings meeting the requirements of the AWS.

1.4.4.1 Show the location of each item, dimensioned plans and elevations, large scale details, attachment devices and other components.

1.4.4.2 Show the location of backing required inside walls for casework installation on each shop drawing elevation.

1.4.4.3 The first page of the drawings shall bear a Woodwork Institute Certified Compliance label.

1.5 PRODUCT DELIVERY, STORAGE AND HANDLING:

1.5.1 Protect finish carpentry materials during transit, delivery, storage and handling to prevent damage, soiling and deterioration.

1.5.2 Do not deliver finish carpentry materials, until painting, wet work, grinding and similar operations which could damage, soil or deteriorate woodwork have been completed in installation areas. If, due to unforeseen circumstances, finish carpentry materials must be stored in other than installation areas, store only in areas meeting requirements specified for installation areas.

1.6 JOB CONDITIONS:

1.6.1 The Contractor shall provide a clean storage area as required by the AWS.

1.6.2 Do not deliver materials until the HVAC is on and balanced, and maintaining the temperature and humidity at occupancy levels.

PART 2 - PRODUCTS

2.1 WOOD PRODUCT AND QUALITY STANDARDS (FINISH LUMBER):

2.1.1 Softwood Lumber Standards: Comply with PS 20 and with applicable grading rules of the respective grading and inspecting agency for the species and product indicated.

2.1.2 Exposed Plywood Standard: Shall be clear white birch veneer - tight grain rift-sawn to match adjacent surfaces. Comply with PS 1/ANSI A199.

2.1.3 Exposed Hardwood Lumber Standard: Shall be clear white birch, free of heart center - stain grade. Comply with National Hardwood Lumber Association (NHLA) rules.

2.1.4 Exposed Hardwood Plywood Standard: Shall be clear white birch veneer - tight grain rift-sawn. Comply with PS 51. Exterior grade where detailed.

2.1.5 Woodworking Standard: Where indicated for a specific product, comply with specified provision of the AWS.

2.1.6 Glued-up Lumber Standard: Comply with PS 56.

2.1.7 Finish Wood Shelving: 3/4" plywood Exterior & INT-DFPA, A-B All shelves to have hardwood edges or plastic laminate edge to match the shelf color.

2.1.8 Exposed Hardwood Wood Trim: Shall be kiln dried (Kd) clear white birch free of heart center - stain grade to match adjacent stain surfaces.

2.1.9 Exposed Softwood Wood Trim: Shall be Idaho White Pine, paint to match at adjacent paint surfaces.

2.1.10 Standing and Running Floor Base Trim: Idaho white pine, 1" x 6" unless otherwise noted or detailed, "choice" grade, complying with WWPA.

2.2 MATERIALS (FINISH LUMBER):

2.2.1 General:

2.2.1.1 Nominal sizes are indicated, except as shown by detailed dimensions. Provide dressed or worked and dressed lumber, as applicable, manufactured to the actual sizes as required by PS 20 or to actual sizes and pattern as shown, unless otherwise indicated.

2.2.1.2 Moisture Content of Softwood Lumber: Provide seasoned (KD) lumber having a moisture content from time of manufacture until time of installation not greater than values required by the applicable grading rules of the respective grading and inspecting agency for the species and product indicated.

2.2.1.3 Lumber for Transparent Finish (Stained or Clear): Use pieces made of solid lumber stock from hardwood products as specified. Lumber used for clear or stain finish shall be "select tight knot stain grade."

2.2.1.4 Lumber for Painted Finish: Use pieces made of solid lumber stock.

2.2.2 Plastic Laminate: Provide high pressure decorative laminate complying with NEMA LD3 in color, pattern and finish as indicated, or as selected by the Resident Engineer and the Architect, manufactured by Pionite, Nevamar, Wilsonart or approved equal. See Specification 09 06 00 for callout. Plastic shall conform to specifications for laminated thermosetting decorative as set for the by NEMA publication LDI, Type 1, Class 1 and 2. Core material shall be Hardwood plywood with a non telegraphing grain with no voids in second ply. Glue laminated plastic covering to the core material with Type I (fully waterproof) adhesive.

2.2.3 Miscellaneous Materials:

2.2.3.1 Fasteners and Anchorages: Provide nails, screws and other anchoring devices of the type, size, material and finish required for application indicated to provide secure attachment, concealed where possible, and complying with applicable Federal Specifications. Where finish carpentry is exposed on exterior or in areas of high relative humidity, provide fasteners

and anchorages with a hot-dipped zinc coating (ASTM A 153).

2.2.4 Wood Treatment:

2.2.4.1 Preservative Treatment (Trt-Wd): Following basic fabrication provide treatment of finish carpentry items indicated to receive preservative treatment with a 5 percent solution of pentachlorophenol, with vehicle which will not interfere with finish application and will produce minimum effect upon appearance. Apply brush coat on surfaces cut after treatment.

2.2.4.2 Kiln-dry treated wood to a maximum moisture content of 6% to 12%.

2.2.4.3 Inspect each piece of lumber and plywood or each unit of finish carpentry after drying; do not use twisted, warped, bowed or otherwise damaged or defective wood.

2.2.5 Cabinet Hardware and Accessory Materials:

2.2.5.1 General: Provide cabinet hardware and accessory materials associated with architectural cabinets, except for items which are specified in Division-8 section "Finish Hardware". Cabinet hardware shall not be a part of finish hardware schedule or allowance and shall be included in base bid.

2.2.5.2 Cabinet Hardware: ANSI A156.9. Provide hardware for each door/drawer. All drawers shall be within 2" of the back of cabinet.

2.2.5.2.1 Door Hinge: SS Rockford Process Control hinges, 851 overlay brushed stainless steel. Provide manufacturer's recommendation for correct number of hinges per door size.

2.2.5.2.2 Cabinet Door/Drawer Pull: Manufacturer: *Hafele*, Size: 106x35x96, Product: Stainless Steel, Finish: Matt Stainless Steel #115.61.601

2.2.5.2.3 Drawer Slide: (Medium Duty for draws up to 18" wide x 6" tall): Manufacturer: *Accuride*, Product: 3832EC: (14"-28" slide length) Box/File Drawer – Full Extension, self-closing. Load rating: 100 lbs., Finish: Zinc

2.2.5.2.4 Drawer Slide: (Heavy Duty for draws up to 42" wide): Manufacturer: *Accuride*, Product: 3640: (12"-28" slide length) Lateral File – 1" overtravel. Load Rating: 200 Lbs., Finish: Zinc

2.2.5.2.5 Cabinet Door/Drawer Lockset and Accessories: Manufacturer: *Hafele*, Product: Deadbolt Lock-FH Series with Cylinder Rosettes and Mortise Lock Case, Finish: Matt Nickel-Plated.

2.2.5.2.6 Cable Counter Top Grommets: Manufacturer: *Hafele*, Product: Metal Grommets, Size: 63mm (2/1/2"), Finish: Matt Nickel #429.94.448

2.2.5.2.7 Shelf Supports for drilled holes: Manufacturer: *Knape & Vogt*, Product: #346 (add #129RUB for glass shelves), Finish: Anochrome

2.2.5.2.8 Utility Shelf Standards: Manufacturer: *Knape & Vogt*, Product: #87, Finish: Anochrome

2.2.5.2.9 Utility Shelf Brackets: Manufacturer: *Knape & Vogt*, Product: 186/187 Brackets: 186 brackets are 12-gauge x 4 5/16" high; used for shelf depths of 8" and 10". #187 Brackets are 12-gauge x 5 1/16" high; used for shelf depths of 12", 14", 16" and 18"; 12-gauge x 6 ½" high for shelf depths of 20", 22" and 24". Include #210 ANO End Rest and #211ANO Center Rest, Finish: Anochrome

2.2.5.2.10 Provide felt or rubber door bumpers on top and bottom of back side of cabinet doors

2.2.6 Architectural Cabinet Tops Finish:

2.2.6.1 Quality Standard: Comply with applicable AWS Sections.

2.2.6.2 Type of Top: High Pressure Decorative Laminate, solid surface quartz, and Wood Countertops with Stainless Steel cladding finish, Splashes and Wall Paneling :

Grade: Premium

Laminate Cladding for Horizontal Surface: High pressure decorative laminate complying with NEMA LD 3 and Stainless Steel as follows:

Colors, Patterns, and Finishes: Match the Resident Engineer/ Architect's sample.

Grade: GP-50 (0.050" minimum nominal thickness) laminate and 14 gage stainless steel.

Edge Treatment: Same as laminate or stainless steel cladding on horizontal surface with a no drip square edge as detailed.

2.2.6.3 Type of Top: See separate Section 06 61 18 for Solid Surface Quartz as noted in Finish Schedule.

2.2.7 Closet and Utility/Storage Rooms "Non-Finished" Shelving:

2.2.7.1 Quality Standard: Comply with AWS Section.

2.2.7.2 Shelving for Clear Sealed or Opaque Finish: Comply with the following requirements:

Grade: Premium.

Shelving Material: 3/4" Exterior Grade Plywood.

2.2.8 Architectural Cabinets:

2.2.8.1 Quality Standard: Comply with AWS Section.

2.2.8.2 Cabinets: Comply with the following requirements:

Grade: Premium

Type of Cabinet Construction: Flush overlay. Type II construction in such sections as access openings will permit.

Drawer Boxes: Baltic Birch plywood sides and hardwood plywood bottoms.

Exposed and Semi-Exposed Material (including toe space): Material and finish per Finish Schedule and details in the drawings. Plastic Laminate per AWS Premium Grade.

Doors and Drawer Front: Door and drawer front shall be Flush Overlay, slab frameless.

Cabinet Finish: Unless otherwise noted in Finish Schedule stain, paint, or plastic laminate color to be selected by the Resident Engineer and Architect. See Section 09 06 00 for type.

Enclosed Cabinet Shelving: Shall be 3/4" plywood with plastic laminate finish.

2.2.8.3 Countertop Steel Wall Brackets: Provide steel brackets as intermediate counter supports every 32” at counter top spans. Provide blocking as required. Wall bracket manufacturer: *Hafele*, Product: Hebgo Bracket #287.45.468 Size: 480x180x80mm (for 24” deep counter), Load Capacity: 1,100lbs per pair; Hebgo Bracket #287.45.486 Size: 680x220x100mm (for 30” deep counter), Load Capacity: 1,100lbs per pair. Paint per the Resident Engineer and the architect.

2.3 FABRICATION:

2.3.1 General

2.3.1.1 Wood Moisture Content: Comply with requirements of referenced quality standard for moisture content of lumber at time of fabrication and for relative humidity conditions in the installation areas.

2.3.1.2 Complete fabrication, assembly, finishing, hardware application, and other work before shipment to project site to maximum extent possible. Disassemble components only as necessary for shipment and installation.

Where necessary for fitting at site, provide ample allowance for scribing, trimming, and fitting.

2.3.1.3 Pre-Cut Openings: Fabricate cabinets and countertops with pre-cut openings, where possible, to receive hardware, appliances, plumbing fixtures, electrical work and similar items. Locate openings accurately and use templates or roughing-in diagrams for proper size and shape. Smooth edges of cutoffs and, where located in countertops and similar exposures seal edges of cutouts with a water-resistant coating.

2.3.1.4 Measurements: Before proceeding with fabrication of woodwork required to be fitted to other construction, obtain field measurements and verify dimensions and shop drawing details as required for accurate fit. Where sequence of measuring substrates before fabrication would delay the project, proceed with fabrication (without field measurements) and provide ample borders and edges to all for subsequent scribing and trimming of woodwork for accurate fit.

PART 3 - EXECUTION

3.1 PREPARATION:

3.1.1 Condition woodwork to average prevailing humidity conditions in installation areas prior to installing.

3.1.2 Backprime lumber for painted finish exposed on the exterior or, where indicated, to moisture and high relative humidities on the interior. Comply with requirements of section on painting within Division 9 for primers and their application.

3.2 INSTALLATION OF MILLWORK:

3.2.1 Discard units of material which are unsound, warped, bowed, twisted, improperly treated, not adequately seasoned or too small to fabricate work with minimum of joints or optimum jointing arrangements, or which are of defective manufacture with respect to surfaces, sizes or patterns.

3.2.2 Install the work plumb, level, true and straight with no distortions. Shim as required using concealed shims. Install to a tolerance of 1/8" in 8'-0" for plumb and level and with no variations in flushness of adjoining surfaces.

3.2.3 Scribe and cut work to fit adjoining work, and refinish cut surfaces or repair damaged finish at cuts.

3.2.4 Standing and Running Trim: Install with minimum number of joints possible, using full-length pieces (from maximum length of lumber available) to the greatest extent possible. Joints less than 12 feet apart will not be permitted in straight runs in trim members or moldings. Stagger joints in adjacent and related members. Cope inside corners, miter at outside corners, back miter open ends to produce tight fitting joints with full surface contact throughout length of joint. Use scarf joints for running joints.

3.2.5 Anchor finish carpentry work to anchorage devices or blocking built-in or directly attached to substrates. Secure to grounds, stripping and blocking with countersunk, concealed fasteners and blind nailing as required for a complete installation. Use fine finishing nail for exposed nailings, countersunk and filled flush with wood filler putty to finished surface. Carpentry work to be finished with clear or stain (transparent), counter sink all screw heads and cover with neatly filled wood plugs to match the grain.

3.3 INSTALLATION OF CABINETS AND COUNTERTOPS:

3.3.1 Install cabinets and countertop plumb, level, true and straight with no distortions. Shim as required using concealed shims. Install to a tolerance of 1/8" in 8'-0" for plumb and level (including tops); and with no variations in flushness of adjoining surfaces.

3.3.2 Scribe and cut work to fit adjoining work, and refinish cut surfaces or repair damaged finish at cuts.

3.3.3 Anchor cabinets and countertops to anchor or blocking built-in or directly attached to substrates. Secure to grounds, stripping and blocking as required for a complete installation. Install cabinets without distortion so that doors and drawers fit openings properly and are accurately aligned. Adjust hardware to center doors and drawers in openings and to provide unencumbered operation. Complete the installation of hardware and accessory items as indicated. Anchor countertop securely to base units and other support systems as indicated.

3.4 ADJUSTMENT, CLEANING, FINISHING AND PROTECTIONS:

3.4.1 Repair damaged and defective woodwork where possible to eliminate defects functionally and visually; where not possible to repair, replace woodwork. Adjust joinery for uniform appearance.

3.4.2 Clean, lubricate and adjust hardware.

3.4.3 Clean woodwork on exposed and semi-exposed surfaces. Touch-up shop-applied finishes to restore damaged or soiled areas.

3.4.4 See Section 09 91 00 "Painting" for final finishing of installed woodwork.

3.4.5 Provide final protection and maintain conditions, in a manner acceptable to Fabricator and Installer, which ensures that there would be no damage or deterioration at the time of Substantial Completion to all woodwork.

END OF SECTION 06 20 00

SECTION 06 61 18 – SOLID SURFACE QUARTZ COUNTERTOPS

PART 1. GENERAL

1.1 SUMMARY

A. Section Includes:

1. Quartz counter tops.
2. Quartz .
3. Setting materials and accessories.

B. Related Sections:

1. Division 01: Administrative, procedural, and temporary work requirements.
2. Section - Steel supports.
3. Section - Wood supports.
4 Section - Cementitious backer unit substrate.
5. Section - Base cabinets.
6. Section - Joint sealers.
7. Section - Toilet Accessories.

1.2 REFERENCES

A. American National Standards Institute (ANSI):

1. A108.5 - Installation of Ceramic Tile with Dry-Set Portland Cement Mortar or Latex Portland Cement Mortar.
2. A118.4 - Latex-Portland Cement Mortar.

B. ASTM International (ASTM):

1. C97 - Standard Test Methods for Absorption and Bulk Specific Gravity of Dimension Stone.
2. C99 - Standard Test Method for Modulus of Rupture of Dimension Stone.
3. C170 - Standard Test Method for Compressive Strength of Dimension Stone.
4. C241 - Standard Test Method for Abrasion Resistance of Stone Subjected to Foot Traffic.
5. C256 - Method of Test for Flexural Strength of Magnesium Oxychloride Cements (Using Simple Bar with Two-Point or Single-Point Loading).
6. C370 - Standard Test Methods for Moisture Expansion of Fired Whiteware Products.

7. C373 - Standard Test Method for Water Absorption, Bulk Density, Apparent Porosity, and Apparent Specific Gravity of Fired Whiteware Products.
8. C482 - Standard Test Method for Bond Strength of Ceramic Tile to Portland Cement.
9. C484 - Standard Test Method for Thermal Shock Resistance of Glazed Ceramic Tile.
10. C531 - Standard Test Method for Linear Shrinkage and Coefficient of Thermal Expansion of Chemical-Resistant Mortars, Grouts, Monolithic Surfacings and Polymer Concretes.
11. C648 - Standard Test Method for Breaking Strength of Ceramic Tile.
12. C650 - Standard Test Method for Resistance of Ceramic Tile to Chemical Substances.
13. C672/C672M - Standard Test Method for Scaling Resistance of Concrete Surfaces Exposed to Deicing Chemicals.
14. C674 - Standard Test Methods for Flexural Properties of Ceramic Whiteware Materials.
15. C880 - Standard Test Method for Flexural Strength of Dimension Stone.
16. C1026 - Standard Test Method for Measuring the Resistance of Ceramic Tile to Freeze-Thaw Cycling.
17. C1028 - Standard Test Method for Determining the Static Coefficient of Friction Of Ceramic Tile and Other Like Surfaces by the Horizontal Dynamometer Pull-Meter Method.
18. C1353 - Standard Test Method Using the Taber Abraser for Abrasion Resistance of Dimension Stone Subjected to Foot Traffic.
19. C1378 - Standard Test Method for Determination of Resistance to Staining.
20. E84 - Standard Test Method for Surface Burning Characteristics of Building Materials.

C. Greenguard Environmental Institute (GEI) - Certification Programs.

D. NSF International/American National Standards Institute (NSF/ANSI) 51 - Food Equipment Materials.

E. Underwriters Laboratories, Inc. (UL) 94 - Standard for Safety of Flammability of Plastic Materials for Parts in Devices and Appliances Testing.

1.3 SUBMITTALS

A. Submittals for Review:

1. Shop Drawings: Include layout, dimensions, materials, finishes, cutouts, and attachments.

B. Samples:

1. 3 x 3 x inch quartz samples in specified color.
2. 3 inch long joint sealer samples showing available colors.

C. Sustainable Design Submittals:

1. Recycled Content: Certify percentages of post-consumer and pre-consumer recycled content.
2. Low-Emitting Materials: Certify volatile organic compound (VOC) content.

D. Closeout Submittals:

1. Maintenance Data: Include recommended cleaning materials and procedures, and list of materials detrimental to quartz.

1.4 QUALITY ASSURANCE

A. Manufacturer Qualifications:

1. Minimum 10 years documented experience in manufacture of quartz surfacing materials.
2. Current USGBC Environmental Management System Certificate holder.

B. Fabricator and Installer Qualifications: Minimum 2 years documented experience in work of this Section.

C. Mockup:

1. Construct countertop mockup, full depth, with splash.
2. Locate where directed.
3. Approved mockup may remain as part of the Work if approved by the Resident Engineer and the Architect.

1.5 WARRANTY

A. Provide manufacturer's 10 year warranty against defects in materials and workmanship.

PART 2. PRODUCTS

2.1 MANUFACTURERS

A. Contract Documents are based on products by Cosentino USA, Inc. (www.cosentinousa.com)

B. Substitutions: Under provisions of Division 01.

2.2 MATERIALS

A. Quartz Sheet:

1. Product: Silestone Quartz or approved equal.
2. Composition: Quartz aggregate, polyester resin, and color pigments formed intoflat slabs.
3. Bacteriostatic Protection. With Silver Technology.
4. Color: See section 09 06 00
5. Surface finish: See section 09 06 00
6. Thickness: [1/2] [3/4] [1-1/4] inch[es].
7. Physical characteristics:
   a. Static coefficient of friction: 0.75 dry, 0.68 wet, tested to ASTM C1028.
   b. Water absorption: 0.03 percent, tested to ASTM C97.
   c. Compressive strength: 29,100 psi, tested to ASTM C170.
   d. Bond strength: 235 psi, tested to ASTM C482.
   e. Modulus of rupture: 6310 psi, tested to ASTM C99.
   f. Flexural strength: 5840 psi, tested to ASTM C880.
   g. Breaking strength: 480 lbf, tested to ASTM C648.
   h. Impact strength: Minus 352 feet, tested to ASTM C256.
   i. Density: 2.47 grams per cubic centimeter, tested to ASTM C373.
   j. Stain resistance: Not affected by 10 percent hydrochloric acid or 10 percent KOH, tested to ASTM C650.
   k. Thermal shock resistance: Pass 5 cycles, tested to ASTM C484.
   l. Abrasive index: 65-Ha = 25, tested to ASTM C241.
   m. Thermal expansion: 1.670 x 10-5 in/in/deg F, tested to ASTM C531.
   n. Deicing resistance: Rating of 0, tested to ASTM C672/C672M.
   o. Freeze/thaw resistance: 0 tiles at 15 cycles, tested to ASTM C1026.
   p. Flame spread rating: Class 1, tested to ASTM E84.
   q. Flammability: Best rating, tested to UL 94.
8. Certifications:
   a. GEI indoor Air Quality Certified.
   b. GEI Children and Schools Certified.
   c. NSF/ANSI 51 Certified.
   d. Kosher Certified.

2.3 ACCESSORIES

A. Adhesive:

1. Type recommended by quartz manufacturer.
2. Maximum volatile organic compound (VOC) content: 70 grams per liter.
3. Joint Sealer:
   a. .Latisil Tile and Stone Sealant by Laticrete International, Inc.

b. Volatile organic compound (VOC) content: Maximum [50] . grams per liter.
c. Color: . [To be selected from manufacturer's full color range.]

2.4 FABRICATION

A. Cut quartz panels accurately to required shapes and dimensions.

B. Fabricate exposed edges - laminated eased profile.

C. Fabricate with hairline joints.

D. Cut holes for sinks, faucets and toilet accessories as required.

PART 3 EXECUTION

3.1 PREPARATION

A. Clean surfaces to receive fabrications; remove loose and foreign matter than could interfere with adhesion.

3.2 INSTALLATION

A. Install fabrications in accordance with manufacturer's instructions and approved Shop Drawings.

B. Adhere fabrications with continuous beads of adhesive.

C. Set plumb and level. Align adjacent pieces in same plane.

D. Install with hairline joints.

E. Fill joints between fabrications and adjacent construction with joint sealer; finish smooth and flush.

3.3 INSTALLATION TOLERANCES

A. Maximum variation from level and plumb: 1/8 inch in 10 feet, noncumulative.

B. Maximum variation in plane between adjacent pieces at joint: Plus or minus 1/16 inch.

3.4 CLEANING

A. Clean fabrications in accordance with manufacturer's instructions.

3.5 PROTECTION

A. Protect installed fabrications with nonstaining sheet coverings.

END OF SECTION 06 61 18

SECTION 06 64 00 - TRANSLUCENT RESIN PANEL SYSTEM

PART 1 – GENERAL

1.1 RELATED DOCUMENTS:

A. Drawings and general provisions of the Contract, including General and Supplementary Conditions and other Division 1 Specification sections, apply to this Section.

1.2 SUMMARY:

A. This Section includes the Plastic Fabrication as shown and specified in the described system(s):

Adjust list below to suit Project
Glazing panels in the Aluminum Storefront System.

B. Related Sections include the following:

SECTION 08 81 00 GLAZING

1.3 SUBMITTALS:

A. General: Submit the following in accordance with conditions of contact and Division 1 specification SECTION 01 33 00 "SUBMITTAL PROCEDURES".

B. Product Data: Submit manufacturer's product data; include product description, fabrication information, and compliance with specified performance requirements.

C. Submit product test reports from a qualified independent 3rd party testing agency indicating each type and class of panel system complies with the project performance requirements, based on comprehensive testing of current products. Previously completed test reports will be acceptable if for current manufacturer and indicative of products used on this project.

Test reports required are:

Rate of Burning (ASTM D 635)
Self-Ignition Temperature (ASTM D 1929)
Density of Smoke (ASTM D 2843)
Flame spread and Smoke developed testing (ASTM E 84)
Room Corner Burn Test (NFPA 286)
Extent of Burning (UL 94)
Impact strength (ASTM D 3763)
Safety glazing impact resistance (ANSI Z97.1-2004)
UPITT Test for Combustion Product Toxicity
Dynamic environmental testing (ASTM standards D 5116 and D 6670)

D. Shop Drawings: Include plans, elevations, sections, panel dimensions, details, and attachments to other work.

E. Samples for Verification:

Submit minimum 4-inch by 4-inch sample for each type, texture, pattern and color of solid plastic fabrication.

F. Mockups:

Build mockups to verify selections made under sample Submittals and to demonstrate aesthetic effects.
Build mockup of Glazing Plastic Fabrication.

Approved mockups may become part of the completed Work if undisturbed at time of Substantial Completion and with the approval of the Resident Engineer and the Architect.

G. Maintenance Data: Submit manufacturer's care and maintenance data, including care, repair and cleaning instructions. Include in Project closeout documents.

1.4 QUALITY ASSURANCE:

A. Manufacturers Qualifications:

Materials and systems shall be manufactured by a company continuously and regularly employed in the manufacture of specified materials for a period of at least five (5) consecutive years and which can show evidence of those materials being satisfactorily used on at least six (6) projects of similar size, scope and location. At least three (3) of the projects shall have been successful for use five (5) years or longer.

Manufactured panels must be produced from a minimum of 40% post-industrial recycle content. This recycle content must be certified by a recognized 3rd party certification group, such as Scientific Certification Systems (SCS).

Manufacturer must offer a documented reclaim process that will take back, at the manufacturers cost, panels that are at their end-of life cycle.

1.5 DELIVERY, STORAGE, AND HANDLING:

A. Deliver Plastic Fabrications, systems and specified items in manufacturer's standard protective packaging.

B. Do not deliver Plastic Fabrications, system, components and accessories to Project site until areas are ready for installation.

C. Store materials in a flat orientation in a dry place that is not exposed to exterior elements.

D. Handle materials to prevent damage to finished surfaces. Provide protective coverings to prevent damage or staining following installation for duration of project.

E. Before installing Plastic Fabrications, permit them to reach room temperature.

1.6 PROJECT CONDITIONS:

A. Environmental Limitations: Do not install Solid Polymer Fabrications until spaces are enclosed and weatherproof, and ambient temperatures and humidity conditions are maintained at the levels indicated for Project when occupied for its intended use.

1.7 Warranty:

A. Manufacturer's Special Warranty on Plastic Fabrications: Manufacturer's standard form agreeing to repair or replace units that fail in material or workmanship within the specified warranty period.

B. Warranty Period: 1 year after the date of substantial completion.

C. The warranty shall not deprive the owner of other rights or remedies the Owner may have under other provisions of the Contract Documents, and is in addition to and runs concurrent with other warranties made by the Contractor under the requirements of the Contract Documents.

PART 2 - PRODUCTS

2.1 MANUFACTURER:

A. Manufacturer: 3form, Inc., Salt Lake City, Utah, USA / telephone 801-649-2500

2.2 Materials

A. Exterior: 1/2" koda XT, Color: Cranberry, Front Finish: Patent, Back Finish: Stucco.

Engineered polyester resin **UV Protection for Exterior Installation**
Sheet Size: Maximum 4' x 10'
Thickness: Minimum per spec above
Basis of Design Product: The design of Plastic Fabrications is based on products as provided by 3form, Inc. Products from other manufacturers must be approved by the Resident Engineer, the Architect or Designer prior to bidding in accordance with the Instructions to Bidders.

B. Interlayer Materials: Compatible with polyesters and bonding process to create a monolithic sheet of material when complete.

C. Sheet minimum performance attributes:

Rate of Burning (ASTM D 635). Material must attain CC1 Rating for a nominal thickness of 1.5 mm (0.060 in.) and greater.
Self-Ignition Temperature (ASTM D 1929). Material must have a Self-ignition temperature greater than 650°F.

Density of Smoke (ASTM D 2843). Material must have a smoke density less than 75%.
Flame spread and Smoke developed testing (ASTM E 84). Material must be able to meet a level of Class A (Flame spread less than 25 and smoke less than 450) at thickness of 1".
Room Corner Burn Test (NFPA 286). Material must meet Class A criteria at ¼" thickness as described by the **"California Building Code, current edition (CBC)"**.
Extent of Burning (UL 94). Must submit UL card.
Impact strength. Minimum impact strength test as measured by ASTM D 3763 of 20 ft. lbs. (for durability, shipping, installation, and use).
Safety Glazing. Material must attain a Class A impact rating in accordance with ANSI Z97.1-2004 at 1/8" thickness.
UPITT Test for Combustion Product Toxicity: Product must be recorded as "not more toxic than wood".
Dynamic environmental testing (ASTM standards D 5116 and D 6670). Panels must not have detectable VOC off-gassing agents and must be have Greenguard™ Indoor Air Quality certified.
Panels must be produced from a minimum of 40% post-industrial recycle content. This recycle content must be certified by a recognized 3rd party certification group, such as Scientific Certification Systems (SCS).

2.3 FABRICATION:

A. General: Fabricate Plastic Fabrications to designs, sizes and thicknesses indicated and to comply with indicated standards. Sizes, profiles and other characteristics are indicated on the drawings.

B. Comply with manufacturer's written recommendations for fabrication.

C. Machining: Acceptable means of machining are listed below. Ensure that material is not chipped or warped by machining operations.

Sawing: Select equipment and blades suitable for type of cut required.
Drilling: Drills specifically designed for use with plastic products.
Milling: Climb cut where possible.
Routing
Tapping

D. Forming: Form products to shapes indicated using the appropriate method listed below. Comply with manufacturer's written instructions.

Cold Bending
Hot Bending
Thermoforming: Acceptable only on uncoated material.
Drape Forming
Matched Mold Forming
Mechanical Forming

E. Laminating: Laminate to substrates indicated using adhesives and techniques recommended by manufacturer.

2.4 MISCELLANEOUS MATERIALS:

A. General: Provide products of material, size, and shape required for application indicated, and with a proven record of compatibility with surfaces contacted in installation.

B. Cleaner: Type recommended by manufacturer.

C. Fasteners: Use screws designed specifically for plastics. Self-threading screws are acceptable for permanent installations. Provide threaded metal inserts for applications requiring frequent disassembly such as light fixtures.

D. Bonding Cements: May be achieved with solvents or adhesives, suitable for use with product and application.

PART 3 - EXECUTION

3.1 EXAMINATION:

A. Examine substrates, areas, and conditions where installation of Plastic Fabrications will occur, with Installer present, for compliance with manufacturer's requirements. Verify that substrates and conditions are satisfactory for installation and comply with requirements specified.

3.2 INSTALLATION:

A. General: Comply with manufacturer's written instructions for the installation of Plastic Fabrications.

B. Manufacturer's shop to fabricate items to the greatest degree possible.

C. Utilize fasteners, adhesives and bonding agents recommended by manufacturer for type of installation indicated. Material that is chipped, warped, hazed or discolored as a result of installation or fabrication methods will be rejected.

D. Install components plumb, level and rigid, scribed to adjacent finishes, in accordance with approved shop drawings and product data.

E. Form field joints using manufacturer's recommended procedures. Locate seams in panels so that they are not directly in line with seams in substrates.

3.3 CLEANING AND PROTECTION:

A. Protect surfaces from damage until date of substantial completion. Repair work or replace damaged work, which cannot be repaired to the Resident Engineer and the Architect's satisfaction.

END OF SECTION 06 64 00

SECTION 07 11 00 - WATERPROOFING/DAMPPROOFING

PART 1 - GENERAL

1.1 RELATED DOCUMENTS & DESCRIPTION OF WORK:

The work includes labor and materials required for the completion of waterproofing work, including but not limited to concrete water repellants and waterproof membrane system with protection barrier on below grade vertical surfaces as shown on drawings and as specified. The Conditions of the Contract and Division 1 apply to this section as fully as if repeated herein.

1.2 REFERENCES:

The editions of the American Society for Testing and Materials (ASTM) Standards referenced herein apply to the work only to the extent specified by the references thereto.

1.3 QUALITY ASSURANCE:

1.3.1 Applicator shall be properly trained and approved by manufacturer. Applicator shall have a minimum of five years experience with specified waterproofing system.

1.3.2 The waterproofing materials shall be from a single manufacturer to the maximum extent possible, and who have successfully specialized in this particular field of waterproofing for a period of at least 10 years immediately prior to this contract.

1.3.3 Pre-Installation Meeting:

1.3.3.1 Prior to commencing the work of this section, the contractor shall schedule and attend a meeting at the job site to discuss conformance with requirements of the Contract Documents. Request attendance of representatives from the Resident Engineer and the Architect, Contractor, subcontractors (applicable if flashing, sealant and expansion joint contractor are contracted separately from the waterproofing contract), and other parties who are involved.

1.3.4 Post-Installation Meeting:

1.3.4.1 After installation of the work of this section and prior to backfill, the contractor shall schedule and attend a job walk/meeting with the waterproofing system manufacturer's representative at the job site to review installation conformance with requirements of the Contract Documents and provide water flow test showing system connections, water flow, and end point tie-in connection to storm drain system. Request attendance of representatives from the Resident Engineer, Architect, Contractor, and waterproofing subcontractors. (and other parties who are involved.)

1.4 SUBMITTALS:

1.4.1 Product Data: Submit certificates of compliance, manufacturer's specifications, installation instructions, and general recommendations for each waterproofing material required.

1.4.2 Applicator shall provide letter certifying that work has been installed in accordance with specifications and manufacturers written instructions.

1.4.3 Submittal procedures and quantities are specified in Section 01 33 00.

1.5 DELIVERY, STORAGE AND HANDLING:

1.5.1 Deliver materials to the site in their original unbroken containers or packages bearing the manufacturer's name, brand designation, date of manufacture and shelf life.

1.5.2 Store materials at the site in a dry location, raised above the ground and protected from physical damage, moisture and temperatures below 35 degrees F or above 80 degrees F. Do not store materials past their shelf life. Do not store materials near sparks or flame.

1.6 PROJECT CONDITIONS:

1.6.1 Concrete shall have cured for at least 7 days and masonry grout and mortar shall have cured for at least 2 days prior to application of membrane. Block wall joints to be unexposed to view shall be struck flush.

1.6.2 Do not install the membrane during wet, damp or foggy weather or when the surface temperature is below 25 degrees or above 120 degrees F.

1.6.3 Contractor shall condition all surfaces as called for in manufacturers literature.

1.7 GUARANTEE:

In addition to the warranty and correction of work requirements of the General Conditions, work under this section shall be guaranteed watertight for a period of **ten years from date of "Substantial Completion".** This guarantee shall include ruptures caused by cracking of the substrate up to l/l6" in width. Written warranty shall include all materials and labor required to repair leaks that develop and make good any damage to other work caused by such leaks or the repair thereof.

PART 2 - PRODUCTS

2.1 MANUFACTURER:

2.1.1 Use basic products of one manufacturer throughout each system. Materials which are not available from the basic manufacturer shall be approved by him prior to purchasing and installation. In all cases, materials and application shall be in accordance with the requirements of this specification and manufacturers written literature. All materials shall conform with current VOC requirements. No primers,

solvent or materials containing 1.1.1 Trichloroethane will be allowed.

2.1.2 Waterproofing: Membrane at interior face (below planter grade) of site vertical planter retaining walls be as follows:

2.1.2.1 Shall be Jiffy Seal 140/60 waterproof membrane as manufactured by Protecto Wrap Co., Denver, CO 80223.

2.1.2.2 Primer, solvent and sealants shall be as furnished or recommended by the waterproof coating manufacturer.

2.1.2.3 Sealant at Wall to Footing foundation shall be "SM-7100" as manufactured by Schnee-Morehead.

2.1.2.4 Drainage and Protection Composite: J-Drain 302 prefabricated drainage composite system as manufactured by JDR Enterprises, Inc., (1800.843.7569).

2.1.2.5 Perimeter drainage system shall be Model #SWD-6 drainage composite system as manufactured by JDR Enterprises, Inc., (1800.843.7569).

2.1.4 Waterproofing membrane below finish material: Shall be ICE and Water Guard or BT-20 as manufactured by Protecto Wrap Co. or approved equal at window surrounds or prior approved equal as shown on drawings.

2.1.5 A. Waterproofing coating for horizontal ceilings/roof parapets & vertical planes/walls above grade interior and exterior exposed building concrete or site concrete, masonry block, and/or concrete panel veneers: Shall be clear penetrating sealant and graffiti control – Protectosil Aqua-trete Concentrate (interior and exterior) and Protectosil Antigraffiti (at exterior only) as manufactured by Evonik Industries or approved equal. See Section 07 19 00.

B. Waterproofing coating/sealer for horizontal floors at interior exposed building concrete: Shall be the following acrylic resin compound - Hydrozo 100, or approved equal. See Section 03 30 00.

2.1.6 Waterproofing at Tile Walls: See tile section 09 30 00 of these specifications. All waterproofing membranes to be per tile manufacturer recommendations.

PART 3 - EXECUTION

3.1 INSPECTION:

Inspect surfaces to receive membrane waterproofing prior to start of work to ensure that they are free of sharp projections, depressions, cracks, holes or other physical defects. Test surface to ensure that there are no curing compounds or form release agents that would adversely affect bonding of the waterproofing and dampproofing. Do not start work until deficiencies have been corrected. Start of work of this section constitutes acceptance of the surfaces.

3.2 PROTECTION:

3.2.1 Provide workmen with manufacturer's material safety data sheets and with masks and protective clothing as recommended by the waterproofing manufacturer to protect against health hazards.

3.2.2 Do not permit fires, spark producing equipment or smoking within the application area.

3.2.3 Protect adjacent surfaces not indicated to be waterproofed or damp proofed from overspray, splash or spillage by use of drop clothes and masking as necessary.

3.2.4 When applying waterproofing in enclosed spaces, it shall be the Contractor's responsibility to provide adequate ventilation to prevent accumulation of hazardous fumes for all types of waterproofing products not necessarily specified in this project.

3.2.4 Install J-Drain SWD-6 drainage composite at perforated pipe locations over surfaces against which backfill will be placed. In exposed areas, protect finished membrane against damage until backfill is placed. Place backfill carefully so as to prevent rupture, damage, or displacement of protection board or membrane.

3.3 PREPARATION:

3.3.1 Cleaning: Remove oil, grease, curing compound and other materials that would adversely affect the bond of waterproofing material. Sweep surfaces free of dirt and debris.

3.3.2 Cracks and Cold Joints: Treat cracks and cold joints as recommended by waterproofing and dampproofing membrane manufacturers.

3.3.3 Expansion and Control Joints: Clean, prime, install backer rod and seal joints using approved sealant. Place a bond breaker over sealant to prevent waterproofing material from bonding to sealant. Apply waterproofing membrane as recommended by waterproofing manufacturer.

3.3.4 Surface Conditioner: Apply conditioner to surfaces to receive waterproofing material, except where the material manufacturer specifically states that conditioner is not required for that surface. Surface conditioner utilized shall be from same manufacturer as adjacent product installed.

3.4 APPLICATION: All products shall be installed per manufacturers' written literature and recommendations.

3.4.1 Waterproofing Membrane (General per 2.1.2): As per manufacturers written instructions prepare and clean surface to be waterproofed. **Note: terminate Jiffy Seal 140/60 membrane at grade level with 1 1/2" copper termination flashing.**

3.4.2 A. Waterproofing coating (clear sealant per 2.1.5A): Shall be applied in strict conformance with manufacturers written instructions.

B. Waterproofing coating (clear sealant per 2.1.5B): Shall be applied in strict conformance with manufacturers written instructions.

3.5 FIELD QUALITY CONTROL:

3.5.1 Inspection: Immediately prior to application of protection board or drainage composite, inspect the membrane for punctures or other breaks in the membrane.

3.5.2 Patching: Patch punctures and other breaks in the membrane revealed by inspection as recommended by manufacturer.

3.6 CLEAN UP:

Clean adjacent surfaces of over sprayed, splashed or spilled material. Remove containers and equipment from the site.

END OF SECTION 07 11 00

SECTION 07 19 00 - WATER REPELLENT AND ANTI-GRAFFITI SYSTEM

PART 1 - GENERAL

1.01 SUMMARY

A. Section Includes:

1. Interior and Exterior water repellent and anti-graffiti coating system for:

a. Concrete Ceiling and Wall Panels and Concrete Unit Masonry.

b. Extended written warranty.

B. Related Items:

1. Admixture for concrete block units: Refer to Section 04 22 00

1.02 SUBMITTALS

A. Comply with Section 01 33 00, unless otherwise indicated. Substitution requests must be submitted 14 days prior o bid date.

B. Product Data: Manufacturer's specifications and technical data including the following:

1. Detailed specification of construction and fabrication.

2. Manufacturer's installation instructions.

3. Certified test reports indicating compliance with performance requirements specified herein.

C. Quality Control Submittals:

1. Statement of qualifications.

2. Statement of compliance with Regulatory Requirements.

3. Field Quality Control Submittals as specified in Part 3.

4. Manufacturer's field reports.

1.03 QUALITY ASSURANCE

A. Manufacturer's Qualification: Not less than 10 years experience in the actual production of specified products.

B. Installer's Qualifications: Firm experienced in installation or application of systems similar in complexity to those required for this Project, plus the following:

1. Approved or licensed by manufacturer. Provide written verification by Manufacturer

2. Not less than 5 years experience with systems.

3. Successfully completed not less than 5 comparable scale projects using this system.

C. Product Qualifications, Water Repellent:

1. Comply with the provisions of the following standards for concrete and concrete masonry.

a. No change in surface texture, no blotchy appearance

b. ASTM E514 “Water Permeance of Masonry”

99.4% reduction in leakage rate over the control wall

Control wall must have a leakage rate of at least 6.0 liters/hours

c. ASTM C140 “Concrete Masonry Units” 24 hour water soak

89% reduction in water absorption

Control should absorb at least 5% water

d. Penetration - 0.25 inches average

D. Product Qualifications, Anti-Graffiti:

1. The anti-graffiti coating shall meet the following requirements.

a. Active Content: Organofluorosilane.

b. Solvent: None, water-borne.

c. VOC Content: No VOC’s. 0 grams per liter.

d. Cleaning Cycles: Non-sacrificial: minimum of 10 cleaning cycles without reapplication.

e. Breathability: Greater than 95% water vapor transmission.

f. Surface Appearance: No appreciable difference compared to non-coated surface.

g. Excellent Ultraviolet light stability.

E. Regulatory Requirements: Products shall comply with State and local regulations concerning AIM (Architectural, Industrial and Maintenance) coatings regarding Volatile Organic Content (VOC).

1. The use of 1,1,1 trichloroethane shall not be allowed.

1.04 DELIVERY STORAGE AND HANDLING

A. Packing and Shipping: Deliver products in original unopened packaging with legible manufacturer’s identification.

B. Storage and Protection: Comply with manufacturer's recommendations.

1.05 PROJECT CONDITIONS

A. Environmental Requirements:

1. Maintain ambient temperature above 20 degrees F during and 24 hours after installation.

2. Do not proceed with application on materials if ice or frost is covering the substrate.

3. Do not proceed with application if ambient temperature of surface exceeds 100 degree F.

4. Do not proceed with the application of materials in rainy conditions or if heavy rain is anticipated with 4 hours after application.

B. Sealer Coordination:

1. Verify compatibility with curing compounds, patching materials, repair mortar, paints, sealants, etc. to be used on masonry surfaces to ensure compatibility with the water repellent.

1.06 SPECIAL WARRANTIES

A. Manufacturer shall stand behind installed system for period of 10 years from Date of Substantial Completion against all the conditions indicated below. When notified in writing from Owner, Manufacturer shall, promptly and without inconvenience and cost to Owner correct said deficiencies.

1. Loss of water repellency:

a. Concrete and Concrete Masonry: 1.0 ml/20 minutes or greater (60 mph wind driven rain equivalent).

b. Anti-Graffiti: Non-sacrificial with a minimum of 10 cleaning cycles without re-application.

PART 2 - PRODUCTS

2.01 MATERIALS

A. Acceptable manufacturers and products for concrete and concrete masonry units:

1. Protectosil® AQUA-TRETE® Concentrate - Evonik Degussa A&S Division 1-800-825-0919, 310-770-0572

2. Protectosil Anti-Graffiti- Evonik Degussa A&S Division 1-800-825-0919, 619-294-8010

3. Or approved equal per Section 1.02 and 1.03. No exceptions.

PART 3 - EXECUTION

3.01 EXAMINATION

A. Verification of Conditions: Examine areas and conditions under which Work is to be performed and identify conditions that may be detrimental to proper or timely completion.

1. Do not proceed until unsatisfactory conditions have been corrected.

3.02 PREPARATION

A. Protection: Install coverings to protect adjacent surfaces.

B. Surface Preparation:

1. Verify joints found to be unsound, hollow, or otherwise defective, have been raked out to a depth of 1/2 inch and pointed with mortar.
2. Verify cracks that exceed 1/64 inch wide have been filled.
3. All repointing must be completed and allowed to cure.
4. Remove dirt, dust and materials that will interfere with the proper and effective application of the penetrating sealer. It is the responsibility of the Contractor to prepare the surfaces of the concrete as recommended by the Water Repellent Manufacturer and acceptable to the Engineer.
5. Sealants, patching materials, and expansion joints shall have been installed and approved by the Engineer.

3.03 FIELD QUALITY CONTROL

A. Spray Test: After water repellent has dried, spray coated surfaces with water.

1. After surfaces have adequately dried, recoat surfaces that show water absorption.

B. Manufacturer's Field Services:

1. Furnish written certification that surface preparation method and final condition has manufacturer's approval and comply with the warranty.
2. Test area: Furnish results of test area absorption on each type of substrate. Test results shall determine application rate.

C. Test Area:

1. Before a sealer application the following field evaluation will be done. The cost of the field testing will be the responsibility of the Water Repellent Manufacturer.

2. Prepare a three feet by three feet test area to be sprayed with the water repellent and anti-graffiti coating.

   The test area shall be chosen by the Owner. Apply the water repellent at a rate of 40 to 70 square feet/gallon to produce a 6 to 8 inch rundown below the spray pattern.

3. Apply 2 coats of the anti-graffiti system to ½ of the sample area at a rate of approximately 175 to 200 square feet/gallon

4. Allow five days for the sample to cure run a RILEM uptake test on the treated area.

5. Place one tube on the brick and one tube on a mortar joint. Owner must be present for the application of the water repellent and the test.

6. Acceptable minimum results are as stated in the warranty provisions. Coverage rate used to pass this test section must be used on entire project.

3.04 WATER REPELLENT APPLICATION

Apply to interior and exterior surfaces for horizontal ceilings/roof parapets & vertical planes/walls above grade interior and exterior exposed building concrete or site concrete, masonry block, and/or concrete panel veneers.

A. Product shall be applied as supplied by the manufacturer without dilution or alteration.

B. Apply with low-pressure (15 psi) airless spray equipment with a fan spray coarse nozzle, flooding the surface to obtain uniform coverage unless otherwise recommended by the manufacturer.

C. Apply at a rate of not less than 65 square foot/gallon unless the field tests (as outlined in Section 3.03) determine that a heavier rate of application is necessary to meet the performance requirements.

D. Apply at temperature and weather conditions recommended by the manufacturer or written in this specification.

E. Follow manufacturers' recommendations concerning protection of glass, metal and other non-porous substrates. Contractor will be responsible to clean all surfaces that are contaminated by the water repellent.

F. Follow manufacturer's recommendation concerning protection of plants, grass and other vegetation. Contractor will be responsible for replacing all plants, grass or vegetation damaged by the water repellent.

G. Apply water repellent by brush only at locations where overspray would affect adjacent materials and where not practicable for spray application.

3.05 ANTI-GRAFFITI APPLICATION

Apply to exterior surfaces for horizontal roof parapets & vertical planes/walls above grade exposed building concrete or site concrete, and/or concrete panel veneers. .

A. Product shall be applied as per manufacturer's application instructions and recommendations for this specific project determined by field testing requirements described in Section 3.03. Provide written copy of manufacturer's recommendations.

B. Apply at temperature and weather conditions recommended by the manufacture or written in this specification.

C. Minimum standard recommendation is to apply two coats of the anti-graffiti system at full strength (non-diluted).

D. Surface residue shall be brushed out thoroughly until they completely penetrate into the surface.

E. Protect treated areas from rain and other surface water for a period of not less than four hours after application.

F. Provide adequate ventilation and follow all safety regulations for the City, County and State.

3.06 CLEANING

A. While Work Progresses: Clean spillage and overspray from adjacent surfaces using materials and methods as recommended by water repellent manufacturer.

B. Remove protective coverings from adjacent surfaces when no longer needed.

3.07 COMPLETION

A. Work that does not conform to specified requirements shall be corrected and/or replaced as directed by the Owners Representative at contractor's expense without extension of time.

END OF SECTION 07 19 00

SECTION 07 21 16 - BUILDING INSULATION

PART 1 - GENERAL

1.1 RELATED DOCUMENTS AND DESCRIPTION OF WORK:

The work includes the furnishing and installing of thermal and sound insulation in the building as shown and noted on the drawings and specified herein. The Conditions of the Contract and Division 1 apply to this section as fully as if repeated herein.

1.2 SUBMITTALS:

1.2.1 Submit a list of insulation materials proposed for use, giving the manufacturer's names and brand designations for each material.

1.2.2 See Section 01 33 00 for number and manner of submittals.

1.3 QUALITY ASSURANCE:

1.3.1 Thermal Resistivity: Where thermal resistivity properties of insulation materials are designated by R-values they represent the rate of heat flow through a homogenous material exactly 1" thick, measured by test method included in referenced material standard or otherwise indicated. They are expressed by the temperature difference in degrees F between the two exposed faces required to cause one BTU to flow through one square foot per hour at mean temperatures indicated.

1.3.2 Fire Performance Characteristics: Provide insulation materials which are identical to those whose fire performance characteristics, as listed for each material or assembly of which insulation is a part, have been determined by testing, per methods indicated below, by UL or other testing and inspecting agency acceptable to authorities having jurisdiction.

1.3.2.1 Surface Burning Characteristics: ASTM E84

1.3.2.2 Fire Resistance Ratings: ASTM E119

1.4 DELIVERY, STORAGE AND HANDLING

Deliver, store and handle insulation in a manner to prevent damage or deterioration due to moisture or physical abuse.

1.5 SCHEDULING:

Do not install insulation until construction has progressed to the point that inclement weather will not damage or wet the insulation material. Install insulation after electric wiring, plumbing and other concealed work is in place. Insulation shall not be closed-in until it has been inspected and approved.

PART 2 - PRODUCTS

2.1 BATT INSULATION:

2.1.1 Insulation materials shall be kraft-faced or unfaced glass fiber batts or blankets of the types and R-values as specified below unless otherwise called for in the Title 24 energy calculations for the various applications as manufactured by Schuller International, Inc. (Manville), Owens-Corning Fiberglass Corp., U.S. Gypsum Co., or approved equal. All materials shall have a flame spread less than 25.

2.1.2 Roof Insulation on all concrete slab Exterior Exposures: 10mm Building insulation Blanket, Dow Corning HPI-1000 or equal, with a compiled R-value as noted on the drawings (R24) and/or Title 24 energy calculations. Install per manufacturers recommendations. See Section 07 23 03 Building Blanket Insulation.

2.1.3 Sound Insulation in Interior Walls: Shall be 3 1/2" thick unfaced sound attenuation batts designed for friction fit unless otherwise noted on the drawings. Install per manufacturers recommendations.

2.1.4 Roof Insulation in all wood frame Exterior Exposures: Kraft-faced Batts with an R-value as noted in the drawings and/or Title 24 energy calculations. Install per manufacturers recommendations.

2.1.5 Roof Board Insulation on all concrete slab Exterior Exposures: See Specification Section 07 22 17.

PART 3 - EXECUTION

3.1 INSTALLATION OF BATT INSULATION:

3.1.1 Installation of batt insulation shall be in accordance with the manufacturer's recommendations. Insulation shall be installed the full height of the wall or between joists, as indicated. Insulation shall be continuous behind all lighting switches, convenience outlet boxes, and other devices.

3.1.2 Fully insulate small areas between closely spaced framing members.

3.1.3 Do end matching neatly with ends fitting snugly or overlapped.

3.1.4 Cut and fit insulation materials around pipes, conduits, outlet boxes and other obstructions as necessary to maintain the integrity of the insulation. Where pipes are installed in spaces to receive insulation, place insulation between exterior wall and the pipe, compressing insulation if necessary.

3.1.5 Batts and Blankets: Where insulation is cut to fit small or irregular spaces, cut the insulation slightly larger than the space to ensure a tight friction fit. Insert blankets between the studs from the inside face of the wall, recessed slightly from the face of the studs where blankets are not adequately supported by friction, attach the blankets with adhesive, 9/16" long divergent point staples located at four corners and center of each blanket or with tie wires spaced not more than 36" on centers.

3.1.6 Exercise extreme care to maintain vapor barrier continuous over insulated surface. Patch all tears in vapor barrier in a manufacturers approved manner.

END OF SECTION 07 21 16

SECTION 07 22 17 - ROOF BOARD INSULATION

PART I - GENERAL

1.1 SECTION INCLUDES:

1.1.1 Rigid board type roof insulation(s) for thermal protection as part of roofing assemblies.

1.1.2 Related Sections:

1.1.2.1 Section 05300: Metal Roof Deck

1.1.2.2 Section 03300: Cast in Place Concrete.

1.2 REFERENCES:

1.2.1 Refer to specific products for applicable standards and specifications of the following organizations/agencies:

1.2.1.1 American society for Testing and Materials.

1.2.1.2 Federal Specifications (FS).

1.2.1.3 Factory Mutual (FS).

1.2.1.4 Underwriters Laboratories Inc. (UL) Classification.

1.3 SUBMITTALS:

1.3.1 Comply with submittal procedures specified in Section 01330.

1.3.2 Product Data: Manufacturer's specifications and installation instructions for insulation board and fasteners.

1.3.3 Samples:

1.3.3.1 Submit 6 inch x 6 inch sample(s) of each board type required.

1.3.3.2 Submit sample(s) of each fastener type required.

1.3.4 Shop drawings: Roof plan showing layout of boards and fastening patterns.

1.3.5 Certificates: Manufacturer's certification that materials meet specification requirements.

1.3.6 Warranty: Submit sample warranty indicating conditions and limitations.

1.4 QUALITY ASSURANCE

1.4.1 Regulatory requirements:

1.4.1.1 American Society for Testing and Materials.

1.4.1.2 Underwriters Laboratories Inc. (UL) Classification.

1.4.1.3 California State Insulation Quality Standards and Title 25 Foam Flammability Criteria.

1.4.1.4 ICBO sections on Foam Insulation

1.4.1.5 City of Los Angeles Research Report

1.5 DELIVERY, STORAGE AND HANDLING

1.5.1 Comply with general requirements specified in Section 01650.

1.5.2 Deliver insulation in packages labeled with material name, thermal value, and product code.

1.5.3 When stored outdoors, stack insulation on pallets above ground or roof deck and cover with tarpaulin or other suitable waterproof coverings.

1.6 PROJECT CONDITIONS

1.6.1 Comply with insurance underwriter's requirements applicable for products of this Section.

1.6.2 Do not install insulation on roof deck when water of any type is present. Do not apply roofing materials when substrate is damp or wet or when proper adhesive temperature cannot be maintained.

1.6.3 Pre-Installation Meeting: Prior to commencing the work of this section, the contractor shall schedule and attend a meeting at the job site to discuss conformance with requirements of the Contract Documents. Request attendance of representatives from the Resident Engineer and the Architect, Contractor, subcontractors (applicable if flashing, sealant and expansion joint contractor are contracted separately from the waterproofing contract), and other parties who are involved.

PART 2 - PRODUCTS

2.1 MANUFACTURER

2.1.1 Provide roof insulation products as manufactured by:

Johns Manville ENRGY 3 or approved equal.

2.2 MATERIALS

2.2.1 Roof Insulation Type

2.2.1.1 Closed-cell polyisocyanurate foam core and integrally laminated to glass - reinforced facers; ASTM C 1289, Type II, Class 1; UL 1256, No. 120 and 123; UL 790 (ASTM E 108), Class A; UL 263 (ASTM E 119). 2" Flat Boards and Combination of X Boards and Y Boards for Taper to create slope.

2.2.2 Insulation “R” Value: Compiled layering according to PIMA Bulletin No. 101and RIC/TIMA Bulletin No. 281-1.

2.2.3 Related Materials:

2.2.3.1 Adhesive: UL approved standard.

2.2.3.2 Base Ply: As recommended by membrane manufacturer.

PART 3 - EXECUTION

3.1 EXAMINATION

3.1.1 Examine roof deck for suitability to receive insulation.

3.1.2 Verify that roof drains, scuppers, roof curbs, equipment supports, vents and other roof accessories are secured properly and installed in conformance with Contract Drawings submittals.

3.1.3 Verify that deck is structurally sound to support installers, materials and equipment without damaging or deforming work.

3.1.3.1 Start of installation indicates installer accepts conditions of existing deck surfaces.

3.2 APPLICATION INSTALLATION

3.2.1 Install specified insulation using approved adhesive in accordance with manufacturer’s latest written instructions and as required by governing codes and Owner’s insurance carrier.

3.2.2 Install with end joints staggered and to avoid having insulation joints coinciding with joints in deck. In multi-layer installations, stagger joints in top and bottom layers.

3.3 CLEANING / PROTECTION

3.3.1 Remove trash and construction debris from insulation surface prior to application of roofing membrane.

3.3.2 Do not leave installed insulation exposed to weather. Cover and waterproof immediately after installation.

3.3.2.1 Temporarily seal exposed insulation edges at the end of each day by lapping roofing membrane over edge to form a seal. Remove membrane seal when work resumes.

3.3.2.2 Remove and replace installed insulation that has become wet or damaged with new solid and dry insulation material.

3.3.3 Protect installed insulation and roof membrane from traffic by use of protective covering materials during and after installation.

END OF SECTION 07 22 17

SECTION 07 23 03 - BUILDING INSULATION BLANKET

PART 1 - GENERAL

1.1 SUMMARY

A. Section specifies thin aerogel blanket insulation for use in construction where high R value in thin sections is required.

1.2 REFERENCE STANDARDS

B. ASTM International (ASTM): www.astm.org

1. ASTM C1728 – Standard Specification for Flexible Aerogel Insulation.
2. ASTM E84 - Standard Test Method for Surface Burning Characteristics of Building Materials.
3. ASTM C518 - Standard Test Method for Steady State Thermal Transmission Properties by Means of the Heat Flow Meter Apparatus.
4. ASTM E96 – Standard Test Methods for Water Vapor Transmission of Materials.
5. ASTM C1511 – Standard Test Method for Determining the Water Retention (Repellency) Characteristics of Glass Fiber Insulation (Aircraft Type).

B. US Green Building Council (USGBC): www.usgbc.org

1. Leadership in Energy and Environmental Design (LEED) Green Building Rating System.

C. Living Building Challenge (LBC): www.living-future.org/lbc

1. Red list of materials

D. Underwriters Laboratories of Canada (ULC): www.ulc.ca

1. CAN / ULC S102 – Standard Method of Test for Surface Burning Characteristics of Building Materials and Assemblies.

1.3 ADMINISTRATIVE REQUIREMENTS

A. Coordination: Coordinate installation of insulation with other operations that may impact construction sequence or timing to avoid construction delays or affect quality of installation.

B. Pre-installation Conference: Conduct conference at Project Site.

1.4 SUBMITTALS

C. Provide in accordance with Section 01 33 00 - Submittal Procedures:

4. Product Data:

A. List of Materials from manufacturer
B. Manufacturer's datasheet for products
C. Handling and installation instructions
D. Material Safety Data Sheets (MSDSs).

2. Samples: Submit 4"x4" minimum sample of the material used on the project.

1.5 QUALITY ASSURANCE

D. Ensure an installer who has proper training or has past experience in handling and installing aerogel blanket is contracted to do the installation work.

E. Provide protection from snow / rain for the insulation rolls if stored outside.

C. Do not contact insulation with solvents or use solvent based adhesives to adhere blanket to structure.

1.6 WARRANTY

F. Provide under provisions of Project Closeout:

5. Installer's warrantee: per Project Contract Provisions.

PART 2 - PRODUCTS

2.2 ACCEPTABLE MANUFACTURERS

G. Dow Corning Corporation, P.O. Box 994, Midland, MI 48686-0994; (800) 248-2481; www.dowcorning.com/construction or approved equal.

2.3 DESCRIPTION

H. Thin, flexible, fire resistant, compression resistant, hydrophobic, vapor permeable, silicon aerogel insulation blanket. *Dow Corning*® HPI-1000, as manufactured by Dow Corning Corporation.

2.3 SIZES

A. Rolls come in 58 +/- 2 in width.

B. Thickness:

1. 5mm / 0.2in: R 1.9 h-ft^2-F/BTU
2. 10mm / 0.4in: R R3.9 h-ft^2-F/BTU

C. Length:

1. 5mm rolls – 300ft: 1500ft2 nominal coverage
2. 10mm rolls – 150ft: 750ft2 nominal coverage

2.3 PERFORMANCE CRITERIA

A. Flexible silicon aerogel blanket

B. Comply with ASTM C1728:

a. Type I, Group 1, Category B (up to 257F)
b. Type II, Group 1, Category A or B (up to 390F)

C. Thermal resistance: R values of 8.5/in minimum per ASTM C518 tested at 75oF mean temperature.

D. Hydrophobicity: max 8% by weight maximum per ASTM C1511.

E. Fire resistance:
ASTM E84: FSI < 25, SDI < 50.
CAN / ULC – S102: FSI < 25, SDI < 50.

F. Sustainability: Living Building Challenge Red List compliant.

G. Permeance per ASTM E96: 1500 ng/Pa-m2-s (26 US Perms) minimum.

H. Acceptable manufacturers product : *Dow Corning*® HPI-1000 Building Insulation Blanket or equal.

2.4 ACCESSORIES

A. Mechanical fasteners in accordance with manufacturers written recommendations.

B. Adhesive: in accordance with manufactures written recommendations.

PART 3 - EXECUTION

3.5 INSTALLERS

A. Installers should have prior experience with aerogel blanket handling and installation or have proper training on the material usage and handling.

3.2 EXAMINATION

A. Surfaces to attach insulation should be conditioned appropriately.

1. If mechanically attached, then the surfaces should be examined for protrusions and anchor points so that the insulation can form tightly to the insulated surface.

2. If attached with adhesive, the bonding surface should be free of protrusions, dust, debris, and moisture.

3.3 HANDLING

A. Aerogel Blanket will generate some dust during cutting and handling.

1. Aerogel dust is non-hazardous to health or the environment, but can be irritating due to its tendency to absorb skin oils. Its light weight nature allows it to become respirable or enter the eyes.

2. Adequate ventilation to remove dust from the workspace, PPE in the form of gloves to protect hands, and a dust mask to reduce inhalation are recommended.

3. Refer to MSDS for further safety information.

3.4 PRECAUTIONS

A. To ensure maximum performance:

1. Do not use in environments where water saturation is expected.

2. Do not saturate with organic solvents or organic solvent based adhesives.

3. Do not use against material that bleed oils, plasticizers, or organic solvents.

3.6 APPLICATION

A. IInstallation: Install insulation in accordance with manufacturer's written recommendations.

3.7 FIELD QUALITY CONTROL

A. Field inspection: Coordinate field inspection with Resident Engineer.

3.5 CLEANING

A. Work in progress: Perform cleanup as necessary during work in progress. Provide protection for insulation from water.

B. Final Cleaning: Upon installation completion, remove surplus materials, trash, installation tools and equipment from the site.

3.6 PROTECTION

A. Protect installed products and accessories from damage during construction

END OF SECTION 07 23 03

SECTION 07 26 23 - BELOW-GRADE WATERPROOFING

PART 1 - GENERAL

1.01 Summary

A. Section includes:

1. Provide a complete hydrocarbon vapor-protective, composite sheet membrane waterproofing system.

2. Work includes all applicable sealants, waterstops and waterproofing flashings needed to ensure a complete waterproof and hydrocarbon vapor-protective membrane system for buried concrete and masonry components at locations indicated.

B. Related work:

1. Documents affecting work of this Section include, but are not necessarily limited to, General Conditions, Supplementary Conditions, and Sections in Division 1 of these Specifications.

1.02 Submittals

A. Comply with pertinent provisions of Section 01 33 00.

B. Product data:

1. Materials list of items proposed to be provided under this Section.

2. Manufacturer's specifications and other data needed to prove compliance with the specified requirements.

3. Shop Drawings or catalog illustrations in sufficient detail to show installation and interface of the work of this Section with the work of adjacent trades.

4. Manufacturer's current recommended installation procedures which, when reviewed by the Resident Engineer and the Architect, will become the basis for accepting or rejecting actual installation procedures used on the Work.

5. Written documentation of applicator's qualifications, including reference projects of similar scope and complexity, with current phone contacts of the resident engineer, architects, and owners for verification.

6. Where work of this Section may potentially contact groundwater, include manufacturer's report confirming laboratory testing of membrane system with project groundwater samples and confirming suitability for installation in Project conditions.

C. Mock-up: Prior to installation, prepare a sample panel of the work of this Section at a location on the job site where approved by the Resident Engineer and the Architect.

1. Make the sample panel in dimensions approved by the Resident Engineer and the Architect and with one panel for each of the various types of installation.

2. Show all aspects of the work of this Section to the quality specified.

3. Make necessary adjustments in the sample panel(s) and secure the Resident Engineer and the Architect's approval.

4. The sample panel(s), when approved by the Resident Engineer and the Architect, will be used as a datum point for comparison with the remainder of the work of this Section for the purpose of acceptance or rejection.

5. Upon approval of the Resident Engineer and the Architect, the sample panel(s) may become actual part of the installation required for this Work.

1.03 Quality Assurance

A. Use adequate numbers of skilled workmen thoroughly trained and experienced in the necessary crafts and completely familiar with the specified requirements and methods needed for proper performance of the work of this Section.

B. Applicator qualifications:

1. Applicator shall have at least three years experience in installing materials of types specified and shall have successfully completed at least three projects of similar scope and complexity.

2. Applicator shall designate a single individual as project foreman who shall be on site at all times during installation.

C. Convene a pre-installation job-site conference three weeks prior to commencing work of this Section:

1. Secure attendance by the Resident Engineer, Architect, Contractor, applicator, and authorized representatives of the vapor-protective waterproofing system manufacturer and interfacing trades.

2. Examine Drawings and Specifications affecting work of this Section, verify all conditions, review installation procedures, and coordinate scheduling with interfacing portions of the Work.

1.04 Delivery, Storage and Handling

A. Deliver materials to job site in manufacturer's unopened containers with all labels intact and legible at time of use.

B. Maintain the products in a dry condition during delivery, storage, handling, installation, and concealment.

1.05 Substrate Conditions

A. Provide applicator with substrates that are free of standing water, dirt and debris, loose material, voids and protrusions or deformations which may inhibit application or performance of waterproofing.

1. Where work of this Section will be installed on earth, provide subgrades that are stable, smoothed and compacted to minimum 85 percent modified proctor density.

2. Where work of this Section will be installed on earth retaining system, fill gaps and voids in earth retaining system to conform with waterproofing manufacturer's requirements; fill voids and cavities exterior of wood-lagged shoring with sand or cement slurry; remove nails in wood lagging.

3. Where work of this Section will be installed on concrete or masonry, provide substrates that are free of voids deeper than 3/8" and free of surface protrusions more than 1/4" above the surface.

4. Where work of this Section will be installed on concrete footings, provide wood float or better finish to surfaces scheduled to receive the vapor-protective waterproofing.

5. Where work of this Section will include bentonite waterstop strips, provide concrete surfaces as required for that installation.

6. Rigidly install penetrations of vapor-protective waterproofing for detailing procedures.

B. Groundwater:

1. Where work of this Section will encounter groundwater, provide waterproofing manufacturer with sufficient groundwater samples taken from Project at logged locations for manufacturers laboratory analysis.

2. Manufacturer shall provide written report confirming laboratory testing with regard to suitability of waterproofing system for installation in Project conditions.

1.06 Warranty

A. Deliver to the Resident Engineer and the Architect signed copies of the following written warranties against defective materials and workmanship for a period of five years following date of completion. Warrant that installed waterproofing system shall be free of defects including waterproofing failure resulting from substrate cracking up to 1/8 inch.

1. Manufacturer's standard warranty covering materials.

2. Applicator's standard warranty covering workmanship.

PART 2 – PRODUCTS

2.01 General

A. Where indicated on the Drawings, provide a complete dual-waterproofing, hydrocarbon vapor-protective, composite sheet membrane system composed of high-density polyethylene having a sodium-bentonite face with modified overlap area providing for non-reinforced integral seam tape within overlaps having the following attributes.

1. Acceptable products:

a. Paraseal GM/LG

b. Or approved equal.

2. Obtain primary waterproofing materials of each type required from a single manufacturer to greatest extent possible. Provide accessory materials that are approved by primary waterproofing manufacturer.

B. Membrane properties: Equal to Tremco "Paramount Paraseal GM/LG" for use on buried vertical and horizontal surfaces such as backfilled foundation and retaining

walls, between-slab plaza and parking decks, earth-covered roofs and below slab with the bentonite-side down:

1.	Puncture resistance	169 lbs.	ASTM E 154
2.	Tensile strength	4,000 psi	ASTM D 412
3.	Water vapor permeance	0.03 perms	ASTM E 96
4.	Percent elongation	700 percent	ASTM D 638, Type 4 Dumbbell
5.	Resistance to hydrostatic head	150 feet	ASTM D 751
6.	Warranted crack-bridging capability	1/8 inch	

2.02 Accessories

A. For installation at horizontal-to-vertical junctures, provide "Paramount Paragranular" loose bentonite granules in weatherproof 50 lb. bags and capable of swelling to occupy a minimum volume of 17 ml when 2 grams are dispersed into deionized water.

B. For detailing vertical junctures, provide "Paramount Paramastic" non-hydrated expandable mastic of trowelable consistency containing not less that 55 percent high swelling Wyoming sodium-bentonite.

C. Provide the following fasteners as needed:

1. Case-hardened steel nail with fluted shank having a minimum 1" length and a minimum 1" diameter cap for use on green concrete and masonry substrates.

2. Powder shot steel pin having a minimum 3/4" diameter washer for use on concrete substrates.

3. Steel staples approved by membrane manufacturer for use according to Project conditions.

D. Seam tape: "Paramount Para JT Tape" non-reinforced, adhesive tape of partially cross-linked polymeric elastomers 2" wide by 1/8" thick for molding form-fit seals at penetrations, around difficult contours and for integral seam seals within overlaps.

E. Provide "Paramount Paraterm Bar" extruded aluminum bar with upper flange to receive sealant for terminations at grade line and on parapet walls.

F. Provide "Dymonic 100" one-part, gun-grade polyurethane sealant for completing termination seals and other sealing recommended by manufacturer.

G. Provide "Paramount Parastick'N'Dry" pressure sensitive, double-sided tape laminate of bentonite sandwiched between a netting and non-woven fabric for wrapping through-concrete imbeds and other detailing.

H. Provide "Paramount Superstop" flexible, reinforced, bentonite-laminate waterstop strips 1/2" by 1" by 20'-0" with pressure-sensitive adhesive backing for sealing static cold joints in concrete.

I. Provide "Paramount Paraprimer" versatile adhesive bonding agent formulated for use with tape and pressure-sensitive waterproofing accessories.

J. Provide “TREMDrain Series” composite drainage mat consisting of polypropylene core and filter fabric.

K. Provide base sheet of minimum 6 mil polyethylene sheet for use as hydration barrier.

L. Provide protection course as recommended by the waterproofing system manufacturer.

2.03 Other Materials

A. Provide other materials, not specifically described but required for a complete and proper installation, as selected by the Contractor and approved by the vapor-protective waterproofing system manufacturer as compatible, subject to review of the Resident Engineer and the Architect.

PART 3 - EXECUTION

3.01 Surface Conditions

A. Coordinate as required with other trades to assure proper and adequate provision in the work of those trades for interface with the work of this Section and to prevent damage to installed vapor-protective waterproofing system.

B. Applicator shall examine the areas and conditions under which work of this Section will be performed.

1. Verify conformance with manufacturer's requirements.

2. Report unsatisfactory conditions in writing to the Resident Engineer and the Architect.

3. Do not proceed until unsatisfactory conditions are corrected.

3.02 Preparation

A. General: Surface preparation and detailing procedures shall be in accord with this Specification and the Drawings. Comply with waterproofing system manufacturer's instructions except where more stringent requirements are indicated or specified.

B. Lay out project to determine and anticipate conditions prior to start of work.

1. Note termination and penetration conditions to determine methods for creating a waterproof and vapor-protective envelope. Verify that where below-grade waterproofing extends to grade, other waterproofing provides for substrate continuing above grade.

3.03 Installation

A. General: Install waterproofing system in accord with manufacturer's instructions, recommendations and specific project instructions as applies to the Work.

1. Coves: Form 2" coves with granular bentonite at horizontal-to-vertical junctures such as at footings and horizontal shelves. Form 2" coves with sealant or elastomeric flashing at vertical inside corners and under ledges.

2. Place membrane in manner that assures minimum handling. Fit closely to and seal around inlets, outlets and other penetrations. Press membrane tight to corner surfaces and securely fasten.

3. Priming: Prime surfaces of membrane, concrete, masonry, metal and plastic with substrate primer immediately prior to application of tapes and pressure-sensitive accessories.

4. Overlap seals: Remove bentonite from face of membrane inside overlaps, extending 2" in from lap leading edges, by removing factory installed edge tape or by scraping; wipe clean HDPE surfaces inside overlaps just prior to contacting with tape using lint free white cloths soaked in solvent; install non-reinforced integral seam tape to HDPE surfaces cleaned of bentonite along lap edges strictly aligning the adhesive mass on membrane leading edge and not behind it; roll-press seam tape into place prior to removal of the release-paper backing. Align overlaps, remove release-paper backing from seam tape within overlaps and immediately roll-press membrane sheets together using 2" wide hand-held seam roller to effect a vapor tight seal.

5. Gradeline termination: Terminate membrane with termination bar finished off with sealant bead or terminate to elastomeric flashing in accord with manufacturer's recommendations.

6. Construction joints: Protect static construction joints in concrete with flexible, reinforced, bentonite-laminate waterstop strips. Install to suitable hardened concrete surface prior to subsequent concrete placement.

B. Below slab installation:

1. Bentonite-side up use Paraseal GM-LG Membrane:

a. Install membrane sheets bentonite-side up with edges overlapped 3-1/2" over stable, smoothed and compacted subgrade or mud slab. Position membrane sheets to stagger end laps 12".

b. Align overlaps and effect overlap seals.

c. Install vapor-protective waterproofing to wrap footings and grade beams where shown on Drawings.

d. Turn membrane up 6" minimum along bottom edges of slabs, wrapped footings and wrapped grade beams. Install double layer of membrane along bottom edges of slabs, wrapped footings and wrapped grade beams extending 6" minimum from edges in each direction. Avoid overlaps coinciding between layers. Provide for tie-in of subsequent membrane installation.

e. Install membrane across top surfaces of unwrapped footings or mud slab and turn up 4" minimum onto vertical faces of concrete walls and columns. Terminate leading edges with continuous seam tape and 3" wide double-sided bentonite tape installed edge-to-edge aligned on leading edge on face of membrane toward wall or column surface in accord with manufacturer's recommendations to effect a vapor tight seal.

f. Install vapor-protective waterproofing to overlap 4" minimum onto top surfaces of unwrapped grade beams and carry to extent indicated on Drawings. Terminate leading edges with continuous seam tape and 3" wide double sided bentonite tape installed edge-to-edge aligned on leading edge on face of membrane toward grade beam in accord with manufacturer's recommendations to effect a vapor tight seal.

g. Waterproof penetrations with seam tape and bentonite waterstop in accord with manufacturer's recommendations to effect a vapor tight seal.

h. Verify membrane is protected from damage caused by rebar and support chairs.

i. Protect exposed bentonite from moisture with temporary plastic sheets. Remove plastic sheets before final covering.

j. Inspect and repair damaged material immediately before concrete placement.

C. Backfilled wall installation use Paraseal GM/LG Membrane:

1. Install membrane sheets in vertical or horizontal lifts with HDPE-side facing applicator to prepared surfaces conforming to manufacturer's requirements.

2. Securely fasten membrane sheets to wall surfaces with fasteners along top edge at 12" on center. Securely fasten at 24" on center along vertical edge to be overlapped by subsequent membrane sheet. Align fasteners to be fully covered by overlapping membrane.

3. Install subsequent membrane sheets to overlap previous sheets 3-1/2". Align overlaps and effect overlap seals.

4. Start horizontal orientation at lowest portion of wall and overlap in shingle fashion with staggered end laps.

5. Extend membrane onto footing surfaces 6" minimum. Overlap below-slab membrane 6" minimum. Securely fasten 18" on center to tops of footings and horizontal shelves. Cover fasteners completely with seam tape and roll-press effecting a vapor tight seal.

6. Waterproof penetrations in accord with manufacturer's recommendations to effect a vapor tight seal.

END OF SECTION 07 26 23

SECTION 07 27 23 - THERMAL BARRIER

PART I - GENERAL

1.1 DESCRIPTION:

1.1.1 Work in this section includes, but is not limited to: thermal barrier.

1.1.2 Related work specified elsewhere:

1.1.2.1 Roof insulation

1.1.2.2 Roof membrane

1.2 SUBMITTALS:

1.2.1 Product data: Submit manufacturer's descriptive literature indicating material composition, thickness, sizes and fire resistance.

1.2.2 Shop drawings: Submit s hop drawings indicating fastener and adhesive patterns for FMRC wind uplift resistance specified.

1.2.3 Certification: Submit manufacturer's written certification that product meets specified fire-resistance requirements.

1.3 DELIVERY, STORAGE AND HANDLING:

1.3.1 Delivery: Delivery materials to the job site in manufacturer's original packaging, containers and bundles with manufacturer's brand name and identification intact and legible.

1.3.2 Storage and Handling: Dens-Deck (DD) roof board must be kept dry during storage and application. Outside storage must be off ground and protected by a breathable waterproof covering. If DD becomes wet, it must be dried before installation. DD must be roof same day as laid.

1.4 LIMITATIONS:

The need for a separator sheet or sheet between the Dens-Deck (DD) roof board and the roofing membrane shall be determined by the roof membrane manufacturer.

1.4.1 Panels must be kept dry. Apply only as much DD as can be covered by a roof membrane system in the same day.

1.4.2 Accumulation of water due to leaks or condensation in or on Dens-Deck roof board must be avoided during construction and after construction.

1.4.3 Conditions beyond the control of G-P Gypsum such as weather conditions, dew, application temperatures and techniques may cause adverse effects with adhered

roofing systems. Always consult roofing manufacturers for their specific instructions on applying their products to Dens-Deck roof board.

1.4.4 Dens-Deck is designed to wet with a properly designed roof system. The actual use of Dens-Deck roof board as a roofing component is the responsibility of the roofing systems designing authority. G-P Gypsum does not offer roofing systems design services.

1.4.5 Consult membrane manufacturer for specific installation instructions.

1.4.6 Pre-Installation Meeting:

1.4.6.1 Prior to commencing the work of this section, the contractor shall schedule and attend a meeting at the job site to discuss conformance with requirements of the Contract Documents. Request attendance of representatives from the Resident Engineer and the Architect, Contractor, subcontractors (applicable if flashing, sealant and expansion joint contractor are contracted separately from the waterproofing contract), and other parties who are involved.

PART 2 - PRODUCT

2.1 GYPSUM DECKING:

2.1.1 Acceptable Product: G-P Gypsum Corporation ¼" Dens-Deck roof board or approved equal.

2.1.2 Composition: Nonstructural, glass mar-embedded, water-resistant gypsum core panel.

2.1.3 Size: Nominal 4'x8', special order 4'x4'.

2.1.4 Thickness: 1/4" (6.4 mm) Dens-Deck roof board.

2.1.5 Fire Resistance: Flame spread 0, smoke developed 0, when tested in accordance with ASTM F.84. Noncombustible when tested in accordance with ASTM F.136.

PART 3 - EXECUTION

3.1 GENERAL:

3.1.1 Provide Dens-Deck roof board where indicated on drawings using fastening system specified.

3.1.2 Use maximum lengths possible to minimize number of joints. Locate edge joints parallel to and on deck ribs. Stagger end joints of adjacent lengths of Dens-Deck roof board.

3.2 GYPSUM DECKING INSTALLATION AT ROOFS:

3.2.1 Adhered Systems: Insta-Foam Products, Inc.'s Insta-Stik Adhesive used with ¼" Dens-Deck roof board. Contact Insta Foam Products, Inc. for details at 1-800-800-FOAM.

END OF SECTION 07 27 23

SECTION 07 44 56 - FIBER-CEMENT PANELS

PART 1 - GENERAL

1.1 RELATED DOCUMENTS AND DESCRIPTION OF WORK:

The work includes the furnishing, delivery, and installation of wood siding and accessories as indicated on drawings and as specified. The Conditions of the Contract and Division 1 apply to this section as fully as if repeated herein.

1.2 QUALITY ASSURANCE:

1.2.1 Manufacturer's Product Warranty: Provide Manufacturer's product warranty.

1.2.2 Pre-Application Soffit Conference: Approximately two weeks prior to scheduled commencement of installation and associated work, General Contractor shall meet at project site with installer, installer of each component of associated work, Architect, and Resident Engineer directly concerned with performance of the work. Record (Contractor) discussions of conference and decisions and agreements (or disagreements) reached, and furnish copy of record to each party attending. Review foreseeable methods and procedures related to work

1.3 SUBMITTALS:

1.3.1 Submittal procedures and quantities are as specified in Section 01 33 00.

1.3.2 Product Data: Submit manufacturer's technical product data, installation instructions and recommendations for fiber cement soffit panel and accessories required. Include data substantiating that materials comply with requirements.

1.3.3 Samples: Submit 3 pieces of soffit panel of types selected.

1.4 DELIVERY, STORAGE AND HANDLING

1.4.1 Deliver materials in original packages bearing the manufacturer's name and label.

1.4.2 Store materials at a dry location, raised above the ground and protected from damage. Do not open package until ready for installation.

PART 2 - PRODUCTS

2.1 MATERIALS:

2.1.1 Fiber cement shall be “Hardiesoffit” fiber cement soffit panels as manufactured by James Hardie Building Products, Inc. or approved equal. Color shall be painted as described under separate section of this specification.

2.1.2 “Hardiesoffit” shall be factory primed.

2.1.3 Soffit panel pattern shall be:

2.1.3.1 "Hardiesoffit" – Non-Vented Smooth, 4' x 8'.

2.1.4 Provide all materials, accessories required for a complete system.

2.1.5 Trim and Venting Accessories: Edge Trim accessories shall be aluminum shaped reglets as shown on the drawings and as manufactured by Fry Reglet Architectural Metals or approved equal.

PART 3 - EXECUTION

3.1 INSPECTION OF SUBSTRATE:

Examine substrate surfaces to receive fiber cement soffit and associated work and conditions under which soffit will be installed. Do not proceed with soffit until unsatisfactory conditions have been corrected in a manner acceptable to the installer. Start of work of this section constitutes acceptance of framing surfaces.

3.2 INSTALLATION OF FIBER CEMENT SOFFIT:

3.2.1 Install fiber cement and accessories in accordance with the manufacturer's written installation instruction. Flash, seal and fasten so as to provide a complete weather tight installation.

END OF SECTION 07 44 56

SECTION 07 54 00 - ADHERED PVC MEMBRANE ROOFING

PART 1 GENERAL CONDITIONS

1.1 DESCRIPTION

A. Scope

The extent of the PVC roofing system work is defined to include roofing, flashing, and roofing accessories integrally related to roofing installation.

Contractor shall coordinate with all other trades that directly influence the roof system application to provide a watertight installation of all roof membrane and roof flashings.

Contractor shall verify condition of substrate, curbs, penetrations, flashings, equipment supports, etc. and shall notify the owner of any discrepancies in the scope of work prior to commencement of roofing.

B. System Description-Upper roof Location

Over the new plywood deck, the contractor is to install a single layer of a 10 mil polyethylene air barrier. The air barrier is to be loose-laid over the deck with all edges over-lapping 4 inches and all joints sealed with butyl tape. The air barrier is to be extended and sealed to the perimeter of the building as well as all deck penetrations to provide continuity of the building's air envelope. All roof penetrations must be sealed on the vertical surface utilizing butyl tape.

Over the properly installed air barrier, provide all accessories to install polyisocyanurate cricket insulation. The crickets are to be mechanically fastened using manufacturer approved fasteners and plates and in accordance with this specification and drawings.

Over the mechanically fastened crickets, install a factory primed ¼" fiberglass reinforced protection board. The protection board is to be mechanically fastened in accordance with the manufacturer's written instructions and with manufacturer approved fasteners and plates.
Over the factory primed ¼" protection board, install a new fully adhered 60 mil PVC membrane. The color of the membrane is to be "Title 24 Compliant" Tan. The new roof system shall be installed in accordance with this specification and details.
All parapet walls are to be fully adhered utilizing manufacturer approved adhesives and flashing membrane matching the thickness of the field membrane.

Provide an allowance in base bid to install PVC walk tread as required by the Owner/Owner's Representative.

All clad metal used is to be stainless steel.

C. System Description-Lower and Midlevel Roof Location

Over the new concrete deck, the contractor is to provide all accessories to install self-adhered vapor barrier, and full tapered polyisocyanurate insulation system adhered using manufacturer approved low rise foam adhesive and in accordance with the manufacturer's specifications. Average insulation R Value shall equal R-19.

Over the new tapered polyisocyanurate insulation system, install a factory primed ¼" fiberglass reinforced protection board. The protection board is to be fully adhered in accordance with the manufacturer's written instructions and with manufacturer approved low rise foam adhesive.

Over the factory primed ¼" fiberglass reinforced protection board, install a fully adhered 60 mil PVC membrane. The color of the membrane is to be "Title 24 Compliant" Tan. The new roof system shall be installed in accordance with this specification and details.

All parapet walls are to be fully adhered utilizing manufacturer approved adhesives and flashing membrane matching the thickness of the field membrane.

Provide an allowance in base bid to install PVC walk tread as required by the Owner/Owner's Representative.

All clad metal used is to be stainless steel.

E. Upon successful completion of work the following warranties may be obtained:

Membrane Manufacturer 30 year System Warranty

Applicator 5 year Warranty

1.2 QUALITY ASSURANCE

A. This system shall be applied only by a Roofing Contractor authorized by the membrane manufacturer. ("Approved Applicator").

B. Third Party Inspections:

An authorized/licensed independent inspector, hired by the Contractor shall be present at all times during the installation of the PVC roofing system work. Prior to and during the installation of the PVC roofing system, he will inspect and approve (if satisfactory) required items per the manufacturer's recommendations. Work shall not proceed until inspections are complete and the inspected work is approved.

Upon completion of the installation and the delivery to the membrane manufacturer by the Applicator of a certification that all work has been done in strict accordance with the contract specifications and the membrane manufacturer's requirements, an inspection shall be made by the inspector, a Technical Representative of the manufacturer, Architect, and Owner's representative, to review the installed roof system.

C. There shall be no deviation made from the Project Specification or the approved shop drawings without prior written approval by the Owner, the Owner's Representative and the membrane manufacturer.

D. All work pertaining to the installation of specified membrane and flashings shall only be completed by Applicator personnel trained and authorized by the membrane manufacturer in those procedures.

E. Membrane to have no formulation changes in the last (15) years as certified by the manufacturer.

F. Manufacturer's warranty shall have "No Dollar Limit" for the replacement of defective materials and/or labor and shall not contain any exclusion for ponding water.

G. Membrane manufacturer shall submit; third-party test data documenting the proposed equal has a membrane "polymer thickness" to be certified to the specified thickness, ASTM (+/-) mil tolerances are not acceptable.

H. Membrane shall have a minimum of twenty-two (22) mils of waterproofing polymers above the reinforcements as documented by a third party source.

J. Membrane manufacturer to confirm in writing that they directly manufacture the roofing membrane (private labeled membranes are not acceptable).

K. Provide PRE-CONSTRUCTION CONFERENCE per 3.01.

L. Prior to demobilization from the site, the work shall be reviewed per 1.02 Item B above.

M Provide POST-CONSTRUCTION CONFERENCE per 3.11.

1.3 SUBMITTALS

A. Submittals of Specified Material

At the time of award, the Applicator shall submit to six (6) copies of the following:

1. Samples of each primary component to be used in the roof system and the manufacturer's current literature for each component.

2. Sample copy of Manufacturer's 30 year System Warranty.

3. Sample copy of Applicator's 5 year Workmanship Warranty.

4. Certifications Letter from proposed Roofing Manufacturer indicating the actual polymer thickness of the product supplied for this project is 60 mils. Polymer thickness variance shall not exceed ± 0.001 inch.

5. Certification from the Applicator that the system specified meets all identified code and insurance requirements as required by the Specification.

6. Material Safety Data Sheets (MSDS)

B. Submittals of Equals

Submit proposed equals to be considered for use on this project no less than ten (10) days prior to bid date. Proposed roof systems which have been reviewed and accepted will be listed in an addendum prior to bid date; only then will roof systems be accepted at bidding.

Submittals shall include the following:

1. Copies of Specification.

2. Samples of each primary component to be used in the roof system and the manufacturer's current literature for each component.
3. Sample copy of Manufacturer's warranty, must meet all requirements as outlined in Quality Assurance 1.02-F and Warranty 1.08-A.

4. Sample copy of Applicator's warranty.

5. Submit documentation that materials and system meet the standards as set forth by Quality Assurance 1.02A through J.

6. Certifications by manufacturers of roofing and insulating materials that all materials supplied comply with all requirements of the identified ASTM and industry standards or practices and requirements of this specification including warranty requirements.

7. Certification from the Applicator that the system specified meets all identified code and insurance requirements as required by the Specification.

8. Letter from the proposed manufacturer confirming the number of years it has DIRECTLY manufactured the proposed roof system under the trade names and/or trademarks as proposed.

9. Material Safety Data Sheets (MSDS)

10. Copies of all Code Ratings as described in Section 1.04

1.4 CODE REQUIREMENTS

The applicator shall submit evidence that the proposed roof system meets the requirements of the local building code and has been tested and approved or listed by the following test organizations. These requirements are minimum standards and no roofing work shall commence without written documentation of the system's compliance, as required in the "Submittals" section of this specification.

A. Factory Mutual Research Corporation (FM) - Norwood, MA

Class 1-90

B. Underwriters Laboratories, Inc. - Northbrook, IL

Class A assembly

1.5 PRODUCT DELIVERY, STORAGE AND HANDLING

A. All products delivered to the job site shall be in the original unopened containers or wrappings bearing all seals and approvals.

B. Handle all materials to prevent damage. Place all materials on pallets and fully protect from moisture.

C. Membrane rolls shall be stored lying down on pallets and fully protected from the weather with clean canvas tarpaulins. Unvented polyethylene tarpaulins are not accepted due to the accumulation of moisture beneath the tarpaulin in certain weather conditions that may affect the ease of membrane weldability.

D. As a general rule all adhesives shall be stored at temperatures between 40º F and 80º F. Read instructions contained on adhesive canister for specific storage instructions.

E. All flammable materials shall be stored in a cool, dry area away from sparks and open flames. Follow precautions outlined on containers or supplied by material manufacturer/supplier.

1.6 JOB CONDITIONS

A. Roofing materials may be installed under certain adverse weather conditions but only after consultation with the manufacturer, as installation time and system integrity may be affected.

B. Only as much of the new roofing as can be made weathertight each day, including all flashing and detail work, shall be installed. All seams shall be heat welded before leaving the job site that day.

C. All surfaces to receive new membrane or flashings shall be dry. Should surface moisture occur, the Applicator shall provide the necessary equipment to dry the surface prior to application.

D. All new and temporary construction, including equipment and accessories, shall be secured in such a manner as to preclude wind blow-off and subsequent roof or equipment damage.

E. Uninterrupted waterstops shall be installed at the end of each day's work and shall be completely removed before proceeding with the next day's work. Waterstops shall not emit dangerous or unsafe fumes and shall not remain in contact with the finished roof as the installation progresses. Contaminated membrane shall be replaced at no cost to the Owner.

F. The Applicator is cautioned that certain roofing membranes are incompatible with asphalt, coal tar, heavy oils, roofing cements, creosote and some preservative materials. Such materials shall not remain in contact with PVC membranes. The Applicator shall consult the membrane manufacturer regarding compatibility, precautions and recommendations.

G. Arrange work sequence to avoid use of newly constructed roofing as a walking surface or for equipment movement and storage. Where such access is absolutely required, the contractor requiring access shall provide all necessary protection and barriers to segregate the work area and to prevent damage to adjacent areas. A substantial protection layer consisting of plywood over 9 oz. felt or plywood over insulation board shall be provided for all new and existing roof areas that receive rooftop traffic during construction.

H. Prior to and during application, all dirt, debris and dust shall be removed from surfaces by vacuuming, sweeping, blowing with compressed air and/or similar methods.

I. The Applicator shall follow all safety regulations as required by OSHA and any other applicable authority having jurisdiction.

J. All new roofing waste material (i.e., scrap roof membrane, empty cans of adhesive) shall be immediately removed from the site by the Applicator and properly transported to a legal dumping area authorized to receive such material.

K. The Applicator shall take precautions that storage and/or application of materials and/or equipment does not overload the roof deck or building structure.

L. Flammable adhesives and deck primers shall not be stored and not be used in the vicinity of open flames, sparks and excessive heat.

M. All rooftop contamination that is anticipated or that is occurring shall be reported to the membrane manufacturer to determine the corrective steps to be taken.

N. The Applicator shall verify that all roof drain lines are functioning correctly (not clogged or blocked) before starting work. Applicator shall report any such blockages in writing (letter copy to the membrane manufacturer) to the Owner's Representative for corrective action prior to the installation of the PVC roof system.

O. Site cleanup, including both interior and exterior building areas that have been affected by construction, shall be completed to the Owner's satisfaction.

P. The PVC membrane shall not be installed under the following conditions without consulting the membrane manufacturer’s Technical Department for precautionary steps:

The roof assembly permits interior air to pressurize the membrane underside.

Any exterior wall has 10% or more of the surface area comprised of opening doors or windows.

The wall/deck intersection permits air entry into the wall flashing area.

Q. Protective wear shall be worn when using solvents or adhesives or as required by job conditions.

R. PVC membranes are slippery when wet or covered with snow, frost, or ice. Working on surfaces under these conditions is hazardous. Appropriate safety measures must be implemented prior to working on such surfaces. Always follow OSHA and other relevant fall protection standards when working on roofs.

1.7 BIDDING REQUIREMENTS

A. Pre-Bid:

1. Provide any questions to the drawings and specifications at least 10 days prior to bid.

1.8 WARRANTIES

A. Membrane Manufacturer's 30 Year System Warranty

Upon successful completion of the work to the membrane manufacturer's satisfaction and receipt of final payment, the 30 Year System Warranty shall be issued. The warranty shall have "No Dollar Limit" for the replacement of defective materials and/or labor and shall not contain any exclusion for ponding water for any length of time.

B. Applicator 5 Year Warranty

The Applicator shall supply the Owner with a separate 5 year workmanship warranty. In the event any work related to roofing, flashing, or metal is found to be within the Applicator warranty term, defective or otherwise not in accordance with the Contract Documents, the Applicator shall repair that defect at no cost to the Owner. The Applicator's warranty obligation shall run directly to the Owner, and a copy shall be sent to the membrane manufacturer.

C. Owner Responsibility

Owner shall notify both the membrane manufacturer and the Applicator of any leaks as they occur during the time period when both warranties are in effect.

PART 2 PRODUCTS

2,1 GENERAL

A. The basis of design for the roof system is Sika Sarnafil or equal. Equals must comply with Quality Assurance section 1.02 and Submittal section 1.03B.

2.2 MEMBRANE

A. Sarnafil® 60 mil G410 fiberglass reinforced membrane with a lacquer coating. Other manufacturers offering acceptable products include the following:

FiberTite

Tremco TPA

B. Membrane shall conform to ASTM D4434 &D6754 (latest version), "Standard for Polyvinyl Chloride Sheet Roofing". Classification: Type II & III, Grade I.

1. Sarnafil G410, 60 mil minimum, thermoplastic membrane with fiberglass mat reinforcement.

C. Certified Polymer Thickness

ASTM +/- tolerance for membrane thickness is not accepted.

D. Color of Membrane

1. “Title 24 Compliant” Tan, initial reflectivity of 0.73, initial emissivity 0.85, solar reflective index (SRI) of 89.

2;3 FLASHING MATERIALS

A. Wall/Curb Flashing

G410 Flashing Membrane

A 60 mil fiberglass reinforced membrane available in “Title 24 Compliant” Tan adhered to approved substrate using VOC compliant adhesive.

Sarnaclad – Stainless Steel

A PVC coated, heat weldable sheet metal capable of being formed into a variety of shapes and profiles. Sarnaclad is a stainless steel sheet metal with an unsupported Sarnafil membrane laminated on one side.

B. Miscellaneous Flashing

Reglet Termination Bar

A heavy-duty, extruded aluminum flashing termination reglet used at walls and large curbs. Reglet termination bar is produced from 6063-T5, 0.10 inch - 0.12 inch thick extruded aluminum. The Reglet has a 2¼ inch deep profile, and is provided in 10 foot lengths. Use prefabricated reglet mitered inside and outside corners where walls intersect.

Multi-Purpose Sealant

A proprietary sealant used at flashing terminations. Consult Product Data Sheet for additional information.

VOC Compliant Solvent Based Adhesive

A VOC compliant adhesive used to attach membrane to flashing substrate.

2.4 DECK PRIMERS

Sarnavap Self-Adhered Primer WB

A water-based primer designed for use with Sarnavap Self-Adhered vapor barrier to promote adhesion to most substrates. Particularly recommended when use of solvent-based primer is not advised or permitted. Consult Product Data Sheet for additional information.\

2.5 VAPOR BARRIERS

A. Sarnavap-10

A 10 mil thick polyethylene vapor barrier/air barrier. Air/Vapor Barrier is supplied in a folded panel that is rolled onto a core. The core width is 5 feet. When unrolled off the core and unfolded, the sheet dimensions are 20 feet wide by 100 feet long. Consult Product Data Sheet for additional information.

Sarnavap Self-Adhered

A 32 mil self-adhesive vapor barrier that can also serve as temporary roof protection. Sarnavap Self-Adhered is available in rolls 44.9 inches x 133.8 feet. Consult Product Data Sheet for additional information.

2.6 INSULATION BOARD

A. Tapered Polyisocyanurate Insulation

A rigid isocyanurate foam insulation with black mat facers. Tapered Polyisocyanurate insulation is available in 4 x 4 ft and 4 x 8ft sizes and in a various thicknesses. Consult Product Data Sheet for additional information.

2.7 PROTECTION BOARD

A. Dens Deck Prime

A siliconized gypsum, fire-tested hardboard with glass-mat facers and factory applied primer. Dens Deck Prime is provided in a 4 x 8 ft board size and in a thickness of 1/4".

2.8 ATTACHMENT COMPONENTS

A. Protection Board / Insulation plate: Used with the #12 fasteners to attach protection and insulation boards to roof deck. The cover board plate is a 3 inch square 26 gauge stamping of SAE 1010 steel with an AZ 55 Galvalume coating.

B. Protection Board / Insulation fastener: A #12 corrosion-resistant fastener used with plates to attach protection and insulation boards to steel or wood roof decks. The #12 fastener has a modified buttress thread, a shank diameter of approximately 0.168 inch and a thread diameter of approximately 0.214 inch. The driving head has a diameter of approximately 0.435 inch with a #3 Phillips recess for positive engagement.

C. Water Based Membrane Adhesive:

A water-based adhesive used to attach the membrane to horizontal or near-horizontal substrates.

Notes:

1. There is a significant increase in drying time due to an increase in humidity and/or a decrease in temperature. Do not install when outdoor or substrate temperatures during drying period are expected to fall below 40º F.
2. Do not allow water based membrane adhesive to skin-over or surface-dry prior to installation of membrane.
3. Use a water-filled, foam-covered lawn roller to consistently and evenly press the membrane into the adhesive layer.

D. Insulation and Protection board adhesive: A low odor, VOC compliant, one step, low-rise urethane foam used to attach insulation and protection board to approved compatible substrates. Adhesive is applied with a gravity fed applicator or by hand with a dual component caulk gun. Additional adhesive may be required for rougher surfaces. Consult Product Data Sheets for additional information. Application rate is as follows:

1. Coverage - Approximately 550 square feet per case. Rates are based on an application pattern of 4 ribbons, 1/4 to 1/2 inch beads, 12 inches on center per 4 x 4 feet board. Coverage rates may vary over irregular surfaces

E. Peel stop: An extruded aluminum, low profile bar used with certain fasteners to attach to the roof deck or to walls/curbs at terminations, penetrations and at incline changes of the substrate. Peel stop is a 1 inch wide, flat aluminum bar 1/8 inch thick that has predrilled holes every 6 inches on center.

2.9 WALKWAY PROTECTION

A.Walk Tread: A polyester reinforced, 0.096 inch, weldable membrane with surface embossment. Used as a protection layer from rooftop traffic. Walk tread is supplied in rolls of 3.25feet wide and 50 feet long.

2.10 MISCELLANEOUS ACCESSORIES

A. Aluminum Tape: A 2 inch wide pressure-sensitive aluminum tape used as a separation layer between small areas of asphalt contamination and the membrane and as a bond-breaker under the coverstrip at the PVC Clad joints.

B. PVC Cleaner: A high quality solvent cleaner used for the general cleaning of residual asphalt, scuff marks, etc., from the membrane surface. PVC Cleaner is also used daily to clean seam areas prior to hot-air welding in tear off or dirty conditions or if the membrane is not welded the same day it is unrolled.

C. Multi-Purpose Butyl Tape: A high performance sealant tape used with metal flashings as a preventive measure against air and windblown moisture entry. Also used as sealant tape for the air/vapor barrier.

2.11 SEALANTS

A. Multi-Purpose Sealant (for termination details).

B. Two Part urethane sealant.

C. Depending on substrates, the following sealants are options for temporary overnight tie-ins:

1. Two Part urethane sealant.
2. Multiple layers of roofing cement and felt.
3. Spray-applied, water-resistant urethane foam.
4. Mechanical attachment with rigid bars and compressed sealant.

2.12 MISCELLANEOUS FASTENERS AND ANCHORS

A. All fasteners, anchors, nails, straps, bars, etc. shall be post-galvanized steel, aluminum or stainless steel. Mixing metal types and methods of contact shall be assembled in such a manner as to avoid galvanic corrosion. Fasteners for attachment of metal to masonry shall be expansion type fasteners with stainless steel pins. All concrete fasteners and anchors shall have a minimum embedment of 1¼ inch and shall be approved for such use by the fastener manufacturer. All miscellaneous wood fasteners and anchors used for flashings shall have a minimum embedment of 1 inch and shall be approved for such use by the fastener manufacturer.

PART 3- EXECUTION

3.1 PRE-CONSTRUCTION CONFERENCE

A. The Applicator, Owner's Representative and Manufacturer shall attend a pre-construction conference.

B. The meeting shall discuss all aspects of the project including but not limited to:

Safety
Set up
Construction schedule
Contract conditions
Coordination of the work

3.2 SUBSTRATE PREPARATION

The roof deck and existing roof construction must be structurally sound to provide support for the new roof system. The Applicator shall load materials on the rooftop in such a manner as to eliminate risk of deck overload due to concentrated weight. The Owner's Representative shall ensure that the roof deck is secured to the structural framing according to local building code and in such a manner as to resist all anticipated wind loads in that location.

New Construction

Poured Concrete Deck

The roof deck shall be installed and cured in accordance with industry standards. The surface shall have a smooth and level finish and shall be free of dust, excess moisture, oil-based curing agents and loose debris. Sharp ridges or other projections above the surface shall be removed before roofing.

Wood Deck:

FM Approved Wood Deck - All rotted or deteriorated wood shall be removed and replaced. The deck thickness shall be 2 inch minimum lumber or ¾ inch plywood. The deck shall conform to FM's requirements for Class 1 wood decks. Deck attachment shall conform to FM and local code requirements. Fastener heads shall be recessed into the wood surface.

Non-FM Approved Wood Deck - All rotted or deteriorated wood shall be removed and replaced. The deck thickness shall be 1-1/2 inch lumber or 15/32 plywood or match existing deck if greater. Deck type and attachment shall conform to local code requirements. Fastener heads shall be recessed into the wood surface.

3.3 SUBSTRATE INSPECTION

A. A dry, clean and smooth substrate shall be prepared to receive the PVC roof system.

B. The Applicator shall inspect the substrate for defects such as excessive surface roughness, contamination, structural inadequacy, or any other condition that will adversely affect the quality of work.

C. The substrate shall be clean, smooth, dry, free of flaws, sharp edges, loose and foreign material, oil and grease. Roofing shall not start until all defects have been corrected.

D. All roof surfaces shall be free of moisture.

E. Roofing membrane shall be applied over compatible and accepted substrates only.

3.4 VAPOR / AIR BARRIER

General Criteria:

Interior (inside temperature/relative humidity) and exterior conditions may create a need for a vapor barrier. The design professional shall decide whether a vapor barrier is necessary. It is the design professional's responsibility to determine the type and location of a vapor barrier. If sealed properly, a vapor barrier can also act as an air barrier (positive pressure) for roofs intended over air-permeable decks (steel, wood, precast, etc.). When reroofing over the existing asphalt roof, the old roof may be considered to be an adequate vapor barrier/air barrier if the details are properly sealed.

A. Sarnavap-10

1. Wood Deck - Upper Deck:

   Sarnavap-10 is loose-laid over suitable substrate. Overlap all edges 4 inches and seal with butyl tape. Extend Sarnavap-10 to perimeter and deck penetrations and seal to provide continuity of the building's air/vapor envelope. Sarnavap-10 must be sealed on the vertical surface at roof penetrations also.

2. Primer Application

   The substrate must be clean, dry and free of dust, grease or other contaminants. Shake well before using. Apply to clean and dry surfaces with a paint brush, roller or sprayer. Application rates will vary depending on substrate. Sarnavap Self-Adhered vapor barrier must be installed on the same day as the primer application. Acceptable substrates for primer application include concrete, lightweight concrete, and gypsum boards. Drying time is typically 30 minutes to 3 hours.

3. Membrane Application Over Concrete Deck - Lower Decks:

   Install Sarnavap Self-Adhered over a clean and dry substrate. In concrete deck applications concrete must be fully dry. Do not install when it is raining, snowing, or on wet/humid surfaces. Install in temperatures 14°F and above. The use of a primer is required on the following substrates: wood, concrete, lightweight concrete, gypsum boards and decks.

   a) Begin application at the bottom of the slope. Unroll Sarnavap Self-Adhered onto the substrate without adhering for alignment. Overlap each preceding sheet by 3inches lengthwise following the reference line and by 6 inches at each end. Stagger end laps by at least 12 inches. Do not immediately remove the silicone release sheet.

   b) Once aligned, peel back a portion of the silicone release sheet and press the membrane onto the substrate for initial adherence. Hold Sarnavap Self-Adhered tight and peel back the release sheet by pulling diagonally.

   Use a minimum 100 lb steel, membrane roller, by rolling in two directions to press Sarnavap Self-Adhered down into the substrate including the laps. Finish by aligning the edge of the roller with the lower end of the side laps and rolling up the membrane. Do not cut the membrane to remove air bubbles trapped under the laps. Squeeze out air bubbles by pushing the roller to the edge of the laps.

3.5 PROTECTION AND INSULATION BOARD INSTALLATION

A. Protection and insulation board shall be installed according to manufacturer's instructions.

B. Protection and insulation board shall be neatly cut to fit around penetrations and projections.

C. Do not install more protection and insulation board than can be covered with membrane by the end of the day or the onset of inclement weather.

D. Mechanical Attachment

1. Insulation shall be mechanically fastened to the deck with approved fasteners and plates at a rate according to the insulation manufacturer's and Sika Sarnafil's recommendations for fastening rates and patterns. The quantity and locations of the fasteners and plates shall also cause the insulation boards to rest evenly on the roof deck/substrate so that there are no significant and avoidable air spaces between the boards and the substrate. Each insulation board shall be installed tightly against the adjacent boards on all sides.

2. Fasteners are to be installed consistently in accordance with fastener manufacturer's recommendations. Fasteners are to have minimum penetration into structural deck recommended by the fastener manufacturer and Sika Sarnafil.

E. Adhered Attachment

1. With a utility knife, cut away the plastic plugs from the two component low rise foam cartridge mixing head. Attach a mixing tip to the threaded mixing head. Place the cartridge into the applicator. At the beginning of the tube, some of the material should be pumped out initially to make sure of a proper mix. Apply using a gravity fed applicator or by hand with a dual component caulk gun over properly installed and prepared substrates in bands 12 in. o.c. Bands are 1/4-1/2 in. wide before foaming. Adhesive will quickly, within 30-45 seconds at 60-80°F, transform from a liquid into a low rise foam. Immediately set protection/insulation boards into wet adhesive. Do not allow the adhesive to skin over. Walk protection/insulation boards into place to ensure full embedment. Within 5-15 minutes the boards are securely attached to the substrate. In warmer weather this process is a little quicker. In colder weather the process is a little slower. CAUTION: Walking protection/insulation boards in immediately after placement into adhesive may cause slippage/movement until adhesive starts to set up. On roof slopes greater than 1/2 inch in 12 inches, begin adhering protection/insulation boards at low point and work upward to avoid slippage. One person should be designated to walk in, trim/slit and apply weight to all boards to ensure adequate securement. Only areas that can be made completely watertight in the same day's operations shall be coated. Un-used adhesive can be applied at a later date by simply replacing the mixing tip.

2. Installation Guidelines:

a) For ease of application, maintain a minimum material temperature of 70°F prior to use.

b) Store between 60°F and 80°F.

c) Adhesive shall not be used during inclement weather.

d) Adhesive shall not be applied to wet or damp surfaces.

e) Do not use warped or curled boards.

f) For uneven surfaces, trimming or slitting of boards may be necessary.

g) Approximate Set-Time:Air Temperature between 60-90°F = 5-8 minutes.

Air Temperature between 32-60°F = 8-15 minutes.

3. Coverage: Approximately 550 sq. ft. per case. Rates are based on an application pattern of 4 ribbons, 1/4-1/2 in. beads, 12 in. o.c. per 4 x 4 ft. board. Coverage rates may vary over irregular surfaces.

3.6 INSTALLATION OF MEMBRANE

A. The surface of the substrate shall be inspected prior to installation of the PVC roof membrane. The substrate shall be clean, dry, free from debris and smooth with no surface roughness or contamination. Broken, delaminated, wet or damaged protection boards shall be removed and replaced.

B. Water Based Membrane Adhesive:

1. Over the properly installed and prepared substrate, adhesive shall be poured out of the pail and spread using a medium nap roller. . The membrane adhesive shall be applied at a rate according to Manufacturer's requirements. No adhesive is applied to the back of the PVC membrane. Do not allow adhesive to skin-over or surface-dry prior to installation of PVC membrane.

2. The PVC roof membrane is unrolled immediately into the wet water based membrane adhesive. Adjacent rolls overlap previous rolls by 3 inches. This process is repeated throughout the roof area. Immediately after application into adhesive, each roll shall be pressed firmly into place with a water-filled, foam-covered lawn roller by frequent rolling in two directions. Do not allow adhesive to skin-over or surface-dry prior to installation of PVC membrane.

Notes:

a) Sarnacol 2121 shall not be used if temperatures below 40º F are expected during application or subsequent drying time.

b) No adhesive shall be applied in seam areas. All membrane shall be applied in the same manner.
Membrane adhesive shall not be used on vertical surfaces or sloped surfaces greater than a 2 inch rise per 1 horizontal foot.

3.7 HOT-AIR WELDING OF SEAM OVERLAPS

A. General

1. All seams shall be hot-air welded. Seam overlaps should be 3 inches wide

when automatic machine-welding and 4 inches wide when hand-welding, except for certain details.

2. Welding equipment shall be provided by or approved by the membrane manufacturer. All mechanics intending to use the equipment shall have successfully completed a training course provided bythe membrane manufacturer’s Technical Representative prior to welding.

3. All membrane to be welded shall be clean and dry.

B. Hand-Welding

1. Hand-welded seams shall be completed in two stages. Hot-air welding equipment shall be allowed to warm up for at least one minute prior to welding.

2. The back edge of the seam shall be welded with a narrow but continuous weld to prevent loss of hot air during the final welding.

3 The nozzle shall be inserted into the seam at a 45 degree angle to the edge of the membrane. Once the proper welding temperature has been reached and the membrane begins to "flow," the hand roller is positioned perpendicular to the nozzle and rolled lightly. For straight seams, the 1-1/2 inch wide nozzle is recommended for use. For corners and compound connections, the 3/4 inch wide nozzle shall be used.

C. Machine Welding

1. Machine welded seams are achieved by the use of the membrane manufacturer’s automatic welding equipment. When using this equipment, Manufacturer's instructions shall be followed and local codes for electric supply, grounding and over current protection observed. Dedicated circuit house power or a dedicated portable generator is recommended. No other equipment shall be operated simultaneously off the generator.

2. Metal tracks may be used over the deck membrane and under the machine welder to minimize or eliminate wrinkles.

D. Quality Control of Welded Seams

1. The Applicator shall check all welded seams for continuity using a rounded screwdriver. Visible evidence that welding is proceeding correctly is smoke during the welding operation, shiny membrane surfaces, and an uninterrupted flow of dark grey material from the underside of the top membrane. On-site evaluation of welded seams shall be made daily by the Applicator at locations as directed by the Owner's Representative orthe membrane manufacturer’s representative. One inch wide cross-section samples of welded seams shall be taken at least two times a day. Correct welds display

failure from shearing of the membrane prior to separation of the weld. Each test cut shall be patched by the Applicator at no extra cost to the Owner.

3.8 MEMBRANE FLASHINGS

All flashings shall be installed concurrently with the roof membrane as the job progresses. No temporary flashings shall be allowed without the prior written approval of the Owner's Representative and the membrane manufacturer. If any water is allowed to enter under the newly completed roofing, the affected area shall be removed and replaced at the Applicator's expense. Flashing shall be adhered to compatible, dry, smooth, and solvent-resistant surfaces. Use caution to ensure adhesive fumes are not drawn into the building.

A. VOC Compliant Flashing Adhesive

1. Over the properly installed and prepared flashing substrate, the flashing adhesive shall be applied according to instructions found on the Product Data Sheet. The flashing adhesive shall be applied in smooth, even coats with no gaps, globs or similar inconsistencies. Only an area which can be completely covered in the same day's operations shall be flashed. The bonded sheet shall be pressed firmly in place with a hand roller.

2. No adhesive shall be applied in seam areas that are to be welded. All panels of membrane shall be applied in the same manner, overlapping the edges of the panels as required by welding techniques.

B. Install peel stop according to the Detail Drawings with approved fasteners into the structural deck at the base of parapets, walls and curbs. Peel stop is required by the membrane manufacturer at the base of all tapered edge strips and at transitions, peaks, and valleys according to the Manufacturer's details.

C. The Manufacturer's requirements and recommendations and the specifications shall be followed. All material submittals shall have been accepted by the membrane manufacturer prior to installation.

D. All flashings shall extend a minimum of 8 inches above roofing level unless otherwise accepted in writing by the Owner's Representative and the membrane manufacturer’s Technical Department.

E. All flashing membranes shall be consistently adhered to substrates. All interior and exterior corners and miters shall be cut and hot-air welded into place. No bitumen shall be in contact with the PVC membrane.

F. All flashing membranes shall be mechanically fastened along the counter-flashed top edge with Peel stop at 6-8 inches on center.

G. Membrane flashings shall be terminated according to the membrane manufacturer’s recommended details.

3.9 METAL FLASHINGS

A. Metal details, fabrication practices and installation methods shall conform to the applicable requirements of the following:

1. Factory Mutual Loss Prevention Data Sheet 1-49 (latest issue).
2. Sheet Metal and Air Conditioning Contractors National Association, Inc. (SMACNA) - latest issue.

B. Metal, other than that provided by the membrane manufacturer, is not covered under the Manufacturer's warranty.

C. Complete all metal work in conjunction with roofing and flashings so that a watertight condition exists daily.

D. Metal shall be installed to provide adequate resistance to bending to allow for normal thermal expansion and contraction.

E. Metal joints shall be watertight.

F. Metal flashings shall be securely fastened into solid wood blocking. Fasteners shall penetrate the wood nailer a minimum of 1 inch.

G. Airtight and continuous metal hook strips are required behind metal fascias. Hook strips are to be fastened 12 inches on center into the wood nailer or masonry wall.

H. Counter flashings shall overlap base flashings at least 4 inches.

I. Hook strips shall extend past wood nailers over wall surfaces by 1-1/2 inch minimum and shall be securely sealed from air entry.

3.10 WALKWAY INSTALLATION

A. PVC Walk tread

Roofing membrane to receive PVC walk tread shall be clean and dry. Place chalk lines on deck sheet to indicate location of walk tread. Apply a continuous coat of VOC Compliant flashing adhesive to the deck sheet and the back of walk tread in accordance with the membrane manufacturer's technical requirements and press walk tread into place with a water-filled, foam-covered lawn roller. Clean the deck membrane in areas to be welded. Hot-air weld the entire perimeter of the walk tread to the PVC deck sheet. Check all welds with a rounded screwdriver. Re-weld any inconsistencies. Important: Check all existing deck membrane seams that are to be covered by walk tread with rounded screwdriver and reweld any inconsistencies before walk tread installation.

3.11 TEMPORARY CUT-OFF

All flashings shall be installed concurrently with the roof membrane in order to maintain a watertight condition as the work progresses. All temporary waterstops shall be constructed to provide a 100% watertight seal. The new membrane shall be carried into the waterstop. The waterstop shall be sealed to the deck and/or substrate so that water will not be allowed to travel under the new or existing roofing. The edge of the membrane shall be sealed in a

continuous heavy application of sealant as described in Section 2.08. When work resumes, the contaminated membrane shall be cut out. All sealant, contaminated membrane, fillers, etc. shall be removed from the work area and properly disposed of off site. None of these materials shall be used in the new work.

If inclement weather occurs while a temporary waterstop is in place, the Applicator shall provide the labor necessary to monitor the situation to maintain a watertight condition.

If any water is allowed to enter under the newly-completed roofing, the affected area shall be removed and replaced at the Applicator's expense.

3.12 COMPLETION

Prior to demobilization from the site, the work shall be reviewed as part of a POST-CONSTRUCTION Conference per 1.2 Item B above. All defects noted and non-compliances with the Specifications or the recommendations of the Manufacturer shall be itemized in a punch list. These items must be corrected immediately by the Applicator to the satisfaction of the Inspector and membrane manufacturer prior to demobilization.

All Warranties referenced in this Specification shall have been submitted and have been accepted at time of contract award.

END OF SECTION 07 54 00

SECTION 07 62 00 - SHEET METAL

PART 1 - GENERAL

1.1 RELATED DOCUMENTS AND DESCRIPTION OF WORK:

The work includes the furnishing and installing of all flashing and sheet metal work for the building complete, including reglets and counterflashings as shown and noted on the drawings and specified herein. The Conditions of the Contract and Division 1 apply to this section as fully as if repeated herein.

1.2 REFERENCES AND STANDARDS:

Sheet metal and copper work shall be fabricated and installed in accordance with the "Architectural Sheet Metal Manual", most current edition, of the Sheet Metal and Air Conditioning Contractors National Association, Inc. (SMACNA), unless detailed otherwise. Materials shall be in accordance with the specifications and standards of the American Society for Testing and Materials (ASTM) as hereinafter referred to.

1.3 SUBMITTALS:

1.3.1 Shop Drawings: Submit fully detailed shop drawings of all fabricated items, including all gutters, downspouts, scuppers, reglets and counterflashings for review. No fabrication of sheet metal shall be commenced until the shop drawings have been reviewed and returned to the Contractor.

1.3.2 See Section 013300 for number and manner of submittals.

1.4 DELIVERY, STORAGE AND HANDLING:

Do not expose sheet metal to excessive moisture, humidity or other conditions that would cause corrosion or wet storage stains. Protect surfaces, edges and ends from damage due to physical abuse.

1.5 COORDINATION:

Coordinate the work of this section with the roofing work and the work of other trades whose work requires flashing. Consult with others and expedite and coordinate the labor and materials involved.

1.6 Pre-Installation Meeting:

1.6.1 Prior to commencing the work of this section, the contractor shall schedule and attend a meeting at the job site to discuss conformance with requirements of the Contract Documents. Request attendance of representatives from the Resident Engineer and the Architect, Contractor, subcontractors (applicable if flashing, sealant and expansion joint contractor are contracted separately from the waterproofing contract), and other parties who are involved.

PART 2 - PRODUCTS

2.1 MATERIALS:

2.1.1a Galvanized Sheet Metal: Galvanized iron or steel sheet, conforming to ASTM A 525-83 or A 446-76, as required, with minimum zinc coating of 2 oz./sq.ft. and 0.2% copper bearing. Sheet metal shall be 24 gauged galvanized iron unless otherwise noted from a stand brand such as Armco, Toncan or prior approved equal.

2.1.1.b Copper: See Section 07 71 05.

2.1.2 Solder: Solder for sheet metal shall be Grade A conforming to ASTM B 32-83. Remelted or reworked solder shall not be used.

2.1.3 Flux: Flux shall be muriatic acid killed with zinc or an approved brand of soldering flux. Flux shall be thoroughly washed off after soldering is completed and shall not be injurious to metal surfaces.

2.1.4 Butyl Sealer: Where it is impracticable to use a solder at joints or corners, seal with one of the following butyl sealants (per SMACNA manual), or approved equal.

Adco Seal No. B-100
PTI Sealants No. 707; Protective Treatments, Inc.
Tremco Butyl Sealant; Tremco, Inc.

2.1.5 Fasteners: Fasteners shall be the same metal or a metal compatible with the items it contacts. Stainless steel fasteners shall be used to fasten dissimilar materials. Provide compatible washers where required to protect surface of sheet metals and to provide a watertight connection.

2.1.6 Nails, Rivets, and Fastenings: Nails shall be case-hardened concrete nails over concrete and roofing nails over wood, of required lengths. Where sheet metal is built in over roofing materials or other sheet metal, use nails with 1" tinned discs. Rivets shall be tinned soft iron rivets. Sheet metal screws shall be Parker Kalon type, or equal, of proper size and material to suit conditions. Where wood nailers are provided, use galvanized or stainless steel wood screws as applicable.

2.1.7 Reglet and Counterflashing Assembly: by Fry Reglet Corp. The assembly shall be made of 24 gauge galvanized steel.

2.1.7.1 Flashing at masonry walls shall be Fry type MA or Keystone.

2.1.7.2 Flashing at stud/plaster walls shall be Fry type ST.

2.1.7.3 Flashing at masonry/plaster walls shall be Fry Type SM.

2.1.8 Base Covers Roof Mounted Equipment: Shall be 20 gauge galvanized steel.

2.1.9 Scuppers and Scupper Box: Shall be 20 gauge galvanized steel unless otherwise

noted on drawings. Flashing at scuppers shall be galvanized iron (paint-lock).

2.1.10 Plaster Stops: Which capture and terminate waterproofing at lower/bottom end of wall or soffit shall have weep holes to allow water to escape preventing puddle or stain marks on plaster (see section 09 24 00).

2.1.11 Gravel Stops: shall be of 20 gauge galvanized steel.

2.1.12 Parapet Caps/Copings: shall be of 20 gauge galvanized steel. For copper: See Section 07 71 05.

2.1.13 Leaders, Downspouts and Gutters: shall be of 22 gauge galvanized steel. For copper: See Section 07 71 05.

PART 3 - EXECUTION

3.1 FIELD MEASUREMENTS AND TEMPLATES:

Secure field measurements required for proper and adequate fabrication and installation of the work. Exact measurements are the Contractor's responsibility.

3.2 FABRICATION AND INSTALLATION:

3.2.1 General: Surfaces against which sheet metal is to be placed shall be clean, smooth and free from defects. All surfaces shall be inspected and corrected before starting work. Sheet metal work related to roofing work shall be coordinated with the roofing work. Flanges of sheet metal items shall be installed on top of last roofing ply in full bed of asphaltic plastic cement 1/8" thick.

3.2.2 Workmanship: Sheet metal shall be finished straight and true, with miters and joints accurately fitted. Exposed work shall be free of dents. Corners shall be reinforced and seams made waterproof. Ample provisions shall be made for expansion and contraction in sheet metal assemblies.

3.2.3 Soldering: Edges of sheet metal shall be pretinned before soldering is begun. Soldering shall be done slowly with heavy, well heated, properly tinned coppers, to heat thoroughly the seam and completely sweat the solder through the full width of the seam. Ample solder shall be used and the seam shall show not less than one full inch of evenly flowed solder. Soldering shall follow immediately after application of flux. Upon completion of soldering, acid shall be neutralized and surfaces shall be thoroughly cleaned. Clean work of all excess putty, caulking compounds, stain grease which has been caused by work under this Section**. Care shall be taken to leave exposed copper connections free of exposed solder or sealants**. All sheet metal or copper work occurring at built-up roof, i.e., parapets, vents, drains, penetrations, flashing shall be soldered. All sheet metal or copper work occurring at metal roof, i.e., vents, penetrations, fascia, and flashing shall be as recommended by metal roof panel manufacturer.

3.2.4 Gravel Stops: Provide prefabricated mitered and soldered internal and external corners. Joints between sections shall be left open 1/4" and backed with formed back-up plates lapping each section end a minimum of 3". Seal laps with butyl sealer.

Exposed edges of gravel stops shall be folded back 1/2" on the underside. Place gravel stops on roofs after all roofing felts have been laid. Place in position on a 1/8" thick bed of black plastic cement the full width of the flange and nailed not to exceed 12" on centers.

3.2.5 Parapet Caps: Provide prefabricated mitered internal and external corners. Joints between sections shall have hooked seam per SMACNA. Seal laps with sealer.

3.2.6 Edge Strips: Fabricate strips of galvanized steel of the same thickness as metal to be fastened. Secure edge strips in place at not more than 6" on centers.

3.2.7 Reglets and Counterflashings: Reglets and counterflashings shall be installed in accordance with the manufacturer's printed installation drawings and instructions and as otherwise detailed on the drawings.

3.2.8 Gutters: The hung type of shape indicated and supported on underside by brackets that permit free thermal movement of the gutter. Provide gutters in sizes indicated, complete with mitered corners, end caps, outlets, brackets, and other accessories from the same material as the gutter necessary for installation. Bead or reinforce the outer edge of gutter with a stiffening bar not less than 3/4 by 3/16 inch of material compatible with gutter. Fabricate gutters in sections not less than eight feet long. Lap the sections a minimum of one inch in the direction of flow or provide with concealed splice plate six inches minimum. Join the gutters, other than aluminum and copper, by riveted and soldered joints. Copper gutters shall be joined by soldered or sealed joints. Aluminum gutters shall be joined with riveted sealed joints. Provide expansion-type slip joints midway between outlets. Support gutters on adjustable hangers spaced not more than 30 inches on centers or as recommended by the manufacturer. Adjust gutters to slope uniformly to outlets, with high points occurring midway between outlets. Fabricate hangers and fastenings from metals compatible with the gutters. Install gutters, downspout, accessories as directed by the by the Resident Engineer, Architect, and manufacturer's literature.

3.2.9 Leaders and Downspouts: Types, shapes, and sizes indicated. Provide end joints to telescope not less than 1/2 inch and lock longitudinal joints. Provide gutter outlets with wire ball strainers for each outlet. Provide strainers to fit tightly into outlets and be of the same material used for gutters. Keep downspouts not less than one inch away from walls. Fasten to the walls at top, bottom, and at an intermediate point not to exceed five feet on centers with leader straps or concealed rack-and-pin type fasteners. Form straps and fasteners of metal compatible with the downspouts.

3.2.9.1 Terminations: Neatly fit into the drainage connection the downspouts terminating in drainage lines and fill the joints with a Portland Cement mortar cap sloped away from the downspout.

3.2.9.2 Miscellaneous Flashings and Metal Trim: Miscellaneous flashings, metal trim, and their related components are not necessarily individually described. Miscellaneous items and trim not mentioned or described shall be furnished and installed (soldered) in accordance with the intent of the drawings, specifications, and SMACNA as required to complete the work.

3.2.9.3 Scuppers will be fabricated and installed as shown on pages 54-55 of Sheet Metal and Air Conditioning Contractors National Association Inc. June 1972

Edition. (Provide Paint-Lock Material) See architectural drawings for modifications.

3.3 SHOP PAINTING:

Sheet metal surfaces which will be concealed in the finished work shall be treated with an approved acid wash and then shop painted with one coat of an approved galvanized primer such as zinc dust-zinc oxide primer. Sheet metal surfaces which will be exposed in the finished work are specified to be treated and prime-painted under Section 09 91 00.

END OF SECTION 07 62 00

SECTION 07 71 05 – COPPER FLASHING AND TRIM

PART 1 GENERAL

1.1 RELATED DOCUMENTS

A. Drawings and general provisions of Contract, including General and Supplementary Conditions and Division-1 Specification Sections, apply to work of this Section.

1.2 SUMMARY

A. This Section includes shop and field formed copper roofing accessories and trim, such as:

1. Counterflashing and base flashing.
2. Wall flashing and expansion joints.
3. Expansion Joints
4. Built-in valleys, gutters, and scuppers.
5. Gutters and downspouts (rain drainage).
6. Exposed trim/fascia units.
7. Miscellaneous accessories.

B. Integral masonry flashings are specified as masonry work in sections of Division-4.

C. Roofing accessories installed integral with roofing membrane are specified in roofing system sections as roofing work.

D. Roof accessory units of premanufactured, set-on type are specified elsewhere.

E. Sealants are generally specified in Division-7 Section, "Sealants."

F. Coordinate installation with mechanical equipment specified in Division23..

1.3 SUBMITTALS

A. General: Submit the following in accordance with Conditions of Contract and Division-1 Specification Sections.

B. Product data for flashing, metal, gutters, and accessories: Manufacturer's technical product data, installation instructions and general recommendations for each specified sheet material and fabricated product.

C. Samples of the following flashing, sheet metal, gutter, and accessory items:

1. 6 or 12-inch-square samples of specified sheet materials to be exposed as finished surfaces.
2. 6 or 12-inch-long samples of fabricated products exposed as finished work. Provide complete with specified finish.
3. 6 or 12-inch long assemblies of coordinated trim, expansion joint or similar functional units.

D. Shop drawings showing layout, profiles, methods of joining, and anchorage details, including major counterflashings, trim/fascia units, gutters, downspouts, scuppers, and expansion joint systems. Provide layouts at 1/4-inch scale and details at 3-inch scale.

1.4 PROJECT CONDITIONS

A. Coordinate work of this section with interfacing and adjoining work for proper sequencing of each installation. Ensure best possible weather resistance and durability of work and protection of materials and finishes.

1.5 Pre-Installation Meeting:

1.5.1 Prior to commencing the work of this section, the contractor shall schedule and attend a meeting at the job site to discuss conformance with requirements of the Contract Documents. Request attendance of representatives from the Resident Engineer and the Architect, Contractor, subcontractors (applicable if flashing, sealant and expansion joint contractor are contracted separately from the waterproofing contract), and other parties who are involved.

PART 2 - PRODUCTS

2.1 FLASHING AND TRIM MATERIALS

A. Copper: ASTM B 370; temper H00 (cold-rolled) except where temper 060 is required for forming;

Typical 20 oz. (0.0270mm) except as otherwise indicated.

Fascia Panels : 32 oz. (0.0431mm) copper.

Parapet Caps/Copings : 24 oz. (0.0323) copper

2.2 FABRICATED UNITS

A. General Metal Fabrication: Shop-fabricate work to greatest extent possible. Comply with details shown and with applicable requirements of Copper Development Association (CDA) "Copper in Architecture Handbook" and other recognized industry practices. Fabricate for waterproof and weather-resistant performance, with expansion provisions for running work, sufficient to permanently prevent leakage, damage, or deterioration of the work. Form work to fit substrates. Comply with material manufacturer instructions and recommendations for forming material. Form exposed copper work without excessive oil-canning, buckling, and tool marks, true to line and levels indicated, with exposed edges folded back to form hems.

B. Seams: Fabricate nonmoving seams with flat-lock seams. Tin edges to be seamed, form seams, and solder. Rivet joints for additional strength where required.

C. Expansion Provisions: Where lapped or bayonet-type expansion provisions in work cannot be used or would not be sufficiently water/weatherproof, form expansion joints of intermeshing hooked flanges, not less than 1 inch deep, filled with mastic sealant (concealed within joints).

D. Sealant Joints: Where movable, nonexpansion type joints are indicated or required for proper performance of work, form metal to provide for proper installation of elastomeric sealant, in compliance with CDA standards.

E. Separations: Provide for separation of metal from noncompatible metal or corrosive substrates by coating concealed surfaces at locations of contact, with bituminous coating or other permanent separation as recommended by manufacturer/fabricator.

2.3 ELASTIC EXPANSION JOINTS

A. General: Provide units of size and profile indicated, complete with corner units, intersection units, and splicing materials. Provide complete with elastic sheet flashing forming the primary joint membrane, in a supported, "bellows" arrangement designed for securement to both sides of expansion joints. Underside of bellows insulated with adhesively applied, flexible, closed-cell rubber or plastic not less than 3/8-inch thick.

B. Type: Copper flanged edges, 3 to 4 inches wide, formed to profiles as indicated to fit curbs and designed for nailing to curb substrate. Provide 16 oz. metal flanges.

C. Looped Bellows Width: 5 to 6 inches, exclusive of flanges.

PART 3 EXECUTION

3.1 INSTALLATION REQUIREMENTS

A. General: Except as otherwise indicated, comply with manufacturer's installation instructions and recommendations and with CDA "Copper in Architecture Handbook". Anchor units of work securely in place by methods indicated, providing for thermal expansion of units; conceal fasteners where possible, and set units true to line and level as indicated. Install work with laps, joints, and seams that will be permanently watertight and weatherproof.

B. Underlayment: Where installation is to be directly on cementitious or wood substrates, install a slip sheet of red rosin paper on a course of asphalt saturated felt.

C. Bed flanges of work in a thick coat of bituminous roofing cement where required for waterproof performance.

D. Install reglets to receive counterflashing in manner and by methods indicated. Where shown in concrete, furnish reglets to trades of concrete work for installation as work of Division-3 sections. Where shown in masonry, furnish reglets to trades of masonry work, for installation as work of Division-4 sections.

E. Install counterflashing in reglets, either by snap-in seal arrangement or by soldering in place for anchorage and filling reglet with mastic or elastomeric sealant, as indicated and depending on degree of sealant exposure.

F. Install elastic flashing in accordance with manufacturer's recommendations. Where required, provide for movement at joints by forming loops or bellows in width of flashing. Locate cover or filler strips at joints to facilitate complete drainage of water from flashing. Seam adjacent flashing sheets with adhesive, seal and anchor edges in accordance with manufacturer's recommendations.

G. Nail flanges of expansion joint units to curb nailers, at maximum spacing of 6 inches O.C. Fabricate seams at joints between units with minimum 3-inch overlap, to form a continuous, waterproof system.

1. Install expansion joints at middle of expansion range.

H. Install continuous gutter guards on gutters, arranged as hinged units to swing open for cleaning gutters. Install "beehive"-type strainer-guard at conductor heads, removable for cleaning downspouts.

3.2 CLEANING AND PROTECTION

A. Clean exposed copper surfaces, removing substances that might cause discoloration of metal.

B. Protection: Advise Contractor of required procedures for surveillance and protection of flashings and sheet metal work during construction to ensure that work will be without damage or deterioration other than natural weathering at time of Substantial Completion.

END OF SECTION 07 71 05

SECTION 07 72 00 - ROOF ACCESSORIES

PART 1 - GENERAL

1.1 RELATED DOCUMENTS AND DESCRIPTION OF WORK:

The work includes the furnishing, delivery and installing of roof accessories complete as indicated on drawings and as specified. The Conditions of Contract and Division 1 apply to this section as fully as if repeated herein.

1.2 STANDARDS:

Comply with SMACNA "Architectural Sheet Metal Manual" details for fabrication of units, including flanges and cap-flashing to coordinate with type of roofing indicated. Comply with "NRCA Roofing and Waterproofing Manual" details for installation of units.

1.3 SUBMITTAL:

1.3.1 Submittal procedures and quantities are as specified in Section 01 33 00.

1.3.2 Product Data: Submit manufacturer's product data and installation instructions.

1.3.3 Shop Drawings: Submit fully detailed shop drawings showing size, location and details of roof accessories.

PART 2 - PRODUCTS

2.1 MATERIALS:

2.1.1 Sheet Metal: Except as otherwise indicated, 20-gauge, copper-bearing zinc-coated steel, ASTM A526, G90 hot-dip galvanized, mill phosphatized.

2.1.2 Fasteners: Match metal and finish of metal work, or provide non-magnetic stainless steel, unless another type fastener is recommended by manufacturer of accessory unit.

2.1.3 Roofing Cement: FS SS-C-153, type which is compatible with roofing, and nominally free of sulfur.

2.1.4 Bituminous Coating: 15 mil bituminous mastic coating, FS TT-C-494 or SSPC-Paint 12, nominally free of sulfur.

2.1.5 Mastic Sealant: Manville MBR Flashing Cement.

2.2 PREFABRICATED ROOF SCUTTLE & SAFETY POST:

2.2.1 Prefabricated roof scuttle shall be Type "S-90" roof scuttle with self curb as manufactured by The Bilco Company. 36” x 30” Size shall be as shown on drawings. Type 304 Stainless Steel cover and frame with Type 316 SS Hardware.

2.2.2 Ladder Safety post shall be "Model l LadderUp Safety Post" as manufactured by The Bilco Company. Device shall be manufactured of high strength steel with telescoping tubular section that locks automatically when fully extended. Upward and downward movement shall be controlled by a stainless steel spring balancing mechanism. Finish shall be black enamel. Unit shall be completely assembled with fasteners for securing to the ladder rungs. Device shall be manufactured of high strength steel with telescoping tubular section that locks automatically when fully extended. Upward and downward movement shall be controlled by a stainless steel spring balancing mechanism. Finish shall be black enamel. Unit shall be completely assembled with fasteners for securing to the ladder rungs.

2.3 SKYLIGHT SYSTEM: NOT USED.

2.4 ROOF WALKWAYS: UNDER SEPARATE SECTION

PART 3 - EXECUTION

3.1 INSTALLATION:

3.1.1 Seal waterproof expansion joints between roof accessory units with concealed pockets of mastic sealant.

3.1.2 Where flanges and base of units set directly on roof or deck construction, set in a bed of roofing cement or mastic sealant.

3.1.3 Anchor units securely to supporting structure, except for small accessory items which are bedded and stripped into roofing for support.

3.1.4 Install prefabricated roof scuttle and safety post in accordance with manufacturer's instructions.

3.1.5 Coordinate installation with deck construction, roofing and flashing work, to provide waterproof and weatherproof installations, in accordance with Construction Details of NRCA Roofing and Waterproofing Manual.

3.1.6 Separate dissimilar metals by coating surfaces with bituminous coating or other permanent separation.

END OF SECTION 07 72 00

SECTION 07 92 00 - JOINT SEALERS

PART 1 - GENERAL

1.1 Related Documents:

Drawings and general provisions of Contract, including General and Supplementary Conditions and Division-1 Specification sections, apply to work of this section.

1.2 Description of Work:

1.2.1 The work includes the furnishing and installing of all sealant work, except glazing sealants, required to weatherproof the structure, including interior sealant work, as shown and noted on the drawings and as specified. Sealants for glazing work are specified in Section 08800. Sealants for tile work are specified in Section 09300. Sealant for preformed roof and wall panels are specified in Section 07 71 05 .

1.2.2 This section contains requirements pertaining to all weather sealing and caulking throughout the project and becomes a part of each and every section calling for caulking and sealing, unless otherwise specified, as though written in full in each section.

1.3 System Performances:

Provide joints sealers that have been produced and installed to establish and maintain watertight and airtight continuous seals.

1.4 Quality Assurance:

1.4.1 Installer Qualifications: Engage an Installer who has, within the last 3 years, successfully completed at least 3 joint sealer applications similar in type and size to that of this project and who will assign mechanics from these earlier applications to this project, of which one will serve as lead mechanic.

1.4.2 Single Source Responsibility for Joint Sealer Materials: Obtain joint sealer materials from a single manufacturer for each different product required.

1.5 Submittals:

1.5.1 Submittal procedures and quantities as specified in Section 01 33 00.

1.5.2 Product Data: Submit manufacturer's technical data for each joint sealer product required, including instructions for joint preparation and joint sealer application.

1.5.3 Samples for Initial Selection Purposes: Submit manufacturer's bead samples consisting of strips of actual products showing full range of colors available, including special colors provided by manufacturer for each product exposed to view.

1.5.4 Samples for Verification Purposes: Submit samples of each type and color of joint sealer required. Install joint sealer samples in 1/2" wide joints formed between two 6"

long strips of material matching the appearance of exposed surfaces adjacent to joint sealers in the work. The workmanship, bond and color of sealant work throughout the project shall match that of the approved sample.

1.5.5 Certificates: Submit certificates from manufacturers of joint sealers attesting that their products comply with specification requirements and are suitable for the use indicated.

1.6 Delivery, Storage, and Handling:

1.6.1 Deliver materials to project site in original unopened containers or bundles with labels informing about manufacturer, product name and designation, color, expiration period for use, pot life, curing time and mixing instructions for multicomponent materials.

1.6.2 Store and handle materials to prevent their deterioration or damage due to moisture, contaminants or other causes. Store sealants in an area where they will not be subject to temperatures above 100 degrees fahrenheit. Do not store materials that have exceeded the manufacturer's recommended shelf life.

1.7 Project Conditions:

1.7.1 Do not proceed with installation of joint sealers when ambient and substrate temperature conditions are outside the limits permitted by joint sealer manufacturers, or when joint substrates are wet due to rain, fog, frost, condensation or other causes.

1.7.2 Do not proceed with installation of joint sealers when joint widths are less than allowed by joint sealer manufacturer for application indicated.

1.8 Warranty:

In addition to the warranty and correction of work requirements of the General Conditions, work under this section shall be warranteed against moisture penetration for a **period of 5 years** from the date of "Substantial Completion". The written warranty shall include materials and labor required to repair leaks that develop. The warranty shall be signed by the sealant manufacturer, the sealant installer and the Contractor and shall be submitted. .

PART 2 - PRODUCTS

2.1 Materials:

Products shall conform to the reference documents listed for each use. Color of sealant and caulking shall match adjacent surface color, unless specified otherwise. In concealed installation, use standard gray or black sealant. For ASTM C 920 sealants, use a sealant that has been tested on the type(s) of substrate to which it will be applied.

2.1.1 Silicone Rubber One Component – (SLNT-1) Dow Corning 795 silicone construction sealant.

2.1.2 Self-Level Polyurethane Two-Part (SLNT-2): Two-part self-leveling polyurethane

sealant, Sonneborn SL-2 Paving JT sealant or prior approved equal.

2.1.3 Urethane Sealant (SLNT-3): One-part polyurethane sealant, Vulkem 116 or prior approved equal.

2.1.4 Silicone Sanitary (SLNT-4): Silicone rubber base sanitary sealant, Dow Corning 786.

2.1.5 Concealed Acoustical Sealant (SLNT.5): Non-drying, nonhardening, nonskinning, nonstaining, nonbleeding, gunnable sealant for concealed applications per ASTM C 919.

2.1.6 Latex Acrylic Sealant (SLNT-6): ASTM C834-81, latex acrylic sealant, Sonneborn Sonolac or prior approved equal. Also used for Exposed Acoustical Sealant.

2.1.7 Primer for Sealant: Use a non-staining, quick-drying type and consistency recommended by the sealant manufacturer for the particular application that has been tested for durability on the surfaces to be sealed.

2.1.8 Bond Breakers: Use the type and consistency recommended by the sealant manufacturer for the particular application.

2.1.9 Joint Backings: Use polyurethane or polyethylene foams free from oil or other staining elements as recommended by the sealant manufacturer. Backing material shall be compatible with the sealant. Do not use oakum and other types of absorptive materials as joint backings.

2.1.10 Masking Tape: For masking around joint, provide an appropriate masking tape which will effectively prevent application of sealant on surfaces not scheduled to receive it and which is removable without damage to substrate.

2.1.11 Color of sealants to match adjacent surfaces which may require a special color normally produced by manufacturer.

PART 3 - EXECUTION

3.1 Surface Preparation: Surfaces shall be clean, dry to the touch, and free from moisture, grease, oil, wax, lacquer, paint, or other foreign matter that would tend to destroy or impair adhesion. Where adequate grooves have not been provided, clean out grooves to a depth of 1/2 inch and grind to a minimum width of 1/4 inch without damage to the adjoining work. No grinding shall be required on metal surfaces.

3.1.1 Concrete Surfaces:

3.1.1.1 Install only on surfaces which are dry, sound, well-brushed and wiped free from dust.

3.1.1.2 At all open joints, remove dust by mechanically blown compressed air if so required.

3.1.1.3 To remove oil and grease, use sandblasting or wire brushing.

3.1.1.4 Where surfaces have been treated, remove the surface treatment by sandblasting or wire brushing.

3.1.1.5 Remove laitance and mortar from joint cavities.

3.1.2 Steel Surfaces:

3.1.2.1 Unprimed or Unfinished Steel Surfaces in Contact with Sealant: Sandblast as required to achieve acceptable surface bond. If sandblasting is not practical, or would damage adjacent finish, scrape the metal or wire brush to remove mill scale and rust. Use solvent to remove oil and grease, wiping the surfaces with clean white rags only.

3.1.2.2 Remove protective coatings on steel by sandblasting or by using a solvent which leaves no residue.

3.2 Sealant Preparation:

Do not modify the sealant by addition of liquids, solvents, or powders. Mix multicomponent elastomeric sealants in accordance with manufacturer's printed instructions.

3.3 Application:

3.3.1 Backstops: Where joint cavities are constructed deeper than indicated, tightly pack the back or bottom with backstop material to provide a joint of the depth indicated. Install backstops dry and free of tears or holes.

3.3.2 Primer: Just prior to application of the sealant or caulking compound, clean out all loose particles from joints. Apply primer in accordance with compound manufacturer's directions. Do not apply primer to exposed finish surface.

3.3.3 Bond Breaker: Provide bond breakers, as recommended by the sealant manufacturer, for each type of joint and sealant used.

3.3.4 Sealant and Caulking Compounds: Use a compound that is compatible with the material to and against which it is applied. Do not use a compound that has exceeded its shelf life or has become too jelled to be discharged in a continuous flow from the gun. Apply the compound in accordance with the manufacturer's printed instructions. Force the compound into joints with sufficient pressure to fill the joints solidly. Compound shall be uniformly smooth and free of wrinkles.

3.3.4.1 Installation of SLNT-1: Use SLNT-1 where indicated on drawings, and for other sealant work subject to movement not otherwise indicated on drawings or specified herein. Use for non-sleeved mechanical and electrical penetrations in interior or exterior walls above grade and other exterior applications, including vertical surfaces. Joints to receive SLNT-1 shall be not less than 1/4 inch and not exceed two inches in width. Depth of sealant shall be as follows:

Joint Width	Min. Depth	Max. Depth
1/4" to 1/2"	1/4"	Equal to width
1/2" to 1"	1/2"	5/8"

3.3.4.2 Installation of SLNT-2: Use SLNT-2 for horizontal surface joints subject to foot or vehicular traffic where indicated on drawings and as specified. Install in joints of exterior sidewalks adjacent to building, interior exposed joints in slabs where subject to foot or vehicular traffic, and interior exposed perimeter joints in slabs abutting walls and other vertical surfaces.

3.3.4.3 Installation of SLNT-3: Use SLNT-3 where indicated on drawings, and for joints not subject to movement between windows, door frames, sidelights, louvers, other frames, and similar conditions in interior or exterior walls. Joints to receive SLNT-3 shall be not less than 1/4 inch and not exceed 3/4 inch in width. Depth of sealant shall be as follows:

Joint Width	Min. Depth	Max. Depth
1/4" to 1/2"	1/4"	Equal to width
1/2" to 3/4"	1/4"	1/2 of width

3.3.4.4 Installation of SLNT-4: Use SLNT-4 where indicated on drawings, and for joints around counters, fixtures, and walls in toilet rooms and area requiring sanitary sealant.

3.3.4.5 Installation of SLNT-5: Use SLNT-5 where indicated on drawings and for concealed application of acoustical sealants.

3.3.4.6 Installation of SLNT-6: Use SLNT-6 where indicated on drawings and for exposed application of acoustical sealant.

3.3.4.7 Installation of SLNT-6: Use SLNT-6 for interior wall penetrations that will be exposed to view and require painting and for interior wall penetrations that will not be exposed to view.

3.3.5 Sealed joints shall be neatly pointed on flush surfaces with beading tool, and internal corners with eaving tool. Excess material shall be cleanly removed. Sealant, where exposed, shall be free of wrinkles and uniformly smooth. Sealing shall be complete before final coats of paint are applied.

3.3.6 Miscellaneous Caulking and Sealing Work: The entire extent of sealing work is not necessarily fully or individually described herein. Sealing shall be provided wherever required to prevent light leakage as well as moisture leakage. Refer to drawings and other sections of these specifications for conditions and related parts of the work.

3.4 Protection and Cleaning:

3.4.1 Protection: Protect areas adjacent to joints from compound smears. Masking tape may be used for this purpose if removed five to ten minutes after the joint is filled.

3.4.2 Cleaning: Immediately scrape off fresh compound that has been smeared on masonry and rub clean with a solvent as recommended by the compound manufacturer. Upon completion of compound application, remove all remaining smears and stains resulting therefrom and leave the work in a clean and neat condition.

END OF SECTION 07 92 00

SECTION 08 16 13 - FIBERGLASS DOORS AND FRAMES

PART 1 - GENERAL

1.1 SECTION INCLUDES

A. Fiberglass reinforced plastic (FRP) Doors

B. Fiberglass reinforced plastic (FRP) Frames

C. Fire-rated fiberglass reinforced plastic (FRP) Doors

D. Fire-rated fiberglass reinforced plastic (FRP) Frames

1.2 RELATED SECTIONS

A. Applicable provisions of Division 1 shall govern all work under this section

B. Division 4 Section "Unit Masonry Assemblies for installing anchors and grouting frames in masonry construction.

C. Division 8 Section "Door Hardware" for door hardware and weather-stripping.

D. Division 8 Section "Glazing" for glass in doors and frames.

E. Division 9 Section "Painting" for field painting factory-primed doors and frames.

1.3 QUALITY ASSURANCE

A. General: Provide fiberglass reinforced door and frame units made of components of standard construction furnished by one manufacturer as coordinated assemblies.

B. Manufacturer: Company specializing in the manufacture of fiberglass doors and frames with a minimum of five years documented experience.

C. Construction: Verify that FRP doors and frames are manufactured utilizing pultruded fiberglass components for flexibility, durability, superior strength and chemical resistance. Press-molded doors and frames will not be accepted. Resin rich door edges and gelcoat are prone to chipping and cracking (brittle).

D. Resins: Resins shall comply with USDA and FDA standards for incidental food contact.

E. Flame Spread Rating: Flame retardant structural shapes meet the minimum flame spread rating less than or equal to 25 when tested according to ASTM E84.

F. Fire-rated doors and frames to conform to NFPA 252 (2008), CAN4 S104 (1985), UL10C (2001), and UL9 (2005).

G. Impact Strength: FRP doors and panels 10.32 foot-pounds per inch of notch, ASTM D-256.

H. Tensile Strength:

a. FRP doors and panels 12,000 psi, ASTM D-638.

b. FRP frames 30,000 psi, ASTM D-638.

I. Flexural Strength: FRP doors, panels, and frames 25,000 psi, ASTM D-790.

J. Compressive Strength:

a. FRP doors and panels 18,000 psi, ASTM D-695.

b. FRP frames 30,000 psi, ASTM D-695.

K. Water Absorption: FRP doors, panels, and frames .27 %, ASTM D-570.

L. Hardware Reinforcements: FRP doors and frames fabricated with a minimum screw holding strength of 1,000 lbs.Tested with a #12 x 1-1/4" hinge screw.

M. Paint Adhesion: Coating for FRP doors, panels, and frames to conform to AAMA 624-07 for color uniformity, film adhesion, specular gloss, direct impact, abrasion resistance, and chemical resistance.

N. Warranty: Warranty fiberglass doors and frames for life of the initial installation against failure due to corrosion. Additionally, warranty fiberglass doors and frames for a period of 10 years against failure due to materials and workmanship, from date of substantial completion.

1.4 SUBMITTALS

A. Product Data: For each type of door and frame indicated, include door designation, type, level and model, material description, core description, construction details, and finishes.

1.5 DELIVERY, STORAGE, AND HANDLING

A. Deliver doors and frames cardboard-wrapped or crated to provide protection during transit and job storage.

Provide additional protection to prevent damage to finish of factory-finished doors and frames.

B. Inspect doors and frames on delivery for damage, and notify shipper and supplier if damage exists. Minor damages may be repaired provided refinished items match new work and are acceptable to the Resident Engineer and the Architect. Remove and replace damaged items that cannot be repaired as directed.

C. Store doors and frames at building site under cover. Avoid using non-vented plastic or canvas covers that could create a humidity chamber.

PART 2 - PRODUCTS

2.1 MANUFACTURERS

A. Manufacturers: Subject to compliance with requirements, provide products by the following:

1. Edgewater FRP Door - 175 N. Western Ave. Neenah, Wisconsin 54956

Phone: 920-886-1995 Fax: 920-886-1998

2. Tiger Door LLC – Izard Street Omaha, Nebraska 68102

Phone: 888-891-4416 Fax: 402-346-0561, www.tigerdoor.com

3. FRPlite, Simon Door, P.O.Box 4557, Brownsville, Texas 78523

   Phone: 866-894-7511 Fax: 956-831-7530, info@simondoor.com

4. Or approved equal.

2.2 DOORS

A. Interior Doors: Provide doors complying with requirements indicated below:

1. E-S series (heavy duty) from the "Cutting Edge" product line (seamless).
2. Doors to have at least two internal full height heavy duty vertical fiberglass stiffeners for warp resistance.
3. Expanded polystyrene solid foam core.

B. Exterior Doors and High Traffic Areas: Provide doors complying with requirements indicated below:

1. E-P series (Extra Heavy Duty) from the "Cutting Edge" product line (seamless).
2. Doors to have full height heavy duty vertical fiberglass stiffeners 6 inches on center for superior strength.
3. Expanded polystyrene solid foam core.

C. Fire-rated Doors: Provide doors complying with the requirements indicated below:

1. E-F series (Fire) from the "Cutting Edge" product line (seamless).
2. Doors to have fire-rating as indicated per schedule.
3. Fire-rated mineral core.

D. Vision Lite Systems: Lite opening shall be completely sealed utilizing fiberglass pultrusions, integrated into the units sub-frame during construction.

E. Door Louvers: Provide sight-proof louvers for doors, where indicated. Stationary louvers to be manufactured utilizing fiberglass inverted "V" blades. Louver openings shall be completely sealed in the same manner as lite openings.

F. Transom/side Panels: Transoms to be identical to the doors in construction and materials - if applicable to this project.

2.3 FRAMES

A. General: Provide pultruded fiberglass frames for doors, transoms, sidelites and borrowed lites - where indicated.

B. Frames: Comply with the requirements of grade specified for corresponding doors. Frames for E-S (standard), E-P (premier), and E-C (custom) series fiberglass doors to be manufactured from 0.1875 inch (4.8 mm) thick fiberglass pultrusions. Profile must be of standard hollow type to permit installation into new concrete or block walls, as well as slip-on drywall situations. Solid (foam filled) or boxed frames will not be accepted.

C. Fire-rated Frames: Frames for E-F (fire) series fiberglass doors to be manufactured from 0.1875 inch (4.8 mm)thick fiberglass pultrusions. Profile must be of standard hollow type to permit installation into new concrete orblock walls. Coated hollow metal frames will not be accepted.

D. Door Silencers: Except on weather-stripped frames, fabricate stops to receive three silencers on strike jambs of single-door frames and two silencers on heads of double-door frames.

E. Plaster Guards: Provide plaster guards or mortar boxes at back of hardware cutouts where mortar or other materials might obstruct hardware operation.

F. Supports and Anchors: Fabricated from no less than 0.125 inch (3.18 mm) thick pultruded fiberglass material.

1. Wall Anchors in New Masonry Construction: Provide T-strap or wire anchors.

2. Wall Anchors in Existing Masonry Construction: Provide six (three per jamb) Redhead or Lock-bolt type flat head, stainless steel expanding sleeve bolts, 3/8 inch diameter, 4 inches in length.

3. Wall Anchors in New Steel or Wood Stud Construction: Provide multi-purpose type fiberglass anchor supports in backside of frames for attachment from the stud wall into the frames anchor supports. This installation must take place prior to setting drywall.

4. Existing Steel or Wood Stud: Provide drywall slip-on frame anchoring system - compression type.

2.4 FABRICATION

A. General: Fabricate fiberglass door and frame units to be rigid, neat in appearance, and free from defects including warp and buckle. Where practical, fit and assemble units in manufacturer's plant. Clearly identify work that cannot be permanently factory assembled before shipment, to assure proper assembly at Project site.

B. Core Construction: Manufacturer's standard core construction that complies with the following:

1. E-S (standard) series to have expanded polystyrene foam core.

2. E-P (premier) series to have full height vertical fiberglass stiffeners, 6 inches on center. Voids to be filled with expanded polystyrene foam.

3. E-C (custom) series to have expanded polystyrene foam, polyurethane foam or vertical fiberglass stiffeners, where indicated.

4. E-F (fire) series to have fire-rated mineral core.

5. Hollow/honeycomb core will not be accepted.

C. Stiles and Rails: Fabricate doors utilizing heavy duty pultruded fiberglass tubular members.

D. Door Faces: Laminated composite faces shall be urethane fused to the stile and rail assembly, including the vertical stiffeners and core material, utilizing a two-part 100 percent reactive urethane adhesive, and then cured under pressure until completely bonded.

E. Clearances: Not more than 1/8 inch (3.2 mm) at jambs and heads, except not more than 1/4inch (6.4 mm) between pairs of doors. Not more than 3/4 inch (19 mm) at bottom, with standard being 5/8 inch (15.9 mm) at bottom.

F. Door Edges: Lock stile to be factory beveled 1/8" in 2" for rub-free operation. Square lock-edge will not be accepted.

G. Tolerances: Maximum diagonal distortion - 1/16 inch (1.6 mm) measured with straight edge, corner-to-corner.

H. Hardware Reinforcement: Fabricate all hardware reinforcements utilizing premium high density polyethylene (HDPE) and fiberglass blocking. Any form of wood or metal reinforcements will not be accepted.

I. Exposed Fasteners: Unless otherwise indicated, provide stainless steel, countersunk flat or oval heads for exposed screws and bolts.

J. Thermal-Rated (insulating) Assemblies: At exterior locations and elsewhere shown or scheduled, provide doors fabricated as thermal-insulating door and frame assemblies, with an "R" value of 11-12.

K. Hardware Preparations: Prepare doors and frames to receive mortised and concealed hardware according to final door hardware schedule and templates provided by hardware supplier. Doors and frames must be factory pre-drilled for all mortised hardware preps. Pilot and through-bolt holes for all surface mounted hardware to be drilled at the project site during installation.

L. Frame Construction: Fabricate frames to size and shape shown on drawings.

1. Fabricate frames with mitered resin-welded corners and seamless face joints.

2. Provide set-up and resin welded frames with temporary spreader bars.

3. Provide 4 or 6 inch terminated/hospital stops - where indicated.

M. Hardware Locations: Locate hardware as indicated on shop drawings or if not indicated, according to manufacturers standard locations.

N. Glazing/Louver Stops: Manufacturer's standard two-piece PVC retainers.

1. Provide non-removable stops on outside of exterior and on secure side of interior doors for glass, louver, and other panels in doors.

2. Provide screw-applied, removable, glazing stops on inside of glass, louvers, and other panels in doors.

3. Loose, eight piece trim kits will not be accepted. Additionally, retainers held in place by two-sided tape are not acceptable.

4. Glass to be supplied and installed under section 08 81 00, unless stated otherwise.

O. Astragals: Fabricate astragals for pairs of doors utilizing fiberglass materials in either flat or "T" configuration where indicated.

2.5 FINISHES

A. Where indicated, furnish fiberglass doors and frames factory pre-finished.

a. Finish: Manufacturers custom color chemical resistant waterborne acrylic enamel topcoat.

b. Sheen: Satin or semi-gloss - as indicated.

B. Door Faces: Face skins shall be smooth. Due to the unit's extra-long life expectancy, minor repairs on facings must be easily blended in the event of damage. Slightly textured gelcoat facings will not be accepted.

C. Finish on fiberglass frames must match that of the fiberglass doors to which they are installed. Gelcoated doors and polyurethane coated frames together as a unit will not be accepted.

2.6 HARDWARE

A. Hardware: All hardware shall be furnished under section 08 71 00, unless stated otherwise.

PART 3 - EXECUTION

3.1 INSTALLATION

A. General: Install fiberglass doors, frames, and accessories according to Shop Drawings, manufacturer's data, and as specified.

B. Placing Frames: Set frames accurately in position, plumbed, aligned, and braced securely until permanent anchors are set. After wall construction is completed, remove temporary braces and spreaders, leaving surfaces smooth and undamaged.

1. Except for frames located in existing walls or partitions, place frames before construction of enclosing walls and ceilings.

2. In masonry construction, provide at least three wall anchors per jamb; install adjacent to hinge locations on hinge jamb and at corresponding heights on strike jamb. Acceptable anchors include masonry wire anchors and masonry T-shaped anchors.

3. In existing concrete or masonry construction, provide at least three completed opening anchors per jamb; install adjacent to hinge location on hinge jamb and at corresponding heights on strike jamb. Set frames and secure to adjacent construction with stainless steel expansion bolts and masonry anchorage devices.

4. For openings 90 inches (2286 mm) or more in height, install an additional anchor at hinge and strike jambs.

C. Factory Finished Doors: Restore finish before installation if fitting or machining is required at Project site.

D. Door Installation: Fit fiberglass doors accurately in frames. Shim as necessary.

3.2 ADJUSTING AND CLEANING

A. Protection Removal: Immediately before final inspection, remove protective wrappings from doors and frames.

B. Cleaning: Clean fiberglass door and frame assemblies in accordance with manufacturer's recommended procedure.

END OF SECTION 08 16 13

SECTION 08 31 00 - ACCESS DOORS

PART 1 - GENERAL

1.1 SUBMITTALS:

1.1.1 Comply with pertinent provisions of Section 01 33 00.

1.1.2 Submit the following:

1.1.2.1 Shop Drawings: Indicate details and dimensions of fabrication and installation.

1.1.2.2 Manufacturer's Literature: Descriptive literature and installation instructions.

1.2 PRODUCT DELIVERY, STORAGE AND HANDLING:

1.2.1 Provisions of Division 1 specifications sections, apply to this section as fully as if repeated herein.

1.3 WARRANTY

1.3.1 Provide Manufacturers 5 year extended warranty.

PART 2 - PRODUCTS

2.1 MATERIALS:

2.1.1 Access Door: Type DW flush panel access door for drywall by Milcor, or equal, steel 16 gage frame and 14 gage panel.

2.1.2 Fire Rated Access Door: U. L. 1 1/2 hr. "B" label, fire rated access door by Milcor, or equal. Steel 16 gage frame and 14 gage panel, baked enamel prime coat, self-closing door, with mortise cylinder.

2.1.1.1 Oversized fire rated access door: Nystrom FRD Series double leaf.

2.1.3 Sound Control Access Door: Flush panel access door for drywall by Milcor or equal, steel frame and panel, with plaster fill and sound seals.

PART 3 – EXECUTION:

3.1 Installation:

3.1.1 Install access doors in accordance with manufacturer's recommendations and reviewed shop drawings.

3.2 Field Quality Control:

3.2.1 Moving parts operate smoothly and function properly.

3.3 Adjust and Clean:

3.3.1 Repair damage to metal items to match manufacturer's original finish. Leave free and clean of debris.

END OF SECTION 08 31 00

SECTION 08 33 26 - OVERHEAD SECTIONAL DOORS

PART 1 GENERAL

1.1 SECTION INCLUDES

Glazed Aluminum Sectional Overhead Doors

Electric Operators and Controls.

Operating Hardware, tracks, and support.

1.2 RELATED SECTIONS

Section 03 30 00 - Cast-In-Place Concrete: Prepared opening in concrete. Execution requirements for placement of anchors in concrete wall construction.

Section 05 50 00 - Metal Fabrications: Steel frame and supports.

Section 06 10 00 - Wood Blocking and Curbing: Rough wood framing and blocking.

Section 07 92 00 - Joint Sealers: Perimeter sealant and backup materials.

Section 08 71 00 - Door Hardware: Cylinder locks.

Section 09 91 00 - Paints and Coatings: Field painting.

Section 26 05 00 - Wiring Connections: Electrical service.

1.3 REFERENCES

ANSI/DASMA 102 - American National Standard Specifications for Sectional Overhead Type Doors.

1.4 DESIGN / PERFORMANCE REQUIREMENTS

Wind Loads: Design and size components to withstand loads caused by pressure and suction of wind acting normal to plane of wall as calculated in accordance with applicable code for San Diego, Ca.

Wiring Connections: Requirements for electrical characteristics to be one of the following to match building source/spec:

1. 115 volts, single phase, 60 Hz.
2. 230 volts, single phase, 60 Hz.
3. 230 volts, three phase, 60 Hz.
4. 460 volts, three phase, 60 Hz.

Single-Source Responsibility: Provide doors, tracks, motors, and accessories from one manufacturer for each type of door. Provide secondary components from source acceptable to manufacturer of primary components.

1.5 SUBMITTALS

Submit under provisions of Section 01 33 00.

Product Data: Manufacturer's data sheets on each product to be used, including:

1. Preparation instructions and recommendations.
2. Storage and handling requirements and recommendations.
3. Installation methods.

Shop Drawings: Indicate plans and elevations including opening dimensions and required tolerances, connection details, anchorage spacing, hardware locations, and installation details.

Manufacturer's Certificates: Certify products meet or exceed specified requirements.

Operation and Maintenance Data.

1.6 QUALITY ASSURANCE

Manufacturer Qualifications: Company specializing in manufacturing products specified in this section with minimum five years documented experience.

Installer Qualifications: Authorized representative of the manufacturer with minimum five years documented experience.

Products Requiring Electrical Connection: Listed and classified by Underwriters Laboratories, Inc. acceptable to authority having jurisdiction as suitable for purpose specified.

1.7 DELIVERY, STORAGE, AND HANDLING

Store products in manufacturer's unopened labeled packaging until ready for installation.

Protect materials from exposure to moisture until ready for installation.

Store materials in a dry, ventilated weathertight location.

1.8 PROJECT CONDITIONS

Pre-Installation Conference: Convene a pre-installation conference just prior to commencement of field operations, to establish procedures to maintain optimum working conditions and to coordinate this work with related and adjacent work.

PART 2 PRODUCTS

2.1 MANUFACTURERS

Acceptable Manufacturer: Overhead Door Corp., 2501 S. State Hwy. 121, Suite 200, Lewisville, TX 75067. ASD. Tel. Toll Free: (800) 275-3290. Phone: (469) 549-7100. Fax: (972) 906-1499. Web Site: www.overheaddoor.com. E-mail: sales@overheaddoor.com.

Substitutions: approved Equals

Requests for substitutions will be considered in accordance with City of San Diego provisions.

2.2 GLAZED ALUMINUM SECTIONAL OVERHEAD DOORS

Glazed Sectional Overhead Doors: 521 Series Aluminum Doors by Overhead Door Corporation. Installation of Standard Headroom Track - with Springs to the Front with Model RSX (3/4 HP) Trolley-type (Double Drawbar) hoist.

1. Door Assembly: Stile and rail assembly secured with 1/4 inch (6 mm) diameter through rods.

   Panel Thickness: 1-3/4 inches (44 mm), 5 rows high and 8 panels across with bottom row panel 'clad' interior to prevent bowing.

   Center Stile Width: 2-11/16 inches (68 mm)

   End Stile Width: 3-5/16 inches (84 mm)

   Intermediate Rail Pair Width: 3-11/16 inches (94 mm).

   Top Rail Width:

   1. 3-3/4 inches (95 mm).

   Bottom Rail Width:

   1. 4-1/2 inches (114 mm).

   Aluminum Panels: 0.050 inch (1.3 mm) thick, aluminum.

   Stiles and Rails: 6063 - T6 aluminum.

   Springs:

   1. 100,000 cycles.

   Glazing:

      1/8 inch (3 mm) Tempered Glass.

   Safety:

      Door Bottom Sensing Edge and Two (2) Separate Electrical Sensing Eye at each door opening set at 2'-6" AFF on opposite

jambs.

2. Finish and Color:

   a. Powder Coating Finish: Color as selected by the Resident Engineer and the Architect from manufacturer's standard colors.

3. Windload Design: Provide to meet the Design/Performance requirements specified.

4. Hardware: Galvanized steel hinges and fixtures. Ball bearing rollers with hardened steel races.

5. Lock: Interior galvanized single unit.

6. Weatherstripping:

   Flexible bulb-type strip at bottom section.

   Flexible Jamb seals.

   Flexible Header seal.

7. Track: 3" track as recommended by manufacturer to suit loading required and clearances available.

8. Electric Operation: Overhead Door Company Model RSX or Liftmaster Model T or approved equal -Trolley-type (drawbar) hoist, 3/4 HP. Double drawbar - 2 pickup points and offset operators. Door 1 - mount operators on 2 and 6 stiles. Door 2 - mount operators on 3 and 5 stiles or as recommended by manufacturer.

9. Controls: Separate push button operation for each door and Master Control Panel for control of both doors.

10. Remotes: Door operators to be compatible with Delta Linear III Controller/Receivers. Provide 3 devices to owner.

PART 3 EXECUTION

3.1 EXAMINATION

Do not begin installation until openings have been properly prepared.

Verify wall openings are ready to receive work and opening dimensions and tolerances are within specified limits.

Verify electric power is available and of correct characteristics.

If preparation is the responsibility of another installer, notify the Resident Engineer and the Architect of unsatisfactory preparation before proceeding.

3.2 PREPARATION

Clean surfaces thoroughly prior to installation.

Prepare surfaces using the methods recommended by the manufacturer for achieving the best result for the substrate under the project conditions.

3.3 INSTALLATION

Install overhead doors and track in accordance with approved shop drawings and the manufacturer's printed instructions.

Coordinate installation with adjacent work to ensure proper clearances and allow for maintenance.

Anchor assembly to wall construction and building framing without distortion or stress.

Securely brace door tracks suspended from structure. Secure tracks to structural members only.

Fit and align door assembly including hardware.

Coordinate installation of electrical service. Complete power and control wiring from disconnect to unit components.

3.4 CLEANING AND ADJUSTING

Adjust door assembly and operators for smooth operation and in full contact with weatherstripping.

Adjust safety sensing devices for full operation.

Adjust remote controllers for full operation.

Clean doors, frames and glass.

Remove temporary labels and visible markings.

3.5 PROTECTION

Do not permit construction traffic through overhead door openings after adjustment and cleaning.

Protect installed products until completion of project.

Touch-up, damaged coatings and finishes and repair minor damage before Substantial Completion.

END OF SECTION 08 33 26

SECTION 08 41 00-ALUMINUM STOREFRONT SYSTEM

PART 1 - GENERAL

1.1 RELATED DOCUMENTS & DESCRIPTION OF WORK:

The work includes the design, engineering, associated calculations, furnishing, installing, and testing of the curtain wall and exterior storefront system complete, as indicated and as specified. The Conditions of the Contract and Division 1 apply to this section as full as if repeated herein.

1.2 CODES AND STANDARDS:

A. Aluminum windows and exterior storefront system shall conform with the "**California Building Code, Current Edition, (CBC)"**.

B. State of California title 24 Building Energy Efficiency standards, and the values listed on the ENV-1 form filed elsewhere in the contract documents

1.3 WINDOWS, DOORS, CURTAINWALL & EXTERIOR STOREFRONT SYSTEM SUPPLIERS:

1.3.1 A. Exterior storefront system shall be the 2" x 4 ½" offset type glazed system, FG3000MP as manufactured by Old Castle Building Envelope.

B. the following manufactures may be considered equal provided they can supply product certified by the N.F.R.C. and provided they are prepared to be the "responsible party" for N.F.R.C. certification:

1. Old Castle Building Envelope
2. Kawneer,
3. Arcadia
4. or approved equal.

1.3.2 A. Exterior curtainwall storefront system shall be the 2 1/2" x 6" offset type glazed system, Reliance as manufactured by Old Castle Building Envelope.

B. the following manufactures may be considered equal:

1. Old Castle Building Envelope
2. Kawneer,
3. Arcadia
4. or approved equal.

1.4 CONTRACTOR'S RESPONSIBILITY:

The contractor is hereby advised that the responsibility for the curtainwall/storefront system (**including engineering**) is totally his and that all designs and resolutions proposed in the shop drawings, calculations and related documentation and certification must be

demonstrated not only in the test procedure, but also throughout the guarantee periods as herein specified. No compensation for omissions or errors on the part of the windows, sliding doors, curtain wall, and exterior storefront system contractor in the engineering, design, and execution of this contract will be awarded. The contractor's responsibility shall also include, but not be limited to, the following:

1.4.1 Submit written notification to the Resident Engineer and the Architect of any deficiencies or discrepancies that would affect the proper or timely installation of the work in this section.

1.4.2 Coordinate and verify dimensions affecting his work by measurement at the job site.

1.4.3 Obtain decisions regarding corrective measures from the Architect prior to the refabrication and/or modification of items affected by field conditions which vary with those on the approved shop drawings and/or contract documents. Obtain decisions on those items, which are detrimental to the proper and timely installation.

1.4.4 Insure the compatibility of adjacent items and materials that relate to this work.

1.4.5 Prior to bid, the Contractor and/or supplier shall perform and assume design and engineering of the storefront and/or curtain wall system to define all necessary integral components including but not limited to, anchors, attachments, steel reinforcing, etc to conform with parameters as defined in the drawings {sizes and configurations) and the specifications.

1.5 QUALITY ASSURANCE:

1.5.1 Qualifications:

1.5.1.1 Welding shall be done by skilled and qualified mechanics licensed where required in accordance with local building regulations. Welding shall be in conformance with AWS Structural Welding Code D1.1-84.

1.5.1.2 Testing Laboratories shall be specifically qualified to conduct the performance test required by these specifications.

1.5.1.2.1 Air infiltration, water penetration, and structural tests shall be conducted by an approved laboratory.

1.5.1.2.2 Performance tests may be conducted in the Suppliers Laboratories provided they are witnessed and certified by an independent professional engineer.

1.5.1.3 Any or all tests may be waived provided test reports prepared by recognized testing agencies or certified by independent professional engineers, are submitted showing that the doors, store fronts, entrances, curtain walls and other components or acceptable facsimile thereof have met or exceeded all performance requirements. Certifications of compliance with a standard by a recognized testing agency is also acceptable in lieu of testing.

1.5.2 Performance and Testing Requirements: All components, assemblies and completed work included in and pertinent to the work of this section shall conform to the following performance standards and comply with the applicable sections of the current California Building Code, California Title 24, codes and regulations of all governing agencies having jurisdiction and shall be in accordance with published applicable industry standards and these specifications, whichever is more restrictive.

1.5.2.1 Provision for Thermal Movements: Storefront and curtainwall framing systems shall be designed to provide for such expansion and contraction of component materials as will be caused by a surface temperature ranging from... -20 F to 180 F... without causing buckling, stresses on glass, failure of joint seals, undue stress on structural elements, damaging loads on fasteners, reduction of performance, or other detrimental effects. Doors shall function normally over this temperature range.

1.5.2.2 Structural Properties:

1.5.2.2.1 Exterior storefront and curtainwall systems shall be designed to withstand the following minimum wind loads acting normal to the plane of the wall as per the "**California Building Code, Current Edition, (CBC)"**:

1) 15 psf acting inward and 20 psf acting outward for the 2 1/2" x 6" system.

2) 6.5 psf acting inward and 10 psf acting outward for the 2" x 4 1/2" system.

1.5.2.2.2 The deflection of any framing member in a direction normal to the plane of the wall when subjected to a uniform load deflection test at design pressures specified above, in accordance with ASTM E330-70 shall not exceed 1/175 of its clear span, up to 13 feet 6 inches and 1/240 + ¼" of its clear span when the span is over 13 feet 6 inches. Maximum fiber stress shall be 1.65.

1.5.2.2.3 Uniform load structural tests shall be conducted in accordance with ASTM E330-70. Inward and outward acting test pressures shall be equal to 1.5 times the inward and outward acting design wind pressures specified. At the conclusion of these tests, there shall be no glass breakage, permanent damage to fasteners or anchors, hardware parts or actuating mechanisms. Main curtain wall framing members shall have no permanent deformation in excess of 0.2% of their clear span.

1.5.2.2.4 Deflection measurements shall be made from gauges located on the vertical mullions, and horizontal members at 1/3 points and 1/2 points of span.

1.5.2.2.5 The deflection of any member in a direction parallel to the plane of the wall when carrying its full dead load shall not exceed an

amount which will reduce the glass bite below 75% of the design dimension and the member shall have a 1/8" minimum clearance between itself and the top of the fixed panel, glass, or other fixed part immediately below. The clearance between the member and door shall be at least 1/16".

1.5.2.3 Water Infiltration:

1.5.2.3.1 Water infiltration, in this Specification, is defined as the appearance of water other than condensation on the indoor face of any part of the wall.

1.5.2.3.2 Provision shall be made to drain to the exterior face of the wall any water entering joints and/or condensation occurring within the wall construction.

1.5.2.3.3 Water infiltration shall be tested in accordance with ASTM E 331. No water penetration at a test pressure of 10 psf.

1.5.2.4 Air Leakage: Air leakage through the system shall not exceed 0.06 cfm per square foot of fixed area at a test pressure of 6.24 psf. and shall be tested in accordance with ASTM E 283.

1.5.2.5 Other Performance Requirements and Tests: Seismic Racking.

1.6 SUBMITTALS:

1.6.1 Comply with pertinent provisions of Section 01 33 00.

1.6.2 Shop Drawings: Drawings shall show scale elevations and details shall be at full scale as far as practical. Drawings shall include a hardware schedule where required and shall show construction of all parts of the work, including metal and glass thickness, methods of joining, break metal details, details of all field connections and anchorage, fastening and sealing methods, metal finishes and all pertinent information. Relationship to other work should be clearly indicated. No work shall be fabricated until shop drawings for that work have been finally approved. Show provision for and control of thermal movements at all anchors and splice joints. Size all sealant joints per sealant manufacturer's printed instructions. Include engineered calculations, stamped and signed by a California licensed engineer, assuring the structural properties of the system.

1.6.3 Samples: Before any work is fabricated, the following samples, properly identified, shall be submitted to the Resident Engineer and the Architect for his approval: 6-inch length of extrusions fully glazed with sealants - framing two sides of glass, and incorporating both interior and exterior finish systems.

1.6.4 Test Reports: Certified copies of test reports on the performance of standard wall systems and components shall be submitted to the Resident Engineer and the architect on request in lieu of conducting repeat tests.

1.6.5 Sealant Manufacturer's Acceptance: Letter of acceptance by sealant manufacturer for the use of the product(s) as detailed in the shop drawings shall be submitted to the Resident Engineer and the Architect.

A. Provide a copy of the ENV-1 form showing the thermal performance required for the fenestration products

B. Provide evidence of who will be the "responsible party" for certifying the fenestration products.

C. Provide documentation to show that all fenestration products can be certified equal to or less than the requirements shown on the ENV-1 form. *AAMA test reports and or simulations will not be accepted as they are not allowed under the current code*.

1.7 IDENTIFICATION, DELIVERY, AND STORAGE OF MATERIALS:

1.7.1 All components of the system shall be identified after fabrication by marks clearly indicating their location on the building. Packaging, if necessary, shall be the minimum necessary to protect the parts from damage during shipping and hoisting.

1.7.2 Pre-designated storage spaces shall be used so that the stored materials will not be exposed to damage from wetting, traffic or operations of other trades.

1.8 WARRANTY:

1.8.1 This Contractor shall warrant for 2 years from the date of Substantial Completion of the work related to the system that the work is not defective in workmanship or materials and conforms to the final, reviewed shop drawings, except for reasonable variances not impairing the usefulness thereof. This warranty applies to both patent and latent defects but does not include damage caused by acts of God, ordinary wear and tear or unusual abuse or neglect or the acts or omissions of parties other than this Contractor. This warranty is in lieu of all other warranties expressed or implied.

1.9 REIMBURSEMENT FOR SPECIAL PROVISIONS:

1.9.1 If variations exceed the tolerances specified, for the building frame, or if variations within permissible tolerances leave insufficient clearance for proper anchorage, necessitating extra fabrication or installation work by this Contractor in order to install the systems in a manner acceptable to the Resident Engineer and the Architect, he may be reimbursed the extra costs involved, provided these costs are determined by the Contractor and approved by the Resident Engineer and the Architect before installation work in the affecting area is begun.

PART 2 - PRODUCTS

2.1 METALS:

2.1.1 Extrusions and break metal shall be 6063-T6 alloy and temper (ASTM B 221 alloy G.S. 10A-T5). Fasteners, where exposed, shall be aluminum, stainless steel or plated

steel in accordance with ASTM A 164. Perimeter anchors shall be aluminum or steel, providing the steel is properly isolated from the aluminum. Exterior glazing gasket shall be E.P.D.M. and interior glazing seal shall be closed cell P.V.C. foam sealant tape. All mullions and horizontals for 1" glazing shall be thermally isolated from the pressure plate by a rigid vinyl separator.

2.1.2 Aluminum Alloys: Standard Alloys shall conform to the requirements published in the Aluminum Association's "Aluminum Standards and Data," and to the following standards:

2.1.2.1 Sheet and plate: ASTM B209-83

2.1.2.2 Extruded bars, rods, shapes and tubes: ASTM B221-84

2.1.2.3 Bars, rods and wire: ASTM B211-73

2.1.2.4 Standard structural shapes: ASTM B308-72

2.1.2.5 Drawn seamless tube: ASTM B210-73

2.1.2.6 Extruded structural shapes: ASTM B429-73

2.1.2.7 Sand castings: ASTM B26-74

2.1.2.8 Permanent mold castings: ASTM B108-73

2.1.2.9 Die castings: ASTM B85-73

2.1.2.10 Welding rods and bare electrodes: AWS A5-10

2.2 FASTENER METALS FOR JOINING VARIOUS METAL COMBINATIONS:

2.2.1 No exposed view fasteners.

2.2.1.1 Aluminum to Aluminum: Zinc plated steel, concealed.

2.2.1.2 Aluminum to Stainless Steel or Carbon Steel: Zinc plated steel, concealed, or cadmium plated steel, concealed.

2.2.1.3 Stainless Steel Fastener Types, Designation and Standards: 300 or 400 series.

2.3 PROTECTIVE MATERIALS FOR METALS:

2.3.1 Painting for carbon steel and high strength steel: zinc chromate Fed. Spec. TT-P-645.

2.4 FINISHES:

2.4.1 Aluminum:

2.4.1.1 Organic coating system on mullion surfaces, break metal, accent trim, and framing members: Provide pretreatment, prime coat and finish coat. Exterior finish coat shall be fluorpolymer paint coating Kynar of custom color meeting the requirements of AAMA 2605.2. All colors to be selected and approved by the Resident Engineer and the Architect. Submittals and samples as per Section 01 33 00.

2.4.1.2 Fluorocarbon Coating: AAMA 2605.2.

2.4.1.2.1 Resin: 70% PVDF Kynar 500/Hylar 5000.

2.4.1.2.2 Substrate: cleaned and pretreated with chromium phosphate.

2.4.1.2.3 Primer: Manufacturer's standard resin base compatible coating. Dry film thickness.

2.4.1.2.3.1 Extrusion: Minimum 0.20 mil.

2.4.1.2.4 Color Coat: 70% PVDF, dry film thickness.

2.4.1.2.4.1 Extrusion: 1.0 mil.

2.4.1.2.5 Color: As selected by the Resident Engineer and the Architect.

2.4.1.2.6 Acceptable Coatings Manufacturers:

2.4.1.2.6.1 PPG Industries, Inc.

2.4.1.2.6.2 Valspar Corporation

2.4.1.2.6.3 BASF

2.4.1.2.7 Final Coat: Clear Coat finish compatible with color coat finish.

2.5 EXTERIOR STOREFRONT SYSTEM:

2.5.1 Exterior storefront and curtainwall system shall be;

A. Exterior storefront system shall be the 2" x 4 ½" offset type glazed system for 1" glazing, FG3000MP as manufactured by Old Castle Building Envelope.

B. Exterior curtainwall storefront system shall be the 2 1/2" x 6" offset type glazed system for 1/4" glazing, Reliance as manufactured by Old Castle Building Envelope. as shown on drawings.

Exterior storefront manufacturer shall be responsible for the detailed design and engineering of the system and supply all necessary anchoring devices, door fittings, brackets, break metal, housings, steel reinforcing, end dams, and integral hardware for the proper installation of the entire system. Framing, reinforcing, and anchoring devices shall be structurally adequate to carry the dead load, to resist the wind load and seismic load to comply with the current governing Uniform Building Code and to withstand the normal loads imposed by the operations of the entrance doors.

2.5.2 Entrance doors shall be: Not Used

2.5.3 Integral hardware finish shall match door hardware system finish - oil rubbed bronze.

2.5.4 The installed exterior storefront system shall meet the applicable performance requirements specified.

2.6 FABRICATION:

2.6.1 All parts of the exterior storefront system and break metal shall be of the materials, design, sizes, and thickness, subject to commercial tolerances, shown or called for on the Resident Engineer and the Architect reviewed drawings and/or herein specified. Methods of fabrication and assembly, however, unless otherwise specifically stated, shall be at the discretion of the manufacturer.

2.6.2 Joints in Metal Work: All exposed work shall be carefully matched to produce continuity of line and design, with all joints, unless otherwise shown or specified, being accurately fitted and rigidly secured.

2.6.3 Shop Assembly: As far as practicable, all fitting and assembly work shall be done in the shop.

2.6.4 Exposed Fasteners: Exposed fasteners on finished surfaces shall have Phillips Head - countersunk screw heads unless otherwise shown or specified.

2.6.5 Protection of Metals: Protection against galvanic action shall be provided wherever dissimilar metals are in contact. This protection shall be provided either by painting the contact surfaces with zinc rich primer as specified, or by application of an appropriate separator.

2.6.6 Welding:

2.6.6.1 All welding shall be in accordance with recommendations of the American Welding Society and shall be done with electrodes and/or by methods recommended by the suppliers of the metals being welded. Type, size, and spacing of welds shall be as shown on approved shop drawings. All exposed welds shall be ground smooth to match adjacent surfaces.

2.6.6.2 Welds behind finished surfaces shall be so done as to minimize distortion and/or discolorations on the finished side. Weld spatter and welding oxides on finished surfaces shall be removed by descaling and/or grinding.

2.6.6.3 All glass surfaces should be protected from weld spatter. These can produce surface damage, which can materially weaken the glass surface.

2.6.7 Use of Sealing Materials: Sealing materials shall be used in accordance with the recommendations of the manufacturer of the material and joints to be sealed shall be in accordance with the designs and tolerances shown on the Resident Engineer and the Architect reviewed shop drawings.

2.6.8 Shop or Field Glazing: Glazing work shall be done in accordance with the

recommendations of the FGMA Glazing Manual or Glazing Materials Manufacturer. Refer to Section 08 81 00 for related information. Gasket color shall be approved by the Resident Engineer and the Architect prior to installation.

2.7 ALUMINUM OPERABLE WINDOWS:

A. Provide heavy commercial grade operable ALUMINUM WINDOWS AS MANUFACTURED by Arcadia Inc, T200 Series. Windows shall be Awning, Casement, or sliders as detailed. Operation handle shall be accessible outside the fixed screen installation, when screens are installed. Windows shall be compatible with selected storefront system, with matching finish and glazing.

B. The following manufactures may be considered equal provided they can supply product certified by the N.F.R.C. and provided they are prepared to be the "responsible party" for N.F.R.C. certification:
1. Torrance Aluminum series 2000.

2. Or approved equal.

PART 3 - EXECUTION

3.1 LINES AND GRADES:

3.1.1 Exterior Store Fronts: The Contractor will provide this contractor with a building perimeter offset line located per the drawings. He shall provide bench marks at convenient points immediately adjacent to each entrance. The Contractor shall be responsible for the accuracy of the location of the perimeter lines and the elevation of the bench marks.

3.1.2 Correction of Errors: Should any error be found in either location or elevation of the above, this contractor shall so notify the Contractor in writing. Installation work shall not proceed in the affected areas until the errors have been corrected. All removal and reinstallation of work properly installed but out of line or elevation as a result of improperly located reference marks shall be executed by this contractor as authorized extra work. In the event that the above corrective work involves a substantial delay in the installation schedule, such delay shall be handled in accordance with the provisions of the contract documents.

3.2 PRIOR INSPECTION OF THE STRUCTURE:

3.2.1 After lines and grades have been established, and before beginning installation in any assigned area, this contractor shall examine all parts of the structure affecting the installation of his work in that area. Should any conditions be found which, in his opinion, will prevent the proper execution of his work, he shall report such conditions in writing to the Resident Engineer, the Architect, and the Contractor. Installation work shall not proceed in that area until such conditions are corrected or adjusted to the satisfaction of the Resident Engineer and the Architect and the Contractor.

3.3 INSTALLATION:

3.3.1 Store front and curtainwall system (and break metal trim) shall be erected plumb and true, in proper alignment and relation to established lines and grades in accordance with the manufacturer's installation instructions and as shown on the Resident Engineer and the Architect reviewed shop and erection drawings. All joints between framing and building structure shall be sealed in order to secure a watertight installation.

3.3.2 Entrance Doors: Entrance doors shall be securely anchored in place to a straight, plumb and level condition, without distortion, in accordance with the Resident Engineer and the Architect reviewed drawings. Weather stripping contact and hardware movement shall be checked and final adjustment made for proper operations and performance of units.

3.3.3 Operable windows to be installed in prepared openings in accordance with manufacturer's recommendations. Windows to be set level, plumb, and securely fastened, using caulking and flashing in accordance with good window installation practices.

3.4 ERECTION TOLERANCES:

3.4.1 Permissible dimensional tolerances in the building frame and other work adjacent to the wall are as follows:

3.4.1.1 Store front/curtainwall shall be designed to accommodate these tolerances, provided irregularities do not exceed them, and clearances shown on approved shop drawings are maintained, all parts of the store front/curtainwall when completed, shall be within the following tolerances:

3.4.1.1.1 Maximum variation from plan or location shown on approved shop drawings: 1/16" per 12 feet of length.

3.4.1.1.2 Maximum offset from true alignment between two identical members abutting end to end in line: 1/16"

3.5 ANCHORAGE:

3.5.1 Anchorage of the wall to the building structure shall be in accordance with the approved shop and erection drawings. Anchors shall meet the requirements of these specifications. After the wall is properly positioned, all connections so designated on the Resident Engineer and the Architect reviewed drawings shall be rigidly fixed.

3.6 WELDING:

3.6.1 Welds and adjacent metal areas shall be thoroughly cleaned and painted with primer specified. Special care shall be taken to prevent fires and to protect glass and other finished surfaces from damage by weld splatter. Any damage to adjacent areas due to welding will be borne by this contractor.

3.7 REMOVAL OF DEBRIS:

3.7.1 All debris by or incidental to the installation work shall be promptly removed from the job site as the work progresses.

3.8 PROTECTION AND CLEANING:

3.8.1 This contractor shall remove from the installed work all mastic smears or other unsightly marks caused by his workmen, and shall be responsible for any damage to, or disfigurement of the work caused at any time by his own men. Protection of the work against damage by other trades, as well as any cleaning other than this, shall be the responsibility of the Contractor.

END OF SECTION 08 41 00

SECTION 08 71 00 - DOOR HARDWARE

PART 1 -GENERAL

1.1 SUMMARY

A. Section Includes:

1. Door hardware, including electric hardware.
2. Digital keypad access control devices.
3. Card access control system.
4. Cylinders for doors fabricated with locking hardware.

B. Related Sections:

1. Section 01 45 00 - Quality Control
2. Section 06 20 00 - Finish Carpentry
3. Section 07 92 00 - Joint Sealers
4. Section 08 16 13 - FRP Doors and Frames
5. Section 08 41 00 - Entrances and Storefronts
6. Section 08 81 00 - Glazing
7. Section 26 05 00 - Electrical Power
8. Section 00 00 00 - Fire/Life-Safety System by Owner
9. Section 00 00 00 - Security Access Systems by Owner

C. Specific Omissions: Hardware for the following is specified or indicated elsewhere.

1. Windows.
2. Cabinets, including open wall shelving and locks.
3. Signs, except where scheduled.
4. Toilet accessories, including grab bars.
5. Installation.
6. Rough hardware.
7. Conduit, junction boxes & wiring.
8. Folding partitions, except cylinders where detailed.
9. Sliding aluminum doors, except cylinders where detailed.
10. Access doors and panels, except cylinders where detailed.
11. Corner Guards.
12. Wrought Iron railing gates and supports.

1.2 REFERENCES:

Use date of standard in effect as of Bid date.

A. American National Standards Institute – ANSI 156.18 – Materials and Finishes.

B. BHMA – Builders Hardware Manufacturers Association

C. DHI – Door and Hardware Institute

D. NFPA – National Fire Protection Association

1. NFPA 80 – Fire Doors and Windows

2. NFPA 105 – Smoke and Draft Control Door Assemblies

3. NFPA 252 – Fire Tests of Door Assemblies

4. NFPA 101 – Life Safety Code

E. UL – Underwriters Laboratories

1. UL10C – Positive Pressure Fire Tests of Door Assemblies.

2. UL 305 – Panic Hardware

F. WHI – Warnock Hersey Incorporated

G. 2013State of California Building Code

H. Local applicable codes

I. SDI – Steel Door Institute

J. WI – Woodwork Institute

K. AWI – Architectural Woodwork Institute

L. NAAMM – National Association of Architectural Metal Manufacturers

1.3 SUBMITTALS & SUBSTITUTIONS

A. SUBMITTALS: Submit six copies of schedule per Section 01330. Only submittals printed one sided will be accepted and reviewed. Organize vertically formatted schedule into “Hardware Sets” with index of doors and headings, indicating complete designations of every item required for each door or opening. Include following information:

1. Type, style, function, size, quantity and finish of hardware items.

2. Use BHMA Finish codes per ANSI A156.18.

3. Name, part number and manufacturer of each item.

4. Fastenings and other pertinent information.

5. Description of door location using space names and numbers as published in the drawings.

6. Explanation of abbreviations, symbols, and codes contained in schedule.

7. Mounting locations for hardware.

8. Door and frame sizes, handing, materials, fire-rating and degrees of swing.

9. List of manufacturers used and their nearest representative with address and phone number.

10. Catalog cuts.

11. Wiring Diagrams.

12. Manufacturer's technical data and installation instructions for electronic hardware.

13. Date of jobsite visit.

B. Bid and submit manufacturer's updated/improved item if scheduled item is discontinued.

C. Deviations: Highlight, encircle or otherwise identify deviations from "Schedule of Finish Hardware" on submittal with notations clearly designating those portions as deviating from this section.

D. If discrepancy between drawings and scheduled material in this section, bid the more expensive of the two choices, note the discrepancy in the submittal and request direction from the Resident Engineer and theArchitect for resolution.

E. Substitutions per Division 1. Include product data and indicate benefit to the Project. Furnish operating samples on request.

F. Furnish as-built/as-installed schedule with closeout documents, including keying schedule, wiring diagrams, manufacturers' installation, adjustment and maintenance information, and supplier's final inspection report.

1.4 QUALITY ASSURANCE:

A. Qualifications:

1. Hardware supplier: direct factory contract supplier who employs a certified architectural hardware consultant (AHC), available at reasonable times during course of work for project hardware consultation to Owner, Resident Engineer, Architect and Contractor.

a) Responsible for detailing, scheduling and ordering of finish hardware. Detailing implies that the submitted schedule of hardware is correct and complete for the intended function and performance of the openings.

B. Hardware: Free of defects, blemishes and excessive play. Obtain each kind of hardware (latch and locksets, exit devices, hinges and closers) from one manufacturer.

C. Exit Doors: Operable from inside with single motion without the use of a key or special knowledge or effort.

D. Fire-Rated Openings: NFPA 80 compliant. Hardware UL10C / California State Fire Marshal Standard 12-7-4 (positive pressure) compliant for given type/size opening and degree of label. Provide proper latching hardware, non-flaming door closers, approved-bearing hinges, and resilient seals. Coordinate with wood door section for required intumescent seals. Furnish openings complete.

1. Note: scheduled resilient seals may exceed selected door manufacturer's requirements.

2. See 2.6.E for added information regarding resilient and intumescent seals.

E. Furnish hardware items required to complete the work in accordance with specified performance level and design intent, complying with manufacturers' instructions.

1.5 DELIVERY, STORAGE AND HANDLING:

A. Delivery: coordinate delivery to appropriate locations (shop or field).

1. Permanent keys and cores: secured delivery direct to Owner's representative.

B. Acceptance at Site: Items individually packaged in manufacturers' original containers, complete with proper fasteners and related pieces. Clearly mark packages to indicate contents, locations in hardware schedule and door numbers.

C. Storage: Provide securely locked storage area for hardware, protect from moisture, sunlight, paint, chemicals, dust, excessive heat and cold, etc.

1.6 PROJECT CONDITIONS AND COORDINATION:

A. Where exact types of hardware specified are not adaptable to finished shape or size of members requiring hardware, provide suitable types having as nearly as practical the same operation and quality as type specified, subject to the Resident Engineer and theArchitect's approval.

B. Coordination: Coordinate hardware with other work. Furnish hardware items of proper design for use on doors and frames of the thickness, profile, swing, security and similar requirements indicated, as necessary for proper installation and function, regardless of omissions or conflicts in the information on the Contract Documents. Furnish related trades with the following information:

1. Location of embedded and attached items to concrete.

2. Location of wall-mounted hardware, including wall stops.

3. Location of finish floor materials and floor-mounted hardware.

4. Locations for conduit and raceways as needed for electrical, electronic and electro-pneumatic hardware items. Fire/life-safety system interfacing. Point-to-point wiring diagrams plus riser diagrams to related trades.

5. Manufacturer templates to door and frame fabricators.

C. Check Shop Drawings for doors and entrances to confirm that adequate provisions will be made for proper hardware installation. Do not order hardware until the submittal has been reviewed by the frame and door suppliers for compatibility with their products.

D. Prior to submittal, carefully inspect existing conditions at each opening to verify finish hardware required to complete Work, including sizes, quantities, existing hardware scheduled for re-use, and sill condition material. If conflict or incompatibility between the specified/scheduled hardware and existing conditions, submit request for direction from the Resident Engineer and theArchitect. Include date of jobsite visit in the submittal.

1. Submittals prepared without thorough jobsite visit by qualified hardware expert will be rejected as non-compliant.

1.7 WARRANTY:

A. Part of respective manufacturers' regular terms of sale. Provide manufacturers' written warranties:

1.	Locksets:	Three years
2.	Extra Heavy Duty Cylindrical Lock:	Seven Years
3.		
4.		
5.	Closers:	Ten years mechanical Two years electrical
6.	Hinges:	One year
7.	Continuous Hinges	Life of the Installation
8.	Other Hardware	Two years

1.8 COMMISSIONING:

A. Conduct these tests prior to request for certificate of substantial completion:

1. With installer present, test door hardware operation with climate control system and stairwell pressurization system both at rest and while in full operation.
2. With installer, access control contractor and electrical contractor present, test electrical, electronic and electro-pneumatic hardware systems for satisfactory operation.
3. With installer and electrical contractor present, test hardware interfaced with fire/life-safety system for proper operation and release.

PART 2PRODUCTS

2.1 MANUFACTURERS:

A. Listed acceptable alternate manufacturers: submit for review products with equivalent function and features of scheduled products.

ITEM:	**MANUFACTURER:**	**ACCEPTABLE SUB:**
Hinges	(IVE) Ives	Bommer
Continuous Hinges	(IVE) Ives	Zero
Permanent Core System	(BES) Best Lock (cores by Owner)	

ITEM:	MANUFACTURER:	ACCEPTABLE SUB:
Locks	Best	(SCH) Schlage
Closers	(LCN) LCN	
Silencers	(IVE) Ives	Trimco
Push & Pull Plates	(IVE) Ives	Trimco
Kickplates	(IVE) Ives	Trimco
Stops & Holders	(IVE) Ives	Trimco
Overhead Stops	(GLY) Glynn-Johnson	None available
Thresholds	(NGP) NGP	Zero
Seals & Bottoms	(NGP) NGP	Zero

2.2 HINGING METHODS:

A. Drawings typically depict doors at 90 degrees, doors will actually swing to maximum allowable. Use wide-throw conventional or continuous hinges as needed up to 8 inches in width to allow door to stand parallel to wall for true 180-degree opening. Advise the Resident Engineer and thearchitect if 8-inch width is insufficient.

B. Conform to manufacturer's published hinge selection standard for door dimensions, weight and frequency, and to hinge selection as scheduled. Where manufacturer's standard exceeds the scheduled product, furnish the heavier of the two choices, notify the Resident Engineer and theArchitect of deviation from scheduled hardware.

C. Conventional Hinges: Brass or stainless steel pins and concealed bearings. Hinge open widths minimum, but of sufficient throw to permit maximum door swing.

1. Outswinging exterior doors: non-ferrous with non-removable (NRP) pins and security studs.

2. Non-ferrous material exteriors and at doors subject to corrosive atmospheric conditions.

3. Fire rated doors are required to be Stainless Steel.

D. Continuous Hinges:

1. Pinned steel/stainless steel type: continuous stainless steel, 0.25-inch diameter stainless-steel hinge pin.

a) Use engineered application-specific wide-throw units as needed to provide maximum swing degree of swing, advisethe Resident Engineer and the architect if required width exceeds 8 inches.

2. At masonry construction, coordinate with the anchoring and hollow metal

supplier prior to frame installation by placing a strip of insulation on the back of the hollow metal frame behind the rabbet section. When the frame is grouted in place, the backing will allow drilling and tapping without dulling or breaking the installer's bits..

2.3 LOCKSETS, LATCHSETS, DEADBOLTS:

A. Extra Heavy Duty Cylindrical Locks and Latches: as scheduled.

1. Chassis: cylindrical design, corrosion-resistant plated cold-rolled steel, through-bolted.
2. Locking Spindle: stainless steel, integrated spring and spindle design.
3. Latch Retractors: forged steel. Balance of inner parts: corrosion-resistant plated steel, or stainless steel.
4. Latchbolt: steel.
5. Backset: 2-3/4" typically, more or less as needed to accommodate frame, door or other hardware.
6. At Vandlgard locks, locked lever freely rotates up and down while remaining securely locked. This feature prevents damage to internal lock components when subjected to excessive force.
7. Lever Trim: accessible design, independent operation, spring-cage supported, minimum 2" clearance from lever mid-point to door face.
8. Electric operation: Manufacturer-installed continuous duty solenoid.
9. Strikes: 16 gage curved steel, bronze or brass with 1" deep box construction, lips of sufficient length to clear trim and protect clothing.
10. Lock Series and Design: Schlage L series, "17L" design.
11. Certifications:
    a) ANSI A156.2, 1994, Series 4000, Grade 1.
    b) UL listed for A label and lesser class single doors up to 4ft x 8ft

2.4 NOT USED

2.5 CLOSERS

A. Surface Closers:

1. Full rack-and-pinion type cylinder with removable full metal cover and cast iron body. Double heat-treated pinion shaft, single piece forged piston, chrome-silicon steel spring.
2. ISO 2000 certified. Units stamped with date-of-manufacture code.
3. Independent lab-tested 10,000,000 cycles.
4. Non-sized, non-handed, and adjustable. Place closer inside building, stairs, and rooms.
5. Plates, brackets and special templating when needed for interface with

particular header, door and wall conditions and neighboring hardware.

6. Adjustable to open with not more than 5.0lbs pressure to open at exterior doors and 5.0lbs at interior doors. As allowed per California Building Code, Section 1133B.2.5, local authority may increase the allowable pressure for fire doors to achieve positive latching, but not to exceed 15lbs.

7. When provided, the sweep period of the closer shall be adjusted so that from an open position of 70 degrees, the door will take at least 3 seconds to move to a point 3 inches from the latch, measured to the landing side of the door.

8. Separate adjusting valves for closing speed, latching speed and backcheck, fourth valve for delayed action where scheduled.

9. Extra-duty arms (EDA) at exterior doors scheduled with parallel arm units.

10. Exterior door closers: tested to 100 hours of ASTM B117 salt spray test, furnish data on request.

11. Exterior doors: seasonal adjustments not required for temperatures from 120 degrees F to -30 degrees F, furnish checking fluid data on request.

12. Non-flaming fluid, will not fuel door or floor covering fires.

13. Pressure Relief Valves (PRV) not permitted.

14. Supply Special Rust Inhibitor(SRI) at corrosive environments. This special corrosion resistant pretreatment, when added to the powder coat finish, gives the closer a tremendous advantage over a potentially corrosive environment.

2.6 OTHER HARDWARE

A. Automatic Flush Bolts: Low operating force design.

B. Overhead Stops: Non-plastic mechanisms and finished metal end caps. Field-changeable hold-open, friction and stop-only functions.

C. Kick Plates: Rounded and relieved edges, .050 inches minimum thickness, height and width as scheduled. Sheet-metal screws of bronze or stainless steel to match other hardware.

D. Door Stops: Provide stops to protect walls, casework or other hardware.

1. Unless otherwise noted in Hardware Sets, provide floor type with appropriate fasteners. Where floor type cannot be used, provide wall type. If neither can be used, provide overhead type.

2. Locate overhead stops for maximum possible opening. Consult with Owner for furniture locations. Minimum: 90deg stop / 95deg deadstop. Note degree of opening in submittal.

E. Seals: Finished to match adjacent frame color. Resilient seal material: polyurethane, polypropylene, nylon brush, silicone rubber or solid high-grade neoprene as scheduled. Do not furnish vinyl seal material. UL label applied to seals on rated doors. Substitute products: certify that the products equal or exceed specified material's thickness and durability.

1. Proposed substitutions: submit for approval.

2. Solid neoprene: MIL Spec. R6855-CL III, Grade 40.

3. Non-corroding fasteners at in-swinging exterior doors.

4. Sound control openings: Use components tested as a system using nationally accepted standards by independent laboratories. Ensure that the door leafs have the necessary sealed-in-place STC ratings. Fasten applied seals over bead of sealant.

5. Fire-rated Doors, Resilient Seals: UL10C / UBC Standard 7-2 compliant. Coordinate with selected door manufacturers' and selected frame manufacturers' requirements. Where rigid housed resilient seals are scheduled in this section and the selected door manufacturer only requires an adhesive-mounted resilient seal, furnish rigid housed seal at minimum, or both the rigid housed seal plus the adhesive applied seal. Adhesive applied seals alone are deemed insufficient for this project where rigid housed seals are scheduled.

6. Fire-rated Doors, Intumescent Seals: Furnished by selected door manufacturer. Furnish fire-labeled opening assembly complete and in full compliance with UL10C / UBC Standard 7-2. Where required, intumescent seals vary in requirement by door type and door manufacture -- careful coordination required

F. Automatic door bottoms: low operating force units. Doors with automatic door bottoms plus head and jamb seals cannot require more than two pounds operating force to open when closer is disconnected.

G. Thresholds: As scheduled and per details. Comply with CBC Section 1133B.2.4.1. Substitute products: certify that the products equal or exceed specified material's thickness. Proposed substitutions: submit for approval.

1. Exteriors: Seal perimeter to exclude water and vermin. Use sealant complying with requirements in Division 7 "Thermal and Moisture Protection". Non-ferrous 1/4inch fasteners and lead expansion shield anchors, or Red-Head #SFS-1420 (or approved equivalent) Flat Head Sleeve Anchors (SS/FHSL).

2. Flat saddle type thresholds shall have a minimum wall thickness of .125".

3. Fire-rated openings, 90min or less duration: use thresholds to interrupt floor covering material under the door where that material has a critical radiant flux value less than 0.22 watts per square centimeter, per NFPA 253. Use threshold unit as scheduled. If none scheduled, request direction from the Resident Engineer and the Architect.

4. Fire-rated openings, 3hour duration: Thresholds, where scheduled, to extend full jamb depth.

5. Acoustic openings: Set units in full bed of Division-7-compliant, leave no air space between threshold and substrate.

6. Plastic plugs with wood or sheet metal screws are not an acceptable substitute for specified fastening methods.

7. Fasteners: Generally, exposed screws to be Phillips or Robertson drive. Pinned TORX drive at high security areas. Flat head sleeve anchors (FHSL) may be slotted drive. Sheet metal and wood screws: full-thread. Sleeve nuts:

full length to prevent door compression.

H. Exposed Through-Bolts: Grommet nuts, sleeve nuts or other such clamping type fasteners, intent is for minimal exposed hardware. Coordinate with FRP door Mfg; ensure provision of proper blocking to support wood screws for mounting panic hardware and door closers.

I. Silencers: Interior hollow metal frames, 3 for single doors, 2 for pairs of doors. Omit where adhesive mounted seal occurs. Leave no unfilled/uncovered pre-punched silencer holes.

2.7 FINISH:

A. Generally:

1. BHMA 626 Brushed Satin Chrome on Brass or Bronze Base
2. BHMA 626 Satin Stainless

B. Door closers: factory powder coated with special rust inhibiter finish to match other hardware, unless otherwise noted.

C. Aluminum items: match predominant adjacent material. Seals to coordinate with frame color.

2.8 KEYING REQUIREMENTS:

A. Key System:

1. Provide Small Format Key System. Equal to Best
2. Permanent Key system to be keyed by City Lock shop .
3. Construction keying: furnish temporary cores.
4. Temporary cylinders/cores will become City Property.
5. Furnish 10 construction keys.
6. Furnish 2 construction control keys.
7. Temporary key cylinders: furnish 6-pin solid brass construction.

PART 3 -EXECUTION

3.1 ACCEPTABLE INSTALLERS:

A. Can read and understand manufacturers' templates, suppliers' hardware schedules and printed installation instructions. Can readily distinguish drywall screws from manufacturers' furnished fasteners. Available to meet with manufacturers' representatives and related trades to discuss installation of hardware.

3.2 PREPARATION:

A. Ensure that walls and frames are square and plumb before hardware installation. Make corrections before commencing hardware installation.

B. Locate hardware per SDI-100 and applicable building, fire, life-safety, accessibility, and security codes.

1. Notify the Resident Engineer and theArchitect of code conflicts before ordering material.

2. Locate levers, key cylinders, t-turn pieces, and other operable portions of latching hardware between 30 inches to 44 inches above the finished floor, per CBC Section 1133B.2.5.2.

3. Where new hardware is to be installed near existing doors/hardware scheduled to remain, match locations of existing hardware.

C. Overhead stops: before installing, determine proposed locations of furniture items, fixtures, and other items to be protected by the overhead stop's action.

3.3 INSTALLATION

A. Install hardware per manufacturer's instructions and recommendations. Do not install surface-mounted items until finishes have been completed on substrate. Set units level, plumb and true to line and location. Adjust and reinforce attachment substrate for proper installation and operation. Remove and reinstall or replace work deemed defective bythe Resident Engineer and the Architect.

1. Gaskets: install jamb-applied gaskets before closers, overhead stops, rim strikes, etc; fasten hardware over and through these seals. Install sweeps across bottoms of doors before astragals, cope sweeps around bottom pivots, trim astragals to tops of sweeps.

2. When hardware is to be attached to existing metal surface and insufficient reinforcement exists, use RivNuts, NutSerts or similar anchoring device for screws.

3. Use manufacturers' fasteners furnished with hardware items, or submit Request for Substitution with the Resident Engineer and theArchitect.

4. Replace fasteners damaged by power-driven tools.

B. Locate floor stops no more that 4 inches from walls and not within paths of travel. See paragraph 2.2 regarding hinge widths, door should be well clear of point of wall reveal. Point of door contact no closer to the hinge edge than half the door width. Where situation is questionable or difficult, contact the Resident Engineer and theArchitect for direction.

C. Core concrete for exterior door stop anchors. Set anchors in approved non-shrink grout.

D. Locate overhead stops for minimum 90 degrees and maximum allowable degree of swing.

E. Drill pilot holes for fasteners in FRP doors and/or frames. Centerpunchhole locations before using self-drilling type screws to prevent skating. Replace screws that are not centered in their holes.

F. Lubricate and adjust existing hardware scheduled to remain. Carefully remove and give to Owner items not scheduled for reuse.

3.4. ADJUSTING

A. Adjust and check for proper operation and function. Replace units, which cannot be adjusted to operate freely and smoothly.

1. Hardware damaged by improper installation or adjustment methods: repair or replace to Owner's satisfaction.

2. Adjust doors to fully latch with no more than 1 pound of pressure.

3. Adjust delayed-action closers on fire-rated doors to fully close from fully-opened position in no more than 10 seconds.

4. Adjust door closers per 1.9 this section.

B. Final inspection: Installer to provide letter to Owner that upon completion installer has visited the Project and has accomplished the following:

1. Re-adjust hardware.

2. Evaluate maintenance procedures and recommend changes or additions, and instruct Owner's personnel.

3. Identify items that have deteriorated or failed.

4. Submit written report identifying problems

3.5 DEMONSTRATION:

A. Demonstrate mechanical hardware and electrical, electronic and pneumatic hardware systems, including adjustment and maintenance procedures.

B. Certification, Testing and Quality Control shall be in accordance with Division 01 45 23 Testing and Inspection services. All doors hardware and installation will be inspected by a third party selected by the Resident Engineer, architect/owner.

3.6 PROTECTION/CLEANING:

A. Cover installed hardware, protect from paint, cleaning agents, weathering, carts/barrows, etc. Remove covering materials and clean hardware just prior to substantial completion.

B. Clean adjacent wall, frame and door surfaces soiled from installation/reinstallation process.

C. Hardware items specified to receive antimicrobial coating may be cleaned with a mild detergent, air-dry or dried with a soft cloth. Avoid harsh abrasive cleaners and abrasive cleaning pads.

3.7 SCHEDULE OF FINISH HARDWARE

A. See door schedule in drawings for hardware set assignments.

B. Manufacturers and their abbreviations used in this schedule:

IVE Ives

LCN LCN Closers

NGP National Guard Products

SCH Schlage Lock Company

C. Schedule Groups:

SpeXtra # 115148

Heading01

1	PR	Door102A	EXTERIOR/RECEPTION
1	PR	Door102B	EXTERIOR/RECEPTION

2/3' 0" X 8' 0" X 1 3/4" X FRPD X FRPF X NONRTD

Each Assembly to have:

2	EA	CONT. HINGE	700	630	IVE
1	EA	DEADBOLT	MS1852S X 4015 X 4085 1-1/8" BS	628	ADA
1	EA	MAGNETIC LOCK	72 DC70	630	SCE
2	SET	PUSH/PULL BAR	9190HD-10"-STD	630	IVE
2	EA	H-SEC SURFACE CLOSER	4213T SRI TBSRT	689	LCN
2	EA	KICK PLATE	8400 10" X 2" LDW B4E TEK CS	626	IVE
1	SET	SEAL (TEAR DROP)	5050B	BRN	NGP
2	EA	DOOR SWEEP W/DRIP	101VA	CL	NGP
1	EA	BRONZE THRESHOLD	426BR-SIA	728	NGP
2	EA	DOOR CONTACT	7764	628	SCE
1	EA	POWER SUPPLY	PS914	LGR	FAL

MOUNT J-BOX JUST ABOVE DOOR HEADER FOR DOOR CONTACT SWITCH WIRING.
SECURE COVER OF J-BOX WITH TORX SCREWS.
DOOR CONTACTS WIRED TO INTRUSION ALARM
MOUNT J-BOX ON INTERIOR (BY DIV 28) JUST ABOVE DOOR HEADER FOR DOOR CONTACT SWITCH WIRING. SECURE COVER OF J-BOX WITH TORX SCREWS.
SIGN OVER DOOR "DOORS TO BE UNLOCKED WHEN BUILDING IS OCCUPIED"

Heading02

1	SGL	Door101A	EXTERIOR/FIRST AID RM

3' 0" X 7' 0" X 1 3/4" X FRPD X FRPF X NONRTD

Each Assembly to have:

3	EA	HW HINGE	3CB1HW 4.5 X 4.5	626	IVE
1	EA	POWER TRANSFER	EPT10	689	VON
1	EA	EU STOREROOM LOCK	RX-LV9080HDEU LLL 17A L283-239	626	SCH
1	EA	PERMANENT CORE	OWNER SUPPLIED	626	BES
1	EA	SURFACE CLOSER	4041 DEL SHCUSH SRI MC TBSRT	689	LCN
1	EA	KICK PLATE	8400 10" X 2" LDW B4E TEK CS	626	IVE
1	EA	STAINLESS STEEL DRIP CAP	16SS	630	NGP
1	SET	SEAL (TEAR DROP)	5050B	BRN	NGP
1	EA	DOOR SWEEP W/DRIP	101VA	CL	NGP
1	EA	BRONZE THRESHOLD	426BR-SIA	728	NGP
1	EA	DOOR CONTACT	7764	628	SCE
1	EA	POWER SUPPLY	PS902	LGR	VON

ACCESS CONTROL BY CITY INTEGRATOR CONTRACT
MOUNT J-BOX JUST ABOVE DOOR HEADER FOR DOOR CONTACT SWITCH WIRING.
SECURE COVER OF J-BOX WITH TORX SCREWS.
DOOR CONTACTs WIRED TO INTRUSION ALARM
MOUNT J-BOX ON INTERIOR (BY DIV 28) JUST ABOVE DOOR HEADER FOR DOOR CONTACT SWITCH WIRING. SECURE COVER OF J-BOX WITH TORX SCREWS.

Heading03

1 SGL Door114A EXTERIOR/BOAT & BUAY STORAGE
3' 0" X 7' 0" X 1 3/4" X FRPD X FRPF X NONRTD

Each Assembly to have:

3	EA	HW HINGE	3CB1HW SH 4.5 X 4.5 NRP	626	IVE
1	EA	POWER TRANSFER	EPT10	689	VON
1	EA	EU STOREROOM LOCK	RX-LV9080HDEU 17L L283-239	626	SCH
1	EA	PERMANENT CORE	OWNER SUPPLIED	626	BES
1	EA	LOCK GUARD	LG10	630	IVE
1	EA	SURFACE CLOSER	4041 DEL SHCUSH SRI MC TBSRT	689	LCN
1	EA	KICK PLATE	8400 10" X 2" LDW B4E TEK CS	626	IVE
1	EA	STAINLESS STEEL DRIP CAP	16SS	630	NGP
1	SET	SEAL (TEAR DROP)	5050B	BRN	NGP
1	EA	DOOR SWEEP W/DRIP	101VA	CL	NGP
1	EA	BRONZE THRESHOLD	426BR-SIA	728	NGP
1	EA	DOOR CONTACT	7764	628	SCE
1	EA	POWER SUPPLY	PS902	LGR	VON

ACCESS CONTROL BY CITY INTEGRATOR CONTRACT
MOUNT J-BOX JUST ABOVE DOOR HEADER FOR DOOR CONTACT SWITCH WIRING.
SECURE COVER OF J-BOX WITH TORX SCREWS.
DOOR CONTACTs WIRED TO INTRUSION ALARM
MOUNT J-BOX ON INTERIOR (BY DIV 28) JUST ABOVE DOOR HEADER FOR DOOR CONTACT SWITCH WIRING. SECURE COVER OF J-BOX WITH TORX SCREWS.

Heading04

1 SGL Door114C EXTERIOR/STAIRS
3' 0" X 7' 0" X 1 3/4" X FRPD X FRPF X 60MIN

Each Assembly to have:

3	EA	HW HINGE	3CB1HW SH 4.5 X 4.5 NRP	626	IVE
1	EA	POWER TRANSFER	EPT10	689	VON
1	EA	EU STOREROOM LOCK	RX-LV9080HDEU 17L L283-239	626	SCH
1	EA	PERMANENT CORE	OWNER SUPPLIED	626	BES
1	EA	LOCK GUARD	LG10	630	IVE
1	EA	SURFACE CLOSER	4041 DEL SCUSH SRI MC TBSRT	689	LCN
1	EA	KICK PLATE	8400 10" X 2" LDW B4E TEK CS	626	IVE
1	EA	STAINLESS STEEL DRIP CAP	16SS	630	NGP
1	SET	SEAL (TEAR DROP)	5050B	BRN	NGP
1	EA	DOOR SWEEP W/DRIP	101VA	CL	NGP
1	EA	BRONZE THRESHOLD	426BR-SIA	728	NGP
1	EA	DOOR CONTACT	7764	628	SCE
1	EA	POWER SUPPLY	PS902	LGR	VON

ACCESS CONTROL BY CITY INTEGRATOR CONTRACT
MOUNT J-BOX JUST ABOVE DOOR HEADER FOR DOOR CONTACT SWITCH WIRING.
SECURE COVER OF J-BOX WITH TORX SCREWS.
DOOR CONTACTs WIRED TO INTRUSION ALARM
MOUNT J-BOX ON INTERIOR (BY DIV 28) JUST ABOVE DOOR HEADER FOR DOOR CONTACT SWITCH WIRING. SECURE COVER OF J-BOX WITH TORX SCREWS.

Heading05

1 SGL Door301A EXTERIOR/OBSERVATION
2' 8" X 9' 0" X 1 3/4" X FRPD X FRPF X NONRTD

Each Assembly to have:

3	EA	HW HINGE	3CB1HW 4.5 X 4.5	626	IVE
1	EA	ENTRANCE W/DEADBOLT	LV9453HD 17L L583-363	626	SCH
1	EA	PERMANENT CORE	OWNER SUPPLIED	626	BES
1	EA	SURFACE CLOSER	4041 DEL SHCUSH SRI MC TBSRT	689	LCN
1	EA	KICK PLATE	8400 10" X 2" LDW B4E TEK CS	626	IVE
1	EA	STAINLESS STEEL DRIP CAP	16SS	630	NGP
1	SET	SEAL (TEAR DROP)	5050B	BRN	NGP
1	EA	DOOR SWEEP W/DRIP	101VA	CL	NGP
1	EA	BRONZE THRESHOLD	426BR-SIA	728	NGP
1	EA	DOOR CONTACT	7764	628	SCE

ACCESS CONTROL BY CITY INTEGRATOR CONTRACT
MOUNT J-BOX JUST ABOVE DOOR HEADER FOR DOOR CONTACT SWITCH WIRING.
SECURE COVER OF J-BOX WITH TORX SCREWS.
DOOR CONTACTs WIRED TO INTRUSION ALARM
MOUNT J-BOX ON INTERIOR (BY DIV 28) JUST ABOVE DOOR HEADER FOR DOOR CONTACT SWITCH WIRING. SECURE COVER OF J-BOX WITH TORX SCREWS.

Heading06

1 PR Door109A EXTERIOR/ELECT RM
2/3' 0" X 7' 0" X 1 3/4" X FRPD X FRPF X NONRTD

Each Assembly to have:

6	EA	HW HINGE	3CB1HW SH 4.5 X 4.5 NRP	626	IVE
1	SET	HM DOOR CONST LATCHING TOP AND BOTTOM BOLT	FB51P	630	IVE
1	EA	STOREROOM LOCK	LV9080P LLL 17A 10-072 7/8" LIP	626	SCH
1	EA	SDGE KEYWAY FOR ELECTRIC RM	SDGE 30-001 114 VKC QUAD	626	SCH
1	EA	DOOR PULL	VR910M NL	630	IVE
2	EA	SURFACE OH STOP WITH SPRING CUSH SMB	79S SMB	626	GLY
1	EA	DRIP CAP	16A	CL	NGP
1	SET	SEAL (TEAR DROP)	5050B	BRN	NGP
1	EA	ASTRAGAL	139SS 84" SNB	630	NGP
2	EA	DOOR SWEEP W/DRIP	101VA	CL	NGP
1	EA	BRONZE THRESHOLD	426BR-SIA	728	NGP
2	EA	DOOR CONTACT	7764	628	SCE

MOUNT J-BOX JUST ABOVE DOOR HEADER FOR DOOR CONTACT SWITCH WIRING.
SECURE COVER OF J-BOX WITH TORX SCREWS.
DOOR CONTACT WIRED TO INTRUSION ALARM
cut astragal to go around exterior pull trim
KEY PER SDG&E

Heading07

1	SGL	Door103A	RECEPTION/RESTROOM
1	SGL	Door104A	RECEPTION/RESTROOM

3' 0" X 7' 0" X 1 3/4" X FRPD X FRPF X NONRTD

Each Assembly to have:

3	EA	HW HINGE	3CB1HW 4.5 X 4.5	626	IVE
1	EA	PUSH PLATE	8200 8" X 16"	630	IVE
1	EA	PULL PLATE	8302 10" 4" X 16"	630	IVE
1	EA	SURFACE CLOSER	4041 DEL SCUSH SRI MC TBSRT	689	LCN
1	EA	KICK PLATE	8400 10" X 2" LDW B4E TEK CS	626	IVE
3	EA	SILENCER	SR64	GRY	IVE

Heading08

1	SGL	Door102C	RECEPTION/STAIRS
1	SGL	Door114B	FIRST AID/STORAGE

3' 0" X 7' 0" X 1 3/4" X FRPD X FRPF X 60MIN

Each Assembly to have:

4	EA	HW HINGE	3CB1HW SH 4.5 X 4.5 NRP	626	IVE
1	EA	STOREROOM LOCK	LV9080HD 17L	626	SCH
1	EA	PERMANENT CORE	OWNER SUPPLIED	626	BES
1	EA	SURFACE CLOSER	4041 DEL REG OR PA AS REQ SRI MC TBSRT	689	LCN
1	EA	KICK PLATE	8400 10" X 2" LDW B4E TEK CS	626	IVE
1	EA	WALL STOP	WS20	626	IVE
1	SET	SEAL (TEAR DROP)	5050B	BRN	NGP

MOUNT WALL STOP/HOLDER AT TOP OF DOOR

Heading09

1	SGL	Door200A	STAIRS/READY RM

3' 0" X 9' 0" X 1 3/4" X FRPD X FRPF X 60MIN

Each Assembly to have:

3	EA	HW HINGE	3CB1HW 4.5 X 4.5	626	IVE
1	EA	PASSAGE SET	L9010 17L	626	SCH
1	EA	SURFACE CLOSER	4041 DEL REG OR PA AS REQ SRI MC TBSRT	689	LCN
1	EA	KICK PLATE	8400 10" X 2" LDW B4E TEK CS	626	IVE
1	EA	KICK PLATE	8400 10" X 2" LDW B4E TEK CS	626	IVE
1	EA	WALL STOP	WS20	626	IVE
1	SET	SEAL (TEAR DROP)	5050B	BRN	NGP

MOUNT WALL STOP/HOLDER AT TOP OF DOOR

Heading10

1	SGL	Door200B	READY RM/STAIRS		
		2' 8" X 9' 0" X 1 3/4" X FRPD X FRPF X NONRTD			

Each Assembly to have:

4	EA	HW HINGE	3CB1HW SH 4.5 X 4.5 NRP	626	IVE
1	EA	PASSAGE SET	L9010 17L	626	SCH
1	EA	SURFACE CLOSER	4041 DEL HCUSH SRI MC TBSRT	689	LCN
1	EA	KICK PLATE	8400 10" X 2" LDW B4E TEK CS	626	IVE
1	EA	WALL STOP	WS401CVX	626	IVE
1	SET	SEAL (TEAR DROP)	5050B	BRN	NGP

DOOR HOLDER SET AT 90DEG

Heading11

1	SGL	Door101B	FIRST AID/BOAT & BUAY STORAGE		
1	SGL	Door113A	FIRST AID/STORAGE		
		3' 0" X 7' 0" X 1 3/4" X FRPD X FRPF X NONRTD			
1	SGL	Door301B	OBSERVATION/MECHANICAL		
		3' 0" X 5' 6" X 1 3/4" X FRPD X FRPF X NONRTD			

Each Assembly to have:

4	EA	HW HINGE	3CB1HW SH 4.5 X 4.5 NRP	626	IVE
0	EA	STOREROOM LOCK	LV9080HD 17L	626	SCH
1	EA	PERMANENT CORE	OWNER SUPPLIED	626	BES
1	EA	SURFACE CLOSER	4041 DEL REG OR PA AS REQ SRI MC TBSRT	689	LCN
1	EA	KICK PLATE	8400 10" X 2" LDW B4E TEK CS	626	IVE
1	EA	WALL STOP/HOLDER	WS40	626	IVE
1	SET	SEAL (TEAR DROP)	5050B	BRN	NGP

MOUNT WALL STOP/HOLDER AT TOP OF DOOR

Heading12

1	SGL	Door203A	READY RM/STORAGE		
		2' 6" X 7' 0" X 1 3/4" X FRPD X FRPF X NONRTD			

Each Assembly to have:

4	EA	HW HINGE	3CB1HW SH 4.5 X 4.5 NRP	626	IVE
0	EA	STOREROOM LOCK	LV9080HD 17L	626	SCH
1	EA	PERMANENT CORE	OWNER SUPPLIED	626	BES
1	EA	SURFACE OH STOP WITH SPRING CUSH SMB	79S SMB	626	GLY

MOUNT WALL STOP/HOLDER AT TOP OF DOOR

Heading13

1	PR	Door108A	RECEPTION/STORAGE		
		2/2' 6" X 7' 0" X 1 3/4" X FRPD X FRPF X NONRTD			

Each Assembly to have:

6	EA	HW HINGE	3CB1HW 4.5 X 4.5 NRP	626	IVE
1	EA	HM DOOR CONST LATCHING TOP BOLT	FB51T	630	IVE
1	EA	STOREROOM LOCK	LV9080HD 17L	626	SCH
1	EA	PERMANENT CORE	OWNER SUPPLIED	626	BES

2	EA	SURFACE OH STOP-HOLDR	79H	626	GLY
1	SET	SEAL (TEAR DROP)	5050B	BRN	NGP
1	EA	OVERLAPPING ASTAGAL	158SA	CL	NGP

Heading14

1	SGL	Door103B	UTILITY/RESTROOM
1	SGL	Door104B	UTILITY/RESTROOM

3' 0" X 7' 0" X 1 3/4" X FRPD X FRPF X 90MIN

Each Assembly to have:

3	EA	HW HINGE	3CB1HW 4.5 X 4.5	626	IVE
1	EA	PASSAGE SET	L9010 17L	626	SCH
1	EA	SURFACE CLOSER	4041 DEL SCUSH SRI MC TBSRT	689	LCN
0	EA	KICK PLATE	8400 10" X 2" LDW B4E TEK CS	626	IVE
1	EA	WALL STOP	WS401CVX	626	IVE
1	SET	SEAL (TEAR DROP)	5050B	BRN	NGP
1	EA	DOOR SWEEP W/DRIP	101VA	CL	NGP
1	EA	BRONZE THRESHOLD	426BR-SIA	728	NGP
3	EA	SILENCER	SR64	GRY	IVE

Heading15

1	SGL	Door202A	READY RM/ADMIN

3' 0" X 7' 0" X 1 3/4" X FRPD X FRPF X NONRTD

Each Assembly to have:

3	EA	HW HINGE	3CB1HW 4.5 X 4.5	626	IVE
1	EA	OFFICE/ENTRY LOCK	L9050HD 17L L583-363	626	SCH
1	EA	PERMANENT CORE	OWNER SUPPLIED	626	BES
1	EA	FLOOR STOP/HOLDER	FS40	626	IVE
1	EA	COAT AND HAT HOOK	582	626	IVE
3	EA	SILENCER	SR64	GRY	IVE

Heading16

1	SGL	Door112A	RECEPTION/TOILET

3' 0" X 7' 0" X 1 3/4" X FRPD X FRPF X NONRTD

Each Assembly to have:

3	EA	HW HINGE	3CB1HW 4.5 X 4.5	626	IVE
1	EA	PRIVACY W/DB & IND	L9496HD 17L L583-363 OCC	626	SCH
1	EA	PERMANENT CORE	OWNER SUPPLIED	626	BES
1	EA	SURFACE CLOSER	4041 DEL REG OR PA AS REQ SRI MC TBSRT	689	LCN
1	EA	KICK PLATE	8400 10" X 2" LDW B4E TEK CS	626	IVE
1	EA	MOP PLATE	8400 4" X 1" LDW B4E CS	630	IVE
1	EA	WALL STOP	WS401CVX	626	IVE
1	EA	COAT AND HAT HOOK	582	626	IVE
3	EA	SILENCER	SR64	GRY	IVE

Heading17

1	SGL	Door115A	RECEPTION/STORAGE 3' 0" X 7' 0" X 1 3/4" X FRPD X FRPF X NONRTD			

Each Assembly to have:

3	EA	HW HINGE	3CB1HW SH 4.5 X 4.5 NRP	626	IVE
1	EA	STOREROOM LOCK	LV9080HD 17L	626	SCH
1	EA	PERMANENT CORE	OWNER SUPPLIED	626	BES
1	EA	SURFACE CLOSER	4041 DEL REG OR PA AS REQ SRI MC TBSRT	689	LCN

Heading18

1	RU	Door105A	EXTERIOR/RESCUE VEHICLES			
1	RU	Door105B	EXTERIOR/RESCUE VEHICLES 22' 0" X 10' 0" X 1" X ALD X STF X NONRTD			

Each Assembly to have:

0			BALANCE OF HARDWARE BY DOOR MANUFACTURER		

Heading19

1	PD	Door201A	READY RM/TOILET 3' 0" X 7' 0" X 1 3/4" X FRPD X FRPF X NONRTD			

Each Assembly to have:

0	SET	TRACK & HARDWARE	C-400 84 IN		KNC
0	EA	HANGERS	C-400 HANGERS , GUIDE, SCREWS FOR 1 DR. Stainless Steel hangers and track		KNC
1	EA	SLIDING PVCY LOCK	1074-2 MERRYVALE	630	TRI
1	EA	COAT AND HAT HOOK	582	626	IVE
0	EA	DOOR GUIDE	C-1202		KNC

locate coat hook on wall

End of Schedule

END OF SECTION 08 71 00

SECTION 08 71 01 - FINISH HARDWARE SCHEDULE

PART 1 - GENERAL

1.1 RELATED DOCUMENTS AND DESCRIPTION OF WORK

1.1.1 The work includes the furnishing, delivery and installing of finish hardware as indicated on drawings and as specified.

Door Schedule

Mark #	Door #	HW Set	Mode	Width	Height	Thick	Door	Frame	Rating	Outside Loc	Inside Loc
101A	101A	02	SGL	3' 0"	7' 0"	1 3/4"	FRPD	FRPF	NONRTD	EXTERIOR	FIRST AID RM
101B	101B	11	SGL	3' 0"	7' 0"	1 3/4"	FRPD	FRPF	NONRTD	FIRST AID	BOAT & BUAY STORAGE
102A	102A	01	PR	6' 0"	8' 0"	1 3/4"	FRPD	FRPF	NONRTD	EXTERIOR	RECEPTION
102B	102B	01	PR	6' 0"	8' 0"	1 3/4"	FRPD	FRPF	NONRTD	EXTERIOR	RECEPTION
102C	102C	08	SGL	3' 0"	7' 0"	1 3/4"	FRPD	FRPF	60MIN	RECEPTION	STAIRS
103A	103A	07	SGL	3' 0"	7' 0"	1 3/4"	FRPD	FRPF	NONRTD	RECEPTION	RESTROOM
103B	103B	14	SGL	3' 0"	7' 0"	1 3/4"	FRPD	FRPF	90MIN	UTILITY	RESTROOM
104A	104A	07	SGL	3' 0"	7' 0"	1 3/4"	FRPD	FRPF	NONRTD	RECEPTION	RESTROOM
104B	104B	14	SGL	3' 0"	7' 0"	1 3/4"	FRPD	FRPF	90MIN	UTILITY	RESTROOM
105A	105A	18	RU	22' 0"	10' 0"	1"	ALD	STF	NONRTD	EXTERIOR	RESCUE VEHICLES
105B	105B	18	RU	22' 0"	10' 0"	1"	ALD	STF	NONRTD	EXTERIOR	RESCUE VEHICLES
108A	108A	13	PR	5' 0"	7' 0"	1 3/4"	FRPD	FRPF	NONRTD	RECEPTION	STORAGE
109A	109A	06	PR	6' 0"	7' 0"	1 3/4"	FRPD	FRPF	NONRTD	EXTERIOR	ELECT RM
112A	112A	16	SGL	3' 0"	7' 0"	1 3/4"	FRPD	FRPF	NONRTD	RECEPTION	TOILET
113A	113A	11	SGL	3' 0"	7' 0"	1 3/4"	FRPD	FRPF	NONRTD	FIRST AID	STORAGE
114A	114A	03	SGL	3' 0"	7' 0"	1 3/4"	FRPD	FRPF	NONRTD	EXTERIOR	BOAT & BUAY STORAGE
114B	114B	08	SGL	3' 0"	7' 0"	1 3/4"	FRPD	FRPF	60MIN	FIRST AID	STORAGE
114C	114C	04	SGL	3' 0"	7' 0"	1 3/4"	FRPD	FRPF	60MIN	EXTERIOR	STAIRS
115A	115A	17	SGL	3' 0"	7' 0"	1 3/4"	FRPD	FRPF	NONRTD	RECEPTION	STORAGE
200A	200A	09	SGL	3' 0"	9' 0"	1 3/4"	FRPD	FRPF	60MIN	STAIRS	READY RM
200B	200B	10	SGL	2' 8"	9' 0"	1 3/4"	FRPD	FRPF	NONRTD	READY RM	STAIRS
201A	201A	19	PD	3' 0"	7' 0"	1 3/4"	FRPD	FRPF	NONRTD	READY RM	TOILET
202A	202A	15	SGL	3' 0"	7' 0"	1 3/4"	FRPD	FRPF	NONRTD	READY RM	ADMIN
203A	203A	12	SGL	2' 6"	7' 0"	1 3/4"	FRPD	FRPF	NONRTD	READY RM	STORAGE
301A	301A	05	SGL	2' 8"	9' 0"	1 3/4"	FRPD	FRPF	NONRTD	EXTERIOR	OBSERVATION
301B	301B	11	SGL	3' 0"	5' 6"	1 3/4"	FRPD	FRPF	NONRTD	OBSERVATION	MECHANICAL

END OF SECTION 08 71 01

SECTION 08 81 00 - GLAZING

PART 1 - GENERAL

1.1 RELATED DOCUMENTS AND DESCRIPTION OF WORK:

The work includes the furnishing and installing of all glass work complete, as shown and noted on the drawings and as specified. The Conditions of the Contract and Division 1 apply to this section as fully as if repeated herein.

1.2 CODES:

1.2.1 Glass and glazing shall conform with the **"California Building Code, current edition (CBC)"**, Chapter 24 "Glass and Glazing", Consumer Product Safety Commission regulation CPSC 16 CFR 1201, and CAC Title 8, Section 3010(b)(1)).

1.2.2 Contractor shall provide and install glazing per all applicable codes. Locations shown on drawings are for Contractors convenience only and shall not relieve responsibility to provide safety glazing in all locations required by code.

1.3 REFERENCED STANDARDS:

1.3.1 American Society for Testing and Materials (ASTM).

1.3.1.1 ASTM C 509 - Standard Specification for Elastomeric Cellular Preformed Gasket and Sealing Material

1.3.1.2 ASTM C 1036 – Standard Specification for Flat Glass

1.3.1.3 ASTM C 1048 – Standard Specification for Heat-Strengthened and Fully Tempered Flat Glass

1.3.1.4 ASTM C 1172 – Standard Specification for Laminated Architectural Flat Glass

1.3.1.5 ASTM C 1376 – Standard Specification for Pyrolytic and Vacuum Deposition Coatings on Flat Glass

1.3.1.6 ASTM E 1300 – Standard Practice for Determining Load Resistance of Glass in Buildings

1.3.2 Glass Association of North America (GANA).

1.3.2.1 GANA Glazing Manual

1.3.2.2 GANA Laminated Glazing Reference Manual

1.3.2.3 GANA TD-03-1003: Construction Site Protection and Maintenance of Architectural Glass

1.4 SUBMITTALS:

1.4.1 Submittal procedures and quantities are specified in Section 01 33 00.

1.4.2 Product Data: Submit manufacturer's data for each type of glazing material specified, including manufacturer's recommendations for setting and sealing materials and installations.

1.4.3 Samples: Submit factory labeled samples of each type of glazing material specified, gaskets and colors of glazing compounds for approval. No glazing material, gaskets, or glazing compounds shall be purchased until all samples have been approved.

1.4.4 Certificate of Compliance: Certify and label each product to indicate materials meet specified requirements.

1.5 DELIVERY, STORAGE AND HANDLING:

1.5.1 Maintain compliance with the applicable content of the GANA Glazing Manual, GANA Laminated Glazing Reference Manual, and GANA TD-03-1003: Construction Site Protection and Maintenance of Architectural Glass- as well as the provisions below. In cases of conflicts, the most stringent requirements shall apply.

1.5.2 Delivery: Do not deliver glass to the site until the areas to be glazed are ready to receive the glass. Deliver glass in manufacturers storage cases with interleaving between lights. Deliver glazing compound in manufacturer's original cartons with labels intact.

1.5.3 Storage: Store glass in original storage cases. Store cases in a dry, well ventilated area with temperatures maintained above the dew point. Do not store glass where it will be exposed to direct sunlight.

1.5.4 Handling: Do not unpack glass until needed for installation. Handle and install materials in a manner to prevent breakage, scratching or other damage. Keep vacuum cups free from foreign material that would scratch glass.

1.6 JOB CONDITIONS:

Do not perform glazing work when the ambient temperature is below 40 degrees F. Provide sufficient ventilation to prevent condensation from forming on surfaces to be glazed. Do not perform glazing during damp or rainy weather.

1.7 FIELD-CONSTRUCTED MOCK-UP:

1.7.1 After the Observation Level wall and roof framing/diaphragm is constructed, construct in place a corner mockup sample panel of the Type Q and Type P2 windows, full height and with a separate minimum length dimension of 4' in each direction , using proposed glass, frames, anchors, gaskets, sealants, etc.

1.7.2 Mock-up may be used as part of work if full window panel lengths are used, conforming to specified window schedule requirements, and accepted by the Resident Engineer, the Architect and Owner.

1.7.3 Accepted mock-up establishes minimum standard of quality, clear visibility, and workmanship for the glazing and aluminum frame work in this area only.

PART 2 - PRODUCTS

2.1 MATERIALS:

2.1.1 Note: Where pre-manufactured window units incorporate glazing from window manufacturer, glazing shall be provided under that separate division.

2.1.2 Annealed glass: except tempered glass, shall conform to Fed.Spec. DD-G-451D, of the types, classes and qualities specified below. Unless otherwise noted glazing shall be:

Glass Type 1: 1" dual glaze, Outside Lite; 1/4", Face #1 Clear, Face #2 Guardian SunGuard SN54 and Inside Lite; 1/4", Face #3 & #4 clear; as manufactured by Guardian Industries Corp. or approved equal. Maximum U-factor: 0.37; Maximum SHGC: 0.29.

Glass Type 2: 9/16“ Laminated with 2 plies of Pilkington OptiView Anti-Reflective Glass. ¼” OPTI-GREY #23 Annealed / .060 SGP interlayer / ¼” Clear Annealed with OptiView coating #4 surface. No substitutions allowed. Provide mitered cut edges and polished edges at all glass to glass butt joints..

Glass Type 3: Pilkington Pyrostop 60 min Interior Installation as manufactured by Pilkington Architectural Glass or approved equal.

Glass Type 4: ½” Laminated with 2 plies of float glass, Guardian Sunguard SN54 and Guardian Clear, or approved equal.. Thickness of each glass ply: 6.0 mm. and clear Interlayer Thickness: 0.060 inch (1.52 mm).

2.1.2.1 Clear Float Glass: shall conform to ASTM C 1036, Quality Q3, Class 1.

2.1.2.2 Heat treated glass shall conform to ASTM C 1048, except that overall bow shall be limited to half of the ASTM C 1048 allowance. The peak-to-valley roller wave limit shall be the more stringent of 0.005” or highest capability of the project fabricator.

2.1.2.3 Laminated glass shall conform to ASTM C 1172.

2.1.2.4 Coated glass shall conform to ASTM C 1376.

2.1.2.5 Obscure Float Glass: Not Used

2.1.2.6 Fire Rated Glass: Provide as located on plans.

2.1.2.7 Spandrel Glass: Not Used

2.1.4 Material and Design Requirements:

2.1.4.1 Maintain compliance with the applicable content of the GANA Glazing Manual and GANA Laminated Glazing Reference Manual- as well as the provisions below. In cases of conflicts, the most stringent requirements shall apply.

2.1.4.2 The glazing shall provide sufficient load resistance as required by code, and proven through ASTM E 1300 and additional analysis as necessary. The design breakage rate of nonvertical glazing shall be limited to 1 per thousand.

2.1.4.3 Center-of-glass deflections of 4-side-supported glazing shall be limited to the lesser of 3/4" or L/100, where L is the short side dimension of the glazing unit. The glazing shall be designed to remain reliably engaged under all design conditions. For glazing supported in ways other than continuously along all 4 edges, the center-of-glass deflection shall be limited as consistent with demonstrably standard practice, and the glazing shall remain reliably engaged under all design conditions.

2.1.4.4 Heat-strengthened glass shall be implemented as necessary to resist thermal stresses based upon properly-substantiated thermal stress analyses. Fully tempered glass shall be implemented where required by code. Fully tempered glass shall not be implemented for thermal stress management unless full tempering is required by other design considerations.

2.1.5 Clips for Metal Surrounds: Respective surround manufacturer's standard (steel-to-steel, aluminum-to-aluminum, etc.).

2.1.6 Sealant for Glazing:

A. General:
1. Compatibility: Provide glazing sealants that are compatible with one another and with other materials they will contact, including glass products, seals of insulating, glass units, and glazing channel substrates, under conditions of service and application, as demonstrated by sealant manufacturer based on testing and field experience.
2. Suitability: Comply with sealant and glass manufacturers' written instructions for selecting glazing sealants suitable for applications indicated and for conditions existing at time of installation.
3. Sealants (including primers) used inside the weatherproofing system, shall comply with limits for VOC content requirements of South Coast Air Quality Management District, Rule 1168, January 7, 2005.

B. Glazing Sealant: Neutral-curing silicone glazing sealant complying with ASTM C 920, Type S, Grade NS, Class 100/50, Use NT.

C. Structural Glazing Sealant: High-modulus, neutral-curing silicone glazing sealant complying with ASTM C 920, Type S, Grade NS, Class 25, Use NT.

2.1.7 Preformed Sealant Tape: Pecora "Extru-Seal", Tremco "Preshimmed 440 Tape" or equivalent, as recommended by glass manufacturer. Installed as per section 07 92 00 of these specifications.

2.1.8 Preformed Gaskets: Closed cell sponge neoprene conforming to ASTM C509. Gaskets shall be preformed to shapes and sizes to suit the glazing stops furnished with the doors and windows and to compress the sponge neoprene gasket 25% to 40%. Installed as per section 07 92 00 of these specifications. (**Gasket color to be approved by the Resident Engineer and the Architect prior to installation.)**

2.1.9 All materials in contact shall be proven aesthetically and functionally compatible over their design service lives on the project.

2.1.10 See Section 07 11 00 for window opening surrounds waterproofing.

PART 3 - EXECUTION

3.1 GENERAL REQUIREMENTS:

3.1.1 Manufacturer's labels, showing strength, grade, thickness, type and quality will be required on each piece of glass. Labels must remain on glass until it has been set, inspected and approved.

3.1.2 Sizes indicated on the drawings are approximate. Actual sizes shall be determined by measuring in the field.

3.1.3 Stops or beads for glazed openings will be provided under other sections for use under this section.

3.2 GLAZING:

3.2.1 Conform to applicable portions of the latest editions of the GANA Glazing Manual, GANA Laminated Glazing Reference Manual, and GANA TD-03-1003: Construction Site Protection and Maintenance of Architectural Glass- as well as the provisions below. In cases of conflicts, the most stringent requirements shall apply.

3.2.2 Check dimensions of openings to be sure that glass thickness is as required for code minimums and adequate clearances are maintained on all four sides at perimeter. Shop cut all glass; cut clean, straight edges, free from chips and fissures. Fixed stops, glass edges, and applied stops shall be cleaned of all dust, dirt, oil or other debris before glazing. Dry all glazing components completely.

3.2.3 Glazing shall be installed such that roller waves, if present, are oriented horizontally.

3.2.4 Aluminum Openings: Glaze with preformed gasket as supplied by the aluminum frame manufacturer.

3.3 REGLAZING: Not Used

3.4 TESTS:

All exterior glazing shall be completely watertight, and tests shall be as specified in Section 08 41 00.

3.5 CLEANING AND PROTECTION:

3.5.1 Upon completion of other glazing work and after approval of the glass installation, all glass surfaces shall be thoroughly cleaned, and all labels, paint spots and other defacements shall be removed. Contractor shall request walk through with the Resident Engineer and the Architect to identify scratched glazing prior to releasing horizontal blind subcontractors for installation. Contractor shall be responsible for all scratched glazing. Glazing to be replaced for unreasonable defects or damage as directed by the Resident Engineer and the Architect. Cleaning solution shall not etch or stain frames, painted or finished surfaces, or affect the glazing compound.

3.5.2 Cracked, broken and imperfect glass shall be replaced at no additional cost to the Owner. Protect all glass against damage from weld spatter, stains from alkaline or flourine materials, abrasive materials or other damage until final acceptance of the project. Where it is necessary to alert workmen that openings have been glazed, use tape or banners attached to framing. Do not spray paint or other foreign matter directly on the glass.

END OF SECTION 08 81 00

SECTION 08 91 00 - LOUVERS AND VENTS

PART 1 - GENERAL

1.1 RELATED DOCUMENTS:

Drawings and general provisions of Contract, including General and Supplementary Conditions and Division 1 Specification sections, apply to work of this section.

1.2 DESCRIPTION OF WORK:

1.2.1 Extent of formed sheet metal louvers and vents is indicated on drawings, including indications of sizes and locations. Louvers at FRP Doors by door manufacturer.

1.2.2 Sealants, including installation, are specified in Division 7.

1.2.3 Field-applied paint is specified in Division 9.

1.2.4 Air-handling louvers connected to ductwork are specified in Division 23.

1.2.5 Blank-off plates for air-handling louvers are specified in Division 23.

1.3 QUALITY ASSURANCE:

1.3.1 Performance Requirements: Where louvers are indicated to comply with specific performance requirements, provide units whose performance ratings have been determined in compliance with Air Movement and Control Associates (AMCA) Standard 500.

1.3.2 Comply with SMACNA: "Architectural Sheet Metal Manual" recommendations for fabrication, construction details and installation procedures, except as otherwise indicated.

1.3.3 Field Measurements: Verify size, location and placement of louver units prior to fabrication, wherever possible.

1.3.4 Shop Assembly: Coordinate field measurements and shop drawings with fabrication and shop assembly to minimize field adjustments, splicing, mechanical joints and field assembly of units. Pre-assemble units in shop to greatest extent possible and disassemble as necessary for shipping and handling limitations. Clearly mark units for reassembly and coordinated installation.

1.4 SUBMITTALS:

1.4.1 Submittal procedures and quantities are specified in Section 01 33 00.

1.4.2 Product Data: Submit manufacturer's specifications; certified test data, where applicable; and installation instructions for required products, including finishes.

PART 2 - PRODUCTS

2.1 ACCEPTABLE MANUFACTURERS:

2.1.1 Available Manufacturers: Subject to compliance with requirements, manufacturers offering products which may be incorporated in the work include, but are not limited to, the following:

Airline Products Co.
The Airolite Co.
American Warming and Ventilating Co.
Construction Specialties, Inc.
Industrial Louvers, Inc.
Ruskin Mfg. Co.
All-Lite Co.
American Abrasive Metals Co.
Reliable Metal Products

2.2 MATERIALS:

2.2.1 Galvanized Sheet Steel: ASTM A 526 and A 527, with ASTM A 525, G90 zinc coating, mill phosphatized.

2.2.2 Fastenings: Use same material as items fastened, unless otherwise indicated. Fasteners for exterior applications may be hot-dip galvanized, stainless steel or aluminum. Provide types, gages, and lengths to suit unit installation conditions. Use Phillips flat-head machine screws for exposed fasteners, unless otherwise indicated.

2.2.3 Anchors and Insets: Use non-ferrous metal or hot-dip galvanized anchors and inserts for exterior installations and elsewhere as required for corrosion resistance. Use steel or lead expansion bolt devices for drilled-in-place anchors. Furnish inserts, as required, to be set into concrete or masonry work.

2.2.4 Bituminous Paint: SSPC-Paint 12 (cold-applied asphalt mastic).

2.3 FABRICATION, GENERAL:

2.3.1 Provide louvers and accessories of design, materials, sizes, depth, arrangement, and metal thickness indicated, or if not indicated, as required for optimum performance with respect to airflow; water penetration; air leakage, where applicable (for adjustable units, if any); strength; durability; and uniform appearance.

2.3.2 Fabricate frames including integral sills to suit adjacent construction with tolerances for installation, including application of sealants in joints between louvers and adjoining work.

2.3.3 Include supports, anchorages, and accessories required for complete assembly.

2.3.4 Provide vertical mullions of type and at spacings indicated but not further apart than recommended by manufacturer or 72" o.c., whichever is less. At horizontal joints

between louver units provide horizontal mullions except where continuous vertical assemblies are indicated.

2.3.5 Provide sill extensions and loose sills made of same material as louvers, where indicated, or required for drainage to exterior and to prevent water penetrating to interior.

2.3.6 Join frame members to one another and to stationary louver blades by welding, except where indicated otherwise or where field bolted connections between frame members are made necessary by size of louvers. Maintain equal blade spacing, including separation between blades and frames at head and sill, to produce uniform appearance.

2.4 STATIONARY FORMED SHEET METAL LOUVERS:

2.4.1 Horizontal Drainable Blade Louvers: Units designed to collect and drain water to exterior at sill by means of gutters on front edges of louver blades and channels in jambs and mullions; of depth and sizes indicated, fabricated from the following metal:

Galvanized steel: Not less than 16 gauge.

Aluminum: Not less than 14 gauge.

Stainless steel: Not less than 18 gauge.

2.4.2 Louver Screens:

2.4.2.1 Fabricate screen frames of same metal and finish as louver units to which secured, unless otherwise indicated. Provide re-wireable frames consisting of formed or extruded metal with a driven spline or insert for securing screen mesh. Frame shall consist of U-shaped metal for permanently securing screen mesh.

2.4.2.2 Use insect screens where indicated of 18" x 16" mesh, 0.011" aluminum wire. Locate screens on inside face of louvers, unless otherwise indicated. Secure screens to louver frames with machine screws, spaced at each corner and at 12" o.c. between.

2.5 METAL FINISHES:

2.5.1 General: Comply with NAAMM "Metal Finishes Manual" for finish designations and application recommendations, except as otherwise indicated. Apply finishes in factory after products are assembled. Protect finishes on exposed surfaces with protective covering, prior to shipment. Remove scratches and blemishes from exposed surfaces which will be visible after completing finishing process. Provide colors or color matches as indicated or, if not otherwise indicated, as selected by the Resident Engineer and the Architect from manufacturer's standard colors.

2.5.2 Ferrous Metal Finishes:

2.5.2.1 Preparation: Clean surfaces of dirt, grease and loose rust or mill scale, including items fabricated from galvanized steel, if any. Apply finish to surfaces of fabricated and assembled units, whether exposed or concealed when installed, after pre-treating with a conversion coating suited to organic coating applied over it.

2.5.2.2 Factory-primed Finish: Where painting after installation is indicated (not work of this section) apply air-dried primer immediately following cleaning and pretreatment.

PART 3 - EXECUTION

3.1 PREPARATION:

Coordinate setting drawings, diagrams, templates, instructions and directions for installation of anchorages which are to be embedded in concrete or masonry construction. Coordinate delivery of such items to the project site.

3.2 INSTALLATION:

3.2.1 Locate and place louver units plumb, level and in proper alignment with adjacent work.

3.2.2 Use concealed anchorages wherever possible. Provide brass or lead washers fitted to screws where required to protect metal surfaces and to make a weather-tight connection.

3.2.3 Form tight joints with exposed connections accurately fitted together. Provide reveals and openings for sealants and joints fillers, as indicated.

3.2.4 Repair finishes damaged by cutting, welding, soldering and grinding operations required for fitting and jointing. Restore finishes so there is no evidence of corrective work. Return items, which cannot be refinished in the field to shop, make required alterations, and refinish entire unit, or provide new units, at Contractor's option.

3.2.5 Protect galvanized and non-ferrous metal surfaces from corrosion or galvanic action by application of a heavy coating of bituminous paint on surfaces which will be in contact with concrete, masonry or dissimilar metals.

3.2.6 Provide concealed gaskets, flashings, joint fillers and insulations, and install as work progresses to make installations weather-tight.

3.2.7 Refer to Division 7 sections for sealants in connection with installation of louvers.

END OF SECTION 08 91 00

SECTION 09 06 00 – INTERIOR + EXTERIOR COLOR AND MATERIAL SCHEDULE

General Notes:

1. Colors, finishes and materials selected do not relieve the Contractor's responsibility to provide required shop-drawings, samples and paint draw-downs.

2. Provide required field mock-ups and sample brush-outs per specifications.

Interior

Floor:

F1: Exposed Concrete: Typical Floor: Smooth trowel concrete, sealed.

F2: Porcelain Tile (shower floors): Manufacturer: *daltile*, Product: Spark (full body porcelain tile), Color: Smoky Glimmer #SK53, Size: 1"x2" mosaic (mesh mounted in 11 5/8" x 11 5/8" sheets), Pattern: Grid, Grout: Manufacturer: *Mapei*, Type: Epoxy, Color: Pewter #02

Wall:

W1: Typical Wall: Sealed Colored Cast-in-place concrete walls

W2: Typical Wall: Sealed Exposed CMU walls Manufacturer: RCP Block, Color: Castle Gray, texture - heavy sandblast in the field all exposed surfaces (provide sample for the Resident Engineer and the Architects approval prior to commencing work).

W3: Typical painted Moisture and Mold Resistant gypsum drywall: Gypsum board per *Finish Legend:* Finish: Level 4, Paint: To match *Frazee* "Shoal" #CL3234D, Finish: Eggshell

W3A: Observation Level painted Moisture and Mold Resistant gypsum drywall - Color: Gypsum board per *Finish Legend*: Finish: Level 4, Paint: To match *Frazee* "Blacktop" #CL 3237N, Finish: Eggshell

W4: Full height tile wall: Manufacturer: *daltile*, Product: Wall Tile, Color: "Suede Gray" #0182, Size: 6"x8", Pattern: Vertical Grid (6" wide x 8" tall), Utilize *daltile* Sanitary Cove Topset Base - slim foot for concrete floors #3619TN. Cut off top 1" of bullnose top to make square corner to butt to 6x8 field tile. Miter outside corners of base and wall tiles. Grout: Manufacturer: *Mapei*, Type: Epoxy, Color: Pewter #02.

W4A: Accent Color Full height tile wall: Manufacturer: *daltile*, Product: Wall Tile, Color: "Aqua Glow" #0197, Size: 6"x8", Pattern: Vertical Grid (6" wide x 8" tall), Utilize *daltile* Sanitary Cove Topset Base - slim foot for concrete floors #3619TN. Cut off top 1" of bullnose top to make square corner to butt to 6x8 field tile. Miter outside corners of base and wall tiles. Grout: Manufacturer: *Mapei*, Type: Epoxy, Color: Pewter #02.

W5: 60” Height FRP: Manufacturer: Nudo Products, Inc., Color: Silver #LP-F9, Surface: Textured

Ceiling:

C1: Exposed Concrete Structure*:* Sealed

C2: Typical Ceiling Moisture and Mold resistant Gypsum board per *Finish Legend:* Finish: Level 4, Paint: To match *Frazee* "Placid" #CL 3231W, Finish: Eggshell C2A: Observation Level Viewing Area Ceiling Moisture and Mold resistant Gypsum board per *Finish Legend:* Finish: Level 4, Paint: To match *Frazee* "Blacktop" #CL 3237N Finish: Eggshell

C3: Acoustical Panel Ceiling: : Manufacturer: *Tectum Inc*, Standard Tectum Panel, Thickness: 1 1/2", Size" 23 3/4" x 96", Edge Detail: Beveled, Paint: To match *Sherwin Williams* "Hopsack" #SW 6109, Finish: Flat. See Reflected Ceiling Plan for layout.

C4: Acoustical Ceiling Tile: Manufacturer: *Armstrong*, Product: Clean Room, Type: 15/16" Square Lay-in #1715, Size: 24"x24", Suspension System: 15/16" Prelude

Cabinet:

CA1: Counter Top: Material: 14 gage stainless steel (backsplash to match) Upper/Lower Cabinet Face: Manufacturer: *Pionite*, Pattern: "Appears Likatre" #WP115 Suede.

CA2: Counter Top: Material: Solid Surface Quartz, Manufacturer: *Silestone*, Product: Mountain Mist, Finish: Leather

CA3: Counter Top: Material: Solid Surface Quartz, Manufacturer: *Silestone*, Product: Mountain Mist, Finish: Leather

Upper/Lower Cabinet Face: Manufacturer: *Pionite*, Pattern: "Appears Likatre" #WP115 Suede.

Window Covering:

WC1: Roller Shade 1: Hardware Manufacturer: *RollEase, Inc*, Shade Material: Manufacturer: *Phifer, Inc.,* Product: Sheerweave Brand Fabric fabric #4600 (3% open), Color: "Pewter #v07..

WC2: Roller Shade 2: Hardware Manufacturer: *RollEase, Inc*, Shade Material: Manufacturer: Plastic-View ATC, Inc., Product: PLASTIC-VIEW ATC Mylar transparent shade material, Color: Triplex Eclipse, Canopy: recessed. Contact: 4585 Runway St., Suite B | Simi Valley, CA 93063 USA. Phone (805) 520-9390 | Fax (805) 520-0260, Ryan Voges, General Manager of PV-128 Operations, ryan@pvatc.com

Toilet Partition:

TP1: Manufacturers; Bradley, Product: Bradmar Solid Plastic (HDPE), Series: Sentinel #400, Color: : "Linen" #M242

Lockers:

Manufacturer: Bradley, Material: Solid Plastic, Product: Lenox - XL Locker, Color: : "Linen" #M242

Interior Signage**:**

IS1: Plastic Laminate: Manufacturer: *Pionite*, Product: “Mellow Marron” #AT965 Suede, Lettering/Applique: Manufacturer: Rowmark, LLC, Color: Parchment

Door Hardware:

Brushed Chrome

Fiberglass Door/Frame System:

Factory colored: To match *Frazee* "Blacktop" #CL 3237N

Aluminum window Frame System:

Aluminum Kynar Painted: To match *Frazee* "Blacktop" #CL 3237N

Hollow Metal Window/Door Frame System:

Painted: To match *Frazee* "Blacktop" #CL 3237N, Finish: Semi-gloss

Electrical Outlets & Switches/Cover Plate:

Stainless Steel cover plate with Decora black switches and outlets

Handrails:

Paint: To match *Frazee* "Blacktop" #CL 3237N, Finish: Semi-Gloss

Exterior

Cast-in-Place Concrete:

Smooth Finish with clear sealer, Concrete for all building interior and exterior walls and floor/ceilings shall be , Davis Colors, color: Outback.-, or approved equal, to match standard Davis Color sample - as the Resident Engineer and the Architects Control Sample.

Precast/Cast-off-Site Concrete (Public Art Wall):

Smooth Finish with clear sealer, Concrete shall be , Davis Colors, color: Outback.-, or approved equal, to match standard Davis Color sample - as the Resident Engineer and the Architects Control Sample.

Soffits:

Painted: To match *Frazee* "Blacktop" #CL 3237N, Finish: Matt.

PVC Membrane Roofing:

Manufacturer: Sarnafil Adhered System Finish Color: Light Gray

Storefront Window System/Louvers:

Anodized Aluminum Painted: Kynar painted to match *Frazee* "Blacktop" #CL 3237N

Door Hardware:

Brushed Chrome

Fiberglass Door/Frame System:

Factory colored: To match *Frazee* "Blacktop" #CL 3237N

Sealant:

Sealant #1,2,3,4,5,6,7,8 - To Match adjacent color

Roll-Up Garage doors:

Powder Coating Finish: Color as selected by the Resident Engineer and the Architect from manufacturer's standard colors.

Translucent Resin Panel First Aid Cross Symbol:

Manufacturer: *3form*, 1/2" koda XT, Color: Cranberry, Front Finish: Patent, Back Finish: Stucco

Slate Panels at freestanding wall

Smooth solid slate - Color: Black

END OF SECTION 09 06 00

SECTION 09 29 00 - GYPSUM DRYWALL

PART 1 - GENERAL

1.1 RELATED DOCUMENTS AND DESCRIPTION OF WORK:

The work includes the furnishing and installing of gypsum board construction (walls and ceilings), including shaft wall construction, all other accessories as shown and noted on the drawings and specified herein. The Conditions of the Contract and Division 1 apply to this section as fully as if repeated herein.

1.2 QUALITY ASSURANCE:

1.2.1 Gypsum board construction shall conform with the "**California Building Code, current edition (CBC)",** Chapter 25 "Gypsum Board and Plaster". Fire resistive walls, partitions and ceilings shall also conform to Chapter 7, "Fire Resistant Materials and Construction."

1.2.2 Fire and Sound Resistance Ratings: Where gypsum drywall systems with fire and/or sound-resistance ratings are indicated, provide materials and installations which are identical with those of applicable assemblies. Fire systems shall be tested per ASTM E 119 by fire testing laboratories acceptable to authorities having jurisdiction. Sound tests shall be tested accordance with ASTM E90 and ASTM E413

1.2.3 Single-Source Responsibility: Obtain gypsum board products from a single manufacturer, or from manufacturers recommended by the prime manufacturer of gypsum boards.

1.3 SUBMITTALS:

1.3.1 Submittal procedures and quantities are specified in Section 01 33 00.

1.3.2 Product Data: Submit manufacturer's product specifications and installation instructions for each gypsum board component, including other data as may be required to show compliance with these specifications.

1.4 DELIVERY, STORAGE AND HANDLING:

1.4.1 Deliver material in original packages, containers or bundles bearing brand name and identification of manufacturer or supplier. Fire resistant type gypsum board shall bear the Underwriter's Laboratories, Inc. (UL) label or label of another organization acceptable to Code Authority. (ICBO, Etc)

1.4.2 Store materials inside under cover and in manner to keep them dry, protected from weather, direct sunlight, surface contamination, corrosion, and damage from construction traffic and other causes. Neatly stack gypsum boards flat to prevent sagging. Do not stack long lengths over shorter lengths. Do not stack gypsum board to exceed design live load of floors above the ground floor.

1.4.3 Handle gypsum boards to prevent damage to edges, ends, or surfaces. Protect metal

corner beads and trim from being bent or damaged.

1.4.4 Store flammable adhesives away from fire, sparks, or smoking areas.

1.5 PROJECT CONDITIONS:

Maintain temperature range between 55 degrees F and 70 degrees F for a period extending from 24 hours before installation until the permanent heating system is in operation. Provide ventilation during and following adhesive and joint treatment application. Use temporary air circulators in enclosed areas lacking natural ventilation.

1.6 SCHEDULING:

Do not apply gypsum board until insulation, pipes, conduits, ducts, vents, supports and other items that will be concealed by the gypsum board have been inspected, tested and approved by the governing authorities and unsatisfactory conditions have been corrected.

1.7 SAMPLE:

Prior to finishing gypsum board where painting is indicated, provide four 2'x2' samples of **all** finishes to be selected by the Resident Engineer and the Architect. Selected sample shall be kept at job site for comparison. Final wallboard finish shall match selected sample. See Division 2 for finish required.

PART 2 - PRODUCTS

2.1 MATERIALS:

2.1.1 Gypsum board shall conform to the standards specified below:

2.1.1.1 Regular Gypsum Board: ASTM C 1396 with tapered edges, 5/8" thick for ceilings and walls unless otherwise indicated. USG FIRECODE 30

2.1.1.2 Fire Retardant Gypsum Board: ASTM C1396, Type X or Type x as required for the sound and fire rated design, with tapered edges, 5/8" thick unless otherwise indicated. USG FIRECODE X, FIRECODE C, or ULTRALITE X

2.1.1.3 Water and Mold Resistant Gypsum Board: ASTM C1396 with tapered edges, 5/8” shall score a 10 in accordance with ASTM D3273. Use 1/2" thick unless otherwise indicated. USG SHEETROCK Mold Tough.

2.1.1.4 Exterior Gypsum Ceiling Board: ASTM C1396, Type X, weather and sag resistant with water repellant face paper and tapered edges, 5/8" thick, for ceilings at protected exterior soffits unless otherwise noted on the drawings. USG Exterior Ceiling Board.

2.1.1.5 Finish: Section 3.4.1.5.

2.1.2 Trim Accessories: Provide manufacturer's standard paper faced trim accessories of types indicated for gypsum board work, formed of galvanized steel with paper face

reinforcement to prevent edge cracking unless otherwise indicated,. Provide (90° square - typical) corner beads, L-type edge trim-beads, U-type edge trim-beads, special L-kerf-type edge trim-beads and one-piece control joint beads, J-type moulding reveals and other trim as shown in drawings. Contractor shall utilize prefabricated intersecting reveal joints when metal trim reveal joint patterns intersect. Provide manufacturer's 30 year warranty against edge cracking.

2.1.2.1 Corner bead reinforcement shall be USG Paper faced metal outside corner, B1 XW EL manufactured by U. S. Gypsum Co. or prior approved equal.

2.1.2.2 Metal Reinforcement Trim accessories shall be USG Paper faced metal L-Trim and J-Trim, B4, B9 as manufactured by U. S. Gypsum Co. or prior approved equal.

2.1.3 Joint Treatment Materials:

2.1.3.1 General: ASTM C 475; type recommended by the manufacturer for the application indicated, except as otherwise indicated.

2.1.3.2 Joint Tape: USG Heavy Duty paper tape meeting ASTM C475

2.1.3.3 Joint Compound: , USG Ready-Mixed joint compounds except for areas subject to moisture after installation and exterior ceiling board..

2.1.3.4 Water/Mold-Resistant Joint Compound: For areas subject to moisture after installation and exterior ceiling board, use chemical setting type joint compound, USG Light-Weight Setting Compound, Easy Sand.

2.1.3.5 Acoustical sealant: USG Acoustical Sealant

2.1.3.6 Skim Coat material: USG All-Purpose Joint compound

2.1.3.7 Drywall Primer: USG SHEETROCK First Coat (For Exterior Board use Exterior Primer).

2.1.3.8 Control joints: CEMCO 093 control joint

2.1.4 F.R.P. Board: ASMT D-543 shall be 4'-0" wide panels. See 09 06 00 for product information. Contractor shall utilize manufacturer's PVC molding accessories and adhesives in joints and corners.

PART 3 - EXECUTION

3.1 INSPECTION:

Before applying gypsum board, see that corners and framing are plumb, true and solid, and that framing members are properly spaced. Edges and ends of board shall have solid bearing.

3.2 INSTALLATION OF GYPSUM BOARD:

3.2.1 Applications: Use water and mold resistant gypsum board within toilet rooms, at all ceramic tile, and elsewhere as indicated. Use fire retardant gypsum board where indicated or required to achieve fire rated partitions and ceilings.

3.2.2 General: Install in accordance with fire and sound rated design and ASTM C840 Use gypsum board of maximum practicable lengths to minimize end joints. Locate exposed end-butt joints as far from center of walls and ceilings as possible, and stagger not less than 1'-0" in alternate courses of board. Generally hold boards ¼" – ½" above finish concrete slab.

3.2.2.1 Install exposed gypsum board with face side out. Do not install imperfect, damaged or damp boards. Butt boards together for a light contact at edges and ends with not more than 1/16" open space between boards. Do not force into place.

3.2.2.2 Locate either edge or end joints over supports, except in horizontal applications or where intermediate supports or gypsum board back-blocking is provided behind end joints. Position boards so that like edges abut, tapered edges against tapered edges and mill-cut or field-cut ends against mill-cut or field-cut ends. Do not place tapered edges against cut edges or ends. Stagger vertical joints over different studs on opposite sides of partitions.

3.2.2.3 Attach gypsum board to supplementary framing and blocking provided for additional support at openings and cutouts.

3.2.2.4 Form control joints and expansion joints with space between edges of boards, prepared to receive trim accessories. Maintain the fire and sound rating of the assembly at control joints.

3.2.2.5 Isolate perimeter of non-load-bearing gypsum board partitions at structural abutments. Provide 1/4" to 1/2" space and trim edge with J-type semi-finishing edge trim. Seal joints with acoustical sealant.

3.2.2.6 Space fasteners in gypsum boards in accordance with referenced standards and manufacturer's recommendations, except as otherwise indicated.

3.2.3 Methods of Gypsum Board Application:

3.2.3.1 Single-layer Application: Install gypsum wallboard:

On ceilings apply gypsum board prior to wall/partition board application to the greatest extent possible.

On partitions/walls apply gypsum board vertically (parallel), unless otherwise indicated, and provide sheet lengths which will minimize end joints.

On partitions/walls 8'-1" or less in height apply gypsum board horizontally (perpendicular); use maximum length sheets possible to minimize end joints.

3.2.3.2 Wall Tile Base: Where gypsum board is base for thin-set ceramic tile and similar rigid applied wall finishes, install water and mold resistant gypsum backing board. Apply with uncut long edge at bottom of work, and space 1/4" above fixture lips. Seal ends, cut edges and penetrations of each piece with water-resistant adhesive or, where recommended by manufacturer, with water-resistant joint compound.

3.2.3.3 Double-layer Application: When fire rating is not required, install base layer with adhesive for contact bonding in addition to screws for the exposed gypsum board for face layer. On partition/walls apply base layer and face layers vertically (parallel) with joints of base layer over supports and face layer joints offset at least 10" in each direction with base layer joints. See rated assemblies in manufacturer's literature to conform with fire rated requirements per Uniform Building Code.

3.2.3.4 Single-Layer Fastening Methods: Fasten gypsum boards to supports with screws.

3.2.3.5 Gypsum board surfaces shall appear flat, smooth, and monolithic..

3.3 INSTALLATION OF GYPSUM BOARD TRIM ACCESSORIES:

3.3.1 General: Install per the ASM C840 and in accordance with manufacturer's instructions and recommendations. All beads and trim shall be placed level and plumb. Generally hold trim accessories ¼" – ½" above finish concrete slab. Installations to qualify for 30 year warranty are installed with all-purpose joint compound and no fasteners.

3.3.2 Install paper faced metal corner beads at all external corners of drywall work.

3.3.3 Install paper faced metal edge trim whenever wallboard terminates against dissimilar materials or edge of gypsum board would otherwise be exposed or semi-exposed, and except where plastic trim is indicated. Provide type with face flange to receive joint compound except where semi-finishing type is indicated. Install L-type trim where work is tightly abutted to other work, and install special kerf-type where other work is kerfed to received long leg of L-type trim. Install U-type trim where edge is exposed, revealed, gasketed, or sealant-filled (including expansion joints). Install "J"-type trim in appropriate industry standard and/or as called for in drawings.

3.4 INSTALLATION OF GYPSUM BOARD FINISHING:

3.4.1 General: Apply treatment at **all** gypsum board joints (both directions and above finish ceilings as occurs), flanges of trim accessories, penetrations, fastener heads, surface defects and elsewhere as required to prepare work for decoration. Pre-fill open joints and rounded or beveled edges, if any, using type of compound recommended by manufacturer.

3.4.1.1 Apply joint tape at joints between gypsum boards, except where a trim accessory is indicated. Joining Panels: Apply thin uniform layer of

compound, approximately 3" wide, under and over the non-adhesive tape in the joint (angle) to be reinforced. Center tape over all joints to be reinforced and seal into the compound. Apply skim coat of compound immediately over tape. Clean excess compound from wallboard surface. Allow joints to dry thoroughly (24hrs. minimum) between each application of compound. Cover skim coat with another compound coat spread evenly over and slightly beyond the taped edge of the board, feather the edges, with smooth uniform slight crown over joint.

3.4.1.2 All panel joints and dimples at fastener heads shall receive 3 coats of compound in succession,

3.4.1.3 Conceal flanges of all metal corners and edge reinforcing by at least 2 coats of compound. When completed, the compound shall gently feather and extend approximately 8" - 10" on either side of exposed metal nosing.

3.4.1.4 Sand all coats as necessary after each application has dried. The final coat and subsequent sanding shall leave all wallboard and treated areas uniformly smooth and ready to receive decoration.

3.4.1.5 Exterior Ceiling board and wall board finish shall generally be Level #4 and match sample selected by the Resident Engineer and the Architect. Level 4 shall include a uniform coat of drywall primer roller applied over the entire surface. Level 5 shall include a skim coat of all-purpose joint compound over the entire surface and a uniform coat of drywall primer roller applied over the entire surface.

3.4.2 Water and Mold Resistant Gypsum Board Base for Ceramic Tile: Treat joints and fasteners to comply with directions of water-resistant joint compound manufacturer.

3.4.2.1 In areas to be tiled, treat fastener heads with water-resistant joint compound. Fill tapered edges in gypsum panels with water-resistant joint compound, embed joint tape firmly and wipe off excess compound; follow immediately with a second coat of water-resistant joint compound over taping coat, being careful not to crown the joint, as defined by the Gypsum Association as a Level 2 finish. Fold and embed tape in all interior angles to form true angles.

LEVELS OF GYPSUM BOARD FINISH

Each level of finish is, the minimum level of finish as described

Level	Joints	Interior Angles	Accessories	Fasteners	Surface
#0	No taping, finishing or accessories required.				
This level of finish may be useful in temporary construction or whenever the final decoration has not been determined.					

Level	Joints	Interior Angles	Accessories	Fasteners	Surface
#1	Tape set in joint compound	Tape set in joint compound.			Tool marks and ridges acceptable. Surface free of excess joint compound.

Specified in plenum areas above ceilings, in attics, where the assembly would generally be concealed, or in building service corridors and other areas not normally open in public view. Some degree of sound and smoke control is provided; this level is referred to as "fire-taping." Where a fire-resistance rating is required for the gypsum-board assembly, details of construction shall be in accordance with reports of fire tests of assemblies that have met the fire-rating requirement. Tape and fastener heads need not be covered with joint compound.

Level	Joints	Interior Angles	Accessories	Fasteners	Surface
#2	Tape embedded in joint compound and wiped with a joint knife, leaving a thin coat of compound over tape.	Tape embedded in joint compound and wiped with a joint knife, leaving a thin coat of compound over tape.	Shall be covered by one separate coat of joint compound.	Shall be covered by one separate coat of joint compound.	Surface shall be free of excess joint compound. Tool marks and ridges acceptable. Joint compound applied over the body of the tape at the time of tape embedment shall be considered a separate coat of joint compound and shall satisfy the conditions of this level.

Specified where water-resistant gypsum backing, board (ASTM C630) is used as a substrate for tile. May also be specified in garages, warehouse storage or other similar areas where surface appearance is not of primary concern.

Level	Joints	Interior Angles	Accessories	Fasteners	Surfaces
#3	Tape as in Level #2, then covered with one separate coat of joint compound.	Tape as in Level #2, then covered with one separate coat of joint compound.	Shall be covered by two separate coats of joint compound.	Shall be covered by two separate coats of joint compound.	Joint compound shall be smooth and free of tool marks and ridges. Prior to texturing the prepared surface be coated with roller applied drywall primer

Typically specified in appearance areas which are to receive heavy-or medium-texture (spray or hand-applied) finishes before final painting, or where heavy-grade wall coverings are to be applied as the final decoration. This level of finish is not recommended where smooth painted surfaces, or light-to medium-weight wall coverings are specified.

Level	**Joints**	**Interior Angles**	**Accessories**	**Fasteners**	**Surfaces**
#4	Tape as in Level #2, then covered with two separate coats of joint compound.	Tape as in Level #2, then covered with one separate coat of joint compound.	Shall be covered by three separate coats of joint compound.	Shall be covered by three separate coats of joint compound.	Joint compound shall be smooth and free of tool marks and ridges. The prepared surface be coated with a roller applied drywall primer prior to the application of final finishes including paint. See painting and wall covering specifications.

This level should be specified where flat paints, light textures or wallcoverings are to be applied. In critical lighting areas, flat paints applied over light textures tend to reduce joint photographing. Gloss, semi-gloss and enamel paints are not recommended over this level of finish. The weight, texture and sheen level of wallcoverings applied over this level of finish should be carefully evaluated. Joints and fasteners must be adequately concealed if the wallcovering material is lightweight, contains limited pattern, has a gloss finish or any combination of these features is present. Unbacked vinyl wallcoverings are not recommended over this level of finish.

Level	**Joints**	**Interior Angles**	**Accessories**	**Fasteners**	**Surfaces**
#5	Tape as in Level #2, then covered with two separate coats of joint compound.	Tape as in Level #2, then covered with one separate coat of joint compound.	Shall be covered by three separate coats of joint compound.	Shall be covered by three separate coats of joint compound.	A thin skim coat of joint compound shall be applied to the entire surface. The surface shall be smooth and free of tool marks and ridges. The prepared surface be coated with a drywall primer prior to the application of final finishes including paint. See painting specification.

This level of finish is highly recommended where gloss, semi-gloss, enamel or non-textured flat paints are specified, or where severe lighting conditions occur. This highest-quality finish is the most effective method to provide a uniform surface and minimize the possibility of joint photographing and of fasteners showing through the final decoration.

3.4.3 Refer to sections on painting, sealants, caulking, coatings and wall coverings in Division 9 for decorative finishes to be applied to all gypsum board work.

3.5 INSTALLATION OF F.R.P. BOARD:

3.5.1 Install products per manufacturer's literature. Lay panels on a flat dry surface minimum of 24 hrs. to become acclimated.

3.5.2 Cut and drill panels in advance 1/8" oversized for fasteners. Spread adhesive by Trowel over entire panel. Press from the center outward making sure there is full contact with clean dry wall surface below. Leave gaps around all edges per literature.

3.5.3 Fasten at top and bottom of each panel.

3.5.4 Precut match molding. Apply a silicone sealant in channel. Press against edge of panel then pull back 1/8" to leave room for expansion.

3.6 CLEAN UP:

Upon completion of the work, remove from adjacent surfaces, overspray, splatter and drops of taping and finish compound, and textured finishes. Remove tools, equipment, unused material and cuttings and leave the work in a clean, orderly manner.

3.7 PROTECTION OF WORK:

Provide final protection and maintain conditions, in a manner suitable to installer, which ensures gypsum drywall work being without damage or deterioration at time of substantial completion.

END OF SECTION 09 29 00

SECTION 09 30 00 - TILE

PART 1 - GENERAL

1.1 RELATED DOCUMENTS AND DESCRIPTION OF WORK:

1.1.1 Related Work: Documents affecting work of this section include, but are not necessarily limited to, General Conditions, Supplementary Conditions, and sections in Division 1 of these specifications.

1.1.2 Work Included: Provide tile where called for on the drawings, as specified herein, and as needed for a complete and proper installation including, but not necessarily limited to:

1.1.2.1 Floors and paving.

1.1.2.2 Toilet rooms, shower floors and walls.

1.1.2.3 Membranes.

1.1.2.4 Expansion joints.

1.2 QUALITY ASSURANCE:

1.2.1 Use adequate number of skilled workmen who are thoroughly trained and experienced in the necessary crafts and who are completely familiar with the specified requirements and the methods needed for proper performance of the work of this section.

1.2.2 Applicable Standards: The following publications of the issues listed below, but referred to thereafter by basic designation only, form a part of this specification to the extent they are specified herein. Unless otherwise specified, use the latest edition.

1.2.2.1 Ceramic Tile: The Installation Handbook, the most current edition (herein referred to as TCA Handbook).

1.2.2.2 American National Standard Specifications for the Installation of Ceramic Tile (herein referred to as ANSI).

1.2.3 Pre-Tiling Meeting:

1.2.3.1 Prior to commencing the work of this section, the contractor shall schedule and attend a meeting at the job site to discuss conformance with requirements of the Contract Documents. Request attendance of representatives from the Resident Engineer and the Architect, Contractor, subcontractors (applicable if lath and plastering contractor and/or sealant and expansion joint contractor are contracted separately from the tile contract), and other parties who are involved.

1.2.4 Blending:

1.2.4.1 Require the tile manufacturer to blend tiles at the factory.

1.2.4.2 Provide additional blending at the job site to secure the Resident Engineer and the Architect's approval.

1.3 SUBMITTALS:

1.3.1 Submittal procedures and quantities are specified in Section 01 33 00.

1.3.1.1 Submit samples and/or manufacturer's specifications and other data needed to prove compliance with the specified requirements for:

1.3.1.1.1 Tile\stone.

1.3.1.1.2 Membrane.

1.3.1.1.3 Sealants and expansion joints.

1.3.1.1.4 Grout.

1.3.1.1.5 Expanded metal lath and wire reinforcing.

1.3.1.1.6 Fasteners.

1.3.1.1.7 Setting materials.

1.3.1.2 Upon completion of the work of this section, deliver to the Owner additional tile and trim shapes of each type, color, pattern, and size used in the work for the Owner's use in replacement and maintenance, at the rate of 3% of the amount used in the work, packaged securely to prevent damage and clearly labeled.

1.3.1.3 Shop Drawings: Submit shop drawings showing areas to be tiled, extent of each type of tile, tile pattern and location of all expansion joints.

PART 2 - PRODUCTS

2.1 TILE:

2.1.1 See Section 09 06 00 for product specification.

2.1.2 Edge Protection:

2.1.2.1. Provide Schluter – SCHIENE extruded profile edge protection at all stone/tile to carpet transitions and at all stone/tile exposed edge/end conditions. Finish to be Type E-stainless steel unless otherwise specified.

2.1.2.2 Provide Schluter – Rondec, Dilex, and Jolly extruded profile edge/nosing protection at all stone/tile shower curbs per details. Finish to be Type E-

stainless steel unless otherwise specified.

2.2 INSTALLATION MATERIALS:

2.2.1 Waterproof Membrane and Crack-Isolation Membrane:

2.2.1.1 Provide waterproof membrane at all sills and bathroom floors.

a. (Basis): Custom Building Products RedGard waterproof/crack isolation membrane.

b. (Equal): Laticrete International Laticrete Hydro Ban waterproof/crack isolation membrane.

c. (Equal): MAPEI Mapelsatic 400 waterproof/crack isolation membrane.

2.2.1.2 Provide 4 mil. polyethylene sheeting conforming to ASTM C171 or 15 pound asphalt saturated felt complying with ASTM D226 at all tile lines walls and vertical surfaces.

2.2.1.3 Crack-Isolation Membrane:

2.2.1.4 (Basis): Custom Building Products RedGard waterproof/crack isolation membrane.

2.2.1.5 (Equal): Laticrete International Laticrete Hydro Ban waterproof/crack isolation membrane.

2.2.1.6 (Equal): MAPEI Mapelsatic 400 waterproof/crack isolation membrane.

2.2.2 Metal Lath and Welded Wire Fabric Reinforcement:

2.2.2.1 Metal lath at exterior walls, provide galvanized or painted expanded metal lath 3.4 pounds per square yard. Do not use rib lath.

2.2.2.2 Welded wire reinforcing fabric for floors, provide 2" x 2" mesh of 16/16 gauge wire conforming to ASTM A185.

2.2.3 Cleavage Membrane:

Not applicable for method F113-87.

2.2.4 Expansion Joints and Sealants:

2.2.4.1 Sealants in non-trafficked areas, provide non-sag silicone sealant conforming to Federal Specifications TT-S-01543a.

2.2.4.2 (Basis): Custom Building Products 100% Silicone Caulk

2.2.4.3 (Equal): Laticrete International Latasil 100% Silicone Sealant

2.2.4.4 (Equal): MAPEI Mapesil LM 100% Silicone Sealant.

2.2.4.5 Sealants in trafficked areas, provide Type I or Type II two-component sealant conforming to Federal Specifications TT-S-00227e. Shore A hardness of 35 or greater.

2.2.4.6 (Basis): Custom Building Products 100% Silicone Caulk
2.2.4.7 (Equal): Laticrete International: Latasil 100% Silicone Sealant

2.2.4.8 (Equal): MAPEI Mapesil LM 100% Silicone Sealant.

2.2.4.9 Backer for sealant where needed, provide closed cell polyethylene foam weighing not less than 2.7 pounds per cubic foot and in dimension approximately 20% thicker than width of the expansion joint in which used.

2.2.5 Materials for mortar bed methods and bonding mortars:

2.2.5.1 Setting Materials:

FLEXIBLE POLYMER MODIFIED PORTLAND CEMENT MORTAR: Consisting of two components - liquid polymer additive and dry-set mortar - conforming to ANSI A118.4 with the polymer having the following characteristics:

Polymer category:	Acrylic Copolymer
Solids Content(5):	28.0 - 32.0
pH:	4.0 - 5.0
Specific gravity: (water-1)	1.026

Glass transition temperature (degrees F):-4

Particule size (um):	0.25 - 0.35

"Acceptable Manufacturers" list:

a. (Basis): Custom Building Products ProLite polymer modified thin set/medium bed mortar

b. (Equal): Laticrete International 255 MultiMax polymer modified thin set/medium bed mortar

c. (Equal): MAPEI Ultralite polymer modified thin set/medium bed mortar

2.2.6 Grout:

2.2.6.1 Provide epoxy grout as manufactured by Custom Building Products. See

specification section 09 06 00 for additional information.

2.2.6.2 (Basis): Custom Building Products CEG-Lite Premium Epoxy Grout.

2.2.6.3 (Equal): Laticrete International Spectra lock Pro Premium Grout.

2.2.6.4 (Equal): MAPEI Kerapoxy Epoxy Grout.

2.2.6.5 Provide clear grout sealer at all grout joints; type and quantities recommended by tile manufacturer.

2.2.7 Warranty:

2.2.7.1 Provide sole source warranty. All tile installation materials shall be by single manufacturer for a coordinated system with a 15 year warranty. Custom Building Products, 13001 Seal Beach Blvd., Seal Beach, CA 90740. ASD. Telephone Toll Free: (800) 282-8786. Fax: (800) 200-7765. www.custombuildingproducts.com

a. Technical Contact: Mr. Chris Vombaur @ 909.213.0111 - chrisv@cbpmail.net

PART 3 - EXECUTION

3.1 SURFACE CONDITIONS:

3.1.1 Surface Preparation for Tile and Stone Work.

3.1.1.1 All supporting surfaces shall be structurally sound, solid, stable, level, plumb, and true to a tolerance in plane of 1/4 inch (6 mm) in 10 feet 0 inch (3 m) for walls, 1/4 inch (6 mm) in 10 feet (3 m) for floors when specified for thin-set method. They shall be clean and free of dust, oil, grease paint, tar, wax, curing compound, primer, sealer, form release agent, laitance, loosely bonded topping, loose particles or any deleterious substance and debris which may prevent or reduce adhesion.

3.1.1.2 Mechanically sand and scarify the substrate to completely remove all paint, loosely bonded topping, loose particles and construction debris.

3.1.1.3 Turn off all forced ventilation and radiant heating systems and protect work against drafts during installation and for a period of at least 72 hours after completion. Use indirect auxiliary heaters to maintain the temperatures in the area at the recommended workable level. Vent temporary heater to exterior to prevent damage to tile work from carbon dioxide build-up.

3.1.1.4 Before work commences examine the areas to be covered and report any flaw or adverse condition in writing to the Resident Engineer and the architect and to the general contractor. Do not proceed with work until surfaces and conditions comply with the requirements indicated in ANSI A108 specifications.

3.1.2 Concrete:

3.1.2.1 All concrete substrates shall be at least 28 days old, completely cured and free of hydrostatic conditions, and/or moisture problems.

3.1.2.2 New concrete surfaces for dry-set mortar, medium-bed mortar or thick-bed mortar installations shall be wood floated or broom finished. Concrete walls should be bush-hammered or sandblasted.

3.1.2.3 On grade or below grade concrete slabs must be installed over an effective vapor barrier and be exempt from hydrostatic pressures.

3.1.2.4 Over excessively dry porous concrete, keep the concrete substrate continuously moist for at least 24 hours before work begins when using dry-set mortars or medium-bed mortars. Remove all excess water or standing water allowing the surface to become almost dry before installing the leveling coat, dry-set mortar or medium-bed dry-set mortar.

3.1.2.5 For minor repairs and smoothing up to 1/2 inch (12 mm), use Custom Building Products Skim Coat & Patch Cement Underlayment or SpeedFinish Patching & Finishing Compound.

3.1.2.6 For leveling of large areas use Custom Building Products LevelLite Self-Leveling Underlayment for pours up to 2 inches (51 mm) thick, LevelQuik Rapid Setting Self-Leveling Underlayment for pours up to 1 inch (25 mm) thick or Extended Setting Self-Leveling Underlayment for pours up to 1 inch (25 mm) thick.

3.1.3 Membrane:

3.1.3.1 Pre-treat Penetrations: Pack any gaps around pipes, lights or other penetrations with a compressible backer rod and suitable waterproof sealant. Apply a liberal coat of liquid around penetration opening. Embed pieces of 6" (15 cm) wide fabric into liquid. Cover with a second layer of liquid. After curing, seal flashing with a waterproof sealant.

3.1.3.2 Expansion Joints: Cracks in excess of 1/8" (3 mm) should be treated as expansion joints. Carry these types of joints through any subsequent finishing material. Clean the joint and install open or closed cell backer rod to the proper depth as outlined in EJ 171 in the Tile Council Handbook. Next, compress a sealant as specified by the Resident Engineer and the architect into the joint, coating the sides and leaving it flush with the surface. After the sealant is dry, place bond breaker tape over joint. Apply a minimum 3/64" (1.2 mm) of liquid over the joint and substrate. Install the tile work onto the membrane but do not bridge the joint. After the tile work is set properly, fill the joint with any specified color sealant, following the Resident Engineer and the architect's and manufacturer's instructions.

3.1.3.3 Pre-treat Drains: Drains should have a clamping ring with open weep holes for thin-set application. Cut a square of reinforcing fabric approximately 38" x 38" (96 x 96 cm). In the center of the fabric cut a hole that matches the diameter of the drain throat. Apply a liberal coat of liquid to the bottom flange. Drain should be fully supported without movement and even with plane of substrate.

a. Center the circular cutout over the drain throat and embed the fabric into the liquid making sure it does not obstruct the drainage hole. Then apply an additional coat of liquid. Wet coat thickness should be 20 - 30 mils thick.

b. After curing, apply a waterproof sealant bead where the fabric cutout meets the drain throat. Clamp upper flange onto membrane and tighten. Caulk with a silicone caulk around flange where membrane and upper flange make contact. A toilet flange can be handled in much the same manner.

3.1.3.4 Membrane Application: Allow any pre-treated areas to dry to the touch. Apply a liberal coat (20 - 30 mils thick) of liquid with brush or roller over substrate including pre-treated areas. Lay reinforcing fabric into wet liquid and smooth out any wrinkles.

a. Press fabric with brush or roller until liquid bleeds through to surface. Lap seams approximately 2" (5 cm). Flash membrane up over pre-treated coves and corners so areas will have two layers of fabric. Apply another liberal coat of liquid over fabric to saturate it. Let top coat dry to the touch, approximately 1 - 3 hours. Make another liberal application (20 - 30 mils thick) of liquid over entire surface to seal membrane.

b. When last coat has dried to the touch, inspect final surface for pinholes, voids, thin spots or other defects and use additional liquid to seal defects. Reinforcing fabric and third coat of liquid can be omitted over interior, vertical cement backerboard or drywall surfaces, however, pre-treatment is still required.

3.1.4 Setting Materials:

3.1.4.1 Specified setting materials may be installed up to 3/4 of an inch thick on horizontal surfaces.

3.1.4.2 Apply mortar or adhesive with notched trowel using scraping motion to work material into good contact with the wall surface to be covered. Maintain 95 percent coverage on back of Tile and fully bed all corners.

3.1.4.3 When installing natural stone Tiles, trowel a sufficient quantity of mortar adhesive onto back of each Tile.

3.1.4.4 Maintain 95 percent coverage on back of the Tile and fully bed all corners.

3.1.4.5 Apply only as much mortar or adhesive as can be covered within allowable windows as recommended by mortar or adhesive manufacturer or while surface is still tacky.

3.1.4.6 Set Tiles in place and rub or beat with small beating block.

3.1.4.7 Lightly beat or rap Tile to ensure proper bond and also to level surface of Tile.

3.1.4.8 The setting materials must be free of voids to create a continuous, solid bond.

3.1.4.9 Align Tile to show uniform joints and allow for setting until firm.

3.1.4.10 Clean excess mortar or adhesive from surface of Tile with wet cheesecloth while mortar is fresh.

3.1.5 Epoxy Grout:

3.1.5.1 Tile must be firmly attached to a sound substrate with the mortar adequately cured per the mortar manufacturers recommended time, before grouting.

3.1.5.2 Grout joints should be free of all loose debris, contaminants and excess mortar.

3.1.5.3 Remove all grout from container and spread out in piles over the surface to be grouted as soon as mixing is completed.

3.1.5.4 Apply grout using a hard epoxy rubber float, filling all joints full and even with surface of tile.

3.1.5.5 It is important to achieve 100% fill coverage with no voids in the joints to prevent pin holes and slumping of the epoxy grout.

3.1.5.6 Remove excess epoxy by holding the grout float at a 90° angle and pulling the float diagonally across the grout joints using it like a squeegee.

3.1.5.7 Removing as much epoxy as possible will make final cleaning easier.

3.1.5.8 Do not allow epoxy to set on face of tile and apply liberal amounts of clean, warm water to the grouted area.

3.1.5.9 Using a grout sponge and or a micro fiber cloth with as little pressure as possible, work in a circular motion across tiles to loosen epoxy film and to finish the joints smoothly.

3.1.5.10 Change rinse water (and sponge or micro fiber cloth if build-up occurs) frequently to aid in clean-up and minimize epoxy residue left behind.

3.1.5.11 As a final step, clean film from tile by dragging a clean, microfiber towel flatly across the tiles.

3.1.6 Installation: Reference latest edition of the "TCNA Handbook for Ceramic, Glass and Stone Tile Installation" published by the Tile Council of North America, Inc.

3.1.6.1 Bathrooms, Floor and Walls:

F113	For dry bathroom floors on grade
F144	For dry bathroom floors on elevated framing
B415 & F121	For wet bathroom floors on grade (shower etc.)
B415 & F121	For wet bathroom floors on elevated framing (shower, etc.)
W243	For dry bathroom walls
B415 & W244C or F	For wet bathroom walls (shower etc.)

Slate, Cast Marble and Granite Floors:

F111	For Concrete sub floor
F113	If all similar gauged material

Slate, Stone Adhered Veneer Exterior Walls:

W201 Similar	For exterior/interior walls

3.1.6.2 Expansion Joints: Contractor shall coordinate location of expansion joints whether or not joints are indicated on drawings, verifying exact locations of joints with the Resident Engineer and the Architect at the Pre-Tiling Meeting described in Part 1 of this section. All expansion joints shall occur along vertical or horizontal grout joint as occurs. Follow detail EJ171 for installation of expansion joints for paving and where detailed on drawings, if not indicated on drawings maximum of 16'-0" between expansion joints - verify with the Resident Engineer and the Architect.

3.1.6.3 Lay out tiles on floors and lengthwise on walls so that no tile less than one-half size occurs. Align joints in wall tile vertically and horizontally. No staggered joints will be permitted.

3.1.6.4 Thoroughly soak all non-vitreous tile at least 1/2 hour in clear water and drain off excess, leaving no free water on back of tile. On walls cut mortar setting bed through to scratch coat at every 4th course. Firmly embed and beat tile into mortar with all finished surfaces brought to true and level planes.

3.1.6.5 Grout tile joints flush with face of tiles making a neatly finished smooth surface. Thoroughly wash out tile joints and saturate with clean water before grouting. Grout joints with grouting cement mixed water to a thick creamy consistency and thoroughly force into all joints to fill entire depth.

3.1.6.6 Shower: Floors shall be method F121, walls shall be method W221/B414 or W244/B415 referenced in the TCA handbook.

3.1.6.7 Wall Tile (Wainscot): Where wall tile is not full height, terminate top of wainscot with *Schluter* – SchieneE. Match Schiene height to tile depth.

3.1.6.8 Wall Tile (Wainscot) Inside/outside Corners: Miter inside corners. Miter outside corners and ease all sharp edges.

3.1.6.9 Exterior Walls: Installation shall be method W221 (exterior).

3.1.7 Cleaning:

3.1.7.1 Keep pavers clean as work progresses. If mortar or grout show on faces of units, scrub with a solution of acid or chemical cleaner as recommended by paver manufacturer on unglazed tile until stains are removed. Rinse clean with mild soap and fresh water only on glazed tile. Rinse all tile when completed with fresh clean water.

3.1.7.2 Clean tile surfaces as thoroughly as possible on completion of grouting. Remove all grout haze, observing tile manufacturer's recommendations as to use of acid and chemical cleaners. Rinse tile work thoroughly with clean water before and after using chemical cleansers. Polish surface of tile work with soft cloth.

3.1.7.3 Protection of Finished Work: Floor areas shall be entirely covered with a thin polyvinyl sheet immediately upon completion of grouting. Kraft paper shall be applied over the polyvinyl sheeting to protect it from possible damage by others. Lap the paper not less than 4 inches and seal the laps against the escape of the moisture in tile work with weights or planks. Leave in place for three full days. Keep tiled areas closed to traffic and other work until tile is firmly set. Protect from damage until acceptance.

3.1.8 Sealing:

3.1.8.1 All tile/grout to be sealed with ‘Aqua Mix Penetrating Sealer’ as manufactured by Aqua Mix Inc. (800) 366-6877, or specific materials as recommended by the flooring manufacturer.

3.1.9 Completion:

3.1.9.1 Remove work not complying with requirements of the Contract Documents or the referenced standards and promptly replace with work, which does comply.

3.1.9.2 Deliver to the Owner, 3% of the amount of each color or type of tile packaged securely to prevent damage and clearly labeled as to location used.

END OF SECTION 09 30 00

SECTION 09 51 00 - ACOUSTICAL CEILINGS

PART 1 - GENERAL

1.1 RELATED DOCUMENTS AND DESCRIPTION OF WORK:

The work includes the furnishing and installing of all acoustical ceiling and exterior soffit complete, including acoustical lay-in units and suspension systems, as indicated on drawings and as specified. The conditions of Contract and Division 1 apply to this section as fully as if repeated herein.

1.2 QUALITY ASSURANCE:

1.2.1 Acoustical lay-in unit shall comply with the following:

1.2.1.1 Surface Burning Characteristics: 25 or less for flame spread and 50 or less or smoke developed per ASTM E 84.

1.2.2 Acoustical ceiling assemblies shall comply with the applicable sections of seismic design requirements of the **"California Building Code, current edition (CBC)".**

1.2.3 Coordinate layout and installation of acoustical ceiling units and suspension system components with other work supported by or penetrating through, ceiling including light fixtures, HVAC equipment, fire-suppression system components, and partition system.

1.2.4 Exterior soffit assemblies shall be rigidly supported and comply with **Chapter 16, "California Building Code, current edition (CBC)".**

1.2.5 Coordinate layout and installation of the exterior soffit system components with other work supported by or penetrating through the soffit.

1.2.6 Manufacturer's Warranty: 15 years, no sag or rust in the name of the project owner.

1.3 SUBMITTALS:

1.3.1 Submittal procedures and quantities are specified in Section 01 33 00.

1.3.2 Product Data: Manufacturer's product specifications and installation instructions for each acoustical ceiling material required, and for each suspension system, exterior soffit panel, and carriers and accessories, including certified laboratory test reports and other data as required to show compliance with these specifications.

1.3.3 Samples:

1.3.3.1 Full size samples for each acoustical unit required, showing full range of exposed color and texture to be expected in completed work.

1.3.3.2 Set of 12" long samples of each runner, cross tee, and molding.

1.3.4 Shop Drawings:

1.3.4.1 Submit shop drawings showing reflected ceiling plans; location of acoustical ceilings and suspension system. Avoid using less than half width units at borders, location of light fixtures, linear diffusers, plenums and other exposed to view item; dimensions, jointing, method of hanger attachment, fastenings and any other pertinent information. Shop drawings shall show calculations indicating compliance with seismic resistance requirements. Calculations shall be prepared by a licensed structural engineer.

1.4 DELIVERY, STORAGE, AND HANDLING:

1.4.1 Deliver acoustical ceiling units to project site in original, unopened packages and store them in a fully enclosed space where they will be protected against damage from moisture, direct sunlight, surface contamination or other causes.

1.4.2 Before installing acoustical ceiling units, permit them to reach room temperature and a stabilized moisture content.

1.4.3 Handle acoustical ceiling units carefully to avoid chipping edges or damaging units in any way.

1.5 PROJECT CONDITIONS:

Space Enclosure: Do not install interior acoustical ceilings until space in enclosed and weatherproof, wet-work in space is completed and nominally dry, work above ceilings completed, and ambient conditions of temperature and humidity will be continuously maintained at values near those indicated for final occupancy.

PART 2 - PRODUCTS

2.1 MATERIALS

2.1.1 Acoustical Ceiling Units, General:

2.1.1.1 Standard for Acoustical Ceiling Units: Provide manufacturer's standard units of configuration indicated which are prepared for mounting method designated and which comply with FS SS-S-118 requirements, including those indicated by reference to types, form, pattern, grade (NRC or NIC's as applicable), light reflectance coefficient (LR), edge detail and joint detail (if any).

2.1.1.2 Colors, Textures, and Patterns: Provide products to match appearance characteristics indicated or, if not otherwise indicated, as selected by the Resident Engineer and the Architect from manufacturer's standard colors, surface textures, and patterns available for acoustical ceiling units and exposed metal suspension system members of quality designated.

2.1.2 Acoustical Panels:

2.1.2.3 Acoustical Unit Type A shall be Clean Room VL 2' x 2' in size and ¾" thick manufactured by Armstrong or Vinylshield A, CRF finish as manufactured by Capaul Corporation (a subsidiary of Celotex Corporation). Units shall conform to Federal Specifications SS-S-118B, Type III, Class A, carrying Underwriter's Laboratories, Inc. label and shall have an NRC Specification Range of 0.50 - 0.60 and CAC range of 35-39. Units shall have factory-applied paint finish. Color from manufacturers standard as selected by the Resident Engineer and the Architect.

2.1.3 Metal Suspension Systems, General:

2.1.3.2 Standard for Metal Suspension Systems: Provide Heavy Duty 15/16" hot dipped galvanized metal suspension systems of type, structural classification and finish which comply with applicable ESR1308 and ASTM C 635 requirements for Second Look **(Unit Type A)**.

2.1.3.6 Finishes and Colors: Provide manufacturer's **standard** finish for type of system indicated, unless otherwise required. For exposed suspension members and accessories with painted finish, provide color indicated or, if not otherwise indicated, as selected by the Resident Engineer and the architect from manufacturer's full range of **standard** colors.

2.1.3.7 Attachment Devices: Size for 5 times design load indicated in ASTM C 635, Table 1, Direct Hung.

2.1.3.8 Hanger Wire: Galvanized carbon steel wire, ASTM A 641, soft temper, pre-stretched, Class 1 coating, sized so that stress at 3-times hanger design load (ASTM C 635, Table 1, Direct Hung), will be less than yield stress of wire, but provide not less than 12 gage.

2.1.3.9 Edge Moldings and Trim: Metal of types and profiles indicated or, if not indicated, provided manufacturer's standard molding and color for edges and penetrations of ceiling which fits with type of edge detail and suspension system indicated.

PART 3 - EXECUTION

3.1 INSTALLATION:

3.1.1 Inspection: Examine all surfaces and conditions affecting proper installation of the materials and report defects of material or surfaces to which materials abut. Commencement of work will signify acceptance of above indicated materials and surfaces as satisfactory.

3.1.2 Coordination: Furnish layouts for inserts, clips, or other supports required to be installed by other trades for support and penetration of acoustical ceilings. Light can fixtures, sprinkler heads, other similar equipment shall be placed in center of tile or center of tile pattern as directed by the Resident Engineer and the Architect.

3.1.3 Verify field dimension and condition complies with shop drawings and adjust grid layout where necessary.

3.1.4 Installation of Acoustical Ceiling System:

3.1.4.1 General: Install materials in accordance with shop drawings and manufacturer's printed instructions, and to comply with governing regulations, fire resistance rating requirements as indicated, and industry standards applicable to work.

3.1.4.2 Install suspension systems to comply with ASTM C 636, with hangers supported only from building structural members. Locate hangers not less than 8" from each end and spaced 4'-0" along each carrying channel or direct-hung runner, unless otherwise indicated, leveling to tolerance of 1/8" in 12'-0". Cross tees shall be installed perpendicular to main tees at 24" o.c. to form a 2'-0" x 2'-0" exposed grid system where indicated on the drawings. Joints shall be true and straight and junctures with ceilings, walls and openings shall be neat and tight. Completed work shall present a smooth plane and level surface, free from uneveness, edge or corner offsets, cupping, scratches and other imperfections. Install corrugation patterns in one direction as directed by the Resident Engineer and the Architect.

3.1.4.3 Secure wire hangers by looping and wire-tying, either directly to structures or to inserts, eye-screws, or other devices capable of supporting a minimum of 75 lbs. and are secure and appropriate for substrate, and which will not deteriorate or fail with age or elevated temperatures. Wires supporting fixtures shall be capable of supporting four (4) times the fixture weight.

3.1.4.4 Install hangers plumb and free from contact with insulation or other objects within ceiling plenum, which are not part of supporting structural or ceiling suspension system. Wires shall not attach to or bend around interfering material such as ductwork. Trapeze or equivalent devices shall be used where obstructions interfere with direct suspension. Trapeze suspension shall be a minimum construction of back-to-back 1-1/2" cold formed channels for spans up to 6'-0".

3.1.4.5 All recessed or drop in light fixtures and other similar equipment shall be supported directly from the fixture housing to the structure above. Leveling and positioning of fixture shall be provided by the fixture supports. Installation of grid and light fixtures shall meet the requirements of the California Earthquake Standards. Fixtures shall typically be located in the center of tile as shown on the drawings.

3.1.4.6 Provide lateral bracing system. Splayed wires shall be installed to main runners at a 45 degree angle starting a maximum of 6'-0" from walls. Splayed wires shall be spaced at 12' - 0" on center in each direction. Four splayed wires shall be installed at each point required. The four splayed wires shall be installed at 90 degrees to each other. Install a telescoping strut at 12' - 0" on center in each direction (6' -0" from wall maximum.)

3.1.4.7 Install edge moldings of type indicated at perimeter of acoustical ceiling area and at locations where necessary to conceal edges of acoustical units. All corners of wall molding shall be mitered.

3.1.4.8 Screw-attach moldings to substrate at intervals not over 16" o.c. and not more than 3" from ends, leveling with ceiling suspension system to tolerance of 1/8" in 12'-0". Miter corners accurately and connect securely.

3.1.4.9 Install acoustical panels in coordination with suspension system, with edges concealed by support of suspension members. Scribe and cut panels to fit accurately at borders and at penetrations. Perform all cutting required for fixtures, pipes and other work passing through acoustical panels. Neatly and tightly fit units to such work and adjoining work. Border units shall fit neatly and tightly against abutting surfaces. Replace loose and damaged panels when directed. Touch-up all damaged finish. Leave all surface clean and free from marking and other disfigurement.

3.1.4.10 Clean exposed surfaces of acoustical ceilings, including trim, edge moldings, and suspension members; comply with manufacturer's instructions for cleaning and touch-up of minor finish damage. Remove and replace work, which cannot be successfully cleaned and repaired to permanently eliminate evidence of damage.

3.3 EXTRA STOCK:

Deliver stock of maintenance material (3% of the amount of each type and/or color of material used in work) to Owner. Furnish maintenance material matching products installed, packaged with protective covering for storage and identified with appropriate labels.

END OF SECTION 09 51 00

SECTION 09 51 50 - ACOUSTICAL PANELS CEILING

PART 1 GENERAL

1.1 SUMMARY

A. Section Includes: Cementitious wood fiber plank acoustical ceiling system

1.2 REFERENCES

A. ASTM International:

1. ASTM C635 Standard Specification for the Manufacture, Performance, and Testing of Metal Suspension Systems for Acoustical Tile and Lay-in Panel Ceilings.

2. ASTM E84 Standard Test Method for Surface Burning Characteristics of Building Materials.

3. ASTM E1264 Standard Classification for Acoustical Ceiling Products.

B. Ceilings and Interior Systems Construction Association (CISCA):

1. CISCA Code of Practices.

1.3 SYSTEM DESCRIPTION

A. Performance Requirements:

1. Provide acoustical ceiling assembly designed and tested to provide surface burning characteristics (ASTM E84) as follows:

a. Flamespread: 0.

b. Smoke Developed: 0.

2. Provide acoustical ceiling system which has been manufactured, fabricated and installed to provide Noise Reduction Coefficient (NRC) rating as follows:

a. 0.80 NRC rating.

1.4 SUBMITTALS

A. General: Submit listed submittals in accordance with Conditions of the Contract and Division 1 Submittal Procedures Section.

B. Product Data: Submit manufacturer’s product data and installation instructions.

C. Samples: Submit selection and verification samples: 6 inch × 24 inch (152 × 152 mm) sample for each wood fiber ceiling unit required, showing full range of exposed

texture to be expected in completed work.

D. Quality Assurance/Control Submittals: Submit the following:

1. Certificates: Submit manufacturer's certificate that products meet or exceed specified requirements.

1.5 QUALITY ASSURANCE

A. Installer Qualifications: Utilize an installer having demonstrated experience on projects of similar size and complexity.

B. Regulatory Requirements and Approvals: [Comply with requirements below.] [Specify applicable requirements of regulatory agencies.].

1. International Conference of Building Officials (ICBO):

a. ICBO Research Report No. 1116.

2. State of California:

a. DSA Number PA-008.

C. Pre-installation Meetings: Prior to commencing the work of this section, the contractor shall schedule and attend a meeting at the job site to discuss conformance with requirements of the Contract Documents. Request attendance of representatives from the Resident Engineer and the Architect, Contractor, subcontractors (applicable if lath and plastering contractor and/or sealant and expansion joint contractor are contracted separately from the tile contract), and other parties who are involved.

1.6 DELIVERY, STORAGE & HANDLING

A. General: Comply with Division 1 Product Requirement Section.

B. Delivery: Deliver materials in manufacturer's original, unopened, undamaged containers with identification labels intact.

1. Provide labels indicating brand name, style, size and thickness.

C. Storage and Protection: Store materials protected from exposure to harmful environmental conditions and at temperature and humidity conditions recommended by the manufacturer.

1. Prevent soiling, physical damage or wetting.

2. Store cartons open at each end to stabilize moisture content and temperature.

1.7 PROJECT/SITE CONDITIONS

A. Environmental Requirements:

1. Do not install ceiling panels until building is closed in and HVAC system is operational.

2. Locate materials onsite at least 24 hours before beginning installation to allow materials to reach temperature and moisture content equilibrium.

3. Maintain the following conditions in areas where acoustical materials are to be installed 24 hours before, during and after installation:

   a. Relative Humidity: 65 - 75%.

   b. Uniform Temperature: 55 - 70 degrees F (13 - 21 degrees C).

1.8 MAINTENANCE

A. Extra Materials: Provide [A recommended percentage of] [Specify percentage.] additional material for use by owner in building maintenance and repair.

B. Provide new unopened cartons of extra materials, packaged with protective covering for storage and identified with appropriate labels.

PART 2 PRODUCTS

2.1 ACOUSTICAL CEILING SYSTEM

A. Manufacturer: Tectum Inc. or equal.

Contact: 105 South Sixth Street, Newark, OH 43055; Telephone: (888) 977-9691, (740) 345-9691; Fax: (800) 832-8869; E-mail: info@tectum.com; website: www.tectum.com.

1. Standard Tectum panels, long edges textured.

   a. Material: Aspen wood fibers bonded with inorganic hydraulic cement.

   b. Thickness : 1.5 inch thick, NRC .55.

   c. Color: Natural (to be field painted per finish schedule).

   d. Width: 23 3/4”.

   e. Length: 96".

   f. Mounting: Type A - Tectum direct mounting to wood framing, open to thermal insulation above

2.2 PRODUCT SUBSTITUTIONS

A. Substitutions: substitutions permitted per 01 25 00.

2.3 ACCESSORIES

A. Provide accessories as follows:

1. Tectum Painted Head Drywall Screws:

a. Material: Steel.

b. Length: 2 inches or as required by manufacturer for thickness installed.

c. Color: Natural

PART 3 EXECUTION

3.1 MANUFACTURER'S INSTRUCTIONS

A. Comply with the instructions and recommendations of the ceiling system manufacturer.

B. Install materials in accordance with governing regulations, fire resistance rating requirements and industry standards applicable to work.

1. Comply with CISCA Code of Practices.

3.2 EXAMINATION

A. Site Verification of Conditions:

1. Examine surfaces scheduled to receive suspended or directly attached acoustical units for unevenness, irregularities and dampness that would affect quality and execution of work.

2. Do not proceed with installation of ceiling system until unacceptable conditions are corrected.

3.3 INSTALLATION

A. General: Do not begin installation until materials sufficient to complete an entire room are received and prepared for installation.

B. Follow plans for panel layout. Measure each ceiling area to establish final layout of acoustical units to balance border widths at opposite edges of each ceiling. Avoid use of less-than-half width units at borders.

C. Symmetrically locate grid layout in each space. Coordinate work with other trades so that lighting fixtures, grilles and other ceiling fixtures work with grid layout.

D. Do not use universal splices or other splices that would obstruct passage of recessed lighting fixtures through grid openings or limit fixture relocation upon flanges of ceiling grids.

E. Support ceiling panels from structure above, not from ductwork, metal deck, equipment or piping.

F. Provide support not more than 6 inches (152 mm) from ends and not more than 2 feet on center.

G. Field paint cut edges to match surface color and sheen.

H. Arrange acoustical units and orient directionally patterned units, if any, in manner shown on reflected ceiling plans.

3.4 CLEANING

A. Clean exposed surfaces of acoustical ceilings, trim, edge moldings and suspension members to comply with manufacturer's instructions for cleaning.

B. Touch up any minor finish damage.

C. Remove and replace work that cannot be successfully cleaned and repaired to permanently eliminate evidence of damage.

3.5 PROTECTION

A. Protect installed work from damage due to subsequent construction activity, including temperature and humidity limitations and dust control, so that the work will be without damage and deterioration at the time of acceptance by the Owner.

END OF SECTION 09 51 50

SECTION 09 91 00 - PAINTING

PART 1 - GENERAL

1.1 RELATED DOCUMENTS:

Drawings and General Provisions of Contract, including General and Supplementary Conditions and Division 1 Specification sections, apply to work of this section.

1.2 DESCRIPTION OF WORK:

1.2.1 Extent of painting work is indicated on schedules, and as herein specified.

1.2.2 Work includes painting and finishing of interior and exterior exposed items and surfaces throughout project, except as otherwise indicated.

1.2.2.1 Surface preparation, priming and coats of paint specified are in addition to shop-priming and surface treatment specified under other sections of work.

1.2.3 Work includes field painting of exposed bare and covered pipes and ducts (including color coding), and of hangers, exposed steel and iron work, and primed metal surfaces of equipment installed under mechanical, electrical work, sealants and caulking, except as otherwise indicated.

1.2.3.1 Upon final completion Contractor shall provide the Owner with properly labeled new sealable containers of mixed paint which were utilized on the project in the following quantities.

Two (2) - five (5) gallon containers of each color mix which was applied to a surface area totaling greater than 15,000 s.f.

One (1) - one (1) gallon container of each color mix which was applied to a surface area totaling less than 15,000 s.f.

1.2.4 "Paint" as used herein means all coating systems materials, including primers, emulsions, enamels, stains, sealers and fillers, and other applied materials whether used as prime, intermediate or finish coats.

1.2.5 Surfaces to be painted: Except where natural finish of material is specifically noted as a surface not to be painted or where natural finish of material matches adjacent material color, **paint exposed surfaces whether or not colors are designated in "schedules". Where items or surfaces are not specifically mentioned, paint the same as similar adjacent materials or areas.** Note: Contractor shall paint all sprinkler piping, supply and return mechanical grille registers and/or ductwork, speaker grilles, louvers, etc. to match adjacent wall surfaces even if grilles are pre-finished. Contractor shall paint all electrical light fixture trim in contact with adjacent wall or ceiling surface even if fixture trims are pre-finished. **Exact color of paint to be selected by the Resident Engineer and the Architect in field at time of field samples**. If color or finish is not designated, the Resident Engineer and the Architect will select these from standard colors or finishes available.

1.2.6 Following categories of work are not included as part of field-applied finish work.

1.2.6.1 Pre-Finished Items: Unless otherwise indicated, do not include painting when factory-finishing or installer-finishing is specified for such items as (but not limited to) pre-finished partition systems, acoustic materials, ceramic tile, pre-formed roof and wall panels, elevator entrance doors and frames, elevator equipment, and mechanical and electrical equipment, including switchgear and distribution cabinets.

1.2.6.2 Concealed Surfaces: Unless otherwise indicated, painting is not required on surfaces such as walls or ceilings in concealed areas and generally inaccessible areas, foundation spaces, furred areas, pipe spaces, duct shafts and elevator shafts.

1.2.6.3 Finished Metal Surfaces: Unless otherwise indicated, metal surfaces of anodized aluminum, stainless steel, chromium plate, copper, bronze and similar finished materials will not require finish painting. (Galvanized metal is not a finished metal surface).

1.2.6.4 Operating Parts: Unless otherwise indicated, moving parts of operating units, mechanical and electrical parts, such as valve and damper operators, linkages, sinkages, sensing devices, motor and fan shafts will not require finish painting.

1.2.7 Following categories of work are included under other sections of these specifications.

1.2.7.1 Shop Priming: Unless otherwise specified, shop priming of ferrous metal items is included under various sections for structural steel, metal fabrications, hollow metal work and similar items. **Contractor to coordinate for exposure – that finish coat is compatible with shop prime. Provide certificate of primer specification and paint compatibility.** Shop primers are used specifically to avoid flash rusting on the jobsite while waiting to be painted. Where exposure has compromised the shop prime, a "high performance epoxy-based primer" or "inorganic zinc-rich primer" should be used.

1.2.7.1.1 Unless otherwise specified, shop priming of fabricated components such as architectural woodwork, and shop-fabricated or factory-built mechanical and electrical equipment or accessories is included under other sections of these specifications. **Contractor to coordinate for exposure – that finish coat is compatible with shop prime.** Shop primers are used specifically to avoid flash rusting on the jobsite while waiting to be painted. Where exposure has compromised the shop prime, a "high performance epoxy-based primer" or "inorganic zinc-rich primer" should be used.

1.2.7.2 Painting to separate dissimilar metals are specified under other sections.

1.2.8 Do not paint over any code-required labels, such as Underwriters' Laboratories and Factory Mutual, or any equipment identification, performance rating, name, or nomenclature plates.

1.3 QUALITY ASSURANCE:

1.3.1 Single Source Responsibility: Provide primers and other undercoat paint produced by same manufacturer as finish coats. Use only thinners approved by paint manufacturer, and use only within recommended limits.

1.3.2 Coordination of Work: Review other sections of these specifications in which prime paints are to be provided to ensure compatibility of total coatings system for various substrates. Upon request from other trades, furnish information or characteristics of finish materials provided for use, to ensure compatible prime coats are used.

1.4 SUBMITTALS:

1.4.1 Product Data: Submit manufacturer's technical information including paint label analysis and application instructions for each material proposed for use.

1.4.2 Samples: Prior to beginning work, the Resident Engineer and the Architect will furnish color chips for surfaces to be painted. Use representative colors when preparing samples for review.

Submit samples for the Resident Engineer and the Architect's review of color and texture only. Provide a listing of material and application for each coat of each finish sample.

1.4.2.1 On 12" x 12" hardboard provide three samples of each color and material, with texture to simulate actual conditions. Resubmit samples as requested by the Resident Engineer and the architect until acceptable sheen, color, and texture is achieved.

1.4.2.2 On actual wood surfaces, provide two 4" x 8" samples of natural, painted, and stained wood finish. Label and identify each as to location and application. **Allow for maximum 3 different brushouts of each color.**

1.4.2.3 On actual wall surfaces and other exterior and interior building components, duplicate painted finishes of prepared samples. Provide full-coat finish samples on at least 100 sq. ft. of surface, as directed, until required sheen, color, cover and texture is obtained. **Allow for maximum 3 different brushouts of each color.** Simulate finished lighting conditions for review of in-place work.

1.4.2.3.1 Final acceptance of colors will be from samples applied on the job.

1.5 DELIVERY AND STORAGE:

1.5.1 Deliver materials to job site in original, new and unopened packages and containers bearing manufacturer's name and label, and following information:

Name or title of material.
Manufacturer's stock number and date of manufacturer.
Manufacturer's name.
Contents by volume, for major pigment and vehicle constituents.
Thinning instructions.
Application instructions.
Color name and number.

1.5.2 Store materials not in actual use in tightly covered containers. Maintain containers used in storage of paint in a clean condition, free of foreign materials and residue.

1.5.2.1 Protect from freezing and excessive heat where necessary. Keep storage area neat and orderly. Remove oily rags and waste daily. Take all precautions to ensure that workmen and work areas are adequately protected from fire hazards and health hazards resulting from handling, mixing and application of paints.

1.5.3 Job Conditions:

1.5.3.1 Apply water-base paints only when temperature of surfaces to be painted and surrounding air temperatures are between 50 degrees F. (10 degrees C.) and 90 degrees F. (32 degrees C.), unless otherwise permitted by paint manufacturer's printed instructions.

1.5.3.2 Apply solvent-thinned paints only when temperature of surfaces to be painted and surrounding air temperatures are between 45 degrees F. (7 degrees C.) and 95 degrees F. (35 degrees C.), unless otherwise permitted by paint manufacturer's printed instructions.

1.5.3.3 Do not apply paint in high winds, rain, fog, or mist, or when relative humidity exceeds 85%, or to damp or wet surfaces, unless otherwise permitted by paint manufacturer's printed instructions.

1.5.3.3.1 Painting may be continued during inclement weather if areas and surfaces to be painted are enclosed and heated within temperature limits specified by paint manufacturer during application and drying periods.

1.6 WARRANTY:

1.6.1 Guarantee painting and finishing against peeling, fading, cracking, blistering, or crazing for a period of 2 years from the date of "Notice of Completion". The written warranty shall include materials and labor. The warranty shall be signed by the paint manufacturer, the painter and the Contractor.

PART 2 - PRODUCTS

2.1 ACCEPTABLE MANUFACTURERS:

2.1.1 Manufacturer: Products of Sherwin Williams (SW) are specified to establish level of quality. Subject to compliance with requirements, provide products of one of the following:

Dunn-Edwards Corporation (Dunn-Edwards)
Frazee Paint and Wall Coverings (Frazee)
Sherwin Williams (SW)

2.2 MATERIALS:

2.2.1 Material Quality: Provide best quality grade of various types of coatings as regularly manufactured by acceptable paint materials manufacturers. Materials not displaying manufacturer's identification as a standard, best-grade product will not be acceptable.

2.2.2 VOC Content: Products shall comply with VOC limits of the South Coast Air Quality Management District (SCAQMD), or authorities having jurisdiction.

2.2.3 Proprietary names used to designate colors or materials are not intended to imply that products of named manufacturers are required to the exclusion of equivalent products of other manufacturers.

2.2.3.1 Color Pigments: Pure, non-fading, applicable types to suit substrates and service indicated.

PART 3 - EXECUTION

3.1 INSPECTION:

3.1.1 Applicator must examine areas and conditions under which painting work is to be applied and notify Contractor in writing of conditions detrimental to proper and timely completion of work. Do not proceed with work until unsatisfactory conditions have been corrected in a manner acceptable to Applicator to produce the results called for herein.

3.1.2 Starting of painting work will be construed as Applicator's acceptance of surfaces and conditions within any particular area.

3.1.3 Do not paint over dirt, rust, scale, welding slag and burrs, grease, moisture, scuffed surfaces, or conditions otherwise detrimental to formation and adhesive bond of a durable paint film.

3.2 SURFACE PREPARATION:

3.2.1 General: Perform preparation and cleaning procedures in accordance with paint manufacturer's instructions and as herein specified, for each particular substrate condition.

3.2.1.1 Provide barrier coats over incompatible primers or remove and reprime as required. Notify the Resident Engineer and the Architect in writing of any anticipated problems in using the specified coating systems with substrates primed by others.

3.2.1.2 Remove hardware, hardware accessories, machined surfaces, plates, lighting fixtures, and similar items in place and not to be finish-painted or provide surface-applied protection prior to surface preparation and painting operations. Remove, if necessary, for complete painting of items and adjacent surfaces. Following completion of painting of each space or area, reinstall removed items.

3.2.1.3 Clean surfaces to be painted before applying paint or surface treatments. Fill cracks, holes and imperfections. Remove oil and grease prior to mechanical cleaning. Remove mill scale and welding slag, grind welding joints and burrs smooth. Program cleaning and painting so that contaminants from cleaning process will not fall onto wet, newly-painted surfaces.

3.2.1.4 Remove mildew from exterior impervious surfaces by scrubbing with a solution of trisodium phosphate and bleach. Power wash with a minimum of 3500psi clean water and allow substrate to dry.

3.2.2 Cementitious Materials: Prepare cementitious surfaces of concrete, concrete block, cement plaster and cement-asbestos board to be painted by removing efflorescence, chalk, dust, dirt, grease, oils and by roughening as required to remove glaze.

3.2.2.1 Determine alkalinity and moisture content of surfaces to be painted by performing appropriate tests. If surfaces are found to be sufficiently alkaline to cause blistering and burning of finish paint, correct this condition before application of paint. Do not paint over surfaces where moisture content exceeds that permitted in manufacturer's printed directions.

3.2.2.2 Clean concrete floor surfaces scheduled to be painted with a commercial etching cleaner. Flush floor with clean water to neutralize acid, and allow to dry before painting.

3.2.3 Wood: Clean wood surfaces to be painted of dirt, oil or other foreign substances with scrapers, mineral spirits, and sandpaper, as required. Sandpaper smooth those finished surfaces exposed to view, and dust off. Scrape and clean small, dry, seasoned knots and apply a thin coat of white shellac or other recommended knot sealer, before application of priming coat. After priming, fill holes and imperfections in finish surfaces with putty or plastic wood-filler. Sandpaper smooth when dried.

3.2.3.1 Prime, stain, or seal wood required to be job-painted immediately upon delivery to job. Prime edges, ends, faces, undersides, and backsides of such wood, including cabinets, counters, cases, paneling.

3.2.3.2 When transparent finish is required, use spar varnish for backpriming.

3.2.3.3 Seal tops, bottoms and cut-outs of unprimed wood doors with a heavy coat of varnish or equivalent sealer immediately upon delivery to job or immediately after machining by Contractor on site.

3.2.4 Ferrous Metals: Clean ferrous surfaces, which are not galvanized or shop-coated, of oil, grease, dirt, loose mill scale and other foreign substances by solvent or mechanical cleaning.

3.2.4.1 Repaint shop-applied prime coats as required by other sections of these specifications. Clean and paint with same type or compatible primer.

3.2.5 Galvanized Surfaces: Clean free of oil and surface contaminants with non-petroleum based solvent, per SSPC-SP1. Apply a test coat of primer and allow the coating to dry for one week. In the presence of the Resident Engineer and the Architect, perform an adhesion test per ASTM D-3359 before proceeding with painting. If coating does not adhere per test method, hand tool clean all galvanized or non-ferrous metal per SSPC-SP2. Apply a test coat of primer and test for adhesion per ASTM D-3359 in the presence of the Resident Engineer and the Architect.

3.3 MATERIALS PREPARATION:

3.3.1 Mix and prepare painting materials in accordance with manufacturer's directions.

3.3.2 Maintain containers used in mixing and application of paint in a clean condition, free of foreign materials and residue.

3.3.3 Stir materials before application to produce a mixture of uniform density, and stir as required during application. Do not stir surface film into material. Remove film and, if necessary, strain material before using.

3.4 APPLICATION:

3.4.1 General: Apply paint in accordance with manufacturer's directions. Use applicators and techniques best suited for substrate and type of material being applied.

3.4.1.1 Paint colors, surface treatments, and finishes are indicated in Section 09 06 00: Interior + Exterior Color and Material Schedule. For the purposes of bidding, the Contractor shall assume that a minimum of 4 trips will be required for brush-outs as required per 1.4.2.2 and 1.4.2.3

3.4.1.2 Provide finish coats which are compatible with prime paints used. Where a deep color finish color is chosen, primer must be tinted to the appropriate monochromatic gray tone for a two coat coverage. Provide the monochromatic primer only on the walls to receive the deep chromatic color.

3.4.1.3 Apply additional coats when undercoats, stains or other conditions show through final coat of paint, until paint film is of uniform finish, color and appearance. Give special attention to insure that surfaces, including edges,

corners, crevices, welds, and exposed fasteners receive a dry film thickness equivalent to that of flat surfaces.

3.4.1.4 Paint surfaces behind movable equipment and furniture same as similar exposed surfaces. Paint surfaces behind permanently-fixed equipment or furniture
with prime coat only before final installation of equipment.

3.4.1.5 Paint interior surfaces of ducts, where visible through registers or grilles, with a flat, non-specular black paint.

3.4.1.6 Paint back sides of access panels, and removable or hinged covers to match exposed surfaces.

3.4.1.7 Finish exterior doors on tops, bottoms and side edges same as exterior faces, unless otherwise indicated.

3.4.1.8 Sand lightly between each succeeding enamel or varnish coat.

3.4.1.9 Repaint first coat (primer) on metal surfaces which have been shop-primed and touch-up painted, unless otherwise indicated.

3.4.2 Scheduling Painting: Apply first-coat material to surfaces that have been cleaned, pretreated or otherwise prepared for painting as soon as practicable after preparation and before subsequent surface deterioration.

3.4.2.1 As recommended by coating manufacturer, allow sufficient time between successive coatings to permit proper drying. Do not recoat until paint has dried to where it feels firm, does not deform or feel sticky under moderate thumb pressure, and application of another coat of paint does not cause lifting or loss of adhesion of the undercoat.

3.4.3 Minimum Coating Thickness: Apply materials at not less than manufacturer's recommended spreading rate, to establish a total dry film thickness as indicated or, if not indicated, as recommended by coating manufacturer.

3.4.4 Mechanical and Electrical Work: Painting of mechanical and electrical work is limited to those items exposed in mechanical equipment rooms and in occupied spaces.

3.4.5 Mechanical items to be painted include, but are not limited to, the following: **Grilles, registers, louvers, trim** (to match adjacent surface), Sprinkler Piping, Piping, pipe hangers and supports, Heat exchangers, Tanks, Ductwork, insulation, Motor, mechanical equipment and supports, Accessory items.

3.4.6 Electrical items to be painted include, but are not limited to, the following: **Light fixtures** - see fixture schedule for types (including trim rings, pendants, and plates/boxes), Conduit and fittings, Switchgear.

3.4.7 Prime Coats: Apply prime coat of material which is required to be painted or

finished, and which has not been prime coated by others. See 1.2.7.1 for additional information.

3.4.7.1 Recoat primed and sealed surfaces where there is evidence of suction spots or unsealed areas in first coat, to assure a finish coat with no burn-through or other defects due to insufficient sealing.

3.4.8 Pigmented (Opaque) Finishes: Completely cover to produce an opaque, smooth surface of uniform finish, color, appearance and coverage. Cloudiness, spotting, holidays, laps, brush marks, runs, sags, ropiness, or other surface imperfections will not be acceptable.

3.4.9 Transparent (Clear) Finishes: Use multiple coats to produce glass-smooth surface film of even luster. Provide a finish free of laps, cloudiness, color irregularity, runs, brush marks, orange peel, nail holes, or other surface imperfections. Provide satin finish for final coats, unless otherwise indicated.

3.4.10 Completed Work: Match approved samples for color, texture and coverage. Remove, refinish or repaint work not in compliance with specified requirements at a time suitable to the project schedule and at Contractor's expense and at no cost to the Owner. The requirements of this specification are to produce work of excellent quality in complete conformance with the best practice of the trade and these specifications.

3.5 FIELD QUALITY CONTROL:

3.5.1 The right is reserved by Owner to invoke the following material testing procedure at any time, and any number of times during period of field painting:

3.5.1.1 Engage services of an independent testing laboratory to sample paint being used. Samples of materials delivered to project site will be taken, identified and sealed, and certified in presence of Contractor.

3.5.1.2 Testing laboratory will perform appropriate tests for any or all of following characteristics: Abrasion resistance, apparent reflectivity, flexibility, washability, absorption, accelerated weathering, dry opacity, accelerated yellowness, recoating, skinning, color retention, alkali resistance and quantitative materials analysis.

3.5.2 If test results show that material being used does not comply with specified requirements, Contractor may be directed to stop painting work, and remove non-complying paint; pay for testing; repaint surfaces coated with rejected paint; remove rejected paint from previously painted surfaces if, upon repainting with specified paint, the two coatings are non-compatible.

3.6 CLEAN UP AND PROTECTION:

3.6.1 Clean-Up: During progress of work, remove from site discarded paint materials, rubbish, cans and rags at end of each work day.

3.6.2 Protection: Protect work of other trades, whether to be painted or not, against damage by painting and finishing work. Immediately remove paint that falls on finished surfaces not scheduled to be painted, using materials and techniques that will not damage the affected surface. Correct any damage by cleaning, repairing or replacing, and repainting as acceptable to the Resident Engineer and the Architect.

3.6.2.1 Provide "Wet Paint" signs as required to protect newly-painted finishes. Remove temporary protective wrappings provided by others for protection of their work, after completion of painting operations.

3.6.2.2 At completion of work of other trades, touch-up and restore all damaged or defaced painted surfaces.

3.7 EXTERIOR PAINT SCHEDULE:

3.7.1 General: Provide the following paint systems for the various substrates, as indicated.

3.7.1.1 Galvanized/Aluminum Metal: **Provide pretreatment of surface as required per Section 3.2.**

3.7.1.1.1 High Performance Gloss Finish: This section covers metals which **are** subjected to frequent use/abuse, including all: Trellises, Exposed Structural Metal, Bollards, Handrails, Guardrails, Metal Screens or Grids, Fencing, Gates, Trash enclosure gates and hardware, etc.

Epoxy Prime Coat:
Sherwin Williams: Macropoxy 646 B58 Series

Second Coat:
Sherwin Williams: Acrolon 100 Polyurethane Gloss B65 Series

Third Coat:
Sherwin Williams: Acrolon Polyurethane Gloss B65 Series

3.7.1.1.2 Acrylic Gloss Finish: This section covers metals which **are not** subjected to frequent use/abuse, including all: Parapet caps, Flashings, Covers, Reglet reveals, Gutters/Downspouts (when not pre-finished) and miscellaneous metal.

Pre-Treatment:
Sherwin Williams: GLL Clean n Etch
Prime Coat:
Sherwin Williams: ProCryl Universal Primer B66-310

Second Coat:
Sherwin Williams: ProIndustrial Acrylic Gloss B66-600 Series

Third Coat:
Sherwin Williams: ProIndustrial Acrylic Gloss B66-600 Series

3.7.1.2 **Ferrous Metal: Provide pretreatment of surface as required per Section 3.2.** For shop primed material, provide certificate of primer specification and what compatibility for the following coats

3.7.1.2.1 High Performance Gloss Finish: This section covers metals which **are** subjected to frequent use/abuse, including all: Trellises, Exposed Structural Metal, Bollards, Handrails, Guardrails, Metal Screens or Grids, Fencing, Gates, Trash enclosure gates and hardware, etc.

Epoxy Prime Coat:
Sherwin Williams: Macropoxy 646 B58 Series

Second Coat:
Sherwin Williams: Acrolon 100 Polyurethane Gloss B65 Series

Third Coat:
Sherwin Williams: Acrolon 100 Polyurethane Gloss B65 Series

3.7.1.2.2 Acrylic Gloss Finish: This section covers metals which **are not** subjected to frequent use/abuse, including all: Parapet caps, Flashings, Covers, Reglet reveals, Gutters/Downspouts (when not pre-finished) and miscellaneous metal.

Pre-Treatment:
Sherwin Williams: GLL Clean n Etch

Prime Coat:
Sherwin Williams: ProCryl Universal Primer B66-310

Second Coat:
Sherwin Williams: ProIndustrial Acrylic Gloss B66-600 Series

Third Coat:
Sherwin Williams: ProIndustrial Acrylic Gloss B66-600 Series

3.7.1.3 **Painted Woodwork:**

3.7.1.3 1 Gloss Finish: 3 coats.

Prime Coat:
Sherwin Williams: PrepRite ProBlock Primer B51W8020

Second and Third Coat:
Sherwin Williams: ProIndustrial Acrylic Gloss B66-600 Series

3.7.1.4 **CMU:**

3.7.1.4.1 Flat Finish: 3 Coats

Block Filler:
Sherwin Williams: PrepRite Block Filler B25W25

Second and Third Coat:
Sherwin Williams: A100 100% Acrylic Flat A6 Series

3.7.14.2 Clear Sealer:

For Clear Sealer specification see Section 07 19 00, Part 2.01

3.7.1.5 **Cement Plaster/Concrete:**

3.7.1.5.1 Flat Finish

Primer
Sherwin Williams: Epoxy Tilt Up Primer B42WW49

Second and Third Coat
Sherwin Williams: A100 100% Acrylic Flat A6 Series

3.7.1.5.2 Clear Sealer and Anti-Graffitti Coating:

For Clear Sealer specification see Section 07 19 00, Part 2.01

3.8 INTERIOR PAINT SCHEDULE:

3.8.1 General: Provide the following **premium** Low-Odor/Zero VOC paint systems for the various substrates, as indicated.

3.8.1.1 **Gypsum Drywall Systems:** Below is 3-coat flat finish.

3.8.1.1.1 Flat Finish:

Prime Coat: Interior vinyl acrylic base primer coat.
Sherwin Williams: ProMar 200 Zero VOC Primer B28W2600

Second and Third Coat: Interior flat latex base paint.
Sherwin Williams: ProMar 200 Zero VOC Flat B30-2600

3.8.1.1.2 Egg Shell Finish: Acrylic Enamel Finish; 3 coats with total dry film thickness less than 3.6 mils.

Prime Coat: Interior latex base primer coat.
Sherwin Williams: ProMar 200 Zero VOC Primer B28W2600

Second and Third Coat: Interior Acrylic Egg Shell Enamel
Sherwin Williams: ProMar 200 Zero VOC Eg-shel B20-2600

3.8.1.1.3 Semi-Gloss Finish: Acrylic Finish, 3 coats with total dry film thickness not less than 4.0 mils.

Prime Coat: Interior latex base primer coat.
Sherwin Williams: ProMar 200 Zero VOC Primer B28W2600

Second and Third Coat: Interior Acrylic Semi Gloss Enamel
Sherwin Williams: ProMar 200 Zero VOC Semigloss B31-2600

3.8.1.1.4 High Performance Epoxy Gloss Finish: 3 coats with total dry film thickness not less than 4.0 mils.

Prime Coat: Interior Epoxy base primer coat.
Sherwin Williams: ProMar 200 Zero VOC Primer B28W2600

Second and Third Coat:
Sherwin Williams: ProIndustrial WB Catalyzed Epoxy B73-300

3.8.1.2 **Ferrous Metal:** Provide pretreatment of surface as required.

3.8.1.2.1 Non-blocking Semi-gloss acrylic finish:

Prime Coat:
Sherwin Williams: ProCryl Universal Primer B66-310

Second and Third Coat:
Sherwin Williams: ProIndustrial Acrylic Semi-gloss B66-650 Series

3.8.1.3 **Painted Woodwork:**

3.8.1.3.1 Non-blocking Semi-Gloss Acrylic Enamel Finish: 3 coats.

Prime Coat: Interior undercoat

Sherwin Williams: PrepRite ProBlock Primer B51W8020
Second and Third Coat:
Sherwin Williams: ProIndustrial Acrylic Semi-gloss B66-650 Series

3.8.1.5 **CMU**:

3.8.1.5.1 Eggshell Enamel Finish: 3 coats

Block Filler:
Sherwin Williams: PrepRite Block Filler B25W25
Second and Third Coat:
Sherwin Williams: ProMar 200 Zero VOC Eg-shel

3.8.1.5.2 Clear Sealer:

For Clear Sealer specification see Section 07 19 00, Part 2.01

3.8.1.6 **Cement Plaster/Concrete Walls and Ceilings**:

3.8.1.6.1 Eggshell Enamel Finish: 3 coats

Primer:
Sherwin Williams: Epoxy Tilt Up Primer B42WW49

Second and Third Coat:
Sherwin Williams: ProMar 200 Zero VOC Eg-shel

3.8.1.6.2 Clear Sealer Concrete Walls and Ceilings:

For Clear Sealer specification see Section 07 19 00, Part 2.01

3.8.1.6.3 Clear Sealer, Concrete Floors:

For Clear Sealer specification see Section 03 30 00, Part 2.1.13

END OF SECTION 09 91 00

SECTION 10 01 01 – MISCELLANEOUS SPECIALTIES

PART 1 - GENERAL

1.1 WORK SPECIFIED HEREIN - All labor, material, equipment, and services necessary to furnish and install all items as indicated or specified,

1.2 SUBSTITUTIONS - In accordance with Division 1.

1.3 SUBMITTALS - Submit product data, shop drawings and samples in accordance with Section 01 33 00 for all work under this Section.

PART 2 - PRODUCTS

2.1 Materials:

2.1.1 Trash Can: Trash Can Source (800-291-9534) 5 gal. Metallic Series #T144-1888. Open top stainless steel trash receptacle 10” D x 15” H or approved equal.

Provide one Trash Can per spec in Locker Room 1, Locker Room 2, and Utility 1.

2.1.2 Stainless Steel Mount Corner Guards: In Pro Corporation, Door and Wall Protection System, Surface Mount 4' x 1 1/2" Cement-On or approved equal, 16 gage SS Type 430 with 1/8” radius and No. 4 Satin finish. Provide manufacturers warranty, install per manufacturers directions.

2.1.3 TV Mounting Arm: Sanus Model VL F220-B1, or approved equal, full motion tilt and swivel mounting bracket for flat panel TV, color black, 37”-56” panel maximum – locate at Ready Room #202.

2.1.4 Gurney/Chair: Hausted APC Manual Gurney/Chair (Refurbished) or approved equal. Online at Buckeye Medical, SKU HA- APCM.

2.1.5 Binocular Mounting Arm: ICW, USA 1487 Kingsley Drive, Medford, OR 97504. 800-558-4435, ICWUSA.com Part No. T2EQ-CE5-TB, Black T2 Elite ceiling mount with 5" extension or approved equal.

2.1.6 Binocular: Fujinon Meibo 15x80, "Big Eyes", no substitutions.

2.1.7 Perforated Lattice Patterned Grilles for Cabinetry: Air Flex Industries, Inc. (631-752-1234) Pattern: Number 1011, or approved equal. 36” H x 12” W with 1” margin all sides typical. Pattern repeat ¼” with ¼” bar, open area 25%. Black anodized finish, mount with matching flat head screws.

2.1.8 Bike Rack: Commercial Bike Rack Model WP158-7-IG-G, 1 5/8" O.D. galv structural steel tubing with 5 loops as manufactured by Belson Outdoors (800-323-5664) or approved equal.

2.1.9 Bird Control Products: Bird Control Products; Bird Wire, Springs, Crimps, Bases, 5" SS Posts, Quick Adhere, and SS Bird Spikes for a complete system as shown and

located on the drawings. Products as manufactured by Bird B Gone Inc., Professional Bird Control Products (800-392-6915), www.birdbgone.com or approved equal.

PART 3 - EXECUTION

3.1 Deliver and install all equipment at locations indicated on the drawings. Where equipment is to be built into cabinet work, coordinate information with millwork supplier to insure proper clearance.

3.2 Appliances and equipment shall be free of surface and other defects, and shall be completely operational.

3.3 WARRANTY - Provide manufacturer's standard warranty and operating instructions on all equipment furnished under this section.

END OF SECTION 10 01 01

SECTION 10 14 00 - SIGNAGE

PART 1 – GENERAL:

1.1 RELATED DOCUMENTS AND DESCRIPTION OF WORK:

The work specified herein includes labor, materials, equipment, and services necessary to furnish and install the exterior signage, exterior address numbers on each building, and interior door and wall signs as listed below. See drawings for sizes and location(s) of the exterior signs.

1.2 SUBSTITUTIONS:

In accordance with City requirements. .

1.3 SUBMITTALS:

Submit shop drawings in accordance with Section 01 33 00.

PART 2 – PRODUCTS:

2.1 MATERIALS FOR SIGNS:

2.1.1 Exterior Signage:

2.1.1.1 Cast metal lettering in brushed aluminum finish to be Kynar paint RAL #3027 Raspbeery Red. . Letter style shall be Optima as manufactured by Gemini Incorporated. Mounting: Direct surface mounted.

Quantity	Type
(2)	"700" Project Address Numbers, Size: 6" tall by ¾" deep
(2)	"SOUTH MISSION BEACH LIFEGUARD STATION" Project Name, Size: 8" tall by ¾" deep

2.1.1.2 Plaques shall be solid cast Aluminum (tactile as noted) as manufactured by Pacific Bronze & ADA Signs. www.pacificarchitectural.com Plaque background color shall be the natural metal finish sealed and the raised lettering and pictoral symbols shall be black.

Quantity	Type
(7)	"ACCESSIBLE" with Braille, arrow and handicapped symbol, Size: 6x8

2.1.1.3 Vinyl Cut Lettering on Metal Doors

Quantity	Type
(1)	"ELECTRICAL ROOM", Font: Sans Serif, Height" 1" Tall, Color: White
(1)	"FIRE PROTECTION RISER", Font: Sans Serif, Height" 1" Tall, Color: Red

2.1.1.4 Parking & Site signage per City Standards and details on plans.

2.1.2 Interior Signage (Tactile as noted):

2.1.2.1 Substrate: Black, 1/4" Matt Acrylic. All face edges to be eased and all corners to have 1/8" radius.

2.1.2.2 Face: Plastic Laminate. See Section 09 06 00 for manufacturer and product selection.

2.1.2.3 Raised Lettering / Pictoral Symbols 1/32" Appliqué: Manufacturer: Rowmark, Product: ADA Alternate, Color: See Section 09 06 00

2.1.2.4 Raised Lettering Height: 5/8", Font: Sans Serif and Braille

2.1.2.5 Braille: Contracted (Grade II) Braille domed or rounded raised a minimum of 1/40"

2.1.2.6 Attach signs to wall with 3M VBH Heavy Duty (double sided) mounting tape.

2.1.2.7 Quantity and Size Schedule. *See plans for Type of sign

Type*	Quantity	Wall/Door Signs
A	(0)	Female: Woman pictoral, Shape: Round
B	(0)	Male: Male pictoral, Shape: Triangle
C	(6)	Unisex: Male / Female pictoral, Shape: Round with triangle interior
E	(0)	"WOMEN" with Braille and handicap symbol
E	(0)	"MEN" with Braille and handicap symbol
E	(6)	"UNISEX" with Braille and handicap symbol
E	(5)	"EXIT" Signs with Braille
E	(0)	"EXIT ROUTE" signs with Braille
E	(2)	"EXIT STAIR DOWN" signs with Braille
E	(1)	"COMMUNICATION ROOM" signs with Braille
E	(4)	"SHOWER" with Braille and handicap symbol
F	(2)	"THIS DOOR TO REMAIN UNLOCKED WHEN BUILDING IS OCCUPIED"

PART 3 - INSTALLATION

3.1 The signage subcontractor, at their option, may use the Resident Engineer and the Architect's documents/files as a base to modify and provide camera-ready artwork for the exit plan signage. Match design of the other interior signs and mount in accordance with manufacturer's written instructions (double stick tape and silicone). Provide Shop Drawings of all signs prior to manufacture and installation. Install all signage in locations approved by the local agency, code sections and reviewed/approved by the Resident Engineer and the Architect.

END OF SECTION 10 14 00

SECTION 10 21 16 - SOLID PLASTIC TOILET PARTITIONS AND SCREENS

Floor Mounted Overhead Braced with 8" Wrap Around Hinges and Plastic Continuous Wall Brackets.

PART 1 GENERAL

1.1 SUMMARY

A. Section Includes:

1. Solid plastic toilet compartments, floor mounted overhead braced.
2. Solid plastic urinal screens, wall hung.

B. Documents affecting work of this section include, but are not necessarily limited to, General Conditions, Supplementary Conditions, Special Conditions and Division 1.

1.2 REFERENCES

A. International Code Council (ICC) International Building Code (IBC) Latest Edition

1. Chapter 8 Section 803.
2. Chapter 11 Section 1109

B. National Fire Protection Agency (NFPA)NFPA 101 Life Safety Code

1. Chapter 10
2. Chapter 14

C. 2010 California Fire Code

1. Chapter 8.

D. American Society for Testing and Materials

1. ASTM E-84 Surface Burning Characteristics of Building Materials.

E. 2010 Amended California Building Code Part 2 Title 12California Code of Regulations

F. U.S. Green Building Council Leadership in Energy and Environmental Design (LEED) Program, Version 2.1

1.3 SUBMITTALS

A. Shop Drawings and Product Data:

1. Submit in accordance with Section 01 33 00.
2. Submit product data on panel construction, hardware, and accessories.

B. Samples:

1. Submit sample of partition panels, illustrating panel finish, color, and sheen and quarter scale model if requested by the Resident Engineer and the architect.

C. Certification:

1. Submit certification showing independent testing calculations that compartments comply with ASTM E84 to Class B requirements, Flame spread <75, Smoke development < 450.

1.4 QUALITY ASSURANCE

A. Manufacturers; Legacy Polymer Products, INC. as represented by Service Oriented Sales, Ph (877) 767 4636, Fax (818) 914 6562. Gary@sos.to

B. Equivalent products of other manufacturers will be considered in accordance with the substitution provision as specified.

1.5 REGULATORY REQUIREMENTS

A. Comply with 2010 California Building Code. Accessibility to Public Buildings, Public Accommodations, Commercial Buildings and Publicly Funded Housing.

B. American Society for Testing Material ASTM E84 Class B Fire Rating (Class II) - Flame Spread (26-75) Smoke Developed < 450

1.6 FIELD MEASUREMENTS

A. Verify that field measurements are as indicated on shop drawings.

1.7 COORDINATION

A. Coordinate backing in walls. Backing by others.

1.8 WARRANTY

A. Provide manufacturer's standard 25 year warranty, to include breakage, corrosion or delamination of installed plastic components and door latch/ strike system. Defective components shall be replaced. Labor for reinstallation not included.

PART 2 PRODUCTS

2.0 SYSTEMS

Manufacturers; Legacy Polymer Products, INC. as represented by Service Oriented Sales, Ph (877) 767 4636, Fax (818) 914 6562. Gary@sos.to or approved equal.

A. Floor Mounted Overhead Braced, Poly-Blend System using Aluminum Wrap around Hinge, and Plastic Continuous Wall Bracket features.

2.1 MATERIALS

A. Solid Plastic: High density polyethylene (HDPE) containing a minimum of 30% recycled resin, manufactured under high pressure forming a single component section that is waterproof, nonabsorbent, with a self-lubricating surface resistant to marking with writing utensils.

2.2 COMPONENTS

A. Pilaster Shoe: Plastic.

B. Attachments, Screws, and Bolts: ASTM A167; Type 304 Stainless Steel.

C. Through Bolts and Nuts: Type 304 stainless steel, Vandal resistant type.

D. Hardware:

1. Hinges: 8 inch Aluminum Wrap around hinge system.

2. Door Latch Housing: Aluminum extrusion with clear anodized finish, surface mounted and fastened to door with Type 304 stainless steel vandal resistant through bolts. Slide bolt and button shall be "Tough Coat Black" finish. Thumb turn type not acceptable in order to meet Handicap codes.

3. Strike and Keeper: 6” long extruded aluminum with clear anodized finish, equipped with rubber bumper, and fastened to pilaster with vandal resistant through bolts.

4. Equip each door with Aluminum sliding door latch and metal coat hook with bumper. Provide for emergency access.

5. Provide metal door pull and wall stop for out-swinging doors. Equip handicap doors with inside and outside pulls.

6. Wall and Panel Brackets: 54” long, continuous plastic channel brackets.

7. Headrail: Heavy Duty double ridge (single point headrail not acceptable).

2.3 FABRICATION

A. Fabricate partitions from Solid 1” thick HDPE material with finished faces, free of saw marks, and all edges machined to .250 inch radius**.**

B. Bevel corners and edges of cutouts.

C. Doors, panels, pilasters.

1. Thickness: 1 inch minimum.

2. Door Width: 24 inches minimum.

3. Door Width for physically disabled: door as front access to compartment: minimum 32 inch clear opening; for side access to compartment: minimum 34 inch clear opening.

4. Door Height: 55 inches, mounted 14 inches above floor.

5. Pilaster Height: 82 inches.

6. Panel Height: 55 inches, mounted 14 inches above floor.

7. Aluminum edging strips to be fastened to the bottom edge of all doors and panels.

D. Urinal screens:

1. Thickness: 1 inch minimum.

2. Screen Width: 24 inches minimum.

3. Screen Height: 42 inches mounted 14 inches above floor.

4. Aluminum edging strips to be fastened to the bottom edge.

2.6 FINISHING

A. Color of HDPE: Poly-Blending selection of manufacturer's full range of colors.

B. Stainless Steel Surfaces: No. 4 satin finish.

C. Aluminum: Anodized clear natural color

PART 3 EXECUTION

3.0 EXAMINATION

A. Verify correct spacing of and between plumbing fixtures

B. Verify correct location of built-in framing, anchorage, and backing.

C. Proceed with installation only after unsatisfactory conditions have been corrected.

3.1 INSTALLATION

A. Handle Partitions in accordance with recommendations of WDMA I.S. 1-A, "Care and Installation at Job Site." Store all material flat.

B. Install partitions secure, rigid, plumb, and level in accordance with manufacturer's instructions.

C. Attach continuous wall brackets securely to walls using vandal resistant stainless steel fasteners spaced maximum 13 inches o/c.

D. Locate head rail joints at pilaster center lines, and use end caps on exposed ends.

E. Shoes anchored to minimum 2" solid flooring with 2 1/2" #14 screws and plastic anchors. Pilaster secured within shoe with vandal resistant through bolt

F. Adjust all doors and hardware and other moving or operating parts to function smoothly and correctly.

G. Field touch-up of scratches or damaged finish will not be permitted. Replace damaged or scratched materials with new materials.

3.2 ERECTION TOLERANCES

A. Maximum 1" gap panel/pilaster to wall.

B. Maximum Variation from True Position: 1/4 inch. Clearance at vertical edges of doors shall be uniform top to bottom and shall not exceed 1/4 inch.

C. Maximum Variation From Plum: 1/8 inch.

3.2 CLEANING

A. Clean finished surfaces under Section 01 74 00.

B. All surfaces shall be free of imperfections, scratch marks, blemishes or color variations.

C. Remove and replace any components indicating evidence of imperfections.

END OF SECTION 10 21 16

SECTION 10 28 13 - TOILET ROOM ACCESSORIES

PART 1 - GENERAL

1.1 RELATED DOCUMENTS AND DESCRIPTION OF WORK:

The work includes furnishing, delivery and installing toilet room accessories as indicated on drawings and as specified herein. The Conditions of the Contract and Division 1 apply to this section as fully as if repeated herein.

1.2 QUALITY ASSURANCE:

1.2.1 Acceptable Manufacturers: Bobrick Washroom Equipment, Inc. or approved equal. The product model numbers indicated on the drawings are generally those of Bobrick Washroom Equipment, Inc.

1.2.2 Accessories shall be products of a single manufacturer. Keyed (tumbler lock) accessories shall be keyed alike with the exception of coin receiving boxes on vending equipment.

1.3 SUBMITTALS:

1.3.1 Comply with requirements of Section 01 33 00.

1.3.2 Product Data: Manufacturer's catalog and data sheets, parts list, and installation requirements for each accessory item specified.

1.3.3 Operation and Maintenance Data: Maintenance data, operating instructions and keys required for each type of equipment and lock.

1.4 DELIVERY, STORAGE, AND HANDLING:

1.4.1 Deliver and store product in manufacturer's original unopened containers. Protect containers from damage. Do not unpack product until needed for installation. Handle and install product in a manner to prevent scratching or other damage.

PART 2 - PRODUCTS

2.1 PUBLIC RESTROOMS, RESTROOMS, LOCKER ROOMS & JANITOR CLOSET:

2.1.1 Provide toilet room accessories in the model numbers and locations shown on the drawings: Bobrick Washroom Accesories or approved equal.

PART 3 - EXECUTION

3.1 INSPECTION:

3.1.1 Check wall opening for correct dimensions, plumbness of blocking or frames, and other preparation that would affect installation of accessories.

3.1.2 Check areas to receive surface mounted units for conditions that would affect quality and execution of work.

3.1.3 Verify spacing of plumbing fixtures and toilet partitions that affect installation of accessories.

3.1.4 Do not begin installation of washroom accessories until openings and surfaces are acceptable.

3.2 INSTALLATION:

3.2.1 Install accessories at locations and heights indicated level and plumb. Installation methods shall be in accordance with manufacturer's recommendations. All exposed fasteners to be tamper-proof. Finish of exposed fasteners to match items secured.

3.2.2 Install manufacturer's recommended anchor system for all grab bars.

3.2.3 Conceal evidence of drilling, cutting and fitting on adjacent finishes.

3.2.4 Fit flanges of accessories snug to wall surfaces. Caulk gaps between flanges and finish wall surfaces after accessories are installed.

3.2.5 Contractor shall mirror true vertical with continuous border shim behind mirrors to fill void created by wainscot of ceramic tile. Material of shim to be approved by the Resident Engineer and the Architect.

3.3 ADJUST AND CLEAN:

3.3.1 Adjust accessories for proper operation.

3.3.2 Clean and polish exposed surfaces prior to final inspection.

3.3.3 Deliver accessories schedule, keys, and parts manual as part of project close-out documents for Owner's permanent records. Provide two sets of the following items of manufacturer's literature:

3.3.3.1 Technical data sheets for each item used for the project.

3.3.3.2 Service and parts manual.

3.3.3.3 Name of local representative to be contacted in the event of need of field service or consultation.

END OF SECTION 10 28 13

SECTION 10 28 19 - SHOWER DOORS

PART 1 - GENERAL

1.1 RELATED DOCUMENTS AND DESCRIPTION OF WORK:

The work includes the furnishing and installing of all glass work complete, as shown and noted on the drawings and as specified. The Conditions of the Contract and Division 1 apply to this section as fully as if repeated herein.

1.2 SUBMITTALS:

1.2.1 Submittal procedures and quantities are specified in Section 01 33 00.

1.2.2 Product Data: Submit manufacturer's data for shower door and accessory material specified, including manufacturer's recommendations for installations.

1.2.3 Samples: Submit factory labeled samples of each type of glazing material specified, gaskets and colors of glazing compounds for approval. No glazing material, gaskets, or glazing compounds shall be purchased until all samples have been approved.

1.2.4 Certificate of Compliance: Certify and label each product to indicate materials meet specified requirements.

1.3 DELIVERY, STORAGE, AND HANDLING:

1.3.1 Delivery: Do not deliver shower doors to the site until the areas are ready to receive the glass.

PART 2 - PRODUCT

2.1 SHOWER DOORS: Shall be 1000-S/L Pivot Type as manufactured by Century Shower Door Inc. (800) 824-9350, info@showerdoor.com or prior approved equal. Frame shall be extruded aluminum alloy 6463-T5 brushed silver anodized finish. Glass shall be 'rain' pattern safety glass nominal 5/32 inch thick. Continuous aluminum piano hinge matching frame finish. All screws, nuts, bolts, or fasteners shall be cadmium-plated and iridite finished to prevent corrosion.

PART 3 - EXECUTION

3.1 Install shower doors and accessories in accordance with manufacturer's instructions. Install plumb and level, securely and rigidly anchored with doors operating freely and smoothly.

END OF SECTION 10 28 19

SECTION 10 44 13 - FIRE EXTINGUISHERS, CABINETS AND ACCESSORIES

PART 1 - GENERAL

1.1 RELATED DOCUMENTS AND DESCRIPTION OF WORK:

1.1.1 The work includes furnishing and installing portable fire extinguishers, cabinets and accessories as indicated on drawings and as specified. The Conditions of the Contract and Division 1 apply to this section as fully as if repeated herein.

1.1.2 Fire hose cabinets and valve cabinets are specified in Division 21.

1.1.3 Fixed fire protection systems are specified in Division 21 sections.

1.2 QUALITY ASSURANCE:

1.2.1 Coordination: Verify that fire extinguisher cabinets are sized to accommodate fire extinguishers of type and capacity indicated.

1.2.2 UL-Listed Products: Provide new portable fire extinguishers which are UL-listed and bear UL "Listing Mark" for type, rating and classification of extinguisher indicated.

1.3 SUBMITTALS:

1.3.1 Submittal procedures and quantities are specified in Section 01 33 00.

1.3.2 Product Data: Submit product data for each type of product included in this section. For fire extinguisher cabinets include roughing-in dimensions and details showing mounting methods, relationships of box and trim to surrounding construction, door hardware, cabinet type and materials, trim style and door construction and panel style and materials. For initial selection of colors and finishes, submit manufacturer's color cards showing full range of standard colors available.

PART 2 - PRODUCTS

2.1 MATERIALS:

2.1.1 Acceptable Manufacturers: Subject to compliance with requirements, manufacturers offering products which may be incorporated in the work include, but are not limited to, the following:

Potter-Roemer, Inc.

2.1.2 Fire Extinguishers:

2.1.2.1 General: Provide fire extinguishers for each extinguisher cabinet and other locations indicated, in colors and finishes selected by the Resident Engineer and the Architect from manufacturer's standard which comply with requirements of governing authorities. Abbreviations indicated below to

identify extinguisher types relate to UL classification and rating system and not necessarily to type and amount of extinguishing material contained in extinguisher.

2.1.2.2 Multi-Purpose Dry Chemical Type: Provide one for each cabinet, UL-rated 5 lb. minimum nominal capacity in enameled steel container, for Class A, Class B and Class C fires per plan notes and Municipal/Governing Agency Fire Department requirements.

2.1.3 Semi-recessed Fire Extinguisher Cabinets shall be 5 ¾ inch deep 70-62 (Stainless Steel)-DVL-4 (Alta Series) as manufactured by Potter-Roemer, Inc.

Surface Mounted Fire Extinguisher Cabinets shall be 5 ¾ inch deep 70-62 (Stainless Steel)-DVL-4 (Alta Series) as manufactured by Potter-Roemer, Inc.

2.1.3.1 General: Provide fire extinguisher cabinets where indicated, of suitable size for housing fire extinguishers of types and capacities indicated.

2.1.3.2 Construction: Manufacturer's standard enameled steel box, with trim, frame, door and hardware to suit cabinet type, trim style, and door style indicated. Weld all joints and grind smooth. Miter and weld perimeter door frames.

2.1.3.3 Cabinet Type shall be cabinet box (tub) fully recessed in walls of sufficient depth to suit style of trim indicated.

2.1.3.4 Trim Style: Fabricate trim in one piece with corners mitered, welded and ground smooth. Exposed trim shall be one-piece square-edge combination trim and perimeter door frame overlapping surrounding wall surface with exposed trim face and wall return of 1/4" to 5/16" at outer edge (back-bend).

2.1.3.5 Door Material and Construction: Doors shall be stainless steel panel.

2.1.3.6 Door Hardware: Provide manufacturer's standard door operating hardware of proper type for cabinet type, trim style, and door material and style indicated. Provide concealed or continuous type hinge permitting door to open 180 degrees.

2.1.4 Factory Finishing of Fire Extinguisher Cabinets:

2.1.4.1 General: Comply with NAAMM "Metal Finishes Manual" for finish designations and application recommendations except as otherwise indicated. Apply finishes in factory after products are assembled. Protect cabinets with plastic or paper covering, prior to shipment.

2.1.4.2 Preparation: Clean surfaces of dirt, grease, and loose rust or mill scale.

ART 3 - EXECUTION

3.1 INSTALLATION:

3.1.1 Install items included in this section in locations and at mounting heights indicated, or if not indicated, at heights to comply with applicable regulations of governing authorities.

3.1.1.1 Prepare recesses in walls for fire extinguisher cabinets as required by type and size of cabinet and style of trim and to comply with manufacturer's instructions.

3.1.1.2 Securely fasten mounting brackets and fire extinguisher cabinets to structure, square and plumb, to comply with manufacturer's instructions.

3.2 IDENTIFICATION:

Identify existence of fire extinguisher in cabinet with lettering spelling "FIRE EXTINGUISHER" applied to door by silk screen. Provide lettering to comply with requirements indicated for letter style, color, size, spacing and location as selected by the Resident Engineer and the Architect from manufacturer's standard arrangements.

END OF SECTION 10 44 13

SECTION 10 51 26 - PLASTIC LOCKERS

PART 1 –GENERAL

1.1 WORK OF THIS SECTION

A. The work of this section includes providing solid plastic polymer Lockers.

1.2 RELATED SECTIONS

A. The WORK of the following Section applies to the WORK of this Section. Other Sections of the Specifications, not referenced below, shall also apply to the extent required for proper performance of this WORK.

1. Section 03 30 00 Cast-in-Place Structural Concrete

1.3 CODES

A. `The WORK of this Section shall comply with the current editions of the following codes as adopted by the Local code, if applicable.

1. Uniform Building Code

1.4 STANDARD SPECIFICATIONS

A. Except as otherwise indicated, the current editions of the following apply to the WORK of this Section:

ASTM B 209 Aluminum and Aluminum-Alloy Sheet and Plate

ASTM B 221 Aluminum and Aluminum-Alloy Extruded Bars, Rods, Wire, Shapes, and Tubes

ASTM B 241 Aluminum and Aluminum-Alloy Seamless Pipe and Seamless Extruded Tube

1.5 SHOP DRAWINGS AND SAMPLES

A. The following shall be submitted in compliance with Section 01 33 00:

1. Manufacturer’s catalogs containing technical data and installation instructions, shop drawings, and colors available.

2. Samples of all the materials, finish, and color. The samples shall be clearly marked to show the manufacturer’s name and product identification. The manufacturer shall offer scale model and full set of color samples.

3. Shop drawings for solid plastic locker benches, verifying all dimensions affecting the installation. Lockers and benches shall be shown in detail,

including method of installation, required fillers, trim, and accessories. Locker numbering sequence information shall be provided if indicated.

1.6 PRODUCT DELIVERY, STORAGE, AND HANDLING

A. Delivery of Materials: Products shall be delivered in original, unbroken packages, containers, or bundles bearing the name of the manufacturer.

B. Storage: Products shall be carefully stored in a manner that will prevent damage and in an area that is protected from the elements.

C. Solid plastic locker shall not be delivered until the building is enclosed and ready for locker installation.

D. Solid plastic locker finishes, as well as adjacent surfaces and materials shall be protected from damage or marring during installation.

PART 2 – PRODUCTS

2.1 MATERIALS, GENERAL

A. Solid Polyethylene Resin**:** High density, solid polymer resin formed under high pressure, with homogenous color throughout. Provide material with seamless construction with edges rounded and free from saw marks. Colors as selected by the Resident Engineer and the Resident Engineer and the architect from manufacturer's standards.

1. Internal Sides, Shelves, Tops and Bottoms: Fabricated from high impact, high density, polyethylene (HDPE) 3/8" thick with homogenous natural white color throughout. Provide 1 shelf per locker. Slope top 10 degree standard.

2. Doors, Door frames, Trim and End panels: Made from high density polyethylene (HDPE) Solid plastic 1/2" thick with homogeneous color throughout. Injection molded components not acceptable.

3. Base; Lockers to be installed on a 4" high base.

4. Material Testing: All solid plastic components shall resist deterioration and discoloration when subjected to the following chemicals and tested in accordance with corrosion-testing procedure established by the United States Plastic Corporation:

Acetic Acid 80%	Caustic Soda	Nicotine
Ammonium Phosphate	Cooper Chloride	Lime Sulfur
Acetone	Chlorine Water	Soaps
Ammonia Liquid	Core Oils	Potassium Bromide
Bleach 12%	Hydrochloric Acid 40%	Trisodium Phosphate

Brine	Hydrogen Peroxide 30%	Sodium Bicarbonate
Borax	Isopropyl Alcohol	Urea and Urine
Citric Acid	Lactic Acid 25%	Vinegar

B. Hardware:

1. Latch: Continuous spring loaded slide latching mechanism that is capable of accepting a padlock and shall be securely fastened to the door. Latch mechanism shall be color matched to the locker, attached to the entire length of the door providing a continuous security latch. Provide minimum of (2) two (one in each Locker Room) ADA compliant Latching mechanism.

2. Handle: Plastic Handle color matched to locker. ADA compliant operating with less than 5 lbs of force. Latch handle to operate independently of latch bar.

3. Hinges: Continuous, integrated into the full length of the door and locker frame, made from entirely plastic to color match the locker. Metal knuckles or pins not acceptable.

4. Coat Hooks: Two prong type made from high impact plastic attached with theft resistant screws or rivets. Three internal hooks and one external hook per locker.

2.2 FABRICATION, GENERAL

A. Construction: Lockers shall be fabricated square, rigid, and without warp, with faces flat and free of dents, scratches or chips.

B. Solid plastic locker components shall be secured using dado routing and continuous welds and shall provide a solid and secure construction. Adjacent lockers shall not share a common side panels.

C. Ventilation: Slotted vents shall be provided in door face as follows:

1. Single and Double-tier lockers shall have not less than 6-slotted openings top and bottom.

2. Multi-tier lockers shall have not less than 6-slotted openings at top.

2.3 LOCKER ACCESSORIES

A. Locking: Lockers shall be fabricated to receive the following locking devices: **Padlock Hasp with Master Lock #1525 combination padlock.**

B. Number Plates**:** Number plates shall be manufacturer's standard etched, embossed or stamped, number plates with numerals not less than 3/8 inch high fastened with theft resistant rivets. Lockers shall be numbered in sequence as directed by the Resident Engineer and the architect. Number plates shall be attached to face of each locker door, near the top, centered using factory pre-drilled holes.

C. Filler Panels: Filler panels shall be provided where indicated or required for a complete installation. Panels shall be fabricated of not less than ½ inch solid plastic, and finished to match locker units.

2.4 LOCKER UNITS

A. Locker units shall conform to the following requirements:

1. Lockers shall consist of 50% single tier lockers and 50% double tier lockers. All lockers to be **(18" x 18"sizes)** for mounting on curb, securely tied in banks as indicated; provided complete with number plates.

2.5 MANUFACTURERS

A. Products of the types indicated shall be as manufactured by one of the following (or approved equal by the Resident Engineer and the architect):

Bradley LenoxLocker, XL Locker Ph 800.272.3539

Legacy Royal Lockers as Represented by Service Oriented Sales Ph (877) 767-4636

PART 3 – EXECUTION

3.1 LOCKERS

A. Lockers shall be fastened to the structures in accordance with manufacturer's printed recommendations and in conformance with the Uniform Building Code. Frames and doors shall form a flush exterior when installed. Lockers shall be plumb, level, rigid and securely fastened in banks.

B. Fastenings shall be spaced not more than 48 inches on center, and applied through back-up reinforcing plates where necessary to avoid distortion. Fasteners shall be concealed insofar as possible.

C. Locker shall be jointed side by side with stainless steel theft resistant through bolts.

D. Trim filler panels shall be installed where indicated. Using concealed fasteners to provide flush, hairline joints against adjacent surfaces.

3.2 ADJUST AND CLEAN

A. Doors and latches shall be adjusted to operate easily without binding. Integral locking devices shall be verified as operating properly.

B. Marred finishes shall be touched up, but units that cannot be restored to factory-finished appearance Shall be replaced. Only materials and procedures recommended or furnished by locker manufacturer shall be used.

END OF SECTION 10 51 26

SECTION 10 75 16 – FLAG POLE

PART 1 - GENERAL

1.1 WORK SPECIFIED HEREIN - All labor, material, equipment, and services necessary to furnish and install all items as indicated or specified.

1.2 SUBMITTALS - Submit product data and shop drawings in accordance with section 01 33 00 for all work under this Section.

PART 2 - PRODUCTS

2.1 MATERIALS - Flagpole shall be 30’ exposed length black anodized aluminum Sentry Model #S30060188 by Concord Industries - Flagpoles (800) 527-3902 or equal. Butt diameter is 6” with a wall thickness of 0.188. Flagpole shall have internal equipment and locking halyard box.

PART 3 - EXECUTION

3.1 INSTALLATION - Install per manufacturer’s standard with concrete footing detail for ground set type on foundation specified by manufacturer with a structural engineer’s review/stamp.

3.2 Provide bird-proof wire spikes at top/finial ball.

END SECTION 10 75 16

SECTION 11 31 00 - KITCHEN AND LAUNDRY EQUIPMENT

PART 1 - GENERAL

1.1 RELATED DOCUMENTS & DESCRIPTION OF WORK:

The work includes the furnishing and installation of residential equipment as indicated. The Conditions of the Contract and Division 1 apply to this section as fully as if repeated herein.

1.2 SUBMITTALS:

1.2.1 Submittal procedures and quantities are specified in Section 01 33 00.

1.2.2 Product Data: Submit manufacturer's specifications and installation instructions for each type of residential equipment, including data indicating compliance with requirements. Submit operating and maintenance instructions for each item of residential equipment.

1.2.3 Product Warranties: Submit manufacturer's **extended** written warranty for five (5) years for each item of equipment.

1.3 CERTIFICATION:

1.3.1 Certification Labels: Provide residential equipment, which complies with standards and bears certification labels as follows:

Energy Ratings: Provide energy guide labels with energy cost analysis (annual operating costs) and energy information as required by Federal Trade Commission.

UL Standards: Provide residential equipment with UL labels.

1.4 DELIVERY, STORAGE AND HANDLING

1.4.1 Deliver equipment in time to insure uninterrupted progress of the work. Equipment shall be stored in manufacturer's original package until ready for use. Store and handle equipment in a manner to preclude damage.

PART 2 - PRODUCTS

2.1 GENERAL

Provide equipment of type, model, and manufacturer as indicated. Any substitution shall be submitted to the Resident Engineer and the Architect for approval as specified in City Specifications.

2.1.1 Colors: Provide manufacturer's standard stainless steel or as scheduled. Wherever residential equipment by more than manufacturer is installed in same space, provide units with color matching largest equipment item, unless otherwise indicated.

2.2 Food Waste Disposer: Per plumbing

2.3 Refrigerator/Freezer: Side by Side with Drawer GE Profile Series – PFSS2MJYSS

2.4 Electric Range/Oven: GE – JS750SFSS

2.5 Microwave/Hood: GE Profile Series Spacemaker® 1.9 Cu. Ft. Over-the-Range Microwave Oven with Recirculating Venting GE – PNM1971SRSS

2.6 Dryer: GE 4.0 Cu.Ft. Capacity Electric Dryer Model #: DCVH480EKWW , White

2.7 Washer: GE 2.2 DOE Cu. Ft. Frontload Washer Model #: WCVH4800KWW, White

2.8 W/D Stacking Kit: GE Washer/Dryer Stack Bracket Kit Model #: GEFLSTACK, White

2.9 Under-counter Ice Maker: U-Line Model #: SS1095NF

2.10 Dishwasher: GE Dishwasher GDT580SSFSS

2.11 Centrifigal Dryer: Extractor Corporation, Model Suitmate, water extractor. 800-553-3353, info@suitmate.com

PART 3 - EXECUTION

3.1 Inspection: Installer shall verify that all necessary power supply, plumbing and venting are provided at locations indicated in equipment manufacturer's instructions and recommendations. Installer shall verify that equipment would fit snugly in spaces provided. Notify Contractor in writing of any non-conforming conditions. Do not proceed until such conditions have been corrected.

3.2 Install equipment at locations indicated and in accordance to equipment manufacturer's instructions and recommendations.

3.2.1 Built-in Equipment: Securely anchor units to supporting cabinetry or countertops with concealed fasteners. Verify that clearances are adequate for proper functioning and rough openings are completely concealed.

3.2.2 Freestanding Equipment: Place units in final locations after finishes have been completed in each area. Verify clearances are adequate for proper operation of equipment.

3.3 TESTING

Test each item of residential equipment to verify proper operation. Make necessary adjustments.

3.4 ACCESSORIES

Verify that accessory items required have been furnished and installed.

3.5 CLEANING

Remove packing material from residential equipment item sand leave units in clean condition, ready for operation.

END OF SECTION 11 31 00

SECTION 12 24 13 – ROLL-UP SHADES

PART 1 - GENERAL

1.1 RELATED DOCUMENTS & DESCRIPTION OF WORK:

The work includes the furnishing, delivery and installing of horizontal blinds as indicated on drawings and as specified. The Conditions of the Contract and Division 1 apply as fully as if repeated herein.

1.2 QUALITY ASSURANCE:

1.2.1 Provide complete assemblies produced by one manufacturer including hardware, accessory items, mounting brackets and fastenings.

1.2.2 Installer shall be a firm experienced in the proper installation of manual shade systems and approved by the manufacturer. Installer shall submit a list of three completed projects of similar magnitude and complexity in the last 5 years.

1.3 SUBMITTALS:

1.3.1 Submittal procedures and quantities are as specified in Section 01 33 00.

1.3.2 Product Data: Submit manufacturer's product data and installation instructions. Fabricator to submit installation drawings fully detailed in typical and custom install conditions as identified on the drawings. Submit drawings to show plans, elevations, sections, product details, installation details, operational clearances, and relationship to adjacent work.

1.3.3 Samples: Furnish small size operating unit for each type and installation.

1.3.4 Colors: For each product specified, Submit samples representing manufacturer's full range of available colors, materials and patterns for selection by the Resident Engineer and the Architect.

1.3.5 Mock-Up: Provide a mock-up for evaluation of surface preparation techniques and application workmanship.

1.3.6 Finish areas designated by the Resident Engineer and the Architect.

1.3.7 Do not proceed with remaining work until workmanship, color, and sheen are approved by the Resident Engineer and the Architect.

1.3.8 Refinish mock-up area as required to produce acceptable work.

1.4 FIRE RESISTANCE:

1.4.1 Roll-up shade assembly shall be rated as a NFPA Class A interior finish, having a flame spread of 0-25 when tested in accordance with ASTM E-84 test procedures.

1.5 DELIVERY, STORAGE, AND HANDLING

1.5.1 Delivery: Deliver materials to site protected from damage.
1.5.2 Storage:

1.5.21. In accordance with manufacturer's instructions, store materials in manufacturer's unopened packaging in a clean area, free of corrosive fumes and dust, and away from construction activities until ready for installation.

1.5.2.2. Stack materials horizontally using plastic or wood shims to allow for proper and adequate drainage and ventilation.

1.6 PROJECT CONDITIONS

1.6.1 Maintain environmental conditions (temperature, humidity, and ventilation) within limits recommended by manufacturer for optimum results. Do not install products under environmental conditions outside manufacturer's absolute limits.

1.7 WARRANTY

1.7.1 At project closeout, provide to the owner or owners representative a copy of the manufacturer's document outlining the terms and conditions of their limited warranty against manufacturing defect.

PART 2 - PRODUCTS

2.1 MANUFACTURERS

2.1.1 Acceptable Manufacturer: RollEase, Inc., which is located at: 200 Harvard Ave.; Stamford, CT 06902-6320; Toll Free Tel: 800-552-5100; Tel: 203-964-1573; Fax: 203-964-0513; Email: commercial@rollease.com ; Web: www.rollease.com.or approved equal.

2.2 MATERIALS: manual roller shades

2.2.1 R-Series Roller Shade System:

1. Configuration: Single shades.

2. Configuration: Linked shades.

3. R-Series Clutch: Mechanical clutch, comprised of multi-banded, steel springs; size determined by width and height of shade and weight of fabric selected. Exterior clutches use stainless steel operating springs.

    a. Materials: Fiberglass-reinforced, polyester thermopolymer (PBT) resin

    b. Operation: Cord or chain; locks shade in any position with control loop, bi-directional and does not require adjustment or lubrication.

    c. Coordinating Components: Idler.

    d. Color: White.

    e. Color: Natural.

    f. Color: Black.

4. Brackets:

    a. Design: steel stampings with mounting legs. Stampings incorporate tabs and idler locking feature for secure mounting.

    b. Interior Finish: zinc plated steel or powder coated steel.

    c. Exterior Finish: steel with Dacromet coating.

5. Fascia and Pocket Options:

    a. Fascia, Fascia Brackets and Covers

        1. Design: Extruded aluminum “L”-shaped fascia

        2. Size: 3 inches (76mm) x 2.24 inches (57mm)

        3. Size: As determined by shade size

        4. Color: Black

    b. Pockets, closures, end plates and coordinating brackets.

        1. Design: Extruded aluminum to enclose roller tube, brackets and fabric. Closure plate removable to access shade

        2. Size: 3 inches (76mm) x 3.5 inches (88mm).

        3. Size: As determined by shade size

        4. Color: Anodized

6. Control Device: Continuous D30 polyester cord loop.

a. Color: Cocoa.

b. Color:

7. Roller Tube: Extruded aluminum; plain or taped. Tube size determined by fabricator based on window size, fabric selection, and operation.

8. Hem Bar (Internal): Standard, aluminum extrusion enclosed in a fabric hem pocket with heat-welded seams and ends, to match shade cloth selection.

9. Hem Bar (External): Oval hem bar with end caps and screws.

a. Color: Black.

10 SafetyHold3 Tension Device: durable, clear-colored device used to secure loose window covering bead chain and cord loops. Compliant with the 2012 ANSI-WCMA 6.5 standard for safety.

2.3 FABRICATION:

2.3.1 Shade Type 1: Fabric: Phifer Sheerweave solar screen fabric. Composition: PVC-coated polyester yarn. Flame Retardant NFPA 701, M1, B1, B2, Fade Resistant, Bacterial and Fungal Resistant: ASTM G 21 and ASTM G 22, Greenguard certified. Style 4500 (5% open), color from manufacturer's standard, or approved equal.

2.3.2 Shade Type 2: Fabric: PLASTIC-VIEW ATC Mylar transparent shade material - Triplex Eclipse. Plastic-View ATC, Inc., 4585 Runway St., Suite B | Simi Valley, CA 93063 USA. Phone (805) 520-9390 | Fax (805) 520-0260,

or approved equal.

Ryan Voges, General Manager of PV-128 Operations, ryan@pvatc.com

Composition:

PLY; 3
% VISIBLE LIGHT TRANSMISSION; 8.3,
% VISIBLE LIGHT REFLECTION; 8
% ULTRAVIOLET TRANSMISSION; 0 - 1
% GLARE REDUCTION; 91
% SOLAR ENERGY TRANSMISSION; 20.6
WINTER U-VALUE; 1.13
SHADING COEFFICIENT; 0.43
% SOLAR ENERGY REFLECTED; 22.4
% SOLAR ENERGY ABSORPTION; 57.0
% TOTAL SOLAR ENERGY REJECTED; 63.4

2.3.3 Accessories:

1. Fascia:

   a. Materials: Extruded aluminum “L”-shaped in anodized or white.

   b. Brackets: Determined by fascia and motor type.

   c. Size: Determined by motor type, fabric and window opening size.

   d. Finish: As selected by the Resident Engineer and the Architect from manufacturer’s standard color range

2. Pockets: Manufacturer shall provide appropriate dimensional pocket as indicated on approved Shop Drawings; to enclose roller tube, brackets and fabric.

   a. Finish: As selected by the Resident Engineer and the Architect from manufacturer’s standard color range.

3. Closure Plates: removable to access shades

   a. Finish: As selected by the Resident Engineer and the Architect from manufacturer’s standard color range.

4. Side and Sill Blackout Channels: 3-piece design; extruded aluminum construction.

   a. Finish: As selected by the Resident Engineer and the Architect from manufacturer’s standard color range.

5. Cassette:

   a. Materials: Extruded aluminum in anodized, white, vanilla, bronze and black.

   b. Brackets: Determined by Cassette size.

   c. Cassette Size: Size determined by shade roll diameter, operation and window opening size. Max window opening 16 feet.

2.3.4 Field verify dimensions before unit fabrication. Fabricate units to completely fill window wall openings as indicated, from head to sill and unit ends to occur only over mullions or other defined vertical separations, unless otherwise indicated.

PART 3 - EXECUTION

3.1 INSPECTION:

Prior to the start of installation, verify that all interior finish work that have an effect on roll-up shade installation have been completed. If substrate preparation is the responsibility of another trade, notify General Contractor or the Resident Engineer and the Architect of unsatisfactory preparation before proceeding.

3.2 INSTALLATION:

Install units to comply with manufacturer's instructions for type of mountings and operations required. Coordinate with the Resident Engineer and the Architect for interior/between window frame mount or surface mount. **Note special corner installation detail requirements**. Install units plumb and true, securely anchored in place with recommended hardware and accessories to provide smooth, easy operation. Replace any damaged parts.

Contractor shall install roll-up shades on each door and/or window sections per plans/finish schedule. Confirm size prior to fabrication.

3.3 CLEAN UP & PROTECTION:

Clean up any debris generated from the installation. Protect shades from damage until acceptance of the building by the owners. Walk site and building with the Resident Engineer and the Architect prior to installing shades to identify any damaged glazing prior to installation.

END OF SECTION 12 24 13

SECTION 21 13 05 - FIRE PROTECTION COORDINATION

PART 1 - GENERAL

1.1 QUALITY ASSURANCE:

1.1.1 The fire sprinkler system designer/subcontractor shall ensure that all exposed piping, valves, connections, drains, and apparatus of any kind, shall be fully reviewed and coordinated with the Resident Engineer and the Architect. The shop drawings shall explicitly cloud all exposed conditions and shall be reviewed, authorized, and initialed by the Resident Engineer and the Architect prior to installation. The purpose of this review is to insure that all components of this system are placed in as discrete and as minimally impacting a location as possible. Failure by the fire sprinkler system designer/subcontractor to point out and secure the Resident Engineer and the architect review and written approval of all exposed conditions shall result in relocation of any exposed items as directed by the Resident Engineer and the Architect at not additional cost to the Owner.

1.1.2 Plan Check and Shop Drawing:

1.1.2.1 Submit full detailed shop drawing showing size, type, spacing, and location of piping and equipment required for the entire system to the Resident Engineer and the Architect for review and for submittal by the contractor to the City of San Diego Building/Fire Department as required for approval.

1.1.3 Design Calculation:

1.1.3.1 Submit design calculations by a licensed California Engineer for the sprinkler system to the Resident Engineer and the Architect for review and for submittal by the contractor to the City of San Diego Building/Fire Department for approval.

1.1.4 Approved Drawings:

1.1.4.1 Provide copy of Fire Department final stamped/approved plans to the Owner, the Resident Engineer, and the Architect.

PART 2 - PRODUCTS

2.1 The Contractor shall provide and install complete fire protection sprinkler system including but not limited to detector check assembly, post indicator valve, piping, vales, and heads.

2.2 Interior: Contractor shall provide exposed surface brass heads typical unless otherwise noted.

2.3 Exterior: Contractor shall provide semi-recessed lead coated finished heads typical unless otherwise noted

2.4 The Contractor shall also provide the Owner with one safety head capping device for each different type of sprinkler head utilized in the project.

PART 3 - EXECUTION

3.1 Exposed sprinkler heads and cover plates shall typically be placed in the center of the ceiling pattern for the space it is serving.

3.2 Assembly and supports located in rooms or areas left exposed to view shall be painted. Supports shall be installed neatly, true, and vertical. Supports type exposed to view shall be approved with the Resident Engineer and the Architect prior to installation.

3.3 Prior to commencing the work of this section, the contractor shall schedule and attend a meeting at the job site to discuss conformance with requirements of the Contract Documents. Request attendance of representatives from the Resident Engineer, Architect, Contractor, subcontractors (fire sprinkler, electrical, HVAC,) and other parties who are involved

3.4 Sprinkler piping and head layout and installation is required to be **coordinated with the garage doors and operators**, lighting and mechanical plan (fixture and diffuser layout) prior to install.

END OF SECTION 21 13 05

SECTION 21 13 13 - FIRE-SUPPRESSION PIPING

PART 1 - GENERAL

SCHEDULE 1 - RELATED DOCUMENTS:

PRODUCT DATA SHEET 1 - Drawings and general provisions of the Contract, including General and Supplementary Conditions and Division 1 Specification Sections, apply to this Section.

SCHEDULE 2 - SUMMARY:

PRODUCT DATA SHEET 1 - This Section includes the following fire-suppression piping inside the building:

1.1 Wet-pipe sprinkler systems.

PRODUCT DATA SHEET 2 - Related Sections include the following:

1.1 Division 33 Section "Water Distribution" for piping outside the building.

1.2 Division 21 Section "Fire-Protection Specialties" for cabinets and fire extinguishers.

1.3 Division 26 Section "Fire Alarm" for alarm devices not specified in this Section.

SCHEDULE 3 - DEFINITIONS

PRODUCT DATA SHEET 1 - CPVC: Chlorinated polyvinyl chloride plastic.

PRODUCT DATA SHEET 2 - CR: Chlorosulfonated polyethylene synthetic rubber.

PRODUCT DATA SHEET 3 - PE: Polyethylene plastic.

PRODUCT DATA SHEET 4 - Underground Service-Entrance Piping: Underground service piping below the building.

SCHEDULE 4 - SYSTEM DESCRIPTIONS

PRODUCT DATA SHEET 1 - Wet-Pipe Sprinkler System: Automatic sprinklers are attached to piping containing water and that is connected to water supply. Water discharges immediately from sprinklers when they are opened. Sprinklers open when heat melts fusible link or destroys frangible device. All sprinkler piping shall be concealed.

PRODUCT DATA SHEET 2 - Areas to be Covered by Fire Sprinklers: Room 105 Rescue Vehicles, Room 106 Storage, Room 107 Storage.

SCHEDULE 5 - PERFORMANCE REQUIREMENTS

PRODUCT DATA SHEET 1 - Standard Piping System Component Working Pressure: Listed for at least 175 psig (1200 kPa).

PRODUCT DATA SHEET 2 - Fire-suppression sprinkler system design shall be approved by authorities having jurisdiction.

1.1 Margin of Safety for Available Water Flow and Pressure: 10 percent, including losses through water-service piping, valves, and backflow preventers.

1.2 Sprinkler Occupancy Hazard Classifications:

A. Building Service Areas: Ordinary Hazard, Group 1.

B. Electrical Equipment Rooms: Ordinary Hazard, Group 1.

C. General Storage Areas: Ordinary Hazard, Group 1.

D. Mechanical Equipment Rooms: Ordinary Hazard, Group 1.

E. Office and Public Areas: Light Hazard.

1.3 Minimum Density for Automatic-Sprinkler Piping Design:

A. Light-Hazard Occupancy: 0.10 gpm over 1500-sq. ft. (6.3 mL/s over 139-sq. m) area.

B. Ordinary-Hazard, Group 1 Occupancy: 0.15 gpm over 1500-sq. ft. (9.5 mL/s over 139-sq. m) area.

C. Ordinary-Hazard, Group 2 Occupancy: 0.20 gpm over 1500-sq. ft. (12.6 mL/s over 139-sq. m) area.

PRODUCT DATA SHEET 3 - Seismic Performance: Fire-suppression piping shall be capable of withstanding the effects of earthquake motions determined according to NFPA 13 and ASCE 7, "Minimum Design Loads for Buildings and Other Structures": Section 9, "Earthquake Loads" and California Building Code latest edition.

SCHEDULE 6 - SUBMITTALS

PRODUCT DATA SHEET 1 - Product Data: For the following:

1.1 Piping materials, including dielectric fittings, flexible connections, and sprinkler specialty fittings.

1.2 Pipe hangers and supports, including seismic restraints.

1.3 Valves, including listed fire-protection valves, unlisted general-duty valves, and specialty valves and trim.

1.4 Sprinklers, escutcheons, and guards. Include sprinkler flow characteristics, mounting, finish, and other pertinent data.

1.5 Monitors.

1.6 Alarm devices, including electrical data.

PRODUCT DATA SHEET 2 - Shop Drawings: Diagram power, signal, and control wiring.

PRODUCT DATA SHEET 3 - Fire-hydrant flow test report.

PRODUCT DATA SHEET 4 - Approved Sprinkler Piping Drawings: Working plans, prepared according to NFPA 13, that have been approved by authorities having jurisdiction, including hydraulic calculations, if applicable.

PRODUCT DATA SHEET 5 - Field Test Reports and Certificates: Indicate and interpret test results for compliance with performance requirements and as described in NFPA 13. Include "Contractor's Material and Test Certificate for Aboveground Piping" and "Contractor's Material and Test Certificate for Underground Piping."

PRODUCT DATA SHEET 6 - Welding certificates.

PRODUCT DATA SHEET 7 - Field quality-control test reports.

PRODUCT DATA SHEET 8 - Operation and Maintenance Data: For sprinkler specialties to include in emergency, operation, and maintenance manuals.

SCHEDULE 7 - QUALITY ASSURANCE

PRODUCT DATA SHEET 1 - Installer Qualifications:

1.1 Installer's responsibilities include designing, fabricating, and installing fire-suppression systems and providing professional engineering services needed to assume engineering responsibility. Base calculations on results of fire-hydrant flow test.

A. Engineering Responsibility: Preparation of working plans, calculations, and field test reports by a qualified professional engineer.

PRODUCT DATA SHEET 2 - Welding: Qualify processes and operators according to ASME Boiler and Pressure Vessel Code: Section IX.

PRODUCT DATA SHEET 3 - NFPA Standards: Fire-suppression-system equipment, specialties, accessories, installation, and testing shall comply with the following:

1.1 NFPA 13, "Installation of Sprinkler Systems."

1.2 NFPA 24, "Installation of Private Fire Service Mains and Their Appurtenances."

1.3 NFPA 230, "Fire Protection of Storage."

SCHEDULE 8 - COORDINATION

PRODUCT DATA SHEET 1 - Coordinate layout and installation of sprinklers with other construction that penetrates ceilings, including light fixtures, HVAC equipment, and partition assemblies.

SCHEDULE 9 - EXTRA MATERIALS

PRODUCT DATA SHEET 1 - Furnish extra materials described below that match products installed and that are packaged with protective covering for storage and identified with labels describing contents.

1.1 Sprinkler Cabinets: Finished, wall-mounting, steel cabinet with hinged cover, with space for minimum of six spare sprinklers plus sprinkler wrench. Include number of sprinklers required by NFPA 13 and sprinkler wrench. Include separate cabinet with sprinklers and wrench for each type of sprinkler on Project.

PART 2 - PRODUCTS

SCHEDULE 1 - MANUFACTURERS

PRODUCT DATA SHEET 1 - In other Part 2 articles where titles below introduce lists, the following requirements apply to product selection:

2.1 Available Manufacturers: Subject to compliance with requirements, manufacturers offering products that may be incorporated into the Work include, but are not limited to, manufacturers specified.

SCHEDULE 2 - DUCTILE-IRON PIPE AND FITTINGS

PRODUCT DATA SHEET 1 - Mechanical-Joint, Ductile-Iron Pipe: AWWA C151, with mechanical-joint bell end and plain end.

2.1 Mechanical-Joint, Ductile-Iron Fittings: AWWA C110, ductile- or gray-iron standard pattern or AWWA C153, ductile-iron compact pattern.

2.2 Glands, Gaskets, and Bolts: AWWA C111, ductile- or gray-iron gland, rubber gasket, and steel bolts and nuts.

PRODUCT DATA SHEET 2 - Push-on-Joint, Ductile-Iron Pipe: AWWA C151, with push-on-joint bell end and plain end.

2.1 Push-on-Joint, Ductile-Iron Fittings: AWWA C110, ductile- or gray-iron standard pattern or AWWA C153, ductile-iron compact pattern.

2.2 Gaskets: AWWA C111, rubber.

PRODUCT DATA SHEET 3 - Grooved-End, Ductile-Iron Pipe: AWWA C151, with factory- or field-formed, radius-cut-grooved ends according to AWWA C606.

2.1 Grooved-Joint Piping Systems:

A. Manufacturers:

1. Anvil International, Inc.

2. Shurjoint Piping Products, Inc.

3. Victaulic Co. of America.

B. Grooved-End Fittings: ASTM A 536, ductile-iron casting with OD matching ductile-iron-pipe OD and cement lining.

C. Grooved-End-Pipe Couplings: AWWA C606, gasketed fitting matching ductile-iron-pipe OD. Include ductile-iron housing with keys matching ductile-iron-pipe and fitting grooves, prelubricated rubber gasket with center leg, and steel bolts and nuts.

D. Grooved-End-Pipe Transition Coupling: UL 213 and AWWA C606, gasketed fitting with end matching ductile-iron-pipe OD and end matching steel-pipe OD. Include ductile-iron housing with key matching ductile-iron-pipe groove and key matching steel-pipe groove, prelubricated rubber gasket listed for use with housing, and steel bolts and nuts.

E. Grooved-End Transition Flange: UL 213, gasketed fitting with key for ductile-iron-pipe dimensions. Include flange-type, ductile-iron housing with rubber gasket listed for use with housing and steel bolts and nuts.

SCHEDULE 3 - STEEL PIPE AND FITTINGS

PRODUCT DATA SHEET 1 - Threaded-End, Standard-Weight Steel Pipe: ASTM A 53/A 53M, ASTM A 135, or ASTM A 795, hot-dip galvanized with factory- or field-formed threaded ends.

2.1 Cast-Iron Threaded Flanges: ASME B16.1.

2.2 Malleable-Iron Threaded Fittings: ASME B16.3.

2.3 Gray-Iron Threaded Fittings: ASME B16.4.

2.4 Steel Threaded Pipe Nipples: ASTM A 733, made of ASTM A 53/A 53M or ASTM A 106, Schedule 40, seamless steel pipe hot-dip galvanized. Include ends matching joining method.

2.5 Steel Threaded Couplings: ASTM A 865 hot-dip galvanized-steel pipe.

PRODUCT DATA SHEET 2 - Grooved-End, Standard-Weight Steel Pipe: ASTM A 53/A 53M, ASTM A 135, or ASTM A 795, hot-dip galvanized where indicated and with factory- or field-formed, square-cut- or roll-grooved ends.

2.1 Grooved-Joint Piping Systems:

A. Manufacturers:

1. Anvil International, Inc.

2. Shurjoint Piping Products, Inc.

3. Victaulic Co. of America.

B. Grooved-End Fittings: UL-listed, ASTM A 536, ductile-iron casting with OD matching steel-pipe OD.

C. Grooved-End-Pipe Couplings: UL 213 and AWWA C606, rigid pattern, unless otherwise indicated; gasketed fitting matching steel-pipe OD. Include ductile-iron

housing with keys matching steel-pipe and fitting grooves, pre-lubricated rubber gasket listed for use with housing, and steel bolts and nuts.

SCHEDULE 4 - DIELECTRIC FITTINGS

PRODUCT DATA SHEET 1 - Dielectric Unions: Factory-fabricated assembly, designed for 250-psig (1725-kPa) minimum working pressure at 180 deg F (82 deg C). Include insulating material that isolates dissimilar materials and ends with inside threads according to ASME B1.20.1.

2.1 Manufacturers:

A. Capitol Manufacturing Co.

B. Epco Sales, Inc.

C. Hart Industries International, Inc.

D. Watts Industries, Inc.; Water Products Div.

E. Zurn Industries, Inc.; Wilkins Div.

PRODUCT DATA SHEET 2 - Dielectric Flanges: Factory-fabricated companion-flange assembly, for 175-psig (1200-kPa) minimum working-pressure rating as required for piping system.

2.1 Manufacturers:

A. Capitol Manufacturing Co.

B. Epco Sales, Inc.

C. Watts Industries, Inc.; Water Products Div.

PRODUCT DATA SHEET 3 - Dielectric Flange Insulation Kits: Components for field assembly shall include CR or phenolic gasket, PE or phenolic bolt sleeves, phenolic washers, and steel backing washers.

2.1 Manufacturers:

A. Advance Products and Systems, Inc.

B. Calpico, Inc.

C. Pipeline Seal and Insulator, Inc.

PRODUCT DATA SHEET 4 - Dielectric Couplings: Galvanized steel with inert and noncorrosive thermoplastic lining and threaded ends and 300-psig (2070-kPa) working-pressure rating at 225 deg F (107 deg C).

2.1 Manufacturers:

A. Calpico, Inc.

B. Lochinvar Corp.

PRODUCT DATA SHEET 5 - Dielectric Nipples: Electroplated steel with inert and noncorrosive thermoplastic lining, with combination of plain, threaded, or grooved ends and 300-psig (2070-kPa) working-pressure rating at 225 deg F (107 deg C).

2.1 Manufacturers:

A. Perfection Corporation.

B. Precision Plumbing Products, Inc.

C. Victaulic Co. of America.

SCHEDULE 5 - FLEXIBLE CONNECTORS

PRODUCT DATA SHEET 1 - Flexible connectors shall have materials suitable for system fluid. Include 175-psig (1200-kPa) minimum working-pressure rating and ends according to the following:

2.1 NPS 2 (DN 50) and Smaller: Threaded.

2.2 NPS 2-1/2 (DN 65) and Larger: Flanged.

2.3 Option for NPS 2-1/2 (DN 65) and Larger: Grooved for use with grooved-end-pipe couplings.

PRODUCT DATA SHEET 2 - Manufacturers:

2.1 Anamet Inc.

2.2 Flex-Hose Co., Inc.

2.3 Flexicraft Industries.

2.4 Flex-Pression, Ltd.

2.5 Flex-Weld, Inc.

2.6 Hyspan Precision Products, Inc.

2.7 Mercer Rubber Co.

2.8 Metraflex, Inc.

2.9 Proco Products, Inc.

2.10 Unaflex Inc.

PRODUCT DATA SHEET 3 - Bronze-Hose, Flexible Connectors: Corrugated, bronze, inner tubing covered with bronze wire braid. Include copper-tube ends or bronze flanged ends, braze welded to hose.

PRODUCT DATA SHEET 4 - Stainless-Steel-Hose/Steel Pipe, Flexible Connectors: Corrugated, stainless-steel, inner tubing covered with stainless-steel wire braid. Include steel nipples or flanges, welded to hose.

PRODUCT DATA SHEET 5 - Stainless-Steel-Hose/Stainless-Steel Pipe, Flexible Connectors: Corrugated, stainless-steel, inner tubing covered with stainless-steel wire braid. Include stainless-steel nipples or flanges, welded to hose.

SCHEDULE 6 - CORROSION-PROTECTIVE ENCASEMENT FOR PIPING

PRODUCT DATA SHEET 1 - Encasement for Underground Metal Piping: ASTM A 674 or AWWA C105, PE film, 0.008-inch (0.20-mm) minimum thickness, tube or sheet.

SCHEDULE 7 - SPRINKLER SPECIALTY FITTINGS

PRODUCT DATA SHEET 1 - Sprinkler specialty fittings shall be UL listed or FMG approved, with 175-psig (1200-kPa) minimum working-pressure rating, and made of materials compatible with piping. Sprinkler specialty fittings shall have 250-psig (1725-kPa) minimum working-pressure rating if fittings are components of high-pressure piping system.

PRODUCT DATA SHEET 2 - Outlet Specialty Fittings:

2.1 Manufacturers:

A. Anvil International, Inc.

B. Central Sprinkler Corp.

C. Ductilic, Inc.

D. JDH Pacific, Inc.

E. National Fittings, Inc.

F. Shurjoint Piping Products, Inc.

G. Southwestern Pipe, Inc.

H. Star Pipe Products; Star Fittings Div.

I. Victaulic Co. of America.

J. Ward Manufacturing.

2.2 Mechanical-T and -Cross Fittings: UL 213, ductile-iron housing with gaskets, bolts and nuts, and threaded, locking-lug, or grooved outlets.

2.3 Snap-On and Strapless Outlet Fittings: UL 213, ductile-iron housing or casting with gasket and threaded outlet.

PRODUCT DATA SHEET 3 - Sprinkler Drain and Alarm Test Fittings: Cast- or ductile-iron body; with threaded or locking-lug inlet and outlet, test valve, and orifice and sight glass.

2.1 Manufacturers:

A. Central Sprinkler Corp.

B. Fire-End and Croker Corp.

C. Viking Corp.

D. Victaulic Co. of America.

PRODUCT DATA SHEET 4 - Sprinkler Branch-Line Test Fittings: Brass body with threaded inlet, capped drain outlet, and threaded outlet for sprinkler.

2.1 Manufacturers:

A. Elkhart Brass Mfg. Co., Inc.

B. Fire-End and Croker Corp.

C. Potter-Roemer; Fire-Protection Div.

PRODUCT DATA SHEET 5 - Sprinkler Inspector's Test Fitting: Cast- or ductile-iron housing with threaded inlet and drain outlet and sight glass.

2.1 Manufacturers:

A. AGF Manufacturing Co.

B. Central Sprinkler Corp.

C. G/J Innovations, Inc.

D. Triple R Specialty of Ajax, Inc.

PRODUCT DATA SHEET 6 - Drop-Nipple Fittings: UL 1474, adjustable with threaded inlet and outlet, and seals.

2.1 Manufacturers:

A. CECA, LLC.

B. Merit.

SCHEDULE 8 - LISTED FIRE-PROTECTION VALVES

PRODUCT DATA SHEET 1 - Valves shall be UL listed or FMG approved, with 175-psig (1200 kPa) minimum pressure rating. Valves shall have 250-psig (1725-kPa) minimum pressure rating if valves are components of high-pressure piping system.

PRODUCT DATA SHEET 2 - Gate Valves with Wall Indicator Posts:

2.1 Gate Valves: UL 262, cast-iron body, bronze mounted, with solid disc, nonrising stem, operating nut, and flanged ends.

2.2 Indicator Posts: UL 789, horizontal-wall type, cast-iron body, with operating wrench or wheel, extension rod, locking device, and cast-iron barrel.

2.3 Manufacturers:

A. Grinnell Fire Protection.

B. McWane, Inc.; Kennedy Valve Div.

C. NIBCO.

D. Stockham.

PRODUCT DATA SHEET 3 - Ball Valves: Comply with UL 1091, except with ball instead of disc.

2.1 NPS 1-1/2 (DN 40) and Smaller: Bronze body with threaded ends.

2.2 NPS 2 and NPS 2-1/2 (DN 50 and DN 65): Bronze body with threaded ends or ductile-iron body with grooved ends.

2.3 NPS 3 (DN 80): Ductile-iron body with grooved ends.

2.4 Manufacturers:

A. NIBCO.

B. Victaulic Co. of America.

PRODUCT DATA SHEET 4 - Butterfly Valves: UL 1091.

2.1 NPS 2 (DN 50) and Smaller: Bronze body with threaded ends.

A. Coordinate first subparagraph and list below with Part 2 "Manufacturers" Article. Retain "Available" for nonproprietary and delete for semiproprietary specifications.

B. Manufacturers:

1. Global Safety Products, Inc.

2. Milwaukee Valve Company.

2.2 NPS 2-1/2 (DN 65) and Larger: Bronze, cast-iron, or ductile-iron body; wafer type or with flanged or grooved ends.

A. Manufacturers:

1. Central Sprinkler Corp.

2. Global Safety Products, Inc.
3. McWane, Inc.; Kennedy Valve Div.
4. Mueller Company.
5. NIBCO.
6. Pratt, Henry Company.
7. Victaulic Co. of America.

PRODUCT DATA SHEET 5 - Check Valves NPS 2 (DN 50) and Larger: UL 312, swing type, cast-iron body with flanged or grooved ends.

2.1 Manufacturers:

A. AFAC Inc.
B. American Cast Iron Pipe Co.; Waterous Co.
C. Central Sprinkler Corp.
D. Clow Valve Co.
E. Crane Co.; Crane Valve Group; Crane Valves.
F. Crane Co.; Crane Valve Group; Jenkins Valves.
G. Firematic Sprinkler Devices, Inc.
H. Globe Fire Sprinkler Corporation.
I. Grinnell Fire Protection.
J. Hammond Valve.
K. Matco-Norca, Inc.
L. McWane, Inc.; Kennedy Valve Div.
M. Mueller Company.
N. NIBCO.
O. Potter-Roemer; Fire Protection Div.
P. Reliable Automatic Sprinkler Co., Inc.
Q. Star Sprinkler Inc.
R. Stockham.
S. United Brass Works, Inc.
T. Venus Fire Protection, Ltd.
U. Victaulic Co. of America.
V. Watts Industries, Inc.; Water Products Div.

PRODUCT DATA SHEET 6 - Gate Valves: UL 262, OS&Y type.

2.1 NPS 2 (DN 50) and Smaller: Bronze body with threaded ends.

A. Manufacturers:

1. Crane Co.; Crane Valve Group; Crane Valves.
2. Hammond Valve.
3. NIBCO.
4. United Brass Works, Inc.

2.2 NPS 2-1/2 (DN 65) and Larger: Cast-iron body with flanged ends.

A. Manufacturers:

1. Clow Valve Co.
2. Crane Co.; Crane Valve Group; Crane Valves.
3. Crane Co.; Crane Valve Group; Jenkins Valves.
4. Hammond Valve.
5. Milwaukee Valve Company.
6. Mueller Company.
7. NIBCO.
8. Red-White Valve Corp.
9. United Brass Works, Inc.

PRODUCT DATA SHEET 7 - Indicating Valves: UL 1091, with integral indicating device and ends matching connecting piping.

2.1 Indicator: Electrical, 115-V ac, prewired, single-circuit or supervisory switch Electrical, 115-V ac, prewired, 2-circuit, supervisory switch or visual.

2.2 NPS 2 (DN 50) and Smaller: Ball or butterfly valve with bronze body and threaded ends.

A. Manufacturers:

1. Milwaukee Valve Company.
2. NIBCO.
3. Victaulic Co. of America.

2.3 NPS 2-1/2 (DN 65) and Larger: Butterfly valve with cast- or ductile-iron body; wafer type or with flanged or grooved ends.

A. Manufacturers:

1. Central Sprinkler Corp.
2. Grinnell Fire Protection.
3. McWane, Inc.; Kennedy Valve Div.
4. Milwaukee Valve Company.
5. NIBCO.
6. Victaulic Co. of America.

SCHEDULE 9 - UNLISTED GENERAL-DUTY VALVES

PRODUCT DATA SHEET 1 - Ball Valves NPS 2 (DN 50) and Smaller: MSS SP-110, 2-piece copper-alloy body with chrome-plated brass ball, 600-psig (4140-kPa) minimum CWP rating, blowout-proof stem, and threaded ends.

PRODUCT DATA SHEET 2 - Check Valves NPS 2 (DN 50) and Smaller: MSS SP-80, Type 4, Class 125 minimum, swing type with bronze body, nonmetallic disc, and threaded ends.

PRODUCT DATA SHEET 3 - Gate Valves NPS 2 (DN 50) and Smaller: MSS SP-80, Type 2, Class 125 minimum, with bronze body, solid wedge, and threaded ends.

PRODUCT DATA SHEET 4 - Globe Valves NPS 2 (DN 50) and Smaller: MSS SP-80, Type 2, Class 125 minimum, with bronze body, nonmetallic disc, and threaded ends.

SCHEDULE 10 - SPECIALTY VALVES

PRODUCT DATA SHEET 1 - Sprinkler System Control Valves: UL listed or FMG approved, cast- or ductile-iron body with flanged or grooved ends, and 175-psig (1200-kPa) minimum pressure rating. Control valves shall have 250-psig (1725-kPa) minimum pressure rating if valves are components of high-pressure piping system.

2.1 Manufacturers:

A. AFAC Inc.

B. Central Sprinkler Corp.

C. Firematic Sprinkler Devices, Inc.

D. Globe Fire Sprinkler Corporation.

E. Grinnell Fire Protection.

F. Reliable Automatic Sprinkler Co., Inc.

G. Star Sprinkler Inc.

H. Venus Fire Protection, Ltd.

I. Victaulic Co. of America.

J. Viking Corp.

PRODUCT DATA SHEET 2 - Automatic Drain Valves: UL 1726, NPS 3/4 (DN 20), ball-check device with threaded ends.

2.1 Manufacturers:

A. AFAC Inc.

B. Grinnell Fire Protection.

SCHEDULE 11 - SPRINKLERS

PRODUCT DATA SHEET 1 - Sprinklers shall be UL listed or FMG approved, with 175-psig (1200-kPa) minimum pressure rating. Sprinklers shall have 250-psig (1725-kPa) minimum pressure rating if sprinklers are components of high-pressure piping system.

PRODUCT DATA SHEET 2 - Manufacturers:

2.1 AFAC Inc.

2.2 Central Sprinkler Corp.

2.3 Firematic Sprinkler Devices, Inc.

2.4 Globe Fire Sprinkler Corporation.

2.5 Grinnell Fire Protection.

2.6 Reliable Automatic Sprinkler Co., Inc.

2.7 Star Sprinkler Inc.

2.8 Venus Fire Protection, Ltd.

2.9 Victaulic Co. of America.

2.10 Viking Corp.

PRODUCT DATA SHEET 3 - Automatic Sprinklers: With heat-responsive element complying with the following:

2.1 UL 199, for nonresidential applications.

2.2 UL 1767, for early-suppression, fast-response applications.

PRODUCT DATA SHEET 4 - Sprinkler Types and Categories: Nominal 1/2-inch (12.7-mm) orifice for "Ordinary" temperature classification rating, unless otherwise indicated or required by application.

2.1 Open Sprinklers: UL 199, without heat-responsive element.

A. Add other orifice sizes and K factors to two subparagraphs below to suit Project.

B. Orifice: 1/2 inch (12.7 mm), with discharge coefficient K between 5.3 and 5.8.

C. Orifice: 17/32 inch (13.5 mm), with discharge coefficient K between 7.4 and 8.2.

PRODUCT DATA SHEET 5 - Sprinkler types, features, and options as follows:

2.1 Delete sprinkler types below not required.

2.2 Pendent sprinklers.

2.3 Pendent, dry-type sprinklers.

2.4 Flush ceiling sprinklers, including escutcheons.

2.5 Quick-response sprinklers.

2.6 Sidewall sprinklers.

2.7 Sidewall, dry-type sprinklers.

2.8 Upright sprinklers.

PRODUCT DATA SHEET 6 - Sprinkler Finishes: Chrome plated, bronze, and painted.

PRODUCT DATA SHEET 7 - Special Coatings: Wax, lead, and corrosion-resistant paint.

PRODUCT DATA SHEET 8 - Sprinkler Escutcheons: Materials, types, and finishes for the following sprinkler mounting applications. Escutcheons for concealed, flush, and recessed-type sprinklers are specified with sprinklers.

2.1 Ceiling Mounting: Chrome-plated steel, one piece, flat.

2.2 Sidewall Mounting: Chrome-plated steel, one piece, flat.

PRODUCT DATA SHEET 9 - Sprinkler Guards: Wire-cage type, including fastening device for attaching to sprinkler.

SCHEDULE 12 - MONITORS

PRODUCT DATA SHEET 1 - Manufacturers:

2.1 AFAC Inc.

2.2 Elkhart Brass Mfg. Co., Inc.

2.3 Fire-End and Croker Corp.

2.4 Guardian Fire Equipment Incorporated.

2.5 Potter-Roemer; Fire-Protection Div.

PRODUCT DATA SHEET 2 - Description: Stationary, single-waterway-type monitor for 750-gpm (47.3-L/s) water stream. Include the following features:

2.1 Waterway: NPS 2-1/2 (DN 65) minimum, brass or stainless-steel tube.

2.2 Operation: Lever handle.

2.3 Horizontal Rotation: 360 degrees with locking device.

2.4 Vertical Rotation: 80-degree elevation and 60-degree depression with locking device.

2.5 Nozzle: UL 401, NPS 2-1/2 (DN 65), brass, adjustable from fog spray to straight stream to shutoff.

SCHEDULE 13 - FIRE DEPARTMENT CONNECTION

PRODUCT DATA SHEET 1 - See Civil Plans and Specifications

SCHEDULE 14 - ALARM DEVICES

PRODUCT DATA SHEET 1 - Alarm-device types shall match piping and equipment connections.

PRODUCT DATA SHEET 2 - Electrically Operated Alarm: UL 464, with 10-inch- (250-mm-) diameter, vibrating-type, metal alarm bell with red-enamel factory finish and suitable for outdoor use.

PRODUCT DATA SHEET 3 - Manufacturers:

2.1 Potter Electric Signal Company.

2.2 System Sensor.

PRODUCT DATA SHEET 4 - Water-Flow Indicator: UL 346, electrical-supervision, paddle-operated-type, water-flow detector with 250-psig (1725-kPa) pressure rating and designed for horizontal or vertical installation. Include two single-pole, double-throw circuit switches for isolated alarm and auxiliary contacts, 7 A, 125-V ac and 0.25 A, 24-V dc; complete with factory-set, field-adjustable retard element to prevent false signals and tamperproof cover that sends signal if removed.

2.1 Manufacturers:

A. ADT Security Services, Inc.

B. Grinnell Fire Protection.

C. ITT McDonnell & Miller.

D. Potter Electric Signal Company.

E. System Sensor.

F. Viking Corp.

G. Watts Industries, Inc.; Water Products Div.

PRODUCT DATA SHEET 5 - Pressure Switch: UL 753, electrical-supervision-type, water-flow switch with retard feature. Include single-pole, double-throw, normally closed contacts and design that operates on rising pressure and signals water flow.

2.1 Manufacturers:

A. Grinnell Fire Protection.

B. Potter Electric Signal Company.

C. System Sensor.

D. Viking Corp.

PRODUCT DATA SHEET 6 - Valve Supervisory Switch: UL 753, electrical, single-pole, double-throw switch with normally closed contacts. Include design that signals controlled valve is in other than fully open position.

2.1 Manufacturers:

A. McWane, Inc.; Kennedy Valve Div.

B. Potter Electric Signal Company.

C. System Sensor.

PRODUCT DATA SHEET 7 - Indicator-Post Supervisory Switch: UL 753, electrical, single-pole, double-throw switch with normally closed contacts. Include design that signals controlled indicator-post valve is in other than fully open position.

2.1 Manufacturers:

A. Potter Electric Signal Company.

B. System Sensor.

SCHEDULE 15 - PRESSURE GAGES

PRODUCT DATA SHEET 1 - Manufacturers:

2.1 AGF Manufacturing Co.

2.2 AMETEK, Inc.; U.S. Gauge.

2.3 Brecco Corporation.

2.4 Dresser Equipment Group; Instrument Div.

2.5 Marsh Bellofram.

2.6 WIKA Instrument Corporation.

PRODUCT DATA SHEET 2 - Description: UL 393, 3-1/2- to 4-1/2-inch- (90- to 115-mm-) diameter, dial pressure gage with range of 0 to 250 psig (0 to 1725 kPa) minimum.

2.1 Water System Piping: Include caption "WATER" or "AIR/WATER" on dial face.

PART 3 - EXECUTION

SCHEDULE 1 - PREPARATION

PRODUCT DATA SHEET 1 - Perform fire-hydrant flow test according to NFPA 13 and NFPA 291. Use results for system design calculations required in Part 1 "Quality Assurance" Article.

PRODUCT DATA SHEET 2 - Report test results promptly and in writing.

SCHEDULE 2 - EARTHWORK

PRODUCT DATA SHEET 1 - Refer to Division 31 Section "Earthwork" for excavating, trenching, and backfilling.

SCHEDULE 3 - EXAMINATION

PRODUCT DATA SHEET 1 - Examine roughing-in for hose connections and stations to verify actual locations of piping connections before installation.

PRODUCT DATA SHEET 2 - Examine walls and partitions for suitable thicknesses, fire- and smoke-rated construction, framing for hose-station cabinets, and other conditions where hose connections and stations are to be installed.

PRODUCT DATA SHEET 3 - Proceed with installation only after unsatisfactory conditions have been corrected.

SCHEDULE 4 - PIPING APPLICATIONS, GENERAL

PRODUCT DATA SHEET 1 - Shop weld pipe joints where welded piping is indicated.

PRODUCT DATA SHEET 2 - Do not use welded joints for galvanized-steel pipe.

PRODUCT DATA SHEET 3 - Flanges, flanged fittings, unions, nipples, and transition and special fittings with finish and pressure ratings same as or higher than system's pressure rating may be used in aboveground applications, unless otherwise indicated.

PRODUCT DATA SHEET 4 - Piping between Fire Department Connections and Check Valves: See civil plans and specifications.

PRODUCT DATA SHEET 5 - Underground Service-Entrance Piping: See civil plans and specifications.

SCHEDULE 5 - SPRINKLER SYSTEM PIPING APPLICATIONS

PRODUCT DATA SHEET 1 - Standard-Pressure, Wet-Pipe Sprinkler System, 175-psig (1200-kPa) Maximum Working Pressure:

3.1 Sprinkler-Piping Fitting Option: Specialty sprinkler fittings, NPS 2 (DN 50) and smaller, including mechanical-T and -cross fittings, may be used downstream from sprinkler zone valves.

3.2 NPS 1-1/2 (DN 40) and Smaller: Threaded-end, black or galvanized, standard-weight steel pipe; cast- or malleable-iron threaded fittings; and threaded joints.

3.3 NPS 2 (DN 50): Threaded-end, black or galvanized, standard-weight steel pipe; cast- or malleable-iron threaded fittings; and threaded joints.

3.4 NPS 2 (DN 50): Grooved-end, black or galvanized, standard-weight steel pipe; grooved-end fittings; grooved-end-pipe couplings; and grooved joints.

3.5 NPS 2-1/2 to NPS 3-1/2 (DN 65 to DN 90): Threaded-end, black or galvanized, standard-weight steel pipe; cast- or malleable-iron threaded fittings; and threaded joints.

3.6 NPS 2-1/2 to NPS 3-1/2 (DN 65 to DN 90): Grooved-end, black or galvanized, standard-weight steel pipe; grooved-end fittings; grooved-end-pipe couplings; and grooved joints.

3.7 NPS 4 to NPS 6 (DN 100 to DN 150): Threaded-end, black or galvanized, standard-weight steel pipe; cast- or malleable-iron threaded fittings; and threaded joints.

SCHEDULE 6 - VALVE APPLICATIONS

PRODUCT DATA SHEET 1 - Drawings indicate valve types to be used. Where specific valve types are not indicated, the following requirements apply:

3.1 Listed Fire-Protection Valves: UL listed and FMG approved for applications where required by NFPA 13.

A. Shutoff Duty: Use ball, butterfly, or gate valves.

3.2 Unlisted General-Duty Valves: For applications where UL-listed and FMG-approved valves are not required by NFPA 13.

A. Shutoff Duty: Use ball, butterfly, or gate valves.

B. Throttling Duty: Use ball or globe valves.

SCHEDULE 7 - JOINT CONSTRUCTION

PRODUCT DATA SHEET 1 - Refer to Division 22 Section "Basic Materials and Methods" for basic piping joint construction.

PRODUCT DATA SHEET 2 - Threaded Joints: Comply with NFPA 13 for pipe thickness and threads. Do not thread pipe smaller than NPS 8 (DN 200) with wall thickness less than Schedule 40 unless approved by authorities having jurisdiction and threads are checked by a ring gage and comply with ASME B1.20.1.

PRODUCT DATA SHEET 3 - Twist-Locked Joints: Insert plain-end piping into locking-lug fitting and rotate retainer lug one-quarter turn.

PRODUCT DATA SHEET 4 - Grooved Joints: Assemble joints with listed coupling and gasket, lubricant, and bolts.

3.1 Ductile-Iron Pipe: Radius-cut-groove ends of piping. Use grooved-end fittings and grooved-end-pipe couplings.

3.2 Steel Pipe: Square-cut or roll-groove piping as indicated. Use grooved-end fittings and rigid, grooved-end-pipe couplings, unless otherwise indicated.

PRODUCT DATA SHEET 5 - Dissimilar-Metal Piping Joints: Construct joints using dielectric fittings compatible with both piping materials.

3.1 NPS 2 (DN 50) and Smaller: Use dielectric unions, couplings, or nipples.

3.2 NPS 2-1/2 to NPS 4 (DN 65 to DN 100): Use dielectric flanges.

3.3 NPS 5 (DN 125) and Larger: Use dielectric flange insulation kits.

SCHEDULE 8 - SERVICE-ENTRANCE PIPING

PRODUCT DATA SHEET 1 - Connect fire-suppression piping to water-service piping of size and in location indicated for service entrance to building. Refer to Division 33 Section "Water Distribution" for exterior piping.

PRODUCT DATA SHEET 2 - Install shutoff valve, check valve, pressure gage, and drain at connection to water service.

SCHEDULE 9 - PIPING INSTALLATION

PRODUCT DATA SHEET 1 - Refer to Division 22 Section "Basic Materials and Methods" for basic piping installation.

PRODUCT DATA SHEET 2 - Locations and Arrangements: Drawing plans, schematics, and diagrams indicate general location and arrangement of piping. Install piping as indicated, as far as practical.

3.1 Deviations from approved working plans for piping require written approval from authorities having jurisdiction. File written approval with Architect before deviating from approved working plans.

PRODUCT DATA SHEET 3 - Use approved fittings to make changes in direction, branch takeoffs from mains, and reductions in pipe sizes.

PRODUCT DATA SHEET 4 - Install unions adjacent to each valve in pipes NPS 2 (DN 50) and smaller. Unions are not required on flanged devices or in piping installations using grooved joints.

PRODUCT DATA SHEET 5 - Install flanges or flange adapters on valves, apparatus, and equipment having NPS 2-1/2 (DN 65) and larger connections.

PRODUCT DATA SHEET 6 - Install "Inspector's Test Connections" in sprinkler system piping, complete with shutoff valve, sized and located according to NFPA 13.

PRODUCT DATA SHEET 7 - Install sprinkler piping with drains for complete system drainage.

PRODUCT DATA SHEET 8 - Install drain valves on standpipes.

PRODUCT DATA SHEET 9 - Install ball drip valves to drain piping between fire department connections and check valves. Drain to floor drain or outside building.

PRODUCT DATA SHEET 10 - Install alarm devices in piping systems.

PRODUCT DATA SHEET 11 - Hangers and Supports: Comply with NFPA 13 for hanger materials.

3.1 Install sprinkler system piping according to NFPA 13.

PRODUCT DATA SHEET 12 - Earthquake Protection: Install piping according to NFPA 13 to protect from earthquake damage.

PRODUCT DATA SHEET 13 - Install pressure gages on riser or feed main, at each sprinkler test connection, and at top of each standpipe. Include pressure gages with connection not less than NPS 1/4 (DN 8) and with soft metal seated globe valve, arranged for draining pipe between gage and valve. Install gages to permit removal, and install where they will not be subject to freezing.

PRODUCT DATA SHEET 14 - Fill wet-pipe sprinkler system piping with water.

SCHEDULE 10 - VALVE INSTALLATION

PRODUCT DATA SHEET 1 - Install listed fire-protection valves, unlisted general-duty valves, specialty valves and trim, controls, and specialties according to NFPA 13 and authorities having jurisdiction.

PRODUCT DATA SHEET 2 - Install listed fire-protection shutoff valves supervised-open, located to control sources of water supply except from fire department connections. Install permanent identification signs indicating portion of system controlled by each valve.

SCHEDULE 11 - SPRINKLER APPLICATIONS

PRODUCT DATA SHEET 1 - Drawings indicate sprinkler types to be used. Where specific types are not indicated, use the following sprinkler types:

3.1 Rooms without Ceilings: Upright sprinklers.

3.2 Rooms with Suspended Ceilings: Flush ceiling sprinklers with escutcheons.

3.3 Wall Mounting: Sidewall sprinklers.

3.4 Sprinkler Finishes:

A. Upright, Pendent, and Sidewall Sprinklers: Chrome plated in finished spaces exposed to view; rough bronze in unfinished spaces not exposed to view; wax coated where exposed to acids, chemicals, or other corrosive fumes.

SCHEDULE 12 - MONITOR INSTALLATION

PRODUCT DATA SHEET 1 - Install monitor bases securely attached to building substrate.

SCHEDULE 13 - CONNECTIONS

PRODUCT DATA SHEET 1 - Install piping adjacent to equipment to allow service and maintenance.

PRODUCT DATA SHEET 2 - Connect water-supply piping to fire-suppression piping. Refer to Division 22 Section "Plumbing Specialties" for backflow preventers.

PRODUCT DATA SHEET 3 - Install ball drip valves at each check valve for fire department connection. See civil plans.

PRODUCT DATA SHEET 4 - Connect piping to specialty valves, hose valves, specialties, fire department connections, and accessories.

PRODUCT DATA SHEET 5 - Electrical Connections: Power wiring is specified in Division 26.

PRODUCT DATA SHEET 6 - Connect alarm devices to fire alarm.

PRODUCT DATA SHEET 7 - Ground equipment according to Division 26 Section "Grounding and Bonding."

PRODUCT DATA SHEET 8 - Connect wiring according to Division 26 Section "Conductors and Cables."

PRODUCT DATA SHEET 9 - Tighten electrical connectors and terminals according to manufacturer's published torque-tightening values. If manufacturer's torque values are not indicated, use those specified in UL 486A and UL 486B.

SCHEDULE 14 - LABELING AND IDENTIFICATION

PRODUCT DATA SHEET 1 - Install labeling and pipe markers on equipment and piping according to requirements in NFPA 13 and in Division 23 Section "Mechanical Identification."

SCHEDULE 15 - FIELD QUALITY CONTROL

PRODUCT DATA SHEET 1 - Perform the following field tests and inspections and prepare test reports:

3.1 Leak Test: After installation, charge system and test for leaks. Repair leaks and retest until no leaks exist.

3.2 Test and adjust controls and safeties. Replace damaged and malfunctioning controls and equipment.

3.3 Energize circuits to electrical equipment and devices.

3.4 Flush, test, and inspect sprinkler systems according to NFPA 13, "Systems Acceptance" Chapter.

3.5 Coordinate with fire alarm tests. Operate as required.

3.6 Verify that equipment hose threads are same as local fire department equipment.

PRODUCT DATA SHEET 2 - Report test results promptly and in writing to Architect and authorities having jurisdiction.

SCHEDULE 16 - CLEANING AND PROTECTION

PRODUCT DATA SHEET 1 - Clean dirt and debris from sprinklers.

PRODUCT DATA SHEET 2 - Remove and replace sprinklers with paint other than factory finish.

PRODUCT DATA SHEET 3 - Protect sprinklers from damage until Substantial Completion.

SCHEDULE 17 - DEMONSTRATION

PRODUCT DATA SHEET 1 - Engage a factory-authorized service representative to train Owner's maintenance personnel to adjust, operate, and maintain specialty valves. Refer to Division 1 Section "Closeout Procedures or Demonstration and Training."

END OF SECTION 21 13 13

SECTION 22 05 02 - BASIC PLUMBING REQUIREMENTS

PART 1 - GENERAL

SCHEDULE 1 - RELATED DOCUMENTS

PRODUCT DATA SHEET 0 - Drawings and general provisions of the Contract, including General and Supplementary Conditions and Division 01 Specification Sections, apply to this Section.

PRODUCT DATA SHEET 1 - Where contradictions occur between this Section and Division 01, the most stringent of the two shall apply. Architect shall decide which is most stringent.

PRODUCT DATA SHEET 2 - These Basic Requirements apply to the entire Division 22 work.

PRODUCT DATA SHEET 3 - All referenced and related provisions of Divisions 23 and 26 shall also apply to the work of this section as if fully repeated herein.

SCHEDULE 2 - SUMMARY

PRODUCT DATA SHEET 0 - The definitions of Division 01 and the General Conditions of the Specification also apply to the Division 22 contract.

PRODUCT DATA SHEET 1 - “Contract Documents” constitute the drawings, specifications, general conditions, project manuals, etc., prepared by engineer (or other design professional in association with Engineer) for contractor’s bid or contractor’s negotiations with the Owner. The Division 22 drawings and specifications prepared by the Engineer are not Construction Documents.

PRODUCT DATA SHEET 2 - “Construction Documents”, “construction drawings”, and similar terms for Division 22 work refer to installation diagrams, shop drawings and coordination drawings prepared by the contractor using the design intent indicated on the Engineer’s contract documents. These specifications detail the contractor’s responsibility for “Engineering by Contractor” and for preparation of construction documents.

PRODUCT DATA SHEET 3 - “(N)” indicates “new” equipment to be provided under this contract.

PRODUCT DATA SHEET 4 - “(E)” indicates “existing” equipment on site which may or may not need to be relocated as part of this work.

PRODUCT DATA SHEET 5 - “(R)” indicates existing equipment to be relocated as part of this work.

PRODUCT DATA SHEET 6 - “Furnish” means to “supply” and usually refers to an item of equipment.

PRODUCT DATA SHEET 7 - “Install” means to “set in place, connect and place in full operational order”.

PRODUCT DATA SHEET 8 - “Provide” means to “furnish and install”.

PRODUCT DATA SHEET 9 - “Equal” or “Equivalent” means “meets the specifications of the referenced product or item in all significant aspects”. Significant aspects shall be as determined by the Owner’s Representative.

PRODUCT DATA SHEET 10 -

PRODUCT DATA SHEET 11 - "Work by other(s) divisions", "re:_____ Division", and similar expressions means work to be performed under the contract documents, but not necessarily under the division or section of the work on which the note appears. It is the contractors' sole responsibility to coordinate the work of the contract between his/her suppliers, subcontractors and employees. If clarification is required, consult Owner's Representative before submitting bid.

PRODUCT DATA SHEET 12 - By inference, any reference to a "contractor" or "sub-contractor" means the entity, which has contracted with the Owner for the work of the Contract Documents.

PRODUCT DATA SHEET 13 - "Engineer" means the design professional firm, which has preferred these contract documents. All questions, submittals, etc. of this division shall be routed to the Engineer (through proper contractual channels).

SCHEDULE 3 - COORDINATION WITHIN DIVISION 22

PRODUCT DATA SHEET 1 - Contract Documents:

1.1 General: The Contract Documents are diagrammatic showing certain physical relationships, which must be established within Division 22 work and its interface with other work. Such establishment is the exclusive responsibility of the Contractor. Drawings shall not be scaled for the purpose of establishing dimensions, clearances or material quantities.

1.2 Supplemental Instructions: The exact location for some items in this Specification may not be shown on the Drawings. The location of such items may be established by the Owner's Representative during the progress of the work.

1.3 Discrepancies:

A. Examine Drawings and Specifications of all Divisions of the work.

B. Report any discrepancies to the Owner's Representative and obtain written instructions before proceeding.

C. Should there be a conflict within or between the Specifications or Drawings, the most stringent or higher quality requirements shall apply.

D. Items called for either in the Specifications or on the Drawings shall be required as if called for in both.

1.4 Constructability:

A. Examine Drawings and Specifications of all Divisions of the work.

B. Report any issues to the Owner's Representative which may prevent installation of Division 22 work in accordance with the Contract Documents and the original construction contract.

PRODUCT DATA SHEET 2 - Contractor shall be responsible for providing proper documentation of equipment product data and shop drawings to all entities providing service.

PRODUCT DATA SHEET 3 - Coordination Drawings: Prepare coordination drawings in accordance with Division 01, Section "Submittals" to scale of 1/4" = 1'-0" or larger, detailing major elements, components, and systems of mechanical equipment (i.e. equipment rooms, and exterior equipment areas) and materials in relationship with other system, installations, and building components. Indicate locations where space is limited for installation and access and where sequencing and coordination of installations are important to the efficient flow of the work, including (but not necessarily limited to) the following:

1.1 Indicate all major piping (HVAC, Plumbing and Fire Suppression), electrical equipment and conduits, structural, and architectural elements in these areas as well.

1.2 Sizes and locations of required concrete pads, piers, curbs, and bases.

1.3 Provide all necessary sections and elements for clarification.

1.4 Indicate all seismic restraint and support systems to be used for all mechanical equipment throughout the project.

1.5 Ductwork and piping transitions from rooftop units to shafts or horizontal ducts.

1.6 Failure to produce or submit coordination drawings does not dismiss the Contractor's responsibility for translating the design intent of the Contract Documents into Construction Drawings.

1.7 The coordination drawing shall include all trades with different colors representing different trades; and shall be signed off by all parties having work in the area. These drawings shall be submitted to the Owner's Representative for review and approval.

PRODUCT DATA SHEET 4 - CAD Drawings: For the purposes of facilitating the Contractor's shop drawings and record drawings, electronic AutoCAD drawings are available from M-E Engineers, Inc.

PRODUCT DATA SHEET 5 - Existing Conditions:

1.1 Before submitting proposals for this work, each Bidder shall be familiar with plans and specifications and shall have examined the premises and understood the conditions under which he/she will be obliged to operate in performing his/her contract.

1.2 No allowance will be made subsequently in this connection, on behalf of the Contractor, for any error through negligence on his/her part.

1.3 Drawings of existing conditions may be available. Contractor is strongly encouraged to obtain relevant drawings to assist in his/her performance of the contract.

1.4 Deferred Approval Items: Division 01.

1.5 Utility Connections:

1.6 Coordinate the connection of plumbing system with utilities and services.

1.7 Comply with regulations of utility suppliers.

1.8 The contract documents indicate the available information on existing utilities and services, and on new services (if any) to be provided to the project by utility companies and agencies.

1.9 Notify the Owner's Representative immediately if discrepancies are found.

1.10 Coordinate mechanical utility interruptions one week in advance in writing with the Owner's Representative and the Utility Company.

A. Plan work so that duration of the interruption is kept to a minimum.

SCHEDULE 4 - COORDINATION WITH OTHER DIVISIONS

PRODUCT DATA SHEET 0 - General:

1.1 Coordinate the Division 22 work with the progress of the work of the other trades.

1.2 Complete the entire installation as soon as the condition of the building will permit.

1.3 Contractor is responsible for coordination of his/her work with Owner's facility staff engaged in building automation, commissioning of systems, fire alarm system, etc.

PRODUCT DATA SHEET 1 - Coordination with electrical work: Refer to Section 260502, BASIC ELECTRICAL REQUIREMENTS.

PRODUCT DATA SHEET 2 - Cutting and Patching: Refer to Section 220503, BASIC PLUMBING MATERIALS AND METHODS.

PRODUCT DATA SHEET 3 - Chases, Inserts and Openings:

1.1 Provide measurements, drawings, and layouts so that opening, inserts and chases in new construction can be built and coordinated as construction progresses.

1.2 Check sizes and locations of openings provided.

1.3 Any cutting and patching made necessary by failure to provide measurements, drawings, and layouts at the proper time shall be done at no additional cost to the Owner.

PRODUCT DATA SHEET 4 - Support Dimensions: Provide dimensions and drawings so that concrete bases and other equipment supports to be provided under other Sections of the Specifications can be built at the proper time.

PRODUCT DATA SHEET 5 - Deferred Approved Items: Division 01.

SCHEDULE 5 - COORDINATION WITH EXISTING OCCUPIED AREAS

PRODUCT DATA SHEET 1 - Minimize disruptions to operation of existing plumbing systems in occupied areas.

PRODUCT DATA SHEET 2 - Coordinate any required disruptions with the Owner's Representative, one week in advance, in writing.

PRODUCT DATA SHEET 3 - Provide temporary connections to prevent long disruptions.

SCHEDULE 6 - WORK IN EXISTING AREA

PRODUCT DATA SHEET 1 - Remove existing equipment and materials as required.

PRODUCT DATA SHEET 2 - Verify the size and location of all existing services and utility lines prior to connection. The drawings show diagrammatically the approximate location of utilities where information is available, but the drawings are not exact as to quantity, extent or location. Exercise extreme caution during all phases of the work to locate, identify and protect existing services and utilities. Record the location of, and repair damage as required to existing services and utilities which are encountered as a result of work under this contract.

PRODUCT DATA SHEET 3 - Make all necessary alterations and additions to connect the existing with the new work so that when the work is complete, it will be in satisfactory operable condition. Provide all cutting and patching including concrete saw cutting and core drilling as required. Obtain approval from the structural engineer prior to performing concrete saw cutting or core drilling operations.

PRODUCT DATA SHEET 4 - All equipment and materials removed shall be legally disposed of off-site, unless otherwise noted.

SCHEDULE 7 - ENGINEERING BY CONTRACTOR

PRODUCT DATA SHEET 1 - The construction of this building requires the Contractor to design several systems or subsystems. All such designs shall be the complete responsibility of the Contractor.

PRODUCT DATA SHEET 2 - Systems or subsystems which require responsibility by the Contractor and submitted to the Engineer for review include, but are not limited to:

1.1 Equipment and piping supports, not detailed in the drawings.

1.2 Pipe hangers and anchors not specified in these documents, or catalogued by the manufacturer.

1.3 Vibration Isolation/Seismic Restraint.

1.4 Underground piping distribution systems.

SCHEDULE 8 - REGULATORY REQUIREMENTS

PRODUCT DATA SHEET 1 - General:

1.1 Regulatory Compliance: Work performed under this Division shall comply with the latest currently adopted editions of Codes and Regulations including, but not limited to those listed below.

1.2 Minimum Requirements: The requirements of the Drawings and Specifications are the minimum that will be allowed, unless such requirements are exceeded by applicable codes or Regulations, in which case the Code or Regulation requirement shall govern.

1.3 Code Changes: Should a code change occur between time of proposal and date of permit issue, and the Contractor has unnecessarily delayed the acquisition of permits, the contractor shall hold the Owner free from additional expense resulting from such Code change.

PRODUCT DATA SHEET 2 - Codes: Comply With the Currently Adopted (At Time of Contract Award) Following Codes:

1.1 City of San Diego Municipal Code, Ordinances and Regulations.

1.2 City of San Diego Fire Department Regulations and Requirements.

1.3 California Codes of Regulations, (CCR), Title 24, Latest Edition.

1.4 California Building Code (CBC), Latest Edition.

1.5 California Mechanical Code (CMC), Latest Edition.

1.6 California Plumbing Code (CPC), Latest Edition.

1.7 California Electric Code (CEC), Latest Edition.

1.8 California Fire Code (CFC), Latest Edition.

1.9 San Diego County Department of Health Services Regulations and Requirements.

1.10 San Diego County Public Works Department Regulations and Requirements.

1.11 San Diego County Industrial Waste Division Regulations and Requirements.

1.12 San Diego County Fire Department Regulations and Requirements.

1.13 National Electric Code (NEC), Latest Edition.

1.14 California Energy Commission, Title 24.

1.15 National Fire Protection Association NFPA-101, Life Safety Code, Latest Edition for JCAHO accreditation.

1.16 California Occupational Safety and Health Administration Regulations and Requirements (CAL-OSHA).

1.17 San Diego County Air Pollution Control District Regulations and Requirements (SDCAPCD).

1.18 American Disability Act Regulations and Requirements (ADA).

1.19 State of California Water Resources Control

PRODUCT DATA SHEET 3 - Comply With the Latest Editions of Applicable Regulations and Standards, Including:

1.1 National Fire Protection Associations (NFPA).

1.2 Underwriter's Laboratories, Inc. (UL).

1.3 American National Standards Institute (ANSI).

1.4 American Society of Testing Materials (ASTM).

1.5 American Society of Mechanical Engineers (ASME).

1.6 American Welding Society Code (AWSC).

1.7 American Water Works Association (AWWA).

1.8 Compressed Gas Association (CGA).

1.9 Cast Iron Soil Pipe Institute (CISPI).

1.10 Manufacturers Standardization Society (MSS).

1.11 National Bureau of Standards (NBS).

1.12 Plumbing and Drainage Institute (PDI).

1.13 Sheet Metal and Air Conditioning Contractors National Association (SMACNA).

PRODUCT DATA SHEET 4 - Requirements of Local Utility Companies: Comply with rules and regulations of local utility companies. Include in bid the cost of all valves, valve boxes, meter boxes, meters and such accessory equipment, which will be required for the project.

PRODUCT DATA SHEET 5 - Additional Regulations: Follow additional regulations which appear in individual Sections of these Specifications.

1.1 Contradictions: Where codes are contradictory, follow the most stringent, unless otherwise indicated in Plans or Specifications. The Owner's Representative shall determine which is most stringent.

PRODUCT DATA SHEET 6 - Contract Documents Not in Compliance:

1.1 Where it is not noted that the Drawings and Specifications do not comply with the minimum requirements of the codes, either notify the Owner's Representative in writing during the Bidding Period of the revisions required to meet Code Requirements. After entering into contract, Contractor will be held to complete all work necessary to meet Code Requirements without additional expense to the Owner.

1.2 Follow Drawings and Specifications where they are superior to Code Requirements.

PRODUCT DATA SHEET 7 - Permits:

1.1 Contractor shall pay for and obtain all permits required by authorities and agencies having jurisdiction for the work in this Division.

1.2 Post permits as required.

PRODUCT DATA SHEET 8 - Inspections and Tests:

1.1 Arrange for all required inspections and tests.

1.2 Pay all charges.

1.3 Notify the Owner's Representative in writing 72 hours before tests.

1.4 Submit one copy for Owners record of permits. Licenses, inspection reports and test reports.

SCHEDULE 9 - EQUIVALENTS AND SUBSTITUTIONS

PRODUCT DATA SHEET 0 - The applicable paragraphs for General Requirements, Division 01 apply herein.

PRODUCT DATA SHEET 1 - Basis for Design: The manufacturer's name and product listed on the drawings, or listed first of several names in these Specifications, is used as a basis for design to establish space requirements, a standard of quality and performance.

PRODUCT DATA SHEET 2 - Equivalents: Products of one or more other manufacturer's names listed in these Specifications following the words "or equivalent by" may be selected, subject to paragraph below titled "Contractor's Responsibility for Equivalent and Substitutions."

PRODUCT DATA SHEET 3 - Other Options:

1.1 For products specified by naming only one manufacturer, refer to paragraph below under "Substitutions".

1.2 For products specified only by performance characteristics or reference standards, select any manufacturer meeting the requirements.

PRODUCT DATA SHEET 4 - Substitutions: Requests for acceptance of a product of manufacturer's name not listed in these specifications will be considered if any one of the following conditions is met:

1.1 The named product is not available because of strikes or discontinuance of manufacture, and the proposed product is equivalent to the named product.

1.2 The proposed product is superior to the named product, in the opinion of the Owner's representative.

1.3 The proposed product is equivalent to the named product and its use will be to the advantage of the Owner, by the Owner receiving an equitable credit or cost savings. The Owner's Representative reserves the right to reject any substitution.

1.4 Submit proposed substitutions with bid along with alternate price, complete descriptive data and a comparison of the substitute manufacturer's product with specified product. Request for acceptance of a product of manufacturer's name not listed in these specifications, is subject to the paragraph titled "Contractor's Responsibility Equivalents and Substitutions".

PRODUCT DATA SHEET 5 - Contractor's Responsibility for Equivalents and Substitutions:

1.1 Items submitted as a substitution to the basis of design or listed general equivalents shall be identified as such and shall include a written request for substitution indicating the following:

A. Contract price adjustment.

B. Contract time adjustment.

C. Item by item breakdown of differences between basis of design and substituted item.

D. Operation, maintenance and energy cost difference.

1.2 Products of manufacturer must match the features, construction, performance and size of those selected for design. Standard catalogued may require certain modifications to meet specified requirements.

1.3 The responsibility for providing that specified requirements have been met remains with the manufacturer and contractor. Should the substituted item fail to perform in accordance with the Specifications, replace same with the originally specified item without extra cost to the contract.

1.4 When requesting review of an equivalent or substituted product, submit a comparison chart listing features, construction, performance and sizes of named product versus equivalent or substituted product.

1.5 Submittals for review of an equivalent or substituted product will be reviewed for acceptability when all the above requirements have been met. Contractor shall be responsible for all costs incurred by the Architect and Engineer for review of equivalency beyond initial review.

1.6 Coordinate the installation of the product with all trades.

1.7 Contractor shall be responsible for changes in electric wiring, materials and for all other additional costs of construction by all trades involved to accommodate the product to perform same as product used on the "Basis of Design".

1.8 Coordination of General Equivalents and Substitutions: Where Contract Documents permit selection from general equivalents, or where substitutions are authorized, coordinate clearance and other interface requirements with mechanical and other work.

1.9 Provide necessary additional items so that selected or substituted item operates equivalent to the Basis of Design and properly fits in the available space allocated for the Basis of Design.

1.10 Contractor is responsible for assuring that piping, conduit, duct, flue and other service locations for general equivalents or substitutions do not cause access, service or operational difficulties any greater than would be encountered with the Basis of Design.

1.11 Failure to comply with these requirements will result in immediate rejection of the request for substitution.

SCHEDULE 10 - GENERAL SUBMITTAL REQUIREMENTS

PRODUCT DATA SHEET 1 - Refer to Division 01.

PRODUCT DATA SHEET 2 - Coordination and Sequencing:

1.1 Coordinate submittals 3 weeks (minimum) prior to expected order date so that work will not be delayed by submittals.

1.2 Do not submit product data, or allow its use on the project until compliance, with requirement of Contract Documents has been confirmed by Contractor.

1.3 Submittal is for information and record, unless otherwise indicated, and is not a change order request.

1.4 Submitting contractor is responsible for routing reviewed submittals to all parties affected including but not limited to electrical, building automation and temperature control, and test and balance subcontractors.

1.5 Make submittals for group of similar products or materials such as valves, fixtures, pumps, insulation, etc., or area of work complete and at one time, not in piecemeal fashion.

1.6 Identify submittals with Architect's project name and number, with item designation as indicated on drawings, and referenced to applicable paragraphs of the specifications. Submit in brochure form.

1.7 Submittals of products needed at start of Project for its installation, or those requiring a long lead time for assembly or manufacturing, should be submitted before the others.

PRODUCT DATA SHEET 3 - Preparations of Submittals:

1.1 Refer to Division 01 requirements.

1.2 Provide permanent marking on each submittal to identify project, date, Contractor, Subcontractor, Supplier, submittal name and similar information to distinguish it from other submittals.

1.3 Indicate any portions of work, which deviate from the Contract Documents.

A. Explain the reasons for the deviations.

B. Show how such deviations coordinate with interfacing portions of other work.

1.4 Show Contractor's executed review and approval marking.

1.5 Provide space for the Owner's Representative "Action" marking.

1.6 Submittals, which are received from sources other than through Contractor's office, will be returned "Without Action".

1.7 Submittals shall be presented in a neat and legible fashion and shall be returned "Without Action" if presented in any other fashion.

PRODUCT DATA SHEET 4 - Quantities: Unless otherwise indicated in Division 01, submit six (6) copies.

1.1 Refer to Division 01 requirements.

1.2 Multiple System Items: Where a required submittal relates to an operational item of equipment used in more than one system, increase the number of final copies as necessary to complete the Maintenance Manuals for each system.

1.3 General Distribution:

A. Provide additional distribution of submittals (not included in foregoing copy submittal requirements) to Subcontractors, Suppliers, Fabricators, Installers, Governing Authorities and others as necessary for proper performance of the work.

B. Include such additional copies in transmittal to Owner's Representative where required to receive "Action" marking before final distribution.

1. Show such distributions on transmittal forms.

PRODUCT DATA SHEET 5 - Response to Submittals: Where standard product data have been submitted, it is recognized:

1.1 That the Submitter has determined that the products fulfill the specified requirements.

1.2 That the submittal is for the Owner's Representative information only, but will be returned with appropriate action where observed to be not in compliance with the requirements.

PRODUCT DATA SHEET 6 - If more than two submittals (either for shop drawings, as-builts drawings, or test and balance reports) are made by the contractor due to the incompletion, non-compliance, errors, omissions, etc. the Owner reserves the right to charge the contractor for subsequent reviews by their consultants. Such extra fees shall be deducted from payments by the Owner to the Contractor.

SCHEDULE 11 - SPECIFIC CATEGORY SUBMITTAL REQUIREMENTS

PRODUCT DATA SHEET 1 - Manufacturer's Data:

1.1 Where pre-printed data covers more than one distinct product, size, type, material, trim, accessory group or other variation, mark submitted copy with black ink to indicate which of the variations is to be provided.

1.2 Delete or mark-put significant portions of pre-printed data, which are not applicable.

1.3 Where operating ranges are shown, mark data to show portion of range required for project application.

1.4 For Each Product, Include the Following:

A. Sizes.

B. Weights.

C. Speeds.

D. Capacities.

E. Piping and electrical connection sizes and locations.

F. Statements of compliance with the required standards and regulations.

G. Performance data.

H. Manufacturer's specifications and installation instructions.

PRODUCT DATA SHEET 2 - Shop Drawings:

1.1 Prepare plumbing shop drawings, except diagrams, to accurate scale.

A. Show clearance dimensions at critical locations.

B. Show dimensions of spaces required for operation and maintenance.

C. Show interfaces with other, work, including structural support.

PRODUCT DATA SHEET 3 - Test Reports:

1.1 Submit test reports, which have been signed and dated by the firm performing the test.

1.2 Prepare test reports in the manner specified in the standard or regulation governing the test procedure (if any) as indicated.

PRODUCT DATA SHEET 4 - Required Equipment and Shop Drawing Submittals:

1.1 Provide a submittal schedule with bid.

1.2 Provide equipment submittals for each item of equipment specified or scheduled in the Contract Documents.

1.3 Submittal schedule shall show each item of equipment, applicable section of the Specifications where it is described, applicable drawing number and schedule name where it is scheduled, date of Contractor's proposed submittal to the Owner's Representative, required date to receive submittal from the Owner's Representative and schedule order date.

1.4 Provide a Mechanical Shop Drawing Schedule for submission to the Owner's Representative with the Submittal Schedule. Refer to Paragraph 1.03 – Coordination Within Division 22 – above.

SCHEDULE 12 - COMPATIBILITY

PRODUCT DATA SHEET 0 - General: Provide products, which are compatible with other products of the mechanical work, and with other work, requiring interface with the mechanical work.

PRODUCT DATA SHEET 1 - Power Characteristics: Where power characteristics are not stated in Division 22 Sections, refer to the Sections of Division 26 and the Electrical Drawings for the power characteristics of each power driven item of mechanical equipment. Coordinate available power with Electrical Contractor before ordering equipment. Mechanical Contractor shall be responsible for ordering equipment to meet the available power characteristics. If there is a conflict between Division 22 documents and Division 26 documents, provide a written notification to the Owner's Representative for direction. Do not order equipment prior to determining the proper electrical service. No contract cost adjustment will be allowed for equipment ordered in conflict with the available power characteristics.

SCHEDULE 13 - RECORD DRAWINGS

PRODUCT DATA SHEET 0 - Drawings:

1.1 Record of Project Progress: Purchase from the Architect a complete set of reproducible contract drawings and maintain drawings available at the job site for inspection. Keep an accurate, legible and continuously updated record of installed locations and all project revisions other than revised drawings issued by the Architect, including source and date of authorization. Utilize only contract drawing symbols for recording the work. Drawing notations to be sufficiently clear in the representation of the work, for utilization by a CADD operator (drafts person) who is not necessarily familiar with the installed work.

1.2 Record of Installation: At the conclusion of the work, deliver one (1) set of blue prints of the progress drawings to the Owner's Representative for review. Following the review, Contractor shall have incorporated by a competent CADD operator all of the installed data represented on the project progress drawings.

1.3 Include in Record Drawings the Following:

A. Revisions, including sketches, bulletins, change orders, written addenda and directives, clarifications and responses generated by requests for information (RFIs), regardless of source of the revision.

B. Location and configuration of equipment with related housekeeping pads.

C. Location of fixtures, drains and appurtenances.

D. Physical routing of piping, underground, exposed, and above ceiling with locations of valves and accessories plainly marked and identified.

E. Location of piping below building and on exterior, valves, manholes, appurtenances and stub outs dimensioned from buildings and permanent structures, both horizontally and vertically.

F. Location of wall and ceiling access panels.

PRODUCT DATA SHEET 1 - Acceptance: As a condition for acceptance of the work, deliver two (2) sets of Auto CAD Latest Version CDs and one set of signed and dated reproducible drawings to the Owner's Representative and obtain a receipt.

SCHEDULE 14 - OPERATING AND MAINTENANCE DATA

PRODUCT DATA SHEET 0 - Refer to Division 01 requirements.

PRODUCT DATA SHEET 1 - Submission:

1.1 Submit three typed and bound copies of Operating and Maintenance (O&M) Manuals prior to scheduling systems demonstrations for the Owner's Representative, as specified in Division 01.

1.2 Bind each Maintenance Manual in one or more vinyl covered, 3-ring binders, with pockets for folded drawings.

A. Mark the spine of each binder with system identification and volume number.

PRODUCT DATA SHEET 2 - Required Contents:

1.1 Manuals shall have index with tab dividers for each major equipment section to facilitate locating information on a specific piece of equipment.

1.2 Identify data within each section with drawing code numbers as they appear on Drawings and Specifications. Include as a minimum the following data:

1.3 Alphabetical list of system components, with the name, address and 24 hour telephone number of the company responsible for servicing each item during the first year of operation. Include point of contact for company.

1.4 Operating instructions for complete system including:

A. Emergency procedures for fire and failure of major equipment.

B. Major start, operation and shut down procedures.

1.5 Maintenance Instructions for Each Piece of Equipment Including:

A. Equipment lists.

B. Proper lubricants and lubricating instructions for each piece of equipment.

C. Necessary cleaning, replacement and/or adjustment schedule.

D. Product data.

E. Installation instructions.

F. Parts list.

1.6 Marked or changed prints locating concealed parts and variations from the original system design (as-built drawings).

1.7 Valve schedule and associated piping schematics. See Section 220553, IDENTIFICATION FOR PLUMBING PIPING AND EQUIPMENT.

1.8 Copies of any extended equipment warranties which are greater than one year.

SCHEDULE 15 - WARRANTIES

PRODUCT DATA SHEET 1 - The warranty period is one year after Date of Acceptance.

1.1 During this period, provide labor and materials as required to repair or replace defects in the mechanical system at no additional cost to the Owner. Provide certificate with O&M Manual submittal, which guarantees same-day service response to Owners call for all such warranty service.

1.2 Provide certificate for such items of equipment, which have warranties in excess of one year. Insert copies in O&M Manuals.

1.3 Provide extended manufacturers warranties to cover one full year from date of acceptance if standard warranty starts any time prior to that date.

1.4 At time of bid, submit additional costs or extended warranties for principal equipment (e.g. domestic water pressure booster pump, vacuum pump, air compressor, etc.).

PRODUCT DATA SHEET 2 - Refer to Division 01 for additional requirements.

SCHEDULE 16 - SPARE PARTS, SPECIAL TOOLS

PRODUCT DATA SHEET 1 - Deliver spare parts to the Owner's Representative and obtain receipts at the time operating instructions are given to the Owner's personnel.

PRODUCT DATA SHEET 2 - Include the Following:

1.1 V-Belts: One complete set of each size.

1.2 Fuses: each type used for all equipment utilizing fuses. Quantity 10%, but not less than two.

1.3 Pilot Light Lamps: Each type used on the project. Quantity of 10%, but not less than two.

1.4 Special Tools: Furnish special tools required for assembly, adjustment, setting or maintenance of equipment if such tool is not readily available on the commercial tool market.

1.5 Maintenance Paint: Furnish one can of touch-up paint for each different factory finish, which is to be the final finished surface of the product.

1.6 Alternate Parts: Under the individual mechanical sections, there are listed spare parts to be furnished under a bid alternate. Should the alternate be accepted, such spare parts shall be similarly delivered to the Owner.

SCHEDULE 17 - SYSTEM ACCEPTANCE

PRODUCT DATA SHEET 0 - Acceptance shall be contingent upon completion of final review and correction of all deficiencies. Satisfactory completion of the operational tests, which shall demonstrate compliance with all performance criteria, and the requirements of the Contract Documents.

PRODUCT DATA SHEET 1 - Request a Final Review Prior to System Acceptance After Completion of the Following:

1.1 Installation of all systems required by Contract Documents.

1.2 Submission and acceptance of service manuals.

1.3 Identification.

1.4 Cleaning.

1.5 Satisfactory operation of all systems for a period of one week.

SCHEDULE 18 - MANDATORY GOVERNING PROVISION

PRODUCT DATA SHEET 0 - Omissions of words or phrases, such as “the Contractor shall”, in conformity with”, “shall be”, “as noted on the Drawings”, “according to the Drawings”, “an”, “the”, and ‘all” are intentional.

PRODUCT DATA SHEET 1 - Omitted words or phrases shall be supplied by inference.

SCHEDULE 19 - OWNER FURNISHED EQUIPMENT

PRODUCT DATA SHEET 0 - All equipment called out in the Specifications or shown on the Drawings as “Owner Furnished Equipment” shall be installed and connected under this contract. Provide rough-ins for all future connections indicated, unless otherwise specifically indicated on Drawings.

SCHEDULE 20 - TEMPORARY FACILITIES

PRODUCT DATA SHEET 0 - Light, heat, power, etc.

1.1 Contractor shall be responsible for providing temporary electricity, heat and other facilities as specified in Division 01.

1.2 Contractor shall be responsible for maintaining the equipment in an as-new condition. Equipment will not be turned over to the Owner until it is brought up to as-new condition.

SCHEDULE 21 - SAFETY PROVISIONS

PRODUCT DATA SHEET 0 - Equipment Nameplates: provide power-oriented plumbing equipment with a permanent nameplate attached by the manufacturer, indicating:

1.1 The manufacturer.

1.2 Product name.

1.3 Model number.

1.4 Serial number.

1.5 Speed.

1.6 Capacity.

1.7 Power characteristics.

1.8 Labels of testing, or inspecting agencies.

1.9 Other similar data.

PRODUCT DATA SHEET 1 - Where manufacturer affixed nameplate is not available, Contractor shall fabricate and attach nameplate.

PRODUCT DATA SHEET 2 - Guards:

1.1 Unless equivalent guards are provided integral with the equipment, enclose each belt drive (including sheaves) on both sides in a galvanized, one inch, mesh screen of No. 18 gauge steel wire or expanded metal, fastened to an approved, structural steel frame, securely fastened to the equipment or floor.

1.2 Provide tachometer holes at shaft centers. Unless equivalent guards are provided integral with the equipment, install a solid guard of No. 20 gauge galvanized steel over the coupling of each item of direct-driven equipment.

1.3 Sides are not required on these guards except to ensure rigidity.

PART 2 - PRODUCTS (Not Used)

PART 3 - EXECUTION

SCHEDULE 1 - INSTALLATION GENERAL REQUIREMENTS

PRODUCT DATA SHEET 0 - Furnish, apply, install, connect, erect, clean, and condition manufactured materials and equipment as recommended in manufacturer's printed directions (maintained on job site during installation).

PRODUCT DATA SHEET 1 - Provide all attachment devices and materials necessary to secure materials together or to other materials.

PRODUCT DATA SHEET 2 - Make allowance for ample and normal expansion and contraction for all building components and piping systems that are subject to such.

PRODUCT DATA SHEET 3 - Install materials only when conditions of temperature, moisture, humidity and conditions of adjacent building components are conductive to achieving the best installation results.

PRODUCT DATA SHEET 4 - Erect, install and secure components in a structurally sound and appropriate manner.

PRODUCT DATA SHEET 5 - Where necessary, temporarily brace, shore, or otherwise support members until final connections are installed.

PRODUCT DATA SHEET 6 - Leave all temporary bracing, shoring, or other structural supports in place as long as practical for safety and to maintain proper alignment.

PRODUCT DATA SHEET 7 - Handle materials in a manner to prevent scratching, abrading, distortion, chipping, breaking, or other disfigurement.

PRODUCT DATA SHEET 8 - Conduct work in a manner to avoid injury or damage to previously placed work.

PRODUCT DATA SHEET 9 - Any work so impaired or damaged shall be replaced at no expense to Owner.

PRODUCT DATA SHEET 10 - Fabricate and install materials true to line, plumb and level.

PRODUCT DATA SHEET 11 - Leave finished surfaces smooth and flat, free from wrinkles, wraps, scratches, dents and other imperfections.

PRODUCT DATA SHEET 12 - Furnish materials in longest practical lengths and largest practical sizes to avoid all unnecessary jointing.

PRODUCT DATA SHEET 13 - Make all joints secure, tightly fitted, and as inconspicuous as possible by the best, accepted practice in joinery and fabrication.

PRODUCT DATA SHEET 14 - Consult the Owner's Representative for mounting height or position of any unit not specifically indicated or located on Drawings or specified in Specifications.

PRODUCT DATA SHEET 15 - Job mixed multi-component materials used in the work shall be mixed in such regulated and properly sized batches that material can be used before it begins to "set".

PRODUCT DATA SHEET 16 - Mixing of a partially "set" batch with another batch of fresh materials will not be accepted and entire batch shall be discarded and removed from site.

PRODUCT DATA SHEET 17 - Clean all mixing tools and appliances that can be contaminated prior to mixing of fresh materials.

PRODUCT DATA SHEET 18 - In addition to the above, refer to each Section of the Specifications for additional installation requirements for the proper completion of all work.

SCHEDULE 2 - COORDINATION OF PLUMBING INSTALLATION

PRODUCT DATA SHEET 1 - Inspection and Preparation:

3.1 Examine the work interfacing with plumbing work, and the conditions under which the work will be preformed, and notify the Owner's Representative of conditions detrimental to the proper completion of the work at original contract price.

3.2 Do not proceed with the work until unsatisfactory conditions have been corrected.

PRODUCT DATA SHEET 2 - Layout:

3.1 Layout the plumbing work in conformity with the Contract Drawings, Coordination Drawings and other Shop Drawings, product data and similar requirements so that the entire plumbing system will perform as an integrated system, properly interfaced with other work recognizing that portions of the work are shown only in diagrammatic form.

3.2 Where coordination requirements conflict with individual system requirements, comply with the Owner's Representative decision on resolution of the conflict.

3.3 Take necessary field measurements to determine space and connection requirements.

3.4 Provide sizes and shapes of equipment so the final installation conforms to the intent of the Contract Documents.

PRODUCT DATA SHEET 3 - Provide necessary fittings to create offsets as required to coordinate with building structure and other trades, even if fittings are not shown on the Contract Drawings.

PRODUCT DATA SHEET 4 - Integrate plumbing work in ceiling spaces with the ceiling suspension system, light fixtures and other work, so that required performance of each will be achieved.

SCHEDULE 3 - PRODUCT INSTALLATION

PRODUCT DATA SHEET 1 - Manufacturer's instructions:

3.1 Except where more stringent requirements are indicated, comply with the product manufacturer's instructions and recommendations.

3.2 Consult with manufacturer's technical representatives, who are recognized as technical experts, for specific instructions on special projects conditions.

3.3 If conflict exists, notify the Owner's in writing and obtain his instruction before proceeding with the work in question.

PRODUCT DATA SHEET 2 - Movement of Equipment:

3.1 Wherever possible, arrange for the movement and positioning of equipment so that enclosing partitions, walls and roofs will not be delayed or need to be removed.

3.2 Otherwise, advise Contractor of opening requirements to be maintained for the subsequent entry of equipment.

PRODUCT DATA SHEET 3 - Heavy Equipment:

3.1 Coordinate the movement of heavy items with shoring and bracing so that the building structure will not be overloaded during the movement and installation.

3.2 Where plumbing products to be installed on the existing roof are too heavy to be hand-carried, do not transport across the existing roof deck. Position by crane or other device so as to avoid overloading or otherwise damaging the roof deck.

PRODUCT DATA SHEET 4 - Clearances:

3.1 Install Piping and Ductwork:

A. Straight and true.

B. Aligned with other work.

C. Close to walls and overhead structure (allowing for insulation).

D. Concealed, where possible, in occupied spaces.

E. Out-of-the-way with maximum passageway and headroom remaining in each space.

3.2 Do not obstruct windows, doors and other openings.

3.3 Coordinate location of piping systems required to slope for drainage (over other service lines and ductwork).

PRODUCT DATA SHEET 5 - Access:

3.1 Provide For Removal, Without Damage To Other Parts, Of:

A. Seals.

B. Shafts.

C. Gaskets.

D. Drives.

E. Filters.

F. Strainers.

G. Bearings.

H. Control components.

I. Other parts requiring periodic replacement or maintenance.

3.2 Connect equipment for ease of disconnecting with minimum of interference with other work.

3.3 Provide unions where required.

3.4 Locate operating and control equipment and devices for easy access.

3.5 Provide access panels where equipment or devices are concealed by non-accessible finishes and similar work. See Section 220503, BASIC PLUMBING MATERIALS AND METHODS.

3.6 Ensure grease fittings for equipment are readily visible and accessible. Extend fittings when necessary.

SCHEDULE 4 - PROTECTION OF WORK

PRODUCT DATA SHEET 1 - Provide protection against dust migration, rain, wind, storms, frost, or heat, so as to maintain all work, materials, apparatus and fixtures free from injury or damage.

PRODUCT DATA SHEET 2 - At end of each day's work, cover all new work likely to be damaged.

PRODUCT DATA SHEET 3 - Do not interrupt the integrity of the building security overnight.

PRODUCT DATA SHEET 4 - Refer to Division 01 for additional requirements.

PRODUCT DATA SHEET 5 - All pipe ends, valves and equipment left unconnected shall be capped, plugged or otherwise properly protected to prevent damage and the intrusion of foreign matter.

PRODUCT DATA SHEET 6 - Any equipment or piping systems found to have been damaged or contaminated above "MILL" or "SHOP" conditions shall be replaced or cleaned to the Owner's Representative satisfaction.

PRODUCT DATA SHEET 7 - Provide initial water seal fill for all waste P-traps or similar traps.

SCHEDULE 5 - PROTECTION OF POTABLE WATER SYSTEMS

PRODUCT DATA SHEET 1 - All temporary water connections shall be made with an approved back flow preventer.

PRODUCT DATA SHEET 2 - All hose bibs shall have as a minimum, a vacuum breaker, to prevent back flow.

PRODUCT DATA SHEET 3 - Direct connections to hydronic systems shall only be made through a reduced pressure back flow preventer.

SCHEDULE 6 - OBJECTIONABLE NOISE AND VIBRATION

PRODUCT DATA SHEET 1 - Mechanical equipment and piping system shall operate without objectionable noise and vibration, as determined by the judgment of the Owner's Representative.

PRODUCT DATA SHEET 2 - If objectionable noise and vibration should be produced, make necessary changes or additions required to produce satisfactory result without additional cost to the Owner.

SCHEDULE 7 - CLOSING-IN OF UN-INSPECTED WORK

PRODUCT DATA SHEET 1 - Do not allow or cause any work to be covered up or enclosed until inspected, tested and approved.

PRODUCT DATA SHEET 2 - Should any work be enclosed or covered up before such inspection and test, Contractor shall, at his/her own expense, uncover work and after it has been inspected, tested and approved, make repairs with such materials as necessary to restore his/her work and that of other Divisions to original and proper condition.

SCHEDULE 8 - CLEANING

PRODUCT DATA SHEET 1 - After installation is complete, clean all systems as indicated below.

PRODUCT DATA SHEET 2 - Piping and Equipment To Be Insulated: Clean exterior thoroughly to remove rust, plaster, cement and dirt before insulation is applied.

PRODUCT DATA SHEET 3 - Piping and Equipment Remain Un-insulated: Clean exterior thoroughly to remove rust, plaster, cement, dirt and other foreign substances.

PRODUCT DATA SHEET 4 - Piping and Equipment To Be Painted: Clean exterior to be exposed in completed structure. Remove rust, plaster, cement and dirt by wire brushing. Remove grease, oil and other foreign materials by wiping with clean rags and suitable solvents.

PRODUCT DATA SHEET 5 - During Progress of Work: Carefully clean up the premises and keep all portions of the building free of debris.

PRODUCT DATA SHEET 6 - Chrome Or Nickel Plated Work: Thoroughly polish.

SCHEDULE 9 - DAMAGE RESPONSIBILITY

PRODUCT DATA SHEET 1 - Contractor shall be responsible for damage to the grounds, buildings or equipment and the loss of refrigerants, fuels or gases, caused by leaks or breaks in pipes for equipment furnished or installed under this Division.

SCHEDULE 10 - PRELIMINARY OPERATION

PRODUCT DATA SHEET 1 - The Owner's Representative reserves the right to operate portions of the mechanical system on a preliminary basis without voiding the guarantee or relieving the Contractor of his/her responsibilities.

SCHEDULE 11 - OPERATIONAL TESTS

PRODUCT DATA SHEET 1 - Before operational tests are performed, demonstrate to the Owner's Representative that systems and components are complete and fully charged with operating fluid and lubricants. Systems shall be operable and capable of maintaining continuous uninterrupted operation during the operating and demonstration period.

PRODUCT DATA SHEET 2 - After systems have been completely installed, connections made, and tests completed, operate the systems continuously for a period of five working days during the hours of a normal working day.

PRODUCT DATA SHEET 3 - Rotating equipment shall be in dynamic balance and alignment.

PRODUCT DATA SHEET 4 - Tests required in various sections herein shall be completed.

PRODUCT DATA SHEET 5 - Notify the Owner's Representative, in writing, two weeks in advance of this operational period.

PRODUCT DATA SHEET 6 - This operational test may be concurrent with instruction of the Owner's operating personnel.

SCHEDULE 12 - COMPLIANCE TESTS

PRODUCT DATA SHEET 1 - Conduct tests for individual components, such as chiller, boiler, cooling tower, air handling unit, etc. of all portions of the installation as may be required by the various Sections of this Division to comply with the Contract Documents. Tests shall be made in the presence of the Owner's Representative. Costs of tests shall be borne by the Contractor. Contractor shall provide all instruments, equipment, labor and materials to complete the tests. These tests may be required at any time between the installation of the work and the end of the warranty period. Should these tests expose any defective materials, poor workmanship or variance with requirements of Contract Documents, Contractor shall make any changes necessary and remedy any defects at no cost to the Owner.

END OF SECTION 22 05 02

SECTION 22 05 03 - BASIC PLUMBING MATERIALS AND METHODS

PART 1 - GENERAL

SCHEDULE 1 - RELATED DOCUMENTS

PRODUCT DATA SHEET 1 - Drawings and general provisions of the Contract, including General and Supplementary Conditions and Division 1 Specification Sections, apply to this Section.

SCHEDULE 2 - SUMMARY

PRODUCT DATA SHEET 0 - This Section includes the following:

1.1 Piping materials and installation instructions common to most piping systems.

1.2 Transition fittings.

1.3 Dielectric fittings.

1.4 Mechanical sleeve seals.

1.5 Sleeves.

1.6 Escutcheons.

1.7 Grout.

1.8 Equipment installation requirements common to equipment sections.

1.9 Painting and finishing.

Concrete bases.

1.10 Supports and anchorages.

SCHEDULE 3 - DEFINITIONS

PRODUCT DATA SHEET 1 - Finished Spaces: Spaces other than mechanical and electrical equipment rooms, furred spaces, pipe and duct shafts, unheated spaces immediately below roof, spaces above ceilings, unexcavated spaces, crawlspaces, and tunnels.

PRODUCT DATA SHEET 2 - Exposed, Interior Installations: Exposed to view indoors. Examples include finished occupied spaces and mechanical equipment rooms.

PRODUCT DATA SHEET 3 - Exposed, Exterior Installations: Exposed to view outdoors or subject to outdoor ambient temperatures and weather conditions. Examples include rooftop locations.

PRODUCT DATA SHEET 4 - Concealed, Interior Installations: Concealed from view and protected from physical contact by building occupants. Examples include above ceilings and in duct shafts.

PRODUCT DATA SHEET 5 - Concealed, Exterior Installations: Concealed from view and protected from weather conditions and physical contact by building occupants but subject to outdoor ambient temperatures. Examples include installations within unheated shelters.

PRODUCT DATA SHEET 6 - The following are industry abbreviations for plastic materials:

1.1 ABS: Acrylonitrile-butadiene-styrene plastic.

1.2 CPVC: Chlorinated polyvinyl chloride plastic.

1.3 PE: Polyethylene plastic.

1.4 PVC: Polyvinyl chloride plastic.

PRODUCT DATA SHEET 7 - The following are industry abbreviations for rubber materials:

1.1 EPDM: Ethylene-propylene-diene terpolymer rubber.

1.2 NBR: Acrylonitrile-butadiene rubber.

SCHEDULE 4 - SUBMITTALS

PRODUCT DATA SHEET 1 - Product Data: For the following:

1.1 Transition fittings.

1.2 Dielectric fittings.

1.3 Mechanical sleeve seals.

1.4 Escutcheons.

PRODUCT DATA SHEET 2 - Welding certificates.

SCHEDULE 5 - QUALITY ASSURANCE

PRODUCT DATA SHEET 1 - Steel Support Welding: Qualify processes and operators according to AWS D1.1, "Structural Welding Code--Steel."

PRODUCT DATA SHEET 2 - Steel Pipe Welding: Qualify processes and operators according to ASME Boiler and Pressure Vessel Code: Section IX, "Welding and Brazing Qualifications."

1.1 Comply with provisions in ASME B31 Series, "Code for Pressure Piping."

1.2 Certify that each welder has passed AWS qualification tests for welding processes involved and that certification is current.

PRODUCT DATA SHEET 3 - Electrical Characteristics for Mechanical Equipment: Equipment of higher electrical characteristics may be furnished provided such proposed equipment is approved in writing and connecting electrical services, circuit breakers, and conduit sizes are appropriately

modified. If minimum energy ratings or efficiencies are specified, equipment shall comply with requirements.

SCHEDULE 6 - DELIVERY, STORAGE, AND HANDLING

PRODUCT DATA SHEET 1 - Deliver pipes and tubes with factory-applied end caps. Maintain end caps through shipping, storage, and handling to prevent pipe end damage and to prevent entrance of dirt, debris, and moisture.

PRODUCT DATA SHEET 2 - Store plastic pipes protected from direct sunlight. Support to prevent sagging and bending.

SCHEDULE 7 - COORDINATION

PRODUCT DATA SHEET 1 - Arrange for pipe spaces, chases, slots, and openings in building structure during progress of construction, to allow for mechanical installations.

PRODUCT DATA SHEET 2 - Coordinate installation of required supporting devices and set sleeves in poured-in-place concrete and other structural components as they are constructed.

PRODUCT DATA SHEET 3 - Coordinate requirements for access panels and doors for mechanical items requiring access that are concealed behind finished surfaces. Access panels and doors are specified in Division 8 Section "Access Doors and Frames."

PART 2 - PRODUCTS

SCHEDULE 1 - MANUFACTURERS

PRODUCT DATA SHEET 1 - In other Part 2 articles where subparagraph titles below introduce lists, the following requirements apply for product selection:

2.1 Manufacturers: Subject to compliance with requirements, provide products by the manufacturers specified.

SCHEDULE 2 - PIPE, TUBE, AND FITTINGS

PRODUCT DATA SHEET 1 - Refer to individual Division 22 piping Sections for pipe, tube, and fitting materials and joining methods.

PRODUCT DATA SHEET 2 - Pipe Threads: ASME B1.20.1 for factory-threaded pipe and pipe fittings.

SCHEDULE 3 - JOINING MATERIALS

PRODUCT DATA SHEET 1 - Refer to individual Division 22 piping Sections for special joining materials not listed below.

PRODUCT DATA SHEET 2 - Pipe-Flange Gasket Materials: Suitable for chemical and thermal conditions of piping system contents.

2.1 ASME B16.21, nonmetallic, flat, asbestos-free, 1/8-inch (3.2-mm) maximum thickness unless thickness or specific material is indicated.

A. Full-Face Type: For flat-face, Class 125, cast-iron and cast-bronze flanges.

B. Narrow-Face Type: For raised-face, Class 250, cast-iron and steel flanges.

2.2 AWWA C110, rubber, flat face, 1/8 inch (3.2 mm) thick, unless otherwise indicated; and full-face or ring type, unless otherwise indicated.

PRODUCT DATA SHEET 3 - Flange Bolts and Nuts: ASME B18.2.1, carbon steel, unless otherwise indicated.

PRODUCT DATA SHEET 4 - Plastic, Pipe-Flange Gasket, Bolts, and Nuts: Type and material recommended by piping system manufacturer, unless otherwise indicated.

PRODUCT DATA SHEET 5 - Solder Filler Metals: ASTM B 32, lead-free alloys. Include water-flushable flux according to ASTM B 813.

PRODUCT DATA SHEET 6 - Brazing Filler Metals: AWS A5.8, BCuP Series, copper-phosphorus alloys for general-duty brazing, unless otherwise indicated; and AWS A5.8, BAg1, silver alloy for refrigerant piping, unless otherwise indicated.

PRODUCT DATA SHEET 7 - Welding Filler Metals: Comply with AWS D10.12 for welding materials appropriate for wall thickness and chemical analysis of steel pipe being welded.

PRODUCT DATA SHEET 8 - Solvent Cements for Joining Plastic Piping:

2.1 ABS Piping: ASTM D 2235.

2.2 CPVC Piping: ASTM F 493.

2.3 PVC Piping: ASTM D 2564. Include primer according to ASTM F 656.

2.4 PVC to ABS Piping Transition: ASTM D 3138.

PRODUCT DATA SHEET 9 - Fiberglass Pipe Adhesive: As furnished or recommended by pipe manufacturer.

SCHEDULE 4 - TRANSITION FITTINGS

PRODUCT DATA SHEET 1 - AWWA Transition Couplings: Same size as, and with pressure rating at least equal to and with ends compatible with, piping to be joined.

2.1 Manufacturers:

A. Cascade Waterworks Mfg. Co.

B. Dresser Industries, Inc.; DMD Div.

C. Ford Meter Box Company, Incorporated (The); Pipe Products Div.

D. JCM Industries.

E. Smith-Blair, Inc.

F. Viking Johnson.

2.2 Underground Piping NPS 1-1/2 (DN 40) and Smaller: Manufactured fitting or coupling.

2.3 Underground Piping NPS 2 (DN 50) and Larger: AWWA C219, metal sleeve-type coupling.

2.4 Aboveground Pressure Piping: Pipe fitting.

PRODUCT DATA SHEET 2 - Plastic-to-Metal Transition Fittings: PVC one-piece fitting with manufacturer's Schedule 80 equivalent dimensions; one end with threaded brass insert, and one solvent-cement-joint end.

2.1 Manufacturers:

A. Eslon Thermoplastics.

PRODUCT DATA SHEET 3 - Plastic-to-Metal Transition Adaptors: One-piece fitting with manufacturer's SDR 11 equivalent dimensions; one end with threaded brass insert, and one solvent-cement-joint end.

2.1 Manufacturers:

A. Thompson Plastics, Inc.

PRODUCT DATA SHEET 4 - Plastic-to-Metal Transition Unions: MSS SP-107, PVC four-part union. Include brass end, solvent-cement-joint end, rubber O-ring, and union nut.

2.1 Manufacturers:

A. NIBCO INC.

B. NIBCO, Inc.; Chemtrol Div.

PRODUCT DATA SHEET 5 - Flexible Transition Couplings for Underground Nonpressure Drainage Piping: ASTM C 1173 with elastomeric sleeve, ends same size as piping to be joined, and corrosion-resistant metal band on each end.

2.1 Manufacturers:

A. Cascade Waterworks Mfg. Co.

B. Fernco, Inc.

C. Mission Rubber Company.

D. Plastic Oddities, Inc.

SCHEDULE 5 - DIELECTRIC FITTINGS

PRODUCT DATA SHEET 1 - Description: Combination fitting of copper alloy and ferrous materials with threaded, solder-joint, plain, or weld-neck end connections that match piping system materials.

PRODUCT DATA SHEET 2 - Insulating Material: Suitable for system fluid, pressure, and temperature.

PRODUCT DATA SHEET 3 - Dielectric Unions: Factory-fabricated, union assembly, for 250-psig (1725-kPa) minimum working pressure at 180 deg F (82 deg C).

2.1 Manufacturers:

A. Capitol Manufacturing Co.

B. Central Plastics Company.

C. Eclipse, Inc.

D. Epco Sales, Inc.

E. Hart Industries, International, Inc.

F. Watts Industries, Inc.; Water Products Div.

G. Zurn Industries, Inc.; Wilkins Div.

PRODUCT DATA SHEET 4 - Dielectric Flanges: Factory-fabricated, companion-flange assembly, for 150- or 300-psig (1035- or 2070-kPa) minimum working pressure as required to suit system pressures.

2.1 Manufacturers:

A. Capitol Manufacturing Co.

B. Central Plastics Company.

C. Epco Sales, Inc.

D. Watts Industries, Inc.; Water Products Div.

PRODUCT DATA SHEET 5 - Dielectric-Flange Kits: Companion-flange assembly for field assembly. Include flanges, full-face- or ring-type neoprene or phenolic gasket, phenolic or polyethylene bolt sleeves, phenolic washers, and steel backing washers.

2.1 Manufacturers:

A. Advance Products & Systems, Inc.

B. Calpico, Inc.

C. Central Plastics Company.

D. Pipeline Seal and Insulator, Inc.

2.2 Separate companion flanges and steel bolts and nuts shall have 150- or 300-psig (1035- or 2070-kPa) minimum working pressure where required to suit system pressures.

PRODUCT DATA SHEET 6 - Dielectric Couplings: Galvanized-steel coupling with inert and noncorrosive, thermoplastic lining; threaded ends; and 300-psig (2070-kPa) minimum working pressure at 225 deg F (107 deg C).

2.1 Manufacturers:

A. Calpico, Inc.

B. Lochinvar Corp.

PRODUCT DATA SHEET 7 - Dielectric Nipples: Electroplated steel nipple with inert and noncorrosive, thermoplastic lining; plain, threaded, or grooved ends; and 300-psig (2070-kPa) minimum working pressure at 225 deg F (107 deg C).

2.1 Manufacturers:

A. Perfection Corp.

B. Precision Plumbing Products, Inc.

C. Sioux Chief Manufacturing Co., Inc.

D. Victaulic Co. of America.

SCHEDULE 6 - MECHANICAL SLEEVE SEALS

PRODUCT DATA SHEET 1 - Description: Modular sealing element unit, designed for field assembly, to fill annular space between pipe and sleeve.

2.1 Manufacturers:

A. Advance Products & Systems, Inc.

B. Calpico, Inc.

C. Metraflex Co.

D. Pipeline Seal and Insulator, Inc.

2.2 Sealing Elements: EPDM or NBR interlocking links shaped to fit surface of pipe. Include type and number required for pipe material and size of pipe.

2.3 Pressure Plates: Carbon steel or stainless steel. Include two for each sealing element.

2.4 Connecting Bolts and Nuts: Carbon steel with corrosion-resistant coating or stainless steel of length required to secure pressure plates to sealing elements. Include one for each sealing element.

SCHEDULE 7 - SLEEVES

PRODUCT DATA SHEET 1 - Galvanized-Steel Sheet: 0.0239-inch (0.6-mm) minimum thickness; round tube closed with welded longitudinal joint.

PRODUCT DATA SHEET 2 - Steel Pipe: ASTM A 53, Type E, Grade B, Schedule 40, galvanized, plain ends.

PRODUCT DATA SHEET 3 - Cast Iron: Cast or fabricated "wall pipe" equivalent to ductile-iron pressure pipe, with plain ends and integral waterstop, unless otherwise indicated.

PRODUCT DATA SHEET 4 - Stack Sleeve Fittings: Manufactured, cast-iron sleeve with integral clamping flange. Include clamping ring and bolts and nuts for membrane flashing.

2.1 Underdeck Clamp: Clamping ring with set screws.

PRODUCT DATA SHEET 5 - Molded PVC: Permanent, with nailing flange for attaching to wooden forms.

PRODUCT DATA SHEET 6 - PVC Pipe: ASTM D 1785, Schedule 40.

PRODUCT DATA SHEET 7 - Molded PE: Reusable, PE, tapered-cup shaped, and smooth-outer surface with nailing flange for attaching to wooden forms.

SCHEDULE 8 - ESCUTCHEONS

PRODUCT DATA SHEET 1 - Description: Manufactured wall and ceiling escutcheons and floor plates, with an ID to closely fit around pipe, tube, and insulation of insulated piping and an OD that completely covers opening.

PRODUCT DATA SHEET 2 - One-Piece, Deep-Pattern Type: Deep-drawn, box-shaped brass with polished chrome-plated finish.

PRODUCT DATA SHEET 3 - One-Piece, Cast-Brass Type: With set screw.

2.1 Finish: Polished chrome-plated.

PRODUCT DATA SHEET 4 - Split-Casting, Cast-Brass Type: With concealed hinge and set screw.

2.1 Finish: Polished chrome-plated.

PRODUCT DATA SHEET 5 - One-Piece, Stamped-Steel Type: With set screw and chrome-plated finish.

PRODUCT DATA SHEET 6 - Split-Plate, Stamped-Steel Type: With concealed hinge, set screw, and chrome-plated finish.

PRODUCT DATA SHEET 7 - One-Piece, Floor-Plate Type: Cast-iron floor plate.

PRODUCT DATA SHEET 8 - Split-Casting, Floor-Plate Type: Cast brass with concealed hinge and set screw.

SCHEDULE 9 - GROUT

PRODUCT DATA SHEET 0 - Description: ASTM C 1107, Grade B, nonshrink and nonmetallic, dry hydraulic-cement grout.

2.1 Characteristics: Post-hardening, volume-adjusting, nonstaining, noncorrosive, nongaseous, and recommended for interior and exterior applications.

2.2 Design Mix: 5000-psi (34.5-MPa), 28-day compressive strength.

2.3 Packaging: Premixed and factory packaged.

PART 3 - EXECUTION

SCHEDULE 1 - PIPING SYSTEMS - COMMON REQUIREMENTS

PRODUCT DATA SHEET 1 - Install piping according to the following requirements and Division 22 Sections specifying piping systems.

PRODUCT DATA SHEET 2 - Drawing plans, schematics, and diagrams indicate general location and arrangement of piping systems. Indicated locations and arrangements were used to size pipe and calculate friction loss, expansion, pump sizing, and other design considerations. Install piping as indicated unless deviations to layout are approved on Coordination Drawings.

PRODUCT DATA SHEET 3 - Install piping in concealed locations, unless otherwise indicated and except in equipment rooms and service areas.

PRODUCT DATA SHEET 4 - Install piping indicated to be exposed and piping in equipment rooms and service areas at right angles or parallel to building walls. Diagonal runs are prohibited unless specifically indicated otherwise.

PRODUCT DATA SHEET 5 - Install piping above accessible ceilings to allow sufficient space for ceiling panel removal.

PRODUCT DATA SHEET 6 - Install piping to permit valve servicing.

PRODUCT DATA SHEET 7 - Install piping at indicated slopes.

PRODUCT DATA SHEET 8 - Install piping free of sags and bends.

PRODUCT DATA SHEET 9 - Install fittings for changes in direction and branch connections.

PRODUCT DATA SHEET 10 - Install piping to allow application of insulation.

PRODUCT DATA SHEET 11 - Select system components with pressure rating equal to or greater than system operating pressure.

PRODUCT DATA SHEET 12 - Install escutcheons for penetrations of walls, ceilings, and floors according to the following:

3.1 New Piping:

A. Piping with Fitting or Sleeve Protruding from Wall: One-piece, deep-pattern type.

B. Chrome-Plated Piping: One-piece, cast-brass type with polished chrome-plated finish.

C. Insulated Piping: One-piece, stamped-steel type with spring clips.

D. Bare Piping at Wall and Floor Penetrations in Finished Spaces: One-piece, cast-brass type with polished chrome-plated finish.

E. Bare Piping at Wall and Floor Penetrations in Finished Spaces: One-piece, stamped-steel type.

F. Bare Piping at Ceiling Penetrations in Finished Spaces: One-piece, cast-brass type with polished chrome-plated finish.

G. Bare Piping at Ceiling Penetrations in Finished Spaces: One-piece, stamped-steel type and set screw.

H. Bare Piping in Unfinished Service Spaces: One-piece, cast-brass type with rough-brass finish.

I. Bare Piping in Unfinished Service Spaces: One-piece, stamped-steel type with concealed or exposed-rivet hinge and set screw.

J. Bare Piping in Equipment Rooms: One-piece, cast-brass type.

K. Bare Piping in Equipment Rooms: One-piece, stamped-steel type with set screw or spring clips.

L. Bare Piping at Floor Penetrations in Equipment Rooms: One-piece, floor-plate type.

3.2 Sleeves are not required for core-drilled holes.

3.3 Permanent sleeves are not required for holes formed by removable PE sleeves.

3.4 Install sleeves for pipes passing through concrete and masonry walls and concrete floor and roof slabs.

PRODUCT DATA SHEET 13 - Install sleeves for pipes passing through concrete and masonry walls, gypsum-board partitions, and concrete floor and roof slabs.

3.1 Cut sleeves to length for mounting flush with both surfaces.

A. Exception: Extend sleeves installed in floors of mechanical equipment areas or other wet areas 2 inches (50 mm) above finished floor level. Extend cast-iron sleeve fittings below floor slab as required to secure clamping ring if ring is specified.

3.2 Install sleeves in new walls and slabs as new walls and slabs are constructed.

3.3 Install sleeves that are large enough to provide 1/4-inch (6.4-mm) annular clear space between sleeve and pipe or pipe insulation. Use the following sleeve materials:

A. Steel Pipe Sleeves: For pipes smaller than NPS 6 (DN 150).

B. Steel Sheet Sleeves: For pipes NPS 6 (DN 150) and larger, penetrating gypsum-board partitions.

C. Stack Sleeve Fittings: For pipes penetrating floors with membrane waterproofing. Secure flashing between clamping flanges. Install section of cast-iron soil pipe to extend sleeve to 2 inches (50 mm) above finished floor level. Refer to Division 7 Section "Sheet Metal Flashing and Trim" for flashing.

D. Seal space outside of sleeve fittings with grout.

PRODUCT DATA SHEET 14 - Except for underground wall penetrations, seal annular space between sleeve and pipe or pipe insulation, using joint sealants appropriate for size, depth, and location of joint. Refer to Division 7 Section "Joint Sealants" for materials and installation.

PRODUCT DATA SHEET 15 - Aboveground, Exterior-Wall Pipe Penetrations: Seal penetrations using sleeves and mechanical sleeve seals. Select sleeve size to allow for 1-inch (25-mm) annular clear space between pipe and sleeve for installing mechanical sleeve seals.

3.1 Install steel pipe for sleeves smaller than 6 inches (150 mm) in diameter.

3.2 Install cast-iron "wall pipes" for sleeves 6 inches (150 mm) and larger in diameter.

3.3 Mechanical Sleeve Seal Installation: Select type and number of sealing elements required for pipe material and size. Position pipe in center of sleeve. Assemble mechanical sleeve seals and install in annular space between pipe and sleeve. Tighten bolts against pressure plates that cause sealing elements to expand and make watertight seal.

PRODUCT DATA SHEET 16 - Underground, Exterior-Wall Pipe Penetrations: Install cast-iron "wall pipes" for sleeves. Seal pipe penetrations using mechanical sleeve seals. Select sleeve size to allow for 1-inch (25-mm) annular clear space between pipe and sleeve for installing mechanical sleeve seals.

3.1 Mechanical Sleeve Seal Installation: Select type and number of sealing elements required for pipe material and size. Position pipe in center of sleeve. Assemble mechanical sleeve seals and install in annular space between pipe and sleeve. Tighten bolts against pressure plates that cause sealing elements to expand and make watertight seal.

PRODUCT DATA SHEET 17 - Fire-Barrier Penetrations: Maintain indicated fire rating of walls, partitions, ceilings, and floors at pipe penetrations. Seal pipe penetrations with firestop materials. Refer to Division 7 Section "Through-Penetration Firestop Systems" for materials.

PRODUCT DATA SHEET 18 - Verify final equipment locations for roughing-in.

PRODUCT DATA SHEET 19 - Refer to equipment specifications in other Sections of these Specifications for roughing-in requirements.

SCHEDULE 2 - PIPING JOINT CONSTRUCTION

PRODUCT DATA SHEET 1 - Join pipe and fittings according to the following requirements and Division 22 Sections specifying piping systems.

PRODUCT DATA SHEET 2 - Ream ends of pipes and tubes and remove burrs. Bevel plain ends of steel pipe.

PRODUCT DATA SHEET 3 - Remove scale, slag, dirt, and debris from inside and outside of pipe and fittings before assembly.

PRODUCT DATA SHEET 4 - Soldered Joints: Apply ASTM B 813, water-flushable flux, unless otherwise indicated, to tube end. Construct joints according to ASTM B 828 or CDA's "Copper Tube Handbook," using lead-free solder alloy complying with ASTM B 32.

PRODUCT DATA SHEET 5 - Brazed Joints: Construct joints according to AWS's "Brazing Handbook," "Pipe and Tube" Chapter, using copper-phosphorus brazing filler metal complying with AWS A5.8.

PRODUCT DATA SHEET 6 - Threaded Joints: Thread pipe with tapered pipe threads according to ASME B1.20.1. Cut threads full and clean using sharp dies. Ream threaded pipe ends to remove burrs and restore full ID. Join pipe fittings and valves as follows:

3.1 Apply appropriate tape or thread compound to external pipe threads unless dry seal threading is specified.

3.2 Damaged Threads: Do not use pipe or pipe fittings with threads that are corroded or damaged. Do not use pipe sections that have cracked or open welds.

PRODUCT DATA SHEET 7 - Welded Joints: Construct joints according to AWS D10.12, using qualified processes and welding operators according to Part 1 "Quality Assurance" Article.

PRODUCT DATA SHEET 8 - Flanged Joints: Select appropriate gasket material, size, type, and thickness for service application. Install gasket concentrically positioned. Use suitable lubricants on bolt threads.

PRODUCT DATA SHEET 9 - Plastic Piping Solvent-Cement Joints: Clean and dry joining surfaces. Join pipe and fittings according to the following:

3.1 Comply with ASTM F 402 for safe-handling practice of cleaners, primers, and solvent cements.

3.2 ABS Piping: Join according to ASTM D 2235 and ASTM D 2661 Appendixes.

3.3 CPVC Piping: Join according to ASTM D 2846/D 2846M Appendix.

3.4 PVC Pressure Piping: Join schedule number ASTM D 1785, PVC pipe and PVC socket fittings according to ASTM D 2672. Join other-than-schedule-number PVC pipe and socket fittings according to ASTM D 2855.

3.5 PVC Non-pressure Piping: Join according to ASTM D 2855.

3.6 PVC to ABS Non-pressure Transition Fittings: Join according to ASTM D 3138 Appendix.

PRODUCT DATA SHEET 10 - Plastic Pressure Piping Gasketed Joints: Join according to ASTM D 3139.

PRODUCT DATA SHEET 11 - Plastic Non-pressure Piping Gasketed Joints: Join according to ASTM D 3212.

PRODUCT DATA SHEET 12 - PE Piping Heat-Fusion Joints: Clean and dry joining surfaces by wiping with clean cloth or paper towels. Join according to ASTM D 2657.

3.1 Plain-End Pipe and Fittings: Use butt fusion.

3.2 Plain-End Pipe and Socket Fittings: Use socket fusion.

PRODUCT DATA SHEET 13 - Fiberglass Bonded Joints: Prepare pipe ends and fittings, apply adhesive, and join according to pipe manufacturer's written instructions.

SCHEDULE 3 - PIPING CONNECTIONS

PRODUCT DATA SHEET 1 - Make connections according to the following, unless otherwise indicated:

3.1 Install unions, in piping NPS 2 (DN 50) and smaller, adjacent to each valve and at final connection to each piece of equipment.

3.2 Install flanges, in piping NPS 2-1/2 (DN 65) and larger, adjacent to flanged valves and at final connection to each piece of equipment.

3.3 Dry Piping Systems: Install dielectric unions and flanges to connect piping materials of dissimilar metals.

3.4 Wet Piping Systems: Install dielectric coupling and nipple fittings to connect piping materials of dissimilar metals.

SCHEDULE 4 - EQUIPMENT INSTALLATION - COMMON REQUIREMENTS

PRODUCT DATA SHEET 1 - Install equipment to allow maximum possible headroom unless specific mounting heights are not indicated.

PRODUCT DATA SHEET 2 - Install equipment level and plumb, parallel and perpendicular to other building systems and components in exposed interior spaces, unless otherwise indicated.

PRODUCT DATA SHEET 3 - Install mechanical equipment to facilitate service, maintenance, and repair or replacement of components. Connect equipment for ease of disconnecting, with minimum interference to other installations. Extend grease fittings to accessible locations.

PRODUCT DATA SHEET 4 - Install equipment to allow right of way for piping installed at required slope.

SCHEDULE 5 - PAINTING

PRODUCT DATA SHEET 0 - Painting of mechanical systems, equipment, and components is specified in Division 9 Section "Painting (Consumer Line Products) or Painting (Professional Line Products)."

PRODUCT DATA SHEET 1 - Damage and Touchup: Repair marred and damaged factory-painted finishes with materials and procedures to match original factory finish.

SCHEDULE 6 - CONCRETE BASES

PRODUCT DATA SHEET 1 - Concrete Bases: Anchor equipment to concrete base according to equipment manufacturer's written instructions and according to seismic codes at Project.

3.1 Construct concrete bases of dimensions indicated, but not less than 4 inches (100 mm) larger in both directions than supported unit.

3.2 Install dowel rods to connect concrete base to concrete floor. Unless otherwise indicated, install dowel rods on 18-inch (450-mm) centers around the full perimeter of the base.

3.3 Install epoxy-coated anchor bolts for supported equipment that extend through concrete base, and anchor into structural concrete floor.

3.4 Place and secure anchorage devices. Use supported equipment manufacturer's setting drawings, templates, diagrams, instructions, and directions furnished with items to be embedded.

3.5 Install anchor bolts to elevations required for proper attachment to supported equipment.

3.6 Install anchor bolts according to anchor-bolt manufacturer's written instructions.

3.7 Use 3000-psi (20.7-MPa), 28-day compressive-strength concrete and reinforcement as specified in Division 3 Section "Cast-in-Place Concrete or Cast-in-Place Concrete (Limited Applications)."

SCHEDULE 7 - ERECTION OF METAL SUPPORTS AND ANCHORAGES

PRODUCT DATA SHEET 1 - Refer to Division 5 Section "Metal Fabrications" for structural steel.

PRODUCT DATA SHEET 2 - Cut, fit, and place miscellaneous metal supports accurately in location, alignment, and elevation to support and anchor mechanical materials and equipment.

PRODUCT DATA SHEET 3 - Field Welding: Comply with AWS D1.1.

SCHEDULE 8 - ERECTION OF WOOD SUPPORTS AND ANCHORAGES

PRODUCT DATA SHEET 1 - Cut, fit, and place wood grounds, nailers, blocking, and anchorages to support, and anchor mechanical materials and equipment.

PRODUCT DATA SHEET 2 - Select fastener sizes that will not penetrate members if opposite side will be exposed to view or will receive finish materials. Tighten connections between members. Install fasteners without splitting wood members.

PRODUCT DATA SHEET 3 - Attach to substrates as required to support applied loads.

SCHEDULE 9 - GROUTING

PRODUCT DATA SHEET 1 - Mix and install grout for mechanical equipment base bearing surfaces, pump and other equipment base plates, and anchors.

PRODUCT DATA SHEET 2 - Clean surfaces that will come into contact with grout.

PRODUCT DATA SHEET 3 - Provide forms as required for placement of grout.

PRODUCT DATA SHEET 4 - Avoid air entrapment during placement of grout.

PRODUCT DATA SHEET 5 - Place grout, completely filling equipment bases.

PRODUCT DATA SHEET 6 - Place grout on concrete bases and provide smooth bearing surface for equipment.

PRODUCT DATA SHEET 7 - Place grout around anchors.

PRODUCT DATA SHEET 8 - Cure placed grout.

END OF SECTION 22 05 03

SECTION 22 05 23 - GENERAL DUTY VALVES FOR PLUMBING PIPING

PART 1 - GENERAL

SCHEDULE 1 - RELATED DOCUMENTS

PRODUCT DATA SHEET 0 - Drawings and general provisions of the Contract, including General and Supplementary Conditions and Division 01 Specification Sections, apply to this Section.

SCHEDULE 2 - SUBMITTALS

PRODUCT DATA SHEET 1 - Refer to Division 01 and Section 22 05 02, BASIC PLUMBING REQUIREMENTS.

PRODUCT DATA SHEET 2 - Manufacturer's Data: Submit Manufacturer's Product Data Including:

1.1 Dimensions.

1.2 Sizes.

1.3 End connections.

1.4 Weights.

1.5 Installation instructions.

1.6 Instructions on repacking and repairing valves.

1.7 Range of flow for balancing valves and plug valves.

1.8 Service pressure and temperatures.

1.9 Component materials.

PRODUCT DATA SHEET 3 - Valve Tag List: Refer to Section 22 05 53, PLUMBING IDENTIFICATION.

PART 2 - PRODUCTS

SCHEDULE 1 - VALVES TYPES AND SIZES

PRODUCT DATA SHEET 1 - General:

2.1 Provide all valves of first quality of approved manufacturer, have proper clearances, and be tight at the specified test pressure. All pressure ratings are in psi working pressure, unless otherwise indicated.

2.2 Mark on each valve provided with the maker's name or brand, the figure or list number, and the guaranteed working pressure cast on the body and cast or stamped on the bonnet.

2.3 All gate and globe valves suitable for repacking under pressure. Regardless of service, valves not acceptable when designed for less than 125 pounds per square inch working pressure.

2.4 All valves must be of the product of one manufacturer, except for special application.

2.5 Figure numbers of manufacturers are listed to indicate the types selected for design, performance and standard of quality.

2.6 All valves installed in insulated pipe shall have 2" stem extension and the following features:

A. Gate vales: Shall be rising-stem type.

B. Ball valves: Shall have extended operating handle of non-thermal-conductive material, protective sleeve that allows operation of valve without breaking the vapor seal or disturbing insulation, and memory stops that are fully adjustable after insulation is applied.

C. Butterfly valves: Shall have extended necks.

PRODUCT DATA SHEET 2 - Manufacturers:

2.1 Gate, Globe, Stop Check, and Swing Check Valves: Nibco or equivalent by Milwaukee, Walworth, Hammond, Stockham or Jenkins.

2.2 Spring Loaded Check Valves: Nibco or equivalent by Milwaukee, Hammond, Miller Silent or Mueller.

2.3 Butterfly Valves: Nibco or equivalent by Milwaukee, Demco, Hammond, Mueller, Keystone or Stockham.

2.4 Ball Valves: Nibco or equivalent by Milwaukee, Walworth, Hammond, Jenkins or Dynaquip.

2.5 Plug Valves: DeZurik, Keystone/Drum-Owen, Xomox or equivalent.

2.6 Gas Cocks: Walworth or equivalent by Homestead or Stockham.

SCHEDULE 2 - GLOBE VALVES

PRODUCT DATA SHEET 1 - Globe Valves:

2.1 2" and Smaller: Class 150, 150 PSI SWP, bronze, renewable Teflon disc, union bonnet. Nibco T-275.

2.2 2-1/2" and Larger: Class 150, 150 PSI SWP, iron body, flanged, renewable seat and disc, bolted bonnet, bronze mounted. Nibco F-768-B.

SCHEDULE 3 - CHECK VALVES

PRODUCT DATA SHEET 1 - Swing Check Valve – Water Service Up to 140°F (For Horizontal Installation Only):

2.1 2” and Smaller: Class 150, 150 PSI SWP, bronze, threaded, horizontal swing, Y-pattern, renewable teflon disc, regrinding type , screw-in cap. Nibco T-433.

2.2 2-1/2” and Larger: Class 150, 150 PSI SWP, iron body, flanged, horizontal swing, renewable bronze disc and seat ring, regrinding type, bolted bonnet, bronze trim. Nibco F-918.

PRODUCT DATA SHEET 2 - Swing Check Valve – Water Service Over 140°F (For Horizontal Installation Only):

2.1 2” and Smaller: Class 175, 175 PSI SWP, bronze, threaded, horizontal swing, Y-pattern, renewable teflon disc, regrinding type , screw-in cap. Nibco T-473.

2.2 2-1/2” and Larger: Class 175, 175 PSI SWP, iron body, flanged, horizontal swing, renewable bronze disc and seat ring, regrinding type, bolted bonnet, bronze trim. Nibco F-968-B.

PRODUCT DATA SHEET 3 - Spring Loaded (Silent) Check Valves – (For Vertical Installation Only. Not to be Installed on Sewage Ejector or Sump Pump Discharge):

2.1 2” and Smaller: Class 125, 125 PSI SWP, bronze body, threaded, center guided stainless steel disc, teflon seat, stainless steel spring and trim. Nibco T-480.

2.2 2-1/2” and Larger: Cast iron, globe type body, flanged, 150 lb. WOG, center guided bronze disc, Buna-N seat, stainless steel spring and trim. Nibco F-960.

SCHEDULE 4 - BUTTERFLY VALVES

PRODUCT DATA SHEET 1 - Butterfly Valves – Service up to 225°F (Non-Potable Water Service Only):

2.1 Valves: Iron body of the full lug type, stainless steel upper and lower stems, aluminum bronze disc, EPT (EPDM) seat, 150 lb. working pressure form -40°F to 225°F limited fluid temperature. Nibco LD-3022.

2.2 Valves designed for installation between Std. ANSI 125/150 flanges. Lug holes threaded.

2.3 Valves 6” and Smaller: Provide lever operator with position indicator.

2.4 Valves 8” and Larger: Provide gear operator with position indicator.

2.5 Valves on insulated piping to be provided with a neck extension 2” above outside diameter of flanges to accommodate full thickness of insulation.

SCHEDULE 5 - GATE VALVES

PRODUCT DATA SHEET 1 - Gate Valve – Water Service up to 140°F:

2.1 2” and Smaller: Class 175, 175 PSI SWP, bronze, rising stem, inside screw, union bonnet, solid disc, stainless steel seats. Nibco T-174-SS.

2.2 2-1/2” and Larger: Class 250, 250 PSI SWP, cast iron body, flanged, outside screw and yoke, bolted bonnet, bronze mounted. Nibco F-617-0.

SCHEDULE 6 - BALL VALVES

PRODUCT DATA SHEET 1 - Ball Valves 2" and Smaller: Full port, two-piece, threaded bronze body, Type 316 stainless steel stem and ball, reinforced TFE seat ring, extended blowout stem with vapor seal and protective sleeve for insulated piping, lever or tee handle, 150 lb. SWP. Nibco T-585-70-66.

SCHEDULE 7 - DRAIN VALVES

PRODUCT DATA SHEET 1 - Gate or ball valve with hose end adapter, cap, and chain.

SCHEDULE 8 - PLUG VALVES

PRODUCT DATA SHEET 1 - Plug Valves:

2.1 2' and Smaller: Cast iron body, screwed, EPDM coated eccentric plug, pet cocks, memory stop, non-lubricated, 175 lb. WOG. Keystone/Drum-Owen 1512.

2.2 2-1/2" and Larger: Flanged, non-lubricated, cast iron body and EPDM coated eccentric plug, pet cocks, memory stop, non-lubricated, 175 lbs. WOG. Keystone/Drum-Owen 1522.

SCHEDULE 9 - MANUAL BALANCING VALVES

PRODUCT DATA SHEET 1 - Valves shall be of bronze body/brass ball construction with glass and carbon filled TFE seat rings.

PRODUCT DATA SHEET 2 - Valves shall have differential pressure read-out ports across valve seat area. Read-out ports shall be filled with internal EPT inserts and check valves.

PRODUCT DATA SHEET 3 - Valve bodies shall have 1/4" NPT topped drain/purge port.

PRODUCT DATA SHEET 4 - Valve to have memory stop and calibrated nameplates to assure specific valve settings.

PRODUCT DATA SHEET 5 - Manufacturer: Bell & Gossett Circuit Setter or equal.

PART 3 - EXECUTION

SCHEDULE 1 - GENERAL

PRODUCT DATA SHEET 1 - Install valves with stems pointing up, and as close to vertical as possible.

PRODUCT DATA SHEET 2 - Install valves at each piece of equipment, fixture or appliance so that the supply and return services can be shut off to remove the item and associated piping specialties without draining the remainder of the piping system.

PRODUCT DATA SHEET 3 - Install valves where required for proper operation of piping and equipment, including valves in branch lines where necessary to isolate sections of piping.

PRODUCT DATA SHEET 4 - Locate valves so as to be accessible.

PRODUCT DATA SHEET 5 - Provide drain valves at main shut-off valves, low points of piping and apparatus.

PRODUCT DATA SHEET 6 - Provide separate support where necessary.

PRODUCT DATA SHEET 7 - Do not allow meter connections of balancing valves to point downward.

PRODUCT DATA SHEET 8 - Install valves so bypass valves are accessible.

PRODUCT DATA SHEET 9 - All valves of a given type shall be of one manufacturer.

PRODUCT DATA SHEET 10 - Provide extended stems on insulated system to prevent interference of operator with insulation.

PRODUCT DATA SHEET 11 - Provide chain wheel operators for valves 4" and larger that are more than 8' above finished floor in mechanical room and on roof.

PRODUCT DATA SHEET 12 - Provide unions or flanges on piping at inlet and outlet of all equipment or apparatus. Install unions and flanges in accessible locations.

PRODUCT DATA SHEET 13 - Triple duty valve at discharge side of pump may be used instead of a separate balancing valve, check valve, and shutoff valve, if and only if, an additional/separate shutoff valve located downstream of the triple duty valve is provided with no additional cost to the Owner.

SCHEDULE 2 - CHECK VALVE INSTALLATION

PRODUCT DATA SHEET 1 - Swing and Wafer Check Valves:

3.1 Install only in horizontal lines unless absolutely impractical. If installed vertically, flow shall be upwards.

3.2 Do not install in pump discharge piping.

PRODUCT DATA SHEET 2 - Silent Check Valves:

3.1 Install in all pump discharge lines.

3.2 Silent check valves may be installed in vertical pipes with flow down upon Engineer's review for each instance.

END OF SECTION 22 05 23

SECTION 22 05 53 – PLUMBING IDENTIFICATION

PART 1 - GENERAL

SCHEDULE 1 - RELATED DOCUMENTS:

PRODUCT DATA SHEET 1 - Drawings and general provisions of the Contract, including General and Supplementary Conditions and Division 1 Specification Sections, apply to this Section.

SCHEDULE 2 - SUMMARY:

PRODUCT DATA SHEET 1 - This Section includes the following mechanical identification materials and their installation:

1.1 Equipment nameplates.

1.2 Equipment markers.

1.3 Equipment signs.

1.4 Access panel and door markers.

1.5 Pipe markers.

1.6 Stencils.

1.7 Valve tags.

1.8 Valve schedules.

1.9 Warning tags.

SCHEDULE 3 - SUBMITTALS:

PRODUCT DATA SHEET 1 - Product Data: For each type of product indicated.

PRODUCT DATA SHEET 2 - Samples: For color, letter style, and graphic representation required for each identification material and device.

PRODUCT DATA SHEET 3 - Valve numbering scheme.

PRODUCT DATA SHEET 4 - Valve Schedules: For each piping system. Furnish extra copies (in addition to mounted copies) to include in maintenance manuals.

SCHEDULE 4 - QUALITY ASSURANCE:

PRODUCT DATA SHEET 1 - ASME Compliance: Comply with ASME A13.1, "Scheme for the Identification of Piping Systems," for letter size, length of color field, colors, and viewing angles of identification devices for piping.

SCHEDULE 5 - COORDINATION:

PRODUCT DATA SHEET 1 - Coordinate installation of identifying devices with completion of covering and painting of surfaces where devices are to be applied.

PRODUCT DATA SHEET 2 - Coordinate installation of identifying devices with location of access panels and doors.

PRODUCT DATA SHEET 3 - Install identifying devices before installing ceilings.

PART 2 - PRODUCTS

SCHEDULE 1 - EQUIPMENT IDENTIFICATION DEVICES:

PRODUCT DATA SHEET 1 - Equipment Nameplates: Laminated plastic, with data engraved or stamped, for permanent attachment on equipment.

2.1 Data:

A. Manufacturer, product name, model number, and serial number.

B. Capacity, operating and power characteristics, and essential data.

C. Labels of tested compliances.

2.2 Location: Accessible and visible.

2.3 Fasteners: As required to mount on equipment.

PRODUCT DATA SHEET 2 - Equipment Markers: Engraved, color-coded laminated plastic. Include contact-type, permanent adhesive.

2.1 Terminology: Match schedules as closely as possible.

2.2 Data:

A. Name and plan number.

B. Equipment service.

C. Design capacity.

D. Other design parameters such as pressure drop, entering and leaving conditions, and speed.

2.3 Size: 2-1/2 by 4 inches (64 by 100 mm) for control devices, dampers, and valves; 4-1/2 by 6 inches (115 by 150 mm) for equipment.

PRODUCT DATA SHEET 3 - Equipment Signs: ASTM D 709, Type I, cellulose, paper-base, phenolic-resin-laminate engraving stock; Grade ES-2, black surface, black phenolic core, with white

melamine subcore, unless otherwise indicated. Fabricate in sizes required for message. Provide holes for mechanical fastening.

2.1 Data: Instructions for operation of equipment and for safety procedures.

2.2 Engraving: Manufacturer's standard letter style, of sizes and with terms to match equipment identification.

2.3 Thickness: 1/16 inch (1.6 mm) for units up to 20 sq. in. (130 sq. cm) or 8 inches (200 mm) in length, and 1/8 inch (3.2 mm) for larger units.

2.4 Fasteners: Self-tapping, stainless-steel screws or contact-type, permanent adhesive.

PRODUCT DATA SHEET 4 - Access Panel and Door Markers: 1/16-inch- (1.6-mm-) thick, engraved laminated plastic, with abbreviated terms and numbers corresponding to identification. Provide 1/8-inch (3.2-mm) center hole for attachment.

2.1 Fasteners: Self-tapping, stainless-steel screws or contact-type, permanent adhesive.

SCHEDULE 2 - PIPING IDENTIFICATION DEVICES:

PRODUCT DATA SHEET 1 - Manufactured Pipe Markers, General: Preprinted, color-coded, with lettering indicating service, and showing direction of flow.

2.1 Colors: Comply with ASME A13.1, unless otherwise indicated.

2.2 Lettering: Use piping system terms indicated and abbreviate only as necessary for each application length.

2.3 Pipes with OD, Including Insulation, Less Than 6 Inches (150 mm): Full-band pipe markers extending 360 degrees around pipe at each location.

2.4 Arrows: Integral with piping system service lettering to accommodate both directions; or as separate unit on each pipe marker to indicate direction of flow.

PRODUCT DATA SHEET 2 - Pre-tensioned Pipe Markers: Pre-coiled semi-rigid plastic formed to cover full circumference of pipe and to attach to pipe without adhesive.

PRODUCT DATA SHEET 3 - Shaped Pipe Markers: Preformed semi-rigid plastic formed to partially cover circumference of pipe and to attach to pipe with mechanical fasteners that do not penetrate insulation vapor barrier.

PRODUCT DATA SHEET 4 - Self-Adhesive Pipe Markers: Plastic with pressure-sensitive, permanent-type, self-adhesive back.

PRODUCT DATA SHEET 5 - Plastic Tape: Continuously printed, vinyl tape at least 3 mils (0.08 mm) thick with pressure-sensitive, permanent-type, self-adhesive back.

2.1 Width for Markers on Pipes with OD, Including Insulation, Less Than 6 Inches (150 mm): 3/4 inch (19 mm) minimum.

SCHEDULE 3 - DUCT IDENTIFICATION DEVICES:

PRODUCT DATA SHEET 1 - Duct Markers: Engraved, color-coded laminated plastic. Include direction and quantity of airflow and duct service (such as supply, return, and exhaust). Include contact-type, permanent adhesive.

SCHEDULE 4 - STENCILS:

PRODUCT DATA SHEET 1 - Stencils: Prepared with letter sizes according to ASME A13.1 for piping; minimum letter height of 1-1/4 inches (32 mm) for ducts; and minimum letter height of 3/4 inch (19 mm) for access panel and door markers, equipment markers, equipment signs, and similar operational instructions.

2.1 Stencil Material: Metal or fiberboard.

2.2 Stencil Paint: Exterior, gloss, alkyd enamel black, unless otherwise indicated. Paint may be in pressurized spray-can form.

2.3 Identification Paint: Exterior, alkyd enamel in colors according to ASME A13.1, unless otherwise indicated.

SCHEDULE 5 - VALVE TAGS:

PRODUCT DATA SHEET 1 - Valve Tags: Stamped or engraved with 1/4-inch (6.4-mm) letters for piping system abbreviation and 1/2-inch (13-mm) numbers, with numbering scheme. Provide 5/32-inch (4-mm) hole for fastener.

2.1 Material: 0.032-inch- (0.8-mm-) thick brass.

2.2 Material: 0.0375-inch- (1-mm-) thick stainless steel.

2.3 Material: 3/32-inch- (2.4-mm-) thick laminated plastic with 2 black surfaces and white inner layer.

2.4 Valve-Tag Fasteners: Brass beaded chain.

SCHEDULE 6 - VALVE SCHEDULES:

PRODUCT DATA SHEET 1 - Valve Schedules: For each piping system, on standard-size bond paper. Tabulate valve number, piping system, system abbreviation (as shown on valve tag), location of valve (room or space), normal-operating position (open, closed, or modulating), and variations for identification. Mark valves for emergency shutoff and similar special uses.

2.1 Valve-Schedule Frames: Glazed display frame for removable mounting on masonry walls for each page of valve schedule. Include mounting screws.

2.2 Frame: Extruded aluminum.

2.3 Glazing: ASTM C 1036, Type I, Class 1, Glazing Quality B, 2.5-mm, single-thickness glass.

SCHEDULE 7 - WARNING TAGS:

PRODUCT DATA SHEET 1 - Warning Tags: Preprinted or partially preprinted, accident-prevention tags; of plasticized card stock with matte finish suitable for writing.

2.1 Size: Approximately 4 by 7 inches (100 by 178 mm).

2.2 Fasteners: Brass grommet and wire.

2.3 Nomenclature: Large-size primary caption such as DANGER, CAUTION, or DO NOT OPERATE.

2.4 Color: Yellow background with black lettering.

PART 3 - EXECUTION

SCHEDULE 1 - APPLICATIONS, GENERAL:

PRODUCT DATA SHEET 1 - Products specified are for applications referenced in other Division 15 Sections. If more than single-type material, device, or label is specified for listed applications, selection is Installer's option.

SCHEDULE 2 - EQUIPMENT IDENTIFICATION:

PRODUCT DATA SHEET 1 - Install and permanently fasten equipment nameplates on each major item of mechanical equipment that does not have nameplate or has nameplate that is damaged or located where not easily visible. Locate nameplates where accessible and visible. Include nameplates for the following general categories of equipment:

3.1 Heaters.

3.2 Heat pumps.

3.3 Fans and blowers.

3.4 Packaged HVAC units.

3.5 Furnaces.

PRODUCT DATA SHEET 2 - Install equipment markers with permanent adhesive on or near each major item of mechanical equipment. Data required for markers may be included on signs, and markers may be omitted if both are indicated.

3.1 Letter Size: Minimum 1/4 inch (6.4 mm) for name of units if viewing distance is less than 24 inches (600 mm), 1/2 inch (13 mm) for viewing distances up to 72 inches (1830 mm), and proportionately larger lettering for greater viewing distances. Include secondary lettering two-thirds to three-fourths the size of principal lettering.

3.2 Data: Distinguish among multiple units, indicate operational requirements, indicate safety and emergency precautions, warn of hazards and improper operations, and identify units.

3.3 Locate markers where accessible and visible. Include markers for the following general categories of equipment:

A. Main control and operating valves, including safety devices and hazardous units.

B. Fire department hose valves and hose stations.

C. Heat pumps.

D. Heaters.

E. Pumps and similar motor-driven units.

F. Fans and blowers.

G. Packaged HVAC zone-type units.

H. Furnaces.

PRODUCT DATA SHEET 3 - Stenciled Equipment Marker Option: Stenciled markers may be provided instead of laminated-plastic equipment markers, at Installer's option, if lettering larger than 1 inch (25 mm) high is needed for proper identification because of distance from normal location of required identification.

PRODUCT DATA SHEET 4 - Install equipment signs with screws or permanent adhesive on or near each major item of mechanical equipment. Locate signs where accessible and visible.

3.1 Letter Size: Minimum 1/2 inch (13 mm) for viewing distances up to 72 inches (1830 mm), and proportionately larger lettering for greater viewing distances. Include secondary lettering two-thirds to three-fourths the size of principal lettering.

3.2 Data: Distinguish among multiple units, indicate operational requirements, indicate safety and emergency precautions, warn of hazards and improper operations, and identify units.

3.3 Include signs for the following general categories of equipment:

A. Main control and operating valves, including safety devices and hazardous units such as gas outlets.

B. Heaters.

C. Heat pumps.

D. Fans and blowers.

E. Packaged HVAC units.

F. Furnaces.

PRODUCT DATA SHEET 5 - Stenciled Equipment Sign Option: Stenciled signs may be provided instead of laminated-plastic equipment signs, at Installer's option, if lettering larger than 1 inch (25

mm) high is needed for proper identification because of distance from normal location of required identification.

PRODUCT DATA SHEET 6 - Install access panel markers with screws on equipment access panels.

SCHEDULE 3 - PIPING IDENTIFICATION:

PRODUCT DATA SHEET 0 - Install manufactured pipe markers indicating service on each piping system. Install with flow indication arrows showing direction of flow.

3.1 Pipes with OD, Including Insulation, Less Than 6 Inches (150 mm): Pretensioned pipe markers. Use size to ensure a tight fit.

3.2 Pipes with OD, Including Insulation, Less Than 6 Inches (150 mm): Self-adhesive pipe markers. Use color-coded, self-adhesive plastic tape, at least 3/4 inch (19 mm) wide, lapped at least 1-1/2 inches (38 mm) at both ends of pipe marker, and covering full circumference of pipe.

PRODUCT DATA SHEET 1 - Stenciled Pipe Marker Option: Stenciled markers may be provided instead of manufactured pipe markers, at Installer's option. Install stenciled pipe markers complying with ASME A13.1 on each piping system.

3.1 Identification Paint: Use for contrasting background.

3.2 Stencil Paint: Use for pipe marking.

PRODUCT DATA SHEET 2 - Locate pipe markers and color bands where piping is exposed in finished spaces; machine rooms; accessible maintenance spaces such as shafts, tunnels, and plenums; and exterior nonconcealed locations as follows:

3.1 Near each valve and control device.

3.2 Near each branch connection, excluding short takeoffs for fixtures and terminal units. Where flow pattern is not obvious, mark each pipe at branch.

3.3 Near penetrations through walls, floors, ceilings, and nonaccessible enclosures.

3.4 At access doors, manholes, and similar access points that permit view of concealed piping.

3.5 Near major equipment items and other points of origination and termination.

3.6 Spaced at maximum intervals of 50 feet (15 m) along each run. Reduce intervals to 25 feet (7.6 m) in areas of congested piping and equipment.

SCHEDULE 4 - VALVE-TAG INSTALLATION:

PRODUCT DATA SHEET 1 - Install tags on valves and control devices in piping systems, except check valves; valves within factory-fabricated equipment units; plumbing fixture supply stops; shutoff valves; faucets; convenience and lawn-watering hose connections. List tagged valves in a valve schedule.

PRODUCT DATA SHEET 2 - Valve-Tag Application Schedule: Tag valves according to size, shape, and color scheme and with captions similar to those indicated in the following:

3.1 Valve-Tag Size and Shape:

A. Cold Water: 1-1/2 inches (38 mm), round.

B. Hot Water: 1-1/2 inches (38 mm), round.

C. Fire Protection: 1-1/2 inches (38 mm), round.

3.2 Valve-Tag Color:

A. Cold Water: Blue.

B. Hot Water: Red.

C. Fire Protection: Black.

3.3 Letter Color:

A. Cold Water: White.

B. Hot Water: White.

C. Fire Protection: Black.

SCHEDULE 5 - VALVE-SCHEDULE INSTALLATION:

PRODUCT DATA SHEET 1 - Mount valve schedule on wall in accessible location in each major equipment room.

SCHEDULE 6 - WARNING-TAG INSTALLATION:

PRODUCT DATA SHEET 1 - Write required message on, and attach warning tags to, equipment and other items where required.

SCHEDULE 7 - ADJUSTING:

PRODUCT DATA SHEET 1 - Relocate mechanical identification materials and devices that have become visually blocked by other work.

END OF SECTION 22 05 53

SECTION 22 07 00 - PLUMBING INSULATION

PART 1 – GENERAL

1.1 RELATED DOCUMENTS

1.1.1 Drawings and general provisions of the Contract, including General and Supplementary Conditions and Division 01 Specification Sections, apply to this Section.

1.2 SUMMARY

1.2.1 Provide all plumbing insulation as indicated on the Drawings and as specified, complete.

1.3 SUBMITTALS

1.3.1 Refer to Division 01 and Section 22 05 02, BASIC PLUMBING REQUIREMENTS.

1.3.2 Submit Manufacturer's Product Data on the Following:

1.3.2.1 Insulation.

1.3.2.2 Jackets, coatings and protective finishes.

1.3.2.3 Sealers, mastics and adhesives.

1.3.2.4 Fitting covers.

1.3.2.5 Inserts.

1.4 GENERAL

1.4.1 Provide insulation tested on a composite basis (insulation, jacket, covering, sealer, mastic and adhesive) fire and smoke hazard ratings as tested by procedure ASTM E-84, NFPA 255, and UL 723 not exceeding:

1.4.1.1 Flame Spread: 25 or Less.

1.4.1.2 Smoke Developed: 50 or Less.

1.4.2 Accessories such as adhesives, mastics, cements, tapes and fiberglass cloth for fittings shall have the same component rating as listed above.

1.4.3 Insulation shall comply with FS-HH-1-552, HH-1-561, ASTM-C 547-67 and MIL-1-22344B.

1.4.4 Products to be installed in air plenums (ceiling return air, fan rooms, etc.) shall be faced material WITH NO FIBERGLASS EXPOSED TO THE AIR and shall comply with NFPA Standards 90A and 90B.

1.5 PRODUCT DELIVERY

1.5.1 Deliver insulation products in factory containers bearing manufacturer's label showing fire hazard rating, density and thickness.

1.6 DEFINITIONS

1.6.1 Exposed Location: Located in mechanical rooms or other areas exposed to view.

1.6.2 Concealed Location: Located in pipe chases, furred spaces, attics, crawl spaces, above suspended ceilings, or other locations not exposed to view.

1.7 COMPLIANCE

1.7.1 Comply with the latest edition of National Commercial and Industrial Insulation Standards.

1.7.2 Comply with the latest edition of the California Energy Commission Title 24 requirements.

PART 2 - PRODUCTS

2.1 GENERAL

2.1.1 Manufacturers: Owens-Corning, Johns Manville, CertainTeed, Normaco, or Knauf.

2.2 PIPE INSULATION

2.2.1 Materials:

2.2.1.1 Fiberglass Pipe Insulation: Johns Manville Micro-Lok heavy density pipe insulation with ASJ jacket.

2.2.1.2 Fiberglass Pipe Fitting Insulation: Johns Manville "Zeston" fitting covers with factory-cut fiberglass insulation insert.

2.2.1.3 Flexible Unicellular Pipe Insulation: Nomaco Therma-cel.

2.2.2 Thickness: (Thickness listed below is the minimum required. Provide thickness required by Local Building or Energy codes.)

2.2.2.1 Service (Domestic) Hot Water Piping:

2.2.2.1.1 2" and Smaller: 1"

2.2.2.1.2 2½" and Larger: 1-1/2"

2.2.2.1.3 Runouts up to 2" and 10 Feet Long: 1/2".

2.2.2.2 Storm and storm overflow Piping, storm and overflow drain bodies:

2.2.2.2.1 1-1/2"

2.2.2.3 Interior condensate piping: 1-1/2"

2.2.3 Application: Unless Otherwise Indicated, Use the Following:

2.2.3.1 Inside, Above Ground: Fiberglass.

2.2.3.2 Exposed to View (Inside Building): Fiberglass with PVC jacket.

2.2.3.3 Outside, Exposed: Rigid closed cell with aluminum jacket.

2.2.4 PVC:

2.2.4.1 1½" thick fiberglass (duct) insulation, or 1" heavy density pipe insulation, installation to meet ASTM E84 (NFPA 255) flame spread and smoke developed ratings.

2.3 EQUIPMENT INSULATION

2.3.1 Materials:

2.3.1.1 Domestic hot water storage tank and equipment insulation.

2.3.1.1.1 Description: Flexible board type insulation. 3 PCF glass fiber insulation with all purpose jacketing. Maximum thermal conductivity 0.32 BTU-IN/(hr-FT^2-°F) at 150°F. Glass fibers oriented such that insulation will conform to rounded shapes while maintaining high compressive strength.

2.3.1.2 Equipment Insulation Accessories: Provide staples, bands, wire, wire netting, tape, corner angles, anchors, stud pins, metal covers, adhesives, cements, sealers, mastics and protective finishes as recommended by insulation manufacturer for applications indicated.

2.4 EXPOSED DRAINS, TRAPS AND DOMESTIC WATER SUPPLIES AT PLUMBING FIXTURES DESIGNATED FOR HANDICAPPED USE

2.4.1 Fully molded, flexible molded finished insulation with P-trap assembly and two angle valve and water riser assemblies. Truebo Model No. 102 or equivalent by Bocar Products, Inc., McGuire Manufacturing Co., Inc., ProWrap or TCI Products.

2.5 Stormwater and Overflow:

2.5.1 All Pipe Sizes: Insulation shall be the following:

2.5.1.1 Fiberglass pipe insulation.

2.6 Roof Drain and Overflow Drain Bodies:

2.6.1 All Pipe Sizes: Insulation shall be the following:

2.6.1.1 Fiberglass pipe insulation.

PART 3 - EXECUTION

3.1 GENERAL

3.1.1 Verify acceptability of all materials, which are to be used in air plenums (above ceiling, etc.). Materials must meet all requirements of the Local Building Code and Authority having jurisdiction.

3.2 PIPE INSULATION

3.2.1 Insulate the following:

3.2.1.1 Domestic hot water piping.

3.2.1.2 Roof drain bodies and all horizontal storm water piping.

3.2.1.3 Condensate piping inside building from cooling coils.

3.2.2 Thickness: (Thickness listed below is the minimum required. Provide thickness required by Local Building or Energy Codes.)

3.2.2.1 Domestic hot water pump: 1”

3.2.2.2 Domestic hot water storage tank: 2”

3.2.3 Condensate and Equipment Drain Water below 60 Deg F:

3.2.3.1 All Pipe Sizes: Insulation shall be any of the following:.

3.2.3.1.1 Flexible Elastomeric: 3/4 inch thick.

3.2.4 Installation:

3.2.4.1 Install insulation on pipe system subsequent to testing and acceptance of tests.

3.2.4.2 Install insulation materials with smooth and even surfaces.

3.2.4.3 Insulate each continuous run of piping with full length units of insulation, with a single cut piece to complete the run.

3.2.4.4 Do not use cut pieces or scraps abutting each other.

3.2.4.5 Clean and dry pipe surfaces prior to insulating.

3.2.4.5.1 Butt insulation joints firmly together to ensure a complete and tight fit over surfaces to be covered.

3.2.4.6 Extend piping insulation without interruption through pipe clamps, hangers, walls, floors and similar piping penetrations, except where otherwise indicated.

3.2.4.7 Install protective metal shields, inserts and saddles where needed to prevent compression of insulation. Refer to Section 220529, HANGERS AND SUPPORTS FOR PLUMBING PIPING AND EQUIPMENT.

3.2.4.8 Except as noted cover valves, flanges, fittings and similar items in each piping system with equivalent thickness and composition of insulation as applied to adjoining pipe run.

3.2.4.8.1 Install factory-molded, pre-cut or job-fabricated units (at Installer's option), except where a specific form or type is indicated.

3.2.4.8.2 Do not cover:

3.2.4.8.2.1 Valve operators.

3.2.4.8.2.2 Threaded or solder joint strainers.

3.2.4.8.2.3 Balancing valves.

3.2.4.9 Mark location of unions and flanges covered by insulation with permanent paint or ink, or approved label.

3.2.4.10 Maintain integrity of vapor-barrier jackets on insulation of storm drainage piping, and protect to prevent puncture or other damage.

3.2.4.11 Insulate between pipe and pipe saddles. Provide suitable saddles.

3.2.4.12 Seal Ends of Sections with Vapor Barrier Cement At:

3.2.4.12.1 21 ft. intervals.

3.2.4.12.2 Valves and fittings.

3.2.4.13 On underground pipe insulation, install unicellular insulation on pipe without slitting insulation. Seal all transverse joints with adhesive.

3.2.4.14 Replace existing insulation removed or damaged because of work of this project.

3.2.4.15 Insulate new pipes and replace insulation on existing pipes to remain where insulation was removed or damaged by demolition or revisions.

3.2.4.16 Perform all work in a neat and workmanlike manner. Improper work will be cause for rejection.

3.3 OUTDOOR PIPE INSULATION

3.3.1 Install rigid closed cell insulation with butt joints of half pipe sections staggered. Insulation shall be held in place with strapping tape. Install aluminum jacket with all joints lapped to shed water. Apply a bead of silicone sealant at all transverse and longitudinal seams. Secure with aluminum bands, minimum of 2 per jacket section.

3.4 EQUIPMENT INSULATION

3.4.1 Install insulation materials with smooth and even surfaces and on clean and dry surfaces.

3.4.1.1 Re-do poorly fitted joints.

3.4.1.2 Do not use mastic or joint sealer as filler for gaping joints and excessive voids resulting from poor workmanship.

3.4.2 Maintain integrity of vapor-barrier on equipment insulation and protect it to prevent puncture and other damage.

3.4.3 Apply insulation using the staggered joint method for both single and double layer construction, where feasible.

3.4.3.1 Provide neatly beveled edge at interruptions of insulation.

3.4.4 Domestic Water Tanks:

3.4.4.1 Insulate domestic hot water tanks with 2 inches of pipe and tank insulation or 1½ inches of rigid fiberglass board (if not originally insulated from the factory).

3.5 PROTECTION AND REPLACEMENT

3.5.1 Replace damaged insulation, which cannot be repaired satisfactorily, including units with vapor barrier damage and moisture saturation.

3.5.2 Protection: The insulation installer shall advise the Contractor of the required protection for the insulation work during the remainder of the construction period, to avoid damage and deterioration.

3.5.3 Any fiber insulation product which becomes wetted is to be removed from the job site and disposed of properly.

END OF SECTION 22 07 00

SECTION 22 11 16 - DOMESTIC WATER PIPING

PART 1 - GENERAL

SCHEDULE 1 - RELATED DOCUMENTS:

PRODUCT DATA SHEET 1 - Drawings and general provisions of the Contract, including General and Supplementary Conditions and Division 1 Specification Sections, apply to this Section.

SCHEDULE 2 - SUMMARY:

PRODUCT DATA SHEET 1 - This Section includes domestic water piping inside the building.

PRODUCT DATA SHEET 2 - Related Sections include the following:

1.1 Division 33 Section "Water Distribution" for water-service piping and water meters outside the building from source to the point where water-service piping enters the building..

SCHEDULE 3 - PERFORMANCE REQUIREMENTS:

PRODUCT DATA SHEET 1 - Provide components and installation capable of producing domestic water piping systems with 125 psig (860 kPa), unless otherwise indicated.

SCHEDULE 4 - SUBMITTALS:

PRODUCT DATA SHEET 1 - Product Data: For pipe, tube, fittings, and couplings.

PRODUCT DATA SHEET 2 - Water Samples: Specified in Part 3 "Cleaning" Article.

PRODUCT DATA SHEET 3 - Field quality-control test reports.

SCHEDULE 5 - QUALITY ASSURANCE:

PRODUCT DATA SHEET 1 - Piping materials shall bear label, stamp, or other markings of specified testing agency.

PRODUCT DATA SHEET 2 - Comply with NSF 61, "Drinking Water System Components - Health Effects; Sections 1 through 9," for potable domestic water piping and components.

PART 2 - PRODUCTS

SCHEDULE 1 - MANUFACTURERS:

PRODUCT DATA SHEET 1 - In other Part 2 articles where titles below introduce lists, the following requirements apply to product selection:

2.1 Available Manufacturers: Subject to compliance with requirements, manufacturers offering products that may be incorporated into the Work include, but are not limited to, manufacturers specified.

SCHEDULE 2 - PIPING MATERIALS:

PRODUCT DATA SHEET 1 - Refer to Section 3.2 "Pipe and Fitting Applications" for applications of pipe, tube, fitting, and joining materials.

PRODUCT DATA SHEET 2 - Transition Couplings for Aboveground Pressure Piping: Coupling or other manufactured fitting the same size as, with pressure rating at least equal to and ends compatible with, piping to be joined.

SCHEDULE 3 - COPPER TUBE AND FITTINGS:

PRODUCT DATA SHEET 1 - Soft Copper Tube: ASTM B 88, Types K and L (ASTM B 88M, Types A and B), water tube, annealed temper.

2.1 Copper Pressure Fittings: ASME B16.18, cast-copper-alloy or ASME B16.22, wrought-copper, solder-joint fittings. Furnish wrought-copper fittings if indicated.

2.2 Bronze Flanges: ASME B16.24, Class 150, with solder-joint ends. Furnish Class 300 flanges if required to match piping.

2.3 Copper Unions: MSS SP-123, cast-copper-alloy, hexagonal-stock body, with ball-and-socket, metal-to-metal seating surfaces, and solder-joint or threaded ends.

PRODUCT DATA SHEET 2 - Hard Copper Tube: ASTM B 88, Types L and M, water tube, drawn temper.

2.1 Copper Pressure Fittings: ASME B16.18, cast-copper-alloy or ASME B16.22, wrought-copper, solder-joint fittings. Furnish wrought-copper fittings if indicated.

2.2 Bronze Flanges: ASME B16.24, Class 150, with solder-joint ends. Furnish Class 300 flanges if required to match piping.

2.3 Copper Unions: MSS SP-123, cast-copper-alloy, hexagonal-stock body, with ball-and-socket, metal-to-metal seating surfaces, and solder-joint or threaded ends.

SCHEDULE 4 - VALVES:

PRODUCT DATA SHEET 1 - Bronze and cast-iron, general-duty valves are specified in Division 22 Section "General Duty Valves for Plumbing Piping”.

PRODUCT DATA SHEET 2 - Balancing and drain valves are specified in Division 22 Section "Domestic Water Piping Specialties”.

PART 3 - EXECUTION

SCHEDULE 1 - EXCAVATION:

PRODUCT DATA SHEET 1 - Excavating, trenching, and backfilling are specified in Division 31 Section "Earthwork."

SCHEDULE 2 - PIPE AND FITTING APPLICATIONS:

PRODUCT DATA SHEET 1 - Transition and special fittings with pressure ratings at least equal to piping rating may be used in applications below, unless otherwise indicated.

PRODUCT DATA SHEET 2 - Flanges may be used on aboveground piping, unless otherwise indicated.

PRODUCT DATA SHEET 3 - Fitting Option: Extruded-tee connections and brazed joints may be used on aboveground copper tubing.

PRODUCT DATA SHEET 4 - Under-Building-Slab, Water-Service Piping on Service Side and house side of Water Meter: Refer to Division 2 Section "Water Distribution."

PRODUCT DATA SHEET 5 - Aboveground Domestic Water Piping: Use the following piping materials for each size range:

3.1 NPS 1 (DN 25) and Smaller: Hard copper tube, Type L (Type B); copper pressure fittings; and soldered joints.

3.2 NPS 1-1/4 and NPS 1-1/2 (DN 32 and DN 40): Hard copper tube, Type L (Type B); copper pressure fittings; and soldered joints.

3.3 NPS 2 (DN 50): Hard copper tube, Type L (Type B); copper pressure fittings; and soldered joints.

3.4 NPS 4 to NPS 6 (DN 100 to DN 150): Hard copper tube, Type L (Type B); copper pressure fittings; and soldered joints.

PRODUCT DATA SHEET 6 - Non-Potable-Water Piping: Use the following piping materials for each size range:

3.1 NPS 3-1/2 (DN 90) and Smaller: Hard copper tube, Type L (Type B); copper pressure fittings; and soldered joints.

SCHEDULE 3 - VALVE APPLICATIONS:

PRODUCT DATA SHEET 0 - Drawings do not indicate valve types to be used, the following requirements apply:

3.1 Shutoff Duty: Use bronze ball valves for piping NPS 2 (DN 50) and smaller. Use cast-iron butterfly valves with flanged ends for piping NPS 2-1/2 (DN 65) and larger.

3.2 Throttling Duty: Use bronze ball for piping NPS 2 (DN 50) and smaller.

3.3 Hot-Water-Piping, Balancing Duty: Memory-stop balancing valves.

3.4 Drain Duty: Hose-end drain valves.

PRODUCT DATA SHEET 1 - Install shutoff valve close to water main on each branch and riser serving plumbing fixtures or equipment, on each water supply to equipment, and on each water supply to plumbing fixtures that do not have supply stops. Use ball or gate valves for piping NPS 2 (DN 50) and smaller. Use butterfly or gate valves for piping NPS 2-1/2 (DN 65) and larger.

PRODUCT DATA SHEET 2 - Install drain valves for equipment at base of each water riser, at low points in horizontal piping, and where required to drain water piping.

3.1 Install hose-end drain valves at low points in water mains, risers, and branches.

3.2 Install stop-and-waste drain valves where indicated.

PRODUCT DATA SHEET 3 - Install balancing valve in each hot-water circulation return branch and discharge side of each pump and circulator. Set balancing valves partly open to restrict but not stop flow. Use ball valves with memory stop. Balancing valves are specified in Division 22 Section "Domestic Water Plumbing Specialties."

SCHEDULE 4 - PIPING INSTALLATION:

PRODUCT DATA SHEET 0 - Basic piping installation requirements are specified in Division 22 Section "Basic Materials and Methods."

PRODUCT DATA SHEET 1 - Install under-building-slab copper tubing according to CDA's "Copper Tube Handbook."

PRODUCT DATA SHEET 2 - Install shutoff valve, hose-end drain valve, strainer, pressure gage, and test tee with valve, inside the building at each domestic water service entrance. Pressure gages are specified in Division 22 Section "Meters and Gages," and drain valves and strainers are specified in Division 22 Section "Plumbing Specialties."

PRODUCT DATA SHEET 3 - Install water-pressure regulators downstream from shutoff valves. Water-pressure regulators are specified in Division 22 Section "Domestic Water Piping Specialties".

PRODUCT DATA SHEET 4 - Install domestic water piping level and plumb.

SCHEDULE 5 - JOINT CONSTRUCTION:

PRODUCT DATA SHEET 0 - Basic piping joint construction requirements are specified in Division 22 Section "Basic Materials and Methods."

PRODUCT DATA SHEET 1 - Soldered Joints: Use ASTM B 813, water-flushable, lead-free flux; ASTM B 32, lead-free-alloy solder; and ASTM B 828 procedure, unless otherwise indicated.

SCHEDULE 6 - HANGER AND SUPPORT INSTALLATION:

PRODUCT DATA SHEET 0 - Seismic-restraint devices are specified in Division 23 Section "HVAC Vibration and Seismic Controls."

PRODUCT DATA SHEET 1 - Pipe hanger and support devices are specified in Division 22 Section "Hangers and Supports." Install the following:

3.1 Vertical Piping: MSS Type 8 or Type 42, clamps.

3.2 Individual, Straight, Horizontal Piping Runs: According to the following:

A. 100 Feet (30 m) and Less: MSS Type 1, adjustable, steel clevis hangers.

B. Longer Than 100 Feet (30 m): MSS Type 43, adjustable roller hangers.

C. Longer Than 100 Feet (30 m): MSS Type 49, spring cushion rolls, if indicated.

3.3 Multiple, Straight, Horizontal Piping Runs 100 Feet (30 m) or Longer: MSS Type 44, pipe rolls. Support pipe rolls on trapeze.

3.4 Base of Vertical Piping: MSS Type 52, spring hangers.

PRODUCT DATA SHEET 2 - Install supports according to Division 22 Section "Hangers and Supports."

PRODUCT DATA SHEET 3 - Support vertical piping and tubing at base and at each floor.

PRODUCT DATA SHEET 4 - Rod diameter may be reduced 1 size for double-rod hangers, to a minimum of 3/8 inch (10 mm).

PRODUCT DATA SHEET 5 - Install hangers for copper tubing with the following maximum horizontal spacing and minimum rod diameters:

3.1 NPS 3/4 (DN 20) and Smaller: 60 inches (1500 mm) with 3/8-inch (10-mm) rod.

3.2 NPS 1 and NPS 1-1/4 (DN 25 and DN 32): 72 inches (1800 mm) with 3/8-inch (10-mm) rod.

3.3 NPS 1-1/2 and NPS 2 (DN 40 and DN 50): 96 inches (2400 mm) with 3/8-inch (10-mm) rod.

3.4 NPS 2-1/2 (DN 65): 108 inches (2700 mm) with 1/2-inch (13-mm) rod.

3.5 NPS 3 to NPS 5 (DN 80 to DN 125): 10 feet (3 m) with 1/2-inch (13-mm) rod.

3.6 NPS 6 (DN 150): 10 feet (3 m) with 5/8-inch (16-mm) rod.

3.7 NPS 8 (DN 200): 10 feet (3 m) with 3/4-inch (19-mm) rod.

PRODUCT DATA SHEET 6 - Install supports for vertical copper tubing every 10 feet (3 m).

PRODUCT DATA SHEET 7 - Support piping and tubing not listed above according to MSS SP-69 and manufacturer's written instructions.

SCHEDULE 7 - CONNECTIONS:

PRODUCT DATA SHEET 0 - Drawings indicate general arrangement of piping, fittings, and specialties.

PRODUCT DATA SHEET 1 - Install piping adjacent to equipment and machines to allow service and maintenance.

PRODUCT DATA SHEET 2 - Connect domestic water piping to exterior water-service piping. Use transition fitting to join dissimilar piping materials.

PRODUCT DATA SHEET 3 - Connect domestic water piping to water-service piping with shutoff valve, and extend and connect to the following:

3.1 Water Heaters: Cold-water supply and hot-water outlet piping in sizes indicated, but not smaller than sizes of water heater connections.

3.2 Plumbing Fixtures: Cold- and hot-water supply piping in sizes indicated, but not smaller than required by plumbing code. Refer to Division 22 Section "Plumbing Fixtures."

3.3 Equipment: Cold- and hot-water supply piping as indicated, but not smaller than equipment connections. Provide shutoff valve, water hammer arresters at all quick-closing valves and union for each connection. Use flanges instead of unions for NPS 2-1/2 (DN 65) and larger.

SCHEDULE 8 - FIELD QUALITY CONTROL:

PRODUCT DATA SHEET 0 - Inspect domestic water piping as follows:

3.1 Do not enclose, cover, or put piping into operation until it has been inspected and approved by authorities having jurisdiction.

3.2 During installation, notify authorities having jurisdiction at least 24 hours before inspection must be made. Perform tests specified below in presence of authorities having jurisdiction:

A. Roughing-in Inspection: Arrange for inspection of piping before concealing or closing-in after roughing-in and before setting fixtures.

B. Final Inspection: Arrange final inspection for authorities having jurisdiction to observe tests specified below and to ensure compliance with requirements.

3.3 Re-inspection: If authorities having jurisdiction find that piping will not pass test or inspection, make required corrections and arrange for re-inspection.

3.4 Reports: Prepare inspection reports and have them signed by authorities having jurisdiction.

3.5 Should the pipes be concealed or covered before inspection the Contractor shall uncover piping for inspection and testing purposes, at no cost to the Owner.

PRODUCT DATA SHEET 1 - Test domestic water piping as follows:

3.1 Fill domestic water piping. Check components to determine that they are not air bound and that piping is full of water.

3.2 Test for leaks and defects in new piping and parts of existing piping that have been altered, extended, or repaired. If testing is performed in segments, submit separate report for each test, complete with diagram of portion of piping tested.

3.3 Leave new, altered, extended, or replaced domestic water piping uncovered and unconcealed until it has been tested and approved. Expose work that was covered or concealed before it was tested.

3.4 Cap and subject piping to static water pressure of 50 psig (345 kPa) above operating pressure, without exceeding pressure rating of piping system materials. Isolate test source and allow to stand for four hours. Leaks and loss in test pressure constitute defects that must be repaired.

3.5 Repair leaks and defects with new materials and retest piping or portion thereof until satisfactory results are obtained.

3.6 Prepare reports for tests and required corrective action.

SCHEDULE 9 - ADJUSTING:

PRODUCT DATA SHEET 0 - Perform the following adjustments before operation:

3.1 Close drain valves, hydrants, and hose bibbs.

3.2 Open shutoff valves to fully open position.

3.3 Open throttling valves to proper setting.

3.4 Adjust balancing valves in hot-water-circulation return piping to provide adequate flow.

A. Manually adjust ball-type balancing valves in hot-water-circulation return piping to provide flow of hot water in each branch.

3.5 Remove plugs used during testing of piping and plugs used for temporary sealing of piping during installation.

3.6 Remove and clean strainer screens. Close drain valves and replace drain plugs.

3.7 Remove filter cartridges from housings and verify that cartridges are as specified for application where used and are clean and ready for use.

3.8 Check plumbing specialties and verify proper settings, adjustments, and operation.

SCHEDULE 10 - CLEANING:

PRODUCT DATA SHEET 0 - Clean and disinfect potable domestic water piping as follows:

3.1 Purge new piping and parts of existing domestic water piping that have been altered, extended, or repaired before using.

3.2 Use purging and disinfecting procedures prescribed by authorities having jurisdiction or, if methods are not prescribed, procedures described in either AWWA C651 or AWWA C652 or as described below:

A. Flush piping system with clean, potable water until dirty water does not appear at outlets.

B. Fill and isolate system according to either of the following:

1. Fill system or part thereof with water/chlorine solution with at least 50 ppm (50 mg/L) of chlorine. Isolate with valves and allow to stand for 24 hours.

2. Fill system or part thereof with water/chlorine solution with at least 200 ppm (200 mg/L) of chlorine. Isolate and allow to stand for three hours.

C. Flush system with clean, potable water until no chlorine is in water coming from system after the standing time.

D. Submit water samples in sterile bottles to authorities having jurisdiction. Repeat procedures if biological examination shows contamination.

PRODUCT DATA SHEET 1 - Prepare and submit reports of purging and disinfecting activities.

PRODUCT DATA SHEET 2 - Clean interior of domestic water piping system. Remove dirt and debris as work progresses.

END OF SECTION 22 11 16

SECTION 22 11 19 - DOMESTIC WATER PIPING SPECIALTIES

PART 1 - GENERAL

SCHEDULE 1 - RELATED DOCUMENTS:

PRODUCT DATA SHEET 1 - Drawings and general provisions of the Contract, including General and Supplementary Conditions and Division 1 Specification Sections, apply to this Section.

SCHEDULE 2 - SUMMARY:

PRODUCT DATA SHEET 1 - This Section includes the following domestic water piping specialties:

1.1 Vacuum breakers.

1.2 Water pressure-reducing valves.

1.3 Strainers.

1.4 Hose bibbs.

1.5 Washer box.

1.6 Ice maker box.

1.7 Drain valves.

1.8 Water hammer arresters.

1.9 Trap-seal primer valves.

1.10 Pressure Gauges

1.11 Thermometers

PRODUCT DATA SHEET 2 - Related Sections include the following:

1.1 Division 22 Section "Meters and Gages" for thermometers, pressure gages, and flow meters in domestic water piping.

1.2 Division 22 Section "Domestic Water Piping" for water meters.

SCHEDULE 3 - PERFORMANCE REQUIREMENTS:

PRODUCT DATA SHEET 1 - Minimum Working Pressure for Domestic Water Piping Specialties: 125 psig (860 kPa), unless otherwise indicated.

SCHEDULE 4 - SUBMITTALS:

PRODUCT DATA SHEET 1 - Product Data: For each type of product indicated.

PRODUCT DATA SHEET 2 - Shop Drawings: Diagram power, signal, and control wiring.

PRODUCT DATA SHEET 3 - Field quality-control test reports.

PRODUCT DATA SHEET 4 - Operation and Maintenance Data: For domestic water piping specialties to include in emergency, operation, and maintenance manuals.

SCHEDULE 5 - QUALITY ASSURANCE:

PRODUCT DATA SHEET 1 - Electrical Components, Devices, and Accessories: Listed and labeled as defined in NFPA 70, Article 100, by a testing agency acceptable to authorities having jurisdiction, and marked for intended use.

PRODUCT DATA SHEET 2 - NSF Compliance:

1.1 Comply with NSF 61, "Drinking Water System Components - Health Effects; Sections 1 through 9."

PART 2 - PRODUCTS

SCHEDULE 1 - VACUUM BREAKERS:

PRODUCT DATA SHEET 1 - Pipe-Applied, Atmospheric-Type Vacuum Breakers:

2.1 Manufacturers: Subject to compliance with requirements, provide products by one of the following:

A. Ames Co.

B. Cash Acme.

C. Conbraco Industries, Inc.

D. FEBCO; SPX Valves & Controls.

E. Rain Bird Corporation.

F. Toro Company (The); Irrigation Div.

G. Watts Industries, Inc.; Water Products Div.

H. Zurn Plumbing Products Group; Wilkins Div.

2.2 Standard: ASSE 1001.

2.3 Size: NPS 1/4 to NPS 3 (DN 8 to DN 80), as required to match connected piping.

2.4 Body: Bronze.

2.5 Inlet and Outlet Connections: Threaded.

2.6 Finish: Chrome plated.

PRODUCT DATA SHEET 2 - Hose-Connection Vacuum Breakers:

2.1 Manufacturers: Subject to compliance with requirements, provide products by one of the following:

A. Arrowhead Brass Products, Inc.

B. Cash Acme.

C. Conbraco Industries, Inc.

D. Legend Valve.

E. MIFAB, Inc.

F. Prier Products, Inc.

G. Watts Industries, Inc.; Water Products Div.

H. Woodford Manufacturing Company.

I. Zurn Plumbing Products Group; Light Commercial Operation.

J. Zurn Plumbing Products Group; Wilkins Div.

2.2 Standard: ASSE 1011.

2.3 Body: Bronze, non-removable, with manual drain.

2.4 Outlet Connection: Garden-hose threaded complying with ASME B1.20.7.

2.5 Finish: Chrome or nickel plated.

SCHEDULE 2 - WATER PRESSURE-REDUCING VALVES:

PRODUCT DATA SHEET 1 - Water Regulator PRV-1:

2.1 Manufacturers: Subject to compliance with requirements, provide products by one of the following:

A. Cash Acme.

B. Conbraco Industries, Inc.

C. Honeywell Water Controls.

D. Watts Industries, Inc.; Water Products Div.

E. Zurn Plumbing Products Group; Wilkins Div.

2.2 Standard: ASSE 1003.

2.3 Pressure Rating: Initial working pressure of 150 psig (1035 kPa).

2.4 Size: See Sheet P0.1 Equipment Schedule.

2.5 Design Flow Rate: 60 GPM.

2.6 Design Inlet Pressure: 129 PSI.

2.7 Design Outlet Pressure Setting: 70 PSIG

2.8 Body: Bronze with chrome-plated finish for NPS 2 (DN 50) and smaller; cast iron for NPS 2-1/2 and NPS 3 (DN 65 and DN 80).

2.9 End Connections: Threaded for NPS 2 (DN 50) and smaller.

2.10 See Equipment Schedule Sheet P0.1 for sizes and capacities.

SCHEDULE 3 - STRAINERS FOR DOMESTIC WATER PIPING:

PRODUCT DATA SHEET 1 - Y-Pattern Strainers:

2.1 Pressure Rating: 125 psig (860 kPa) minimum, unless otherwise indicated.

2.2 Body: Bronze for NPS 2 (DN 50) and smaller.

2.3 End Connections: Threaded for NPS 2 (DN 50) and smaller.

2.4 Screen: Stainless steel with round perforations, unless otherwise indicated.

2.5 Perforation Size:

A. Strainers NPS 2 (DN 50) and Smaller: 0.020 inch (0.51 mm).

2.6 Drain: Pipe plug or Factory-installed, hose-end drain valve.

SCHEDULE 4 - HOSE BIBBS:

PRODUCT DATA SHEET 1 - Hose Bibbs:

2.1 Standard: ASME A112.18.1 for sediment faucets.

2.2 Body Material: Bronze.

2.3 Seat: Bronze, replaceable.

2.4 Supply Connections: NPS 1/2 or NPS 3/4 (DN 15 or DN 20) threaded or solder-joint inlet.

2.5 Outlet Connection: Garden-hose thread complying with ASME B1.20.7.

2.6 Pressure Rating: 125 psig (860 kPa).

2.7 Vacuum Breaker: Integral non-removable, drainable, hose-connection vacuum breaker complying with ASSE 1011.

2.8 Finish for Equipment Rooms: Rough bronze, or chrome or nickel plated.

2.9 Finish for Service Areas: Rough bronze.

2.10 Finish for Finished Rooms: Chrome or nickel plated.

2.11 Operation for Equipment Rooms: Wheel handle or operating key.

2.12 Operation for Service Areas: Wheel handle.

2.13 Operation for Finished Rooms: Wheel handle.

2.14 Include operating key with each operating-key hose bibb.

2.15 Include integral wall flange with each chrome- or nickel-plated hose bibb.

PRODUCT DATA SHEET 2 - HB-1 Lead-free bent nose with flange sillcock type hose bibb for interior use with backflow preventer and removeable key handle.

PRODUCT DATA SHEET 3 - HB-2 Lead-free, hot and cold water hose bibb in box for exterior use with backflow preventer. Valve shall be cartridge operated type with vandal resistant lockshield, removable loose key wheel handle and screwdriver operated stop. Box shall be 18 gauge type 304 stainless steel with satin finish. Door shall be 16 gauge satin finish with removable hinge and cylinder lock.

PRODUCT DATA SHEET 4 - HB-3 Lead-free, cold water hose bibb in box for exterior use with backflow preventer. Valve shall be cartridge operated type with vandal resistant lockshield, removable loose key wheel handle and screwdriver operated stop. Box shall be 18 gauge type 304 stainless steel with satin finish. Door shall be 16 gauge satin finish with removable hinge and cylinder lock.

SCHEDULE 5 - CLOTHES WASHER OUTLET BOX:

PRODUCT DATA SHEET 1 - Manufacturers: Subject to compliance with requirements, provide products by one of the following:

2.1 Acorn Engineering Company.

2.2 Guy Gray Manufacturing Co., Inc.

2.3 IPS Corporation.

2.4 LSP Products Group, Inc.

2.5 Oatey.

2.6 Plastic Oddities; a division of Diverse Corporate Technologies.

2.7 Symmons Industries, Inc.

2.8 Watts Industries, Inc.; Water Products Div.

2.9 Whitehall Manufacturing; a div. of Acorn Engineering Company.

2.10 Zurn Plumbing Products Group; Light Commercial Operation.

PRODUCT DATA SHEET 2 - Mounting: Recessed.

PRODUCT DATA SHEET 3 - Material and Finish: Stainless-steel box.

PRODUCT DATA SHEET 4 - Faucet: Combination, valved fitting or separate hot- and cold-water, valved fittings complying with ASME A112.18.1. Include garden-hose thread complying with ASME B1.20.7 on outlets.

PRODUCT DATA SHEET 5 - Supply Shutoff Fittings: NPS 1/2 (DN 15) gate, globe, or ball valves and NPS 1/2 (DN 15) copper, water tubing.

PRODUCT DATA SHEET 6 - Drain: NPS 2 (DN 50) standpipe and P-trap for direct waste connection to drainage piping.

PRODUCT DATA SHEET 7 - Provide water hammer arresters.

PRODUCT DATA SHEET 8 - Description: WB-1: Lead-free, 2" waste, hot and cold water washer box . Valve shall be cartridge operated type with vandal resistant lockshield, removable loose key wheel handle and screwdriver operated stop. Box shall be 18 gauge type 304 stainless steel with satin finish.

SCHEDULE 6 - ICE MAKER BOX:

PRODUCT DATA SHEET 1 - Manufacturers: Subject to compliance with requirements, provide products by one of the following:

2.1 Acorn Engineering Company.

2.2 Guy Gray Manufacturing Co., Inc.

2.3 IPS Corporation.

2.4 LSP Products Group, Inc.

2.5 Oatey.

2.6 Plastic Oddities; a division of Diverse Corporate Technologies.

2.7 Symmons Industries, Inc.

2.8 Watts Industries, Inc.; Water Products Div.

2.9 Whitehall Manufacturing; a div. of Acorn Engineering Company.

2.10 Zurn Plumbing Products Group; Light Commercial Operation.

PRODUCT DATA SHEET 2 - Mounting: Recessed.

PRODUCT DATA SHEET 3 - Material and Finish: 20 gauge steel with powder coat finish.

PRODUCT DATA SHEET 4 - Faucet: Combination, valved fitting or separate hot- and cold-water, valved fittings complying with ASME A112.18.1. Include garden-hose thread complying with ASME B1.20.7 on outlets.

PRODUCT DATA SHEET 5 - Supply Shutoff Fittings: NPS 1/2 (DN 15) gate, globe, or ball valves and NPS 1/2 (DN 15) copper, water tubing.

PRODUCT DATA SHEET 6 - Description: IB-1: Lead-free recessed icemaker box . 20 gauge steel box with 28 gauge steel faceplate, powder coat finish, with valve, water hammer arrestor.

SCHEDULE 7 - DRAIN VALVES:

PRODUCT DATA SHEET 0 - Ball-Valve-Type, Hose-End Drain Valves:

2.1 Standard: MSS SP-110 for standard-port, two-piece ball valves.

2.2 Pressure Rating: 400-psig (2760-kPa) minimum CWP.

2.3 Size: NPS 3/4 (DN 20).

2.4 Body: Copper alloy.

2.5 Ball: Chrome-plated brass.

2.6 Seats and Seals: Replaceable.

2.7 Handle: Vinyl-covered steel.

2.8 Inlet: Threaded or solder joint.

2.9 Outlet: Threaded, short nipple with garden-hose thread complying with ASME B1.20.7 and cap with brass chain.

SCHEDULE 8 - WATER HAMMER ARRESTERS:

PRODUCT DATA SHEET 1 - Water Hammer Arresters:

2.1 Manufacturers: Subject to compliance with requirements, provide products by one of the following:

A. AMTROL, Inc.

B. Josam Company.

C. MIFAB, Inc.

D. PPP Inc.

E. Sioux Chief Manufacturing Company, Inc.

F. Smith, Jay R. Mfg. Co.; Division of Smith Industries, Inc.

G. Tyler Pipe; Wade Div.

H. Watts Drainage Products Inc.

I. Zurn Plumbing Products Group; Specification Drainage Operation.

2.2 Standard: ASSE 1010 or PDI-WH 201.

2.3 Type: Copper tube with piston.

2.4 Size: ASSE 1010, Sizes AA and A through F or PDI-WH 201, Sizes A through F.

SCHEDULE 9 - TRAP-SEAL PRIMER VALVES:

PRODUCT DATA SHEET 1 - Supply-Type, Trap-Seal Primer Valves, TP-1:

2.1 Manufacturers: Subject to compliance with requirements, provide products by one of the following:

A. MIFAB, Inc.

B. PPP Inc.

C. Sioux Chief Manufacturing Company, Inc.

D. Smith, Jay R. Mfg. Co.; Division of Smith Industries, Inc.

E. Watts Industries, Inc.; Water Products Div.

2.2 Standard: ASSE 1018.

2.3 Pressure Rating: 125 psig (860 kPa) minimum.

2.4 Body: Bronze.

2.5 Inlet and Outlet Connections: NPS 1/2 (DN 15) threaded, union, or solder joint.

2.6 Gravity Drain Outlet Connection: NPS 1/2 (DN 15) threaded or solder joint.

2.7 Finish: Chrome plated, or rough bronze for units used with pipe or tube that is not chrome finished.

SCHEDULE 10 - ELECTRIC TRAP-SEAL PRIMER:

PRODUCT DATA SHEET 1 - Supply-Type, Electric Trap-Seal Primer Valves:

2.1 Manufacturers: Subject to compliance with requirements, provide products by one of the following:

A. MIFAB, Inc.

B. PPP Inc.

C. Sioux Chief Manufacturing Company, Inc

D. Smith, Jay R. Mfg. Co.; Division of Smith Industries, Inc.

E. Watts Industries, Inc.; Water Products Div.

2.2 Standard: ASSE 1018.

2.3 Pressure Rating: 125 psig (860 kPa) minimum.

2.4 Body: Bronze.

2.5 Inlet and Outlet Connections: NPS 1/2 (DN 15) threaded, union, or solder joint.

2.6 Gravity Drain Outlet Connection: NPS 1/2 (DN 15) threaded or solder joint.

2.7 Finish: Chrome plated, or rough bronze for units used with pipe or tube that is not chrome finished.

2.8 Electric controls: 24-hour timer, solenoid valve, and manual switch for 120-V ac power.

SCHEDULE 11 - PRESSURE GAUGES

PRODUCT DATA SHEET 1 - Description: Stainless steel bourdon tube type, capillary bleeder, enclosed cast aluminum or steel case, double strength glass window with lever handle gauge cock and anti-vibration pressure snubbers. Accuracy plus or minus 1% full scale. Readings in psi and kPA.

PRODUCT DATA SHEET 2 - Manufacturer: Weiss, or equivalent by Trerice, Taylor, or Marsh Mastergauges.

PRODUCT DATA SHEET 3 - Dials: 4-1/2" diameter, white coated with black figures and graduations.

PRODUCT DATA SHEET 4 - Construct all moving parts of stainless steel. The gauge able to be recalibrated without losing its original accuracy.

SCHEDULE 12 - THERMOMETERS

PRODUCT DATA SHEET 1 - Description: Industrial, without plastic parts and with red reading mercury glass tube, 9" cast brass or extruded aluminum case, double strength glass window, 180° adjustable angle, steel bulb chamber, 3/4" brass extended separable socket. Readings in graduates of one degree in Fahrenheit and centigrade.

PRODUCT DATA SHEET 2 - Manufacturer: Weiss, or equivalent by Trerice, Taylor or Palmer.

PRODUCT DATA SHEET 3 - Range: 30°to 250°F

PRODUCT DATA SHEET 4 - Separable Sockets: Brass, 150 psi at 250°F, with 2-1/2" extension necks. Install vertically in horizontal runs of pipe.

PRODUCT DATA SHEET 5 - Thermometer Wells: Install in piping for all thermometers. Construct to withstand pressure, temperature and fluid in which installed with 2-1/2" extension necks. Install vertically in horizontal runs of pipe.

PART 3 - EXECUTION

SCHEDULE 6 - INSTALLATION:

PRODUCT DATA SHEET 1 - Refer to Division 22 Section "Basic Materials and Methods" for piping joining materials, joint construction, and basic installation requirements.

PRODUCT DATA SHEET 2 - Install backflow preventers in each water supply to mechanical equipment and systems and to other equipment and water systems that may be sources of contamination. Comply with authorities having jurisdiction.

3.1 Locate backflow preventers in same room as connected equipment or system.

3.2 Install drain for backflow preventers with atmospheric-vent drain connection with air-gap fitting, fixed air-gap fitting, or equivalent positive pipe separation of at least two pipe diameters in drain piping and pipe to floor drain. Locate air-gap device attached to or under backflow preventer. Simple air breaks are not acceptable for this application.

3.3 Do not install bypass piping around backflow preventers.

PRODUCT DATA SHEET 3 - Install water regulators with inlet and outlet shutoff valves. Install pressure gages on inlet and outlet.

PRODUCT DATA SHEET 4 - Install water control valves with inlet and outlet shutoff valves. Install pressure gages on inlet and outlet.

PRODUCT DATA SHEET 5 - Install pressure gages on suction and discharge of pumps.

PRODUCT DATA SHEET 6 - Install balancing valves in locations where they can easily be adjusted.

PRODUCT DATA SHEET 7 - Install Y-pattern strainers for water on supply side of each water pressure-reducing valve,.

PRODUCT DATA SHEET 8 - Install outlet boxes recessed in wall. Install 2-by-4-inch (38-by-89-mm) fire-retardant-treated-wood blocking wall reinforcement between studs. Fire-retardant-treated-wood blocking is specified in Division 6 Section "Rough Carpentry."

PRODUCT DATA SHEET 9 - Install water hammer arresters in water piping according to PDI-WH 201.

PRODUCT DATA SHEET 10 - Install supply-type, trap-seal primer valves with outlet piping pitched down toward drain trap a minimum of 1 percent, and connect to floor-drain body, trap, or inlet fitting. Adjust valve for proper flow.

SCHEDULE 7 - CONNECTIONS:

PRODUCT DATA SHEET 1 - Piping installation requirements are specified in other Division 22 Sections. Drawings indicate general arrangement of piping and specialties.

PRODUCT DATA SHEET 2 - Ground equipment according to Division 26 Section "Grounding and Bonding."

PRODUCT DATA SHEET 3 - Connect wiring according to Division 26 Section "Conductors and Cables."

SCHEDULE 8 - FIELD QUALITY CONTROL:

PRODUCT DATA SHEET 1 - Perform the following tests and prepare test reports:

PRODUCT DATA SHEET 2 - Remove and replace malfunctioning domestic water piping specialties and retest as specified above.

SCHEDULE 9 - ADJUSTING:

PRODUCT DATA SHEET 1 - Set field-adjustable pressure set points of water pressure-reducing valves.

PRODUCT DATA SHEET 2 - Set field-adjustable flow set points of balancing valves.

END OF SECTION 22 11 19

SECTION 22 13 16 - SANITARY WASTE AND VENT PIPING

PART 1 - GENERAL

SCHEDULE 1 - RELATED DOCUMENTS:

PRODUCT DATA SHEET 1 - Drawings and general provisions of the Contract, including General and Supplementary Conditions and Division 1 Specification Sections, apply to this Section.

SCHEDULE 2 - SUMMARY:

PRODUCT DATA SHEET 1 - This Section includes the following for storm and storm overflow, soil, waste, and vent piping inside the building:

1.1 Pipe, tube, and fittings.

1.2 Special pipe fittings.

1.3 Encasement for underground metal piping.

SCHEDULE 3 - DEFINITIONS:

PRODUCT DATA SHEET 1 - ABS: Acrylonitrile-butadiene-styrene plastic.

PRODUCT DATA SHEET 2 - EPDM: Ethylene-propylene-diene terpolymer rubber.

PRODUCT DATA SHEET 3 - LLDPE: Linear, low-density polyethylene plastic.

PRODUCT DATA SHEET 4 - NBR: Acrylonitrile-butadiene rubber.

PRODUCT DATA SHEET 5 - PE: Polyethylene plastic.

PRODUCT DATA SHEET 6 - PVC: Polyvinyl chloride plastic.

PRODUCT DATA SHEET 7 - TPE: Thermoplastic elastomer.

SCHEDULE 4 - PERFORMANCE REQUIREMENTS:

PRODUCT DATA SHEET 1 - Components and installation shall be capable of withstanding the following minimum working pressure, unless otherwise indicated:

1.1 Soil, Waste, and Vent Piping: 10-foot head of water (30 kPa).

PRODUCT DATA SHEET 2 - Seismic Performance: Soil, waste, and vent piping and support and installation shall be capable of withstanding the effects of seismic events determined according to ASCE 7, "Minimum Design Loads for Buildings and Other Structures." California Building Code latest edition.

SCHEDULE 5 - SUBMITTALS:

PRODUCT DATA SHEET 1 - Product Data: For pipe, tube, fittings, and couplings.

PRODUCT DATA SHEET 2 - Shop Drawings:

1.1 Design Calculations: Signed and sealed by a qualified professional engineer for selecting seismic restraints.

PRODUCT DATA SHEET 3 - Field quality-control inspection and test reports.

SCHEDULE 6 - QUALITY ASSURANCE:

PRODUCT DATA SHEET 1 - Piping materials shall bear label, stamp, or other markings of specified testing agency.

PART 2 - PRODUCTS

SCHEDULE 1 - MANUFACTURERS:

PRODUCT DATA SHEET 1 - In other Part 2 articles where titles below introduce lists, the following requirements apply to product selection:

2.1 Available Manufacturers: Subject to compliance with requirements, manufacturers offering products that may be incorporated into the Work include, but are not limited to, manufacturers specified.

SCHEDULE 2 - PIPING MATERIALS:

PRODUCT DATA SHEET 1 - Refer to Part 3 "Piping Applications" Article for applications of pipe, tube, fitting, and joining materials.

SCHEDULE 3 - HUB AND SPIGOT, CAST-IRON SOIL AND FITTINGS

PRODUCT DATA SHEET 1 - Pipe and Fittings: ASTM A 74, service class(es).

PRODUCT DATA SHEET 2 - Gaskets: ASTM C 564, rubber.

PRODUCT DATA SHEET 3 - Calking Materials: ASTM B 29, pure lead and oakum or hemp fiber.

SCHEDULE 4 - HUBLESS CAST-IRON SOIL PIPE AND FITTINGS:

PRODUCT DATA SHEET 1 - Pipe and Fittings: ASTM A 888 or CISPI 301.

PRODUCT DATA SHEET 2 - Kitchen sanitary piping shall be cast iron.

PRODUCT DATA SHEET 3 - Shielded Couplings: ASTM C 1277 assembly of metal shield or housing, corrosion-resistant fasteners, and rubber sleeve with integral, center pipe stop.

2.1 Standard, Shielded, Stainless-Steel Couplings: CISPI 310, with stainless-steel corrugated shield; stainless-steel bands and tightening devices; and ASTM C 564, rubber sleeve.

A. Manufacturers:

1. ANACO.

2. Fernco, Inc.

3. Ideal Div.; Stant Corp.

4. Mission Rubber Co.

5. Tyler Pipe; Soil Pipe Div.

SCHEDULE 5 - COPPER TUBE AND FITTINGS:

PRODUCT DATA SHEET 1 - Copper DWV Tube: ASTM B 306, drainage tube, drawn temper.

2.1 Copper Drainage Fittings: ASME B16.23, cast copper or ASME B16.29, wrought copper, solder-joint fittings.

PRODUCT DATA SHEET 2 - Hard Copper Tube: ASTM B 88, Types L and M (ASTM B 88M, Types B and C), water tube, drawn temper.

2.1 Copper Pressure Fittings: ASME B16.18, cast-copper-alloy or ASME B16.22, wrought-copper, solder-joint fittings. Furnish wrought-copper fittings if indicated.

2.2 Copper Flanges: ASME B16.24, Class 150, cast copper with solder-joint end.

2.3 Copper Unions: MSS SP-123, copper-alloy, hexagonal-stock body with ball-and-socket, metal-to-metal seating surfaces, and solder-joint or threaded ends.

PRODUCT DATA SHEET 3 - Soft Copper Tube: ASTM B 88, Type L (ASTM B 88M, Type B), water tube, annealed temper.

2.1 Copper Pressure Fittings: ASME B16.18, cast-copper-alloy or ASME B16.22, wrought-copper, solder-joint fittings. Furnish wrought-copper fittings if indicated.

SCHEDULE 6 - SPECIAL PIPE FITTINGS:

PRODUCT DATA SHEET 1 - Flexible, Nonpressure Pipe Couplings: Comply with ASTM C 1173, elastomeric, sleeve-type, reducing or transition pattern. Include shear ring, ends of same sizes as piping to be joined, and corrosion-resistant-metal tension band and tightening mechanism on each end.

2.1 Manufacturers:

A. Dallas Specialty & Mfg. Co.

B. Fernco, Inc.

C. Logan Clay Products Company (The).

D. Mission Rubber Co.

E. NDS, Inc.

F. Plastic Oddities, Inc.

2.2 Sleeve Materials:

A. For Cast-Iron Soil Pipes: ASTM C 564, rubber.

B. For Dissimilar Pipes: ASTM D 5926, PVC or other material compatible with pipe materials being joined.

PRODUCT DATA SHEET 2 - Shielded Non-pressure Pipe Couplings: ASTM C 1460, elastomeric or rubber sleeve with full-length, corrosion-resistant outer shield and corrosion-resistant-metal tension band and tightening mechanism on each end.

2.1 Manufacturers:

A. Cascade Waterworks Mfg. Co.

B. Mission Rubber Co.

PRODUCT DATA SHEET 3 - Rigid, Unshielded, Non-pressure Pipe Couplings: ASTM C 1461, sleeve-type reducing- or transition-type mechanical coupling molded from ASTM C 1440, TPE material with corrosion-resistant-metal tension band and tightening mechanism on each end.

2.1 Manufacturers:

A. ANACO.

PART 3 - EXECUTION

SCHEDULE 1 - EXCAVATION:

PRODUCT DATA SHEET 1 - Refer to Division 31 Section "Earthwork" for excavating, trenching, and backfilling.

SCHEDULE 2 - PIPING APPLICATIONS:

PRODUCT DATA SHEET 1 - Flanges and unions may be used on aboveground pressure piping, unless otherwise indicated.

PRODUCT DATA SHEET 2 - Aboveground, soil and waste piping NPS 4 (DN 100) and smaller shall be the following:

3.1 Hubless cast-iron soil pipe and fittings; standard, shielded, stainless-steel couplings; and hubless-coupling joints.

3.2 Copper DWV tube, copper drainage fittings, and soldered joints.

3.3 Dissimilar Pipe-Material Couplings: Flexible, nonpressure pipe couplings for joining dissimilar pipe materials with small difference in OD.

PRODUCT DATA SHEET 3 - Aboveground, vent piping NPS 4 (DN 100) and smaller shall be the following:

3.1 Hubless cast-iron soil pipe and fittings; standard, shielded, stainless-steel couplings; and hubless-coupling joints.

3.2 Copper DWV tube, copper drainage fittings, and soldered joints.

PRODUCT DATA SHEET 4 - Underground, soil, waste, and vent piping NPS 6 (DN 125) and smaller shall be the following:

3.1 Hubless cast-iron soil pipe and fittings; heavy-duty shielded, stainless-steel couplings; and hubless-coupling joints.

3.2 Service class, cast-iron soil piping; gaskets and gasketed joints.

3.3 Dissimilar Pipe-Material Couplings: Flexible, Rigid, unshielded, non-pressure pipe couplings for joining dissimilar pipe materials with small difference in OD.

PRODUCT DATA SHEET 5 - Aboveground storm drainage piping NPS 6 (DN 150) and smaller shall be any of the following:

3.1 Hubless cast-iron soil pipe and fittings; standard, shielded, stainless-steel couplings; and coupled joints.

3.2 Dissimilar Pipe-Material Couplings: Flexible, non-pressure pipe couplings for joining dissimilar pipe materials with small difference in OD.

PRODUCT DATA SHEET 6 - Underground, storm drainage piping shall be the following:

3.1 Hubless cast-iron soil pipe and fittings; standard, shielded, stainless-steel couplings; and coupled joints.

3.2 Dissimilar Pipe-Material Couplings: Flexible or shielded, non-pressure pipe couplings for joining dissimilar pipe materials with small difference on OD.

SCHEDULE 3 - PIPING INSTALLATION:

PRODUCT DATA SHEET 1 - Sanitary sewer piping outside the building is specified in Division 33 Section "Sanitary Sewerage."

PRODUCT DATA SHEET 2 - Basic piping installation requirements are specified in Division 22 Section "Basic Plumbing Requirements."

PRODUCT DATA SHEET 3 - Install seismic restraints on piping. Seismic-restraint devices are specified in Division 23 Section "Mechanical Vibration and Seismic Controls."

PRODUCT DATA SHEET 4 - Install cleanouts at grade and extend to where building sanitary drains connect to building sanitary sewers.

PRODUCT DATA SHEET 5 - Install cast-iron soil piping according to CISPI's "Cast Iron Soil Pipe and Fittings Handbook," Chapter IV, "Installation of Cast Iron Soil Pipe and Fittings."

3.1 Install encasement on underground piping according to ASTM A 674 or AWWA C105.

PRODUCT DATA SHEET 6 - Make changes in direction for soil and waste drainage and vent piping using appropriate branches, bends, and long-sweep bends. Sanitary tees and short-sweep 1/4 bends may be used on vertical stacks if change in direction of flow is from horizontal to vertical. Use long-turn, double Y-branch and 1/8-bend fittings if 2 fixtures are installed back to back or side by side with

common drain pipe. Straight tees, elbows, and crosses may be used on vent lines. Do not change direction of flow more than 90 degrees. Use proper size of standard increasers and reducers if pipes of different sizes are connected. Reducing size of drainage piping in direction of flow is prohibited.

PRODUCT DATA SHEET 7 - Lay buried building drainage piping beginning at low point of each system. Install true to grades and alignment indicated, with unbroken continuity of invert. Place hub ends of piping upstream. Install required gaskets according to manufacturer's written instructions for use of lubricants, cements, and other installation requirements. Maintain swab in piping and pull past each joint as completed.

PRODUCT DATA SHEET 8 - Install piping at the following minimum slopes, unless otherwise indicated:

3.1 Building Sanitary Drain: 2 percent downward in direction of flow for piping NPS 3 (DN 80) and smaller; 1 percent downward in direction of flow for piping NPS 4 (DN 100) and larger.

3.2 Horizontal Sanitary Drainage Piping: piping sized 3" and under slope 2 percent downward in direction of flow, piping sized 4" and larger slope 1 percent downward in direction of flow.

3.3 Vent Piping: 1 percent down toward vertical fixture vent or toward vent stack.

3.4 Storm and overflow piping: slope per indications on plan.

PRODUCT DATA SHEET 9 - Sleeves are not required for cast-iron soil piping passing through concrete slabs-on-grade if slab is without membrane waterproofing.

PRODUCT DATA SHEET 10 - Do not enclose, cover, or put piping into operation until it is inspected and approved by authorities having jurisdiction.

PRODUCT DATA SHEET 11 - Should the pipes be concealed or covered before inspection the Contractor shall uncover piping for inspection and testing purposes, at no cost to the Owner.

SCHEDULE 4 - JOINT CONSTRUCTION:

PRODUCT DATA SHEET 1 - Basic piping joint construction requirements are specified in Division 22 Section "Basic Materials and Methods."

PRODUCT DATA SHEET 2 - Join hub-and-spigot, cast-iron soil piping with gasket joints according to CISPI's "Cast Iron Soil Pipe and Fittings Handbook" for compression joints.

PRODUCT DATA SHEET 3 - Join hubless cast-iron soil piping according to CISPI 310 and CISPI's "Cast Iron Soil Pipe and Fittings Handbook" for hubless-coupling joints.

PRODUCT DATA SHEET 4 - Soldered Joints: Use ASTM B 813, water-flushable, lead-free flux; ASTM B 32, lead-free-alloy solder; and ASTM B 828 procedure, unless otherwise indicated.

PRODUCT DATA SHEET 5 - PVC Non-pressure Piping Joints: Join piping according to ASTM D 2665.

SCHEDULE 5 - HANGER AND SUPPORT INSTALLATION:

PRODUCT DATA SHEET 1 - Seismic-restraint devices are specified in Division 23 Section "Mechanical Vibration Controls and Seismic Restraints."

PRODUCT DATA SHEET 2 - Pipe hangers and supports are specified in Division 22 Section "Hangers and Supports." Install the following:

3.1 Vertical Piping: MSS Type 8 or Type 42, clamps.

3.2 Install individual, straight, horizontal piping runs according to the following:

A. 100 Feet (30 m) and Less: MSS Type 1, adjustable, steel clevis hangers.

B. Longer Than 100 Feet (30 m): MSS Type 43, adjustable roller hangers.

C. Longer Than 100 Feet (30 m), if Indicated: MSS Type 49, spring cushion rolls.

3.3 Multiple, Straight, Horizontal Piping Runs 100 Feet (30 m) or Longer: MSS Type 44, pipe rolls. Support pipe rolls on trapeze.

3.4 Base of Vertical Piping: MSS Type 52, spring hangers.

PRODUCT DATA SHEET 3 - Install supports according to Division 22 Section "Hangers and Supports."

PRODUCT DATA SHEET 4 - Support vertical piping and tubing at base and at each floor.

PRODUCT DATA SHEET 5 - Rod diameter may be reduced 1 size for double-rod hangers, with 3/8-inch (10-mm) minimum rods.

PRODUCT DATA SHEET 6 - Install hangers for cast-iron soil piping with the following maximum horizontal spacing and minimum rod diameters:

3.1 NPS 1-1/2 and NPS 2 (DN 40 and DN 50): 60 inches (1500 mm) with 3/8-inch (10-mm) rod.

3.2 NPS 3 (DN 80): 60 inches (1500 mm) with 1/2-inch (13-mm) rod.

3.3 NPS 4 and NPS 5 (DN 100 and DN 125): 60 inches (1500 mm) with 5/8-inch (16-mm) rod.

3.4 NPS 6 (DN 150): 60 inches (1500 mm) with 3/4-inch (19-mm) rod.

3.5 NPS 8 to NPS 12 (DN 200 to DN 300): 60 inches (1500 mm) with 7/8-inch (22-mm) rod.

PRODUCT DATA SHEET 7 - Install supports for vertical cast-iron soil piping every 15 feet (4.5 m).

PRODUCT DATA SHEET 8 - Install hangers for copper tubing with the following maximum horizontal spacing and minimum rod diameters:

3.1 NPS 1-1/4 (DN 32): 72 inches (1800 mm) with 3/8-inch (10-mm) rod.

3.2 NPS 1-1/2 and NPS 2 (DN 40 and DN 50): 96 inches (2400 mm) with 3/8-inch (10-mm) rod.

3.3 NPS 2-1/2 (DN 65): 108 inches (2700 mm) with 1/2-inch (13-mm) rod.

3.4 NPS 3 to NPS 5 (DN 80 to DN 125): 10 feet (3 m) with 1/2-inch (13-mm) rod.

3.5 NPS 6 (DN 150): 10 feet (3 m) with 5/8-inch (16-mm) rod.

3.6 NPS 8 (DN 200): 10 feet (3 m) with 3/4-inch (19-mm) rod.

PRODUCT DATA SHEET 9 - Install supports for vertical copper tubing every 10 feet (3 m).

PRODUCT DATA SHEET 10 - Support piping and tubing not listed above according to MSS SP-69 and manufacturer's written instructions.

SCHEDULE 6 - CONNECTIONS:

PRODUCT DATA SHEET 1 - Drawings indicate general arrangement of piping, fittings, and specialties.

PRODUCT DATA SHEET 2 - Connect soil and waste piping to exterior sanitary sewerage piping. Use transition fitting to join dissimilar piping materials.

PRODUCT DATA SHEET 3 - Connect drainage and vent piping to the following:

3.1 Plumbing Fixtures: Connect drainage piping in sizes indicated, but not smaller than required by plumbing code.

3.2 Plumbing Fixtures and Equipment: Connect atmospheric vent piping in sizes indicated, but not smaller than required by authorities having jurisdiction.

3.3 Plumbing Specialties: Connect drainage and vent piping in sizes indicated, but not smaller than required by plumbing code.

3.4 Equipment: Connect drainage piping as indicated. Provide shutoff valve, if indicated, and union for each connection. Use flanges instead of unions for connections NPS 2-1/2 (DN 65) and larger.

SCHEDULE 7 - FIELD QUALITY CONTROL:

PRODUCT DATA SHEET 1 - During installation, notify authorities having jurisdiction at least 24 hours before inspection must be made. Perform tests specified below in presence of authorities having jurisdiction.

3.1 Roughing-in Inspection: Arrange for inspection of piping before concealing or closing-in after roughing-in and before setting fixtures.

3.2 Final Inspection: Arrange for final inspection by authorities having jurisdiction to observe tests specified below and to ensure compliance with requirements.

PRODUCT DATA SHEET 2 - Re-inspection: If authorities having jurisdiction find that piping will not pass test or inspection, make required corrections and arrange for re-inspection.

PRODUCT DATA SHEET 3 - Reports: Prepare inspection reports and have them signed by authorities having jurisdiction.

PRODUCT DATA SHEET 4 - Test sanitary drainage and vent piping according to procedures of authorities having jurisdiction or, in absence of published procedures, as follows:

3.1 Test for leaks and defects in new piping and parts of existing piping that have been altered, extended, or repaired. If testing is performed in segments, submit separate report for each test, complete with diagram of portion of piping tested.

3.2 Leave uncovered and unconcealed new, altered, extended, or replaced drainage and vent piping until it has been tested and approved. Expose work that was covered or concealed before it was tested.

3.3 Roughing-in Plumbing Test Procedure: Test drainage and vent piping, except outside leaders, on completion of roughing-in. Close openings in piping system and fill with water to point of overflow, but not less than 10-foot head of water (30 kPa). From 15 minutes before inspection starts to completion of inspection, water level must not drop. Inspect joints for leaks.

3.4 Finished Plumbing Test Procedure: After plumbing fixtures have been set and traps filled with water, test connections and prove they are gastight and watertight. Plug vent-stack openings on roof and building drains where they leave building. Introduce air into piping system equal to pressure of 1-inch wg (250 Pa). Use U-tube or manometer inserted in trap of water closet to measure this pressure. Air pressure must remain constant without introducing additional air throughout period of inspection. Inspect plumbing fixture connections for gas and water leaks.

3.5 Repair leaks and defects with new materials and retest piping, or portion thereof, until satisfactory results are obtained.

3.6 Prepare reports for tests and required corrective action.

SCHEDULE 8 - CLEANING:

PRODUCT DATA SHEET 1 - Clean interior of piping. Remove dirt and debris as work progresses.

PRODUCT DATA SHEET 2 - Protect drains during remainder of construction period to avoid clogging with dirt and debris and to prevent damage from traffic and construction work.

PRODUCT DATA SHEET 3 - Place plugs in ends of uncompleted piping at end of day and when work stops.

END OF SECTION 22 13 16

SECTION 22 13 19 - DRAINAGE PIPING SPECIALTIES

PART 1 - GENERAL

SCHEDULE 1 - RELATED DOCUMENTS:

PRODUCT DATA SHEET 1 - Drawings and general provisions of the Contract, including General and Supplementary Conditions and Division 1 Specification Sections, apply to this Section.

SCHEDULE 2 - SUMMARY:

PRODUCT DATA SHEET 1 - This Section includes the following drainage piping specialties:

1.1 Cleanouts.

1.2 Floor drains.

1.3 Floor sink.

1.4 Trench drain.

1.5 Roof drains and storm overflow drains.

1.6 Downspout nozzle.

1.7 Roof flashing assemblies.

1.8 Through-penetration firestop assemblies.

1.9 Miscellaneous drainage piping specialties.

1.10 Flashing materials.

SCHEDULE 3 - DEFINITIONS:

PRODUCT DATA SHEET 1 - ABS: Acrylonitrile-butadiene-styrene plastic.

PRODUCT DATA SHEET 2 - FRP: Fiberglass-reinforced plastic.

PRODUCT DATA SHEET 3 - HDPE: High-density polyethylene plastic.

PRODUCT DATA SHEET 4 - PE: Polyethylene plastic.

PRODUCT DATA SHEET 5 - PP: Polypropylene plastic.

PRODUCT DATA SHEET 6 - PUR: Polyurethane plastic.

PRODUCT DATA SHEET 7 - PVC: Polyvinyl chloride plastic.

SCHEDULE 4 - SUBMITTALS:

PRODUCT DATA SHEET 1 - Manufacturer Seismic Qualification Certification: Submit certification that grease interceptors, accessories, and components will withstand seismic forces defined in Division 23 Section "Mechanical Vibration and Seismic Controls." Include the following:

1.1 Basis for Certification: Indicate whether withstand certification is based on actual test of assembled components or on calculation.

A. The term "withstand" means "the unit will remain in place without separation of any parts from the device when subjected to the seismic forces specified."

B. The term "withstand" means "the unit will remain in place without separation of any parts from the device when subjected to the seismic forces specified and the unit will be fully operational after the seismic event."

1.2 Dimensioned Outline Drawings of Equipment Unit: Identify center of gravity and locate and describe mounting and anchorage provisions.

1.3 Detailed description of equipment anchorage devices on which the certification is based and their installation requirements.

PRODUCT DATA SHEET 2 - Field quality-control test reports.

PRODUCT DATA SHEET 3 - Operation and Maintenance Data: For drainage piping specialties to include in emergency, operation, and maintenance manuals.

SCHEDULE 5 - QUALITY ASSURANCE:

PRODUCT DATA SHEET 1 - Drainage piping specialties shall bear label, stamp, or other markings of specified testing agency.

PRODUCT DATA SHEET 2 - Electrical Components, Devices, and Accessories: Listed and labeled as defined in NFPA 70, Article 100, by a testing agency acceptable to authorities having jurisdiction, and marked for intended use.

PRODUCT DATA SHEET 3 - Comply with NSF 14, "Plastics Piping Components and Related Materials," for plastic sanitary and storm piping specialty components.

SCHEDULE 6 - COORDINATION

PRODUCT DATA SHEET 1 - Coordinate size and location of concrete bases. Cast anchor-bolt inserts into bases. Concrete, reinforcement, and formwork requirements are specified in Division 3.

PRODUCT DATA SHEET 2 - Coordinate size and location of roof penetrations.

PART 2 - PRODUCTS

SCHEDULE 1 - CLEANOUTS:

PRODUCT DATA SHEET 1 - Exposed Metal Cleanouts:

2.1 Basis-of-Design Product: Subject to compliance with requirements, provide Z-1440 or a comparable product by one of the following:

A. Josam Company; Josam Div.

B. MIFAB, Inc.

C. Smith, Jay R. Mfg. Co.; Division of Smith Industries, Inc.

D. Tyler Pipe; Wade Div.

E. Watts Drainage Products Inc.

F. Zurn Plumbing Products Group; Specification Drainage Operation.

2.2 Standard: ASME A112.36.2M for cast iron for cleanout test tee.

2.3 Size: Same as connected drainage piping

2.4 Body Material: Hub-and-spigot, cast-iron soil pipe T-branch as required to match connected piping.

2.5 Closure: Raised-head, plug.

2.6 Closure Plug Size: Same as or not more than one size smaller than cleanout size.

2.7 Retain last two subparagraphs above for ASME A112.36.2M cleanouts or subparagraph below for ASME A112.3.1, stainless-steel cleanouts.

2.8 Closure: Stainless-steel plug with seal.

PRODUCT DATA SHEET 2 - Metal Floor Cleanouts:

2.1 Basis-of-Design Product: Subject to compliance with requirements, provide Zurn ZN1400 or a comparable product by one of the following:

A. Josam Company; Josam Div.

B. Oatey.

C. Sioux Chief Manufacturing Company, Inc.

D. Smith, Jay R. Mfg. Co.; Division of Smith Industries, Inc.

E. Tyler Pipe; Wade Div.

F. Watts Drainage Products Inc.

G. Zurn Plumbing Products Group; Light Commercial Operation.

H. Zurn Plumbing Products Group; Specification Drainage Operation.

I. Josam Company; Josam Div.

J. Kusel Equipment Co.

K. Smith, Jay R. Mfg. Co.; Division of Smith Industries, Inc.

2.2 Standard: ASME A112.36.2M for adjustable housing cleanout.

2.3 Size: Same as connected branch.

2.4 Type: Adjustable housing.

2.5 Body or Ferrule: Cast iron.

2.6 Clamping Device: Required.

2.7 Outlet Connection: Inside calk, Spigot or Threaded.

2.8 Closure: Plastic plug.

2.9 Adjustable Housing Material: Cast iron with set-screws or other device.

2.10 Frame and Cover Material and Finish: Nickel-bronze, copper alloy.

2.11 Frame and Cover Shape: Round.

2.12 Top Loading Classification: Medium Duty.

2.13 Riser: ASTM A 74, Service class, cast-iron drainage pipe fitting and riser to cleanout.

2.14 Standard: ASME A112.3.1.

2.15 Size: Same as connected branch.

2.16 Housing: Stainless steel.

2.17 Closure: Stainless steel with seal.

2.18 Riser: Stainless-steel drainage pipe fitting to cleanout.

PRODUCT DATA SHEET 3 - Cast-Iron Wall Cleanouts:

2.1 Basis-of-Design Product: Subject to compliance with requirements, provide Zurn Z-1441or a comparable product by one of the following:

A. Josam Company; Josam Div.

B. MIFAB, Inc.

C. Smith, Jay R. Mfg. Co.; Division of Smith Industries, Inc.

D. Tyler Pipe; Wade Div.

E. Watts Drainage Products Inc.

F. Zurn Plumbing Products Group; Specification Drainage Operation.

2.2 Standard: ASME A112.36.2M. Include wall access.

2.3 Size: Same as connected drainage piping.

2.4 Body: Hubless, cast-iron soil pipe test tee as required to match connected piping.

2.5 Option for drilled-and-threaded plug in first subparagraph below is for a screw for a wall cover plate.

2.6 Closure: Drilled-and-threaded plug.

2.7 Closure Plug Size: Same as or not more than one size smaller than cleanout size.

2.8 Wall Access: Round, flat, chrome-plated brass or stainless-steel cover plate with screw.

2.9 Retain subparagraph above for cover plate or subparagraph below for frame and cover to be installed in drywall.

2.10 Wall Access: Round, stainless-steel wall-installation frame and cover.

SCHEDULE 2 - FLOOR DRAIN AND SINK:

PRODUCT DATA SHEET 1 - Cast-Iron Floor Drains FD-1(Locate in all finished areas i.e. toilet rooms).

2.1 Basis-of-Design Product: Subject to compliance with requirements, provide J.R. Smith 2005 series or a comparable product by one of the following:

A. Commercial Enameling Co.

B. Josam Company; Josam Div.

C. MIFAB, Inc.

D. Prier Products, Inc.

E. Smith, Jay R. Mfg. Co.; Division of Smith Industries, Inc.

F. Tyler Pipe; Wade Div.

G. Watts Drainage Products Inc.

H. Zurn Plumbing Products Group; Light Commercial Operation.

I. Zurn Plumbing Products Group; Specification Drainage Operation.

2.2 Standard: ASME A112.6.3.

2.3 Pattern: Floor drain.

2.4 Body Material: Cast iron.

2.5 Seepage Flange: Required.

2.6 Anchor Flange: Required.

2.7 Clamping Device: Required.

2.8 Outlet: Bottom.

2.9 Coating on Interior and Exposed Exterior Surfaces: Not required.

2.10 Sediment Bucket: Not required.

2.11 Top or Strainer Material: Nickel bronze.

2.12 Top of Body and Strainer Finish: Nickel bronze.

2.13 Top Shape: Round.

2.14 Top Loading Classification: Light Duty.

2.15 Funnel: not required.

2.16 Inlet Fitting: Gray iron, with threaded inlet and threaded or spigot outlet, and trap-seal primer valve connection.

2.17 Trap Material: Cast iron.

2.18 Trap Pattern: Standard P-trap.

2.19 Trap Features: Trap-seal primer valve drain connection.

PRODUCT DATA SHEET 2 - Cast-Iron Floor Sinks FS-1

2.1 Basis-of-Design Product: Subject to compliance with requirements, provide J.R. Smith 3100 series or a comparable product by one of the following:

A. Commercial Enameling Co.

B. Josam Company; Josam Div.

C. MIFAB, Inc.

D. Prier Products, Inc.

E. Smith, Jay R. Mfg. Co.; Division of Smith Industries, Inc.

F. Tyler Pipe; Wade Div.

G. Watts Drainage Products Inc.

H. Zurn Plumbing Products Group; Light Commercial Operation.

I. Zurn Plumbing Products Group; Specification Drainage Operation.

2.2 Standard: ASME A112.6.3.

2.3 Pattern: Floor sink.

2.4 Body Material: Cast iron.

2.5 Seepage Flange: Required.

2.6 Anchor Flange: Required.

2.7 Clamping Device: Required.

2.8 Outlet: Bottom.

2.9 Coating in first subparagraph below is usually used only on sanitary floor drains.

2.10 Coating on Interior and Exposed Exterior Surfaces: Required

2.11 Sediment Bucket: Required.

2.12 Top or Strainer Material: Nickel bronze.

2.13 Top of Body and Strainer Finish: Nickel bronze.

2.14 Top Shape: Round.

2.15 Top Loading Classification: Light Duty.

2.16 Funnel: not required.

2.17 Inlet Fitting: Gray iron, with threaded inlet and threaded or spigot outlet, and trap-seal primer valve connection.

2.18 Trap Material: Cast iron.

2.19 Trap Pattern: Standard P-trap with trap primer.

SCHEDULE 3 - Plastic Channel Drainage Systems TD-1

PRODUCT DATA SHEET 1 - Basis-of-Design Product: Subject to compliance with requirements, provide Zurn 883 or a comparable product by one of the following:

2.1 Smith, Jay R. Mfg. Co.; Division of Smith Industries, Inc.

2.2 Tuf-Tite Corporation.

2.3 Zurn Plumbing Products Group; Flo-Thru Operation.

PRODUCT DATA SHEET 2 - Type: Modular system of channel sections, grates, and appurtenances; designed so grates fit into channel recesses without rocking or rattling.

2.1 Channel Sections: Interlocking-joint, PE modular units, with end caps. Include flat, rounded, or inclined bottom, with level invert and with outlets in number, sizes, and locations indicated.

A. Dimensions: 6 inches wide. Include number of units required to form total lengths indicated.

2.2 Grates: With slots or perforations and widths and thickness that fit recesses in channel sections.

A. Material: Ductile iron

2.3 Supports, Anchors, and Setting Devices: Manufacturer's standard, unless otherwise indicated.

2.4 Channel-Section Joining and Fastening Materials: As recommended by system manufacturer.

SCHEDULE 4 - ROOF DRAINS AND STORM OVERFLOW DRAINS:

PRODUCT DATA SHEET 1 - Metal Roof Drains RD-1, OD-1:

2.1 Basis-of-Design Product: Subject to compliance with requirements, provide J.R. Smith 1310-ERC or a comparable product by one of the following:

A. Josam Company; Josam Div.

B. MIFAB, Inc.

C. Smith, Jay R. Mfg. Co.; Division of Smith Industries, Inc.

D. Tyler Pipe; Wade Div.

E. Watts Drainage Products Inc.

F. Zurn Plumbing Products Group; Light Commercial Operation.

G. Zurn Plumbing Products Group; Specification Drainage Operation.

2.2 Standard: ASME A112.21.2M.

2.3 Pattern: Combined roof and overflow drain.

2.4 Body Material: Cast iron.

2.5 Combination Flashing Ring and Gravel Stop: Required.

2.6 Flow-Control Weirs: 2” dam on OD only.

2.7 Outlet: Bottom.

2.8 Dome Material: Aluminum.

2.9 Extension Collars: Required.

2.10 Underdeck Clamp: Required.

2.11 Sump Receiver: Required.

SCHEDULE 5 - DOWNSPOUT NOZZLE

2.1 Basis-of-Design Product: Subject to compliance with requirements, provide J.R. Smith 1770 or a comparable product by one of the following:

A. Josam Company; Josam Div.

B. MIFAB, Inc.

C. Smith, Jay R. Mfg. Co.; Division of Smith Industries, Inc.

D. Tyler Pipe; Wade Div.

E. Watts Drainage Products Inc.

F. Zurn Plumbing Products Group; Light Commercial Operation.

G. Zurn Plumbing Products Group; Specification Drainage Operation.

PRODUCT DATA SHEET 1 - Description: ST-1: Cast bronze nozzle and flange, installed at the storm and overflow drains termination at the exterior walls nozzle design diverts water away from building eliminating stains, wall flange covers rough opening and serves as anchor.

SCHEDULE 6 - ROOF FLASHING ASSEMBLIES:

PRODUCT DATA SHEET 1 - Roof Flashing Assemblies:

2.1 Available Manufacturers: Subject to compliance with requirements, manufacturers offering products that may be incorporated into the Work include, but are not limited to, the following:

A. Acorn Engineering Company; Elmdor/Stoneman Div.

B. Thaler Metal Industries Ltd.

PRODUCT DATA SHEET 2 - Description: Manufactured assembly made of 4.0-lb/sq. ft. (20-kg/sq. m) thick, lead flashing collar and skirt extending at least 6 inches (150 mm) from pipe, with galvanized-steel boot reinforcement and counterflashing fitting.

2.1 Open-Top Vent Cap: Without cap.

SCHEDULE 7 - THROUGH-PENETRATION FIRESTOP ASSEMBLIES:

PRODUCT DATA SHEET 1 - Through-Penetration Firestop Assemblies:

2.1 Available Manufacturers: Subject to compliance with requirements, manufacturers offering products that may be incorporated into the Work include, but are not limited to, the following:

A. ProSet Systems Inc.

2.2 Standard: UL 1479 assembly of sleeve and stack fitting with firestopping plug.

2.3 Size: Same as connected soil, waste, or vent stack.

2.4 Sleeve: Molded PVC plastic, of length to match slab thickness and with integral nailing flange on one end for installation in cast-in-place concrete slabs.

2.5 Fitting in subparagraph below is for use with plastic stacks.

2.6 Stack Fitting: ASTM A 48/A 48M, gray-iron, hubless-pattern, wye branch with neoprene O-ring at base and gray-iron plug in thermal-release harness. Include PVC protective cap for plug.

2.7 Special Coating: Corrosion resistant on interior of fittings.

SCHEDULE 8 - MISCELLANEOUS DRAINAGE PIPING SPECIALTIES:

PRODUCT DATA SHEET 1 - Floor-Drain, Trap-Seal Primer Fittings:

2.1 Description: Cast iron, with threaded inlet and threaded or spigot outlet, and trap-seal primer valve connection.

2.2 Size: Same as floor drain outlet with NPS 1/2 (DN 15) side inlet.

PRODUCT DATA SHEET 2 - Air-Gap Fittings:

2.1 Standard: ASME A112.1.2, for fitting designed to ensure fixed, positive air gap between installed inlet and outlet piping.

2.2 Body: Bronze or cast iron.

2.3 Inlet: Opening in top of body.

2.4 Outlet: Larger than inlet.

2.5 Size: Same as connected waste piping and with inlet large enough for associated indirect waste piping.

PRODUCT DATA SHEET 3 - Stack Flashing Fittings:

2.1 Description: Counterflashing-type, cast-iron fitting, with bottom recess for terminating roof membrane, and with threaded or hub top for extending vent pipe.

2.2 Size: Same as connected stack vent or vent stack.

SCHEDULE 9 - FLASHING MATERIALS:

PRODUCT DATA SHEET 1 - Lead Sheet: ASTM B 749, Type L51121, copper bearing, with the following minimum weights and thicknesses, unless otherwise indicated:

2.1 General Use: 4.0-lb/sq. ft. (20-kg/sq. m), 0.0625-inch (1.6-mm) thickness.

2.2 Vent Pipe Flashing: 3.0-lb/sq. ft. (15-kg/sq. m), 0.0469-inch (1.2-mm) thickness.

2.3 Burning: 6-lb/sq. ft. (30-kg/sq. m), 0.0938-inch (2.4-mm) thickness.

PRODUCT DATA SHEET 2 - Copper Sheet: ASTM B 152/B 152M, of the following minimum weights and thicknesses, unless otherwise indicated:

2.1 General Applications: 12 oz./sq. ft. (3.7 kg/sq. m or 0.41-mm thickness).

2.2 Vent Pipe Flashing: 8 oz./sq. ft. (2.5 kg/sq. m or 0.27-mm thickness).

PRODUCT DATA SHEET 3 - Zinc-Coated Steel Sheet: ASTM A 653/A 653M, with 0.20 percent copper content and 0.04-inch (1.01-mm) minimum thickness, unless otherwise indicated. Include G90 (Z275) hot-dip galvanized, mill-phosphatized finish for painting if indicated.

PRODUCT DATA SHEET 4 - Elastic Membrane Sheet: ASTM D 4068, flexible, chlorinated polyethylene, 40-mil (1.01-mm) minimum thickness.

PRODUCT DATA SHEET 5 - Fasteners: Metal compatible with material and substrate being fastened.

PRODUCT DATA SHEET 6 - Metal Accessories: Sheet metal strips, clamps, anchoring devices, and similar accessory units required for installation; matching or compatible with material being installed.

PRODUCT DATA SHEET 7 - Solder: ASTM B 32, lead-free alloy.

PRODUCT DATA SHEET 8 - Bituminous Coating: SSPC-Paint 12, solvent-type, bituminous mastic.

PART 3 - EXECUTION

SCHEDULE 1 - INSTALLATION

PRODUCT DATA SHEET 1 - Refer to Division 22 Section "Basic Materials and Methods" for piping joining materials, joint construction, and basic installation requirements.

PRODUCT DATA SHEET 2 - Install cleanouts in aboveground piping and building drain piping according to the following, unless otherwise indicated:

3.1 Size same as drainage piping up to NPS 4 (DN 100). Use NPS 4 (DN 100) for larger drainage piping unless larger cleanout is indicated.

3.2 Locate at each change in direction of piping greater than 45 degrees.

3.3 Locate at minimum intervals of 50 feet (15 m) for piping NPS 4 (DN 100) and smaller and 100 feet (30 m) for larger piping.

3.4 Locate at base of each vertical soil and waste stack.

PRODUCT DATA SHEET 3 - For floor cleanouts for piping below floors, install cleanout deck plates with top flush with finished floor.

PRODUCT DATA SHEET 4 - For cleanouts located in concealed piping, install cleanout wall access covers, of types indicated, with frame and cover flush with finished wall.

PRODUCT DATA SHEET 5 - Install floor drains at low points of surface areas to be drained. Set grates of drains flush with finished floor, unless otherwise indicated.

3.1 Coordinate four subparagraphs and associated subparagraphs below with Drawings.

3.2 Position floor drains for easy access and maintenance.

3.3 Set floor drains below elevation of surrounding finished floor to allow floor drainage. Set with grates depressed according to the following drainage area radii:

A. Radius, 30 Inches (750 mm) or Less: Equivalent to 1 percent slope, but not less than 1/4-inch (6.35-mm) total depression.

B. Radius, 30 to 60 Inches (750 to 1500 mm): Equivalent to 1 percent slope.

C. Radius, 60 Inches (1500 mm) or Larger: Equivalent to 1 percent slope, but not greater than 1-inch (25-mm) total depression.

3.4 Install floor-drain flashing collar or flange so no leakage occurs between drain and adjoining flooring. Maintain integrity of waterproof membranes where penetrated.

3.5 Install individual traps for floor drains connected to sanitary building drain, unless otherwise indicated.

PRODUCT DATA SHEET 6 - Install roof drains at low points of roof areas according to roof membrane manufacturer's written installation instructions. Roofing materials are specified in Division 7.

3.1 Install roof-drain flashing collar or flange so that there will be no leakage between drain and adjoining roofing. Maintain integrity of waterproof membranes where penetrated.

3.2 Position roof drains for easy access and maintenance.

PRODUCT DATA SHEET 7 - Install cast-iron soil pipe downspout boots at grade with top of hub 6 inches (152 mm) above grade.

PRODUCT DATA SHEET 8 - Install roof flashing assemblies on sanitary stack vents and vent stacks that extend through roof.

PRODUCT DATA SHEET 9 - Install flashing fittings on sanitary stack vents and vent stacks that extend through roof.

PRODUCT DATA SHEET 10 - Install floor-drain, trap-seal primer fittings on inlet to floor drains that require trap-seal primer connection.

3.1 Exception: Fitting may be omitted if trap has trap-seal primer connection.

3.2 Size: Same as floor drain inlet.

PRODUCT DATA SHEET 11 - Install air-gap fittings on draining-type backflow preventers and on indirect-waste piping discharge into sanitary drainage system.

PRODUCT DATA SHEET 12 - Install sleeve flashing device with each riser and stack passing through floors with waterproof membrane.

PRODUCT DATA SHEET 13 - Install cast-iron soil pipe downspout boots at grade with top of hub 6 inches (152 mm) above grade.

PRODUCT DATA SHEET 14 - Install wood-blocking reinforcement for wall-mounting-type specialties.

PRODUCT DATA SHEET 15 - Install traps on plumbing specialty drain outlets. Omit traps on indirect wastes unless trap is indicated.

PRODUCT DATA SHEET 16 - Install escutcheons at wall, floor, and ceiling penetrations in exposed finished locations and within cabinets and millwork. Use deep-pattern escutcheons if required to conceal protruding pipe fittings.

SCHEDULE 2 - CONNECTIONS

PRODUCT DATA SHEET 1 - Piping installation requirements are specified in other Division 22 Sections. Drawings indicate general arrangement of piping, fittings, and specialties.

PRODUCT DATA SHEET 2 - Install piping adjacent to equipment to allow service and maintenance.

PRODUCT DATA SHEET 3 - Ground equipment according to Division 26 Section "Grounding and Bonding."

PRODUCT DATA SHEET 4 - Connect wiring according to Division 26 Section "Conductors and Cables."

SCHEDULE 3 - FLASHING INSTALLATION

PRODUCT DATA SHEET 0 - Fabricate flashing from single piece unless large pans, sumps, or other drainage shapes are required. Join flashing according to the following if required:

3.1 Lead Sheets: Burn joints of lead sheets 6.0-lb/sq. ft. (30-kg/sq. m), 0.0938-inch (2.4-mm) thickness or thicker. Solder joints of lead sheets 4.0-lb/sq. ft. (20-kg/sq. m), 0.0625-inch (1.6-mm) thickness or thinner.

3.2 Copper Sheets: Solder joints of copper sheets.

PRODUCT DATA SHEET 1 - Install sheet flashing on pipes, sleeves, and specialties passing through or embedded in floors and roofs with waterproof membrane.

3.1 Pipe Flashing: Sleeve type, matching pipe size, with minimum length of 10 inches (250 mm), and skirt or flange extending at least 8 inches (200 mm) around pipe.

3.2 Sleeve Flashing: Flat sheet, with skirt or flange extending at least 8 inches (200 mm) around sleeve.

3.3 Embedded Specialty Flashing: Flat sheet, with skirt or flange extending at least 8 inches (200 mm) around specialty.

PRODUCT DATA SHEET 2 - Set flashing on floors and roofs in solid coating of bituminous cement.

PRODUCT DATA SHEET 3 - Secure flashing into sleeve and specialty clamping ring or device.

PRODUCT DATA SHEET 4 - Install flashing for piping passing through roofs with counterflashing or commercially made flashing fittings, according to Division 7 Section "Sheet Metal Flashing and Trim."

PRODUCT DATA SHEET 5 - Extend flashing up vent pipe passing through roofs and turn down into pipe, or secure flashing into cast-iron sleeve having calking recess.

PRODUCT DATA SHEET 6 - Fabricate and install flashing and pans, sumps, and other drainage shapes.

SCHEDULE 4 - FIELD QUALITY CONTROL

PRODUCT DATA SHEET 1 - Tests and Inspections:

3.1 Leak Test: After installation, charge system and test for leaks. Repair leaks and retest until no leaks exist.

3.2 Test and adjust controls and safeties. Replace damaged and malfunctioning controls and equipment.

SCHEDULE 5 - PROTECTION

PRODUCT DATA SHEET 1 - Protect drains during remainder of construction period to avoid clogging with dirt or debris and to prevent damage from traffic or construction work.

PRODUCT DATA SHEET 2 - Place plugs in ends of uncompleted piping at end of each day or when work stops.

END OF SECTION 22 13 19

SECTION 22 33 00 – ELECTRIC DOMESTIC WATER HEATERS & ACCESSORIES

SCHEDULE 1 - RELATED DOCUMENTS:

PRODUCT DATA SHEET 1 - Drawings and general provisions of the Contract, including General and Supplementary Conditions and Division 01 Specification Sections, apply to this Section.

SCHEDULE 2 - SUMMARY:

PRODUCT DATA SHEET 1 - This Section includes the following electric water heaters:

1.1 Flow-control, instantaneous electric water heaters.

1.2 Water heater accessories.

SCHEDULE 3 - SUBMITTALS:

PRODUCT DATA SHEET 1 - Product Data: For each type and size of water heater indicated. Include rated capacities, operating characteristics, furnished specialties, and accessories.

PRODUCT DATA SHEET 2 - Shop Drawings: Diagram power, signal, and control wiring.

PRODUCT DATA SHEET 3 - Product Certificates: For each type of instantaneous electric water heater, signed by product manufacturer.

PRODUCT DATA SHEET 4 - Manufacturer Seismic Qualification Certification: Submit certification that commercial water heaters, accessories, and components will withstand seismic forces defined in Division 22 Section "Vibration and Seismic Controls for Plumbing Piping and Equipment." Include the following:

1.1 Basis for Certification: Indicate whether withstand certification is based on actual test of assembled components or on calculation.

A. The term "withstand" means "the unit will remain in place without separation of any parts from the device when subjected to the seismic forces specified."

B. The term "withstand" means "the unit will remain in place without separation of any parts from the device when subjected to the seismic forces specified and the unit will be fully operational after the seismic event."

1.2 Dimensioned Outline Drawings of Equipment Unit: Identify center of gravity and locate and describe mounting and anchorage provisions.

1.3 Detailed description of equipment anchorage devices on which the certification is based and their installation requirements.

PRODUCT DATA SHEET 5 - Source quality-control test reports.

PRODUCT DATA SHEET 6 - Field quality-control test reports.

PRODUCT DATA SHEET 7 - Operation and Maintenance Data: For electric water heaters to include in emergency, operation, and maintenance manuals.

PRODUCT DATA SHEET 8 - Warranty: Special warranty specified in this Section.

SCHEDULE 4 - QUALITY ASSURANCE:

PRODUCT DATA SHEET 1 - Source Limitations: Obtain same type of electric water heaters through one source from a single manufacturer.

PRODUCT DATA SHEET 2 - Product Options: Drawings indicate size, profiles, and dimensional requirements of electric water heaters and are based on the specific system indicated. Refer to Division 01 Section "Product Requirements."

PRODUCT DATA SHEET 3 - Electrical Components, Devices, and Accessories: Listed and labeled as defined in NFPA 70, Article 100, by a testing agency acceptable to authorities having jurisdiction, and marked for intended use.

PRODUCT DATA SHEET 4 - ASME Compliance: Where indicated, fabricate and label commercial water heater storage tanks to comply with ASME Boiler and Pressure Vessel Code: Section VIII, Division 1.

PRODUCT DATA SHEET 5 - Comply with NSF 61, "Drinking Water System Components - Health Effects; Sections 1 through 9," for all components that will be in contact with potable water.

SCHEDULE 5 - COORDINATION:

PRODUCT DATA SHEET 1 - Coordinate size and location of concrete bases with Architectural and Structural Drawings.

SCHEDULE 6 - WARRANTY:

PRODUCT DATA SHEET 0 - Special Warranty: Manufacturer's standard form in which manufacturer agrees to repair or replace components of electric water heaters that fail in materials or workmanship within specified warranty period.

1.1 Failures include, but are not limited to, the following:

A. Structural failures including storage tank and supports.

B. Faulty operation of controls.

C. Deterioration of metals, metal finishes, and other materials beyond normal use.

PART 2 - PRODUCTS

SCHEDULE 1 - COMMERCIAL, STORAGE ELECTRIC WATER HEATERS:

PRODUCT DATA SHEET 1 - Comply with UL 1453 Requirements for Storage-Tank-Type Water Heaters.

PRODUCT DATA SHEET 2 - Manufacturers:

2.1 American Water Heater Company.

2.2 Bock Water Heaters, Inc.

2.3 Bradford White Corporation.

2.4 Cemline Corporation.

2.5 Electric Heater Company (The); Hubbell Heaters Division.

2.6 GSW Water Heating Company.

2.7 HESco Industries, Inc.

2.8 Lochinvar Corporation.

2.9 Precision Boilers.

2.10 PVI Industries, LLC.

2.11 RECO USA.

2.12 Rheem Water Heater Div.; Rheem Manufacturing Company.

2.13 Ruud Water Heater Div.; Rheem Manufacturing Company.

2.14 Smith, A. O. Water Products Company.

2.15 State Industries, Inc.

2.16 Vaughn Manufacturing Corporation.

PRODUCT DATA SHEET 3 - Storage-Tank Construction: ASME-code, steel vertical arrangement.

2.1 Tappings: Factory fabricated of materials compatible with tank and piping connections. Attach tappings to tank before testing.

A. NPS 2 (DN 50) and Smaller: Threaded ends according to ASME B1.20.1.

B. NPS 2-1/2 (DN 65) and Larger: Flanged ends according to ASME B16.5 for steel and stainless-steel flanges, and according to ASME B16.24 for copper and copper-alloy flanges.

2.2 Pressure Rating: 150 psig (1035 kPa).

2.3 Interior Finish: Comply with NSF 61 barrier materials for potable-water tank linings, including extending lining material into tappings.

PRODUCT DATA SHEET 4 - Factory-Installed Storage-Tank Appurtenances:

2.1 Anode Rod: Replaceable magnesium.

2.2 Drain Valve: Corrosion-resistant metal complying with ASSE 1005.

2.3 Insulation: Comply with ASHRAE/IESNA 90.1.

2.4 Jacket: Steel with enameled finish.

2.5 Heating Elements: Electric, screw-in or bolt-on immersion type arranged in multiples of three.

A. Staging: Input not exceeding 45 kW per step.

2.6 Temperature Control: Adjustable thermostat.

2.7 Safety Controls: High-temperature-limit and low-water cutoff devices or systems.

2.8 Relief Valves: ASME rated and stamped and complying with ASME PTC 25.3, for combination temperature and pressure relief valves. Include one or more relief valves with total relieving capacity at least as great as heat input, and include pressure setting less than water heater working-pressure rating. Select one relief valve with sensing element that extends into storage tank.

PRODUCT DATA SHEET 5 - Special Requirements: NSF 5 construction.

PRODUCT DATA SHEET 6 - Capacity and Characteristics:

2.1 Capacity: 119 gal. (L).

2.2 Recovery: 184 gph (L/s) at 100 deg F (56 deg C) temperature rise.

2.3 Temperature Setting: 120 deg F (deg C).

2.4 Number of Heating Elements: Nine.

A. Number of Stages: Nine.

B. Kilowatt per Stage: 5.

2.5 Electrical Characteristics:

A. Power Demand: 45 Kilowatts.

B. Volts: 208.

C. Phases: Three.

D. Hertz: 60.

SCHEDULE 2 - WATER HEATER ACCESSORIES:

PRODUCT DATA SHEET 1 - Combination Temperature and Pressure Relief Valves: ASME rated and stamped and complying with ASME PTC 25.3. Include relieving capacity at least as great as heat input, and include pressure setting less than water heater working-pressure rating. Select relief valves with sensing element that extends into storage tank.

PRODUCT DATA SHEET 2 - Pressure Relief Valves: ASME rated and stamped and complying with ASME PTC 25.3. Include pressure setting less than water heater working-pressure rating.

PRODUCT DATA SHEET 3 - Manufacturer's factory-fabricated steel bracket for wall mounting and capable of supporting water heater and water.

PRODUCT DATA SHEET 4 - Shock Absorbers: ASSE 1010 or PDI WH 201, Size A water hammer arrester.

PRODUCT DATA SHEET 5 - Domestic-Water Compression Tanks:

2.1 Basis-of-Design Product: Subject to compliance with requirements, provide product indicated on Drawings or comparable product by one of the following:

A. AMTROL Inc.

B. Flexcon Industries.

C. Honeywell International Inc.

D. Pentair Pump Group (The); Myers.

E. Smith, A. O. Water Products Co.; a division of A. O. Smith Corporation.

F. State Industries.

G. Taco, Inc.

H. Zurn

2.2 Description: Steel pressure-rated tank constructed with welded joints and factory-installed butyl-rubber diaphragm. Include air pre-charge to minimum system-operating pressure at tank.

2.3 Construction:

A. Tappings: Factory-fabricated steel, welded to tank before testing and labeling. Include ASME B1.20.1 pipe thread.

B. Interior Finish: Comply with NSF 61 barrier materials for potable-water tank linings, including extending finish into and through tank fittings and outlets.

C. Air-Charging Valve: Factory installed.

2.4 Capacity and Characteristics:

A. Working-Pressure Rating: 100 psig (690 kPa).

B. Capacity Acceptable: 2.4 gallon.

2.5 Drain Pans: Corrosion-resistant metal with raised edge. Comply with ANSI/CSA LC 3. Include dimensions not less than base of domestic-water heater, and include drain outlet not less than NPS 3/4 (DN 20) with ASME B1.20.1 pipe threads or with ASME B1.20.7 garden-hose threads.

PRODUCT DATA SHEET 6 - IN-LINE, CIRCULATION PUMPS:

2.1 Basis-of-Design Product: Subject to compliance with requirements, provide product indicated on Drawings or comparable product by one of the following:

A. Armstrong Pumps Inc.

B. Bell & Gossett Domestic Pump; ITT Corporation.

C. Grundfos Pumps Corp.

D. TACO Incorporated.

E. WILO USA LLC - WILO Canada Inc.

2.2 Description: Factory-assembled and -tested, in-line, close-coupled, canned-motor, seal-less, overhung-impeller centrifugal pumps.

2.3 Pump Construction:

A. Pump and Motor Assembly: Hermetically sealed, replaceable-cartridge type with motor and impeller on common shaft and designed for installation with pump and motor shaft horizontal.

B. Casing: Bronze, with threaded or companion-flange connections.

C. Impeller: Plastic.

D. Motor: Single speed, unless otherwise indicated.

2.4 Capacities and Characteristics:

A. Capacity: 3 gpm.

B. Total Dynamic Head: 5 feet.

C. Minimum Working Pressure: 125 psig (860 kPa).

D. Maximum Continuous Operating Temperature: 220 deg F (104 deg C).

E. Pump Control: Thermostat.

F. Electrical Characteristics:

1. Volts: 120.

2. Phases: Single.

3. Hertz: 60.

4. Full-Load Amperes: 0.46 amps.

PART 3 - EXECUTION

SCHEDULE 1 - WATER HEATER INSTALLATION:

PRODUCT DATA SHEET 1 - Install commercial water heaters on concrete bases.

3.1 Exception: Omit concrete bases for commercial water heaters if installation on stand, bracket, suspended platform, or direct on floor is indicated.

PRODUCT DATA SHEET 2 - Install water heaters level and plumb, according to layout drawings, original design, and referenced standards. Maintain manufacturer's recommended clearances. Arrange units so controls and devices needing service are accessible.

PRODUCT DATA SHEET 3 - Install seismic restraints for light-commercial and commercial water heaters. Anchor to substrate.

PRODUCT DATA SHEET 4 - Install combination temperature and pressure relief valves in top portion of storage tanks. Use relief valves with sensing elements that extend into tanks. Extend commercial-water-heater relief-valve outlet, with drain piping same as domestic water piping in continuous downward pitch, and discharge by positive air gap onto closest floor drain.

PRODUCT DATA SHEET 5 - Install water-heater drain piping as indirect waste to spill by positive air gap into open drains or over floor drains. Install hose-end drain valves at low points in water piping for water heaters that do not have tank drains. Refer to Division 22 Section "Domestic Water Piping Specialties" for hose-end drain valves.

PRODUCT DATA SHEET 6 - Install thermometer on outlet piping of water heaters. Refer to Division 22 Section "Meters and Gages for Plumbing Piping" for thermometers.

PRODUCT DATA SHEET 7 - Install pressure gage(s) on inlet and outlet of commercial electric water-heater piping. Refer to Division 22 Section "Meters and Gages for Plumbing Piping" for pressure gages.

PRODUCT DATA SHEET 8 - Install piping-type heat traps on inlet and outlet piping of water heater storage tanks without integral or fitting-type heat traps.

PRODUCT DATA SHEET 9 - Fill water heaters with water.

PRODUCT DATA SHEET 10 - Charge compression tanks with air.

SCHEDULE 2 - CONNECTIONS:

PRODUCT DATA SHEET 1 - Piping installation requirements are specified in other Division 22 Sections. Drawings indicate general arrangement of piping, fittings, and specialties.

PRODUCT DATA SHEET 2 - Install piping adjacent to water heaters to allow service and maintenance. Arrange piping for easy removal of water heaters.

PRODUCT DATA SHEET 3 - Ground equipment according to Division 26 Section "Grounding and Bonding for Electrical Systems."

PRODUCT DATA SHEET 4 - Connect wiring according to Division 26 Section "Low-Voltage Electrical Power Conductors and Cables."

PRODUCT DATA SHEET 5 - Connect thermostats to pumps that they control.

SCHEDULE 3 - PUMP INSTALLATION:

PRODUCT DATA SHEET 1 - Install in-line, seal-less centrifugal pumps with shaft horizontal unless otherwise indicated.

PRODUCT DATA SHEET 2 - Install thermostats in hot-water return piping.

SCHEDULE 4 - FIELD QUALITY CONTROL:

PRODUCT DATA SHEET 1 - Manufacturer's Field Service: Engage a factory-authorized service representative to inspect, test, and adjust field-assembled components and equipment installation, including connections, and to assist in field testing. Report results in writing.

PRODUCT DATA SHEET 2 - Perform the following field tests and inspections and prepare test reports:

3.1 Leak Test: After installation, test for leaks. Repair leaks and retest until no leaks exist.

3.2 Operational Test: After electrical circuitry has been energized, confirm proper operation.

3.3 Test and adjust controls and safeties. Replace damaged and malfunctioning controls and equipment.

PRODUCT DATA SHEET 3 - Remove and replace water heaters that do not pass tests and inspections and retest as specified above.

SCHEDULE 5 - DEMONSTRATION:

PRODUCT DATA SHEET 1 - Engage a factory-authorized service representative to train Owner's maintenance personnel to adjust, operate, and maintain commercial and instantaneous electric water heaters. Refer to Division 01 Section "Demonstration and Training."

SCHEDULE 6 - ADJUSTING:

PRODUCT DATA SHEET 0 - Adjust domestic water pumps to function smoothly, and lubricate as recommended by manufacturer.

PRODUCT DATA SHEET 1 - Adjust initial temperature set points.

PRODUCT DATA SHEET 2 - Set field-adjustable switches and circuit-breaker trip ranges as indicated.

END OF SECTION 22 33 0

SECTION 22 40 00 - PLUMBING FIXTURES

PART 1 - GENERAL

SCHEDULE 1 - RELATED DOCUMENTS:

PRODUCT DATA SHEET 1 - Drawings and general provisions of the Contract, including General and Supplementary Conditions and Division 1 Specification Sections, apply to this Section.

SCHEDULE 2 - SUMMARY:

PRODUCT DATA SHEET 1 - This Section includes the following conventional plumbing fixtures and related components:

1.1 Faucets for lavatories and sinks.

1.2 Flushometers.

1.3 Toilet seats.

1.4 Protective shielding guards.

1.5 Fixture supports.

1.6 Garbage Disposal.

1.7 Water closets.

1.8 Lavatories.

1.9 Kitchen sinks.

1.10 Sinks.

1.11 Service sinks.

PRODUCT DATA SHEET 2 - Related Sections include the following:

1.1 Division 33 Section "Water Distribution" for exterior plumbing fixtures and hydrants.

1.2 Division 10 Section "Toilet and Bath Accessories."

1.3 Division 22 Section "Plumbing Specialties" for backflow preventers, floor drains, and specialty fixtures not included in this Section.

SCHEDULE 3 - DEFINITIONS:

PRODUCT DATA SHEET 1 - ABS: Acrylonitrile-butadiene-styrene plastic.

PRODUCT DATA SHEET 2 - Accessible Fixture: Plumbing fixture that can be approached, entered, and used by people with disabilities.

PRODUCT DATA SHEET 3 - Cast Polymer: Cast-filled-polymer-plastic material. This material includes cultured-marble and solid-surface materials.

PRODUCT DATA SHEET 4 - Cultured Marble: Cast-filled-polymer-plastic material with surface coating.

PRODUCT DATA SHEET 5 - Fitting: Device that controls the flow of water into or out of the plumbing fixture. Fittings specified in this Section include supplies and stops, faucets and spouts, shower heads and tub spouts, drains and tailpieces, and traps and waste pipes. Piping and general-duty valves are included where indicated.

PRODUCT DATA SHEET 6 - FRP: Fiberglass-reinforced plastic.

PRODUCT DATA SHEET 7 - PMMA: Polymethyl methacrylate (acrylic) plastic.

PRODUCT DATA SHEET 8 - PVC: Polyvinyl chloride plastic.

PRODUCT DATA SHEET 9 - Solid Surface: Nonporous, homogeneous, cast-polymer-plastic material with heat-, impact-, scratch-, and stain-resistance qualities.

SCHEDULE 4 - SUBMITTALS:

PRODUCT DATA SHEET 1 - Product Data: For each type of plumbing fixture indicated. Include selected fixture and trim, fittings, accessories, appliances, appurtenances, equipment, and supports. Indicate materials and finishes, dimensions, construction details, and flow-control rates.

PRODUCT DATA SHEET 2 - Shop Drawings: Diagram power, signal, and control wiring.

PRODUCT DATA SHEET 3 - Operation and Maintenance Data: For plumbing fixtures to include in emergency, operation, and maintenance manuals.

PRODUCT DATA SHEET 4 - Warranty: Special warranty specified in this Section.

SCHEDULE 5 - QUALITY ASSURANCE:

PRODUCT DATA SHEET 1 - Source Limitations: Obtain plumbing fixtures, faucets, and other components of each category through one source from a single manufacturer.

1.1 Exception: If fixtures, faucets, or other components are not available from a single manufacturer, obtain similar products from other manufacturers specified for that category.

PRODUCT DATA SHEET 2 - Electrical Components, Devices, and Accessories: Listed and labeled as defined in NFPA 70, Article 100, by a testing agency acceptable to authorities having jurisdiction, and marked for intended use.

PRODUCT DATA SHEET 3 - Regulatory Requirements: Comply with requirements in ICC A117.1, "Accessible and Usable Buildings and Facilities"; Public Law 90-480, "Architectural Barriers Act"; and Public Law 101-336, "Americans with Disabilities Act"; California Building Code latest edition for plumbing fixtures for people with disabilities.

PRODUCT DATA SHEET 4 - Regulatory Requirements: Comply with requirements in Public Law 102-486, "Energy Policy Act," about water flow and consumption rates for plumbing fixtures.

PRODUCT DATA SHEET 5 - NSF Standard: Comply with NSF 61, "Drinking Water System Components--Health Effects," for fixture materials that will be in contact with potable water.

PRODUCT DATA SHEET 6 - California state law requirements, San Diego city and county and latest edition of California Plumbing and Energy Codes.

PRODUCT DATA SHEET 7 - Select combinations of fixtures and trim, faucets, fittings, and other components that are compatible.

PRODUCT DATA SHEET 8 - Comply with the following applicable standards and other requirements specified for plumbing fixtures:

1.1 Plastic Mop-Service Basins: ANSI Z124.6.

1.2 Solid-Surface-Material Lavatories and Sinks: ANSI/ICPA SS-1.

1.3 Stainless-Steel Residential Sinks: ASME A112.19.3.

1.4 Vitreous-China Fixtures: ASME A112.19.2M.

PRODUCT DATA SHEET 9 - Comply with the following applicable standards and other requirements specified for lavatory and sink faucets:

1.1 Faucets: ASME A112.18.1.

1.2 Pipe Threads: ASME B1.20.1.

1.3 Supply Fittings: ASME A112.18.1.

1.4 Brass Waste Fittings: ASME A112.18.2.

PRODUCT DATA SHEET 10 - Comply with the following applicable standards and other requirements specified for miscellaneous fittings:

1.1 Atmospheric Vacuum Breakers: ASSE 1001.

1.2 Brass and Copper Supplies: ASME A112.18.1.

1.3 Dishwasher Air-Gap Fittings: ASSE 1021.

1.4 Manual-Operation Flushometers: ASSE 1037.

1.5 Brass Waste Fittings: ASME A112.18.2.

PRODUCT DATA SHEET 11 - Comply with the following applicable standards and other requirements specified for miscellaneous components:

1.1 Disposers: ASSE 1008 and UL 430.

1.2 Flexible Water Connectors: ASME A112.18.6.

1.3 Floor Drains: ASME A112.6.3.

1.4 Grab Bars: ASTM F 446.

1.5 Hose-Coupling Threads: ASME B1.20.7.

1.6 Off-Floor Fixture Supports: ASME A112.6.1M.

1.7 Pipe Threads: ASME B1.20.1.

1.8 Plastic Toilet Seats: ANSI Z124.5.

1.9 Supply and Drain Protective Shielding Guards: ICC A117.1.

SCHEDULE 6 - EXTRA MATERIALS:

PRODUCT DATA SHEET 1 - Furnish extra materials described below that match products installed and that are packaged with protective covering for storage and identified with labels describing contents.

1.1 Faucet Washers and O-Rings: Equal to 2.

1.2 Faucet Cartridges and O-Rings: Equal to 3.

1.3 Flushometer Valve, Repair Kits: Equal to 5.

PART 2 - PRODUCTS

SCHEDULE 1 - LAVATORY FAUCETS:

PRODUCT DATA SHEET 1 - Lavatory Faucets:

2.1 Basis-of-Design Product: Subject to compliance with requirements, provide per Fixture Connection Schedule Sheet P0-1 or a comparable product by one of the following:

A. Chicago Faucets.

B. Speakman Company.

C. Symmons

2.2 Description: LAV-1: Metering self-closing/temperature selection faucet with time limit stop to adjust run time. Temperature limit stop, 0.2 gallons per cycle. Provide and install with thermostatic mixing valve to meet ADA requirements.

2.3 Description: LAV-2: Single lever handle, ceramic disc cartridge, chrome plated, solid brass construction, 4" center with aerator discharging no more than 0.4 GPM.

2.4 Description: LAV-3: Single lever handle, ceramic disc cartridge, chrome plated, solid brass construction, 4" center with aerator discharging no more than 0.4 GPM. Provide and install with thermostatic mixing valve to meet ADA requirements.

SCHEDULE 2 - SHOWER FAUCETS:

PRODUCT DATA SHEET 1 - Shower Faucets:

2.1 Basis-of-Design Product: Subject to compliance with requirements, provide per Fixture Connection Schedule Sheet P0-1 or a comparable product by one of the following:

A. Chicago Faucets.

B. Speakman Company.

C. Symmons

PRODUCT DATA SHEET 2 - Non ADA Showers

2.1 SH-1: Pressure balancing mixing valve with lever handle and adjustable stop screw to limit handle turn. Fixed 1.75 GPM shower head with arm and flange.

PRODUCT DATA SHEET 3 - ADA Compliant Showers

2.1 SH-2: Pressure balancing mixing valve with lever handle and adjustable stop screw to limit handle turn. Fixed 1.75 GPM shower head with arm and flange, lever diverter with integral volume control, 1.75 GPM ADA compliant handheld shower with flexible metal hose, inline vacuum breaker, wall connection and flange, 30” side bar for hand shower mounting.

PRODUCT DATA SHEET 4 - Drains shall be FD-1

SCHEDULE 3 - SINK FAUCETS:

PRODUCT DATA SHEET 1 - Sink Faucets:

2.1 Basis-of-Design Product: Subject to compliance with requirements, provide per Fixture Connection Schedule Sheet P0-1 or a comparable product by one of the following:

A. American Standard Companies, Inc.

B. Chicago Faucets.

C. Kohler Co.

D. Speakman Company.

E. T & S Brass and Bronze Works, Inc.

F. Zurn Plumbing Products Group; Commercial Brass Operation.

2.2 S-1: Deck mounted, chrome plated solid brass construction, 8" center to center rigid/swing 8" gooseneck spout, wristblade handles and sidespray, 1.8 GPM maximum flowrate.

2.3 KS-1: Lever handle, solid brass, chrome plated with deck plate, 9" swing spout with side spray, 1.8 GPM maximum flowrate.

2.4 JS-1: Wall mounted 8" fixed centers, chrome plated solid brass, pail hook and wall brace, lever handles, quaturn compression cartridge, straight 2" inlet supply arm with wall flange, 1/2" female thread inlet, .

2.5 JS-2: Wall mounted 8" body, adjustable arms, chrome plated solid brass, 12" L type swing spout, lever handles, ceramic quarter turn cartridge,, straight 3/8" offset inlet supply arm with slip wall flange, 1/2" female thread inlet, integral stop valves, full flow outlet.

2.6 JS-3: Wall mounted 8" body, adjustable arms, chrome plated solid brass, 9-1/2" L type swing spout, lever handles, ceramic quarter turn cartridge, straight 3/8" offset inlet supply arm with slip wall flange, 1/2" female thread inlet, integral stop valves, full flow outlet.

SCHEDULE 4 - FLUSHOMETERS:

PRODUCT DATA SHEET 1 - Flushometers, WC-1 & 2:

2.1 Basis-of-Design Product: Subject to compliance with requirements, provide per Fixture Connection Schedule Sheet P0-1 or a comparable product by one of the following:

A. Coyne & Delany Co.

B. Delta Faucet Company.

C. Sloan Valve Company.

D. Zurn Plumbing Products Group; Commercial Brass Operation.

2.2 Exposed, diaphragm type, chrome plated, 1.28 GPF, manual flush valve, ADA compliant where required. Spud coupling and flange for top spud connection, vandal resistant stop cap. Dual filtered bypass, internal seals chloramines resistant.

SCHEDULE 5 - TOILET SEATS:

PRODUCT DATA SHEET 1 - Toilet Seats:

2.1 Basis-of-Design Product: Subject to compliance with requirements, provide per Fixture Connection Schedule Sheet P0-1 or a comparable product by one of the following:

A. American Standard Companies, Inc.

B. Bemis Manufacturing Company.

C. Centoco Manufacturing Corp.

D. Church Seats.

E. Eljer.

F. Kohler Co.

G. Olsonite Corp.

H. Sanderson Plumbing Products, Inc.; Beneke Div.

I. Sperzel.

PRODUCT DATA SHEET 2 - Description: Heavy duty, elongated open front, stainless steel check hinge less cover compatible with water closet specified.

SCHEDULE 6 - PROTECTIVE SHIELDING GUARDS:

PRODUCT DATA SHEET 1 - Protective Shielding Pipe Covers, L-1:

2.1 Manufacturers: Subject to compliance with requirements, provide products by one of the following:

A. Engineered Brass Co.

B. Insul-Tect Products Co.; a Subsidiary of MVG Molded Products.

C. McGuire Manufacturing Co., Inc.

D. Plumberex Specialty Products Inc.

E. TCI Products.

F. TRUEBRO, Inc.

G. Zurn Plumbing Products Group; Tubular Brass Plumbing Products Operation.

2.2 Description: Manufactured plastic wraps for covering plumbing fixture hot- and cold-water supplies and trap and drain piping. Comply with Americans with Disabilities Act (ADA) requirements.

SCHEDULE 7 - FIXTURE SUPPORTS:

PRODUCT DATA SHEET 1 - Manufacturers: Subject to compliance with requirements, provide products by one of the following:

2.1 Josam Company.

2.2 MIFAB Manufacturing Inc.

2.3 Smith, Jay R. Mfg. Co.

2.4 Tyler Pipe; Wade Div.

2.5 Watts Drainage Products Inc.; a div. of Watts Industries, Inc.

2.6 Zurn Plumbing Products Group; Specification Drainage Operation.

SCHEDULE 8 - GARBAGE DISPOSAL

PRODUCT DATA SHEET 1 - Manufacturers: Subject to compliance with requirements, provide products by one of the following:

PRODUCT DATA SHEET 2 - Basis-of-Design Product: Subject to compliance with requirements, provide In-Sink-Erator; a div. of Emerson Electric Co. or a comparable product by one of the following:

2.1 American Standard Companies, Inc.

2.2 Franke Consumer Products, Inc.; Kitchen Systems Div.

2.3 KitchenAid.

2.4 Maytag Co

PRODUCT DATA SHEET 3 - Description: GD-1: Continuous-feed household, food-waste disposer. Include reset button; wall switch; corrosion-resistant chamber with jam-resistant, cutlery- or stainless-steel grinder or shredder; NPS 1-1/2 (DN 40) outlet; quick-mounting, stainless-steel sink flange; anti-splash guard; and combination cover/stopper.

2.1 Type: Continuous-feed household.

2.2 Model: See Sheet P0.1

2.3 Motor: 115-V ac, 1725 rpm, 1 hp with overload protection.

SCHEDULE 9 - WATER CLOSETS:

PRODUCT DATA SHEET 1 - Basis-of-Design Product: Subject to compliance with requirements, provide per Fixture Connection Schedule on Sheet P0.1 or a comparable product by one of the following:

2.1 Crane Plumbing, L.L.C./Fiat Products.

2.2 American Standard Companies, Inc.

2.3 Eljer.

2.4 Kohler Co.

PRODUCT DATA SHEET 2 - Flush Valve: WC-1: Vitreous china, siphon jet, 1.28 GPF, elongated bowl, floor mounted 1 ½" top spud.

PRODUCT DATA SHEET 3 - Flush Valve: WC-2: Vitreous china, siphon jet, 1.28 GPF, elongated bowl, floor mounted 1 ½" top spud, meets ADA requirements.

SCHEDULE 10 - LAVATORIES:

PRODUCT DATA SHEET 1 - Lavatories:

2.1 Basis-of-Design Product: Subject to compliance with requirements, provide per fixture connection schedule sheet P0.1 or a comparable product by one of the following:

A. Eljer.

B. Kohler Co.

C. American Standard Companies, Inc.

D. Crane Plumbing, L.L.C./Fiat Products.

2.2 av-1: Rectangular 19” x 17”, vitreous china, wall mounted with hanger, lavatory with overflow, ADA compliant. Provide faucet holes to match faucet.

2.3 Lav-2: Oval 20-1/4" x 17-1/2", vitreous china, counter mounted, lavatory with overflow. Provide faucet holes to match faucet.

2.4 Lav-3: Oval 20-1/4" x 17-1/2", vitreous china, counter mounted, lavatory with overflow. Provide faucet holes to match faucet.

SCHEDULE 11 - SINKS:

PRODUCT DATA SHEET 1 - Sinks:

2.1 Basis-of-Design Product: Subject to compliance with requirements, provide per Fixture Connection Schedule Sheet P0-1 or a comparable product by one of the following:

A. Advance Tabco.

B. Blancowave.

C. Just Manufacturing Company.

D. Metal Masters Foodservice Equipment Co., Inc.

E. Elkay.

2.2 S-1: 18 gauge type 304, stainless steel, self-rimming, fully undercoated, double compartment sink. For dimensions and hole configuration see Sheet P0.1.

2.3 KS-1: Furnished by others.

SCHEDULE 12 - SERVICE BASINS:

PRODUCT DATA SHEET 0 - Service Basins:

2.1 Basis-of-Design Product: Subject to compliance with requirements, provide per Fixture Connection Schedule Sheet P0-1 or a comparable product by one of the following:

A. Crane Plumbing, L.L.C./Fiat Products.

B. Florestone Products Co., Inc.

C. Mustee, E. L. & Sons, Inc.

D. Swan Corporation (The).

E. Zurn Plumbing Products Group; Light Commercial Operation.

2.2 JS-1: One piece precast terrazzo 36" x 36", shoulders shall be not less than 12" high outside and 10" inside at lowest walls, stainless steel caps on all curbs. 3" waste connection.

2.3 JS-3: Wall mounted 14 gauge type 304 stainless steel service sink with 12" high back splash, provide holes to match faucet. 23" wide by 18-1/2" front to back, 12" deep, 2" drain connection.

PART 3 - EXECUTION

SCHEDULE 1 - EXAMINATION:

PRODUCT DATA SHEET 1 - Examine roughing-in of water supply and sanitary drainage and vent piping systems to verify actual locations of piping connections before plumbing fixture installation.

PRODUCT DATA SHEET 2 - Examine cabinets, counters, floors, and walls for suitable conditions where fixtures will be installed.

PRODUCT DATA SHEET 3 - Proceed with installation only after unsatisfactory conditions have been corrected.

SCHEDULE 2 - INSTALLATION:

PRODUCT DATA SHEET 1 - Assemble plumbing fixtures, trim, fittings, and other components according to manufacturers' written instructions.

PRODUCT DATA SHEET 2 - Install off-floor supports, affixed to building substrate, for wall-mounting fixtures.

3.1 Use carrier supports with waste fitting and seal for back-outlet fixtures.

3.2 Use carrier supports without waste fitting for fixtures with tubular waste piping.

3.3 Use chair-type carrier supports with rectangular steel uprights for accessible fixtures.

PRODUCT DATA SHEET 3 - Install back-outlet, wall-mounting fixtures onto waste fitting seals and attach to supports.

PRODUCT DATA SHEET 4 - Install floor-mounting fixtures on closet flanges or other attachments to piping or building substrate.

PRODUCT DATA SHEET 5 - Install wall-mounting fixtures with tubular waste piping attached to supports.

PRODUCT DATA SHEET 6 - Install floor-mounting, back-outlet water closets attached to building floor substrate and wall bracket and onto waste fitting seals.

PRODUCT DATA SHEET 7 - Install counter-mounting fixtures in and attached to casework.

PRODUCT DATA SHEET 8 - Install fixtures level and plumb according to roughing-in drawings.

PRODUCT DATA SHEET 9 - Install water-supply piping with stop on each supply to each fixture to be connected to water distribution piping. Attach supplies to supports or substrate within pipe spaces behind fixtures. Install stops in locations where they can be easily reached for operation.

3.1 Exception: Use ball, gate, or globe valves if supply stops are not specified with fixture. Valves are specified in Division 15 Section "Valves."

PRODUCT DATA SHEET 10 - Install trap and tubular waste piping on drain outlet of each fixture to be directly connected to sanitary drainage system.

PRODUCT DATA SHEET 11 - Install tubular waste piping on drain outlet of each fixture to be indirectly connected to drainage system.

PRODUCT DATA SHEET 12 - Install flushometer valves for accessible water closets and urinals with handle mounted on wide side of compartment. Install other actuators in locations that are easy for people with disabilities to reach.

PRODUCT DATA SHEET 13 - Install toilet seats on water closets.

PRODUCT DATA SHEET 14 - Install faucet-spout fittings with specified flow rates and patterns in faucet spouts if faucets are not available with required rates and patterns. Include adapters if required.

PRODUCT DATA SHEET 15 - Install water-supply flow-control fittings with specified flow rates in fixture supplies at stop valves.

PRODUCT DATA SHEET 16 - Install faucet flow-control fittings with specified flow rates and patterns in faucet spouts if faucets are not available with required rates and patterns. Include adapters if required.

PRODUCT DATA SHEET 17 - Install shower flow-control fittings with specified maximum flow rates in shower arms.

PRODUCT DATA SHEET 18 - Install traps on fixture outlets.

3.1 Exception: Omit trap on fixtures with integral traps.

3.2 Exception: Omit trap on indirect wastes, unless otherwise indicated.

PRODUCT DATA SHEET 19 - Install disposer in outlet of each sink indicated to have disposer. Install switch where indicated or in wall adjacent to sink if location is not indicated.

PRODUCT DATA SHEET 20 - Install escutcheons at piping wall ceiling penetrations in exposed, finished locations and within cabinets and millwork. Use deep-pattern escutcheons if required to conceal protruding fittings. Escutcheons are specified in Division 22 Section "Basic Materials and Methods."

PRODUCT DATA SHEET 21 - Set service basins in leveling bed of cement grout. Grout is specified in Division 22 Section "Basic Plumbing Materials and Methods."

PRODUCT DATA SHEET 22 - Seal joints between fixtures and walls, floors, and countertops using sanitary-type, one-part, mildew-resistant silicone sealant. Match sealant color to fixture color. Sealants are specified in Division 7 Section "Joint Sealants."

SCHEDULE 3 - CONNECTIONS

PRODUCT DATA SHEET 1 - Piping installation requirements are specified in other Division 22 Sections. Drawings indicate general arrangement of piping, fittings, and specialties.

PRODUCT DATA SHEET 2 - Connect fixtures with water supplies, stops, and risers, and with traps, soil, waste, and vent piping. Use size fittings required to match fixtures.

PRODUCT DATA SHEET 3 - Ground equipment according to Division 26 Section "Grounding and Bonding."

PRODUCT DATA SHEET 4 - Connect wiring according to Division 26 Section "Conductors and Cables."

SCHEDULE 4 - FIELD QUALITY CONTROL

PRODUCT DATA SHEET 1 - Verify that installed plumbing fixtures are categories and types specified for locations where installed.

PRODUCT DATA SHEET 2 - Check that plumbing fixtures are complete with trim, faucets, fittings, and other specified components.

PRODUCT DATA SHEET 3 - Inspect installed plumbing fixtures for damage. Replace damaged fixtures and components.

PRODUCT DATA SHEET 4 - Test installed fixtures after water systems are pressurized for proper operation. Replace malfunctioning fixtures and components, then retest. Repeat procedure until units operate properly.

PRODUCT DATA SHEET 5 - Install fresh batteries in sensor-operated mechanisms.

SCHEDULE 5 - ADJUSTING

PRODUCT DATA SHEET 1 - Operate and adjust faucets and controls. Replace damaged and malfunctioning fixtures, fittings, and controls.

PRODUCT DATA SHEET 2 - Operate and adjust disposers and controls. Replace damaged and malfunctioning units and controls.

PRODUCT DATA SHEET 3 - Adjust water pressure at faucets and flushometer valves to produce proper flow and stream.

PRODUCT DATA SHEET 4 - Replace washers and seals of leaking and dripping faucets and stops.

PRODUCT DATA SHEET 5 - Install fresh batteries in sensor-operated mechanisms.

SCHEDULE 6 - CLEANING

PRODUCT DATA SHEET 1 - Clean fixtures, faucets, and other fittings with manufacturers' recommended cleaning methods and materials. Do the following:

3.1 Remove faucet spouts and strainers, remove sediment and debris, and reinstall strainers and spouts.

3.2 Remove sediment and debris from drains.

PRODUCT DATA SHEET 2 - After completing installation of exposed, factory-finished fixtures, faucets, and fittings, inspect exposed finishes and repair damaged finishes.

SCHEDULE 7 - PROTECTION

PRODUCT DATA SHEET 1 - Provide protective covering for installed fixtures and fittings.

PRODUCT DATA SHEET 2 - Do not allow use of plumbing fixtures for temporary facilities unless approved in writing by Owner.

END OF SECTION 22 40 00

SECTION 23 05 02 - BASIC HVAC REQUIREMENTS

PART 1 – GENERAL

1.1 RELATED DOCUMENTS

1.1.1 Drawings and general provisions of the Contract, including General and Supplementary Conditions and Division 01 Specification Sections, apply to this Section.

1.1.2 Where contradictions occur between this Section and Division 01, and between contract specifications and drawings, the most stringent of the two shall apply. The Owner's Representative shall decide which is most stringent.

1.1.3 All referenced and related provisions of Divisions 22 and 26 shall also apply to the work of this Section as if fully repeated herein.

1.1.4 Provisions of this Section shall also apply to all Division 23 work.

1.2 DEFINITIONS

1.2.1 The definitions of Division 01 and the General Conditions of the Specifications also apply to the Division 23 contract.

1.2.2 "Contract Documents" constitute the drawings, specifications, general conditions, project manuals, etc., prepared by engineer (or other design professional in association with engineer) for contractor's bid or contractor's negotiations with the Owner. The Division 23 drawings and specifications prepared by the engineer are not Construction Documents.

1.2.3 "Construction Documents", "construction drawings" and similar terms for Division 23 work refer to installation diagrams, shop drawings and coordination drawings prepared by the contractor using the design intent indicated on the Engineer's Contract Documents. These specifications detail the contractor's responsibility for "Engineering by Contractor" and for preparation of construction documents.

1.2.4 "(N)" indicates "new" equipment to be provided under this contract.

1.2.5 "(E)" indicates "existing" equipment on site which may or may not need to be relocated as part of this work.

1.2.6 "(R)" indicates existing equipment to be relocated as part of this work.

1.2.7 "Furnish" means to "supply" and usually refers to an item of equipment.

1.2.8 "Install" means to "set in place, connect and place in full operational order".

1.2.9 "Provide" means to "furnish and install".

1.2.10 "Equal" or "Equivalent" means "meets the specifications of the referenced product or item in all significant aspects". Significant aspects shall be as determined by the Owner's Representative.

1.2.11 "Work by other(s) Divisions", "re:_____ Division" and similar expressions mean work to be performed under the contract documents, but not necessarily under the Division of Section of the work on which the note appears. It is the contractor's sole responsibility to coordinate the work of the contract between his/her suppliers, subcontractors and employees. If clarification is required, consult Owner's Representative before submitting bid.

1.2.12 By inference, any reference to a "contractor" or "sub-contractor" means the entity, which has contracted with the Owner for the work of the Contract Documents.

1.2.13 "Engineer" means the design professional firm, which has preferred these prepared these contract documents. All questions, submittals, etc. of this Division shall be routed to the Engineer (through proper contractual channels).

1.2.14 "Low Voltage Control Wiring" refers to all wiring systems which are 24 volts or less.

1.3 COORDINATION WITHIN DIVISION 23

1.3.1 Contract Documents:

1.3.1.1 General: The Contract Documents are diagrammatic showing certain physical relationships, which must be established within Division 23 work and its interface with other work. Such establishment is the exclusive responsibility of the Contractor. Drawings shall not be scaled for the purpose of establishing dimensions, clearances or material quantities.

1.3.1.2 Supplemental Instructions: The exact location for some items in this Specification may not be shown on the Drawings. The location of such items may be established by the Owner's Representative during the progress of the work.

1.3.1.3 Discrepancies:

1.3.1.3.1 Examine Drawings and Specifications of all Divisions of the work.

1.3.1.3.2 Report any discrepancies to the Owner's Representative and obtain written instructions before proceeding.

1.3.1.3.3 Should there be a conflict within or between the Specifications or Drawings the most stringent or higher quality requirements shall apply.

1.3.1.3.4 Items called for either in the Specifications or on the Drawings shall be required as if called for in both.

1.3.1.3.5 Constructability:

1.3.1.3.5.1 Examine Drawings and Specifications of all Divisions of the work.

1.3.1.3.5.2 Report any issues to the Owner's Representative which may prevent installation of Division 23 work in accordance with the Contract Documents and the original construction contract.

1.3.2 Contractor shall be responsible for providing proper documentation of equipment product data and shop drawings to all entities providing service. This coordination shall include, but not be limited to the following:

1.3.2.1 Section 23 09 16, AUTOMATIC TEMPERATURE CONTROLS and Section 23 05 93, TESTING, ADJUSTING AND BALANCING, Contractors shall be provided with equipment product data and shop drawings as appropriate from other Division 23 and Divisions 26 and 28 contractors, and shall furnish the same information about control devices (such as valves, test wells, etc.) to the appropriate Division 23 contractor.

1.3.3 Coordination Drawings: Prepare coordination drawings in accordance with Division 01, Section "Submittals" to scale of 1/4" = 1'-0" or larger, detailing major elements, components, and systems of HVAC equipment (i.e. equipment rooms and exterior equipment areas) and materials in relationship with other systems, installations and building components. Indicate locations where space is limited for installation and access and where sequencing and coordination of installations are important to the efficient flow of the work, including (but not limited to) the following:

1.3.3.1 Indicate all ductwork, piping (HVAC, Plumbing and Fire Suppression), electrical equipment and conduits, structural and architectural elements in these areas as well.

1.3.3.2 Ductwork shop drawings shall include manual volume dampers, access doors, etc.

1.3.3.3 Sizes and locations of required concrete pads, piers, curbs and bases.

1.3.3.4 Provide all necessary sections and elements for clarification.

1.3.3.5 Indicate all seismic restraint and support systems to be used for all HVAC equipment throughout the project.

1.3.3.6 Ductwork and piping transitions from rooftop units to shafts or horizontal ducts.

1.3.3.7 Failure to produce or submit coordination drawings does not dismiss the Contractor's responsibility for translating the design intent of the Contract Documents into Construction Documents.

1.3.3.8 The coordination drawings shall include all trades with different colors representing different trades; and shall be signed off by all parties, but not limited to electrical, plumbing, fire protection, building automation and temperature control, and test and balance subcontractors, having work in the area. These drawings shall be submitted to the Owner's Representative for review and approval.

1.3.4 Cad Drawings: For the purposes of facilitating the Contractor's shop drawings and record drawings, electronic AutoCAD drawings are available from M-E Engineers, Inc.

1.3.5 Existing Conditions:

1.3.5.1 Before submitting proposals for this work, each bidder shall be familiar with plans and specifications and shall have examined the premises and understood the conditions under which they will be obliged to operate in performing their contract.

1.3.5.2 No allowances will be made subsequently in this connection, on behalf of the Contractor, for any error through negligence on their part.

1.3.5.3 Drawings of existing conditions may be available. Contractor is strongly encouraged to obtain relevant drawings to assist in his/her performance of the contract.

1.3.6 Utility Connections:

1.3.6.1 Coordinate the connection of HVAC system with utilities and services.

1.3.6.2 Comply with regulations of utility suppliers.

1.3.6.3 The contract documents indicate the available information on existing utilities and services, and on new services (if any) to be provided by utility companies and agencies.

1.3.6.3.1 Notify the Owner's Representative immediately if discrepancies are found.

1.3.6.4 Coordinate HVAC utility interruptions one week in advance in writing with the Owner's Representative and the Utility Company.

1.3.6.4.1 Plan work so that duration of the interruption is kept to a minimum.

1.4 COORDINATION WITH OTHER DIVISIONS

1.4.1 General:

1.4.1.1 Coordinate the Division 23 work with the progress of the work of the other trades.

1.4.1.2 Complete the entire installation as soon as the condition of the building will permit.

1.4.1.3 Contractor is responsible for coordination of their work with the Owner's facility staff engaged in building automation, commissioning of systems, fire alarm system, etc.

1.4.2 Coordination with Electrical Work: Refer to Section 26 05 00, BASIC ELECTRICAL REQUIREMENTS.

1.4.3 Cutting and Patching: Refer to Section 23 05 03, BASIC HVAC MATERIALS AND METHODS.

1.4.4 Chases, Inserts and Openings:

1.4.4.1 Provide measurements, drawings and layouts so that openings, inserts and chases in new construction can be built and coordinated as construction progresses.

1.4.4.2 Check sizes and locations of openings provided.

1.4.4.3 Any cutting and patching made necessary by failure to provide measurements, drawings and layouts at the proper time shall be done at no additional cost to the Owner.

1.4.5 Support Dimensions: Provide dimensions and drawings so that concrete bases and other equipment supports to be provided under other Sections of the Specifications can be built at the proper time.

1.5 ENGINEERING BY CONTRACTOR

1.5.1 The construction of this building requires the Contractor to design several systems of subsystems. All such designs shall be the complete responsibility of the Contractor.

1.5.2 Systems or subsystems which require responsibility by the Contractor and submitted to the Engineer for review include, but are not limited to:

1.5.2.1 Equipment, ductwork and piping supports, not detailed in the drawings.

1.5.2.2 Pipe and duct hangers and anchors not specified in these documents, or catalogued by the manufacturer.

1.5.2.3 Building Automation System (BAS).

1.5.2.4 Vibration Isolation/Seismic Restraint.

1.6 REGULATORY REQUIREMENTS

1.6.1 General:

1.6.1.1 Regulatory Compliance: Work performed under this Division shall comply with the latest currently adopted editions of Codes and Regulations including, but not limited to those listed below.

1.6.1.2 Minimum Requirements: The requirements of the Drawings and Specifications are the minimum that will be allowed, unless such requirements are exceeded by applicable Codes or Regulations, in which case the Code or Regulation requirement shall govern.

1.6.1.3 Code Changes: Should a code change occur between time of proposal and date of permit issue, and the Contractor has unnecessarily delayed the acquisition of permits, the Contractor shall hold the Owner free from additional expense resulting from such Code change.

1.6.2 Codes: Comply with the Currently Adopted (at Time of Contract Award) Following Codes:

1.6.2.1 City of San Diego Municipal Code, Ordinances and Regulations.

1.6.2.2 City of San Diego Fire Department Regulations and Requirements.

1.6.2.3 California Codes of Regulations, (CCR), Title 24, 2007 Edition.

1.6.2.4 California Building Code (CBC), 2007 Edition.

1.6.2.5 California Mechanical Code (CMC), 2007 Edition.

1.6.2.6 California Plumbing Code (CPC), 2007 Edition.

1.6.2.7 California Electrical Code (CEC), 2007 Edition.

1.6.2.8 California Fire Code (CFC), 2007 Edition.

1.6.2.9 San Diego County Department of Health Services Regulations and Requirements.

1.6.2.10 San Diego County Public Works Department Regulations and Requirements.

1.6.2.11 San Diego County Fire Department Regulations and Requirements.

1.6.2.12 National Electric Code (NEC), Latest Edition.

1.6.2.13 California Energy Commission, Title 24.

1.6.2.14 State Elevator Safety Regulations (SESR).

1.6.2.15 National Fire Protection Association NFPA-101, Life Safety Code, Latest Edition for JCAHO accreditation.

1.6.2.16 Occupational Safety and Health Administration Regulations and Requirements (OSHA).

1.6.2.17 California Occupational Safety and Health Administration Regulations and Requirements. (CAL-OSHA).

1.6.2.18 San Diego County Air Pollution Control District Regulations and Requirements (SDCAPCD).

1.6.2.19 American Disability Act Regulations and Requirements (ADA).

1.6.3 Comply with the Latest Editions of Applicable Regulations and Standards, Including:

1.6.3.1 National Fire Protection Associations (NFPA).

1.6.3.2 Underwriters Laboratories, Inc. (UL).

1.6.3.3 American National Standards Institute (ANSI).

1.6.3.4 American Society of Testing Materials (ASTM).

1.6.3.5 American Society of HVAC Engineers (ASME).

1.6.3.6 American Welding Society Code (AWSC).

1.6.3.7 American Water Works Association (AWWA).

1.6.3.8 Manufacturers Standardization Society (MSS).

1.6.3.9 National Bureau of Standards (NBS).

1.6.3.10 Sheet Metal and Air Conditioning Contractors National Association (SMACNA).

1.6.4 Requirements of Local Utility Companies: Comply with rules and regulations of local utility companies. Include in bid the cost of all valves, valve boxes, meter boxes, meters and such accessory equipment, which will be required for the project.

1.6.5 Markings on Controllers: All mechanical equipment furnished with a controller/starter shall be marked with electrical data per NEC Section 430.8.

1.6.6 Additional Regulations: Follow additional regulations which appear in individual Sections of Specifications.

1.6.7 Contradictions: Where codes are contradictory, follow the most stringent, unless otherwise indicated in Plans or Specifications. The Owner's Representative shall determine which is the most stringent.

1.6.8 Contract Documents Not in Compliance:

1.6.8.1 Where it is not noted that the Drawings and Specifications do not comply with the minimum requirements of the coeds, either notify the Owner's Representative in writing during the Bidding Period of the revisions required to meet Code Requirements. After entering into contract, Contractor will be held to complete all work necessary to meet Code Requirements without additional expense to the Owner.

1.6.8.2 Follow Drawings and Specifications where they are superior to Code Requirements.

1.6.9 Permits:

1.6.9.1 Contractor shall pay for and obtain all permits required by authorities and agencies having jurisdiction for the work in this Division.

1.6.9.2 Post permits as required.

1.6.10 Inspections and Tests:

1.6.10.1 Arrange for all required inspections and tests.

1.6.10.2 Pay all charges.

1.6.10.3 Notify the Owner's Representative in writing 72 hours before tests.

1.6.10.4 Submit one copy for Owner's record of permits. Licenses, inspection reports and test reports.

1.7 EQUIVALENTS AND SUBSTITUTIONS

1.7.1 The applicable paragraphs for General Requirements, Division 01 apply herein.

1.7.2 Basis of Design: The manufacturer's name and product listed on the drawings, or listed first of several names in these Specifications, is used as a basis for design to establish space requirements, a standard of quality and performance.

1.7.3 Equivalents: Products of one or more other manufacturer's names listed in these Specifications following the words "or equivalent by" may be selected, subject to paragraph below titled "Contractor's Responsibility for Equivalent and Substitutions".

1.7.4 Other Options:

1.7.4.1 For products specified by naming only one manufacturer, refer to paragraph below under "Substitutions".

1.7.4.2 For products specified only by performance characteristics or reference standards, select any manufacturer meeting the requirements.

1.7.5 Substitutions: Requests for acceptance of a product of manufacturer's name not listed in these Specifications will be considered if any one of the following conditions is met:

1.7.5.1 The named product is not available because of strikes or discontinuance of manufacture; and the proposed product is equivalent to the named product.

1.7.5.2 The proposed product is superior to the named product, in the opinion of the Owner's Representative.

1.7.5.3 The proposed product is equivalent to the named product and its use will be to the advantage of the Owner, by the Owner receiving an equitable credit or cost savings. The Owner's Representative reserves the right to reject any substitution.

1.7.5.4 Submit proposed substitutions with bid along with alternate price, complete descriptive data and a comparison of the substitute manufacturer's product with specified product. Request for acceptance of a product of manufacturer's name not listed in these Specifications, is subject to the paragraph titled "Contractor's Responsibility Equivalents and Substitutions".

1.7.6 Contractor's Responsibility for Equivalents and Substitutions:

1.7.6.1 Items submitted as a substitution to the Basis of Design or listed general equivalents shall be identified as such and shall include a written request for substitution indicating the following:

1.7.6.1.1 Contract Price adjustment.

1.7.6.1.2 Contract time adjustment.

1.7.6.1.3 Item by item breakdown of differences between Basis of Design and substituted item.

1.7.6.1.4 Operation, maintenance and energy cost difference.

1.7.6.2 Products of manufacturer must match the features, construction, performance and size of those selected for design. Standard catalogued may require certain modifications to meet specified requirements.

1.7.6.3 The responsibility for providing that specified requirements have been met remains with the manufacturer and Contractor. Should the substituted item fail to perform in accordance with the Specifications, replace same with the originally specified item without extra cost to the contract.

1.7.6.4 When requesting review of an equivalent or substituted product, submit a comparison chart listing features, construction, performance and sizes of name product versus equivalent or substituted product.

1.7.6.5 Submittals for review of an equivalent or substituted product will be reviewed for acceptability when all the above requirements have been met. Contractor shall be responsible for all costs incurred by the Architect and Engineer for review of equivalency beyond initial review.

1.7.6.6 Coordinate the installation of the product with all trades.

1.7.6.7 Contractor shall be responsible for changes in electric wiring, materials and for all other additional costs of construction by all trades involved to accommodate the product to perform the same as the product used in the "Basis of Design".

1.7.6.8 Coordination of General Equivalents and Substitutions: Where Contract Documents permits selection from general equivalents, or where substitutions are authorized, coordinate clearance and other interface requirements with HVAC and other work.

1.7.6.9 Provide necessary additional items so that selected or substituted item operates equivalent to the Basis of Design and properly fits in the available space allocated for the Basis of Design.

1.7.6.10 Contractor is responsible for assuring that piping, conduit, duct, flue and other service locations for general equivalents or substitutions do not cause access, service or operational difficulties any greater than would be encountered with the Basis of Design.

1.7.6.11 Failure to comply with these requirements will result in immediate rejection of the request for substitution.

1.8 GENERAL SUBMITTAL REQUIREMENTS

1.8.1 Refer to Division 01 for additional requirements.

1.8.2 Coordination and Sequencing:

1.8.2.1 Coordinate submittals 3 weeks (minimum) prior to expected order date so that work will not be delayed by submittals.

1.8.2.2 Do not submit product data, or allow its use on the project until compliance with requirement of Contract Documents has been confirmed by Contractor.

1.8.2.3 Submittal is for information and record, unless otherwise indicated, and is not a change order request.

1.8.2.4 Submitting contractor is responsible for routing reviewed submittals to all parties affected including but not limited to electrical, building automation and temperature control, and test and balance subcontractors.

1.8.2.5 Make submittals for group of similar products or materials such as valves, fixtures, pumps, air handling units, fans, insulation, etc. or area of work complete and at one time, not in piecemeal fashion.

1.8.2.6 Identify submittals with Architect's project name and number, with item designation as indicated on drawings, and referenced to applicable paragraphs of the specifications. Submit in brochure form.

1.8.2.7 Submittals of products needed to start of Project for its installation, or those requiring a long lead time for assembly or manufacturing, should be submitted before the others.

1.8.3 Preparations of Submittals:

1.8.3.1 Refer to Division 01 requirements.

1.8.3.2 Provide permanent marking on each submittal to identify project, date, Contractor, Subcontractor, Supplier, submittal name and similar information to distinguish it from other submittals.

1.8.3.3 Indicate any portions of work, which deviate from the Contract Documents.

1.8.3.3.1 Explain the reasons for the deviations.

1.8.3.3.2 Show how such deviations coordinate with interfacing portions of other work.

1.8.3.4 Show Contractor's executed review and approval marking.

1.8.3.5 Provide space for the Owner's Representative "Action" marking.

1.8.3.6 Submittals, which are received from sources other than through Contractor's office, will be returned "Without Action".

1.8.3.7 Submittals shall be presented in a neat and legible fashion and shall be returned "Without Action" if presented in any other fashion.

1.8.4 Quantities: Unless otherwise indicated in Division 01, submit six (6) copies.

1.8.4.1 Refer to Division 01 requirements.

1.8.4.2 Multiple System Items: Where a required submittal relates to an operational item of equipment used in more than one system, increase the number of final copies as necessary to complete the Maintenance Manuals for each system.

1.8.4.3 General Distribution:

1.8.4.3.1 Provide additional distribution of submittals (not included in foregoing copy submittal requirements) to Subcontractors, Suppliers, Fabricators, Installers, Governing Authorities and others as necessary for proper performance of the work.

1.8.4.3.1.1 Include such additional copies in transmittal to Owner's Representative where required to receive "Action" marking before final distribution.

1.8.4.3.1.1.1 Show such distributions on transmittal forms.

1.8.5 Response to Submittals: Where standard product data has been submitted, it is recognized:

1.8.5.1 That the Submitter has determined that the products fulfill the specified requirements.

1.8.5.2 That the submittal is for the Owner's Representative information only, but will be returned with appropriate action where observed to be not in compliance with the requirements.

1.8.6 If more than two submittals (either for shop drawings, or test and balance reports) are made by the Contractor due to the incompletion, non-compliance, errors, omissions, etc. the Owner reserves the right to charge the Contractor for subsequent reviews by their consultants. Such extra fees shall be deducted from payments by the Owner to the Contractor.

1.9 SPECIFIC CATEGORY SUBMITTAL REQUIREMENTS

1.9.1 Manufacturer's Data:

1.9.1.1 Where pre-printed data covers more than one distinct product, size, type, material, trim, accessory group or other variation, mark submitted copy with black ink to indicate which of the variations is to be provided.

1.9.1.2 Delete or mark-put significant portions of pre-printed data, which are not applicable.

1.9.1.3 Where operating ranges are shown, mark data to show portion of range required for project application.

1.9.1.4 For Each Product, Include the following:

1.9.1.4.1 sizes.

1.9.1.4.2 Weights.

1.9.1.4.3 Speeds.

1.9.1.4.4 Capacities.

1.9.1.4.5 Piping and electrical connection sizes and locations.

1.9.1.4.6 Statements of compliance with the required standards and regulations.

1.9.1.4.7 Performance data.

1.9.1.4.8 Manufacturer's specifications and installation instructions.

1.9.2 Shop Drawings:

1.9.2.1 Prepare HVAC shop drawings, except diagrams, to accurate scale.

1.9.2.1.1 Show clearance dimensions at critical locations.

1.9.2.1.2 Show dimensions of spaces required for operation and maintenance.

1.9.2.1.3 Show interfaces with other work, including structural support.

1.9.3 Test Reports:

1.9.3.1 Submit test reports, which have been signed and dated by the firm performing the test.

1.9.3.2 Prepare test reports in the manner specified in the standard or regulation governing the test procedure (if any) as indicated.

1.9.4 Required Equipment and Shop Drawing Submittals:

1.9.4.1 Provide a submittal schedule with bid.

1.9.4.2 Provide equipment submittals for each item of equipment specified or scheduled in the Contract Documents.

1.9.4.3 Submittal schedule shall show each item of equipment, applicable section of the Specifications where it is described, applicable drawing number and schedule name where it is scheduled, date of Contractor's proposed submittal to the Owner's Representative, required date of receive submittal from the Owner's Representative and schedule order date.

1.9.4.4 Provide a HVAC Shop Drawing Schedule for submission to the Owner's Representative with the Submitted Schedule. Refer to Paragraph 1.3 – Coordination Within Division 23, above.

1.10 COMPATIBILITY

1.10.1 General: Provide products, which are compatible with other products of the HVAC work, and with other work, requiring interface with the HVAC work.

1.10.2 Power Characteristics: Where power characteristics are not stated in Division 23 Sections, refer to the Sections of Division 26 and the Electrical Drawings for the power characteristics of each power driven item of HVAC equipment. Coordinate available power with Electrical Contractor before ordering equipment. HVAC Contractor shall be responsible for ordering equipment to meet the available power characteristics. If there is a conflict between Division 23 documents and Division 26 documents, provide a written notification to the Owner's Representative for direction. Do not order equipment prior to determining the proper electrical service. No contact cost adjustment will be allowed for equipment ordered in conflict with the available power characteristics.

1.11 RECORD DRAWINGS

1.11.1 Drawings:

1.11.1.1 Record of Project progress: Purchase from the Architect a complete set of reproducible contract drawings and maintain drawings available at the job site for inspection. Keep an accurate, legible and continuously updated record of installed locations and all project revisions other than revised

drawings issued by the Architect, including source and date of authorization. Utilize only contract drawing symbols for recording the work. Drawing notations to be sufficiently clear in the representation of the work, for utilization by a CADD operator (drafts person) who is not necessarily familiar with the installed work.

1.11.1.2 Record of Installation: At the conclusion of the work, deliver one (1) set of blue prints of the progress drawings to the Owner's Representative for review. Following the review, Contractor shall have incorporated by a competent CADD operator all of the installed data represented on the project progress drawings.

1.11.1.3 Include in Record Drawings the Following:

1.11.1.3.1 Revisions, including sketches, bulletins, change orders, written addenda and directives, clarifications and responses generated by requests for information (RFIs), regardless of source of the revision.

1.11.1.3.2 Location and configuration of equipment with related housekeeping pads.

1.11.1.3.3 Physical routing of ductwork, exposed and above ceilings with locations of fire dampers, combination fire/smoke dampers, smoke detectors, diffusers, registers, grilles, air terminal units, appurtenances, etc., plainly marked and identified.

1.11.1.3.4 Location of room thermostats, humidistats and sensors.

1.11.1.3.5 Physical routing of piping, underground, exposed and above ceiling with locations of valves and accessories plainly marked and identified.

1.11.1.3.6 Location of piping below building and on exterior, valves, manholes, appurtenances and stub outs dimensioned from buildings and permanent structures, both horizontally and vertically.

1.11.1.3.7 Location of wall and ceiling access panels.

1.11.2 Temperature Control Drawings:

1.11.2.1 Indicate As-Built Conditions of Work Under This Contract Including:

1.11.2.2 Ladder wiring diagram.

1.11.2.3 Schematic diagrams.

1.11.2.4 One line system diagram.

1.11.2.5 Schematic of equipment with control devices located and identified.

1.11.2.6 Wiring or tubing termination diagrams.

1.11.2.7 Floor plan indicating all device locations, panels, etc.

1.11.2.8 Control sequences.

1.11.3 Acceptance: As a condition for acceptance of the work, deliver two (2) sets of Auto CAD Latest Version CDs and one set of signed and dated reproducible drawings to the Owner's Representative and obtain a receipt.

1.12 OPERATING AND MAINTENANCE DATA

1.12.1 Refer to Division 01 requirements.

1.12.2 Submission:

1.12.2.1 Submit three typed and bound copies of Operating and Maintenance (O&M) Manuals prior to scheduling systems demonstrations for the Owner's Representative, as specified in Division 01.

1.12.2.2 Bind each Maintenance Manual in one or more vinyl covered, 3-ring binders, with pockets for folded drawings.

1.12.2.3 Mark the spine of each binder with system identification and volume number.

1.12.3 Required Contents:

1.12.3.1 Manuals shall have index with tab dividers for each major equipment section to facilitate locating information on a specific piece of equipment.

1.12.3.2 Identifying data within each section with drawing code numbers as they appear on Drawings and Specifications. Include as a minimum the following data:

1.12.3.2.1 Alphabetical list of system components, with the name, address and 24 hour telephone number of the company responsible for servicing each item during the first year of operation. Include point of contact for company.

1.12.3.2.2 Operating instructions for complete system including:

1.12.3.2.3 Emergency procedures for fire and failure of major equipment.

1.12.3.2.4 Major start, operation and shut down procedures.

1.12.3.2.5 Maintenance Instructions for Each Piece of Equipment Including:

1.12.3.2.5.1 Equipment lists.

1.12.3.2.5.2 Proper lubricants and lubricating instructions for each piece of equipment.

1.12.3.2.5.3 Necessary cleaning, replacement and/or adjustment schedule.

1.12.3.2.5.4 Product data.

1.12.3.2.5.5 Installation instructions.

1.12.3.2.5.6 Parts list.

1.12.3.2.5.7 Temperature control diagrams and O&M information as specified above (as-built).

1.12.3.2.6 Marked or changed prints locating concealed parts and variations from the original system design (as-built drawings).

1.12.3.2.7 Balancing report.

1.12.3.2.8 Valve schedule and associated piping schematics. See Section 230553, IDENTIFICATION FOR HVAC PIPING AND EQUIPMENT.

1.12.3.2.9 Copies of any extended equipment warranties which are greater than one year.

1.13 WARRANTIES

1.13.1 The warranty period is one year after Date of Acceptance.

1.13.1.1 During this period, provide labor and materials as required to repair or replace defects in the HVAC system at no additional cost to the Owner. Provide certificate with O&M Manual submittal, which guarantees same-day service response to Owner's call for all such warranty service.

1.13.1.2 Provide certificate for such items of equipment, which have warranties in excess of one year. Insert copies in O&M Manuals.

1.13.1.3 Provide extended manufacturers warranties to cover one full year from date of acceptance if standard warranty starts any time prior to that date.

1.13.1.4 Provide factory trained service personnel for all warranty work on the Building Automation and Automatic Temperature Control System.

1.13.1.5 At time of bid, submit additional costs for extended warranties for principal equipment (e.g. chillers, cooling towers, evaporative coolers, boilers, etc.).

1.13.2 Refer to Division 01 for additional requirements.

1.14 SPARE PARTS SPECIAL TOOLS

1.14.1 Deliver spare parts to the Owner's Representative and obtain receipts at the time operating instructions are given to the Owner's personnel.

1.14.2 Include the Following:

1.14.2.1 V-Belts: One complete set of each size.

1.14.2.2 Fuses: Each type used for all equipment utilizing fuses. Quantity 10%, but not less than two.

1.14.2.3 Pilot Light Lamps: Each type used on the project. Quantity of 10%, but not less than two.

1.14.2.4 Special Tools: Furnish special tools required for assembly, adjustment, setting or maintenance of equipment if such tool is not readily available on the commercial tool market.

1.14.2.5 Maintenance Paint: Furnish one can of touch-up paint for each different factory finish, which is to be the final finished surfaced of the product.

1.14.2.6 Alternate Parts: Under the individual HVAC sections, there are listed spare parts to be furnished under a bid alternate. Should the alternate be accepted, such spare parts shall be similarly delivered to the Owner.

1.15 SYSTEM ACCEPTANCE

1.15.1 Acceptance shall be contingent upon completion of final review and correction of all deficiencies. Satisfactory completion of the operational tests, which shall demonstrate compliance with all performance criteria, and the requirements of the Contract Documents.

1.15.2 Request a Final Review Prior to System Acceptance After Completion of the Following:

1.15.2.1 Installation of all systems required by Contract Documents.

1.15.2.2 Submission and acceptance of service manuals.

1.15.2.3 Identification.

1.15.2.4 Cleaning.

1.15.2.5 Satisfactory operation of all systems for a period of one week.

1.16 MANDATORY GOVERNING PROVISION

1.16.1 Omissions of words or phrases, such as “the Contractor shall”, “in conformity with”, “shall be”, “as noted on the Drawings”, “according to the Drawings”, “an”, the”, and “all” are intentional.

1.16.2 Omitted words or phrases shall be supplied by inference.

1.17 OWNER FURSHICH EQUIPMENT

1.17.1 All equipment called out in the Specifications or shown on the Drawings as "Owner Furnished Equipment" shall be installed and connected under this contract. Provide rough-ins for all future connections indicated, unless otherwise specifically indicated on the Drawings.

1.18 TEMPORARY FACILITIES

1.18.1 Light, heat, power, etc.

1.18.1.1 Contractor shall be responsible for providing temporary electricity, heat and other facilities as specified in Division 01.

1.18.1.2 Contractor shall be responsible for maintaining the equipment in an as-new condition. Equipment will not be turned over to the Owner until it is brought up to as-new condition.

1.18.1.3 Contractor shall be responsible for maintaining acceptable indoor air quality in adjacent occupied spaces.

1.18.2 Use of permanent building for temporary heating or cooling.

1.18.2.1 Permanent building equipment shall not be used without written permission form the Owner's Representative. If this equipment is used for temporary heating, cooling, or ventilation, it shall be adequately maintained per manufacturer's instructions and protected with filters, strainers, controls, relief, etc. The Contractor shall protect all equipment and systems as directed by the Owner's Representative. The warranty period shall not start until the equipment is turned over to the Owner for his/her use. The Contractor shall provide extended warranties for parts and labor for such equipment. Equipment shall not be turned over to the Owner until the temperature controls have been tested and accepted by the Owner's Representative.

1.19 SAFETY PROVISIONS

1.19.1 Equipment Nameplates: Provide power-oriented HVAC equipment with a permanent nameplate attached by the manufacturer, indicated:

1.19.1.1 The manufacturer.

1.19.1.2 Product name.

1.19.1.3 Model number.

1.19.1.4 Serial number.

1.19.1.5 Speed.

1.19.1.6 Capacity.

1.19.1.7 Power characteristics.

1.19.1.8 Labels of testing, or inspecting agencies

1.19.1.9 Other similar data.

1.19.2 Where manufacturer affixed nameplate is not available, Contractor shall fabricate and attach nameplate.

1.19.3 Guards:

1.19.3.1 Unless equivalent guards are provided integral with the equipment, enclose each belt drive (including sheaves) on both sides in a galvanized, one inch, mesh screen of No. 18 gauge steel wire or expanded metal, fastened to an approved, structural steel frame, securely fastened to the equipment or floor.

1.19.3.2 Provide tachometer holes at shaft centers. Unless equivalent guards are provided integral with the equipment, install a solid guard of No. 20 gauge galvanized steel over the coupling of each item of direct-driven equipment.

1.19.3.3 Sides are not required on these guards except to ensure rigidity.

PART 2 PRODUCTS (Not Used)

PART 3 EXECUTION

3.1 INSTALLATION GENERAL REQUIREMENTS

3.1.1 Furnish, apply, install, connect, erect, clean, and condition manufactured materials and equipment as recommended in manufacturer's printed directions (maintained on job site during installation).

3.1.2 Provide all attachment devices and materials as necessary to secure materials together or to other materials.

3.1.3 Make allowances for ample and normal expansion and contraction for all building components and piping systems that are subject to such.

3.1.4 Install materials only when conditions of temperature, moisture, humidity and conditions of adjacent building components are conductive to achieving the best installation results.

3.1.5 Erect, install and secure components in a structurally sound and appropriate manner.

3.1.6 Where necessary, temporarily brace, shore, or otherwise support members until final connections are installed.

3.1.7 Leave all temporary bracing, shoring, or other structural supports in place as long as practical for safety and to maintain proper alignment.

3.1.8 Handle materials in a manner to prevent scratching, abrading, distortion, chipping, breaking, or other disfigurement.

3.1.9 Conduct work in a manner to avoid injury or damage to previously placed work.

3.1.10 Any work so impaired or damaged shall be replaced at no expense to Owner.

3.1.11 Fabricate and install materials true to line, plumb and level.

3.1.12 Leave finished surfaces smooth and flat, free from wrinkles, wraps, scratches, dents and other imperfections.

3.1.13 Furnish materials in longest practical lengths and largest practical sizes to avoid all unnecessary jointing.

3.1.14 Make all joints secure, tightly fitted, and as inconspicuous as possible by the best accepted practice in joinery and fabrication.

3.1.15 Consult the Owner's Representative for mounting height or position of any unit not specifically indicated or located on Drawings or specified in Specifications.

3.1.16 Job mixed multi-component materials used in the work shall be mixed in such regulated and properly sized batches that material can be used before it begins to 'set".

3.1.17 Mixing of a partially 'set' batch with another batch of fresh materials will not be accepted and entire batch shall be discarded and removed from site.

3.1.18 Clean all mixing tools and appliances that can be contaminated prior to mixing of fresh materials.

3.1.19 In addition to the above, refer to each Section of the Specifications for additional installation requirements for the proper completion of all work.

3.2 COORDIANTION OF HVAC INSTALLATION

3.2.1 Inspection and Preparation:

3.2.1.1 Examine the work interfacing with HVAC work, and the conditions under which the work will be performed, and notify the Owner's Representative of conditions detrimental to the proper completion of the work at original contract price.

3.2.1.2 Do not proceed with the work until unsatisfactory conditions have been corrected.

3.2.2 Layout:

3.2.2.1 Layout the HVAC work in conformity with the Contract Drawings, Coordination Drawings and other Shop Drawings, product data and similar requirements so that the entire HVAC plant will perform as an integrated system, properly interfaced with other work recognizing that portions of the work are shown only in diagrammatic form.

3.2.2.2 Where coordination requirements conflict with individual system requirements, comply with the Owner's Representative decision on resolution of the conflict.

3.2.2.3 Take necessary field measurements to determine space and connection requirements.

3.2.2.4 Provide sizes and shapes of equipment so the final installation conforms to the intent of the Contract Documents.

3.2.2.5 Provide necessary fittings to create offsets as required to coordinate with building structure and other trades, even if fittings are not shown on the Contract Drawings.

3.2.3 Integrate the HVAC work in ceiling spaces with suspension system, light fixtures and other work, so that required performance of each will be achieved.

3.3 PRODUCT INSTALLATION

3.3.1 Manufacturer's Instructions:

3.3.1.1 Except. Where more stringent requirements are indicated, comply with the product manufacturer's instructions and recommendations.

3.3.1.2 Consult with manufacturer's technical representatives, who are recognized as technical experts, for specific instructions on special projects conditions.

3.3.1.3 If conflict exists, notify the Owner's Representative in writing and obtain his instruction before proceeding with the work in question.

3.3.2 Movement of Equipment:

3.3.2.1 Wherever possible, arrange for the movement and positioning of equipment so that enclosing partitions, walls and roofs will not be delayed or need to be removed.

3.3.2.2 Otherwise, advise Contractor of opening requirements to be maintained for the subsequent entry of equipment.

3.3.3 Heavy Equipment:

3.3.3.1 Coordinate the movement of heavy items with shoring and bracing so that the building structure will not be overloaded during the movement and installation.

3.3.3.2 Where HVAC products to be installed on the existing roof are too heavy to be hand-carried, do not transport across the existing roof deck. Position by crane or other device so as to avoid overloading or otherwise damaging the roof deck.

3.3.4 Clearances:

3.3.4.1 Install Piping and Ductwork:

3.3.4.1.1 Straight and true.

3.3.4.1.2 Aligned with other work.

3.3.4.1.3 Close to walls and overhead structure (allowing for insulation).

3.3.4.1.4 Concealed, where possible, in occupied spaces.

3.3.4.1.5 Out-of-the-way with maximum passageway and headroom remaining in each space.

3.3.4.2 Do not obstruct windows, doors and other openings.

3.3.4.3 Give the right-of-way to piping systems required to slope for drainage (over other service lines and ductwork).

3.3.5 Access:

3.3.5.1 Provide for Removal, without Damage to Other Parts, of:

3.3.5.1.1 Coils.

3.3.5.1.2 Shafts.

3.3.5.1.3 Fan wheels.

3.3.5.1.4 Drives.

3.3.5.1.5 Filters.

3.3.5.1.6 Strainers.

3.3.5.1.7 Bearings.

3.3.5.1.8 Control components.

3.3.5.1.9 Other parts requiring periodic replacement or maintenance.

3.3.5.2 Connect equipment for ease of disconnecting with minimum of interface with other work.

3.3.5.3 Provide unions where required.

3.3.5.4 Locate operating and control equipment and devices for easy access.

3.3.5.5 Provide access panels where equipment or devices are concealed by non-accessible finishes and similar work. See Section 230503, BASIC HVAC MATERIALS AND METHODS.

3.3.5.6 Ensure grease fittings for equipment are readily visible and accessible. Extend fittings when necessary.

3.4 PROTECTION OF WORK

3.4.1 Provide protection against dust migration, rain, wind, storms, frost, or heat so as to maintain all work, materials, apparatus and fixtures free from injury or damage.

3.4.2 At the end of each day's work, cover all new work likely to be damaged.

3.4.3 Do not interrupt the integrity of the building security overnight.

3.4.4 Refer to Division 01 for additional requirements.

3.4.5 All pipe ends, valves, ducts and equipment left unconnected shall be capped, plugged or otherwise properly protected to prevent damage and the intrusion of foreign matter.

3.4.6 Do not allow any fans in HVAC system to operate before the area served by the fan has been cleaned and vacuumed of all debris and dust which might enter the system. If any air handling system is to be used for temporary heating, cooling or ventilating as stated in Paragraph "Temporary Facilities" herein; a construction filter with minimum 20% efficiency must be provide at each return air grille and opening.

3.4.7 Any equipment, duct or piping systems found to have been damaged or contaminated above "MILL" or "SHOP" conditions shall be replaced or cleaned to the Owner's Representative's satisfaction.

3.4.8 Provide initial water seal fill for all condensate traps, or similar traps.

3.5 OBJECTIONABLE NOISE AND VIBRATION

3.5.1 HVAC equipment and piping system shall operate without objectionable noise and vibration, as determined by the judgment of the Owner's Representative.

3.5.2 If objectionable noise and vibration should be produced, make necessary changes or additions required to produce satisfactory result without additional cost to the Owner.

3.6 CLOSING-IN OF UN-INSPECTED WORK.

3.6.1 Do not allow or cause any work to be covered up or enclosed until inspected, tested and approved.

3.6.2 Should any work be enclosed or covered up before such inspection and test, Contractor shall, at his/her own expense, uncover work and after it has been inspected, tested and approved, make repairs with such materials as necessary to restore his/her work and that of other Divisions to original and proper condition.

3.7 CLEANING

3.7.1 After installation is complete, clean all systems as indicated below.

3.7.2 Ductwork, Piping and Equipment To Be Insulated: Clean exterior thoroughly to remove rust, plaster, cement and dirt before insulation is applied.

3.7.3 Ductwork, Piping and Equipment To Be Un-insulated: Clean exterior thoroughly to remove rust, plaster, cement, dirt and other foreign substances.

3.7.4 Ductwork, Piping and Equipment To Be Painted: Clean exterior to be exposed in completed structure. Remove rust, plaster, cement and dirt by wire brushing. Remove grease, oil and other foreign materials by wiping with clean rags and suitable solvents.

3.7.5 During Progress of Work: Carefully clean up the premises and keep all portions of the building free of debris.

3.7.6 Chrome or Nickel Plated Work: Thoroughly polish.

3.8 DAMAGE RESPONSIBILITY

3.8.1 Contractor shall be responsible for damage to the grounds, buildings or equipment and the loss of refrigerants, fuels or gases, caused by leaks or breaks in pipes for equipment furnished or installed under this Division.

3.9 PRELIMINARY OPERATION

3.9.1 The Owner's Representative reserves the right to operate portions of the HVAC system on a preliminary basis without voiding the guarantee or relieving the Contractor of his/her responsibilities.

3.10 OPERATION TESTS

3.10.1 Before operational tests are performed, demonstrate to the Owner's Representative that systems and components are complete and fully charged with operating fluid and lubricants. Systems shall be operable and capable of maintaining continuous uninterrupted operation during the operating and demonstration period.

3.10.2 After systems have been completely installed, connections made, and tests completed, operate the systems continuously for a period of five working days during the hours of a normal working day.

3.10.3 Control system shall be completely operable with settings properly calibrated and adjusted.

3.10.4 Rotating equipment shall be in dynamic balance and alignment.

3.10.5 Tests required in various sections herein shall be completed.

3.10.6 Notify the Owner's Representative, in writing two weeks in advance of this operational period.

3.10.7 This operational test may be concurrent with instruction of the Owner's operating personnel.

3.11 COMPLIANCE TESTS

3.11.1 Conduct tests for individual components, such as chiller, boiler, cooling tower, air handling unit, air terminal units, fans, etc. of all portions of the installation as may be required by the various Sections of this Division to comply with the Contract Documents. Tests shall be made in the presence of the Owner's Representative. Costs of tests shall be borne by the Contractor. Contractor shall provide all instruments, equipment, labor and materials to complete the tests. These tests may be required at any time between the installation of the work and the end of the warranty period. Should these tests expose any defective materials, poor workmanship or variance with requirements of the Contract Documents, Contractor shall make any changes necessary and remedy any defects at no cost to the Owner.

END OF SECTION 23 05 02

SECTION 23 05 03 - BASIC HVAC MATERIALS AND METHODS

PART 1 - GENERAL

SCHEDULE 1 - RELATED DOCUMENTS

PRODUCT DATA SHEET 1 - Drawings and general provisions of the Contract, including General and Supplementary Conditions and Division 1 Specification Sections, apply to this Section.

SCHEDULE 2 - SUMMARY

PRODUCT DATA SHEET 1 - This Section includes the following:

1.1 Piping materials and installation instructions common to most piping systems.

1.2 Transition fittings.

1.3 Dielectric fittings.

1.4 Mechanical sleeve seals.

1.5 Sleeves.

1.6 Escutcheons.

1.7 Grout.

1.8 Equipment installation requirements common to equipment sections.

1.9 Painting and finishing.

1.10 Concrete bases.

1.11 Supports and anchorages.

SCHEDULE 3 - DEFINITIONS

PRODUCT DATA SHEET 1 - Finished Spaces: Spaces other than mechanical and electrical equipment rooms, furred spaces, pipe and duct shafts, unheated spaces immediately below roof, spaces above ceilings, unexcavated spaces, crawlspaces, and tunnels.

PRODUCT DATA SHEET 2 - Exposed, Interior Installations: Exposed to view indoors. Examples include finished occupied spaces and mechanical equipment rooms.

PRODUCT DATA SHEET 3 - Exposed, Exterior Installations: Exposed to view outdoors or subject to outdoor ambient temperatures and weather conditions. Examples include rooftop locations.

PRODUCT DATA SHEET 4 - Concealed, Interior Installations: Concealed from view and protected from physical contact by building occupants. Examples include above ceilings and in duct shafts.

PRODUCT DATA SHEET 5 - Concealed, Exterior Installations: Concealed from view and protected from weather conditions and physical contact by building occupants but subject to outdoor ambient temperatures. Examples include installations within unheated shelters.

PRODUCT DATA SHEET 6 - The following are industry abbreviations for plastic materials:

1.1 Retain abbreviations that remain after this Section has been edited.

1.2 ABS: Acrylonitrile-butadiene-styrene plastic.

1.3 CPVC: Chlorinated polyvinyl chloride plastic.

1.4 PE: Polyethylene plastic.

1.5 PVC: Polyvinyl chloride plastic.

PRODUCT DATA SHEET 7 - The following are industry abbreviations for rubber materials:

1.1 EPDM: Ethylene-propylene-diene terpolymer rubber.

1.2 NBR: Acrylonitrile-butadiene rubber.

SCHEDULE 4 - SUBMITTALS

PRODUCT DATA SHEET 1 - Product Data: For the following:

1.1 Adjust list below to suit Project.

1.2 Transition fittings.

1.3 Dielectric fittings.

1.4 Mechanical sleeve seals.

1.5 Escutcheons.

PRODUCT DATA SHEET 2 - Welding certificates.

SCHEDULE 5 - QUALITY ASSURANCE

PRODUCT DATA SHEET 1 - Steel Support Welding: Qualify processes and operators according to AWS D1.1, "Structural Welding Code--Steel."

PRODUCT DATA SHEET 2 - Steel Pipe Welding: Qualify processes and operators according to ASME Boiler and Pressure Vessel Code: Section IX, "Welding and Brazing Qualifications."

1.1 Comply with provisions in ASME B31 Series, "Code for Pressure Piping."

1.2 Certify that each welder has passed AWS qualification tests for welding processes involved and that certification is current.

PRODUCT DATA SHEET 3 - Electrical Characteristics for Mechanical Equipment: Equipment of higher electrical characteristics may be furnished provided such proposed equipment is approved in writing and connecting electrical services, circuit breakers, and conduit sizes are appropriately modified. If minimum energy ratings or efficiencies are specified, equipment shall comply with requirements.

SCHEDULE 6 - DELIVERY, STORAGE, AND HANDLING

PRODUCT DATA SHEET 1 - Deliver pipes and tubes with factory-applied end caps. Maintain end caps through shipping, storage, and handling to prevent pipe end damage and to prevent entrance of dirt, debris, and moisture.

PRODUCT DATA SHEET 2 - Store plastic pipes protected from direct sunlight. Support to prevent sagging and bending.

SCHEDULE 7 - COORDINATION

PRODUCT DATA SHEET 1 - Arrange for pipe spaces, chases, slots, and openings in building structure during progress of construction, to allow for mechanical installations.

PRODUCT DATA SHEET 2 - Coordinate installation of required supporting devices and set sleeves in poured-in-place concrete and other structural components as they are constructed.

PRODUCT DATA SHEET 3 - Coordinate requirements for access panels and doors for mechanical items requiring access that are concealed behind finished surfaces. Access panels and doors are specified in Division 8 Section "Access Doors and Frames."

PART 2 - PRODUCTS

SCHEDULE 1 - MANUFACTURERS

PRODUCT DATA SHEET 1 - In other Part 2 articles where subparagraph titles below introduce lists, the following requirements apply for product selection:

2.1 Manufacturers: Subject to compliance with requirements, provide products by the manufacturers specified.

SCHEDULE 2 - PIPE, TUBE, AND FITTINGS

PRODUCT DATA SHEET 1 - Refer to individual Division 22 piping Sections for pipe, tube, and fitting materials and joining methods.

PRODUCT DATA SHEET 2 - Pipe Threads: ASME B1.20.1 for factory-threaded pipe and pipe fittings.

SCHEDULE 3 - JOINING MATERIALS

PRODUCT DATA SHEET 1 - Refer to individual Division 22 piping Sections for special joining materials not listed below.

PRODUCT DATA SHEET 2 - Pipe-Flange Gasket Materials: Suitable for chemical and thermal conditions of piping system contents.

2.1 ASME B16.21, nonmetallic, flat, asbestos-free, 1/8-inch (3.2-mm) maximum thickness unless thickness or specific material is indicated.

A. Full-Face Type: For flat-face, Class 125, cast-iron and cast-bronze flanges.

B. Narrow-Face Type: For raised-face, Class 250, cast-iron and steel flanges.

2.2 AWWA C110, rubber, flat face, 1/8 inch (3.2 mm) thick, unless otherwise indicated; and full-face or ring type, unless otherwise indicated.

PRODUCT DATA SHEET 3 - Flange Bolts and Nuts: ASME B18.2.1, carbon steel, unless otherwise indicated.

PRODUCT DATA SHEET 4 - Plastic, Pipe-Flange Gasket, Bolts, and Nuts: Type and material recommended by piping system manufacturer, unless otherwise indicated.

PRODUCT DATA SHEET 5 - Solder Filler Metals: ASTM B 32, lead-free alloys. Include water-flushable flux according to ASTM B 813.

PRODUCT DATA SHEET 6 - Brazing Filler Metals: AWS A5.8, BCuP Series, copper-phosphorus alloys for general-duty brazing, unless otherwise indicated; and AWS A5.8, BAg1, silver alloy for refrigerant piping, unless otherwise indicated.

PRODUCT DATA SHEET 7 - Welding Filler Metals: Comply with AWS D10.12 for welding materials appropriate for wall thickness and chemical analysis of steel pipe being welded.

PRODUCT DATA SHEET 8 - Solvent Cements for Joining Plastic Piping:

2.1 ABS Piping: ASTM D 2235.

2.2 CPVC Piping: ASTM F 493.

2.3 PVC Piping: ASTM D 2564. Include primer according to ASTM F 656.

2.4 PVC to ABS Piping Transition: ASTM D 3138.

PRODUCT DATA SHEET 9 - Fiberglass Pipe Adhesive: As furnished or recommended by pipe manufacturer.

SCHEDULE 4 - TRANSITION FITTINGS

PRODUCT DATA SHEET 1 - AWWA Transition Couplings: Same size as, and with pressure rating at least equal to and with ends compatible with, piping to be joined.

2.1 Manufacturers:

A. Cascade Waterworks Mfg. Co.

B. Dresser Industries, Inc.; DMD Div.

C. Ford Meter Box Company, Incorporated (The); Pipe Products Div.

D. JCM Industries.

E. Smith-Blair, Inc.

F. Viking Johnson.

2.2 Underground Piping NPS 1-1/2 (DN 40) and Smaller: Manufactured fitting or coupling.

2.3 Underground Piping NPS 2 (DN 50) and Larger: AWWA C219, metal sleeve-type coupling.

2.4 Aboveground Pressure Piping: Pipe fitting.

PRODUCT DATA SHEET 2 - Plastic-to-Metal Transition Fittings: PVC one-piece fitting with manufacturer's Schedule 80 equivalent dimensions; one end with threaded brass insert, and one solvent-cement-joint end.

2.1 Manufacturers:

A. Eslon Thermoplastics.

PRODUCT DATA SHEET 3 - Plastic-to-Metal Transition Adaptors: One-piece fitting with manufacturer's SDR 11 equivalent dimensions; one end with threaded brass insert, and one solvent-cement-joint end.

2.1 Manufacturers:

A. Thompson Plastics, Inc.

PRODUCT DATA SHEET 4 - Plastic-to-Metal Transition Unions: MSS SP-107, PVC four-part union. Include brass end, solvent-cement-joint end, rubber O-ring, and union nut..

2.1 Manufacturers:

A. NIBCO INC.

B. NIBCO, Inc.; Chemtrol Div.

PRODUCT DATA SHEET 5 - Flexible Transition Couplings for Underground Non-pressure Drainage Piping: ASTM C 1173 with elastomeric sleeve, ends same size as piping to be joined, and corrosion-resistant metal band on each end.

2.1 Manufacturers:

A. Cascade Waterworks Mfg. Co.

B. Fernco, Inc.

C. Mission Rubber Company.

D. Plastic Oddities, Inc.

SCHEDULE 5 - DIELECTRIC FITTINGS

PRODUCT DATA SHEET 1 - Description: Combination fitting of copper alloy and ferrous materials with threaded, solder-joint, plain, or weld-neck end connections that match piping system materials.

PRODUCT DATA SHEET 2 - Insulating Material: Suitable for system fluid, pressure, and temperature.

PRODUCT DATA SHEET 3 - Dielectric Unions: Factory-fabricated, union assembly, for 250-psig (1725-kPa) minimum working pressure at 180 deg F (82 deg C).

2.1 Manufacturers:

A. Capitol Manufacturing Co.

B. Central Plastics Company.

C. Eclipse, Inc.

D. Epco Sales, Inc.

E. Hart Industries, International, Inc.

F. Watts Industries, Inc.; Water Products Div.

G. Zurn Industries, Inc.; Wilkins Div.

PRODUCT DATA SHEET 4 - Dielectric Flanges: Factory-fabricated, companion-flange assembly, for 150- or 300-psig (1035- or 2070-kPa) minimum working pressure as required to suit system pressures.

2.1 Manufacturers:

A. Capitol Manufacturing Co.

B. Central Plastics Company.

C. Epco Sales, Inc.

D. Watts Industries, Inc.; Water Products Div.

PRODUCT DATA SHEET 5 - Dielectric-Flange Kits: Companion-flange assembly for field assembly. Include flanges, full-face- or ring-type neoprene or phenolic gasket, phenolic or polyethylene bolt sleeves, phenolic washers, and steel backing washers.

2.1 Manufacturers:

A. Advance Products & Systems, Inc.

B. Calpico, Inc.

C. Central Plastics Company.

D. Pipeline Seal and Insulator, Inc.

2.2 Separate companion flanges and steel bolts and nuts shall have 150- or 300-psig (1035- or 2070-kPa) minimum working pressure where required to suit system pressures.

PRODUCT DATA SHEET 6 - Dielectric Couplings: Galvanized-steel coupling with inert and noncorrosive, thermoplastic lining; threaded ends; and 300-psig (2070-kPa) minimum working pressure at 225 deg F (107 deg C).

2.1 Manufacturers:

A. Calpico, Inc.

B. Lochinvar Corp.

PRODUCT DATA SHEET 7 - Dielectric Nipples: Electroplated steel nipple with inert and noncorrosive, thermoplastic lining; plain, threaded, or grooved ends; and 300-psig (2070-kPa) minimum working pressure at 225 deg F (107 deg C).

2.1 Manufacturers:

A. Perfection Corp.

B. Precision Plumbing Products, Inc.

C. Sioux Chief Manufacturing Co., Inc.

D. Victaulic Co. of America.

SCHEDULE 6 - MECHANICAL SLEEVE SEALS

PRODUCT DATA SHEET 1 - Description: Modular sealing element unit, designed for field assembly, to fill annular space between pipe and sleeve.

2.1 Manufacturers:

A. Advance Products & Systems, Inc.

B. Calpico, Inc.

C. Metraflex Co.

D. Pipeline Seal and Insulator, Inc.

2.2 Sealing Elements: EPDM or NBR interlocking links shaped to fit surface of pipe. Include type and number required for pipe material and size of pipe.

2.3 Pressure Plates: Carbon steel or stainless steel. Include two for each sealing element.

2.4 Connecting Bolts and Nuts: Carbon steel with corrosion-resistant coating or stainless steel of length required to secure pressure plates to sealing elements. Include one for each sealing element.

SCHEDULE 7 - SLEEVES

PRODUCT DATA SHEET 1 - Galvanized-Steel Sheet: 0.0239-inch (0.6-mm) minimum thickness; round tube closed with welded longitudinal joint.

PRODUCT DATA SHEET 2 - Steel Pipe: ASTM A 53, Type E, Grade B, Schedule 40, galvanized, plain ends.

PRODUCT DATA SHEET 3 - Cast Iron: Cast or fabricated "wall pipe" equivalent to ductile-iron pressure pipe, with plain ends and integral waterstop, unless otherwise indicated.

PRODUCT DATA SHEET 4 - Stack Sleeve Fittings: Manufactured, cast-iron sleeve with integral clamping flange. Include clamping ring and bolts and nuts for membrane flashing.

2.1 Underdeck Clamp: Clamping ring with set screws.

PRODUCT DATA SHEET 5 - Molded PVC: Permanent, with nailing flange for attaching to wooden forms.

PRODUCT DATA SHEET 6 - PVC Pipe: ASTM D 1785, Schedule 40.

PRODUCT DATA SHEET 7 - Molded PE: Reusable, PE, tapered-cup shaped, and smooth-outer surface with nailing flange for attaching to wooden forms.

SCHEDULE 8 - ESCUTCHEONS

PRODUCT DATA SHEET 1 - Description: Manufactured wall and ceiling escutcheons and floor plates, with an ID to closely fit around pipe, tube, and insulation of insulated piping and an OD that completely covers opening.

PRODUCT DATA SHEET 2 - One-Piece, Deep-Pattern Type: Deep-drawn, box-shaped brass with polished chrome-plated finish.

PRODUCT DATA SHEET 3 - One-Piece, Cast-Brass Type: With set screw.

2.1 Finish: Polished chrome-plated.

PRODUCT DATA SHEET 4 - Split-Casting, Cast-Brass Type: With concealed hinge and set screw.

2.1 Finish: Polished chrome-plated.

PRODUCT DATA SHEET 5 - One-Piece, Stamped-Steel Type: With set screw and chrome-plated finish.

PRODUCT DATA SHEET 6 - Split-Plate, Stamped-Steel Type: With concealed hinge, set screw, and chrome-plated finish.

PRODUCT DATA SHEET 7 - One-Piece, Floor-Plate Type: Cast-iron floor plate.

PRODUCT DATA SHEET 8 - Split-Casting, Floor-Plate Type: Cast brass with concealed hinge and set screw.

SCHEDULE 9 - GROUT

PRODUCT DATA SHEET 1 - Description: ASTM C 1107, Grade B, non-shrink and nonmetallic, dry hydraulic-cement grout.

2.1 Characteristics: Post-hardening, volume-adjusting, nonstaining, noncorrosive, nongaseous, and recommended for interior and exterior applications.

2.2 Design Mix: 5000-psi (34.5-MPa), 28-day compressive strength.

2.3 Packaging: Premixed and factory packaged.

PART 3 - EXECUTION

SCHEDULE 1 - PIPING SYSTEMS - COMMON REQUIREMENTS

PRODUCT DATA SHEET 1 - Install piping according to the following requirements and Division 22 Sections specifying piping systems.

PRODUCT DATA SHEET 2 - Drawing plans, schematics, and diagrams indicate general location and arrangement of piping systems. Indicated locations and arrangements were used to size pipe and calculate friction loss, expansion, pump sizing, and other design considerations. Install piping as indicated unless deviations to layout are approved on Coordination Drawings.

PRODUCT DATA SHEET 3 - Install piping in concealed locations, unless otherwise indicated and except in equipment rooms and service areas.

PRODUCT DATA SHEET 4 - Install piping indicated to be exposed and piping in equipment rooms and service areas at right angles or parallel to building walls. Diagonal runs are prohibited unless specifically indicated otherwise.

PRODUCT DATA SHEET 5 - Install piping above accessible ceilings to allow sufficient space for ceiling panel removal.

PRODUCT DATA SHEET 6 - Install piping to permit valve servicing.

PRODUCT DATA SHEET 7 - Install piping at indicated slopes.

PRODUCT DATA SHEET 8 - Install piping free of sags and bends.

PRODUCT DATA SHEET 9 - Install fittings for changes in direction and branch connections.

PRODUCT DATA SHEET 10 - Install piping to allow application of insulation.

PRODUCT DATA SHEET 11 - Select system components with pressure rating equal to or greater than system operating pressure.

PRODUCT DATA SHEET 12 - Install escutcheons for penetrations of walls, ceilings, and floors according to the following:

3.1 New Piping:

A. Piping with Fitting or Sleeve Protruding from Wall: One-piece, deep-pattern type.

B. Chrome-Plated Piping: One-piece, cast-brass type with polished chrome-plated finish.

C. Insulated Piping: One-piece, stamped-steel type with spring clips.

D. Bare Piping at Wall and Floor Penetrations in Finished Spaces: One-piece, cast-brass type with polished chrome-plated finish.

E. Bare Piping at Wall and Floor Penetrations in Finished Spaces: One-piece, stamped-steel type.

F. Bare Piping at Ceiling Penetrations in Finished Spaces: One-piece, cast-brass type with polished chrome-plated finish.

G. Bare Piping at Ceiling Penetrations in Finished Spaces: One-piece, stamped-steel type and set screw.

H. Bare Piping in Unfinished Service Spaces: One-piece, cast-brass type with rough-brass finish.

I. Bare Piping in Unfinished Service Spaces: One-piece, stamped-steel type with concealed or exposed-rivet hinge and set screw.

J. Bare Piping in Equipment Rooms: One-piece, cast-brass type.

K. Bare Piping in Equipment Rooms: One-piece, stamped-steel type with set screw or spring clips.

L. Bare Piping at Floor Penetrations in Equipment Rooms: One-piece, floor-plate type.

3.2 Sleeves are not required for core-drilled holes.

3.3 Permanent sleeves are not required for holes formed by removable PE sleeves.

3.4 Install sleeves for pipes passing through concrete and masonry walls and concrete floor and roof slabs.

3.5 Install sleeves for pipes passing through concrete and masonry walls, gypsum-board partitions, and concrete floor and roof slabs.

3.6 Cut sleeves to length for mounting flush with both surfaces.

A. Exception: Extend sleeves installed in floors of mechanical equipment areas or other wet areas 2 inches (50 mm) above finished floor level. Extend cast-iron sleeve fittings below floor slab as required to secure clamping ring if ring is specified.

3.7 Install sleeves in new walls and slabs as new walls and slabs are constructed.

3.8 Install sleeves that are large enough to provide 1/4-inch (6.4-mm) annular clear space between sleeve and pipe or pipe insulation. Use the following sleeve materials:

A. Steel Pipe Sleeves: For pipes smaller than NPS 6 (DN 150).

B. Steel Sheet Sleeves: For pipes NPS 6 (DN 150) and larger, penetrating gypsum-board partitions.

C. Stack Sleeve Fittings: For pipes penetrating floors with membrane waterproofing. Secure flashing between clamping flanges. Install section of cast-iron soil pipe to extend sleeve to 2 inches (50 mm) above finished floor level. Refer to Division 7 Section "Sheet Metal Flashing and Trim" for flashing.

1. Seal space outside of sleeve fittings with grout.

3.9 Except for underground wall penetrations, seal annular space between sleeve and pipe or pipe insulation, using joint sealants appropriate for size, depth, and location of joint. Refer to Division 7 Section "Joint Sealants" for materials and installation.

PRODUCT DATA SHEET 13 - Aboveground, Exterior-Wall Pipe Penetrations: Seal penetrations using sleeves and mechanical sleeve seals. Select sleeve size to allow for 1-inch (25-mm) annular clear space between pipe and sleeve for installing mechanical sleeve seals.

3.1 Install steel pipe for sleeves smaller than 6 inches (150 mm) in diameter.

3.2 Install cast-iron "wall pipes" for sleeves 6 inches (150 mm) and larger in diameter.

3.3 Mechanical Sleeve Seal Installation: Select type and number of sealing elements required for pipe material and size. Position pipe in center of sleeve. Assemble mechanical sleeve seals and install in annular space between pipe and sleeve. Tighten bolts against pressure plates that cause sealing elements to expand and make watertight seal.

PRODUCT DATA SHEET 14 - Underground, Exterior-Wall Pipe Penetrations: Install cast-iron "wall pipes" for sleeves. Seal pipe penetrations using mechanical sleeve seals. Select sleeve size to allow for 1-inch (25-mm) annular clear space between pipe and sleeve for installing mechanical sleeve seals.

3.1 Mechanical Sleeve Seal Installation: Select type and number of sealing elements required for pipe material and size. Position pipe in center of sleeve. Assemble mechanical sleeve seals and install in annular space between pipe and sleeve. Tighten bolts against pressure plates that cause sealing elements to expand and make watertight seal.

PRODUCT DATA SHEET 15 - Fire-Barrier Penetrations: Maintain indicated fire rating of walls, partitions, ceilings, and floors at pipe penetrations. Seal pipe penetrations with firestop materials. Refer to Division 7 Section "Through-Penetration Firestop Systems" for materials.

PRODUCT DATA SHEET 16 - Verify final equipment locations for roughing-in.

PRODUCT DATA SHEET 17 - Refer to equipment specifications in other Sections of these Specifications for roughing-in requirements.

SCHEDULE 2 - PIPING JOINT CONSTRUCTION

PRODUCT DATA SHEET 1 - Join pipe and fittings according to the following requirements and Division 22 Sections specifying piping systems.

PRODUCT DATA SHEET 2 - Ream ends of pipes and tubes and remove burrs. Bevel plain ends of steel pipe.

PRODUCT DATA SHEET 3 - Remove scale, slag, dirt, and debris from inside and outside of pipe and fittings before assembly.

PRODUCT DATA SHEET 4 - Soldered Joints: Apply ASTM B 813, water-flushable flux, unless otherwise indicated, to tube end. Construct joints according to ASTM B 828 or CDA's "Copper Tube Handbook," using lead-free solder alloy complying with ASTM B 32.

PRODUCT DATA SHEET 5 - Brazed Joints: Construct joints according to AWS's "Brazing Handbook," "Pipe and Tube" Chapter, using copper-phosphorus brazing filler metal complying with AWS A5.8.

PRODUCT DATA SHEET 6 - Threaded Joints: Thread pipe with tapered pipe threads according to ASME B1.20.1. Cut threads full and clean using sharp dies. Ream threaded pipe ends to remove burrs and restore full ID. Join pipe fittings and valves as follows:

3.1 Apply appropriate tape or thread compound to external pipe threads unless dry seal threading is specified.

3.2 Damaged Threads: Do not use pipe or pipe fittings with threads that are corroded or damaged. Do not use pipe sections that have cracked or open welds.

PRODUCT DATA SHEET 7 - Welded Joints: Construct joints according to AWS D10.12, using qualified processes and welding operators according to Part 1 "Quality Assurance" Article.

PRODUCT DATA SHEET 8 - Flanged Joints: Select appropriate gasket material, size, type, and thickness for service application. Install gasket concentrically positioned. Use suitable lubricants on bolt threads.

PRODUCT DATA SHEET 9 - Plastic Piping Solvent-Cement Joints: Clean and dry joining surfaces. Join pipe and fittings according to the following:

3.1 Comply with ASTM F 402 for safe-handling practice of cleaners, primers, and solvent cements.

3.2 ABS Piping: Join according to ASTM D 2235 and ASTM D 2661 Appendixes.

3.3 CPVC Piping: Join according to ASTM D 2846/D 2846M Appendix.

3.4 PVC Pressure Piping: Join schedule number ASTM D 1785, PVC pipe and PVC socket fittings according to ASTM D 2672. Join other-than-schedule-number PVC pipe and socket fittings according to ASTM D 2855.

3.5 PVC Non-pressure Piping: Join according to ASTM D 2855.

3.6 PVC to ABS Non-pressure Transition Fittings: Join according to ASTM D 3138 Appendix.

PRODUCT DATA SHEET 10 - Plastic Pressure Piping Gasketed Joints: Join according to ASTM D 3139.

PRODUCT DATA SHEET 11 - Plastic Non-pressure Piping Gasketed Joints: Join according to ASTM D 3212.

PRODUCT DATA SHEET 12 - PE Piping Heat-Fusion Joints: Clean and dry joining surfaces by wiping with clean cloth or paper towels. Join according to ASTM D 2657.

3.1 Plain-End Pipe and Fittings: Use butt fusion.

3.2 Plain-End Pipe and Socket Fittings: Use socket fusion.

PRODUCT DATA SHEET 13 - Fiberglass Bonded Joints: Prepare pipe ends and fittings, apply adhesive, and join according to pipe manufacturer's written instructions.

SCHEDULE 3 - PIPING CONNECTIONS

PRODUCT DATA SHEET 1 - Make connections according to the following, unless otherwise indicated:

3.1 Install unions, in piping NPS 2 (DN 50) and smaller, adjacent to each valve and at final connection to each piece of equipment.

3.2 Install flanges, in piping NPS 2-1/2 (DN 65) and larger, adjacent to flanged valves and at final connection to each piece of equipment.

3.3 Dry Piping Systems: Install dielectric unions and flanges to connect piping materials of dissimilar metals.

3.4 Wet Piping Systems: Install dielectric coupling and nipple fittings to connect piping materials of dissimilar metals.

SCHEDULE 4 - EQUIPMENT INSTALLATION - COMMON REQUIREMENTS

PRODUCT DATA SHEET 1 - Install equipment to allow maximum possible headroom unless specific mounting heights are not indicated.

PRODUCT DATA SHEET 2 - Install equipment level and plumb, parallel and perpendicular to other building systems and components in exposed interior spaces, unless otherwise indicated.

PRODUCT DATA SHEET 3 - Install mechanical equipment to facilitate service, maintenance, and repair or replacement of components. Connect equipment for ease of disconnecting, with minimum interference to other installations. Extend grease fittings to accessible locations.

PRODUCT DATA SHEET 4 - Install equipment to allow right of way for piping installed at required slope.

SCHEDULE 5 - PAINTING

PRODUCT DATA SHEET 1 - Painting of mechanical systems, equipment, and components is specified in Division 9 Section "Painting (Consumer Line Products) or Painting (Professional Line Products)."

PRODUCT DATA SHEET 2 - Damage and Touchup: Repair marred and damaged factory-painted finishes with materials and procedures to match original factory finish.

SCHEDULE 6 - CONCRETE BASES

PRODUCT DATA SHEET 1 - Concrete Bases: Anchor equipment to concrete base according to equipment manufacturer's written instructions and according to seismic codes at Project.

3.1 Construct concrete bases of dimensions indicated, but not less than 4 inches (100 mm) larger in both directions than supported unit.

3.2 Install dowel rods to connect concrete base to concrete floor. Unless otherwise indicated, install dowel rods on 18-inch (450-mm) centers around the full perimeter of the base.

3.3 Install epoxy-coated anchor bolts for supported equipment that extend through concrete base, and anchor into structural concrete floor.

3.4 Place and secure anchorage devices. Use supported equipment manufacturer's setting drawings, templates, diagrams, instructions, and directions furnished with items to be embedded.

3.5 Install anchor bolts to elevations required for proper attachment to supported equipment.

3.6 Install anchor bolts according to anchor-bolt manufacturer's written instructions.

3.7 Use 3000-psi (20.7-MPa), 28-day compressive-strength concrete and reinforcement as specified in Division 3 Section "Cast-in-Place Concrete or Cast-in-Place Concrete (Limited Applications)."

SCHEDULE 7 - ERECTION OF METAL SUPPORTS AND ANCHORAGES

PRODUCT DATA SHEET 1 - Refer to Division 5 Section "Metal Fabrications" for structural steel.

PRODUCT DATA SHEET 2 - Cut, fit, and place miscellaneous metal supports accurately in location, alignment, and elevation to support and anchor mechanical materials and equipment.

PRODUCT DATA SHEET 3 - Field Welding: Comply with AWS D1.1.

SCHEDULE 8 - ERECTION OF WOOD SUPPORTS AND ANCHORAGES

PRODUCT DATA SHEET 1 - Cut, fit, and place wood grounds, nailers, blocking, and anchorages to support, and anchor mechanical materials and equipment.

PRODUCT DATA SHEET 2 - Select fastener sizes that will not penetrate members if opposite side will be exposed to view or will receive finish materials. Tighten connections between members. Install fasteners without splitting wood members.

PRODUCT DATA SHEET 3 - Attach to substrates as required to support applied loads.

SCHEDULE 9 - GROUTING

PRODUCT DATA SHEET 1 - Mix and install grout for mechanical equipment base bearing surfaces, pump and other equipment base plates, and anchors.

PRODUCT DATA SHEET 2 - Clean surfaces that will come into contact with grout.

PRODUCT DATA SHEET 3 - Provide forms as required for placement of grout.

PRODUCT DATA SHEET 4 - Avoid air entrapment during placement of grout.

PRODUCT DATA SHEET 5 - Place grout, completely filling equipment bases.

PRODUCT DATA SHEET 6 - Place grout on concrete bases and provide smooth bearing surface for equipment.

PRODUCT DATA SHEET 7 - Place grout around anchors.

PRODUCT DATA SHEET 8 - Cure placed grout.

END OF SECTION 23 05 03

SECTION 23 05 49 - HVAC VIBRATION AND SEISMIC CONTROLS

PART 1 - GENERAL

SCHEDULE 1 - RELATED DOCUMENTS:

PRODUCT DATA SHEET 1 - Drawings and general provisions of the Contract, including General and Supplementary Conditions and Division 1 Specification Sections, apply to this Section.

SCHEDULE 2 - SUMMARY:

PRODUCT DATA SHEET 1 - This Section includes the following:

1.1 Elastomeric isolation pads and mounts.

1.2 Restrained elastomeric isolation mounts.

1.3 Restrained vibration isolation roof-curb rails.

SCHEDULE 3 - DEFINITIONS:

PRODUCT DATA SHEET 1 - Effective peak velocity related acceleration coefficient.

SCHEDULE 4 - PERFORMANCE REQUIREMENTS:

PRODUCT DATA SHEET 1 - California Building Codes.

PRODUCT DATA SHEET 2 - Component Seismic Coefficient: 0.40.

PRODUCT DATA SHEET 3 - Performance Criteria Factor: Per CBC Chapter 16A, Division I and IV.

PRODUCT DATA SHEET 4 - Attachment Amplification Factor: Per CBC Chapter 16A, Division I and IV.

SCHEDULE 5 - SUBMITTALS:

PRODUCT DATA SHEET 1 - Product Data: Include load deflection curves for each vibration isolation device.

PRODUCT DATA SHEET 2 - Shop Drawings: Signed and sealed by a qualified professional engineer. Include the following:

1.1 Design Calculations: Calculate requirements for selecting vibration isolators and seismic restraints and for designing vibration isolation bases.

1.2 Vibration Isolation Base Details: Detail fabrication, including anchorages and attachments to structure and to supported equipment. Include auxiliary motor slides and rails, base weights, equipment static loads, power transmission, component misalignment, and cantilever loads.

1.3 Seismic-Restraint Details: Detail fabrication and attachment of seismic restraints. Show anchorage details and indicate quantity, diameter, and depth of penetration of anchors.

PRODUCT DATA SHEET 3 - Welding certificates.

PRODUCT DATA SHEET 4 - Air-Mounting System Performance Certification: Include natural frequency, load, and damping tests performed by an independent laboratory or acoustician.

PRODUCT DATA SHEET 5 - Manufacturer Seismic Qualification Certification: Submit certification that all specified equipment will withstand seismic forces identified in "Performance Requirements" Article above. Include the following:

1.1 Basis for Certification: Indicate whether withstand certification is based on actual test of assembled components or on calculations.

A. The term "withstand" means "the unit will remain in place without separation of any parts from the device when subjected to the seismic forces specified."

B. The term "withstand" means "the unit will remain in place without separation of any parts from the device when subjected to the seismic forces specified and the unit will be fully operational after the seismic event."

1.2 Dimensioned Outline Drawings of Equipment Unit: Identify center of gravity and locate and describe mounting and anchorage provisions.

1.3 Detailed description of equipment anchorage devices on which the certification is based and their installation requirements.

SCHEDULE 6 - QUALITY ASSURANCE:

PRODUCT DATA SHEET 1 - Welding: Qualify procedures and personnel according to AWS D1.1, "Structural Welding Code--Steel."

SCHEDULE 7 - COORDINATION:

PRODUCT DATA SHEET 1 - Coordinate size and location of concrete bases. Cast anchor-bolt inserts into base. Concrete, reinforcement, and formwork requirements are specified in Division 3.

PRODUCT DATA SHEET 2 - Coordinate installation of roof curbs, equipment supports, and roof penetrations. These items are specified in Division 7 Section "Roof Accessories."

SCHEDULE 8 - EXTRA MATERIALS:

PRODUCT DATA SHEET 1 - Furnish extra materials described below that match products installed and that are packaged with protective covering for storage and identified with labels describing contents.

1.1 Seismic Snubber Units: Furnish replacement neoprene inserts for all snubbers.

PART 2 - PRODUCTS

SCHEDULE 1 - MANUFACTURERS:

PRODUCT DATA SHEET 1 - In other Part 2 articles where subparagraph titles below introduce lists, the following requirements apply for product selection:

2.1 Manufacturers: Subject to compliance with requirements, provide products by the manufacturers specified.

SCHEDULE 2 - VIBRATION ISOLATORS:

PRODUCT DATA SHEET 1 - Available Manufacturers:

PRODUCT DATA SHEET 2 - Manufacturers:

2.1 Amber/Booth Company, Inc.

2.2 Mason Industries, Inc.

2.3 M.W. Sausse & Co.

PRODUCT DATA SHEET 3 - Elastomeric Isolator Pads: Oil- and water-resistant elastomer or natural rubber, arranged in single or multiple layers, molded with a nonslip pattern and galvanized steel baseplates of sufficient stiffness for uniform loading over pad area, and factory cut to sizes that match requirements of supported equipment.

2.1 Material: Standard neoprene.

2.2 Durometer Rating: 50.

2.3 Number of Layers: 1.

PRODUCT DATA SHEET 4 - Restrained Elastomeric Mounts: All-directional elastomeric mountings with seismic restraint.

2.1 Materials: Cast-ductile-iron housing containing two separate and opposing, molded, bridge-bearing neoprene elements that prevent central threaded sleeve and attachment bolt from contacting the casting during normal operation.

2.2 Neoprene: Shock-absorbing materials compounded according to, the standard for bridge-bearing neoprene as defined by AASHTO.

SCHEDULE 3 - RESTRAINED VIBRATION ISOLATION ROOF-CURB RAILS:

PRODUCT DATA SHEET 1 - Manufacturers:

2.1 Provent

2.2 Mason Industries, Inc.

2.3 ThyCurb

PRODUCT DATA SHEET 2 - Description: Factory-assembled, fully enclosed, insulated, air- and watertight curb rail designed to resiliently support equipment and to withstand 125-mph (56-m/s) wind impinging laterally against side of equipment.

PRODUCT DATA SHEET 3 - Lower Support Assembly: Sheet-metal "Z" section containing adjustable and removable steel springs that support upper floating frame. Upper frame shall provide continuous support for equipment and shall be captive to resiliently resist wind and seismic forces. Lower support assembly shall have a means for attaching to building structure and a wood nailer for attaching roof materials, and shall be insulated with a minimum of 2 inches (50 mm) of rigid, glass-fiber insulation on inside of assembly.

PRODUCT DATA SHEET 4 - Spring Isolators: Adjustable, restrained spring isolators shall be mounted on 1/4-inch- (6-mm-) thick, elastomeric vibration isolation pads and shall have access ports, for level adjustment, with removable waterproof covers at all isolator locations. Isolators shall be located so they are accessible for adjustment at any time during the life of the installation without interfering with the integrity of the roof.

2.1 Restrained Spring Isolators: Freestanding, steel, open-spring isolators with seismic restraint.

A. Housing: Steel with resilient vertical-limit stops and adjustable equipment mounting and leveling bolt.

B. Outside Spring Diameter: Not less than 80 percent of the compressed height of the spring at rated load.

C. Minimum Additional Travel: 50 percent of the required deflection at rated load.

D. Lateral Stiffness: More than 80 percent of the rated vertical stiffness.

E. Overload Capacity: Support 200 percent of rated load, fully compressed, without deformation or failure.

2.2 Elastomeric Isolator Pads: Oil- and water-resistant elastomer or natural rubber, arranged in single or multiple layers, molded with a nonslip pattern and galvanized steel baseplates of sufficient stiffness for uniform loading over pad area, and factory cut to sizes that match requirements of supported equipment.

A. Material: Standard neoprene.

B. Durometer Rating: 50.

C. Number of Layers: 1.

PRODUCT DATA SHEET 5 - Snubber Bushings: All-directional, elastomeric snubber bushings at least 1/4 inch (6 mm) thick.

PRODUCT DATA SHEET 6 - Water Seal: Galvanized sheet metal with EPDM seals at corners, attached to upper support frame, extending down past wood nailer of lower support assembly, and counterflashed over roof materials.

SCHEDULE 4 - FACTORY FINISHES:

PRODUCT DATA SHEET 1 - Manufacturer's standard prime-coat finish ready for field painting.

PRODUCT DATA SHEET 2 - Finish: Manufacturer's standard paint applied to factory-assembled and -tested equipment before shipping.

2.1 Powder coating on springs and housings.

2.2 All hardware shall be electrogalvanized. Hot-dip galvanize metal components for exterior use.

2.3 Baked enamel for metal components on isolators for interior use.

2.4 Color-code or otherwise mark vibration isolation and seismic-control devices to indicate capacity range.

PART 3 - EXECUTION

SCHEDULE 1 - EXAMINATION:

PRODUCT DATA SHEET 1 - Examine areas and equipment to receive vibration isolation and seismic-control devices for compliance with requirements, installation tolerances, and other conditions affecting performance.

PRODUCT DATA SHEET 2 - Examine roughing-in of reinforcement and cast-in-place anchors to verify actual locations before installation.

PRODUCT DATA SHEET 3 - Proceed with installation only after unsatisfactory conditions have been corrected.

SCHEDULE 2 - INSTALLATION:

PRODUCT DATA SHEET 1 - Install roof curbs, equipment supports, and roof penetrations as specified in Division 7 Section "Roof Accessories."

PRODUCT DATA SHEET 2 - Install steel angles or channel, sized to prevent buckling, clamped with ductile-iron clamps to hanger rods for trapeze and individual pipe hangers. At trapeze anchor locations, shackle piping to trapeze. Requirements apply equally to hanging equipment. Do not weld angles to rods.

PRODUCT DATA SHEET 3 - Install resilient bolt isolation washers on equipment anchor bolts.

SCHEDULE 3 - FIELD QUALITY CONTROL:

PRODUCT DATA SHEET 1 - Testing: Owner will engage a qualified testing agency to perform the following field quality-control testing:

PRODUCT DATA SHEET 2 - Testing: Engage a qualified testing agency to perform the following field quality-control testing:

PRODUCT DATA SHEET 3 - Testing: Perform the following field quality-control testing:

3.1 Isolator seismic-restraint clearance.

3.2 Isolator deflection.

SCHEDULE 4 - ADJUSTING:

PRODUCT DATA SHEET 1 - Adjust limit stops on restrained spring isolators to mount equipment at normal operating height. After equipment installation is complete, adjust limit stops so they are out of contact during normal operation.

PRODUCT DATA SHEET 2 - Adjust active height of spring isolators.

PRODUCT DATA SHEET 3 - Adjust seismic restraints to permit free movement of equipment within normal mode of operation.

PRODUCT DATA SHEET 4 - Torque anchor bolts according to equipment manufacturer's written recommendations to resist seismic forces.

SCHEDULE 5 - CLEANING:

PRODUCT DATA SHEET 1 - After completing equipment installation, inspect vibration isolation and seismic-control devices. Remove paint splatters and other spots, dirt, and debris.

END OF SECTION 23 05 49

SECTION 23 05 53 – IDENTIFICATION FOR HVAC PIPING AND EQUIPMMENT

PART 1 - GENERAL

SCHEDULE 1 - RELATED DOCUMENTS:

PRODUCT DATA SHEET 1 - Drawings and general provisions of the Contract, including General and Supplementary Conditions and Division 1 Specification Sections, apply to this Section.

SCHEDULE 2 - SUMMARY:

PRODUCT DATA SHEET 1 - This Section includes the following mechanical identification materials and their installation:

1.1 Equipment nameplates.

1.2 Equipment markers.

1.3 Equipment signs.

1.4 Access panel and door markers.

1.5 Pipe markers.

1.6 Stencils.

1.7 Valve tags.

1.8 Valve schedules.

1.9 Warning tags.

SCHEDULE 3 - SUBMITTALS:

PRODUCT DATA SHEET 1 - Product Data: For each type of product indicated.

PRODUCT DATA SHEET 2 - Samples: For color, letter style, and graphic representation required for each identification material and device.

PRODUCT DATA SHEET 3 - Valve numbering scheme.

PRODUCT DATA SHEET 4 - Valve Schedules: For each piping system. Furnish extra copies (in addition to mounted copies) to include in maintenance manuals.

SCHEDULE 4 - QUALITY ASSURANCE:

PRODUCT DATA SHEET 1 - ASME Compliance: Comply with ASME A13.1, "Scheme for the Identification of Piping Systems," for letter size, length of color field, colors, and viewing angles of identification devices for piping.

SCHEDULE 5 - COORDINATION:

PRODUCT DATA SHEET 1 - Coordinate installation of identifying devices with completion of covering and painting of surfaces where devices are to be applied.

PRODUCT DATA SHEET 2 - Coordinate installation of identifying devices with location of access panels and doors.

PRODUCT DATA SHEET 3 - Install identifying devices before installing ceilings.

PART 2 - PRODUCTS

SCHEDULE 1 - EQUIPMENT IDENTIFICATION DEVICES:

PRODUCT DATA SHEET 1 - Equipment Nameplates: Laminated plastic, with data engraved or stamped, for permanent attachment on equipment.

2.1 Data:

A. Manufacturer, product name, model number, and serial number.

B. Capacity, operating and power characteristics, and essential data.

C. Labels of tested compliances.

2.2 Location: Accessible and visible.

2.3 Fasteners: As required to mount on equipment.

PRODUCT DATA SHEET 2 - Equipment Markers: Engraved, color-coded laminated plastic. Include contact-type, permanent adhesive.

2.1 Terminology: Match schedules as closely as possible.

2.2 Data:

A. Name and plan number.

B. Equipment service.

C. Design capacity.

D. Other design parameters such as pressure drop, entering and leaving conditions, and speed.

2.3 Size: 2-1/2 by 4 inches (64 by 100 mm) for control devices, dampers, and valves; 4-1/2 by 6 inches (115 by 150 mm) for equipment.

PRODUCT DATA SHEET 3 - Equipment Signs: ASTM D 709, Type I, cellulose, paper-base, phenolic-resin-laminate engraving stock; Grade ES-2, black surface, black phenolic core, with white

melamine subcore, unless otherwise indicated. Fabricate in sizes required for message. Provide holes for mechanical fastening.

2.1 Data: Instructions for operation of equipment and for safety procedures.

2.2 Engraving: Manufacturer's standard letter style, of sizes and with terms to match equipment identification.

2.3 Thickness: 1/16 inch (1.6 mm) for units up to 20 sq. in. (130 sq. cm) or 8 inches (200 mm) in length, and 1/8 inch (3.2 mm) for larger units.

2.4 Fasteners: Self-tapping, stainless-steel screws or contact-type, permanent adhesive.

PRODUCT DATA SHEET 4 - Access Panel and Door Markers: 1/16-inch- (1.6-mm-) thick, engraved laminated plastic, with abbreviated terms and numbers corresponding to identification. Provide 1/8-inch (3.2-mm) center hole for attachment.

2.1 Fasteners: Self-tapping, stainless-steel screws or contact-type, permanent adhesive.

SCHEDULE 2 - PIPING IDENTIFICATION DEVICES:

PRODUCT DATA SHEET 1 - Manufactured Pipe Markers, General: Preprinted, color-coded, with lettering indicating service, and showing direction of flow.

2.1 Colors: Comply with ASME A13.1, unless otherwise indicated.

2.2 Lettering: Use piping system terms indicated and abbreviate only as necessary for each application length.

2.3 Pipes with OD, Including Insulation, Less Than 6 Inches (150 mm): Full-band pipe markers extending 360 degrees around pipe at each location.

2.4 Arrows: Integral with piping system service lettering to accommodate both directions; or as separate unit on each pipe marker to indicate direction of flow.

PRODUCT DATA SHEET 2 - Pre-tensioned Pipe Markers: Pre-coiled semi-rigid plastic formed to cover full circumference of pipe and to attach to pipe without adhesive.

PRODUCT DATA SHEET 3 - Shaped Pipe Markers: Preformed semi-rigid plastic formed to partially cover circumference of pipe and to attach to pipe with mechanical fasteners that do not penetrate insulation vapor barrier.

PRODUCT DATA SHEET 4 - Self-Adhesive Pipe Markers: Plastic with pressure-sensitive, permanent-type, self-adhesive back.

PRODUCT DATA SHEET 5 - Plastic Tape: Continuously printed, vinyl tape at least 3 mils (0.08 mm) thick with pressure-sensitive, permanent-type, self-adhesive back.

2.1 Width for Markers on Pipes with OD, Including Insulation, Less Than 6 Inches (150 mm): 3/4 inch (19 mm) minimum.

SCHEDULE 3 - DUCT IDENTIFICATION DEVICES:

PRODUCT DATA SHEET 1 -Duct Markers: Engraved, color-coded laminated plastic. Include direction and quantity of airflow and duct service (such as supply, return, and exhaust). Include contact-type, permanent adhesive.

SCHEDULE 4 - STENCILS:

PRODUCT DATA SHEET 1 -Stencils: Prepared with letter sizes according to ASME A13.1 for piping; minimum letter height of 1-1/4 inches (32 mm) for ducts; and minimum letter height of 3/4 inch (19 mm) for access panel and door markers, equipment markers, equipment signs, and similar operational instructions.

2.1 Stencil Material: Metal or fiberboard.

2.2 Stencil Paint: Exterior, gloss, alkyd enamel black, unless otherwise indicated. Paint may be in pressurized spray-can form.

2.3 Identification Paint: Exterior, alkyd enamel in colors according to ASME A13.1, unless otherwise indicated.

SCHEDULE 5 - VALVE TAGS:

PRODUCT DATA SHEET 1 -Valve Tags: Stamped or engraved with 1/4-inch (6.4-mm) letters for piping system abbreviation and 1/2-inch (13-mm) numbers, with numbering scheme. Provide 5/32-inch (4-mm) hole for fastener.

2.1 Material: 0.032-inch- (0.8-mm-) thick brass.

2.2 Material: 0.0375-inch- (1-mm-) thick stainless steel.

2.3 Material: 3/32-inch- (2.4-mm-) thick laminated plastic with 2 black surfaces and white inner layer.

2.4 Valve-Tag Fasteners: Brass beaded chain.

SCHEDULE 6 - VALVE SCHEDULES:

PRODUCT DATA SHEET 1 -Valve Schedules: For each piping system, on standard-size bond paper. Tabulate valve number, piping system, system abbreviation (as shown on valve tag), location of valve (room or space), normal-operating position (open, closed, or modulating), and variations for identification. Mark valves for emergency shutoff and similar special uses.

2.1 Valve-Schedule Frames: Glazed display frame for removable mounting on masonry walls for each page of valve schedule. Include mounting screws.

2.2 Frame: Extruded aluminum.

2.3 Glazing: ASTM C 1036, Type I, Class 1, Glazing Quality B, 2.5-mm, single-thickness glass.

SCHEDULE 7 - WARNING TAGS:

PRODUCT DATA SHEET 1 -Warning Tags: Preprinted or partially preprinted, accident-prevention tags; of plasticized card stock with matte finish suitable for writing.

2.1 Size: Approximately 4 by 7 inches (100 by 178 mm).

2.2 Fasteners: Brass grommet and wire.

2.3 Nomenclature: Large-size primary caption such as DANGER, CAUTION, or DO NOT OPERATE.

2.4 Color: Yellow background with black lettering.

PART 3 - EXECUTION

SCHEDULE 1 - APPLICATIONS, GENERAL:

PRODUCT DATA SHEET 1 -Products specified are for applications referenced in other Division 15 Sections. If more than single-type material, device, or label is specified for listed applications, selection is Installer's option.

SCHEDULE 2 - EQUIPMENT IDENTIFICATION:

PRODUCT DATA SHEET 1 -Install and permanently fasten equipment nameplates on each major item of mechanical equipment that does not have nameplate or has nameplate that is damaged or located where not easily visible. Locate nameplates where accessible and visible. Include nameplates for the following general categories of equipment:

3.1 Heaters.

3.2 Heat pumps.

3.3 Fans and blowers.

3.4 Packaged HVAC units.

3.5 Furnaces.

PRODUCT DATA SHEET 2 - Install equipment markers with permanent adhesive on or near each major item of mechanical equipment. Data required for markers may be included on signs, and markers may be omitted if both are indicated.

3.1 Letter Size: Minimum 1/4 inch (6.4 mm) for name of units if viewing distance is less than 24 inches (600 mm), 1/2 inch (13 mm) for viewing distances up to 72 inches (1830 mm), and proportionately larger lettering for greater viewing distances. Include secondary lettering two-thirds to three-fourths the size of principal lettering.

3.2 Data: Distinguish among multiple units, indicate operational requirements, indicate safety and emergency precautions, warn of hazards and improper operations, and identify units.

3.3 Locate markers where accessible and visible. Include markers for the following general categories of equipment:

A. Main control and operating valves, including safety devices and hazardous units.

B. Fire department hose valves and hose stations.

C. Heat pumps.

D. Heaters.

E. Pumps and similar motor-driven units.

F. Fans and blowers.

G. Packaged HVAC zone-type units.

H. Furnaces.

PRODUCT DATA SHEET 3 - Stenciled Equipment Marker Option: Stenciled markers may be provided instead of laminated-plastic equipment markers, at Installer's option, if lettering larger than 1 inch (25 mm) high is needed for proper identification because of distance from normal location of required identification.

PRODUCT DATA SHEET 4 - Install equipment signs with screws or permanent adhesive on or near each major item of mechanical equipment. Locate signs where accessible and visible.

3.1 Letter Size: Minimum 1/2 inch (13 mm) for viewing distances up to 72 inches (1830 mm), and proportionately larger lettering for greater viewing distances. Include secondary lettering two-thirds to three-fourths the size of principal lettering.

3.2 Data: Distinguish among multiple units, indicate operational requirements, indicate safety and emergency precautions, warn of hazards and improper operations, and identify units.

3.3 Include signs for the following general categories of equipment:

A. Main control and operating valves, including safety devices and hazardous units such as gas outlets.

B. Heaters.

C. Heat pumps.

D. Fans and blowers.

E. Packaged HVAC units.

F. Furnaces.

PRODUCT DATA SHEET 5 - Stenciled Equipment Sign Option: Stenciled signs may be provided instead of laminated-plastic equipment signs, at Installer's option, if lettering larger than 1 inch (25 mm) high is needed for proper identification because of distance from normal location of required identification.

PRODUCT DATA SHEET 6 - Install access panel markers with screws on equipment access panels.

SCHEDULE 3 - PIPING IDENTIFICATION:

PRODUCT DATA SHEET 1 -Install manufactured pipe markers indicating service on each piping system. Install with flow indication arrows showing direction of flow.

3.1 Pipes with OD, Including Insulation, Less Than 6 Inches (150 mm): Pretensioned pipe markers. Use size to ensure a tight fit.

3.2 Pipes with OD, Including Insulation, Less Than 6 Inches (150 mm): Self-adhesive pipe markers. Use color-coded, self-adhesive plastic tape, at least 3/4 inch (19 mm) wide, lapped at least 1-1/2 inches (38 mm) at both ends of pipe marker, and covering full circumference of pipe.

PRODUCT DATA SHEET 2 - Stenciled Pipe Marker Option: Stenciled markers may be provided instead of manufactured pipe markers, at Installer's option. Install stenciled pipe markers complying with ASME A13.1 on each piping system.

3.1 Identification Paint: Use for contrasting background.

3.2 Stencil Paint: Use for pipe marking.

PRODUCT DATA SHEET 3 - Locate pipe markers and color bands where piping is exposed in finished spaces; machine rooms; accessible maintenance spaces such as shafts, tunnels, and plenums; and exterior nonconcealed locations as follows:

3.1 Near each valve and control device.

3.2 Near each branch connection, excluding short takeoffs for fixtures and terminal units. Where flow pattern is not obvious, mark each pipe at branch.

3.3 Near penetrations through walls, floors, ceilings, and nonaccessible enclosures.

3.4 At access doors, manholes, and similar access points that permit view of concealed piping.

3.5 Near major equipment items and other points of origination and termination.

3.6 Spaced at maximum intervals of 50 feet (15 m) along each run. Reduce intervals to 25 feet (7.6 m) in areas of congested piping and equipment.

SCHEDULE 4 - VALVE-TAG INSTALLATION:

PRODUCT DATA SHEET 1 -Install tags on valves and control devices in piping systems, except check valves; valves within factory-fabricated equipment units; plumbing fixture supply stops; shutoff valves; faucets; convenience and lawn-watering hose connections. List tagged valves in a valve schedule.

PRODUCT DATA SHEET 2 - Valve-Tag Application Schedule: Tag valves according to size, shape, and color scheme and with captions similar to those indicated in the following:

3.1 Valve-Tag Size and Shape:

A. Cold Water: 1-1/2 inches (38 mm), round.

B. Hot Water: 1-1/2 inches (38 mm), round.

C. Fire Protection: 1-1/2 inches (38 mm), round.

3.2 Valve-Tag Color:

A. Cold Water: Blue.

B. Hot Water: Red.

C. Fire Protection: Black.

3.3 Letter Color:

A. Cold Water: White.

B. Hot Water: White.

C. Fire Protection: White.

SCHEDULE 5 - VALVE-SCHEDULE INSTALLATION:

PRODUCT DATA SHEET 1 - Mount valve schedule on wall in accessible location in each major equipment room.

SCHEDULE 6 - WARNING-TAG INSTALLATION:

PRODUCT DATA SHEET 1 - Write required message on, and attach warning tags to, equipment and other items where required.

SCHEDULE 7 - ADJUSTING:

PRODUCT DATA SHEET 1 - Relocate mechanical identification materials and devices that have become visually blocked by other work.

END OF SECTION 23 05 53

SECTION 23 05 93 - TESTING, ADJUSTING, AND BALANCING

PART 1 - GENERAL

SCHEDULE 1 - RELATED DOCUMENTS:

PRODUCT DATA SHEET 1 -Drawings and general provisions of the Contract, including General and Supplementary Conditions and Division 1 Specification Sections, apply to this Section.

SCHEDULE 2 - SUMMARY:

PRODUCT DATA SHEET 1 -This Section includes TAB to produce design objectives for the following:

1.1 Air Systems:

A. Constant-volume air systems.

1.2 Reporting results of activities and procedures specified in this Section.

SCHEDULE 3 - DEFINITIONS:

PRODUCT DATA SHEET 1 -Adjust: To regulate fluid flow rate and air patterns at the terminal equipment, such as to reduce fan speed or adjust a damper.

PRODUCT DATA SHEET 2 - Balance: To proportion flows within the distribution system, including sub-mains, branches, and terminals, according to indicated quantities.

PRODUCT DATA SHEET 3 - Draft: A current of air, when referring to localized effect caused by one or more factors of high air velocity, low ambient temperature, or direction of airflow, whereby more heat is withdrawn from a person's skin than is normally dissipated.

PRODUCT DATA SHEET 4 - Procedure: An approach to and execution of a sequence of work operations to yield repeatable results.

PRODUCT DATA SHEET 5 - Report Forms: Test data sheets for recording test data in logical order.

PRODUCT DATA SHEET 6 - TAB: Testing, adjusting, and balancing.

PRODUCT DATA SHEET 7 - Terminal: A point where the controlled medium, such as fluid or energy, enters or leaves the distribution system.

PRODUCT DATA SHEET 8 - Test: A procedure to determine quantitative performance of systems or equipment.

PRODUCT DATA SHEET 9 - Testing, Adjusting, and Balancing (TAB) Firm: The entity responsible for performing and reporting TAB procedures.

SCHEDULE 4 - SUBMITTALS:

PRODUCT DATA SHEET 0 - Qualification Data: Within 30 days from Contractor's Notice to Proceed, submit 2 copies of evidence that TAB firm and this Project's TAB team members meet the qualifications specified in "Quality Assurance" Article.

PRODUCT DATA SHEET 1 - Contract Documents Examination Report: Within 45 days from Contractor's Notice to Proceed, submit 4 copies of the Contract Documents review report as specified in Part 3.

PRODUCT DATA SHEET 2 - Strategies and Procedures Plan: Within 90 days from Contractor's Notice to Proceed, submit 6 copies of TAB strategies and step-by-step procedures as specified in Part 3 "Preparation" Article. Include a complete set of report forms intended for use on this Project.

PRODUCT DATA SHEET 3 - Certified TAB Reports: Submit two copies of reports prepared, as specified in this Section, on approved forms certified by TAB firm.

PRODUCT DATA SHEET 4 - Sample Report Forms: Submit two sets of sample TAB report forms.

PRODUCT DATA SHEET 5 - Warranties specified in this Section.

SCHEDULE 5 - QUALITY ASSURANCE:

PRODUCT DATA SHEET 0 - TAB Firm Qualifications: Engage a TAB firm certified by either AABC or NEBB.

PRODUCT DATA SHEET 1 - Certification of TAB Reports: Certify TAB field data reports. This certification includes the following:

1.1 Review field data reports to validate accuracy of data and to prepare certified TAB reports.

1.2 Certify that TAB team complied with approved TAB plan and the procedures specified and referenced in this Specification.

PRODUCT DATA SHEET 2 - TAB Report Forms: Use standard forms from AABC's "National Standards for Testing and Balancing Heating, Ventilating, and Air Conditioning Systems." NEBB's "Procedural Standards for Testing, Adjusting, and Balancing of Environmental Systems."

PRODUCT DATA SHEET 3 - Instrumentation Type, Quantity, and Accuracy: As described in AABC's "National Standards for Testing and Balancing Heating, Ventilating, and Air Conditioning Systems". NEBB's "Procedural Standards for Testing, Adjusting, and Balancing of Environmental Systems," Section II, "Required Instrumentation for NEBB Certification."

PRODUCT DATA SHEET 4 - Instrumentation Calibration: Calibrate instruments at least every six months or more frequently if required by instrument manufacturer.

1.1 Keep an updated record of instrument calibration that indicates date of calibration and the name of party performing instrument calibration.

SCHEDULE 6 - PROJECT CONDITIONS:

PRODUCT DATA SHEET 1 -Full Owner Occupancy: Owner will occupy the site and existing building during entire TAB period. Cooperate with Owner during TAB operations to minimize conflicts with Owner's operations.

PRODUCT DATA SHEET 2 - Partial Owner Occupancy: Owner may occupy completed areas of building before Substantial Completion. Cooperate with Owner during TAB operations to minimize conflicts with Owner's operations.

SCHEDULE 7 - COORDINATION:

PRODUCT DATA SHEET 1 -Coordinate the efforts of factory-authorized service representatives for systems and equipment, HVAC controls installers, and other mechanics to operate HVAC systems and equipment to support and assist TAB activities.

PRODUCT DATA SHEET 2 - Notice: Provide seven days' advance notice for each test. Include scheduled test dates and times.

PRODUCT DATA SHEET 3 - Perform TAB after leakage and pressure tests on air distribution systems have been satisfactorily completed.

SCHEDULE 8 - WARRANTY:

PRODUCT DATA SHEET 0 - National Project Performance Guarantee: Provide a guarantee on AABC's "National Standards for Testing and Balancing Heating, Ventilating, and Air Conditioning Systems" forms stating that AABC will assist in completing requirements of the Contract Documents if TAB firm fails to comply with the Contract Documents. Guarantee includes the following provisions:

PRODUCT DATA SHEET 1 - Special Guarantee: Provide a guarantee on NEBB forms stating that NEBB will assist in completing requirements of the Contract Documents if TAB firm fails to comply with the Contract Documents. Guarantee shall include the following provisions:

1.1 The certified TAB firm has tested and balanced systems according to the Contract Documents.

1.2 Systems are balanced to optimum performance capabilities within design and installation limits.

PART 2 - PRODUCTS (Not Applicable)

PART 3 - EXECUTION

SCHEDULE 1 - EXAMINATION:

PRODUCT DATA SHEET 1 - Examine the Contract Documents to become familiar with Project requirements and to discover conditions in systems' designs that may preclude proper TAB of systems and equipment.

3.1 Contract Documents are defined in the General and Supplementary Conditions of Contract.

3.2 Verify that balancing devices, such as test ports and manual volume dampers, are required by the Contract Documents. Verify that quantities and locations of these balancing devices are accessible and appropriate for effective balancing and for efficient system and equipment operation.

PRODUCT DATA SHEET 2 - Examine approved submittal data of HVAC systems and equipment.

PRODUCT DATA SHEET 3 - Examine Project Record Documents described in Division 1 Section "Project Record Documents."

PRODUCT DATA SHEET 4 - Examine design data, including HVAC system descriptions, statements of design assumptions for environmental conditions and systems' output, and statements of philosophies and assumptions about HVAC system and equipment controls.

PRODUCT DATA SHEET 5 - Examine system and equipment installations to verify that they are complete and that testing, cleaning, adjusting, and commissioning specified in individual Sections have been performed.

PRODUCT DATA SHEET 6 - Examine HVAC system and equipment installations to verify that indicated balancing devices, such as manual volume dampers, are properly installed, and that their locations are accessible and appropriate for effective balancing and for efficient system and equipment operation.

PRODUCT DATA SHEET 7 - Examine systems for functional deficiencies that cannot be corrected by adjusting and balancing.

PRODUCT DATA SHEET 8 - Examine HVAC equipment to ensure that clean filters have been installed, bearings are greased, belts are aligned and tight, and equipment with functioning controls is ready for operation.

PRODUCT DATA SHEET 9 - Examine equipment for installation and for properly operating safety interlocks and controls.

PRODUCT DATA SHEET 10 - Examine automatic temperature system components to verify the following:

3.1 Thermostats are located to avoid adverse effects of sunlight, drafts, and cold walls.

3.2 Sequence of operation for control modes is according to the Contract Documents.

3.3 Interlocked systems are operating.

PRODUCT DATA SHEET 11 - Report deficiencies discovered before and during performance of TAB procedures. Observe and record system reactions to changes in conditions. Record default set points if different from indicated values.

SCHEDULE 2 - PREPARATION:

PRODUCT DATA SHEET 1 - Prepare a TAB plan that includes strategies and step-by-step procedures.

PRODUCT DATA SHEET 2 - Complete system readiness checks and prepare system readiness reports. Verify the following:

3.1 Permanent electrical power wiring is complete.

3.2 Automatic temperature-control systems are operational.

3.3 Equipment and duct access doors are securely closed.

3.4 Balance dampers are open.

3.5 Ceilings are installed in critical areas where air-pattern adjustments are required and access to balancing devices is provided.

3.6 Windows and doors can be closed so indicated conditions for system operations can be met.

SCHEDULE 3 - GENERAL PROCEDURES FOR TESTING AND BALANCING:

PRODUCT DATA SHEET 1 - Perform testing and balancing procedures on each system according to the procedures contained in AABC's "National Standards for Testing and Balancing Heating, Ventilating, and Air Conditioning Systems" NEBB's "Procedural Standards for Testing, Adjusting, and Balancing of Environmental Systems" and this Section.

PRODUCT DATA SHEET 2 - Cut insulation, ducts, pipes, and equipment cabinets for installation of test probes to the minimum extent necessary to allow adequate performance of procedures. After testing and balancing, close probe holes and patch insulation with new materials identical to those removed. Restore vapor barrier and finish according to insulation Specifications for this Project.

PRODUCT DATA SHEET 3 - Mark equipment and balancing device settings with paint or other suitable, permanent identification material, including damper-control positions, valve position indicators, fan-speed-control levers, and similar controls and devices, to show final settings.

PRODUCT DATA SHEET 4 - Take and report testing and balancing measurements in inch-pound (IP) units.

SCHEDULE 4 - GENERAL PROCEDURES FOR BALANCING AIR SYSTEMS:

PRODUCT DATA SHEET 1 - Prepare test reports for both fans and outlets. Obtain manufacturer's outlet factors and recommended testing procedures. Crosscheck the summation of required outlet volumes with required fan volumes.

PRODUCT DATA SHEET 2 - Prepare schematic diagrams of systems' "as-built" duct layouts.

PRODUCT DATA SHEET 3 - Determine the best locations in main and branch ducts for accurate duct airflow measurements.

PRODUCT DATA SHEET 4 - Check airflow patterns from the outside-air intakes and dampers and the return- and exhaust-air dampers, through the supply-fan discharge.

PRODUCT DATA SHEET 5 - Locate start-stop and disconnect switches, electrical interlocks, and motor starters.

PRODUCT DATA SHEET 6 - Verify that motor starters are equipped with properly sized thermal protection.

PRODUCT DATA SHEET 7 - Check dampers for proper position to achieve desired airflow path.

PRODUCT DATA SHEET 8 - Check for airflow blockages.

PRODUCT DATA SHEET 9 - Check condensate drains for proper connections and functioning.

PRODUCT DATA SHEET 10 - Check for proper sealing of air duct system.

SCHEDULE 5 - PROCEDURES FOR CONSTANT-VOLUME AIR SYSTEMS:

PRODUCT DATA SHEET 1 - Adjust fans to deliver total indicated airflows within the maximum allowable fan speed listed by fan manufacturer.

3.1 Measure fan static pressures to determine actual static pressure as follows:

A. Measure outlet static pressure as far downstream from the fan as practicable and upstream from restrictions in ducts such as elbows and transitions.

B. Measure static pressure directly at the fan outlet or through the flexible connection.

C. Measure inlet static pressure of single-inlet fans in the inlet duct as near the fan as possible, upstream from flexible connection and downstream from duct restrictions.

D. Measure inlet static pressure of double-inlet fans through the wall of the plenum that houses the fan.

3.2 Measure static pressure across each component that makes up a rooftop unit, and other air-handling and -treating equipment.

A. Simulate dirty filter operation and record the point at which maintenance personnel must change filters.

3.3 Compare design data with installed conditions to determine variations in design static pressures versus actual static pressures. Compare actual system effect factors with calculated system effect factors to identify where variations occur. Recommend corrective action to align design and actual conditions.

3.4 Obtain approval from Architect for adjustment of fan speed higher or lower than indicated speed. Make required adjustments to pulley sizes, motor sizes, and electrical connections to accommodate fan-speed changes.

3.5 Do not make fan-speed adjustments that result in motor overload. Consult equipment manufacturers about fan-speed safety factors. Modulate dampers and measure fan-motor amperage to ensure that no overload will occur. Measure amperage in full cooling, full heating, economizer, and any other operating modes to determine the maximum required brake horsepower.

PRODUCT DATA SHEET 2 - Adjust volume dampers for main duct, sub-main ducts, and major branch ducts to indicated airflows within specified tolerances.

3.1 Measure static pressure at a point downstream from the balancing damper and adjust volume dampers until the proper static pressure is achieved.

A. Where sufficient space in sub-main and branch ducts is unavailable for Pitot-tube traverse measurements, measure airflow at terminal outlets and inlets and calculate the total airflow for that zone.

3.2 Re-measure each sub-main and branch duct after all have been adjusted. Continue to adjust sub-main and branch ducts to indicated airflows within specified tolerances.

PRODUCT DATA SHEET 3 - Measure terminal outlets and inlets without making adjustments.

3.1 Measure terminal outlets using a direct-reading hood or outlet manufacturer's written instructions and calculating factors.

PRODUCT DATA SHEET 4 - Adjust terminal outlets and inlets for each space to indicated airflows within specified tolerances of indicated values. Make adjustments using volume dampers rather than extractors and the dampers at air terminals.

3.1 Adjust each outlet in same room or space to within specified tolerances of indicated quantities without generating noise levels above the limitations prescribed by the Contract Documents.

3.2 Adjust patterns of adjustable outlets for proper distribution without drafts.

SCHEDULE 6 - PROCEDURES FOR HEAT-TRANSFER COILS:

PRODUCT DATA SHEET 1 - Refrigerant Coils: Measure the following data for each coil:

3.1 Dry-bulb temperature of entering and leaving air.

3.2 Wet-bulb temperature of entering and leaving air.

3.3 Airflow.

3.4 Air pressure drop.

3.5 Refrigerant suction pressure and temperature.

SCHEDULE 7 - PROCEDURES FOR TEMPERATURE MEASUREMENTS:

PRODUCT DATA SHEET 1 - During TAB, report the need for adjustment in temperature regulation within the automatic temperature-control system.

PRODUCT DATA SHEET 2 - Measure indoor wet- and dry-bulb temperatures every other hour for a period of two successive eight-hour days, in each separately controlled zone, to prove correctness of final temperature settings. Measure when the building or zone is occupied.

PRODUCT DATA SHEET 3 - Measure outside-air, wet- and dry-bulb temperatures.

SCHEDULE 8 - TOLERANCES:

PRODUCT DATA SHEET 1 - Set HVAC system airflow rates within the following tolerances:

3.1 Supply, Return, and Exhaust Fans and Equipment with Fans: Plus 5 to plus 10 percent.

3.2 Air Outlets and Inlets: 0 to minus 10 percent.

SCHEDULE 9 - REPORTING:

PRODUCT DATA SHEET 1 - Initial Construction-Phase Report: Based on examination of the Contract Documents as specified in "Examination" Article, prepare a report on the adequacy of design for systems' balancing devices. Recommend changes and additions to systems' balancing devices to facilitate proper performance measuring and balancing. Recommend changes and additions to HVAC systems and general construction to allow access for performance measuring and balancing devices.

PRODUCT DATA SHEET 2 - Status Reports: As Work progresses, prepare reports to describe completed procedures, procedures in progress, and scheduled procedures. Include a list of deficiencies and problems found in systems being tested and balanced. Prepare a separate report for each system and each building floor for systems serving multiple floors.

SCHEDULE 10 - FINAL REPORT:

PRODUCT DATA SHEET 1 - General: Typewritten, or computer printout in letter-quality font, on standard bond paper, in three-ring binder, tabulated and divided into sections by tested and balanced systems.

PRODUCT DATA SHEET 2 - Include a certification sheet in front of binder signed and sealed by the certified testing and balancing engineer.

3.1 Include a list of instruments used for procedures, along with proof of calibration.

PRODUCT DATA SHEET 3 - Final Report Contents: In addition to certified field report data, include the following:

3.1 Fan curves.

3.2 Manufacturers' test data.

3.3 Field test reports prepared by system and equipment installers.

3.4 Other information relative to equipment performance, but do not include Shop Drawings and Product Data.

PRODUCT DATA SHEET 4 - General Report Data: In addition to form titles and entries, include the following data in the final report, as applicable:

3.1 Title page.

3.2 Name and address of TAB firm.

3.3 Project name.

3.4 Project location.

3.5 Architect's name and address.

3.6 Engineer's name and address.

3.7 Contractor's name and address.

3.8 Report date.

3.9 Signature of TAB firm who certifies the report.

3.10 Summary of contents including the following:

A. Indicated versus final performance.

B. Notable characteristics of systems.

C. Description of system operation sequence if it varies from the Contract Documents.

3.11 Nomenclature sheets for each item of equipment.

3.12 Notes to explain why certain final data in the body of reports varies from indicated values.

3.13 Test conditions for fans performance forms including the following:

A. Settings for outside-, return-, and exhaust-air dampers.

B. Conditions of filters.

C. Cooling coil, wet- and dry-bulb conditions.

D. Other system operating conditions that affect performance.

PRODUCT DATA SHEET 5 - System Diagrams: Include schematic layouts of air distribution systems. Present each system with single-line diagram and include the following:

3.1 Quantities of outside, supply, return, and exhaust airflows.

3.2 Duct, outlet, and inlet sizes.

3.3 Balancing stations.

3.4 Position of balancing devices.

PRODUCT DATA SHEET 6 - Air-Handling Unit Test Reports: For air-handling units with coils, include the following:

3.1 Unit Data: Include the following:

A. Unit identification.

B. Location.

C. Make and type.

D. Model number and unit size.

E. Manufacturer's serial number.

F. Unit arrangement and class.

G. Discharge arrangement.

H. Sheave make, size in inches (mm), and bore.

I. Sheave dimensions, center-to-center, and amount of adjustments in inches (mm).

J. Number of belts, make, and size.

K. Number of filters, type, and size.

3.2 Motor Data:

A. Make and frame type and size.

B. Horsepower and rpm.

C. Volts, phase, and hertz.

D. Full-load amperage and service factor.

E. Sheave make, size in inches (mm), and bore.

F. Sheave dimensions, center-to-center, and amount of adjustments in inches (mm).

3.3 Test Data (Indicated and Actual Values):

A. Total airflow rate in cfm (L/s).

B. Total system static pressure in inches wg (Pa).

C. Fan rpm.

D. Discharge static pressure in inches wg (Pa).

E. Outside airflow in cfm (L/s).

F. Return airflow in cfm (L/s).

G. Outside-air damper position.

H. Return-air damper position.

PRODUCT DATA SHEET 7 - Fan Test Reports: For exhaust fans, include the following:

3.1 Fan Data:

A. System identification.

B. Location.

C. Make and type.

D. Model number and size.

E. Manufacturer's serial number.

F. Arrangement and class.

G. Sheave make, size in inches (mm), and bore.

H. Sheave dimensions, center-to-center, and amount of adjustments in inches (mm).

3.2 Motor Data:

A. Make and frame type and size.

B. Horsepower and rpm.

C. Volts, phase, and hertz.

D. Full-load amperage and service factor.

E. Sheave make, size in inches (mm), and bore.

F. Sheave dimensions, center-to-center, and amount of adjustments in inches (mm).

G. Number of belts, make, and size.

3.3 Test Data (Indicated and Actual Values):

A. Total airflow rate in cfm (L/s).

B. Total system static pressure in inches wg (Pa).

C. Fan rpm.

D. Discharge static pressure in inches wg (Pa).

E. Suction static pressure in inches wg (Pa).

PRODUCT DATA SHEET 8 - Round and Rectangular Duct Traverse Reports: Include a diagram with a grid representing the duct cross-section and record the following:

3.1 Report Data:

A. System and air-handling unit number.

B. Location and zone.

C. Traverse air temperature in deg F (deg C).

D. Duct static pressure in inches wg (Pa).

E. Duct size in inches (mm).

F. Duct area in sq. ft. (sq. m).

G. Indicated airflow rate in cfm (L/s).

H. Indicated velocity in fpm (m/s).

I. Actual airflow rate in cfm (L/s).

J. Actual average velocity in fpm (m/s).

K. Barometric pressure in psig (Pa).

END OF SECTION 23 05 93

SECTION 23 07 00 - HVAC INSULATION

PART 1 - GENERAL

SCHEDULE 1 - RELATED DOCUMENTS:

PRODUCT DATA SHEET 1 - Drawings and general provisions of the Contract, including General and Supplementary Conditions and Division 1 Specification Sections, apply to this Section.

SCHEDULE 2 - SUMMARY:

PRODUCT DATA SHEET 1 - This Section includes mechanical insulation for duct, equipment, and pipe, including the following:

1.1 Insulation Materials:

A. Flexible elastomeric.

B. Mineral fiber.

1.2 Insulating cements.

1.3 Adhesives.

1.4 Mastics.

1.5 Lagging adhesives.

1.6 Sealants.

1.7 Factory-applied jackets.

1.8 Field-applied fabric-reinforcing mesh.

1.9 Field-applied cloths.

1.10 Field-applied jackets.

1.11 Tapes.

1.12 Securements.

1.13 Corner angles.

SCHEDULE 3 - DEFINITIONS:

PRODUCT DATA SHEET 1 - ASJ: All-service jacket.

PRODUCT DATA SHEET 2 - FSK: Foil, scrim, kraft paper.

PRODUCT DATA SHEET 3 - FSP: Foil, scrim, polyethylene.

PRODUCT DATA SHEET 4 - PVDC: Polyvinylidene chloride.

PRODUCT DATA SHEET 5 - SSL: Self-sealing lap.

SCHEDULE 4 - SUBMITTALS:

PRODUCT DATA SHEET 1 - Product Data: For each type of product indicated, identify thermal conductivity, thickness, and jackets (both factory and field applied, if any).

PRODUCT DATA SHEET 2 - Shop Drawings: Show details for the following:

1.1 Application of protective shields, saddles, and inserts at hangers for each type of insulation and hanger.

1.2 Attachment and covering of heat tracing inside insulation.

1.3 Insulation application at pipe expansion joints for each type of insulation.

1.4 Insulation application at elbows, fittings, flanges, valves, and specialties for each type of insulation.

1.5 Removable insulation at piping specialties, equipment connections, and access panels.

1.6 Application of field-applied jackets.

1.7 Field application for each equipment type.

PRODUCT DATA SHEET 3 - Installer Certificates: Signed by Contractor certifying that installers comply with requirements.

PRODUCT DATA SHEET 4 - Material Test Reports: From a qualified testing agency acceptable to authorities having jurisdiction indicating, interpreting, and certifying test results for compliance of insulation materials, sealers, attachments, cements, and jackets, with requirements indicated. Include dates of tests and test methods employed.

PRODUCT DATA SHEET 5 - Field quality-control inspection reports.

SCHEDULE 5 - QUALITY ASSURANCE:

PRODUCT DATA SHEET 1 - Installer Qualifications: Skilled mechanics who have successfully completed an apprenticeship program or another craft training program certified by the Department of Labor, Bureau of Apprenticeship and Training.

PRODUCT DATA SHEET 2 - Fire-Test-Response Characteristics: Insulation and related materials shall have fire-test-response characteristics indicated, as determined by testing identical products per ASTM E 84, by a testing and inspecting agency acceptable to authorities having jurisdiction. Factory label insulation and jacket materials and adhesive, mastic, and cement material containers, with appropriate markings of applicable testing and inspecting agency.

1.1 Insulation Installed Indoors: Flame-spread index of 25 or less, and smoke-developed index of 50 or less.

1.2 Insulation Installed Outdoors: Flame-spread index of 75 or less, and smoke-developed index of 150 or less.

SCHEDULE 6 - DELIVERY, STORAGE, AND HANDLING:

PRODUCT DATA SHEET 1 - Packaging: Insulation material containers shall be marked by manufacturer with appropriate ASTM standard designation, type and grade, and maximum use temperature.

SCHEDULE 7 - COORDINATION:

PRODUCT DATA SHEET 1 - Coordinate size and location of supports, hangers, and insulation shields specified in Division 23 Section "Hangers and Supports."

PRODUCT DATA SHEET 2 - Coordinate clearance requirements with piping Installer for piping insulation application, duct Installer for duct insulation application, and equipment Installer for equipment insulation application. Before preparing piping and ductwork Shop Drawings, establish and maintain clearance requirements for installation of insulation and field-applied jackets and finishes and for space required for maintenance.

PRODUCT DATA SHEET 3 - Coordinate installation and testing of heat tracing.

SCHEDULE 8 - SCHEDULING:

PRODUCT DATA SHEET 1 - Schedule insulation application after pressure testing systems and, where required, after installing and testing heat tracing. Insulation application may begin on segments that have satisfactory test results.

PRODUCT DATA SHEET 2 - Complete installation and concealment of plastic materials as rapidly as possible in each area of construction.

PART 2 - PRODUCTS

SCHEDULE 1 - MANUFACTURERS:

PRODUCT DATA SHEET 1 - In other Part 2 articles where titles below introduce lists, the following requirements apply to product selection:

2.1 Products: Subject to compliance with requirements, provide one of the products specified.

2.2 Manufacturers: Subject to compliance with requirements, provide products by one of the manufacturers specified.

SCHEDULE 2 - INSULATION MATERIALS:

PRODUCT DATA SHEET 1 - Refer to Part 3 schedule articles for requirements about where insulating materials shall be applied.

PRODUCT DATA SHEET 2 - Products shall not contain asbestos, lead, mercury, or mercury compounds.

PRODUCT DATA SHEET 3 - Products that come in contact with stainless steel shall have a leachable chloride content of less than 50 ppm when tested according to ASTM C 871.

PRODUCT DATA SHEET 4 - Insulation materials for use on austenitic stainless steel shall be qualified as acceptable according to ASTM C 795.

PRODUCT DATA SHEET 5 - Foam insulation materials shall not use CFC or HCFC blowing agents in the manufacturing process.

PRODUCT DATA SHEET 6 - Flexible Elastomeric: Closed-cell, sponge- or expanded-rubber materials. Comply with ASTM C 534, Type I for tubular materials and Type II for sheet materials.

2.1 Products:

A. Aeroflex USA Inc.; Aerocel.

B. Armacell LLC; AP Armaflex.

C. RBX Corporation; Insul-Sheet 1800 and Insul-Tube 180.

PRODUCT DATA SHEET 7 - Mineral-Fiber Blanket Insulation: Mineral or glass fibers bonded with a thermosetting resin. Minimum installed value of R-8. Comply with ASTM C 553, Type II and ASTM C 1290, Type III with factory-applied FSK jacket. Factory-applied jacket requirements are specified in Part 2 "Factory-Applied Jackets" Article.

2.1 Products:

A. Johns Manville; Microlite XG.

B. Johns Manville Microlite EQ.

C. Knauf Insulation; Feel Friendly Duct Wrap.

D. CertainTeed Corp.; Soft Touch Duct Wrap.

E. Owens Corning; SOFTR Duct Wrap FPK CertainTeed Corp.; Duct Wrap.

F. .

SCHEDULE 3 - ADHESIVES:

PRODUCT DATA SHEET 1 - Materials shall be compatible with insulation materials, jackets, and substrates and for bonding insulation to itself and to surfaces to be insulated, unless otherwise indicated.

PRODUCT DATA SHEET 2 - Phenolic-Foam, Polyisocyanurate, and Polystyrene Adhesive: Solvent-based resin adhesive, with a service temperature range of minus 75 to plus 300 deg F (minus 59 to plus 149 deg C).

2.1 Products:

A. Childers Products, Division of ITW; CP-96.

B. Foster Products Corporation, H. B. Fuller Company; 81-33.

PRODUCT DATA SHEET 3 - Mineral-Fiber Adhesive: Comply with MIL-A-3316C, Class 2, Grade A.

2.1 Products:

A. Childers Products, Division of ITW; CP-82.

B. Foster Products Corporation, H. B. Fuller Company; 85-20.

C. ITW TACC, Division of Illinois Tool Works; S-90/80.

D. Marathon Industries, Inc.; 225.

E. Mon-Eco Industries, Inc.; 22-25.

PRODUCT DATA SHEET 4 - ASJ Adhesive, and FSK and PVDC Jacket Adhesive: Comply with MIL-A-3316C, Class 2, Grade A for bonding insulation jacket lap seams and joints.

2.1 Products:

A. Childers Products, Division of ITW; CP-82.

B. Foster Products Corporation, H. B. Fuller Company; 85-20.

C. ITW TACC, Division of Illinois Tool Works; S-90/80.

D. Marathon Industries, Inc.; 225.

E. Mon-Eco Industries, Inc.; 22-25.

SCHEDULE 4 - MASTICS:

PRODUCT DATA SHEET 1 - Materials shall be compatible with insulation materials, jackets, and substrates; comply with MIL-C-19565C, Type II.

PRODUCT DATA SHEET 2 - Vapor-Barrier Mastic: Water based; suitable for indoor and outdoor use on below ambient services.

2.1 Products:

A. Childers Products, Division of ITW; CP-35.

B. Foster Products Corporation, H. B. Fuller Company; 30-90.

C. ITW TACC, Division of Illinois Tool Works; CB-50.

D. Marathon Industries, Inc.; 590.

E. Mon-Eco Industries, Inc.; 55-40.

F. Vimasco Corporation; 749.

2.2 Water-Vapor Permeance: ASTM E 96, Procedure B, 0.013 perm (0.009 metric perm) at 43-mil (1.09-mm) dry film thickness.

2.3 Service Temperature Range: Minus 20 to plus 180 deg F (Minus 29 to plus 82 deg C).

2.4 Solids Content: ASTM D 1644, 59 percent by volume and 71 percent by weight.

2.5 Color: White.

PRODUCT DATA SHEET 3 - Vapor-Barrier Mastic: Solvent based; suitable for indoor use on below ambient services.

2.1 Products:

A. Childers Products, Division of ITW; CP-30.

B. Foster Products Corporation, H. B. Fuller Company; 30-35.

C. ITW TACC, Division of Illinois Tool Works; CB-25.

D. Marathon Industries, Inc.; 501.

E. Mon-Eco Industries, Inc.; 55-10.

2.2 Water-Vapor Permeance: ASTM F 1249, 0.05 perm (0.03 metric perm) at 35-mil (0.9-mm) dry film thickness.

2.3 Service Temperature Range: 0 to 180 deg F (Minus 18 to plus 82 deg C).

2.4 Solids Content: ASTM D 1644, 44 percent by volume and 62 percent by weight.

2.5 Color: White.

SCHEDULE 5 - SEALANTS:

PRODUCT DATA SHEET 1 - Joint Sealants:

2.1 Available Joint Sealants for Cellular-Glass, Phenolic-Foam, and Polyisocyanurate Products:

A. Childers Products, Division of ITW; CP-76.

B. Foster Products Corporation, H. B. Fuller Company; 30-45.

C. Marathon Industries, Inc.; 405.

D. Mon-Eco Industries, Inc.; 44-05.

E. Pittsburgh Corning Corporation; Pittseal 444.

F. Vimasco Corporation; 750.

2.2 Materials shall be compatible with insulation materials, jackets, and substrates.

2.3 Permanently flexible, elastomeric sealant.

2.4 Service Temperature Range: Minus 100 to plus 300 deg F (Minus 73 to plus 149 deg C).

2.5 Color: White or gray.

PRODUCT DATA SHEET 2 - FSK and Metal Jacket Flashing Sealants:

2.1 Products:

A. Childers Products, Division of ITW; CP-76-8.

B. Foster Products Corporation, H. B. Fuller Company; 95-44.

C. Marathon Industries, Inc.; 405.

D. Mon-Eco Industries, Inc.; 44-05.

E. Vimasco Corporation; 750.

2.2 Materials shall be compatible with insulation materials, jackets, and substrates.

2.3 Fire- and water-resistant, flexible, elastomeric sealant.

2.4 Service Temperature Range: Minus 40 to plus 250 deg F (Minus 40 to plus 121 deg C).

2.5 Color: Aluminum.

SCHEDULE 6 - FACTORY-APPLIED JACKETS:

PRODUCT DATA SHEET 1 - Insulation system schedules indicate factory-applied jackets on various applications. When factory-applied jackets are indicated, comply with the following:

2.1 ASJ: White, kraft-paper, fiberglass-reinforced scrim with aluminum-foil backing; complying with ASTM C 1136, Type I.

2.2 ASJ-SSL: ASJ with self-sealing, pressure-sensitive, acrylic-based adhesive covered by a removable protective strip; complying with ASTM C 1136, Type I.

2.3 FSK Jacket: Aluminum-foil, fiberglass-reinforced scrim with kraft-paper backing; complying with ASTM C 1136, Type II.

A. Products:

1. Dow Chemical Company (The); Saran 540 Vapor Retarder Film and Saran 560 Vapor Retarder Film.

2.4 Vinyl Jacket: UL-rated white vinyl with a permeance of 1.3 perms (0.86 metric perms) when tested according to ASTM E 96, Procedure A, and complying with NFPA 90A and NFPA 90B.

SCHEDULE 7 - TAPES:

PRODUCT DATA SHEET 1 - ASJ Tape: White vapor-retarder tape matching factory-applied jacket with acrylic adhesive, complying with ASTM C 1136 and UL listed.

2.1 Products:

A. Avery Dennison Corporation, Specialty Tapes Division; Fasson 0835.

B. Compac Corp.; 104 and 105.

C. Ideal Tape Co., Inc., an American Biltrite Company; 428 AWF ASJ.

D. Venture Tape; 1540 CW Plus, 1542 CW Plus, and 1542 CW Plus/SQ.

2.2 Width: 3 inches (75 mm).

2.3 Thickness: 11.5 mils (0.29 mm).

2.4 Adhesion: 90 ounces force/inch (1.0 N/mm) in width.

2.5 Elongation: 2 percent.

2.6 Tensile Strength: 40 lbf/inch (7.2 N/mm) in width.

2.7 ASJ Tape Disks and Squares: Precut disks or squares of ASJ tape.

PRODUCT DATA SHEET 2 - FSK Tape: Foil-face, vapor-retarder tape matching factory-applied jacket with acrylic adhesive; complying with ASTM C 1136 and UL listed.

2.1 Products:

A. Avery Dennison Corporation, Specialty Tapes Division; Fasson 0827.

B. Compac Corp.; 110 and 111.

C. Ideal Tape Co., Inc., an American Biltrite Company; 491 AWF FSK.

D. Venture Tape; 1525 CW, 1528 CW, and 1528 CW/SQ.

2.2 Width: 3 inches (75 mm).

2.3 Thickness: 6.5 mils (0.16 mm).

2.4 Adhesion: 90 ounces force/inch (1.0 N/mm) in width.

2.5 Elongation: 2 percent.

2.6 Tensile Strength: 40 lbf/inch (7.2 N/mm) in width.

2.7 FSK Tape Disks and Squares: Precut disks or squares of FSK tape.

SCHEDULE 8 - SECUREMENTS:

PRODUCT DATA SHEET 1 - Bands:

2.1 Products:

A. Childers Products; Bands.

B. PABCO Metals Corporation; Bands.

C. RPR Products, Inc.; Bands.

2.2 Aluminum: ASTM B 209 (ASTM B 209M), Alloy 3003, 3005, 3105, or 5005; Temper H-14, 0.020 inch (0.51 mm) thick, 1/2 inch (13 mm) wide with wing seal.

2.3 Springs: Twin spring set constructed of stainless steel with ends flat and slotted to accept metal bands. Spring size determined by manufacturer for application.

PRODUCT DATA SHEET 2 - Insulation Pins and Hangers:

2.1 Capacitor-Discharge-Weld Pins: Copper- or zinc-coated steel pin, fully annealed for capacitor-discharge welding, 0.106-inch- (2.6-mm-) diameter shank, length to suit depth of insulation indicated.

A. Products:

1. AGM Industries, Inc.; CWP-1.

2. GEMCO; CD.

3. Midwest Fasteners, Inc.; CD.

4. Nelson Stud Welding; TPA, TPC, and TPS.

2.2 Cupped-Head, Capacitor-Discharge-Weld Pins: Copper- or zinc-coated steel pin, fully annealed for capacitor-discharge welding, 0.106-inch- (2.6-mm-) diameter shank, length to suit depth of insulation indicated with integral 1-1/2-inch (38-mm) galvanized carbon-steel washer.

A. Products:

1. AGM Industries, Inc.; CWP-1.

2. GEMCO; Cupped Head Weld Pin.

3. Midwest Fasteners, Inc.; Cupped Head.

4. Nelson Stud Welding; CHP.

2.3 Metal, Adhesively Attached, Perforated-Base Insulation Hangers: Baseplate welded to projecting spindle that is capable of holding insulation, of thickness indicated, securely in position indicated when self-locking washer is in place. Comply with the following requirements:

A. Products:

1. AGM Industries, Inc.; Tactoo Insul-Hangers, Series T.

2. GEMCO; Perforated Base.

3. Midwest Fasteners, Inc.; Spindle.

B. Baseplate: Perforated, galvanized carbon-steel sheet, 0.030 inch (0.76 mm) thick by 2 inches (50 mm) square.

C. Spindle: Copper- or zinc-coated, low carbon steel, fully annealed, 0.106-inch- (2.6-mm-) diameter shank, length to suit depth of insulation indicated.

D. Adhesive: Recommended by hanger manufacturer. Product with demonstrated capability to bond insulation hanger securely to substrates indicated without damaging insulation, hangers, and substrates.

2.4 Nonmetal, Adhesively Attached, Perforated-Base Insulation Hangers: Baseplate fastened to projecting spindle that is capable of holding insulation, of thickness indicated, securely in position indicated when self-locking washer is in place. Comply with the following requirements:

A. Products:

1. GEMCO; Nylon Hangers.

2. Midwest Fasteners, Inc.; Nylon Insulation Hangers.

B. Baseplate: Perforated, nylon sheet, 0.030 inch (0.76 mm) thick by 1-1/2 inches (38 mm) in diameter.

C. Spindle: Nylon, 0.106-inch- (2.6-mm-) diameter shank, length to suit depth of insulation indicated, up to 2-1/2 inches (63 mm).

D. Adhesive: Recommended by hanger manufacturer. Product with demonstrated capability to bond insulation hanger securely to substrates indicated without damaging insulation, hangers, and substrates.

2.5 Insulation-Retaining Washers: Self-locking washers formed from 0.016-inch- (0.41-mm) thick, galvanized-steel sheet, with beveled edge sized as required to hold insulation securely in place but not less than 1-1/2 inches (38 mm) in diameter.

A. Products:

1. AGM Industries, Inc.; RC-150.

2. GEMCO; R-150.

3. Midwest Fasteners, Inc.; WA-150.

4. Nelson Stud Welding; Speed Clips.

B. Protect ends with capped self-locking washers incorporating a spring steel insert to ensure permanent retention of cap in exposed locations.

2.6 Nonmetal Insulation-Retaining Washers: Self-locking washers formed from 0.016-inch- (0.41-mm-) thick nylon sheet, with beveled edge sized as required to hold insulation securely in place but not less than 1-1/2 inches (38 mm) in diameter.

A. Manufacturers:

1. GEMCO.

2. Midwest Fasteners, Inc.

PRODUCT DATA SHEET 3 - Staples: Outward-clinching insulation staples, nominal 3/4-inch- (19-mm-) wide, stainless steel or Monel.

PRODUCT DATA SHEET 4 - Wire: 0.080-inch (2.0-mm) nickel-copper alloy.

2.1 Manufacturers:

A. ACS Industries, Inc.

B. C & F Wire.

C. Childers Products.

D. PABCO Metals Corporation.

E. RPR Products, Inc.

PART 3 - EXECUTION

SCHEDULE 1 - EXAMINATION:

PRODUCT DATA SHEET 1 - Examine substrates and conditions for compliance with requirements for installation and other conditions affecting performance of insulation application.

3.1 Verify that systems and equipment to be insulated have been tested and are free of defects.

3.2 Verify that surfaces to be insulated are clean and dry.

3.3 Proceed with installation only after unsatisfactory conditions have been corrected.

SCHEDULE 2 - PREPARATION:

PRODUCT DATA SHEET 1 - Surface Preparation: Clean and dry surfaces to receive insulation. Remove materials that will adversely affect insulation application.

PRODUCT DATA SHEET 2 - Surface Preparation: Clean and prepare surfaces to be insulated. Before insulating, apply a corrosion coating to insulated surfaces as follows:

3.1 Stainless Steel: Coat 300 series stainless steel with an epoxy primer 5 mils (0.127 mm) thick and an epoxy finish 5 mils (0.127 mm) thick if operating in a temperature range between 140 and 300 deg F (60 and 149 deg C). Consult coating manufacturer for appropriate coating materials and application methods for operating temperature range.

3.2 Carbon Steel: Coat carbon steel operating at a service temperature between 32 and 300 deg F (0 and 149 deg C) with an epoxy coating. Consult coating manufacturer for appropriate coating materials and application methods for operating temperature range.

PRODUCT DATA SHEET 3 - Coordinate insulation installation with the trade installing heat tracing. Comply with requirements for heat tracing that apply to insulation.

PRODUCT DATA SHEET 4 - Mix insulating cements with clean potable water; if insulating cements are to be in contact with stainless-steel surfaces, use demineralized water.

SCHEDULE 3 - COMMON INSTALLATION REQUIREMENTS:

PRODUCT DATA SHEET 1 - Install insulation materials, accessories, and finishes with smooth, straight, and even surfaces; free of voids throughout the length of equipment, ducts and fittings, and piping including fittings, valves, and specialties.

PRODUCT DATA SHEET 2 - Install insulation materials, forms, vapor barriers or retarders, jackets, and thicknesses required for each item of equipment, duct system, and pipe system as specified in insulation system schedules.

PRODUCT DATA SHEET 3 - Install accessories compatible with insulation materials and suitable for the service. Install accessories that do not corrode, soften, or otherwise attack insulation or jacket in either wet or dry state.

PRODUCT DATA SHEET 4 - Install insulation with longitudinal seams at top and bottom of horizontal runs.

PRODUCT DATA SHEET 5 - Install multiple layers of insulation with longitudinal and end seams staggered.

PRODUCT DATA SHEET 6 - Do not weld brackets, clips, or other attachment devices to piping, fittings, and specialties.

PRODUCT DATA SHEET 7 - Keep insulation materials dry during application and finishing.

PRODUCT DATA SHEET 8 - Install insulation with tight longitudinal seams and end joints. Bond seams and joints with adhesive recommended by insulation material manufacturer.

PRODUCT DATA SHEET 9 - Install insulation with least number of joints practical.

PRODUCT DATA SHEET 10 - Where vapor barrier is indicated, seal joints, seams, and penetrations in insulation at hangers, supports, anchors, and other projections with vapor-barrier mastic.

3.1 Install insulation continuously through hangers and around anchor attachments.

3.2 For insulation application where vapor barriers are indicated, extend insulation on anchor legs from point of attachment to supported item to point of attachment to structure. Taper and seal ends at attachment to structure with vapor-barrier mastic.

3.3 Install insert materials and install insulation to tightly join the insert. Seal insulation to insulation inserts with adhesive or sealing compound recommended by insulation material manufacturer.

3.4 Cover inserts with jacket material matching adjacent pipe insulation. Install shields over jacket, arranged to protect jacket from tear or puncture by hanger, support, and shield.

PRODUCT DATA SHEET 11 - Apply adhesives, mastics, and sealants at manufacturer's recommended coverage rate and wet and dry film thicknesses.

PRODUCT DATA SHEET 12 - Install insulation with factory-applied jackets as follows:

3.1 Draw jacket tight and smooth.

3.2 Cover circumferential joints with 3-inch- (75-mm-) wide strips, of same material as insulation jacket. Secure strips with adhesive and outward clinching staples along both edges of strip, spaced 4 inches (100 mm) o.c.

3.3 Overlap jacket longitudinal seams at least 1-1/2 inches (38 mm). Install insulation with longitudinal seams at bottom of pipe. Clean and dry surface to receive self-sealing lap. Staple laps with outward clinching staples along edge at 2 inches (50 mm) o.c.

A. For below ambient services, apply vapor-barrier mastic over staples.

3.4 Cover joints and seams with tape as recommended by insulation material manufacturer to maintain vapor seal.

3.5 Where vapor barriers are indicated, apply vapor-barrier mastic on seams and joints and at ends adjacent to duct and pipe flanges and fittings.

PRODUCT DATA SHEET 13 - Cut insulation in a manner to avoid compressing insulation more than 75 percent of its nominal thickness.

PRODUCT DATA SHEET 14 - Finish installation with systems at operating conditions. Repair joint separations and cracking due to thermal movement.

PRODUCT DATA SHEET 15 - Repair damaged insulation facings by applying same facing material over damaged areas. Extend patches at least 4 inches (100 mm) beyond damaged areas. Adhere, staple, and seal patches similar to butt joints.

PRODUCT DATA SHEET 16 - For above ambient services, do not install insulation to the following:

3.1 Vibration-control devices.

3.2 Testing agency labels and stamps.

3.3 Nameplates and data plates.

3.4 Manholes.

3.5 Handholes.

3.6 Cleanouts.

SCHEDULE 4 - PENETRATIONS:

PRODUCT DATA SHEET 1 - Insulation Installation at Roof Penetrations: Install insulation continuously through roof penetrations.

3.1 Seal penetrations with flashing sealant.

3.2 For applications requiring only indoor insulation, terminate insulation above roof surface and seal with joint sealant. For applications requiring indoor and outdoor insulation, install insulation for outdoor applications tightly joined to indoor insulation ends. Seal joint with joint sealant.

3.3 Extend jacket of outdoor insulation outside roof flashing at least 2 inches (50 mm) below top of roof flashing.

3.4 Seal jacket to roof flashing with flashing sealant.

PRODUCT DATA SHEET 2 - Insulation Installation at Below-Grade Exterior Wall Penetrations: Terminate insulation flush with sleeve seal. Seal terminations with flashing sealant.

PRODUCT DATA SHEET 3 - Insulation Installation at Aboveground Exterior Wall Penetrations: Install insulation continuously through wall penetrations.

3.1 Seal penetrations with flashing sealant.

3.2 For applications requiring only indoor insulation, terminate insulation inside wall surface and seal with joint sealant. For applications requiring indoor and outdoor insulation, install insulation for outdoor applications tightly joined to indoor insulation ends. Seal joint with joint sealant.

3.3 Extend jacket of outdoor insulation outside wall flashing and overlap wall flashing at least 2 inches (50 mm).

3.4 Seal jacket to wall flashing with flashing sealant.

PRODUCT DATA SHEET 4 - Insulation Installation at Interior Wall and Partition Penetrations (That Are Not Fire Rated): Install insulation continuously through walls and partitions.

PRODUCT DATA SHEET 5 - Insulation Installation at Fire-Rated Wall and Partition Penetrations: Install insulation continuously through penetrations of fire-rated walls and partitions. Terminate insulation at fire damper sleeves for fire-rated wall and partition penetrations. Externally insulate damper sleeves to match adjacent insulation and overlap duct insulation at least 2 inches (50 mm).

3.1 Firestopping and fire-resistive joint sealers are specified in Division 7 Section "Through-Penetration Firestop Systems."

SCHEDULE 5 - DUCT AND PLENUM INSULATION INSTALLATION:

PRODUCT DATA SHEET 1 - Blanket Insulation Installation on Ducts and Plenums: Secure with adhesive and insulation pins.

3.1 Apply adhesives according to manufacturer's recommended coverage rates per unit area, for 100 percent coverage of duct and plenum surfaces.

3.2 Apply adhesive to entire circumference of ducts and to all surfaces of fittings and transitions.

3.3 Install either capacitor-discharge-weld pins and speed washers or cupped-head, capacitor-discharge-weld pins on sides and bottom of horizontal ducts and sides of vertical ducts as follows:

A. On duct sides with dimensions 18 inches (450 mm) and smaller, place pins along longitudinal centerline of duct. Space 3 inches (75 mm) maximum from insulation end joints, and 16 inches (400 mm) o.c.

B. On duct sides with dimensions larger than 18 inches (450 mm), place pins 16 inches (400 mm) o.c. each way, and 3 inches (75 mm) maximum from insulation joints. Install additional pins to hold insulation tightly against surface at cross bracing.

SCHEDULE 6 - EQUIPMENT INSULATION INSTALLATION:

PRODUCT DATA SHEET 1 - Secure insulation with adhesive and anchor pins and speed washers.

3.1 Groove and score insulation materials to fit as closely as possible to equipment, including contours. Bevel insulation edges for cylindrical surfaces for tight joints. Stagger end joints.

3.2 Protect exposed corners with secured corner angles.

3.3 Secure each layer of insulation with stainless-steel or aluminum bands. Select band material compatible with insulation materials.

3.4 Where insulation hangers on equipment are not permitted or practical and where insulation support rings are not provided, install a girdle network for securing insulation. Stretch pres-tressed aircraft cable around the diameter of equipment and make taut with clamps, turnbuckles, or breather springs. Place one circumferential girdle around equipment

approximately 6 inches (150 mm) from each end. Install wire or cable between two circumferential girdles 12 inches (300 mm) o.c. Install a wire ring around each end and around outer periphery of center openings, and stretch pre-stressed aircraft cable radially from the wire ring to nearest circumferential girdle. Install additional circumferential girdles along the body of equipment at a minimum spacing of 48 inches (1200 mm) o.c. Use this network for securing insulation with tie wire or bands.

3.5 Stagger joints between insulation layers at least 3 inches (75 mm).

3.6 Install insulation in removable segments on equipment access doors, manholes, handholes, and other elements that require frequent removal for service and inspection.

3.7 Bevel and seal insulation ends around manholes, handholes, ASME stamps, and nameplates.

3.8 For equipment with surface temperatures below ambient, apply mastic to open ends, joints, seams, breaks, and punctures in insulation.

SCHEDULE 7 - GENERAL PIPE INSULATION INSTALLATION:

PRODUCT DATA SHEET 1 - Requirements in this Article generally apply to all insulation materials except where more specific requirements are specified in various pipe insulation material installation articles.

PRODUCT DATA SHEET 2 - Insulation Installation on Fittings, Valves, Strainers, Flanges, and Unions:

3.1 Install insulation over fittings, valves, strainers, flanges, unions, and other specialties with continuous thermal and vapor-retarder integrity, unless otherwise indicated.

3.2 Insulate pipe elbows using preformed fitting insulation or mitered fittings made from same material and density as adjacent pipe insulation. Each piece shall be butted tightly against adjoining piece and bonded with adhesive. Fill joints, seams, voids, and irregular surfaces with insulating cement finished to a smooth, hard, and uniform contour that is uniform with adjoining pipe insulation.

3.3 Insulate tee fittings with preformed fitting insulation or sectional pipe insulation of same material and thickness as used for adjacent pipe. Cut sectional pipe insulation to fit. Butt each section closely to the next and hold in place with tie wire. Bond pieces with adhesive.

3.4 Insulate valves using preformed fitting insulation or sectional pipe insulation of same material, density, and thickness as used for adjacent pipe. Overlap adjoining pipe insulation by not less than two times the thickness of pipe insulation, or one pipe diameter, whichever is thicker. For valves, insulate up to and including the bonnets, valve stuffing-box studs, bolts, and nuts. Fill joints, seams, and irregular surfaces with insulating cement.

3.5 Insulate strainers using preformed fitting insulation or sectional pipe insulation of same material, density, and thickness as used for adjacent pipe. Overlap adjoining pipe insulation by not less than two times the thickness of pipe insulation, or one pipe diameter, whichever is thicker. Fill joints, seams, and irregular surfaces with insulating cement. Insulate strainers so strainer basket flange or plug can be easily removed and replaced without damaging the insulation and jacket. Provide a removable reusable insulation cover. For below ambient services, provide a design that maintains vapor barrier.

3.6 Insulate flanges and unions using a section of oversized preformed pipe insulation. Overlap adjoining pipe insulation by not less than two times the thickness of pipe insulation, or one pipe diameter, whichever is thicker.

3.7 Cover segmented insulated surfaces with a layer of finishing cement and coat with a mastic. Install vapor-barrier mastic for below ambient services and a breather mastic for above ambient services. Reinforce the mastic with fabric-reinforcing mesh. Trowel the mastic to a smooth and well-shaped contour.

3.8 For services not specified to receive a field-applied jacket except for flexible elastomeric and polyolefin, install fitted PVC cover over elbows, tees, strainers, valves, flanges, and unions. Terminate ends with PVC end caps. Tape PVC covers to adjoining insulation facing using PVC tape.

3.9 Stencil or label the outside insulation jacket of each union with the word "UNION." Match size and color of pipe labels.

PRODUCT DATA SHEET 3 - Insulate instrument connections for thermometers, pressure gages, pressure temperature taps, test connections, flow meters, sensors, switches, and transmitters on insulated pipes, vessels, and equipment. Shape insulation at these connections by tapering it to and around the connection with insulating cement and finish with finishing cement, mastic, and flashing sealant.

PRODUCT DATA SHEET 4 - Install removable insulation covers at locations indicated. Installation shall conform to the following:

3.1 Make removable flange and union insulation from sectional pipe insulation of same thickness as that on adjoining pipe. Install same insulation jacket as adjoining pipe insulation.

3.2 When flange and union covers are made from sectional pipe insulation, extend insulation from flanges or union long at least two times the insulation thickness over adjacent pipe insulation on each side of flange or union. Secure flange cover in place with stainless-steel or aluminum bands. Select band material compatible with insulation and jacket.

3.3 Construct removable valve insulation covers in same manner as for flanges except divide the two-part section on the vertical center line of valve body.

3.4 When covers are made from block insulation, make two halves, each consisting of mitered blocks wired to stainless-steel fabric. Secure this wire frame, with its attached insulation, to flanges with tie wire. Extend insulation at least 2 inches (50 mm) over adjacent pipe insulation on each side of valve. Fill space between flange or union cover and pipe insulation with insulating cement. Finish cover assembly with insulating cement applied in two coats. After first coat is dry, apply and trowel second coat to a smooth finish.

3.5 Unless a PVC jacket is indicated in field-applied jacket schedules, finish exposed surfaces with a metal jacket.

SCHEDULE 8 - FLEXIBLE ELASTOMERIC INSULATION INSTALLATION:

PRODUCT DATA SHEET 1 - Seal longitudinal seams and end joints with manufacturer's recommended adhesive to eliminate openings in insulation that allow passage of air to surface being insulated.

PRODUCT DATA SHEET 2 - Insulation Installation on Pipe Flanges:

3.1 Install pipe insulation to outer diameter of pipe flange.

3.2 Make width of insulation section same as overall width of flange and bolts, plus twice the thickness of pipe insulation.

3.3 Fill voids between inner circumference of flange insulation and outer circumference of adjacent straight pipe segments with cut sections of sheet insulation of same thickness as pipe insulation.

3.4 Secure insulation to flanges and seal seams with manufacturer's recommended adhesive to eliminate openings in insulation that allow passage of air to surface being insulated.

PRODUCT DATA SHEET 3 - Insulation Installation on Pipe Fittings and Elbows:

3.1 Install mitered sections of pipe insulation.

3.2 Secure insulation materials and seal seams with manufacturer's recommended adhesive to eliminate openings in insulation that allow passage of air to surface being insulated.

PRODUCT DATA SHEET 4 - Insulation Installation on Valves and Pipe Specialties:

3.1 Install preformed valve covers manufactured of same material as pipe insulation when available.

3.2 When preformed valve covers are not available, install cut sections of pipe and sheet insulation to valve body. Arrange insulation to permit access to packing and to allow valve operation without disturbing insulation.

3.3 Install insulation to flanges as specified for flange insulation application.

3.4 Secure insulation to valves and specialties and seal seams with manufacturer's recommended adhesive to eliminate openings in insulation that allow passage of air to surface being insulated.

SCHEDULE 9 - MINERAL-FIBER INSULATION INSTALLATION:

PRODUCT DATA SHEET 1 - Insulation Installation on Straight Pipes and Tubes:

3.1 Secure each layer of preformed pipe insulation to pipe with wire or bands and tighten bands without deforming insulation materials.

3.2 Where vapor barriers are indicated, seal longitudinal seams, end joints, and protrusions with vapor-barrier mastic and joint sealant.

3.3 For insulation with factory-applied jackets on above ambient surfaces, secure laps with outward clinched staples at 6 inches (150 mm) o.c.

3.4 For insulation with factory-applied jackets on below ambient surfaces, do not staple longitudinal tabs but secure tabs with additional adhesive as recommended by insulation material manufacturer and seal with vapor-barrier mastic and flashing sealant.

PRODUCT DATA SHEET 2 - Insulation Installation on Pipe Flanges:

3.1 Install preformed pipe insulation to outer diameter of pipe flange.

3.2 Make width of insulation section same as overall width of flange and bolts, plus twice the thickness of pipe insulation.

3.3 Fill voids between inner circumference of flange insulation and outer circumference of adjacent straight pipe segments with mineral-fiber blanket insulation.

3.4 Install jacket material with manufacturer's recommended adhesive, overlap seams at least 1 inch (25 mm), and seal joints with flashing sealant.

PRODUCT DATA SHEET 3 - Insulation Installation on Pipe Fittings and Elbows:

3.1 Install preformed sections of same material as straight segments of pipe insulation when available.

3.2 When preformed insulation elbows and fittings are not available, install mitered sections of pipe insulation, to a thickness equal to adjoining pipe insulation. Secure insulation materials with wire or bands.

PRODUCT DATA SHEET 4 - Insulation Installation on Valves and Pipe Specialties:

3.1 Install preformed sections of same material as straight segments of pipe insulation when available.

3.2 When preformed sections are not available, install mitered sections of pipe insulation to valve body.

3.3 Arrange insulation to permit access to packing and to allow valve operation without disturbing insulation.

3.4 Install insulation to flanges as specified for flange insulation application.

PRODUCT DATA SHEET 5 - Blanket Insulation Installation on Ducts and Plenums: Secure with adhesive and insulation pins.

3.1 Apply adhesives according to manufacturer's recommended coverage rates per unit area, for 100 percent coverage of duct and plenum surfaces.

3.2 Apply adhesive to entire circumference of ducts and to all surfaces of fittings and transitions.

3.3 Install either capacitor-discharge-weld pins and speed washers or cupped-head, capacitor-discharge-weld pins on sides and bottom of horizontal ducts and sides of vertical ducts as follows:

A. On duct sides with dimensions 18 inches (450 mm) and smaller, place pins along longitudinal centerline of duct. Space 3 inches (75 mm) maximum from insulation end joints, and 16 inches (400 mm) o.c.

B. On duct sides with dimensions larger than 18 inches (450 mm), place pins 16 inches (400 mm) o.c. each way, and 3 inches (75 mm) maximum from insulation joints. Install additional pins to hold insulation tightly against surface at cross bracing.

C. Pins may be omitted from top surface of horizontal, rectangular ducts and plenums.

D. Do not overcompress insulation during installation.

E. Impale insulation over pins and attach speed washers.

F. Cut excess portion of pins extending beyond speed washers or bend parallel with insulation surface. Cover exposed pins and washers with tape matching insulation facing.

3.4 For ducts and plenums with surface temperatures below ambient, install a continuous unbroken vapor barrier. Create a facing lap for longitudinal seams and end joints with insulation by removing 2 inches (50 mm) from 1 edge and 1 end of insulation segment. Secure laps to adjacent insulation section with 1/2-inch (13-mm) outward-clinching staples, 1 inch (25 mm) o.c. Install vapor barrier consisting of factory- or field-applied jacket, adhesive, vapor-barrier mastic, and sealant at joints, seams, and protrusions.

A. Repair punctures, tears, and penetrations with tape or mastic to maintain vapor-barrier seal.

B. Install vapor stops for ductwork and plenums operating below 50 deg F (10 deg C) at 18-foot (5.5-m) intervals. Vapor stops shall consist of vapor-barrier mastic applied in a Z-shaped pattern over insulation face, along butt end of insulation, and over the surface. Cover insulation face and surface to be insulated a width equal to 2 times the insulation thickness but not less than 3 inches (75 mm).

3.5 Overlap unfaced blankets a minimum of 2 inches (50 mm) on longitudinal seams and end joints. At end joints, secure with steel bands spaced a maximum of 18 inches (450 mm) o.c.

3.6 Install insulation on rectangular duct elbows and transitions with a full insulation section for each surface. Install insulation on round and flat-oval duct elbows with individually mitered gores cut to fit the elbow.

3.7 Insulate duct stiffeners, hangers, and flanges that protrude beyond insulation surface with 6-inch- (150-mm-) wide strips of same material used to insulate duct. Secure on alternating sides of stiffener, hanger, and flange with pins spaced 6 inches (150 mm) o.c.

PRODUCT DATA SHEET 6 - Board Insulation Installation on Ducts and Plenums: Secure with adhesive and insulation pins.

3.1 Apply adhesives according to manufacturer's recommended coverage rates per unit area, for 100 percent coverage of duct and plenum surfaces.

3.2 Apply adhesive to entire circumference of ducts and to all surfaces of fittings and transitions.

3.3 Install either capacitor-discharge-weld pins and speed washers or cupped-head, capacitor-discharge-weld pins on sides and bottom of horizontal ducts and sides of vertical ducts as follows:

A. On duct sides with dimensions 18 inches (450 mm) and smaller, place pins along longitudinal centerline of duct. Space 3 inches (75 mm) maximum from insulation end joints, and 16 inches (400 mm) o.c.

B. On duct sides with dimensions larger than 18 inches (450 mm), space pins 16 inches (400 mm) o.c. each way, and 3 inches (75 mm) maximum from insulation joints. Install additional pins to hold insulation tightly against surface at cross bracing.

C. Pins may be omitted from top surface of horizontal, rectangular ducts and plenums.

D. Do not overcompress insulation during installation.

E. Cut excess portion of pins extending beyond speed washers or bend parallel with insulation surface. Cover exposed pins and washers with tape matching insulation facing.

3.4 For ducts and plenums with surface temperatures below ambient, install a continuous unbroken vapor barrier. Create a facing lap for longitudinal seams and end joints with insulation by removing 2 inches (50 mm) from 1 edge and 1 end of insulation segment. Secure laps to adjacent insulation section with 1/2-inch (13-mm) outward-clinching staples, 1 inch (25 mm) o.c. Install vapor barrier consisting of factory- or field-applied jacket, adhesive, vapor-barrier mastic, and sealant at joints, seams, and protrusions.

A. Repair punctures, tears, and penetrations with tape or mastic to maintain vapor-barrier seal.

B. Install vapor stops for ductwork and plenums operating below 50 deg F (10 deg C) at 18-foot (5.5-m) intervals. Vapor stops shall consist of vapor-barrier mastic applied in a Z-shaped pattern over insulation face, along butt end of insulation, and over the surface. Cover insulation face and surface to be insulated a width equal to 2 times the insulation thickness but not less than 3 inches (75 mm).

3.5 Install insulation on rectangular duct elbows and transitions with a full insulation section for each surface. Groove and score insulation to fit as closely as possible to outside and inside radius of elbows. Install insulation on round and flat-oval duct elbows with individually mitered gores cut to fit the elbow.

3.6 Insulate duct stiffeners, hangers, and flanges that protrude beyond insulation surface with 6-inch- (150-mm-) wide strips of same material used to insulate duct. Secure on alternating sides of stiffener, hanger, and flange with pins spaced 6 inches (150 mm) o.c.

SCHEDULE 10 - FIELD-APPLIED JACKET INSTALLATION:

PRODUCT DATA SHEET 1 - Where glass-cloth jackets are indicated, install directly over bare insulation or insulation with factory-applied jackets.

3.1 Draw jacket smooth and tight to surface with 2-inch (50-mm) overlap at seams and joints.

3.2 Embed glass cloth between two 0.062-inch- (1.6-mm-) thick coats of lagging adhesive.

3.3 Completely encapsulate insulation with coating, leaving no exposed insulation.

PRODUCT DATA SHEET 2 - Where FSK jackets are indicated, install as follows:

3.1 Draw jacket material smooth and tight.

3.2 Install lap or joint strips with same material as jacket.

3.3 Secure jacket to insulation with manufacturer's recommended adhesive.

3.4 Install jacket with 1-1/2-inch (38-mm) laps at longitudinal seams and 3-inch- (75-mm-) wide joint strips at end joints.

3.5 Seal openings, punctures, and breaks in vapor-retarder jackets and exposed insulation with vapor-barrier mastic.

PRODUCT DATA SHEET 3 - Where PVC jackets are indicated, install with 1-inch (25-mm) overlap at longitudinal seams and end joints; for horizontal applications, install with longitudinal seams along top and bottom of tanks and vessels. Seal with manufacturer's recommended adhesive.

3.1 Apply two continuous beads of adhesive to seams and joints, one bead under lap and the finish bead along seam and joint edge.

PRODUCT DATA SHEET 4 - Where metal jackets are indicated, install with 2-inch (50-mm) overlap at longitudinal seams and end joints. Overlap longitudinal seams arranged to shed water. Seal end joints with weatherproof sealant recommended by insulation manufacturer. Secure jacket with stainless-steel bands 12 inches (300 mm) o.c. and at end joints.

PRODUCT DATA SHEET 5 - Where PVDC jackets are indicated, install as follows:

3.1 Apply three separate wraps of filament tape per insulation section to secure pipe insulation to pipe prior to installation of PVDC jacket.

3.2 Wrap factory-presized jackets around individual pipe insulation sections with one end overlapping the previously installed sheet. Install presized jacket with an approximate overlap at butt joint of 2 inches (50 mm) over the previous section. Adhere lap seal using adhesive or SSL, and then apply 1-1/4 circumferences of appropriate PVDC tape around overlapped butt joint.

3.3 Continuous jacket can be spiral wrapped around a length of pipe insulation. Apply adhesive or PVDC tape at overlapped spiral edge. When electing to use adhesives, refer to manufacturer's written instructions for application of adhesives along this spiral edge to maintain a permanent bond.

3.4 Jacket can be wrapped in cigarette fashion along length of roll for insulation systems with an outer circumference of 33-1/2 inches (850 mm) or less. The 33-1/2-inch- (850-mm-) circumference limit allows for 2-inch- (50-mm-) overlap seal. Using the length of roll allows for longer sections of jacket to be installed at one time. Use adhesive on the lap seal. Visually inspect lap seal for "fishmouthing," and use PVDC tape along lap seal to secure joint.

3.5 Repair holes or tears in PVDC jacket by placing PVDC tape over the hole or tear and wrapping a minimum of 1-1/4 circumferences to avoid damage to tape edges.

SCHEDULE 11 - DUCT INSULATION SCHEDULE, GENERAL:

PRODUCT DATA SHEET 1 - Plenums and Ducts Requiring Insulation:

3.1 Indoor, concealed supply and return air.

PRODUCT DATA SHEET 2 - Items Not Insulated:

3.1 Fibrous-glass ducts.

3.2 Factory-insulated flexible ducts.

3.3 Factory-insulated plenums and casings.

3.4 Flexible connectors.

3.5 Vibration-control devices.

3.6 Factory-insulated access panels and doors.

SCHEDULE 12 - INDOOR DUCT AND PLENUM INSULATION SCHEDULE:

PRODUCT DATA SHEET 1 - Concealed, round supply-air duct insulation shall be the following:

3.1 Mineral-Fiber Blanket: 3 inches thick and 0.75 lb/cu. ft. nominal density.

PRODUCT DATA SHEET 2 - Concealed, round return-air duct insulation shall be any of the following:

3.1 Mineral-Fiber Blanket: 3 inches thick and 0.75lb/cu. ft. nominal density.

PRODUCT DATA SHEET 3 - Concealed, rectangular, supply-air and return-air duct insulation shall be the following:

3.1 Mineral-Fiber Blanket: 3 inches thick and 0.75b/cu. ft. nominal density.

SCHEDULE 13 - EQUIPMENT INSULATION SCHEDULE:

PRODUCT DATA SHEET 1 - Insulation materials and thicknesses are identified below. If more than one material is listed for a type of equipment, selection from materials listed is Contractor's option.

PRODUCT DATA SHEET 2 - Insulate indoor and outdoor equipment in paragraphs below that is not factory insulated.

PRODUCT DATA SHEET 3 - Domestic hot-water hydropneumatic tank insulation shall be the following:

3.1 Flexible Elastomeric Insulation: 2-inches thick.

SCHEDULE 14 - PIPING INSULATION SCHEDULE, GENERAL:

PRODUCT DATA SHEET 1 - Acceptable preformed pipe and tubular insulation materials and thicknesses are identified for each piping system and pipe size range. If more than one material is listed for a piping system, selection from materials listed is Contractor's option.

PRODUCT DATA SHEET 2 - Items Not Insulated: Unless otherwise indicated, do not install insulation on the following:

3.1 Fire-suppression piping.

3.2 Drainage piping located in crawl spaces.

3.3 Below-grade piping.

3.4 Chrome-plated pipes and fittings unless there is a potential for personnel injury.

SCHEDULE 15 - INDOOR PIPING INSULATION SCHEDULE:

PRODUCT DATA SHEET 1 - Refrigerant Suction and Hot-Gas Piping:

3.1 All Pipe Sizes: Insulation shall be the following:

3.2 Flexible Elastomeric: 1 inch (25 mm) thick.

SCHEDULE 16 - OUTDOOR, ABOVEGROUND PIPING INSULATION SCHEDULE:

PRODUCT DATA SHEET 1 - Refrigerant Suction and Hot-Gas Piping:

3.1 All Pipe Sizes: Insulation shall be the following:

A. Flexible Elastomeric: 1 inch (50 mm) thick.

SCHEDULE 17 - INDOOR, FIELD-APPLIED JACKET SCHEDULE

PRODUCT DATA SHEET 1 - Install jacket over insulation material. For insulation with factory-applied jacket, install the field-applied jacket over the factory-applied jacket.

PRODUCT DATA SHEET 2 - If more than one material is listed, selection from materials listed is Contractor's option.

PRODUCT DATA SHEET 3 - Piping, Concealed:

3.1 Factory applied ASJ-SSL.

PRODUCT DATA SHEET 4 - Piping, Exposed:

3.1 Factory applied ASJ-SSL.

SCHEDULE 18 - OUTDOOR PIPE INSULATION JACKET

PRODUCT DATA SHEET 1 - Cover all pipe insulation exposed to the weather with stainless steel jacket.

PRODUCT DATA SHEET 2 - Stainless steel jacket shall be 0.016" thick: longitudinal or circumference corrugations. Jacket shall have a factory-applied vapor barrier on the inside and shall be applied using 3/4" wide stainless steel straps over transverse joist maximum 18" on center. Corrugations shall match from one section of cover to the other. On vertical runs, the upper cover shall lap over the lower cover and the seams shall be toward walls, horizontal seams shall be on the bottom of the run. Fitting and valve jackets shall be factory fabricated from not less than 0.02" thick stainless steel sheet. Seal all jacket joints and seams watertight.

SCHEDULE 19 - PROTECTION AND REPLACEMENT

PRODUCT DATA SHEET 1 - Replace damaged insulation, which cannot be repaired satisfactorily, including units with vapor barrier damage and moisture saturation.

PRODUCT DATA SHEET 2 - Protection: The insulation installer shall advise the Contractor of the required protection for the insulation work during the remainder of the construction period, to avoid damage and deterioration.

PRODUCT DATA SHEET 3 - Any fiberglass insulation product which becomes wetted shall be removed from the job site and disposed of properly.

END OF SECTION 23 07 00

SECTION 23 09 16 – AUTOMATIC TEMPERATURE CONTROLS

PART 1 - GENERAL

SCHEDULE 1 - RELATED DOCUMENTS:

PRODUCT DATA SHEET 1 - Drawings and general provisions of Contract, including General and Supplementary conditions and Division-1 Specification sections, apply to work of this section.

SCHEDULE 2 - SUMMARY

PRODUCT DATA SHEET 1 - This Section includes control equipment for HVAC systems and components, including control components for terminal heating and cooling units not supplied with factory-wired controls.

SCHEDULE 3 - SCOPE

PRODUCT DATA SHEET 1 - Provide complete automatic control systems as indicated on the Drawings and as specified herein. The systems shall provide accurate and stable control using electric/electronic control devices for sensing and controlling major equipment.

PRODUCT DATA SHEET 2 - Include, but not limited to, the following major items:

1.1 All wiring and conduits for temperature and carbon dioxide (CO_2) levels controls.

1.2 Responsible for all electrical work associated with the control system.

A. Perform all wiring in accordance with all local and national codes.

B. Install all low voltage electrical control wiring. Color code all wiring, whether exposed or concealed. Run all wiring, whether exposed or concealed, in conduit in accordance with Division 26 - ELECTRICAL.

C. Shop drawings, equipment data and materials.

D. System start-up and Owner’s instructions.

1.3 Conform to all applicable requirements specified under Section 230502, BASIC HVAC REQUIREMENTS.

SCHEDULE 4 - SEQUENCE OF CONTROLS

PRODUCT DATA SHEET 1 - Refer to design drawings.

SCHEDULE 5 - SUBMITTALS

PRODUCT DATA SHEET 1 - Product Data: Include manufacturer's technical literature for each control device. Indicate dimensions, capacities, performance characteristics, electrical characteristics, finishes for materials, and installation and startup instructions for each type of product indicated.

1.1 System Hardware: Bill of materials of equipment indicating quantity, manufacturer, and model number. Include technical data for operator workstation equipment, interface equipment, control units, transducers/transmitters, sensors, actuators, valves, relays/switches, control panels, and operator interface equipment.

1.2 Control System Software: Include technical data for operating system software, operator interface, color graphics, and other third-party applications.

1.3 Controlled Systems: Instrumentation list with element name, type of device, manufacturer, model number, and product data. Include written description of sequence of operation including schematic diagram.

PRODUCT DATA SHEET 2 - Shop Drawings: Detail equipment assemblies and indicate dimensions, weights, loads, required clearances, method of field assembly, components, and location and size of each field connection.

1.1 Bill of materials of equipment indicating quantity, manufacturer, and model number.

1.2 Schematic flow diagrams showing fans, pumps, coils, dampers, valves, and control devices.

1.3 Wiring Diagrams: Power, signal, and control wiring.

1.4 Details of control panel faces, including controls, instruments, and labeling.

SCHEDULE 6 - DELIVERY, STORAGE, AND HANDLING

PRODUCT DATA SHEET 1 - Factory-Mounted Components: Where control devices specified in this Section are indicated to be factory mounted on equipment, arrange for shipping of control devices to equipment manufacturer.

SCHEDULE 7 - COORDINATION

PRODUCT DATA SHEET 1 - Provide all wiring, conduit for low voltage wiring, and devices for the control systems. Extend power wiring for control devices from a power source provided under Division 26.

PRODUCT DATA SHEET 2 - Conform to Division 26 for electrical requirements for materials, equipment and interfacing.

PRODUCT DATA SHEET 3 - Division 26 will provide power wiring to starters and wiring and connections to motors.

PRODUCT DATA SHEET 4 - Provide all field control wiring for major equipment including but not limited to rooftop packaged air conditioning units, split heat pump system, exhaust fans, and associated equipment. Coordinate with equipment manufacturers for specific requirements.

PRODUCT DATA SHEET 5 - Provide time delay for rooftop packaged air conditioning units to start sequentially after power failure. Coordinate with Division 26, ELECTRICAL.

SCHEDULE 8 - COMPLETION

PRODUCT DATA SHEET 1 - System Start-Up: Upon completion of the installation, start up the system and perform all necessary testing and calibration of each component in the entire system. Perform an acceptance test in the presence of the Owner's Representative. When the system performance is deemed satisfactory in whole or in part by the Owner's Representative, the part(s) of the system will be accepted.

PRODUCT DATA SHEET 2 - Owner's Instructions: At the completion of the work, factory representatives under direct employment of the Contractor shall provide minimum one 4-hour training course to the Owner's operating personnel who have responsibility for the operation of the systems. As a minimum, the course shall include system overview, operation of the system, function of each component, system operating procedure, programming and maintenance procedures.

SCHEDULE 9 - GUARANTEE

PRODUCT DATA SHEET 1 - Equipment materials and workmanship shall be guaranteed for a period of one year from date of final system acceptance.

PRODUCT DATA SHEET 2 - Any defects due to faulty materials, methods of installation, or workmanship within this period shall be repaired or replaced promptly upon notice by the Owner and at on expense to the Owner.

SCHEDULE 10 - DESCRIPTION OF WORK:

PRODUCT DATA SHEET 1 - Provide all work for the complete installation of automatic temperature controls.

1.1 Work in this Section: Principal items include:

A. Electronic and electric controls, includes sensors, switches, relays, control panels for instruments.

B. Adjustment and validation of control system. Instruction of Owner's representative on maintenance and operation of control equipment.

C. Electric diagrams showing interlocks between equipment furnished under the other sections and control furnished herein.

D. Wiring and Conduit: Low and line voltage for the control system under Division 23, Power Wiring under Division 26.

PRODUCT DATA SHEET 2 - The Temperature Control System shall consist of all sensors, actuators, thermostat, controllers, electrical low voltage (24 VAC) and line voltage control wiring for a complete and operating installation as specified herein. The system shall be a standard product with the manufacturer who will guarantee ongoing parts availability and factory trained field support for five (5) years after system acceptance.

SCHEDULE 11 - RELATED SECTIONS:

PRODUCT DATA SHEET 1 - Refer to Division 9 for patching and painting required for the control system installation. Not work of this section.

PRODUCT DATA SHEET 2 - Automatic dampers in ductwork, casings, etc. furnished by this section shall be installed by the Mechanical Division under control people's supervision. The dampers shall be correctly installed so that they operate freely and close tightly. Provide and install blank off plates when the control application requires dampers smaller than duct size.

PRODUCT DATA SHEET 3 - Refer to Division 26 sections for the following work; not work of this section:

1.1 Power supply wiring for power source to power connection on controls and/or unit control panels, including starters, disconnects, and required electrical devices, except where specified as furnished, or factory-installed, by manufacturer.

SCHEDULE 12 - QUALITY ASSURANCE:

PRODUCT DATA SHEET 1 - Codes and Standards:

1.1 General: The publications listed below form a part of this specification to the extent applicable

A. NEMA - Enclosures for Electrical Equipment (1000 volts maximum)

B. NFPA 70 - National Electrical Code

C. NFPA 90A - Air Conditioning and Ventilation Systems

SCHEDULE 13 - MANUFACTURERS:

PRODUCT DATA SHEET 1 - York International Corp. Controls.

PRODUCT DATA SHEET 2 - Johnson Controls.

PRODUCT DATA SHEET 3 - Carrier Controls.

PRODUCT DATA SHEET 4 - Trane Controls

SCHEDULE 14 - WARRANTY:

PRODUCT DATA SHEET 1 - Provide all labor, material and equipment necessary to maintain beneficial performance of the entire system for a period of one (1) year after acceptance of the system, or parts thereof, by an authorized representative of the Owner. Any defects in workmanship or material during the warranty period shall be promptly corrected by the Contractor at no charge to the Owner.

PART 2 - PRODUCTS

SCHEDULE 1 - GENERAL

PRODUCT DATA SHEET 1 - Materials and equipment shall be the catalogued products of manufacturers regularly engaged in production and installation of automatic temperature control system and shall be manufacturer’s latest standard design.

PRODUCT DATA SHEET 2 - Electronic equipment shall conform to the requirements of FCC Regulation, Part 15, Section 15, GOVERNING RADIO FREQUENCY ELECTROMAGNETIC INTERFERENCE and labeled.

2.1 Comply with UL 916 PAZX and 864 UDTZ and listed.

SCHEDULE 2 - FIELD DEVICES

PRODUCT DATA SHEET 1 - Range for devices shall be selected for application.

PRODUCT DATA SHEET 2 - Where required by local code, actuators shall meet the requirements of UL 555S.

PRODUCT DATA SHEET 3 - Programmable thermostats: Programmable thermostats shall be furnished by the packaged air conditioning unit and split air conditioning system manufacturers.

PRODUCT DATA SHEET 4 - Line voltage thermostats: Shall have liquid temperature sensing element and high efficiency diaphragm and leverage. 40º to 90ºF range, 120 volt, metal cover bimetal thermometer.

PRODUCT DATA SHEET 5 - Programmable time clocks: Each control channel shall be individually programmable.

SCHEDULE 3 - WIRING

PRODUCT DATA SHEET 1 - Control circuit conductors which run in the same conduit as power circuit conductors shall have the same insulation level as power circuit conductors. Circuits operating at more than 100 volts shall in accordance with Division 26. Circuits operating at less than 100 volts shall be defined as low voltage and shall be run in rigid or flexible conduit, metallic tubing, metal raceways or wire trays, armored cable, or multi-conductor cable. Use multi-conductor cable for concealed accessible locations only. Provide circuit and wiring protection as required by NFPA 70. Aluminum sheathed cable or aluminum conduit may be used but shall not be buried in concrete. Wiring in HVAC plenums shall be in conduit. Protect exposed wiring form abuse and damage.

PRODUCT DATA SHEET 2 - AC control wiring: Control wiring for 24V circuits shall be insulated copper 18 AWG minimum and shall be rated for 300 VAC service.

PRODUCT DATA SHEET 3 - Analog signal wiring for analog outputs shall be 19-8 AWG single or multiple twisted pair. Each cable shall be 100% shielded, and have 20 AWG drain sire. Exception is direct connect RTD wiring which shall be a single 18 AWG minimum twisted pair, 100% shielded, and have 20 AWG drain wire. Each wire shall have insulation rated to 300 VAC. Cables shall have an overall aluminum polyester or tinned copper, (cable shield type), overall 20 AWG tinned copper cable drain wire, and overall cable insulation rated 300 VAC. Install analog signal wiring in conduit separate from AC power circuits.

PART 3 - EXECUTION

SCHEDULE 1 - ADJUSTMENT AND CLEANING

PRODUCT DATA SHEET 1 - After completion of the installation, regulate and adjust all temperature sensors, motors, and other equipment, and place them in complete operating condition.

Testing and adjusting of temperature control systems shall be verified with all testing, balancing, and adjusting specified.

SCHEDULE 2 - INSTALLATION

PRODUCT DATA SHEET 1 - General: Install systems and materials in accordance with manufacturer's printed instructions and rough-in drawings, and details on Drawings. Install electrical components and use electrical products complying with requirements of applicable Division 26 sections of the Specifications. Mount controllers at convenient locations and heights.

PRODUCT DATA SHEET 2 - Install control wiring without splices between terminal points, color-coded. Install in neat workmanlike manner, securely fastened. Install in accordance with National Electrical Code.

PRODUCT DATA SHEET 3 - Conduit shall be installed parallel to or at right angles to the building structure and shall be concealed in all finished spaces.

PRODUCT DATA SHEET 4 - Provide permanent labels for all panels and devices. Refer to Section Identification for HVAC Piping and Equipment.

PRODUCT DATA SHEET 5 - Provide identification inside core of each space thermostat or temperature sensor indicating the HVAC unit and/or air terminal unit which it serves.

SCHEDULE 3 - FIELD QUALITY CONTROL

PRODUCT DATA SHEET 1 - Perform the following field tests and inspections and prepare test reports:

3.1 Operational Test: After electrical circuitry has been energized, start units to confirm proper unit operation. Remove and replace malfunctioning units and retest.

3.2 Test and adjust controls and safeties.

3.3 Test calibration of electronic controllers by disconnecting input sensors and stimulating operation with compatible signal generator.

3.4 Test each point through its full operating range to verify that safety and operating control set points are as required.

3.5 Test each system for compliance with sequence of operation.

3.6 Test software and hardware interlocks.

SCHEDULE 4 - ADJUSTING

PRODUCT DATA SHEET 1 - Calibrating and Adjusting:

3.1 Calibrate instruments.

A. Make three-point calibration test for both linearity and accuracy for each analog instrument.

B. Calibrate equipment and procedures using manufacturer's written recommendations and instruction manuals. Use test equipment with accuracy at least double that of instrument being calibrated.

3.2 Temperature:

A. Calibrate resistance temperature transmitters at 0, 50, and 100 percent of span using a precision-resistance source.

B. Calibrate temperature switches to make or break contacts.

3.3 Stroke and adjust control valves and dampers with positioners, following manufacturer's recommended procedure, so that valve and damper is 0, 50, and 100 percent closed.

3.4 Adjust initial temperature and humidity set points.

SCHEDULE 5 - DEMONSTRATION

PRODUCT DATA SHEET 1 - Engage a factory-authorized service representative to train Owner's maintenance personnel to adjust, operate, and maintain HVAC instrumentation and controls. Refer to Division 01 Section "Demonstration and Training."

END OF SECTION 23 09 16

SECTION 23 31 13 - METAL DUCTS

PART 1 - GENERAL

SCHEDULE 1 - RELATED DOCUMENTS:

PRODUCT DATA SHEET 1 -Drawings and general provisions of the Contract, including General and Supplementary Conditions and Division 1 Specification Sections, apply to this Section.

SCHEDULE 2 - SUMMARY:

PRODUCT DATA SHEET 1 -This Section includes metal ducts for supply, return, outside, and exhaust air-distribution systems in pressure classes from minus 2- to plus 10-inch wg (minus 500 to plus 2500 Pa). Metal ducts include the following:

1.1 Rectangular ducts and fittings.

1.2 Single-wall, round spiral-seam ducts and formed fittings.

1.3 Duct liner.

PRODUCT DATA SHEET 2 - Related Sections include the following:

1.1 Division 23 Section "Duct Accessories" for dampers, duct-mounting access doors and panels and turning vanes.

SCHEDULE 3 - DEFINITIONS:

PRODUCT DATA SHEET 0 - FRP: Fiberglass-reinforced plastic.

PRODUCT DATA SHEET 1 - NUSIG: National Uniform Seismic Installation Guidelines.

SCHEDULE 4 - SYSTEM DESCRIPTION:

PRODUCT DATA SHEET 0 - Duct system design, as indicated, has been used to select size and type of air-moving and -distribution equipment and other air system components. Changes to layout or configuration of duct system must be specifically approved in writing by Architect. Accompany requests for layout modifications with calculations showing that proposed layout will provide original design results without increasing system total pressure.

SCHEDULE 5 - SUBMITTALS:

PRODUCT DATA SHEET 0 - Shop Drawings: CAD-generated and drawn to 1/8 inch equals 1 foot (1:100) scale fully dimensioned layout of ductwork and fittings indicating duct sizes, locations, elevations, duct joint locations, slopes of horizontal runs, and connections. Show interface and spatial relationship between ductwork and proximate equipment. The plans shall be coordinated with the plumbing, fire protection, electrical and ceiling contractors prior to start of work. Fabrication and installation of ductwork prior to coordination with the other trades is done entirely at the risk of the Contractor. The HVAC Contractor shall be responsible for the coordination with other trades and no allowances will be made for any conflicts resulting from coordination.

1.1 Construction detail for low and medium pressure ductwork and fittings clearly indicating dimensional data, material gauges, types and size of reinforcement seams, and connection details.

PRODUCT DATA SHEET 1 - Welding certificates.

PRODUCT DATA SHEET 2 - Field quality-control test reports.

SCHEDULE 6 - QUALITY ASSURANCE:

PRODUCT DATA SHEET 1 -Manufacturers qualifications: Manufacturers are limited to those with a minimum of 5-years manufacturing experience and who are dedicated to producing high quality, uniform, air tight products that are in strict accordance with all current SMACNA standards for Metal ductwork. Manufacturers qualifications: Manufacturers are limited to those with a minimum of 5-years manufacturing experience and who are dedicated to producing high quality, uniform, air tight products that are in strict accordance with all current SMACNA standards for Metal ductwork.

PART 2 - PRODUCTS

SCHEDULE 1 - MANUFACTURERS:

PRODUCT DATA SHEET 1 - In other Part 2 articles where titles below introduce lists, the following requirements apply to product selection:

2.1 Manufacturers: Subject to compliance with requirements, provide products by one of the manufacturers specified.

SCHEDULE 2 - SHEET METAL MATERIALS:

PRODUCT DATA SHEET 1 - Comply with SMACNA's "HVAC Duct Construction Standards--Metal and Flexible" for acceptable materials, material thicknesses, and duct construction methods, unless otherwise indicated. Sheet metal materials shall be free of pitting, seam marks, roller marks, stains, discolorations, and other imperfections.

PRODUCT DATA SHEET 2 - All ducts shall be stainless steel type 304. Stainless steel duct shall be fabricated from lock form grade, Type 304, ASTM-A167, No. 4 general purpose finish. Protect finish with mill applied protective plastic/paper throughout construction.

PRODUCT DATA SHEET 3 - Reinforcement Shapes and Plates: Aluminum reinforcement where installed on aluminum sheet metal ducts.

PRODUCT DATA SHEET 4 - Tie Rods: Galvanized steel, 1/4-inch (6-mm) minimum diameter for lengths 36 inches (900 mm) or less; 3/8-inch (10-mm) minimum diameter for lengths longer than 36 inches (900 mm).

SCHEDULE 3 - SEALANT MATERIALS:

PRODUCT DATA SHEET 1 - Joint and Seam Sealants, General: The term "sealant" is not limited to materials of adhesive or mastic nature but includes tapes and combinations of open-weave fabric strips and mastics.

PRODUCT DATA SHEET 2 - Joint and Seam Tape: 2 inches (50 mm) wide; glass-fiber-reinforced fabric.

PRODUCT DATA SHEET 3 - Tape Sealing System: Woven-fiber tape impregnated with gypsum mineral compound and modified acrylic/silicone activator to react exothermically with tape to form hard, durable, airtight seal.

PRODUCT DATA SHEET 4 - Water-Based Joint and Seam Sealant: Flexible, adhesive sealant, resistant to UV light when cured, UL 723 listed, and complying with NFPA requirements for Class 1 ducts.

PRODUCT DATA SHEET 5 - Solvent-Based Joint and Seam Sealant: One-part, non-sag, solvent-release-curing, polymerized butyl sealant formulated with a minimum of 75 percent solids.

PRODUCT DATA SHEET 6 - Flanged Joint Mastic: One-part, acid-curing, silicone, elastomeric joint sealant complying with ASTM C 920, Type S, Grade NS, Class 25, Use O.

PRODUCT DATA SHEET 7 - Flange Gaskets: Butyl rubber or EPDM polymer with polyisobutylene plasticizer.

SCHEDULE 4 - HANGERS AND SUPPORTS:

PRODUCT DATA SHEET 1 - Hanger Materials: Galvanized sheet steel or threaded steel rod.

2.1 Hangers Installed in Corrosive Atmospheres: Electro-galvanized, all-thread rods or galvanized rods with threads painted with zinc-chromate primer after installation.

2.2 Strap and Rod Sizes: Comply with SMACNA's "HVAC Duct Construction Standards--Metal and Flexible" for steel sheet width and thickness and for steel rod diameters.

2.3 Galvanized-steel straps attached to aluminum ducts shall have contact surfaces painted with zinc-chromate primer.

PRODUCT DATA SHEET 2 - Duct Attachments: Sheet metal screws, blind rivets, or self-tapping metal screws; compatible with duct materials.

PRODUCT DATA SHEET 3 - Trapeze and Riser Supports: Steel shapes complying with ASTM A 36/A 36M.

2.1 Supports for Aluminum Ducts: Aluminum support materials unless materials are electrolytically separated from ducts.

SCHEDULE 5 - RECTANGULAR DUCT FABRICATION:

PRODUCT DATA SHEET 1 - Fabricate ducts, elbows, transitions, offsets, branch connections, and other construction according to SMACNA's "HVAC Duct Construction Standards--Metal and Flexible" and complying with requirements for metal thickness, reinforcing types and intervals, tie-rod applications, and joint types and intervals.

2.1 Lengths: Fabricate rectangular ducts in lengths appropriate to reinforcement and rigidity class required for pressure class.

2.2 Deflection: Duct systems shall not exceed deflection limits according to SMACNA's "HVAC Duct Construction Standards--Metal and Flexible."

PRODUCT DATA SHEET 2 - Transverse Joints: Prefabricated slide-on joints and components constructed using manufacturer's guidelines for material thickness, reinforcement size and spacing, and joint reinforcement.

2.1 Manufacturers:

A. Ductmate Industries, Inc.

B. Nexus Inc.

C. Ward Industries, Inc.

PRODUCT DATA SHEET 3 - Formed-On Flanges: Construct according to SMACNA's "HVAC Duct Construction Standards--Metal and Flexible," Figure 1-4, using corner, bolt, cleat, and gasket details.

2.1 Manufacturers:

A. Ductmate Industries, Inc.

B. Lockformer.

2.2 Duct Size: Maximum 30 inches (750 mm) wide and up to 2-inch wg (500-Pa) pressure class.

2.3 Longitudinal Seams: Pittsburgh lock sealed with non-curing polymer sealant.

PRODUCT DATA SHEET 4 - Cross Breaking or Cross Beading: Cross break or cross bead duct sides 19 inches (480 mm) and larger and 0.0359 inch (0.9 mm) thick or less, with more than 10 sq. ft. (0.93 sq. m) of non-braced panel area unless ducts are lined.

SCHEDULE 6 - ROUND DUCT AND FITTING FABRICATION:

PRODUCT DATA SHEET 1 - Diameter as applied to flat-oval ducts in this Article is the diameter of a round duct with a circumference equal to the perimeter of a given size of flat-oval duct.

PRODUCT DATA SHEET 2 - Round, Spiral Lock-Seam Ducts: Fabricate supply ducts of galvanized steel according to SMACNA's "HVAC Duct Construction Standards--Metal and Flexible."

PRODUCT DATA SHEET 3 - Duct Joints:

2.1 Ducts up to 24 Inches in Diameter: Interior, 5 inch center-beaded slip coupling, sealed before and after fastening, attached with sheet metal screws.

A. Manufacturers:

1. Ductmate Industries, Inc.

2. Lindab Inc.

PRODUCT DATA SHEET 4 - 90-Degree Tees and Laterals and Conical Tees: Fabricate to comply with SMACNA's "HVAC Duct Construction Standards--Metal and Flexible," with metal thicknesses specified for longitudinal-seam straight ducts.

PRODUCT DATA SHEET 5 - Diverging-Flow Fittings: Fabricate with reduced entrance to branch taps and with no excess material projecting from fitting onto branch tap entrance.

PRODUCT DATA SHEET 6 - Bend radius of elbows shall be 1-1/2 times duct diameter.

PART 3 - EXECUTION

SCHEDULE 1 - DUCT APPLICATIONS:

PRODUCT DATA SHEET 1 - Static-Pressure Classes: Unless otherwise indicated, construct ducts according to the following:

3.1 Supply Ducts: 2-inch wg (500 Pa).

3.2 Return Ducts (Negative Pressure): 1-inch wg (250 Pa).

3.3 Exhaust Ducts (Negative Pressure): 1-inch wg (250 Pa).

PRODUCT DATA SHEET 2 - All ducts shall be stainless steel.

SCHEDULE 2 - DUCT INSTALLATION:

PRODUCT DATA SHEET 1 - Exposed Duct: All round duct should be handled and installed as for exposed to view.

PRODUCT DATA SHEET 2 - Protect ductwork and fittings in such a manner as to avoid dents, scratches, and visual impairments.

PRODUCT DATA SHEET 3 - Construct and install ducts according to SMACNA's "HVAC Duct Construction Standards--Metal and Flexible," unless otherwise indicated.

PRODUCT DATA SHEET 4 - Install round ducts in lengths not less than 12 feet (3.7 m) unless interrupted by fittings.

PRODUCT DATA SHEET 5 - Install ducts with fewest possible joints.

PRODUCT DATA SHEET 6 - Install fabricated fittings for changes in directions, size, and shape and for connections.

PRODUCT DATA SHEET 7 - Install couplings tight to duct wall surface with a minimum of projections into duct. Secure couplings with sheet metal screws. Install screws at intervals of 12 inches (300 mm), with a minimum of 3 screws in each coupling.

PRODUCT DATA SHEET 8 - Install ducts, unless otherwise indicated, vertically and horizontally and parallel and perpendicular to building lines; avoid diagonal runs.

PRODUCT DATA SHEET 9 - Install ducts close to walls, overhead construction, columns, and other structural and permanent enclosure elements of building.

PRODUCT DATA SHEET 10 - Install ducts with a clearance of 1 inch (25 mm), plus allowance for insulation thickness.

PRODUCT DATA SHEET 11 - Conceal ducts from view in finished spaces. Do not encase horizontal runs in solid partitions unless specifically indicated.

PRODUCT DATA SHEET 12 - Coordinate layout with lighting layouts, and similar finished work.

PRODUCT DATA SHEET 13 - Seal all joints and seams. Apply sealant to male end connectors before insertion, and afterward to cover entire joint and sheet metal screws.

PRODUCT DATA SHEET 14 - Electrical Equipment Spaces: Route ducts to avoid passing through transformer vaults and electrical equipment spaces and enclosures.

PRODUCT DATA SHEET 15 - Non-Fire-Rated Partition Penetrations: Where ducts pass through interior partitions and exterior walls and are exposed to view, conceal spaces between construction openings and ducts or duct insulation with sheet metal flanges of same metal thickness as ducts. Overlap openings on 4 sides by at least 1-1/2 inches (38 mm).

PRODUCT DATA SHEET 16 - Install ducts with hangers and braces designed to withstand, without damage to equipment, seismic force required by applicable building codes. Refer to SMACNA's "Seismic Restraint Manual: Guidelines for Mechanical Systems."

PRODUCT DATA SHEET 17 - Protect duct interiors from the elements and foreign materials until building is enclosed.

PRODUCT DATA SHEET 18 - Paint interiors of metal ducts, that do not have duct liner, for 24 inches (600 mm) upstream of registers and grilles. Apply one coat of flat, black, latex finish coat over a compatible primer. Paint materials and application requirements are specified in Division 9 painting Sections.

SCHEDULE 3 - SEAM AND JOINT SEALING:

PRODUCT DATA SHEET 1 - Seal duct seams and joints according to SMACNA's "HVAC Duct Construction Standards--Metal and Flexible" for duct pressure class indicated.

3.1 For pressure classes lower than 2-inch wg (500 Pa), seal transverse joints.

PRODUCT DATA SHEET 2 - Seal ducts before external insulation is applied.

SCHEDULE 4 - HANGING AND SUPPORTING:

PRODUCT DATA SHEET 1 - Support horizontal ducts within 24 inches (600 mm) of each elbow and within 48 inches (1200 mm) of each branch intersection.

PRODUCT DATA SHEET 2 - Install upper attachments to structures with an allowable load not exceeding one-fourth of failure (proof-test) load.

SCHEDULE 5 - CONNECTIONS:

PRODUCT DATA SHEET 1 - Make connections to equipment with flexible connectors according to Division 23 Section "Duct Accessories."

PRODUCT DATA SHEET 2 - Comply with SMACNA's "HVAC Duct Construction Standards--Metal and Flexible" for branch, outlet and inlet, and terminal unit connections.

SCHEDULE 6 - CLEANING NEW SYSTEMS:

PRODUCT DATA SHEET 1 - Mark position of dampers and air-directional mechanical devices before cleaning, and perform cleaning before air balancing.

PRODUCT DATA SHEET 2 - Use service openings, as required, for physical and mechanical entry and for inspection.

3.1 Create other openings to comply with duct standards.

3.2 Remove and reinstall ceiling sections to gain access during the cleaning process.

PRODUCT DATA SHEET 3 - Vent vacuuming system to the outside. Include filtration to contain debris removed from HVAC systems, and locate exhaust down wind and away from air intakes and other points of entry into building.

PRODUCT DATA SHEET 4 - Clean the following metal duct systems by removing surface contaminants and deposits:

3.1 Air outlets and inlets (registers, grilles, and diffusers).

3.2 Supply, return, and exhaust fans including fan housings, plenums (except ceiling supply and return plenums), scrolls, blades or vanes, shafts, baffles, dampers, and drive assemblies.

3.3 Air-handling unit internal surfaces and components including mixing box, coil section, air wash systems, spray eliminators, condensate drain pans, humidifiers and dehumidifiers, filters and filter sections, and condensate collectors and drains.

3.4 Coils and related components.

3.5 Return-air ducts, dampers, and actuators except in ceiling plenums and mechanical equipment rooms.

3.6 Supply-air ducts, dampers, actuators, and turning vanes.

PRODUCT DATA SHEET 5 - Mechanical Cleaning Methodology:

3.1 Clean metal duct systems using mechanical cleaning methods that extract contaminants from within duct systems and remove contaminants from building.

3.2 Use vacuum-collection devices that are operated continuously during cleaning. Connect vacuum device to downstream end of duct sections so areas being cleaned are under negative pressure.

3.3 Use mechanical agitation to dislodge debris adhered to interior duct surfaces without damaging integrity of metal ducts, duct liner, or duct accessories.

3.4 Clean fibrous-glass duct liner with HEPA vacuuming equipment; do not permit duct liner to get wet.

3.5 Clean coils and coil drain pans according to NADCA 1992. Keep drain pan operational. Rinse coils with clean water to remove latent residues and cleaning materials; comb and straighten fins.

PRODUCT DATA SHEET 6 - Cleanliness Verification:

3.1 Visually inspect metal ducts for contaminants.

3.2 Where contaminants are discovered, re-clean and re-inspect ducts.

END OF SECTION 23 31 13

SECTION 23 33 00 - DUCT ACCESSORIES

PART 1 - GENERAL

SCHEDULE 1 - RELATED DOCUMENTS:

PRODUCT DATA SHEET 1 - Drawings and general provisions of the Contract, including General and Supplementary Conditions and Division 1 Specification Sections, apply to this Section.

SCHEDULE 2 - SUMMARY:

PRODUCT DATA SHEET 1 - This Section includes the following:

1.1 Backdraft dampers.

1.2 Volume dampers.

1.3 Turning vanes.

1.4 Duct-mounting access doors.

1.5 Flexible connectors.

1.6 Duct accessory hardware.

PRODUCT DATA SHEET 2 - Related Sections include the following:

1.1 Division 23 Section "Automatic Temperature Controls" for electric and pneumatic damper actuators.

SCHEDULE 3 - SUBMITTALS:

PRODUCT DATA SHEET 1 - Product Data: For the following:

1.1 Backdraft dampers.

1.2 Volume dampers.

1.3 Turning vanes.

1.4 Duct-mounting access doors.

1.5 Flexible connectors.

SCHEDULE 4 - QUALITY ASSURANCE:

PRODUCT DATA SHEET 1 - Comply with NFPA 90A, "Installation of Air Conditioning and Ventilating Systems," and NFPA 90B, "Installation of Warm Air Heating and Air Conditioning Systems."

PART 2 - PRODUCTS

SCHEDULE 1 - MANUFACTURERS:

PRODUCT DATA SHEET 1 - In other Part 2 articles where titles below introduce lists, the following requirements apply to product selection:

2.1 Manufacturers: Subject to compliance with requirements, provide products by one of the manufacturers specified.

SCHEDULE 2 - SHEET METAL MATERIALS:

PRODUCT DATA SHEET 1 - Comply with SMACNA's "HVAC Duct Construction Standards--Metal and Flexible" for acceptable materials, material thicknesses, and duct construction methods, unless otherwise indicated.

PRODUCT DATA SHEET 2 - Galvanized Sheet Steel: Lock-forming quality; complying with ASTM A 653/A 653M and having G90 (Z275) coating designation; ducts shall have mill-phosphatized finish for surfaces exposed to view.

PRODUCT DATA SHEET 3 - Stainless Steel: ASTM A 480/A 480M.

PRODUCT DATA SHEET 4 - Extruded Aluminum: ASTM B 221 (ASTM B 221M), alloy 6063, temper T6.

PRODUCT DATA SHEET 5 - Reinforcement Shapes and Plates: Galvanized-steel reinforcement where installed on galvanized sheet metal ducts; compatible materials for aluminum and stainless-steel ducts.

PRODUCT DATA SHEET 6 - Tie Rods: Galvanized steel, 1/4-inch (6-mm) minimum diameter for lengths 36 inches (900 mm) or less; 3/8-inch (10-mm) minimum diameter for lengths longer than 36 inches (900 mm).

SCHEDULE 3 - BACKDRAFT DAMPERS:

PRODUCT DATA SHEET 1 - Manufacturers:

2.1 Air Balance, Inc.

2.2 Duro Dyne Corp.

2.3 Greenheck.

2.4 Penn Ventilation Company, Inc.

2.5 Ruskin Company.

2.6 Vent Products Company, Inc.

PRODUCT DATA SHEET 2 - Description: Multiple-blade, parallel action gravity balanced, with center-pivoted blades of maximum 6-inch (150-mm) width, with sealed edges, assembled in

rattle-free manner with 90-degree stop, steel ball bearings, and axles; adjustment device to permit setting for varying differential static pressure.

PRODUCT DATA SHEET 3 - Frame: 0.052-inch- (1.3-mm-) thick, galvanized sheet steel, with welded corners and mounting flange.

PRODUCT DATA SHEET 4 - Blades: 0.025-inch- (0.6-mm-) thick, roll-formed aluminum.

PRODUCT DATA SHEET 5 - Blade Seals: Vinyl.

PRODUCT DATA SHEET 6 - Blade Axles: Nonferrous.

PRODUCT DATA SHEET 7 - Tie Bars and Brackets: Aluminum.

PRODUCT DATA SHEET 8 - Return Spring: Adjustable tension.

SCHEDULE 4 - VOLUME DAMPERS:

PRODUCT DATA SHEET 1 - Manufacturers:

2.1 Air Balance, Inc.

2.2 Ruskin Company.

2.3 Vent Products Company, Inc.

PRODUCT DATA SHEET 2 - General Description: Factory fabricated, with required hardware and accessories. Stiffen damper blades for stability. Include locking device to hold single-blade dampers in a fixed position without vibration. Close duct penetrations for damper components to seal duct consistent with pressure class.

2.1 Pressure Classes of 3-Inch wg (750 Pa) or Higher: End bearings or other seals for ducts with axles full length of damper blades and bearings at both ends of operating shaft.

PRODUCT DATA SHEET 3 - Low-Leakage Volume Dampers: Multiple- or single-blade, parallel- or opposed-blade design as indicated, low-leakage rating, and suitable for horizontal or vertical applications.

2.1 Steel Frames: Hat-shaped, galvanized sheet steel channels, minimum of 0.064 inch (1.62 mm) thick, with mitered and welded corners; frames with flanges where indicated for attaching to walls and flangeless frames where indicated for installing in ducts.

2.2 Roll-Formed Steel Blades: 0.064-inch- (1.62-mm-) thick, galvanized sheet steel.

2.3 Aluminum Frames: Hat-shaped, 0.10-inch- (2.5-mm-) thick, aluminum sheet channels; frames with flanges where indicated for attaching to walls and flangeless frames where indicated for installing in ducts.

2.4 Roll-Formed Aluminum Blades: 0.10-inch- (2.5-mm-) thick aluminum sheet.

2.5 Extruded-Aluminum Blades: 0.050-inch- (1.2-mm-) thick extruded aluminum.

2.6 Blade Axles: Galvanized steel.

2.7 Bearings: Oil-impregnated bronze thrust or ball.

2.8 Blade Seals: Vinyl.

2.9 Jamb Seals: Cambered stainless steel.

2.10 Tie Bars and Brackets: Galvanized steel.

PRODUCT DATA SHEET 4 - Jackshaft: 1-inch- (25-mm-) diameter, galvanized-steel pipe rotating within pipe-bearing assembly mounted on supports at each mullion and at each end of multiple-damper assemblies.

2.1 Length and Number of Mountings: Appropriate to connect linkage of each damper in multiple-damper assembly.

PRODUCT DATA SHEET 5 - Damper Hardware: Zinc-plated, die-cast core with dial and handle made of 3/32-inch- (2.4-mm-) thick zinc-plated steel, and a 3/4-inch (19-mm) hexagon locking nut. Include center hole to suit damper operating-rod size. Include elevated platform for insulated duct mounting.

SCHEDULE 5 - TURNING VANES:

PRODUCT DATA SHEET 1 - Fabricate to comply with SMACNA's "HVAC Duct Construction Standards--Metal and Flexible" for vanes and vane runners. Vane runners shall automatically align vanes.

PRODUCT DATA SHEET 2 - Manufactured Turning Vanes: Fabricate 1-1/2-inch- (38-mm-) wide, double-vane, curved blades of galvanized sheet steel set 3/4 inch (19 mm) o.c.; support with bars perpendicular to blades set 2 inches (50 mm) o.c.; and set into vane runners suitable for duct mounting.

2.1 Manufacturers:

A. Ductmate Industries, Inc.

B. Duro Dyne Corp.

C. METALAIRE, Inc.

SCHEDULE 6 - DUCT-MOUNTING ACCESS DOORS:

PRODUCT DATA SHEET 1 - General Description: Fabricate doors airtight and suitable for duct pressure class.

PRODUCT DATA SHEET 2 - Door: Double wall, duct mounting, and rectangular; fabricated of galvanized sheet metal with insulation fill and thickness as indicated for duct pressure class. Include vision panel where indicated. Include 1-by-1-inch (25-by-25-mm) butt or piano hinge and cam latches.

2.1 Manufacturers:

A. Ductmate Industries, Inc.

B. Greenheck.

C. Ventfabrics, Inc.

2.2 Frame: Galvanized sheet steel, with bend-over tabs and foam gaskets.

2.3 Provide number of hinges and locks as follows:

A. Less Than 12 Inches (300 mm) Square: Secure with two sash locks.

B. Up to 18 Inches (450 mm) Square: Two hinges and two sash locks.

C. Up to 24 by 48 Inches (600 by 1200 mm): Three hinges and two compression latches with outside and inside handles.

D. Sizes 24 by 48 Inches (600 by 1200 mm) and Larger: One additional hinge.

PRODUCT DATA SHEET 3 - Seal around frame attachment to duct and door to frame with neoprene or foam rubber.

PRODUCT DATA SHEET 4 - Insulation: 1-inch- (25-mm-) thick, fibrous-glass or polystyrene-foam board.

SCHEDULE 7 - FLEXIBLE CONNECTORS:

PRODUCT DATA SHEET 1 - Manufacturers:

2.1 Ductmate Industries, Inc.

2.2 Duro Dyne Corp.

2.3 Ventfabrics, Inc.

PRODUCT DATA SHEET 2 - General Description: Flame-retardant or noncombustible fabrics, coatings, and adhesives complying with UL 181, Class 1.

PRODUCT DATA SHEET 3 - Metal-Edged Connectors: Factory fabricated with a fabric strip 5-3/4 inches (146 mm) wide attached to two strips of 2-3/4-inch- (70-mm-) wide, 0.028-inch- (0.7-mm-) thick, galvanized sheet steel or 0.032-inch- (0.8-mm-) thick aluminum sheets. Select metal compatible with ducts.

PRODUCT DATA SHEET 4 - Indoor System, Flexible Connector Fabric: Glass fabric double coated with neoprene.

2.1 Minimum Weight: 26 oz./sq. yd. (880 g/sq. m).

2.2 Tensile Strength: 480 lbf/inch (84 N/mm) in the warp and 360 lbf/inch (63 N/mm) in the filling.

2.3 Service Temperature: Minus 40 to plus 200 deg F (Minus 40 to plus 93 deg C).

PRODUCT DATA SHEET 5 - Outdoor System, Flexible Connector Fabric: Glass fabric double coated with weatherproof, synthetic rubber resistant to UV rays and ozone.

2.1 Minimum Weight: 24 oz./sq. yd. (810 g/sq. m).

2.2 Tensile Strength: 530 lbf/inch (93 N/mm) in the warp and 440 lbf/inch (77 N/mm) in the filling.

2.3 Service Temperature: Minus 50 to plus 250 deg F (Minus 45 to plus 121 deg C).

SCHEDULE 8 - DUCT ACCESSORY HARDWARE:

PRODUCT DATA SHEET 1 - Instrument Test Holes: Cast iron or cast aluminum to suit duct material, including screw cap and gasket. Size to allow insertion of pitot tube and other testing instruments and of length to suit duct insulation thickness.

PRODUCT DATA SHEET 2 - Adhesives: High strength, quick setting, neoprene based, waterproof, and resistant to gasoline and grease.

PART 3 - EXECUTION

SCHEDULE 1 - APPLICATION AND INSTALLATION:

PRODUCT DATA SHEET 1 - Install duct accessories according to applicable details in SMACNA's "HVAC Duct Construction Standards--Metal and Flexible" for metal ducts and in NAIMA AH116, "Fibrous Glass Duct Construction Standards," for fibrous-glass ducts.

PRODUCT DATA SHEET 2 - Provide duct accessories of materials suited to duct materials; use galvanized-steel accessories in galvanized-steel and fibrous-glass ducts, stainless-steel accessories in stainless-steel ducts, and aluminum accessories in aluminum ducts.

PRODUCT DATA SHEET 3 - Install backdraft dampers on exhaust fans or exhaust ducts nearest to outside and where indicated.

PRODUCT DATA SHEET 4 - Install volume dampers in ducts with liner; avoid damage to and erosion of duct liner.

PRODUCT DATA SHEET 5 - Provide balancing dampers at points on supply, return, and exhaust systems where branches lead from larger ducts as required for air balancing. Install at a minimum of two duct widths from branch takeoff.

PRODUCT DATA SHEET 6 - Provide test holes at fan inlets and outlets and elsewhere as indicated.

PRODUCT DATA SHEET 7 - Install duct access doors to allow for inspecting, adjusting, and maintaining accessories.

PRODUCT DATA SHEET 8 - Install the following sizes for duct-mounting, rectangular access doors:

3.1 One-Hand or Inspection Access: 8 by 5 inches (200 by 125 mm).

3.2 Two-Hand Access: 12 by 6 inches (300 by 150 mm).

3.3 Head and Hand Access: 18 by 10 inches (460 by 250 mm).

3.4 Head and Shoulders Access: 21 by 14 inches (530 by 355 mm).

3.5 Body Access: 25 by 14 inches (635 by 355 mm).

3.6 Body Plus Ladder Access: 25 by 17 inches (635 by 430 mm).

PRODUCT DATA SHEET 9 - Label access doors according to Division 15 Section "Mechanical Identification."

PRODUCT DATA SHEET 10 - Install flexible connectors immediately adjacent to equipment in ducts associated with fans and motorized equipment supported by vibration isolators.

PRODUCT DATA SHEET 11 - Install duct test holes where indicated and required for testing and balancing purposes.

SCHEDULE 2 - ADJUSTING:

PRODUCT DATA SHEET 1 - Adjust duct accessories for proper settings.

PRODUCT DATA SHEET 2 - Final positioning of manual-volume dampers is specified in Division 15 Section "Testing, Adjusting, and Balancing."

END OF SECTION 23 33 00

SECTION 23 34 00 - POWER VENTILATORS

PART 1 - GENERAL

SCHEDULE 1 - RELATED DOCUMENTS:

PRODUCT DATA SHEET 1 - Drawings and general provisions of the Contract, including General and Supplementary Conditions and Division 1 Specification Sections, apply to this Section.

SCHEDULE 2 - SUMMARY:

PRODUCT DATA SHEET 1 - This Section includes the following:

1.1 Ceiling-mounting ventilators.

1.2 Inline fans.

1.3 Propeller Hooded Roof Fans

SCHEDULE 3 - PERFORMANCE REQUIREMENTS:

PRODUCT DATA SHEET 1 - Project Altitude: Base fan-performance ratings on actual Project site elevations.

PRODUCT DATA SHEET 2 - Operating Limits: Classify according to AMCA 99.

SCHEDULE 4 - SUBMITTALS:

PRODUCT DATA SHEET 1 - Product Data: Include rated capacities, furnished specialties, and accessories for each type of product indicated and include the following:

1.1 Certified fan performance curves with system operating conditions indicated.

1.2 Certified fan sound-power ratings.

1.3 Motor ratings and electrical characteristics, plus motor and electrical accessories.

1.4 Material thickness and finishes, including color charts.

1.5 Dampers, including housings, linkages, and operators.

1.6 Fan speed controllers.

PRODUCT DATA SHEET 2 - Shop Drawings: Detail equipment assemblies and indicate dimensions, weights, loads, required clearances, method of field assembly, components, and location and size of each field connection.

PRODUCT DATA SHEET 3 - Field quality-control test reports.

PRODUCT DATA SHEET 4 - Operation and Maintenance Data: For power ventilators to include in emergency, operation, and maintenance manuals.

SCHEDULE 5 - QUALITY ASSURANCE:

PRODUCT DATA SHEET 1 - Electrical Components, Devices, and Accessories: Listed and labeled as defined in NFPA 70, Article 100, by a testing agency acceptable to authorities having jurisdiction, and marked for intended use.

PRODUCT DATA SHEET 2 - AMCA Compliance: Products shall comply with performance requirements and shall be licensed to use the AMCA-Certified Ratings Seal.

PRODUCT DATA SHEET 3 - NEMA Compliance: Motors and electrical accessories shall comply with NEMA standards.

PRODUCT DATA SHEET 4 - UL Standard: Power ventilators shall comply with UL 705.

SCHEDULE 6 - DELIVERY, STORAGE, AND HANDLING:

PRODUCT DATA SHEET 1 - Deliver fans as factory-assembled unit, to the extent allowable by shipping limitations, with protective crating and covering.

PRODUCT DATA SHEET 2 - Disassemble and reassemble units, as required for moving to final location, according to manufacturer's written instructions.

PRODUCT DATA SHEET 3 - Lift and support units with manufacturer's designated lifting or supporting points.

SCHEDULE 7 - COORDINATION:

PRODUCT DATA SHEET 1 - Coordinate installation of equipment supports and roof penetrations. These items are specified in Division 7 Section "Roof Accessories."

PART 2 - PRODUCTS

SCHEDULE 1 - CEILING-MOUNTING VENTILATORS:

PRODUCT DATA SHEET 1 - Manufacturers: Subject to compliance with requirements, provide products by one of the following:

2.1 Greenheck.

2.2 Loren Cook Company.

2.3 Twin City Fans.

PRODUCT DATA SHEET 2 - Description: Centrifugal fans designed for installing in ceiling or wall or for concealed in-line applications.

PRODUCT DATA SHEET 3 - Housing: Steel, lined with acoustical insulation.

PRODUCT DATA SHEET 4 - Fan Wheel: Centrifugal wheels directly mounted on motor shaft. Fan shrouds, motor, and fan wheel shall be removable for service.

PRODUCT DATA SHEET 5 - Grille: Plastic, louvered grille with flange on intake and thumbscrew attachment to fan housing.

PRODUCT DATA SHEET 6 - Electrical Requirements: Junction box for electrical connection on housing and receptacle for motor plug-in.

PRODUCT DATA SHEET 7 - Accessories:

2.1 Isolation: Rubber-in-shear vibration isolators.

SCHEDULE 2 - AXIAL ROOF EXHAUST FANS AND SUPPLY AIR FANS

PRODUCT DATA SHEET 1 - Basis-of-Design Product: Subject to compliance with requirements, provide the product indicated on Drawings or a comparable product by one of the following:

2.1 Greenheck.

2.2 Loren Cook Company.

2.3 Penn Ventilation.

2.4 Or equal.

PRODUCT DATA SHEET 2 - Description: Direct-driven axial fans consisting of housing, wheel, fan shaft, bearings, motor and disconnect switch, drive assembly, curb base, and accessories.

PRODUCT DATA SHEET 3 - Housing: Heavy-gage, removable, spun-aluminum, dome top and outlet baffle; square, one-piece, hinged, aluminum base.

PRODUCT DATA SHEET 4 - Fan: Aluminum housing and aluminum propeller blades statically and dynamically balanced.

PRODUCT DATA SHEET 5 - Accessories:

2.1 Disconnect Switch: Factory installed , non-fusible type, with thermal-overload protection mounted outside fan housing, factory wired through an internal aluminum conduit.

2.2 Bird Screens: Removable, 1/2-inch (13-mm) mesh, brass wire.

2.3 Dampers: Counterbalanced, parallel-blade, backdraft dampers mounted in curb base; factory set to close when fan stops.

2.4 Roof Curbs: Galvanized steel; mitered and welded corners; 1-1/2-inch- (40-mm-) thick, rigid, fiberglass insulation adhered to inside walls; and 1-1/2-inch (40-mm) wood nailer. Size as required to suit roof opening and fan base.

2.5 Configuration: Built-in raised cant and mounting flange.

2.6 Overall Height: 8 inches (200 mm-)

PRODUCT DATA SHEET 6 - Capacities and Characteristics: See drawings for model numbers, capacities and characteristics.

SCHEDULE 3 - MOTORS:

PRODUCT DATA SHEET 1 - Comply with requirements in Division 23 Section "Motors."

PRODUCT DATA SHEET 2 - Enclosure Type: Totally enclosed, fan cooled.

SCHEDULE 4 - SOURCE QUALITY CONTROL:

PRODUCT DATA SHEET 1 - Sound-Power Level Ratings: Comply with AMCA 301, "Methods for Calculating Fan Sound Ratings from Laboratory Test Data." Factory test fans according to AMCA 300, "Reverberant Room Method for Sound Testing of Fans." Label fans with the AMCA-Certified Ratings Seal.

PRODUCT DATA SHEET 2 - Fan Performance Ratings: Establish flow rate, pressure, power, air density, speed of rotation, and efficiency by factory tests and ratings according to AMCA 210, "Laboratory Methods of Testing Fans for Rating."

PART 3 - EXECUTION

SCHEDULE 1 - INSTALLATION:

PRODUCT DATA SHEET 1 - Install power ventilators level and plumb.

PRODUCT DATA SHEET 2 - Secure roof-mounting fans to roof curbs with cadmium-plated hardware. Refer to Division 7 Section "Roof Accessories" for installation of roof curbs.

PRODUCT DATA SHEET 3 - Ceiling Units: Suspend units from structure; use steel threaded rods.

PRODUCT DATA SHEET 4 - Install units with clearances for service and maintenance.

PRODUCT DATA SHEET 5 - Label units according to requirements specified in Division 23 Section "Mechanical Identification."

SCHEDULE 2 - CONNECTIONS:

PRODUCT DATA SHEET 1 - Duct installation and connection requirements are specified in other Division 23 Sections. Drawings indicate general arrangement of ducts and duct accessories. Make final duct connections with flexible connectors. Flexible connectors are specified in Division 23 Section "Duct Accessories."

PRODUCT DATA SHEET 2 - Install ducts adjacent to power ventilators to allow service and maintenance.

PRODUCT DATA SHEET 3 - Ground equipment according to Division 26 Section "Grounding and Bonding."

PRODUCT DATA SHEET 4 - Connect wiring according to Division 26 Section "Conductors and Cables."

SCHEDULE 3 - ADJUSTING:

PRODUCT DATA SHEET 1 - Adjust damper linkages for proper damper operation.

PRODUCT DATA SHEET 2 - Adjust belt tension.

PRODUCT DATA SHEET 3 - Refer to Division 23 Section "Testing, Adjusting, and Balancing" for testing, adjusting, and balancing procedures.

PRODUCT DATA SHEET 4 - Replace fan and motor pulleys as required to achieve design airflow.

PRODUCT DATA SHEET 5 - Lubricate bearings.

END OF SECTION 23 34 00

SECTION 23 37 13 - DIFFUSERS, REGISTERS, AND GRILLES

PART 1 - GENERAL

SCHEDULE 1 - RELATED DOCUMENTS:

PRODUCT DATA SHEET 1 - Drawings and general provisions of the Contract, including General and Supplementary Conditions and Division 1 Specification Sections, apply to this Section.

SCHEDULE 2 - SUMMARY:

PRODUCT DATA SHEET 1 - This Section includes ceiling, floor, duct, and wall-mounted diffusers, registers, and grilles.

PRODUCT DATA SHEET 2 - Related Sections include the following:

1.1 Division 23 Section "Duct Accessories" for volume-control dampers not integral to diffusers, registers, and grilles.

SCHEDULE 3 - SUBMITTALS:

PRODUCT DATA SHEET 1 - Product Data: For each product indicated, include the following:

1.1 Data Sheet: Indicate materials of construction, finish, and mounting details; and performance data including throw and drop, static-pressure drop, and noise ratings.

1.2 Diffuser, Register, and Grille Schedule: Indicate Drawing designation, room location, quantity, model number, size, and accessories furnished.

SCHEDULE 4 - MANUFACTURERS:

PRODUCT DATA SHEET 1 - In other Part 2 articles where titles below introduce lists, the following requirements apply to product selection:

1.1 Products: Subject to compliance with requirements, provide one of the products specified.

1.2 Manufacturers: Subject to compliance with requirements, provide products by one of the manufacturers specified.

SCHEDULE 5 - GRILLES AND REGISTERS:

PRODUCT DATA SHEET 1 - Adjustable Bar Grille and Register:

1.1 Manufacturers:

A. Titus.

B. Price Industries.

1.2 Material: Aluminum.

1.3 Finish: White powder coat with 1000 hour salt spray test.

1.4 Blade Arrangement: Adjustable horizontal spaced 3/4 inch (19 mm) apart.

1.5 Frame: 1-1/4 inches (32 mm) wide.

1.6 Mounting: Countersunk screw.

PRODUCT DATA SHEET 2 - Fixed Face Grille or Register:

1.1 Manufacturers:

A. Titus.

B. Price Industries.

1.2 Material: Aluminum.

1.3 Finish: White powder coat with 1000 hour salt spray test.

1.4 Blade Arrangement: Fixed horizontal, 35^0 deflection, spaced ¾ inch (19 mm) apart.

1.5 Frame: 1-1/4 inches (32 mm) wide.

1.6 Mounting: Countersunk screw.

SCHEDULE 6 - FLOOR GRILLES:

PRODUCT DATA SHEET 1 - Linear Bar Grille:

1.1 Manufacturers:

A. Titus.

B. Price Industries.

1.2 Material: Aluminum.

1.3 Finish: White powder coat with 1000 hour salt spray test.

1.4 Blade Arrangement: Fixed horizontal, 30^0 deflection, spaced 7/16 inch apart.

1.5 Mounting: Floor mounted.

SCHEDULE 7 - DUCT MOUNTED DIFFUSERS:

PRODUCT DATA SHEET 1 - Direct Spiral Diffuser:

1.1 Manufacturers:

A. Titus.

B. Price Industries.

1.2 Material: Aluminum.

1.3 Finish: White powder coat with 1000 hour salt spray test.

1.4 Mounting: Duct mounted.

SCHEDULE 8 - SOURCE QUALITY CONTROL:

PRODUCT DATA SHEET 1 - Verification of Performance: Rate diffusers, registers, and grilles according to ASHRAE 70, "Method of Testing for Rating the Performance of Air Outlets and Inlets."

PART 2 - EXECUTION

SCHEDULE 1 - EXAMINATION:

PRODUCT DATA SHEET 1 - Examine areas where diffusers, registers, and grilles are to be installed for compliance with requirements for installation tolerances and other conditions affecting performance of equipment.

PRODUCT DATA SHEET 2 - Proceed with installation only after unsatisfactory conditions have been corrected.

SCHEDULE 2 - INSTALLATION:

PRODUCT DATA SHEET 1 - Install diffusers, registers, and grilles level and plumb.

PRODUCT DATA SHEET 2 - Outlets and Inlets: Drawings indicate general arrangement of ducts, fittings, and accessories. Air outlet and inlet locations have been indicated to achieve design requirements for air volume, noise criteria, airflow pattern, throw, and pressure drop. Make final locations where indicated, as much as practicable. Where architectural features or other items conflict with installation, notify Architect for a determination of final location.

PRODUCT DATA SHEET 3 - Install diffusers, registers, and grilles with airtight connections to ducts and to allow service and maintenance of dampers and air extractors.

SCHEDULE 3 - ADJUSTING:

PRODUCT DATA SHEET 1 - After installation, adjust diffusers, registers, and grilles to air patterns indicated, or as directed, before starting air balancing.

END OF SECTION 23 37 13

SECTION 23 75 13 - ROOFTOP AIR CONDITIONERS

PART 1 - GENERAL

SCHEDULE 1 - RELATED DOCUMENTS:

PRODUCT DATA SHEET 1 -Drawings and general provisions of the Contract, including General and Supplementary Conditions and Division 1 Specification Sections, apply to this Section.

SCHEDULE 2 - SUBMITTALS:

PRODUCT DATA SHEET 1 -Product Data: Include manufacturer's technical data for each model indicated, including rated capacities, dimensions, required clearances, characteristics, furnished specialties, and accessories.

PRODUCT DATA SHEET 2 - Shop Drawings: Detail equipment assemblies and indicate dimensions, weights, loads, required clearances, method of field assembly, components, and location and size of each field connection. Prepare the following by or under the supervision of a qualified professional engineer:

1.1 Wiring Diagrams: Power, signal, and control wiring.

PRODUCT DATA SHEET 3 - Manufacturer Seismic Qualification Certification: Submit certification that rooftop air conditioners, accessories, and components will withstand seismic forces defined in Division 23 Section "Mechanical Vibration and Seismic Controls." Include the following:

1.1 Basis for Certification: Indicate whether withstand certification is based on actual test of assembled components or on calculation.

A. The term "withstand" means "the unit will remain in place without separation of any parts from the device when subjected to the seismic forces specified."

B. The term "withstand" means "the unit will remain in place without separation of any parts from the device when subjected to the seismic forces specified and the unit will be fully operational after the seismic event."

1.2 Dimensioned Outline Drawings of Equipment Unit: Identify center of gravity and locate and describe mounting and anchorage provisions.

1.3 Detailed description of equipment anchorage devices on which the certification is based and their installation requirements.

PRODUCT DATA SHEET 4 - Field quality-control test reports.

PRODUCT DATA SHEET 5 - Operation and Maintenance Data: For rooftop air conditioners to include in emergency, operation, and maintenance manuals.

PRODUCT DATA SHEET 6 - Warranties: Special warranties specified in this Section.

SCHEDULE 3 - QUALITY ASSURANCE:

PRODUCT DATA SHEET 0 - Product Options: Drawings indicate size, profiles, and dimensional requirements of rooftop air conditioners and are based on the specific system indicated. Refer to Division 1 Section "Product Requirements."

PRODUCT DATA SHEET 1 - Electrical Components, Devices, and Accessories: Listed and labeled as defined in NFPA 70, Article 100, by a testing agency acceptable to authorities having jurisdiction, and marked for intended use.

PRODUCT DATA SHEET 2 - Fabricate and label refrigeration system to comply with ASHRAE 15, "Safety Code for Mechanical Refrigeration."

PRODUCT DATA SHEET 3 - Energy-Efficiency Ratio: Equal to or greater than prescribed by ASHRAE 90.1, "Energy Efficient Design of New Buildings except Low-Rise Residential Buildings."

PRODUCT DATA SHEET 4 - Coefficient of Performance: Equal to or greater than prescribed by ASHRAE 90.1, "Energy Efficient Design of New Buildings except Low-Rise Residential Buildings."

PRODUCT DATA SHEET 5 - ARI Certification: Units shall be ARI certified and listed.

PRODUCT DATA SHEET 6 - ARI Compliance for Units with Capacities 135,000 Btuh and More: Rate rooftop air-conditioner capacity according to ARI 340/360, "Commercial and Industrial Unitary Air-Conditioning and Heat Pump Equipment."

1.1 Sound Power Level Ratings: Comply with ARI 270, "Sound Rating of Outdoor Unitary Equipment."

SCHEDULE 4 - COORDINATION:

PRODUCT DATA SHEET 0 - Coordinate installation of roof curbs, equipment supports, and roof penetrations. These items are specified in Division 7 Section "Roof Accessories."

PRODUCT DATA SHEET 1 - Coordinate size, location, and installation of rooftop air-conditioner manufacturer's roof curbs and equipment supports with roof installer.

1.1 Coordinate installation of restrained vibration isolation roof-curb rails.

SCHEDULE 5 - WARRANTY:

PRODUCT DATA SHEET 0 - Special Warranty: Manufacturer's standard form in which manufacturer agrees to replace components of rooftop air conditioners that fail in materials or workmanship within specified warranty period.

1.1 Warranty Period for Compressors: Manufacturer's standard, but not less than five years from date of Substantial Completion.

SCHEDULE 6 - EXTRA MATERIALS:

PRODUCT DATA SHEET 0 - Furnish extra materials described below that match products installed and that are packaged with protective covering for storage and identified with labels describing contents.

1.1 Filters: One set of filters for each unit.

PART 2 - PRODUCTS

SCHEDULE 1 - MANUFACTURERS:

PRODUCT DATA SHEET 1 - In other Part 2 articles where subparagraph titles below introduce lists, the following requirements apply for product selection:

2.1 Available Manufacturers: Subject to compliance with requirements, manufacturers offering products that may be incorporated into the Work include, but are not limited to, the following:

A. York International Corp.

B. Carrier Corp.

C. Trane.

SCHEDULE 2 - ROOFTOP AIR CONDITIONERS:

PRODUCT DATA SHEET 1 - Description: Factory assembled and tested; designed for exterior installation; consisting of compressor, indoor and outside refrigerant coils, indoor fan and outside coil fan, power exhaust system, refrigeration and temperature controls, filters, and dampers. Provide corrosion-protection coating to entire unit. See Division 23 section entitled “Corrosion Resistant Coating”.

PRODUCT DATA SHEET 2 - Casing: Galvanized-steel construction with enamel paint finish, removable panels or access doors with neoprene gaskets for inspection and access to internal parts, minimum 1/2-inch- thick thermal insulation, knockouts for electrical and piping connections, exterior condensate drain connection, and lifting lugs.

PRODUCT DATA SHEET 3 - Indoor Fan: Forward curved, centrifugal, belt driven with adjustable motor sheaves, grease-lubricated ball bearings, and motor.

PRODUCT DATA SHEET 4 - Outside Coil Fan: Propeller type, directly driven by permanently lubricated motor.

PRODUCT DATA SHEET 5 - Refrigerant Coils: Aluminum-plate fin and seamless copper tube in steel casing with equalizing-type vertical distributor. Provide corrosion-protection coating to both coils. See Division 23 section entitled “Corrosion Resistant Coating”.

PRODUCT DATA SHEET 6 - Compressor(s): Number as scheduled hermetic scroll compressors with integral vibration isolators, internal overcurrent and over-temperature protection, internal pressure relief, and crankcase heater(s).

PRODUCT DATA SHEET 7 - Refrigeration System:

2.1 Compressor(s).

2.2 Outside coil and fan.

2.3 Indoor coil and fan.

2.4 Check valves.

2.5 Expansion valves with replaceable thermostatic elements.

2.6 Refrigerant dryers.

2.7 High-pressure switches.

2.8 Low-pressure switches.

2.9 Independent refrigerant circuits.

2.10 Brass service valves installed in discharge and liquid lines.

2.11 Refrigerant Charge: R-410A.

2.12 Hot-Gas Bypass: Factory-installed valve.

PRODUCT DATA SHEET 8 - Filters: 2-inch- thick, fiberglass, pleated, throwaway filters mounted in a filter rack. Filters shall have a Minimum Efficiency Reporting Value of MERV 8 when evaluated under the guidelines of ASHRAE Standard 52.2-2007.

PRODUCT DATA SHEET 9 - Economizer: Return- and outside-air dampers with neoprene seals, outside-air filter, and hood.

2.1 Damper Motor: Fully modulating spring return with adjustable minimum position.

2.2 Control: Electronic-control system uses outside-air temperature to adjust mixing dampers.

2.3 Relief: Power exhaust system.

PRODUCT DATA SHEET 10 - Power Connection: Provide for single connection of power to unit with unit-mounted disconnect switch accessible from outside unit and control-circuit transformer with built-in circuit breaker.

PRODUCT DATA SHEET 11 - Controls in first paragraph and subparagraphs below contain all options available as standard on most solid-state control boards. Include only those required for Project.

PRODUCT DATA SHEET 12 - Unit Controls: Solid-state control board and components contain at least the following features:

2.1 Indoor fan on/off delay.

2.2 Default control to ensure proper operation after power interruption.

2.3 Service relay output.

2.4 Field-adjustable control parameters.

2.5 Economizer control.

2.6 Low-ambient control, allowing operation down to 0 deg F.

2.7 Low-refrigerant pressure control.

2.8 Thermostat

PRODUCT DATA SHEET 13 - Accessories:

2.1 PVC condensate drain trap.

2.2 Coil guards of painted, galvanized-steel wire.

2.3 Power exhaust fan, propeller type.

PART 3 - EXECUTION

SCHEDULE 1 - INSTALLATION:

PRODUCT DATA SHEET 1 - Install units level and plumb, maintaining manufacturer's recommended clearances.

PRODUCT DATA SHEET 2 - Install restrained vibration isolation roof-curb rails on roof structure. Install and secure rooftop air conditioners on rails and coordinate roof penetrations and flashing with roof construction. Restrained isolation roof-curb rails are specified in Division 23 Section "HVAC Vibration and Seismic Controls."

SCHEDULE 2 - CONNECTIONS:

PRODUCT DATA SHEET 1 - Duct installation requirements are specified in other Division 23 Sections. Drawings indicate the general arrangement of ducts.

PRODUCT DATA SHEET 2 - Electrical System Connections: Comply with applicable requirements in Division 26 Sections for power wiring, switches, and motor controls.

PRODUCT DATA SHEET 3 - Ground equipment according to Division 26 Section "Grounding and Bonding."

PRODUCT DATA SHEET 4 - Tighten electrical connectors and terminals according to manufacturer's published torque-tightening values. If manufacturer's torque values are not indicated, use those specified in UL 486A and UL 486B.

SCHEDULE 3 - STARTUP SERVICE:

PRODUCT DATA SHEET 1 - Engage a factory-authorized service representative to perform startup service.

PRODUCT DATA SHEET 2 - Complete installation and startup checks according to manufacturer's written instructions and do the following:

3.1 Inspect for visible damage to unit casing.

3.2 Inspect for visible damage to compressor, air-cooled outside coil, and fans.

3.3 Inspect internal insulation.

3.4 Verify that labels are clearly visible.

3.5 Verify that clearances have been provided for servicing.

3.6 Verify that controls are connected and operable.

3.7 Verify that filters are installed.

3.8 Clean outside coil and inspect for construction debris.

3.9 Adjust vibration isolators.

3.10 Inspect operation of barometric dampers if the unit has barometric dampers.

3.11 Lubricate bearings on fan.

3.12 Inspect fan-wheel rotation for movement in correct direction without vibration and binding.

3.13 Adjust fan belts to proper alignment and tension.

3.14 Start unit according to manufacturer's written instructions.

3.15 Inspect and record performance of interlocks and protective devices; verify sequences.

3.16 Operate unit for an initial period as recommended or required by manufacturer.

3.17 Retain first subparagraph below only for gas-fired units.

3.18 Calibrate thermostats.

3.19 Adjust and inspect high-temperature limits.

3.20 Inspect outside-air dampers for proper stroke and interlock with return-air dampers.

3.21 Start refrigeration system and measure and record the following:

A. Coil leaving-air, dry- and wet-bulb temperatures.

B. Coil entering-air, dry- and wet-bulb temperatures.

C. Outside-air, dry-bulb temperature.

D. Outside-air-coil, discharge-air, dry-bulb temperature.

3.22 Inspect controls for correct sequencing of heating, mixing dampers, refrigeration, and normal and emergency shutdown.

3.23 After startup and performance testing, change filters, vacuum heat exchanger and cooling and outside coils, lubricate bearings, adjust belt tension, and inspect operation of power vents.

SCHEDULE 4 - ADJUSTING:

PRODUCT DATA SHEET 1 - Adjust initial temperature set points.

PRODUCT DATA SHEET 2 - Set field-adjustable switches and circuit-breaker trip ranges as indicated.

SCHEDULE 5 - DEMONSTRATION:

PRODUCT DATA SHEET 1 - Engage a factory-authorized service representative to train Owner's maintenance personnel to adjust, operate, and maintain rooftop air conditioners. Refer to Division 1 Section "Closeout Procedures."

END OF SECTION 23 75 13

SECTION 23 81 27 - SPLIT-SYSTEM AIR-CONDITIONING UNITS

PART 1 - GENERAL

SCHEDULE 1 - RELATED DOCUMENTS:

PRODUCT DATA SHEET 1 -Drawings and general provisions of the Contract, including General and Supplementary Conditions and Division 1 Specification Sections, apply to this Section.

SCHEDULE 2 - SUMMARY:

PRODUCT DATA SHEET 1 -This Section includes split-system air-conditioning and heat pump units consisting of separate evaporator-fan and compressor-condenser components.

SCHEDULE 3 - SUBMITTALS:

PRODUCT DATA SHEET 0 - Product Data: Include rated capacities, furnished specialties, and accessories for each type of product indicated. Include performance data in terms of capacities, outlet velocities, static pressures, sound power characteristics, motor requirements, and electrical characteristics.

PRODUCT DATA SHEET 1 - Shop Drawings: Diagram power, signal, and control wiring.

PRODUCT DATA SHEET 2 - Operation and Maintenance Data: For split-system air-conditioning units to include in emergency, operation, and maintenance manuals.

PRODUCT DATA SHEET 3 - Warranty: Special warranty specified in this Section.

SCHEDULE 4 - QUALITY ASSURANCE:

PRODUCT DATA SHEET 0 - Product Options: Drawings indicate size, profiles, and dimensional requirements of split-system units and are based on the specific system indicated. Refer to Division 1 Section "Product Requirements."

PRODUCT DATA SHEET 1 - Electrical Components, Devices, and Accessories: Listed and labeled as defined in NFPA 70, Article 100, by a testing agency acceptable to authorities having jurisdiction, and marked for intended use.

PRODUCT DATA SHEET 2 - Energy-Efficiency Ratio: Equal to or greater than prescribed by ASHRAE 90.1, "Energy Efficient Design of New Buildings except Low-Rise Residential Buildings."

PRODUCT DATA SHEET 3 - Coefficient of Performance: Equal to or greater than prescribed by ASHRAE 90.1, "Energy Efficient Design of New Buildings except Low-Rise Residential Buildings."

SCHEDULE 5 - COORDINATION:

PRODUCT DATA SHEET 0 - Coordinate size, location, and connection details with roof curbs, equipment supports, and roof penetrations specified in Division 7 Section "Roof Accessories."

SCHEDULE 6 - WARRANTY

PRODUCT DATA SHEET 0 - Special Warranty For Compressors: Manufacturer's standard form in which manufacturer agrees to repair or replace components of split-system air-conditioning units that fail in materials or workmanship within specified warranty period.

1.1 Warranty Period: Five years from date of Substantial Completion.

SCHEDULE 7 - EXTRA MATERIALS:

PRODUCT DATA SHEET 0 - Furnish extra materials described below that match products installed and that are packaged with protective covering for storage and identified with labels describing contents.

1.1 Filters: One set of filters for each unit.

PART 2 - PRODUCTS

SCHEDULE 1 - MANUFACTURERS:

PRODUCT DATA SHEET 1 - Available Manufacturers: Subject to compliance with requirements, manufacturers offering products that may be incorporated into the Work include, but are not limited to, the following:

2.1 York International Corp.

2.2 Carrier Corp.

2.3 Trane.

SCHEDULE 2 - CONCEALED EVAPORATOR-FAN COMPONENTS

PRODUCT DATA SHEET 1 - Chassis: Galvanized steel with flanged edges, removable panels for servicing, and insulation on back of panel.

2.1 Insulation: Faced, glass-fiber duct liner.

2.2 Drain Pans: Galvanized steel, with connection for drain; insulated.

PRODUCT DATA SHEET 2 - Refrigerant Coil: Copper tube, with mechanically bonded aluminum fins, complying with ARI 210/240, and with thermal-expansion valve.

PRODUCT DATA SHEET 3 - Fan: Forward-curved, double-width wheel of galvanized steel; directly connected to motor or belt drive.

PRODUCT DATA SHEET 4 - Fan Motors: Comply with requirements in Division 15 Section "Motors."

2.1 Special Motor Features: Multi-tapped, multispeed with internal thermal protection and permanent lubrication.

PRODUCT DATA SHEET 5 - Disposable Filters: 1 inch (25 mm) thick, in fiberboard frames. Filters shall have a Minimum Efficiency Reporting Value of MERV 8 when evaluated under the guidelines of ASHRAE Standard 52.2-2007.

PRODUCT DATA SHEET 6 - Wiring Terminations: Connect motor to chassis wiring with plug connection.

SCHEDULE 3 - AIR-COOLED, COMPRESSOR-CONDENSER COMPONENTS:

PRODUCT DATA SHEET 1 - Casing: Steel, finished with baked enamel in color selected by Architect, with removable panels for access to controls, weep holes for water drainage, and mounting holes in base. Provide brass service valves, fittings, and gage ports on exterior of casing. Provide corrosion-protection coating to entire unit. See Division 23 section entitled “Corrosion Resistant Coating”.

PRODUCT DATA SHEET 2 - Compressor: Hermetically sealed with crankcase heater and mounted on vibration isolation. Compressor motor shall have thermal- and current-sensitive overload devices, start capacitor, relay, and contactor.

2.1 Compressor Type: Scroll.

2.2 Compressor motor with manual-reset high-pressure switch and automatic-reset low-pressure switch.

2.3 Refrigerant Charge: R-410A.

PRODUCT DATA SHEET 3 - Refrigerant Coil: Copper tube, with mechanically bonded aluminum fins, complying with ARI 210/240, and with liquid subcooler. Provide corrosion-protection coating to coil. . See Division 23 section entitled “Corrosion Resistant Coating”.

PRODUCT DATA SHEET 4 - Heat Pump Components: Reversing valve and low-temperature air cut-off thermostat.

PRODUCT DATA SHEET 5 - Fan: Aluminum-propeller type, directly connected to motor.

PRODUCT DATA SHEET 6 - Motor: Permanently lubricated, with integral thermal-overload protection.

PRODUCT DATA SHEET 7 - Low Ambient Kit: Permits operation down to 45 deg F (7 deg C).

SCHEDULE 4 - ACCESSORIES:

PRODUCT DATA SHEET 1 - Control equipment are specified in Division 23 Sections "Automatic Temperature Controls."

PRODUCT DATA SHEET 2 - Automatic-reset timer to prevent rapid cycling of compressor.

PRODUCT DATA SHEET 3 - Refrigerant Line Kits: Soft-annealed copper suction and liquid lines factory cleaned, dried, pressurized, and sealed; factory-insulated suction line with flared fittings at both ends.

PART 3 - EXECUTION

SCHEDULE 1 - INSTALLATION:

PRODUCT DATA SHEET 1 - Install units level and plumb.

PRODUCT DATA SHEET 2 - Install evaporator-fan components using manufacturer's standard mounting devices securely fastened to building structure.

PRODUCT DATA SHEET 3 - Install roof-mounting compressor-condenser components on equipment supports specified in Division 7 Section "Roof Accessories." Anchor units to supports with removable, cadmium-plated fasteners.

PRODUCT DATA SHEET 4 - Install seismic restraints.

PRODUCT DATA SHEET 5 - Install compressor-condenser components on restrained, spring isolators with a minimum static deflection of 1 inch (25 mm). Refer to Division 23 Section entitled "HVAC Vibration and Seismic Controls."

PRODUCT DATA SHEET 6 - Install and connect pre-charged refrigerant tubing to component's quick-connect fittings. Install tubing to allow access to unit.

SCHEDULE 2 - CONNECTIONS:

PRODUCT DATA SHEET 1 - Piping installation requirements are specified in other Division 23 Sections. Drawings indicate general arrangement of piping, fittings, and specialties.

PRODUCT DATA SHEET 2 - Install piping adjacent to unit to allow service and maintenance.

PRODUCT DATA SHEET 3 - Duct Connections: Duct installation requirements are specified in Division 23 Section "Metal Ducts." Drawings indicate the general arrangement of ducts. Connect ducts to split-system air-conditioning units with flexible duct connectors. Flexible duct connectors are specified in Division 23 Section "Duct Accessories."

PRODUCT DATA SHEET 4 - Ground equipment according to Division 26 Section "Grounding and Bonding."

PRODUCT DATA SHEET 5 - Electrical Connections: Comply with requirements in Division 16 Sections for power wiring, switches, and motor controls.

SCHEDULE 3 - FIELD QUALITY CONTROL:

PRODUCT DATA SHEET 1 - Manufacturer's Field Service: Engage a factory-authorized service representative to inspect, test, and adjust field-assembled components and equipment installation, including connections. Report results in writing.

PRODUCT DATA SHEET 2 - Perform the following field tests and inspections and prepare test reports:

3.1 Leak Test: After installation, charge system and test for leaks. Repair leaks and retest until no leaks exist.

3.2 Operational Test: After electrical circuitry has been energized, start units to confirm proper motor rotation and unit operation.

3.3 Test and adjust controls and safeties. Replace damaged and malfunctioning controls and equipment.

PRODUCT DATA SHEET 3 - Remove and replace malfunctioning units and retest as specified above.

SCHEDULE 4 - STARTUP SERVICE:

PRODUCT DATA SHEET 1 - Engage a factory-authorized service representative to perform startup service.

3.1 Complete installation and startup checks according to manufacturer's written instructions.

SCHEDULE 5 - DEMONSTRATION:

PRODUCT DATA SHEET 1 - Engage a factory-authorized service representative to train Owner's maintenance personnel to adjust, operate, and maintain units. Refer to Division 1 Section "Closeout Procedures."

END OF SECTION 23 81 27

SECTION 23 81 50 – CORROSION RESISTANT COATING

PART 1 - GENERAL

SCHEDULE 1 - RELATED DOCUMENTS:

PRODUCT DATA SHEET 0 - Drawings and general provisions of the Contract, including General and Supplementary Conditions and Division 1 Specification Sections, apply to this Section.

SCHEDULE 2 - SUMMARY:

PRODUCT DATA SHEET 0 - This Section includes corrosion resistant coating for components of the heat pumps, evaporator fans, and rooftop air conditioners.

SCHEDULE 3 - SUBMITTALS:

PRODUCT DATA SHEET 0 - Product Data: Include composition of the coating, and standards met by the coating.

PRODUCT DATA SHEET 1 - Warranty: Special warranty specified in this Section.

SCHEDULE 4 - WARRANTY

PRODUCT DATA SHEET 0 - Special Warranty: Standard 5 year application warranty.

1.1 Warranty Period: Optional extended 10-year service warranty.

PART 2 - PRODUCTS

SCHEDULE 1 - MANUFACTURERS:

PRODUCT DATA SHEET 1 - Available Manufacturers: Subject to compliance with requirements, manufacturers offering products that may be incorporated into the Work include, but are not limited to, the following:

2.1 Luvata Coatings.

SCHEDULE 2 - COATING STANDARDS:

PRODUCT DATA SHEET 1 - Coating to meet the following standards:

2.1 Water reducible, liquid stainless steel hard acrylic emulsion corrosion protection coating with 316 stainless steel flake. Non-flammable, non-hazardous, environmentally safe, super low VOC, and high corrosion protection with superior adhesion and proven long term durability.

2.2 Coating to be UV resistant.

2.3 Coating to be USDA approved.

2.4 Impact Resistance: ASTM D2794-93: 160”# Direct, 160”# Reverse.

2.5 Cross Hatch Adhesion: ASTM D3359, Method B. Rates 5B on steel and aluminum.

2.6 Pencil Hardness: ASTM D3363: 3H.

2.7 Mandrel Bend: ASTM D522, Method B: Pass 3/16 Bend.

2.8 Sag Resistance: ASTM D4400: No sag at 12 mils.

2.9 Cleaning/Thinning Solvent: Water.

2.10 Weathering: ASTM D3051: No loss of gloss, blisters or corrosion after 1500 hours.

2.11 Humidity: ASTM D4585: No blisters after 1000 hours.

2.12 Temperature Range: Cured: -40°F to 400°F.

2.13 Odor: Little to none.

2.14 VOC Content: 39 g/l maximum.

PART 3 - EXECUTION

SCHEDULE 1 - INSTALLATION:

PRODUCT DATA SHEET 1 - Install coating on condenser coil, evaporator coil, equipment cabinet, and other air stream components.

END OF SECTION 23 81 50

SECTION 26 05 00 – ELECTRICAL DESIGN & FIRE ALARM SYSTEM

PART 1 - GENERAL

1.1 SUMMARY

A. The General Conditions and applicable portions of other sections are a part of this section, the same as if here written.

B. This section, together with the electrical and related drawings and documents is intended to specify complete and operable electrical and related systems and may apply to performance by other than electrical trades, just as other sections may apply to performance by the electrical trade.

C. The Contractor shall be responsible for determining the extent of work to be performed under this section by the electrical and other trades. Where a specific trade is mentioned, it is a means of referring to a separation of work corresponding to the separation shown on the plans and to avoid duplication or omission of related work by two or more trades.

D. The work under this section shall be so organized, planned and coordinated with others that the project will proceed expeditiously and on schedule and conflicts will be avoided. Refer to other applicable portions of the contract documents even though not specifically referenced.

E. All electrical material and equipment of similar characteristics and use shall be of the same manufacturer and shall closely match in appearance. Material and equipment of identical characteristics and use shall be identical.

1.2 DESCRIPTION OF WORK

A. Work Included: This Specification and the Drawings cover furnishing and installing the complete, operable electrical system including, but not limited to, the following systems complete and operative:

1. 208Y/120 Volt, 3 phase, 4-wire lighting and power systems including panels, feeders, switchboard and associated equipment.

2. Branch circuit wiring.

3. Lighting fixtures, complete with lamps.

4. Grounding system.

5. Electrical work for mechanical systems except where specified under other sections.

B. Work under this Section on Mechanical Systems:

1. Power (line voltage) conduits, wiring, outlets and connections shall be furnished and installed under the Electrical Section of the Specifications.

2. HVAC and plumbing control and interlock wiring regardless of voltage, and conduits for same, will be provided, wired and connected under Division 15 unless specifically noted otherwise on the plans.

3. All magnetic and manual motor starters, contactors, relays, push button stations, control equipment, etc. shall be furnished under the Mechanical Section of the Specifications unless specifically noted on the Drawings. Refer to diagrams for installation and connections.

4. Disconnect switches and miscellaneous devices shall be furnished, installed and connected under the Electrical Section of the Specifications, as indicated on the plans.

5. If substitution of control equipment other than that specified requires any changes in the electrical work from that shown on the plans in order to accomplish the correct control sequence, any extra cost of the equipment or electrical work shall be the responsibility of the Mechanical Contractor.

   Final connections of the electric power driven equipment shall be made under the Electrical Section of the Specifications.

6. Equipment furnished and/or installed under the Electrical Specifications shall be installed in locations and in such a manner as required by the Mechanical and Plumbing Specifications and as directed by the Engineer. The Electrical Contractor shall refer to all other sections of these plans and Specifications and coordinate work to provide complete, operating Mechanical and Plumbing systems.

C. Related Work Specified elsewhere: The following work, although similar in nature or relevant to the work of the Section, is specified in other Sections or is to be furnished by others:

   1. Electrical equipment or installations specified herein to be furnished as a part of Mechanical Section of Specifications.

   2. Temporary site construction power.

1.3 DRAWINGS

The Contract Drawings indicate the extent and the general locations and arrangement of equipment, conduit, and wiring. Lighting fixtures, equipment and outlets shall be located to avoid interference with mechanical or structural features; in addition, lighting fixtures shall be symmetrically located according to the room arrangement. All locations for electrical work shall be checked and coordinated with the Architectural Drawings. If any conflicts occur necessitating departures from the Contract Drawings, details of departures and reasons therefore shall be submitted as soon as practicable for written approval, and the equipment shall not be installed until approval is received.

1.4 CODES AND REGULATIONS

A. All work and materials shall be in accordance with applicable requirements of public

authorities having jurisdiction and utilities furnishing services. Nothing in the plans or specifications shall be construed as permitting work that is not in conformance with applicable codes or regulations. Codes governing this work include but are not limited to the latest approved edition of the following:

1. National Fire Protection Associations' National Electrical Code.

2. California Administrative Codes.

3. Occupational Safety and Health Act (OSHA).

4. Local Ordinances and Regulations.

5. Underwriters Laboratories, Inc. (U.L.) Published Standards.

B. Requirements of codes and regulations shall be considered as minimum. Where contract documents exceed, without violating, code and regulation requirements, contract document shall take precedence. Where codes conflict, the more stringent shall apply.

C. The Contractor shall furnish all materials and labor required for compliance with codes and regulations, even though not specifically mentioned or shown.

1.5 STANDARDS

1. Electrical material and equipment shall have been tested and listed or labeled as conforming to approved published standards by Underwriters' Laboratories where such listing or labeling service is available for the class of material or equipment used. Where applicable, listing or labeling shall apply to the complete assembled equipment and not to the components alone. Where listing or labeling service is not available for an assembly, the components shall be listed or labeled and applied within their ratings.

2. Electrical installations shall conform to the standards set forth in the National Electrical Contractors Association (NECA) "Installation Standards Handbook".

1.6 LOCATIONS AND DIMENSIONS

1. Install all material and equipment in such a manner as to avoid obstructions, preserve clearances, maintain code spacings and keep openings and passageways clear.

2. The drawings are diagrammatic to the extent that many offsets, bends, fittings and exact locations are not shown. The Contractor shall determine the best methods, exact locations and routes for his installation and note any conflicts or obstructions. The locations shown for conduits, outlets, materials and equipment may be refined to meet the architectural, structural and mechanical conditions with the approval of the Owner. Where dimensions are shown, they shall be adhered to as closely as practicable.

3. Where apparatus and equipment is shown to scale or dimensioned on the drawings, dimensions have been taken from typical equipment of the general class indicated. The Contractor shall carefully verify that the material and equipment he plans to install will fit into the spaces provided and proper clearances will be maintained. The Contractor shall assume full responsibility for the fitting of his materials and equipment to other equipment and structure.

4. Mounting heights shown are from finished floor or pavement or grade to middle of wall mounted outlet boxes and from finished floor to bottom of suspended fixtures unless otherwise indicated.

5. The exact locations of borings, trenches, excavations, ground rods and all new sub-surface work shall be adjusted to avoid damaging or disturbing any existing underground structure, pipe, or cable. The Contractor shall make every reasonable effort to determine their existing correct locations.

1.7 PERMITS AND INSPECTIONS

Apply and pay for all permits required by any public authorities having jurisdiction and arrange and pay for inspections required. Deliver any certificates of such inspections to the Owner.

1.8 ELECTRICAL AND TELEPHONE SERVICES

A. Contractor shall be responsible for and shall include in his work all service charges and costs and all equipment, material and labor required to provide power and telephone services shown.

B. Contractor shall contact the serving utilities and make all arrangements for obtaining the correct services at the proper times.

C. Electrical services shall conform to the requirements of San Diego Gas & Electric Co. and telephone service shall conform to the requirements of AT&T. Contractor shall verify service locations and requirements prior to bid.

1.9 MATERIAL AND EQUIPMENT SUBMITTALS

A. A materials list, shop drawings, data sheets and samples shall be submitted for review in conformance with Division 1. Submittals shall be made and favorable review secured before material and equipment is installed.

B. The materials list shall include manufacturer, type, and such other descriptive data as may be required to determine the acceptability of each item. Submit lists of materials for the following:

1. Conduits and fittings

2. Outlet boxes and fittings.

3. Wiring devices.

4. Coverplates, including engraving schedules.

5. Conductors, 600 Volt.

6. Lamps.

7. Wire.

C. Provide shop drawings for equipment and systems where required by the specification for those items. Shop drawings shall include information on each component, wiring diagrams, layouts, dimensions, and sufficient other data to establish compliance with the specifications and acceptability of the equipment or system. Shop drawings may be catalog data sheets where indicated, providing sufficient detail is shown. Submit shop drawings for the following:

1. Panelboards.

2. Circuit breakers.

3. Disconnect switches.

4. Relays and contactors.

5. Lighting fixtures with photometric data, and choice of standard finishes available for selection by the Resident Engineer and the Architect, and full data on special finishes specified.

6. Terminal cabinets.

7. Nameplate schedules.

8. Time clocks.

9. Main switchboards.

D. Samples may be required at the discretion of the Owner.

E. If equipment other than specified is submitted, submit scaled plans for all electrical equipment rooms and areas. Plans shall be at scale of 1/4-inch equals one foot, shall show actual dimensions of equipment proposed for use and required working clearances. Plans shall accompany shop drawings.

F. Late, incorrect, improper or rejected submittals will not be acceptable reasons for delaying the work or substituting non-specified material or equipment. The Contractor is responsible for providing proper submittals and allowing adequate time for their processing.

G. The Contractor shall assume any extra costs to other work or trades resulting from the use of substitutions. All substitutions shall be supplied as approved at no extra charge.

1.10 AS-BUILT DRAWINGS

A. On a set of contract drawings, kept at the site during construction, the Contractor shall mark all work that is installed differently from that shown, including any revised circuitry, material or equipment, and sufficient dimensions to locate all materials installed beneath and outside the building such as underground conduits, cabling, ground rods and stub-outs.

B. The marked drawings shall be kept current as the work progresses and shall be available for inspection upon request. At the close of construction these shall be transferred to a set of reproducibles and turned over to the owner.

C. The correct and completed "as-built" drawings are a pre-requisite to final contract payment in conformance with Division 1.

1.11 GUARANTEE

A. All work shall be guaranteed for a minimum period of one year from either the official date of completion or from the official date of acceptance by the Owner whichever is the later date.

B. Certain items shall be guaranteed for a longer period, as stated in the specification for those items.

C. Should any trouble develop during this time due to defective material, faulty workmanship, or non-compliance with plans, specifications, codes, or directions of the Owner, the Resident Engineer, Architect, Engineer or Inspector the Contractor shall furnish all necessary labor and materials to correct the trouble without additional charges.

PART 2 - PRODUCTS

2.1 SWITCHBOARDS - 600 VOLT

A. Switchboards shall be factory assembled type by Siemans or equal. Voltage, phase, wire, rating, location, arrangement and components shall be as shown on the drawings. All switchboards shall be by the same manufacturer.

B. Switchboards shall be free standing units of angle iron or formed steel construction enclosed on the four sides and top. Top, front and back panels shall be die formed of code gauge steel with no raw metal edges on the front.

C. Switchboards shall be shop finished in ANSI 61 gray enamel. All front plates shall be baked to obtain maximum finish hardness.

D. Busing shall be tin plated aluminum. Dimensions of busbars shall be based upon the ampacity shown on the plans. Busing shall extend the full height of distribution sections. All busbar connections shall be flat and fitted accurately for close contact over the entire area of the joints and braces. Busbars shall be rigidly supported, braced for 56,000 amps, symmetrical, and spaced according to the UL and NEC standards for bare busbar.

E. Exterior plates and blank spaces for future space not presently utilized shall be held in place by rigid supports aligned with screw holes and arranged to prevent screws and plates from falling against energized parts. Interiors shall be fastened to the enclosure by adjustable supports with means to provide for proper alignment. Provide for future bus extensions.

F. Bolting of components, framework and bussing shall be aligned with bolt holes and/or slots so as not to introduce stress when tightened. All bolted connections shall be torque tightened in conformance with the manufacturer's recommendations.

G. Securely anchor switchboard to the floor in accordance with the paragraph "Earthquake Requirements". All openings shall be suitably designed to prevent the entry of weather, dust, animals and foreign matter.

H. Provide a nameplate for each switchboard and each item on the face of the switchboard as specified in the Section "Nameplates".

I. After installation the boards shall be carefully cleaned. Any damaged paint shall be retouched with paint provided by the manufacturer.

J. When the equipment is energized, its interior shall be protected by faceplates or temporarily by non-combustible material. Faceplates shall not be removed or left unplaced without the immediate presence of the electrical contractor.

K. Circuit breakers, switches, starters and other equipment to be included as an assembled part of a switchboard shall comply with the sub-section or paragraph where those items are specified.

L. Submit detailed shop drawings of the switchboards, including breakers, contactors, starters, controls, switches, etc., as required under "Submittals".

M. Each distribution section shall be equipped with a ground bus secured directly to the interior of the enclosure. The bus shall be equal to the neutral bus and shall have a separate lug for each ground conductor. No more than one conductor shall be connected to a lug.

N. Provisions shall be made for bus extension to tenant metering equipment, where indicated on single line.

2.2 PANELBOARDS

A. Panelboards shall be factory assembled circuit breaker type by the same manufacturer as supplies the switchboards. The number of poles, type, voltage and ampere ratings shall be as indicated on the plans.

B. Neutral wires shall be connected to a common neutral bus with binding screws or lugs. The neutral bus shall be insulated from the cabinet. Ground wires shall be connected to a common equipment ground bus with binding screws or lugs. The ground bus shall be bonded to the cabinet.

C. All bolted connections shall be torque-tightened in conformance with the manufacturer's recommendations.

D. Cabinets for panelboards shall be of the same manufacturer as the panelboards. Cabinets shall be flush or surface mounted as shown on the plans. Contractor shall coordinate depth of flush cabinets with depth of wall cavities. Cabinets shall be constructed of code gauge steel and shall be shop finished in ANSI 61 light gray enamel. Flush cabinets may be galvanized instead of painted.

E. Fronts of cabinets shall be steel, fastened with screws in countersunk washers, or with approved concealed spring clamps. Cabinet fronts shall have hinged lockable doors with milled keys and circuit schedule holders with clear plastic windows. Doors shall be fastened to trim with substantial flush hinges. Circuit schedules shall be typewritten or printed in ink and shall clearly indicate the circuit and equipment served. Mark spares with pencil only. All panels shall be keyed alike. Fronts shall be shop finished in ANSI 61 light gray enamel.

F. Provide handle blocking (lock-on) and padlock-off devices where shown on the panel schedules.

G. Provide a panel identification nameplate as specified under "Nameplates". Each circuit breaker pole shall be identified with a stamped or otherwise permanent number designation. Circuits shall be arranged as shown on the panel schedules.

H. Submit detailed shop drawings of the panelboards, including breakers and all components as required under "Submittals".

2.3 CIRCUIT BREAKERS

A. Circuit breakers shall be by one of the manufacturers specified for switchboards.

B. Breakers shall be bolt-on type in house panels. Clamp-on, push-on, or plug-in breakers are not acceptable. Removable handle ties and dual, quad or tandem breakers are not acceptable. Mounting hardware, accessories, faceplates, and enclosures shall be provided as necessary for the intended use.

C. Circuit breakers shall be quick-make and quick-break, and the handle mechanism shall be trip-free to prevent holding contacts closed against a short circuit or sustained overload. Contacts shall be of high pressure butt-type and shall be made of a silver-alloy material. Arc chutes shall be provided. Automatic thermal and magnetic tripping devices shall be located in each pole of the breaker. The thermal device shall provide instantaneous tripping on short circuits.

D. Short circuit interrupting capacity shall be as indicated on the plans and shall in no case be less than 10,000 amps symmetrical at the applied voltage.

E. Enclosures for individually mounted circuit breakers shall be NEMA I for dry locations and NEMA 3R for damp or outside locations. Quality, manufacturer and finish shall be the same as panelboards. Provide a nameplate as specified under "Nameplates".

F. Submit data on breakers with switchboard or panelboard shop drawings as required under "Submittals". Submittal shall include interrupting capacities in symmetrical amps at the applied voltage. Letter designations are not sufficient.

2.4 STARTERS AND CONTACTORS - 600 VOLT

A. Provide type and rating shown on the plans and as required. Motor starters and contactors with separate enclosures shall be Allen-Bradley, FPE, General Electric, Gould, Square D, Westinghouse or equal. Enclosures shall be NEMA I for interior dry locations and NEMA 3R for exterior or damp locations with ANSI 61 finish.

B. Starters and contactors furnished or installed under other sections shall comply with special requirements of those sections.

C. Motor starters shall have thermal overload protection in all phases and shall have an H.O.A. switch on the cover. Each starter or contactor controlling equipment remote from the starter or contactor shall have a red pilot light to indicate equipment is energized.

D. Refer to mechanical and electrical plans and control diagrams for accessories and equipment such as transformers and auxiliary contacts and provide as a part of the assembly. Verify all requirements for starters and contactors with the actual mechanical system to be installed.

E. Where shown on the plans, fractional horsepower motors shall have toggle type manual starters with thermal overload protection in each phase. Provide a padlocking-off device on the handle and where the motor is out of sight of the switch provide a pilot light in the cover to indicate switch is closed.

F. Starters and contactors may be combination type. Disconnects shall comply with section "Disconnect Switches" and circuit breakers shall comply with the section "Circuit Breakers".

G. Provide nameplates for each starter and contactor identifying the item controlled as specified in section "Nameplates".

H. Submit data on starters and contactors with shop drawings of assemblies where they will be used as required under "Submittals".

2.5 DISCONNECT SWITCHES

A. Switches shall be by one of the manufacturers specified for switchboards.

B. Enclosures shall be Heavy Duty. They shall be externally operated, quick-make, quick-break, blade type, of number of poles and rating indicated or required. Switches in motor circuits shall be HP rated.

C. Enclosures shall be NEMA I for dry, interior locations and NEMA 3R or 4 for damp, wet or exterior locations. Finish shall be ANSI 61. Covers shall have a defeatable interlock. Covers shall be padlockable.

D. Short circuit withstand ratings shall be RMS symmetrical 200,000 amps.

E. Switches shall accept fuses of the rating and UL or NEMA class indicated. Plug fuses shall not be used. Provide fusetrons on circuits protecting motors unless otherwise indicated. Fuses shall be installed so that the rating is clearly visible from the front without removing the fuse.

F. Where the switch is a part of a switchboard assembly, provide mounting hardware to match the switchboard.

G. Provide a nameplate on each disconnect switch as specified in "Nameplates". Nameplate shall show item controlled, voltage, phase, and source of power.

H. In case of a substitution of material or equipment protected, the disconnect and fuses shall be resized accordingly.

I. Submit data sheets of the disconnect switches as required under "Submittals". Where switches are an assembled part of a switchboard, submit with the switchboard shop drawings.

2.6 SNAP SWITCHES

A. AC general use snap switches shall be toggle handle, quiet operating, premium or heavy duty specification grade, UL listed and verified to meet Federal Specification W-S-896-d and NEMA heavy duty tests. All switches shall be rated 120/277 volts. Devices shall be Hubbell 1221 or equal.

B. Toggle handles shall be black.

C. For pilot lighting, the toggle handle shall illuminate when the switch is in the "on" position. The light shall be white or amber.

D. Switches shall be constructed with silver-cadmium alloy contacts, permanent lubrication, and binding head screws suitable for #10 AWG wire. Connection shall be made by wrapping the wire around the screw or tightening a screw clamp. Push-in type connections are not acceptable. Switches may have built-in pigtail connection in lieu of screw connection. Switches shall have means of grounding.

E. Submit data sheets as required under "Submittals".

2.7 RECEPTACLE OUTLETS

A. Receptacle outlets shall be standard NEMA configuration, grounding type, specification grade.

B. General convenience outlets shall be 15 amp or 20 amp, 125 volt, 2 pole, 3 wire. The attachment screw shall have an automatic grounding clip. A green hex head grounding screw shall be connected to the bridge which shall run around a molded plastic body. The bridge shall be securely locked to the body. Outlets shall be UL listed and meet and NEMA heavy duty performance tests. Contacts shall be high performance double wipe type. Where indicated, outlets shall have isolated

grounding. Outlets shall have binding head screws suitable for #10 AWG wire. Connection shall be made by wrapping the wire around the screw or tightening a wire clamp. Push-in type connections are not acceptable. Outlets may have built-in pigtail connection in lieu of screw connection. The outlet front shall be black. Devices shall be Hubbell 5362 or equal.

C. Special outlets, not listed above, shall be standard NEMA configuration for the application shown and shall be of equal grade and quality to those listed above. An approved cord cap or plug shall be furnished with each receptacle outlet except general convenience and clock type. Plug shall be of the same grade, quality and manufacturer as the outlet. Cord caps and plugs shall be of equal quality to the outlets listed above.

D. All receptacles in public areas shall be tamper-proof. Hubbell 8300SGA or equal.

E. Submit data sheets for outlets and plugs as required under "Submittals".

2.8 OUTLET AND JUNCTION BOXES

A. The size of each outlet or junction box shall be determined by the number and size of wires and conduits entering the box, but shall be not less than 4-inch square and 2-1/8 inches deep unless otherwise indicated.

B. Outlet and junction boxes for interior use shall be galvanized or sherardized, one-piece pressed or welded steel, knockout type, except where other types of boxes are indicated or specified. Plastic, fiber or composition boxes will not be permitted.

C. Outlet and junction boxes for surface exterior use shall be Appleton or Crouse-Hinds FS type, or equal.

D. Outlet boxes shall be equipped with plaster rings, extension rings, inserts and fixture studs as may be required. Knockout seals shall be provided where knockouts are not intact.

E. Telephone outlet boxes shall be 4-11/16" square with single gang rings.

F. Floor boxes shall be brass type (RFB style Walker) with tamper proof screw cap only. Monuments are not acceptable.

2.9 TRIM AND COVERPLATES

A. Provide a trim or coverplate for each outlet, receptacle, switch, device and box. Ganged devices shall have gang plates exactly matching the arrangement and quantity of devices.

B. Plates for flush interior boxes shall be stainless steel.

C. For surface interior outlet and junction boxes of the pressed steel knockout type, use 1/2" raised galvanized steel plates for devices and flat galvanized steel for blank plates.

D. All plates for exterior use shall be gasketed and shall have weatherproof covers for devices.

E. All plates shall fit the box perfectly with no field modification necessary. Surface plates shall not overhang the box. All plates shall be manufactured specifically for the type of outlet, device and box to which they are applied.

F. Plates for telephone outlets shall have one knockout and shall match device plates.

G. Special plates or application shall be as indicated on the drawings or otherwise specified.

2.10 PULL, TERMINAL AND SPLICE BOXES

A. Pullboxes for general above ground use shall be code gauge steel and shall be installed wherever indicated or required in order to facilitate the pulling of wires or cables in conduit. Boxes shall be provided with removable covers secured with machine screws. Where pullboxes are located in damp or wet locations, cover fastening screws or bolts shall be plated with zinc or cadmium and covers shall be gasketed.

B. Pull, terminal and splice boxes for above ground use shall have a painted or galvanized finish. Paint finish shall be ANSI 61.

C. Submit shop drawings or data sheets on boxes as required under "Submittals".

2.11 CONDUITS AND FITTINGS

A. Rigid steel conduit, galvanized or sherardized, shall be used where exposed to the weather for stub-ups, in concrete or masonry construction in contact with the earth, where shown on the plans and may be used for underground work. Fittings shall be of the screw thread type. All joints shall be made liquid and gas-tight. Couplings, lock-nuts, bushings, etc., shall be hot dipped galvanized. Conduits shall be provided with grounding bushings at ends, unless fitted into hubs or similar terminations.

B. Galvanized steel electrical metallic tubing (EMT) shall be used in above ground, interior, dry locations protected from the weather and physical damage and may be used in concrete or masonry construction not in contact with the earth. Fittings shall be compression type with gland sealing rings or set screw type. Indent, or drive-on fittings will not be permitted.

C. Rigid aluminum conduit may be used in lieu of EMT for sizes over 1" in accessible, interior, dry locations. Fittings shall be suitable for aluminum and shall be of the threaded type. Provide bushings at ends unless fitted into hubs or similar terminations.

D. Flexible conduit shall be galvanized steel or aluminum and shall be used where shown on the plans and to connect conduit systems to motors, direct wired and vibrating equipment and as a final connection to lighting fixtures in accessible ceilings. Where used in damp or wet locations it shall be of the liquid-tight type with outer neoprene jacket and suitable liquid-tight fittings. Flexible aluminum conduit shall have a grounding conductor and shall have approved grounding fittings.

E. Rigid non-metallic conduit shall be used for underground work and shall be minimum 3/4". Rigid non-metallic conduit shall be polyvinyl chloride (PVC) Schedule 40 except that service conduits shall be of a type approved by the utility. All fittings, solvent cement, etc., shall be manufactured specifically for the type of material and system with which they are used. Joints shall be made liquid and gas-tight by a method recommended by the manufacturer. Non-metallic conduit shall not be used where exposed to public view or access. Stub-ups shall be rigid galvanized steel with grounding bushings. Conduits shall be buried in the ground and not in the concrete slab.

F. Steel conduits and fittings in underground work shall be thoroughly coated with a bitumastic compound to prevent corrosion except where encased in concrete.

G. Service conduit installations are subject to approval by the serving utilities and shall be installed in strict conformance with their requirements.

2.12 WIRE AND CABLE - 600 VOLT

A. Deliver all wire and cable to site in original unbroken packages, plainly marked or tagged with Underwriters' label, size and type of conductor, type of insulation, name of manufacturing company, trade name of wire and month and year when manufactured, which date shall not exceed 8 months from delivery to site.

B. Wire and cable for use on systems of 50 volts to 600 volts shall be 600 volt rated type THW or THHN except where other insulation is specifically indicated. Conductors shall be copper.

C. Wire and cable for use on systems of below 50 volts shall be 300 volt PVC insulated and suitable for the class of wiring except as otherwise indicated or specified. Conductors shall be copper.

D. Wire and cable for use in lighting fixtures, heaters and other heat producing equipment shall have suitable heat resistant insulation.

E. All conductors shall be stranded.

1. Stranded wire only shall be used where subject to movement, such as for connecting pilot lights on cabinet doors and similar applications. Bundle and support wire in such a way as to avoid tension or flexing at terminals.

2. Where stranded wire is connected to binding screws, nylon, self-insulated, ring tongue,pressure type terminals equal to T & B Sta-kon shall be used on the wire.

F. All wire sizes are stated in America Wire Gauge (AWG).

G. All circuits shall have dedicated neutral whether shown in conductor count on plans or not.

2.13 LIGHTING FIXTURES AND LAMPS

A. Fixture shall be complete with all required accessories and equipment, including lamps, necessary for a complete installation.

B. Fixtures and trims shall be assembled and installed with care to avoid and eliminate light leaks. Where necessary, gasketing, patching, or other effective means shall be used. There shall be no entry for insects or dirt into any fixture.

C. Fixtures and luminaries of one type shall be of one manufacturer and of identical finish and appearance.

D. Contractor shall verify the ceiling or wall construction and the mounting requirements of each fixture and provide plaster frames, special flanges, concrete pour housings, boxes, brackets, adapters, hangers, stems, canopies and other materials necessary to properly mount the fixture.

E. Fixture shall be supported in conformance with the paragraph "Earthquake Requirements".

F. Submit shop drawings on all fixtures as required under "Submittals". "Shop Drawings" may be catalog data sheets if complete information including mounting hardware is shown and identified. Shop drawings shall include mounting details and show compatibility with the ceiling, pole, bracket or other equipment.

2.14 NAMEPLATES AND LABELS

A. Nameplates shall be furnished for circuit breakers, switches, switchboards, and panelboards which are furnished or installed under this section.

B. Nameplates, except as noted, shall be engraved laminated black and white plastic with characters cut through the black plastic. Minimum size shall be 1” high and 3” wide.

C. Attach nameplates with 2 cadmium plated steel bolts, or pan-head screws. Adhesive attachment material will not be acceptable.

D. Provide wire marker on each conductor in electrical panel and junction boxes. This includes all disconnects.

E. Label outside of all cover plates of wiring devices and junction boxes with circuit and panel number. Each branch circuit device cover plate will be labeled (engraved or silk screened) to indicate the branch circuit and panel number. All devices shall be included.

2.15 FLUORESCENT BALLASTS

A. Electronic ballasts for fluorescent and T8 rapid start lamps shall be high power factor, sound rated A, with Class P auto-reset thermal protection. They shall operate all lamps for which they are designed at a frequency of not less than 20 KHZ without detectable flicker, deliver constant full light output and normal lamp life, be unaffected by lamp failure, be surge and transient protected to 6000 volts, operate at a core temperature not to exceed 60 degrees Centigrade, comply with FCC and NEMA limits for RFI and EMI, limit the input current third harmonic content to 10% maximum, and be physically interchangeable with core and coil type magnetic ballasts.

B. Ballasts shall be certified by the California Energy Commission in all applicable categories as required by that agency.

2.16 EMERGENCY BALLASTS

A. Emergency lighting shall be provided by using a standard fluorescent fixture equipped with an emergency ballast. This ballast shall consist of a field replaceable high-temperature, maintenance-free nickel cadmium battery, charger, and electronic circuitry contained in one compact case with a 2' length of flexible conduit. A solid state charging indicator light to monitor the charger and battery, double-pole test switch, and installation hardware shall be provided. The emergency ballast shall be capable of operating one FO32T8 lamp at 2200 lumens initial light output in the emergency mode for a minimum of 90 minutes. The emergency ballast shall be UL listed for installation on top of, or up to 50' remote from fixture, warranted for a full five years from date of purchase, and made in the U.S.A. Bodine #B35 or equal.

B. Compact fluorescent fixtures designated as emergency types shall have integral, factory installed emergency ballasts.

2.17 LAMPS

Lamps shall be as indicated on the fixture schedule and shall be manufactured by General Electric, Phillips, Osram/Sylvania or equal. All fluorescent lamps to be 86CRI. Provide a spare case of lamps for each type.

2.18 TIME SWITCHES

Time switches for control of lighting shall be electronic programmable type, with a minimum of four separately controlled zones, Tork # 7200ZL.

2.19 PHOTOCELLS

The outdoor lighting photoelectric controls (OLC) shall be a U.L. approved unit of the cadmium sulfide cell type light sensor and shall have a time delay output. The OLC shall be designed to turn on at 1 footcandle (+/- 25%) with a turn off ratio of not more than 5. The OLC shall be field adjustable and shall be supplied with an adjustable metal shutter for this purpose. The OLC shall be designed to operate properly over the input voltage range of 105 to 135 volts. The OLC shall be designed such that the output control relay shall have a minimum of 30 seconds time delay too prevent false turn-off from momentary light flashes. The OLC shall be mounted in a totally sealed outdoor weatherproof die cast aluminum housing with standard 1/2" pipe thread mounting. The unit shall be U.L. approved for mounting in any position. The window shall be made of acrylic with the proper UV stabilizers. Manufacturer shall be Area Lighting Research #AT-15, or equal.

2.20 BYPASS TIMERS

Contractor shall furnish manually operated dial type timers to bypass lighting control system, one for every 5000 square feet maximum of conditioned floor area. Timer shall allow the lighting to remain on for no more than two hours when an override is initiated. Bypass timers located in areas where lights controlled by them cannot be seen shall include an annunciated pilot light adjacent. Bypass timers shall control lighting contactors.

PART 3 - EXECUTION

3.1 INSTALLATION AND CONNECTION OF ELECTRICAL EQUIPMENT

A. Where indicated on the plans, equipment furnished by others shall be completely connected to the electrical system as required for correct operation.

B. All outlets, devices, and equipment furnished under this section shall be fully installed and connected under this section.

C. Furnish all necessary flexible conduit, boxes, fittings, receptacles, caps, cords, and other material that may be required for the proper installation of all equipment. Refer to manufacturer's directions where applicable.

D. Coordinate the work carefully to ensure that all electrical requirements of equipment are met and all systems are made complete and operational.

3.2 WORK ON HVAC AND PLUMBING SYSTEMS

A. Complete power circuits, including breakers, switches, disconnects, wire and conduit, outlets and connections to HVAC and plumbing equipment shall be provided under this section.

B. Low voltage starters and controller shall be provided under this section except where part of a package unit or panel specified in Division 15. High voltage starters and controllers will be provided under Division 15.

C. HVAC and plumbing control and interlock wiring regardless of voltage, and conduits for same, will be provided, wired and connected under Division 15 unless specifically noted otherwise on the plans.

D. Equipment furnished and/or installed under the Electrical section shall be installed in locations and in such a manner as required by the HVAC and Plumbing Section or as directed. The Electrical Contractor shall refer to all other sections of these plans and specifications and coordinate the work to provide complete and correct wiring and conduit systems for HVAC and Plumbing work.

E. If substitution of controls or mechanical equipment other than that specified requires any changes in the electrical work from that shown on the plans, any extra cost of the equipment or electrical work shall be the responsibility of the HVAC and/or Plumbing Contractor.

3.3 MISCELLANEOUS WORK

A. Do all miscellaneous metal and concrete work required; all core drilling required; all cutting and patching required; all excavation and backfill required; and provide all hangers, anchors, chases, supports, etc. required for the installation of the electrical systems.

B. Touch up or refinish damaged surfaces of panels, switchboards, and other equipment worked under this section, to the satisfaction of the Resident Engineer and the Architect.

C. Backboards required for equipment installed under this section shall be provided under this section and shall be finished with two coats of fire retardant paint.

D. All work shall be in accordance with applicable portions of the specifications.

3.4 INSTALLATION AND CONNECTION OF WIRING

A. All wiring shall be installed in conduit except where other raceway systems or methods are specifically shown on the drawings or required.

B. Thoroughly clean out all conduit and wire-ways and see that all parts are perfectly dry before pulling any wires. Use no lubricant except as recommended by the wire or cable manufacturer.

C. Make all connections and splices necessary to properly complete the electrical wiring. Connections and splices shall be made only in pull, junction or outlet boxes, or in switchboards, wireways or panels having sufficient code sized gutter space. Connections and splices in 600 volt wires smaller than No. 6 AWG shall be made with "Scotchlok" or "Ideal" or equal spring type connectors and in copper wires No. 6 AWG and larger shall be made with vise or split bolt type solderless connectors and shall be insulated and taped.

D. Soldering will not be an acceptable method of connecting any power conductors assembled under this work.

3.5 INSTALLATION OF CONDUIT AND BOXES

A. All conduit systems shall be mechanically and electrically continuous.

B. The minimum sizes of conduit shall be code size for the number and size of conductors, unless a larger size is shown, in which case such larger size shall be used.

C. Conduits shall be run concealed, except in certain approved and indicated locations. Where run exposed, conduit shall be grouped in neat parallel lines following the lines of the building structure as closely as possible.

D. A 1/8" polyethylene pullrope shall be installed in every run of conduit-only.

E. Conduit installed on equipment shall not obstruct any removable panel, access door or device. Conduit and boxes shall be installed so as not to interfere with or touch any piping, fixtures, or equipment except where attached to it.

F. Conduit to be installed in concrete or masonry work shall be carefully laid and rigidly supported in the forms in such a manner as to provide proper clearance and so that all boxes will be flush after forms have been removed.

G. Threads shall be tapered type, running threads will not be permitted on conduit or nipples.

H. Not more than four 90-degree or bends or the equivalent shall be used on any single run of conduit, except conduit for telephone cable shall not have more than two 90-degree bends or the equivalent. Where more bends are necessary, provide suitable pullboxes or fittings.

I. The ends of all conduit shall be square, carefully reamed out to full size, shouldered in the fittings and bushed or capped wherever stubbed or terminated.

J. Upon completion of any run of conduit, test the run and see that it is free of obstruction. Plug each end with conduit pennies and bushings and leave plugged until ready to pull wire.

K. Conduit shall not run through footings or grade beams or other structural members except where specifically directed by the structural Engineer.

L. Conduit shall not pierce roof except where specifically directed and in a manner that will be completely and permanently weather and watertight. Where pitch pans or equivalent are used, they shall be filled level with the top to avoid water accumulation. Where conduit pierces exterior walls, the installation shall be made weatherproof and watertight.

M. Outlet boxes shall be securely and independently fastened to the structure and in concealed work, shall be supported flush with finished surface of walls or ceilings.

N. Conduit run on the surface of the structure shall be securely supported with pipe straps or strut type channel assemblies. Conduits suspended below the structure shall be supported with split ring and rod or trapeze assemblies.

O. Fasteners shall be machine screws, nut and lockwashers in metal; wood screws in wood; or expansion shields or inserts in masonry or concrete. Wooden inserts will not be acceptable. Perforated strap iron shall not be used as a strap, support or hanger in any case.

P. Conduit run underground and not required to be concrete encased shall be laid on a minimum 3" deep bed of sand so that no stress is induced in the duct and covered with at least 3" of sand before backfilling. Where shown as concrete encased a minimum 3" thick continuous envelope of concrete shall be poured around the conduit starting at one end. Concrete for duct encasement shall be at least 3000 psi concrete with 1 inch maximum aggregate.

3.6 GROUNDING

A. Make good mechanical and electrical contact at all panelboards, switchboards, outlet boxes, junction boxes, and wherever the conduit run is connected. Permanently and effectively ground all switchboards, panelboards, transformers, conduit, fixtures, motors and other equipment as required by all applicable codes, regulations and standards.

B. Flush wall outlets and switches shall have a bonding wire or approved mounting screw from ground terminal to metal box.

C. Provide grounding jumper straps across all dielectric unions, water meters and at similar points in the piping system where the ground path can become interrupted. All non-metallic power conduits shall contain a grounding wire which shall be connected to provide a continuous and adequate equipment grounding system. Conduits shall be properly code sized to accommodate the additional grounding wire. Where insulated, the grounding wire shall be green.

D. Ground rods shall be copper coated steel of length and diameter shown on the plans. They shall be driven vertically leaving the top end not less than 6" below grade.

E. System neutrals shall be grounded at the sources of power only. The service shall be grounded as required by code.

F. All raceways shall include a full sized green insulated ground wire terminated at each outlet box, device enclosure, etc. and connected back at the panelboard, switchboard or cabinet on the appropriate ground bus.

3.7 CLEANING AND PROTECTION

A. At frequent intervals during the time he is on the site, the Contractor shall clean up after his work and remove his debris from the premises leaving the building and grounds clean.

B. Provide adequate protection for all material and equipment worked, furnished or installed under this section. Material and equipment shall be stored in a clean dry place and shall be covered or protected from damage or contamination during storage and after installation.

C. All material and equipment furnished under this section shall be thoroughly cleaned of cement, plaster, paint spatters, and other foreign materials. Oil and grease spots shall be removed with a non-flammable cleaning solvent. All surfaces shall be carefully wiped clean. Boxes, cabinets and enclosures shall be cleaned, inside and out.

3.8 CHECKING AND TESTING OF EQUIPMENT AND SYSTEMS

A. Switchgear, panels, disconnects, starters, contactors and all other equipment installed under this section shall be inspected for defects, and tested for proper operation.

B. Enclosures and cabinets shall be checked for cleanliness inside and out and for defective or damaged finish.

C. Systems shall be tested for short circuits, open circuits, wrong connections and grounds, and shall be free from mechanical and electrical defects.

D. Circuits shall be tested for proper neutral and ground connections.

E. Where required or directed, systems shall be tested in the presence of the Owner to demonstrate that equipment furnished, installed or connected functions in the manner intended.

F. The Contractor shall furnish all necessary instruments and equipment required for making his tests, and shall immediately correct any defective work at no additional cost.

G. Additional testing shall be done as specified in the paragraphs for specific items.

H. Electrical contractor to hire an independent test lab to provide switchgear ground fault system test as well as pick up current and time delay settings.

3.9 EARTHQUAKE REQUIREMENTS

A. All electrical material and equipment shall be installed with bracing, cabling or anchoring necessary to comply with the requirements of the California Administration Code Title 21, table T21-23-J.

B. Pendant, suspended, or stem mounted lighting fixtures shall have a steel stranded aircraft cable attached to the structure and to the fixture at each point of support in addition to the fixture hanger. Cables shall be installed slack and shall be capable of supporting four times the vertical load. The fixture shall be capable of swinging 45 degrees in any direction. Where a 45 degree swing would cause the fixture to strike a wall or other object, suitable cables or other means of bracing shall be added to prevent the fixture from swinging against the other object.

C. Switchboards and similar equipment shall be anchored to the floor in such a manner as to resist a force of 20% of its operating weight in any direction.

END OF SECTION 26 05 00

SECTION 31 10 00 - SITE CLEARING

PART 1 - GENERAL

1.1 DESCRIPTION OF WORK:

1.1.1 Extent of site clearing is shown on drawings. Contractor shall not remove existing plant materials in areas to remain un-improved.

1.1.2 Site clearing includes, but is not limited to, removal of trees and stumps and other vegetation, clearing and grubbing, removing above-grade improvements, and removing below-grade improvements as required, including walls, rip-rap, concrete, paving, utilities and other materials.

1.2 JOB CONDITIONS:

1.2.1 Traffic: Conduct site clearing operations to ensure minimum interference with roads, streets, walks, and other adjacent occupied or used facilities. Do not close or obstruct streets, walks, or other occupied or used facilities without permission from the City of San Diego.

1.2.2 Protection of Adjoining Property: Protect improvements on adjoining properties from damage by the construction activities. Restore improvements to their original condition, as acceptable to parties having jurisdiction.

1.2.3 Complete the clearing and site preparation work before starting earthwork. Erect temporary barricades, enclosure, and protection of adjacent properties before starting site clearance work.

1.2.4 The drawings show general information only. Inspect and review site condition to determine existing conditions, character and extent of removals required which will effect construction operations.

1.2.5 Existing Utilities: Existing underground and overhead lines indicated are shown from best possible information available and must be verified by the contractor prior to starting work. It is the sole responsibility of the Contractor to verify the locations of existing underground and overhead lines.

1.2.6 It shall be understood and agreed that additional underground utilities cannot be or may not have been located and that no indication is contained on the Drawings; therefore exercise extreme caution during clearing, grading, excavating, trenching, and like work. Should such lines be encountered, give notice, in writing, and do not proceed until adequate Investigation has been made, the line identified, and Instructions issued as to how to proceed.

1.2.7 Barricades and work areas: Provide barricades, warning (signed and lighting) and maintenance and supervision thereof, in accordance with applicable Federal, State and local Codes and their respective requirements, or as may be directed from time to time. Do not commence site clearing until barricades and warnings are in place.

1.2.8 Protection of Existing Trees and Vegetation: Protect existing trees and other vegetation indicated to remain in place.

The following practices are prohibited within protection zones:

1.2.8.1 Storage of construction materials, debris, or excavated material.

1.2.8.2 Parking vehicles or equipment.

1.2.8.3 Foot traffic.

1.2.8.4 Erection of sheds or structures.

1.2.8.5 Impoundment of water.

1.2.8.6 Excavation or other digging unless otherwise indicated.

1.2.8.7 Attachment of signs to or wrapping materials around trees or plants unless otherwise indicated.

1.2.9 Except for stripped topsoil and other materials indicated to be stockpiled or otherwise remain Owner's property, cleared materials shall become Contractor's property and shall be removed from Project site.

PART 2 - PRODUCTS

Not applicable to work of this section.

PART 3 - EXECUTION

3.1 SITE CLEARING:

3.1.1 General: Remove trees, stumps, shrubs, grass and other vegetation, improvements, or obstructions interfering with installation of new construction. Removal includes digging out stumps and roots. Carefully and cleanly cut roots and branches of trees indicated to be left standing, where such roots and branches obstruct new construction.

3.1.2 Remove waste materials and unsuitable and excess topsoil from Owner’s property and dispose of off site to a legal disposal area. Burning off debris on site is not permitted.

3.1.3 Maintain topsoil to whatever depths encountered in a manner to allow intermingling with underlying subsoil or other material. Stockpile as required for future use in planting areas as directed by the Resident Engineer and the Architect. Cover storage piles to prevent erosion or windblown dust. Dispose of excess soil off site.

3.1.4 Remove sub-surface obstructions which interfere with the new sub-surface work. The drawings indicate the approximate location of known existing sub-surface utilities, piping, other sub-surface conditions. If existing sub-surface condition are discovered or encountered, which are not indicated on the drawings, stop the site work at such

locations immediately, notify the Resident Engineer and the Architect and obtain instruction from the Resident Engineer and the Architect before proceeding.

3.1.5 Remove existing works and items which are required to be removed in such a manner that minimum damage and disturbance is caused to adjacent and connecting work. Repair or replace work which is damaged by these operations.

3.1.6 The drawings indicate the approximate location of known existing utility lines, either above ground or sub-surface, such as water, electric, sewer that are to be removed or relocated. Existing underground and overhead utility locations must be verified by the Contractor prior to starting work. If existing utilities are discovered or encountered, which are not shown on the drawings, the Resident Engineer and the Architect shall be immediately notified and instruction obtained from the Resident Engineer and the Architect before proceeding. Before their removal, complete required new rerouting as well as required temporary connections and make operative so that their functions to other existing structures served by them can be continuous and beyond this project site before excavation is started.

3.1.7 Remove rip-rap, if encountered, from the jobsite.

3.2 NOISE ABATEMENT AND DUST CONTROL:

3.2.1 Noise Abatement: Limit noise to a reasonable level as related to specific items of equipment used and their hours of use. This does not preclude the use of mechanical equipment, such s jack hammers, power-driven fasteners, and other approved equipment.

3.2.2 Dust Control: During demolition and site clearing, keep dust, and dirt from blowing or spreading by watering down at regular intervals.

3.2.3 Air Pollution Controls: Meet the requirements of Section 11017 of the Government Code and to the requirements of the San Diego County Air Pollution Control District.

3.3 DISPOSAL OF SURPLUS AND WASTE MATERIALS

3.3.1 Remove surplus soil material, unsuitable topsoil, obstructions, demolished materials, and waste materials including trash and debris, and legally dispose of them off Owner's property.

3.3.2 Separate recyclable materials produced during site clearing from other non-recyclable materials. Store or stockpile without intermixing with other materials and transport them to recycling facilities. Do not interfere with other Project work.

END OF SECTION 31 10 00

SECTION 31 22 00 - GRADING

PART 1 - GENERAL

1.1 RELATED DOCUMENTS AND DESCRIPTION OF WORK:

The work includes labor and material necessary to complete site grading as indicated and specified. The Conditions of the Contract, Soils Report prepared by Terra Costa Consulting Group. and Division 1 apply to this section as fully as if repeated herein. Comply with Soils Report if it is more stringent than herein specified.

1.2 RELATED WORK:

1.2.1 Site clearing is specified in Section 31 10 00.

1.2.2 Excavating and backfilling for structures is specified in Section 31 23 00.

1.2.3 Testing and inspection is specified in City documents.

.

1.3 REFERENCES:

1.3.1 **"California Building Code, current edition (CBC)"**. Appendix A33, except as modified hereinafter.

1.3.2 City of San Diego Special Provisions for Improvement of Subdivision Streets.

1.3.3 City of San Diego Standard Specification.

1.3.4 City of San Diego Standard Drawings. Pits070112-03 City Of San Diego Standard Drawings For Public Works Construction, 2012 Edition

1.3.5 City of San Diego Grading Ordinance.

1.4 DEFINITIONS:

1.4.1 Fill: Fill materials placed to raise the natural grade of the site.

1.4.2 On-Site Material: Soil material which is imported from the required excavation on the site.

1.4.3 Imported Material: Soil material which is imported in from off-site areas.

1.4.4 Select Material: On-site or imported material which is approved for use as structural fill.

1.4.5 Structural Fill: Fill upon which the Owner's Soil Engineer has made sufficient tests and observations to enable him to issue a written statement that in his opinion the fill has been placed and compacted in accordance with the specification requirements.

1.4.6 Degree of Compaction: The ratio, expressed as a percentage, of the dry density of

the fill material as compacted in the field to the maximum dry density of the same material as determined by ASTM D 1557-91, as applicable.

1.5 QUALITY ASSURANCE:

1.5.1 Observations and interpretations will be made by the Owner's Soil Engineer during the grading operations. (City to employ Soil Engineer through the Contractor).

PART 2 - PRODUCTS

2.1 FILL MATERIALS:

2.1.1 Select Fill Material: Materials for compacted fill shall consist of material imported or excavated from the project site cut areas that, in the opinion of the Owner's Soil Engineer, is suitable for use in constructing fills. The material shall contain no rocks or hard lumps greater than **6 inches** in size and shall contain at least **40%** of material smaller than 1/4 inch in size. No material of a perishable, spongy, or otherwise improper nature shall be used in filling.

2.1.2 Fine Grading Fill Material: Select fine material containing no rocks or clods over **2 inches** in diameter which in the opinion of the Owner's Soil Engineer is suitable for fill material. Stockpile such material which may be encountered on site, or use, or supplement with approved borrow material for fine grading work.

2.1.3 Where select material is placed within 3 feet of rough grade, it shall contain no rocks or hard lumps greater than 6 inches in size and that swells less than 3% when compacted as herein specified for compacted fill and when subjected to an axial pressure of 160 PSF.

2.1.4 Representative samples of material to be used for fill will be tested in the laboratory by the Owner's Soil Engineer in order to determine the maximum density, optimum moisture content and classification of the soil. In addition, the Soil Engineer will determine the approximate bearing value of a recompacted, saturated sample by direct shear tests or other tests applicable to the particular soil.

2.1.5 During grading operations, soil types other than those analyzed in the report of the soil investigation may be encountered. Consult with the Owner’s Soil Engineer to determine the suitability of these soils.

2.1.6 On-Site Topsoil: Topsoil shall be Class A as described in Section 308-2.1.1 of the Current Standard Specifications for Public Works Construction. Topsoil shall be on-site soil. Unless otherwise required in landscaping documents.

PART 3 - EXECUTION

3.1 PREPARATION OF WORK:

3.1.1 Verify the location and existence of bench marks, survey corners and monuments. Take special care to protect bench marks, survey corners and monuments. Should any become displaced, covered or destroyed, employ a Civil Engineer or Surveyor registered in the State of California to reset those points. Permanently reset corners at

grade or a maximum of 3 inches below grade.

3.1.2 Before beginning work, place grade stakes not more than 50'-0" apart along the tops and bottoms of slopes, and sufficient control in the area of work to establish grades to which the ground surfaces are to be brought. This work shall be done by a Civil Engineer or a Surveyor registered in the State of California, employed by the Contractor.

3.1.3 Remove from the site all rubble, rip-rap, debris, vegetation, roots, weeds, and perishable material.

3.1.4 The surface of areas to receive fill shall be free from ruts, hummocks or other uneven features which would tend to prevent uniform compaction by the equipment used.

3.1.5 Cut and fill quantities as/if shown on the Documents are estimates only. It is the responsibility of the Contractor to calculate and estimate their own quantities at the time of bid to insure a complete grading job.

3.1.6 Step or bench the original ground when the slope of the natural ground receiving fill exceed 20% (five horizontal units to one vertical unit). Cut benches to a firm compact soil condition. The lower bench shall be at least 10 feet wide and all other benches at least 6 feet wide. Compact the horizontal portion of each bench before receiving fill as specified herein for compacted natural ground. Bench ground slopes flatter than 20% when considered necessary by the Resident Engineer and the Architect or Soils Engineer.

3.2 SOILS REPORT AND SOILS ENGINEER:

3.2.1 A Soils Investigation Report has been prepared for this project for the Owner and is on file at the Office of the Resident Engineer and the Architect. The information is not intended as representations or warranties of the continuity of such conditions between soil borings. The Owner or the Resident Engineer and the Architect will not be responsible for interpretations or conclusions drawn therefrom. The data are made available for the convenience of the Contractor.

3.2.2 Additional test borings and other exploratory operations may be made by Contractor at no cost to the Owner.

3.2.3 Recompact all loose soils as specified herein.

3.2.4 The existing soils, as specified herein, on the site may be reused for compacted fill as directed in the soils report and as approved and directed by the Owner's Soils Engineer.

3.3 EXCAVATION AND BACKFILL:

3.3.1 Excavate to the elevations and the form indicated with finish grades and slopes cut true and straight.

3.3.2 Use care in making cuts so that backfill will not be required in cut areas. Fill

excavation taken to greater depth than required with approved material placed to a minimum relative compaction of **90%** in layers not more than **6 inches** deep when completed. Do not use material of a perishable, spongy, or otherwise improper nature.

3.3.3 Repair work due to over or careless excavation, including additional depth of foundations if required to penetrate backfill due to excessive cuts. Provide pumping or draining necessary to keep excavated areas free from standing water.

3.3.4 Remove rock encountered in excavating. If blasting is necessary, it shall be done in accordance with the provisions of the state and local codes and ordinances, by skilled operators. The Contractor shall assume the sole responsibility of this operation and shall hold the Owner and the Resident Engineer and the Architect free of damages resulting therefrom.

3.3.5 Maximum allowable rock and clod size in the upper 6 inches of earth fill or cut subgrade shall conform to the following:

3.3.5.1 Under Building Slabs:	MAXIMUM SIZE
(1) Subgrade with slab over:	2 inches
(2) Subgrade with sand or rock base course over:	6 inches
3.3.5.2 Under Concrete Flatwork (Walks, Drives, etc.)	
(1) Subgrade with flatwork over:	2 inches
(2) Subgrade with 4" sand base course:	6 inches
3.3.5.3 Under Asphaltic Paving:	
(1) Subgrade with paving over:	2 inches
(2) Subgrade with 4 inches minimum aggregate base:	6 inches
3.3.5.4 Under All Other Areas:	6 inches

3.3.6 Rocks over maximum allowable size (up to 12 inch greatest dimension) may be used in fills 3 feet or deeper below the subgrade as directed by the Resident Engineer and the Architect, except in building pad areas.

3.4 COMPACTED FILLS:

3.4.1 Construct fills under the supervision of the Soils Engineer.

3.4.2 Fill materials shall be "Select Fill Material" as specified herein, or imported fill if required.

3.4.3 Place and compact fill material and base fill under slabs as herein specified in the filled areas and as indicated. Place the fill material in layers which when compacted shall not exceed **6 inches** in thickness. Compact each layer after it has been placed, mixed and spread evenly to a minimum relative compaction noted below as determined by the ASTM D 1557-78.

3.4.3.1 Compact as follows:

Under buildings:	90% %
Under pavement	
(top 12 inch subgrade)	95%
Trenches	90%

3.4.4 Compact surface of fill slopes so that the slopes are stable and there is no excessive loose soil on the slopes.

3.4.5 Compact each layer to the specified density after it has been placed, mixed and spread evenly. Compaction shall be accomplished by sheepsfoot rollers, vibratory rollers, multiple-wheel pneumatic-tired rollers or other types of acceptable compacting equipment. Equipment shall be of such design that it will be able to compact the fill to the specified density. Compaction shall be continuous over the entire area and the equipment shall make sufficient trips to insure that the desired density has been obtained.

3.4.6 When the moisture content of the fill material is above that specified by the Soil Engineer, aerate the fill material by blading, mixing, or other satisfactory method until the moisture content is as specified.

3.5 FINISH GRADING:

3.5.1 Finish upper 6 inches of cut and fill areas with the specified fine grading fill material, including earth banks, and excluding areas scheduled to receive base course materials for subsequent concrete slabs and flatwork or asphaltic concrete paving (however, these areas shall be graded to the specified tolerances) and excluding lawn and turf areas.

3.5.2 Spread, moisten and compact the material to the required subgrade elevations, with a maximum deviation of 0.10 feet above or below a straight line forming a uniform slope between changes in grade.

3.5.3 Finish subgrades shall allow for thickness and slopes of subsequent construction. Grade to provide uniform slope between elevation points or lines, or between such elevations and existing grades.

3.5.4 Existing and proposed cut and fill banks shall be carefully cut and trimmed and left within **6 inches** of slope indicated. For banks to be planted, drag rather than blade, to avoid too smooth a surface. Remove and dispose of loose rock over 1 inch.

3.6 SPREADING OF ON-SITE TOPSOIL:

3.6.1 Soil in all planting areas, except on slopes exceeding 4:1 gradient, shall be ripped and loosened to a depth of **12 inches** below subgrade then spread 4 inches of topsoil disc, scarify and mix into existing soil. Remove debris, foreign matter and stones in excess of one inch in diameter. Drag smooth and water compact. Place remaining topsoil to finish grade. Drag smooth and water compact.

3.6.2 After incorporation of **4 inches** of topsoil and water compaction, spread an additional **4 inches** of on-site topsoil evenly in all areas to be planted, except on slopes exceeding 4:1. After spreading, water compact.

3.6.3 Measure on-site topsoil for thickness when it is fully water compacted and in a settled condition.

3.7 PROTECTION OF WORK:

3.7.1 During construction, properly grade excavated surfaces to provide positive drainage and prevent ponding of water. Control surface water to avoid damage to adjoining properties or to finished work on the site. Take remedial measures to prevent erosion of freshly graded areas and until such time as permanent drainage and erosion control features have been installed.

3.7.2 After completion of grading and the Soil Engineer has finished his observation of the work, no further excavation or filling shall be done except under the observation of the Soil Engineer.

3.8 JOB RECORD DRAWINGS:

3.8.1 Maintain a set of prints and legibly record, in red ink, deviations from the contract drawings. In some cases, it may be necessary to use several prints of the same drawings in order to legibly record all "As-Built" data. The following data shall be recorded on the job record prints, and the accuracy of the data shall be certified by a Surveyor or Civil Engineer registered in the State of California.

3.8.1.1 Pad and height certifications is an anticipated requirement by the City. Contractor shall hire at their expense a licensed surveyor or civil engineer to certify field conditions per the City requirements.

3.8.1.2 Dimensions shall be given from face of permanent buildings or other permanent installation, rather than portables or other temporary locations, which are subject to change.

END OF SECTION 31 22 00

SECTION 31 23 00 - EXCAVATING, BACKFILLING AND COMPACTING

PART 1 - GENERAL

1.1 RELATED DOCUMENTS & DESCRIPTION OF WORK:

The work includes all labor and material necessary to complete all excavating, backfilling and compacting for structures as indicated and specified. The Conditions of the Contract, Soils Report #2231 prepared by Terra Costa Consulting Group and Division 1 apply to this section as if fully repeated herein. Comply with Soils Report if it is more stringent than specified herein.

1.2 RELATED WORK:

1.2.1 Testing and inspection is specified in City documents.
1.2.2 Site grading is specified in Section 31 22 00.

1.3 REFERENCES:

"California Building Code, current edition (CBC)", except as modified hereinafter.

1.4 DEFINITIONS:

1.4.1 Fill: Fill materials placed to backfill excavations.

1.4.2 On-Site Material: Soil material which is imported in from the required excavation on the site.

1.4.3 Imported Material: Soil material which is imported in from off-site areas.

1.4.4 Degree of Compaction: The ratio, expressed as a percentage, of the dry density of the fill material as compacted in the field to the maximum dry density of the same material as determined by ASTM D 1557-91, as applicable.

1.5 QUALITY ASSURANCE:

1.5.1 Full time observations will be made by the Owner's Soil Engineer during the excavating, filling and compacting operations. (City to employ Soil Engineer through the Contractor).

1.5.2 The Soil Engineer will make field density tests in accordance with ASTM D 1556-90 or D 2922-96. When these tests indicate that the density of any layer of fill or portion thereof is below the specified density or not near the optimum moisture content, the particular layer or portions shall be reworked until the specified density and/or moisture content has been obtained.

1.5.3 Required inspection and testing will be paid for by the Owner as specified

1.6 PRE-EXCAVATION MEETING:

Prior to commencing the work of this section, the contractor shall schedule and attend a meeting at the job site to discuss conformance with requirements of the Contract Documents. Request attendance of representatives from the Resident Engineer and the Architect, Contractor, subcontractors, and other parties who are involved.

PART 2 - PRODUCTS

2.1 SELECT MATERIALS:

2.1.1 Materials for Compacted Fill under Structures: Consist of material imported or excavated from the cut areas that, in the opinion of the Owner's Soil Engineer, is suitable for use in compacted fills. The material shall contain no rocks or hard lumps greater than **6 inches** in size and shall contain at least **40%** of material smaller than 1/4 inch in size. Do not use material of a perishable, spongy, or otherwise improper nature.

2.1.2 Select Backfill Material for Utility Trenches: Non expansive soil excavated from the utility trench or site cut areas which in the opinion of the Owner's Soil Engineer is suitable. A minimum of **40%** of the material shall pass a **No. 4 screen**. Rock and clod size shall be limited to **3 inches** maximum diameter for trenches 12 inches or less in width.

2.1.3 Sand for Use Under the Building: Fine sand aggregate meeting the requirements of ASTM C 33-82.

2.1.4 Sand for Use in Utility Trenching: Class A screened fill with a maximum particle size of one half inch, not exceeding 18% and free of expansive materials, debris and organic matter.

PART 3 - EXECUTION

3.1 EXCAVATING:

3.1.1 General: Excavation shall comply with section 300-1 and 300-2 of the standard specifications for Public Works construction and these specifications herein. Excavate to lines, grades and elevations required. Allow space for formwork, waterproofing application, and work of like nature requiring extra side excavation. Notify the Resident Engineer and the Architect two working days in advance of completion of excavation, ready for form work. Excavations shall comply with all state and local regulations as well as the requirements of CAL/OSHA.

3.1.2 Over Excavation:

3.1.2.1 If excavations for foundation work are made deeper than indicated, fill with same concrete as specified for foundation work. If excavations for foundation work are made wider than indicated, form footing work or fill with same concrete as specified for foundation work.

3.1.2.2 If excavations for slabs or flatwork are made deeper than indicated, fill with coarse, fresh-water sand to required levels. Compact near optimum moisture content to a minimum of **95%** density, and **95%** density at asphaltic paving areas.

3.1.2.3 If excavations to greater depths than shown are required by the Owner's Soil Engineer, in order to reach satisfactory soil bearing conditions, additional costs will be paid by the Owner, provided the costs are approved prior to the extra work being done.

3.1.3 Pumping and Draining: Keep excavations free of standing water; pump or drain as required.

3.1.4 Shoring: Provide and maintain such shoring or bracing as required to protect structures and excavations from caving or other earth movement and as required to conform with CAL-OSHA requirements.

3.2 BACKFILLING:

3.2.1 Requirement: Do no backfilling until approval is obtained for each specific location. Notify the Resident Engineer, the Architect, and Soils Engineer one working day in advance of the work.

3.2.2 Placing: Place material in layers not exceeding **6 inches** in compacted thickness. Move equipment over entire surface of each layer, so ruts or pockets are not formed. Obtain specified density before additional layers are placed.

3.2.2.1 Placing and compacting adjacent to walls that have been waterproofed shall be done with care to avoid damaging the waterproofing. Heavy machinery shall not be used closer than 2 feet from such walls. Use mechanical hand tampers for compacting backfill within 2 feet of waterproofed walls.

3.2.3 Backfill Compaction at Structures: Unless otherwise specified, compact fill material while at a moisture content near the optimum moisture content and to a density that is not less than **95%** of the maximum density determined in accordance with ASTM D 1557-91 or other density methods that will obtain equivalent results. Before compaction, moisten or aerate each layer as necessary to provide optimum moisture content.

3.3 FINISH GRADING:

3.3.1 General: Fine grade to bring areas to required lines and grades. The subgrade elevation within the building area for slabs on grade (without a base course) shall be within 0.50 inch along a 10 foot straight edge.

3.3.2 Slope finish grades to drain surface water away from buildings, walks, paving, and other structures a minimum of 1% unless otherwise indicated. Generally, grade with uniform slope between points where elevations are given, or between such points and existing grades.

3.4 COMPLETION REQUIREMENTS:

3.4.1 Clean Up: Leave entire graded portions of the site "rake clean".

3.4.2 Disposal: Pick-up and transport unsuitable, deleterious excess material, and debris to an off-site legal disposal area.

3.5 TRENCHING FOR UTILITIES:

3.5.1 Layout: Carefully layout the route of each underground utility prior to trenching. Review drawings and coordinate with underground work by other trades to avoid conflicts.

3.5.2 Clearances: Take special notice and maintain the required horizontal and vertical depth clearances from structural footings for utility trenches running parallel to footings. Do not violate the area of the footing bearing prism. In the event of conflict, (i.e., the utility cannot be relocated or its depth changed), proceed as directed by the Resident Engineer and the Architect. Lower structural footings to maintain proper clearances for underground utilities trenching without additional cost to the Owner.

3.5.3 Excavation for utilities shall comply with section 306-1.1 of the standard specifications for Public Works construction and these specifications herein. Excavate trenches for utilities (i.e., pipe, conduit, ducts, other utilities) to the required lines, grades and elevations indicated on the drawings and as specified. Hand trim changes in direction and bottoms of trenches. Provide shoring in trenches over 5 feet in depth and also in trenches where unstable soil conditions are encountered. Comply with CAL-OSHA requirements.

3.5.4 Pipe Trench Dimensions: The following requirements are considered minimal unless indicated otherwise in order to provide adequate pipe clearances and bedding. Provide trenches wider than the specified minimums where required to properly install the particular type of piping. In the event utility company regulations, code requirements, or the pipe manufacturer's recommendations differ from these provisions, the most restrictive requirements shall take precedence:

3.5.4.1 Pipe Burial Depths unless otherwise indicated:

Sewer & Drainage:	24" + pipe O.D. + 3" bed
Water (Domestic) PVC:	30" + pipe O.D. + 4" bed
All Other:	24" (30" at planters) + pipe + 4" bed
Water (Irrigation Pressure Piping):	
3" diameter or less:	18" + pipe O.D. + 2" bed
4" diameter or more:	Same as domestic water

Notes:

Finish grade to top of pipe, typical.
O.D.: Outside dimension.

3.5.4.2 Trench Widths:

Sewer & Drainage:	12" + pipe O.D. for 4" to 18" diameter pipe
Water (Domestic):	8" + pipe O.D.

3.5.4.3 Do not run electrical power and communications conduit in a common trench with sewer, drainage, water or gas piping.

3.5.4.4 Additional Provisions for Underground Piping Within Building Areas: Refer to applicable specification sections under Division 15 as indicated.

3.5.4.5 Requirements for Underground Electrical and Communications Conduit, Ducts: Refer to applicable specification sections under Division 16 and details as indicated.

3.6 CLEAN UP:

Pick up and transport unsuitable and deleterious material to an off site legal disposal area.

END OF SECTION 31 23 00

SECTION 31 35 25 - ARTICULATING CONCRETE BLOCK SYSTEM

PART 1 -- GENERAL

1.1 SCOPE OF WORK

The contractor shall furnish all labor, materials, equipment, and incidentals required and perform all operations in connection with the installation of cellular concrete erosion control blocks in accordance with the lines, grades, design and dimensions shown on the Contract Drawings and as specified herein.

1.2 SUBMITTAL

The Contractor shall submit to the Resident Engineer all manufacturers' hydraulic testing and calculations in support of the proposed cellular concrete mat system and geotextile.

The Contractor shall furnish the manufacturer's certificates of compliance for cellular concrete blocks/mats, revetment cable, and any revetment cable fittings and connectors. The Contractor shall also furnish the manufacturer's specifications, literature, shop drawings for the layout of the mats, and any recommendations, if applicable, that are specifically related to the project.

Alternative materials may be considered. Such materials must be pre-approved in writing by the Resident Engineer prior to bid date. Alternative material packages must be submitted to the Resident Engineer a minimum of fifteen (15) days prior to bid date. Submittal packages must include, as a minimum, the following:

1.2.1 Full-scale laboratory testing performed by the submitting manufacturer and associated engineered calculations quantifying the hydraulic capacity of the proposed cellular concrete mat system in similar conditions to the specific project.

1.2.2 A list of 5 comparable projects, in terms of size and applications, in the United States, where the results of the specific alternate revetment system use can be verified after a minimum of five (5) year of service life.

PART 2 - PRODUCT

2.1 GENERAL

All cellular concrete mats shall be prefabricated as an assembly of concrete blocks, with specific hydraulic capacities, laced with revetment cables. Cellular concrete mats may be assembled on-site by hand-placing the individual units either with or without subsequent insertion of cables.

Individual units in the system shall be staggered and interlocked for enhanced stability. The mats shall be constructed of open and/or closed cell units as shown on the contract drawings. The open cell units have two (2) vertical openings of rectangular cross section with sufficient wall thickness to resist shipping and installation. Parallel strands of cable shall extend through two (2) cable ducts in each

block allowing for longitudinal binding of the units within a mat. Each row of units shall be laterally offset by one-half of a block width from the adjacent row so that any given block is cabled to four other blocks (two in the row above and two in the row below).

Each block shall incorporate interlocking surfaces that minimize lateral displacement of the blocks within the mats when they are lifted by the longitudinal revetment cables. The interlocking surfaces must not protrude beyond the perimeter of the blocks to such an extent that they reduce the flexibility or articulation capability of the cellular mats or become damaged or broken when the mats are lifted during shipment or placement. Once the mats are in place, the interlocking surfaces shall minimize the lateral displacement of the blocks even if the cables should become damaged or removed. The mats must be able to flex a minimum of 18° between any given row or column of blocks in the uplift direction and a minimum of 45° in the downward direction.

The cables inserted into the mats shall form lifting loops at one end of the mat with the corresponding cable ends spliced together to form a lifting loop at the other end of the mat. The Resident Engineer shall approve appropriate sleeves for use in order to splice the lifting loop. The cables shall be inserted after sufficient time has been allowed for the concrete to complete the curing process.

The cellular concrete mats shall be placed on a filter fabric as specified herein. Under no circumstances shall the filter fabric be affixed (i.e. chemically bonded to the blocks) to the mattress in a manner in which would jeopardize the functionality of the filter fabric. Specifically, the filter fabric shall be independent of the block system.

2.2 CELLULAR CONCRETE BLOCKS

2.2.1 Scope

This specification covers erosion control mats used in revetments for soil stabilization.

Note 1 - Concrete units covered by this specification are made from lightweight or normal weight aggregates, or both.

Note 2 - The values stated in U.S. customary units are to be regarded as the standard.

2.2.2 Materials

2.2.2.1 Cementitious Materials - Materials shall conform to the following applicable ASTM specifications:

A. Portland Cements - Specification C 150, for Portland Cement.

B. Blended Cements - Specification C 595, for Blended Hydraulic Cements.

C. Hydrated Lime Types - Specification C 207, for Hydrated Lime Types.

D. Pozzolans - Specification C 618, for Fly Ash and Raw or Calcined Natural Pozzolans for use in Portland Cement Concrete.

2.2.2.2 Aggregates shall conform to the following ASTM specifications, except that grading requirements shall not necessarily apply:

A. Normal Weight - Specification C 33, for Concrete Aggregates.

2.2.3 Casting

2.2.3.1 The concrete units shall be produced by a dry cast method. The dry cast units obtain strength in a shorter duration as well as an increase in the durability and overall quality of product.

2.2.4 Physical Requirements

2.2.4.1 At the time of delivery to the work site, the units shall conform to the physical requirements prescribed in Table 2 listed below.

TABLE 2. PHYSICAL REQUIREMENTS

Compressive Strength Net Area Min. p.s.i (mPa)		**Water Absorption Max. lb/ft^3 (kg/m^3)**	
Avg. of 3 units	Individual Unit	Avg. of 3 units	Individual Unit
4,000 (27.6)	3,500 (24.1)	9.1 (160)	11.7 (192)

2.2.4.2 Units will be sampled and tested in accordance with ASTM D 6684-04, Standard Specification for Materials and Manufacture of Articulating Concrete Block (ACB) Revetment Systems.

2.2.4.3 Units shall be sampled and tested in accordance with ASTM D 6684-04, Standard Specification for Materials and Manufacture of Articulating Concrete Block (ACB) Revetment Systems.

2.2.5 Visual Inspection

2.2.5.1 All units shall be sound and free of defects that would interfere with either the proper placement of the unit or impair the performance of the system. Surface cracks incidental to the usual methods of manufacture, or surface chipping resulting from customary methods of handling in shipment and delivery, shall not be deemed grounds for rejection.

2.2.5.2 Cracks exceeding 0.25 inches (.635 cm) in width and/or 1.0 inch (2.54 cm) in depth shall be deemed grounds for rejection.

2.2.5.3 Chipping resulting in a weight loss exceeding 10% of the average weight of a concrete unit shall be deemed grounds for rejection.

2.2.5.4 Blocks rejected prior to delivery from the point of manufacture shall be replaced at the manufacturer's expense. Blocks rejected at the job site shall be repaired with structural grout or replaced at the expense of the contractor.

2.2.6 Sampling and Testing

2.2.6.1 The purchaser or their authorized representative shall be accorded proper access to facilities to inspect and sample the units at the place of manufacture from lots ready for delivery.

2.2.6.2 Field installation procedures shall comply with the procedures utilized during the hydraulic testing procedures of the recommended system. All system restraints and ancillary components (such as synthetic drainage mediums) shall be employed as they were during testing. For example, if the hydraulic testing installations utilize a drainage layer then the field installation must utilize a drainage layer; an installation without the drainage layer would not be permitted.

2.2.6.3 The theoretical force-balance equation used for performance extrapolation tends for conservative performance values of thicker concrete units based on actual hydraulic testing of thinner units. When establishing performance values of thinner units based on actual hydraulic testing of thicker units, there is a tendency to overestimate the hydraulic performance values of the thinner units. Therefore, all performance extrapolation must be based on actual hydraulic testing of a thinner unit then relating the values to the thicker units in the same "family" of blocks.

2.2.6.4 Additional testing, other than that provided by the manufacturer, shall be borne by the purchaser.

2.2.7 Manufacturer

Cellular concrete blocks shall be ARMORFLEX® as manufactured and sold by:

ARMORTEC, A Contech Company
9025 Centre Pointe Dr., Suite 400
West Chester, OH 45269
Phone: 1-800-645-7000
Fax: 1-513-645-7993

or approved equal..

The cellular concrete blocks shall have the following nominal characteristics:

TABLE 2. STANDARD SIZES OF ARMORFLEX® BLOCKS

CLASS	TYPE	BLOCK WEIGHT		BLOCK SIZE			OPEN AREA %
		Lbs	Lbs./Sq.ft.	Length inches	Width inches	Height inches	
30S	Open	31-36	32-37	13.0	11.6	4.75	20
50S	Open	45-52	45-53	13.0	11.6	6.0	20
45S	Closed	39-45	40-45	13.0	11.6	4.75	10
55S	Closed	51-61	54-62	13.0	11.6	6.0	10
40	Open	59-64	35-40	17.4	15.5	4.75	20
50	Open	76-82	43-46	17.4	15.5	6.0	20
70	Open	115-124	65-71	17.4	15.5	8.5	20
45	Closed	72-78	41-44	17.4	15.5	4.75	10
55	Closed	91-100	53-57	17.4	15.5	6.0	10
75	Closed	112-121	63-68	17.4	15.5	7.5	10
85	Closed	136-147	76-84	17.4	15.5	8.5	10
40L	Open	97-118	42-46	17.4	23.6	4.75	20
70L	Open	174-189	67-74	17.4	23.6	8.5	20
45L	Closed	108-118	42-46	17.4	23.6	4.75	10
85L	Closed	208-225	80-87	17.4	23.6	8.5	10

*Block height may vary based on local manufacture's capabilities.
**Block weight may vary based uopon the specific gravity of local available aggregate material

2.3 REVETMENT CABLE AND FITTINGS

Option 1. Polyester Revetment Cable and Fittings. Revetment cable shall be constructed of high tenacity, low elongating, and continuous filament polyester fibers. Cable shall consist of a core construction comprised of parallel fibers contained within an outer jacket or cover. The weight of the parallel core shall be between 65% to 70% of the total weight of the cable. The revetment cable shall have the following physical properties:

POLYESTER CABLE				
Nominal Cable Dia.	Approx. Ave. Strength		Weight per Length	
(in.)	(Lbs)	(kN)	(Lbs)/100ft	(kg/m)
1/4	3,000	13.3	2.2	0.03
5/16	7,000	31.1	4.4	0.07
3/8	10,000	44.5	5.5	0.08
1/2	15,000	66.7	9.7	0.14

Elongation requirements specified below are based upon stabilized new, dry cable. Stabilization refers to a process in which the cable is cycled fifty (50) times between a load corresponding to $200D^2$ and a load equal to 10%, 20% or 30% of the cable's approximate average breaking strength. Relevant elongation values are as shown in the table below. The tolerance on these values is + 5%.

ELASTIC ELONGATION		
at Percentage of Break Strength		
10%	20%	30%
0.6	1.4	2.2

The revetment cable shall exhibit resistance to most concentrated acids, alkalis and solvents. Cable shall be impervious to rot, mildew and degradation associated with marine organisms. The materials used in the construction of the cable shall not be affected by continuous immersion in fresh or salt water.

Selection of cable and fittings shall be made in a manner that insures a safe design factor for mats being lifted from both ends, thereby forming a catenary. Consideration shall be taken for the bending of the cables around hooks or pins during lifting. Revetment cable splicing fittings shall be selected so that the resultant splice shall provide a minimum of 60% of the minimum rated cable strength. Fittings such as sleeves and stops shall be aluminum and washers shall be galvanized steel unless otherwise shown on the Contract Drawings.

2.4 ANCHORS

Where permanent anchoring is required, e.g. hanging mats on steep slopes without toe construction, the cables (polyester or steel) shall be attached to the anchoring system as indicated on the Contract Drawings. The design and layout of the anchored system shall be design by a separate entity other than Armortec.

2.5 FILTER FABRIC

The geotextile filter shall meet the minimum physical requirements listed in Table No. 3 of these Specifications. Consultation with the manufacturer is recommended.

The geotextile must be permitted to function properly by allowing relief of hydrostatic pressure; therefore fine soil particles shall not be allowed to clog the filter fabric.

The geotextile fiber shall consist of a long-chain synthetic polymer composed of at least 85 percent by weight of propylene, ethylene, ester, or amide, and shall contain stabilizers and/or inhibitors added to the base plastic, if necessary, to make the filaments resistant to deterioration due to ultraviolet and heat exposure. The edges of the geotextile shall be finished to prevent the outer fiber from pulling away from the geotextile.

The Contractor shall furnish the Resident Engineer, in duplicate, manufacturer's certified test results showing actual test values obtained when the physical properties are tested for compliance with the specifications.

During all periods of shipment and storage, the filter fabric shall be protected from direct sunlight, ultraviolet rays and temperatures greater than 140 degrees Fahrenheit. To the extent possible, the fabric shall be maintained wrapped in its protective covering. The geotextile shall not be exposed to sunlight, ultraviolet rays until the installation process begins.

TABLE 3. PHYSICAL REQUIREMENTS

Physical Property	Test Procedure	Minimum Value
Grab Tensile Strength (Unaged Geotextile)	ASTM D4632	200 Lbs. (in any principal direction)
Breaking Elongation (Unaged Geotextile)	ASTM D4632	50% max. (in any principal direction)
Burst Strength	ASTM D3786	400 p.s.i
Puncture Strength	ASTM D4833	115 lbs.
A.O.S., U.S. Std. Sieve	ASTM D4751	see Design Manual
% Open Area	CWO-22125-86	See Design Manual
Permittivity	ASTM D4491	See Design Manual

Final acceptance of the filtration geotextile by the Resident Engineer shall be dependent upon the geotextile performance when tested in accordance with ASTM D5101, Standard Test Method for Measuring the Soil-Geotextile System Clogging by the Gradient Ratio test or the Hydraulic Conductivity Ratio test. Soil characteristics such as grain size distribution and plasticity shall be determined for every 200,000 square feet of geotextile installed or for each source of borrow material used during construction. Significant differences in soil characteristics shall require further performance testing by either the Gradient Ratio or the Hydraulic Conductivity Ratio tests at the discretion of the Resident Engineer. The locations for which the material to be tested is extracted shall be approved by the Resident Engineer. The Contractor shall provide the site-specific soil and modified proctor curves for the site-soil, at his own expense, to the manufacturer. Also, the contractor shall be responsible for the performance of the test by a certified independent laboratory experienced in performing such test. The test shall be performed under the actual field soil conditions or as otherwise required by the Resident Engineer.

At the time of installation, the filter fabric shall be rejected if it has been removed from its protective cover for over 72 hours or has defects, tears, punctures, flow deterioration, or damage incurred during manufacture, transportation or storage. With the acceptance of the Resident Engineer, placing a filter fabric patch over the damaged area prior to placing the mats shall repair a torn or punctured section of

fabric. The patch shall be large enough to overlap a minimum of three (3) feet in all directions.
In the event pre-assembled panels of fabric are required, the panels of filter fabric shall be sewn together at the manufacturer or another approved location.

2.6. SIZE OF CELLULAR CONCRETE MATS

General. The cellular concrete blocks, cables and fittings shall be fabricated at the manufacturer or another approved location into mats with a width of up to eight (8) feet and a length up to forty (40) feet, which is approved by the Resident Engineer.

Mat Length: The cellular concrete mats shall have the ability for fabrication in various lengths, widths, and in combinations of length and/or widths. Special mats are a combination of two opposing dimensions either in the longitudinal or transverse direction of the mats. The special mats are available in various dimensions that allow for a custom fit to a site-specific project.

PART 3 - FOUNDATION PREPARATION, GEOTEXTILE AND MAT PLACEMENT

3.1 GENERAL. All subgrade preparation should be performed in accordance with ASTM D6884-03, Standard Practice for Installation of Articulating Concrete Block (ACB) Revetment Systems.

Grading. The slope shall be graded to a smooth plane surface to ensure that intimate contact is achieved between the slope face and the geotextile (filter fabric), and between the geotextile and the entire bottom surface of the cellular concrete blocks. All slope deformities, roots, grade stakes, and stones which project normal to the local slope face must be re-graded or removed. No holes, "pockmarks", slope board teeth marks, footprints, or other voids greater than 0.5 inch in depth normal to the local slope face shall be permitted. No grooves or depressions greater than 0.5 inches in depth normal to the local slope face with a dimension exceeding 1.0 foot in any direction shall be permitted. Where such areas are evident, they shall be brought to grade by placing compacted homogeneous material. The slope and slope face shall be uniformly compacted, and the depth of layers, homogeneity of soil, and amount of compaction shall be as required by the Engineer.

Excavation and preparation for anchor trenches, flanking trenches, and toe trenches or aprons shall be done in accordance to the lines, grades and dimensions shown in the Contract Drawings. The anchor trench hinge-point at the top of the slope shall be uniformly graded so that no dips or bumps greater than 0.5 inches over or under the local grade occur. The width of the anchor trench hinge-point shall also be graded uniformly to assure intimate contact between all cellular concrete blocks and the underlying grade at the hinge-point.

Inspection. Immediately prior to placing the filter fabric and cellular concrete blocks, the prepared subgrade shall be inspected by the Resident Engineer as well as the owner's representative. No fabric or blocks shall be placed thereon until that area has been approved by each of these parties.

3.2 PLACEMENT OF GEOTEXTILE FILTER FABRIC

General.
All placement and preparation should be performed in accordance with ASTM D6884-03, Standard Practice for Installation of Articulating Concrete Block (ACB) Revetment Systems.

Filter Fabric, or filtration geotextile, as specified elsewhere, will be placed within the limits of ACBs shown on the Contract Drawings.

Placement. The filtration geotextile will be placed directly on the prepared area, in intimate contact with the subgrade, and free of folds or wrinkles. The geotextile will not be walked on or disturbed when the result is a loss of intimate contact between the cellular concrete block and the geotextile or between the geotextile and the subgrade. The geotextile filter fabric will be placed so that the upstream strip of fabric overlaps the downstream strip. The longitudinal and transverse joints will be overlapped at least two (2) feet. The geotextile will extend at least one (1) foot beyond the top and bottom revetment termination points, or as required by the Resident Engineer. If cellular concrete blocks are assembled and placed as large mattresses, the top lap edge of the geotextile should not occur in the same location as a space between cellular concrete mats unless the space is concrete filled.

3.3 PLACEMENT OF CELLULAR CONCRETE BLOCKS/MATS

General. ACB placement and preparation should be perform` with ASTM D6884-03, Standard Practice for Installation of Articulating Concrete Block (ACB) Revetment Systems.

Cellular concrete block/mats, as specified in Part 2:A of these Specifications, will be constructed within the specified lines and grades shown on the Contract Drawings.

Placement. The cellular concrete blocks will be prepared subgrade in such a manner as to produce a smooth plane surface in intimate contact. No individual block within the plane of placed cellular concrete blocks will protrude more than one-half inch or as otherwise specified by the Resident Engineer. Cellular concrete blocks should be flush and develop intimate contact with the subgrade section, as approved by the Resident Engineer.

Proposed hand placing only is to be used in limited areas, specifically identified by the Resident Engineer.

If assembled and placed as large mattresses, the cellular concrete mats will be attached to a spreader bar or other approved device to aid in the lifting and placing of the mats in their proper position by the use of a crane or other approved equipment. The equipment used should have adequate capacity to place the mats without bumping, dragging, tearing or otherwise damaging the underlying fabric. The mats will be placed side-by-side and/or end-to-end, so that the mats abut each other. Mat seams or openings between mats greater than two (2) inches will be backfilled with 4000 p.s.i. non-shrink grout, concrete or other material approved by the Resident Engineer. Whether placed by hand or in large mattresses, distinct changes in grade

that results in a discontinuous revetment surface in the direction of flow will require backfill at the grade change location so as to produce a continuous surface.

Termination trenches and side trenches will be backfilled and compacted flush with the top of the blocks. The integrity of the trench backfill must be maintained so as to ensure a surface that is flush with the top surface of the cellular concrete blocks for its entire service life. Toe trenches will be backfilled as shown on the Contract Drawings. Backfilling and compaction of trenches will be completed in a timely fashion. No more than 500 linear feet of placed cellular concrete blocks with non-completed anchor and/or toe trenches will be permitted at any time.

Finishing. The cells or openings in the cellular concrete blocks will be backfilled and compacted with suitable material, as specified by the Resident Engineer. Backfilling and compaction will be completed in a timely manner so that no more than 500 feet of exposed mats exist at any time.

Finishing requirements is explicitly at the discretion of the Resident Engineer and Engineer of Record.

Consultation. The manufacturer of the cellular concrete blocks/mats will provide design and construction advice during the design and initial installation phases of the project as necessary, by the discretion of the Resident Engineer.

END OF SECTION 31 35 25

SECTION 32 12 00 - ASPHALTIC CONCRETE PAVING

PART 1 - GENERAL

1.1 This section covers the furnishing and installing of aggregate base, asphalt concrete surfacing and seal coat work complete in place, as shown and noted on the drawings. The Conditions of the Contract, Soils Report Job #2231 prepared by Terracosta Consulting Group, Inc. and Division 1 apply to this section as fully as if repeated herein. Comply with Soils Report if it is more stringent than specified herein. (Pavement recommendations are provided in the soils report herein.)

1.2 GOVERNING STANDARD:

1.2.1 All work included in this section shall conform to the applicable requirements of the current Standard Specifications for Public Works Construction, including Regional Standard Special Provisions, and **City of San Diego** Standard Specifications Special Provisions for Improvement of Subdivision Streets, and Standard Drawings, hereinafter referred to as the Standard Specifications.

1.3 SUBMITTALS:

1.3.1 Submittal procedures and quantities are specified in Section 01 33 00.

1.3.2 Product Data: Submit job mix design for asphalt concrete mixture for review. Submit certificates from the asphaltic concrete producer indicating compliance with the mix design and these specifications.

1.4 PROTECTION:

Concrete walks, curbs and bases, and other improvements adjacent to the operations shall be protected to ensure that no asphalt will appear on exposed surfaces. Contractor shall be responsible for damage caused by his employees or equipment and shall make necessary repairs. Building, curb, walk, and other surfaces shall be covered with paper or other protection, where required.

PART 2 - PRODUCTS

2.1 ASPHALT CONCRETE SURFACING:

2.1.1 Asphalt concrete surfacing for the wearing surface shall be furnished from a commercial asphalt central mixing plant and shall be as specified on the recommendations of the Soils Report and/or Civil drawings whichever is more stringent and shall conform to the following minimum requirements:

2.1.1.1 Prime Coat: Liquid asphalt shall be medium curing (MC-70) in conformance with Section **203-2** of the "Standard Specifications".

2.1.1.2 Tack Coat: Diluted SS-1 or SS-1h emulsion or undiluted RS-1 emulsion, or RC-70 liquid asphalt. Tack coat shall conform to the "Standard Specifications" Section **203-2** for liquid asphalt and Section **203-3** for emulsion.

2.1.1.3 Paving Asphalt: Steam-refined, penetration grade AR-4000, in accordance with Section **203-6** of the "Standard Specifications".

2.1.1.4 Aggregate: Coarse and fine aggregate shall be clean and free from decomposed materials, vegetable matter, and other deleterious substances. Aggregate shall be Class B as listed in Section **203-6.22**, of the "Standard Specifications".

2.2 BASE COURSE MATERIAL:

Base material shall be untreated crushed aggregate base as specified in Section **220-2** of the "Standard Specifications" and in the Soils Report.

2.3 SEAL COAT MATERIALS:

2.3.1 Asphaltic Emulsion shall be grade SS-1 or SS-1h in accordance with Section **203-5** of the "Standard Specifications".

2.3.2 Sand shall be clean and dry.

2.4 SOIL STERILANT:

Chemical sterilant shall be a borate chlorate sterilant containing not less than 25% sodium chlorate and 75% disodium octaborate and shall be mixed thoroughly with water at the rate of 1 to 2 pounds of sterilant per gallon of water. Furnish a written guarantee against weed and plant growth through paving for a period of 2 years.

PART 3 - EXECUTION

3.1 STERILANT APPLICATION:

3.1.1 Sterilant-water mixture (1 to 2 pounds of sterilant per gallon of water) shall be applied so that the equivalent of 3 to 4 pounds of dry sterilant is applied per 100 square feet of paving.

3.1.2 Take precautions necessary to prevent contamination of adjacent soil areas with sterilant and for the protection of personnel. Keep soil sterilant out of drip area of shrub and trees.

3.1.3 Upon completion of the weed control treatment, and as a condition for final acceptance, furnish a written certificate stating the brand name of the sterilant and the manufacturer, and that the sterilant used had a least the minimum required concentration, and that the rate and method of application complied in every respect with the conditions and standards contained herein.

3.2 APPLICATION OF BASE COURSE:

3.2.1 Base course shall be minimum uniform thickness after compaction as indicated in the Soils Report.

3.2.2 Base course shall be applied over finished subgrade and compacted in conformity with Section **301-2** of the "Standard Specifications". Compacting equipment shall be suitable and adequate for the size of the installation and capable of achieving the compaction specified.

3.2.3 Relative compaction of each layer of compacted base material shall be not less than **95%** of that determined in accordance with Section **301-1.3** of the Standard Specifications.

3.2.4 Thickness of finished base course shall not vary more than 0.05 foot from the planned thickness at any point. Base which does not conform to the above requirements shall be reshaped or reworked, watered, and thoroughly recompacted to conform to the specified requirements.

3.2.5 The surface of the finished aggregate base at any point shall not vary more than 0.05 foot above or below the theoretical grade.

3.3 PLACING ASPHALT CONCRETE SURFACING:

3.3.1 Areas to be paved shall be covered with a layer of hot asphalt concrete surfacing not less than the thickness indicated in the Soils Report, after completion.

3.3.2 Paving material shall be delivered, laid, rolled, and finished in conformity with Section **302-5** of the "Standard Specifications". Spreading and compacting equipment shall be suitable and adequate size for the installation.

3.3.3 Finish paving shall conform to slopes, lines, and finish grades, shown and noted on the drawings, and shall drain properly with a 1/4" per foot slope minimum. Where adjacent surfaces are intended to be flush (as at public sidewalks and at existing paving), they shall conform smoothly at all points.

3.3.4 Finish paving shall conform to finish elevations within plus or minus 0.01 of a foot and shall be level to within plus or minus 1/8" in 10'-0" when measured with a 10'-0" straight edge in any direction.

3.3.5 After completion of paving work, paving shall be flooded with water, and resulting "ponds" shall be ringed with chalk. Such hollows shall be corrected with addition of asphalt concrete and re-rolling until paving is completely level and free from hollows and high spots.

3.4 SEAL COAT:

Not less than two weeks after completion of paving, apply seal coat of surface emulsion over the entire area, in accordance with Section **302-4.3.2** of the Standard Specification.

3.5 PROTECTION OF PAVEMENT:

The pavement shall not be used for vehicular traffic of any kind until pavement has cooled sufficiently after final rolling.

END OF SECTION 32 12 00

SECTION 32 17 23 - PAVEMENT MARKINGS

PART 1 - GENERAL

1.1 RELATED DOCUMENTS AND DESCRIPTION OF WORK:

The work includes furnishing materials and painting traffic markings on pavement as indicated and specified herein. The Conditions of the Contract and Division 1 apply to this section as fully as if repeated herein.

PART 2 - PRODUCTS

2.1 MATERIALS:

2.1.1 Pavement Marking Paint: Vinyl acrylic type for use on asphaltic concrete and portland cement concrete, colors as indicated, specified herein. Approved products, or equal approved may be submitted in accordance with the specifications. .

502 Vinyl Traffic Paint; Frazee Paint
160 Vinyl Traffic Paint; Sinclair Paint
Traffic Paint W-801; Dunn-Edwards Corp.

2.1.2 Thinners: As recommended by the paint manufacturer.

PART 3 - EXECUTION

3.1 APPLICATION:

3.1.1 Apply stripes and other markings on pavement, as indicated, with the use of cutout patterns and templates. Apply stripes and markings with sharp and accurate straight lines, with no fuzziness or waviness at edges of lines.

3.1.2 At completion, touch up stripes and markings which are not clear and distinct or which are not uniform in color.

END OF SECTION 32 17 23

SECTION 33 10 00 - WATER DISTRIBUTION SYSTEM

PART 1 - GENERAL

1.1 RELATED DOCUMENTS:

Documents affecting work of this Section include, but are not necessarily limited to, General Conditions, Supplementary Conditions, and Sections in Division 1 of these Specifications.

1.2 DESCRIPTION/SUMMARY:

1.2.1 Work Included: The work includes, but is not necessarily limited to, furnishing all materials, labor, equipment and transportation to provide domestic and fire water service complete as indicated and as specified herein.

1.2.2 Related Work Specified Elsewhere: Coordinate work of this section with work of other sections to properly execute the work and maintain satisfactory progress of work of other sections including:

1.2.2.1 Earthwork is specified in Section 31 22 00.

1.2.2.2 Trenching for utilities is specified in Section 31 23 00.

1.3 REFERENCES:

1.3.1 Standard specifications for Public Works Construction (Green Book), current edition including Regional Supplemental Amendments, and City of San Diego Supplemental Amendments and Standard Drawings, as referenced herein: "Standard Specifications."

1.3.2 San Diego Area Regional Standard Drawings, current edition, and City of San Diego Standard Drawings, current edition, herein referred to as "Standard Drawings".

1.3.3 NFPA Compliance: Install fire water systems in accordance with NFPA 24 "Standard for the Installation of Private Fire Service Mains and Their Appurtenances".

1.4 REQUIREMENTS OF REGULATORY AGENCIES:

1.4.1 For work done in public right-of-way, and connections to existing lines, meters, etc., per requirements of the City of San Diego Water Utilities Department.

1.4.2 Comply with the State of California, Department of Health Services, regarding the separation of water and sewer lines.

1.5 SUBMITTALS:

1.5.1 Product Data: Submit manufacturer's technical product data and installation instructions for domestic and fire water system materials and products.

1.5.1.1 Shop Drawings: Submit shop drawings for domestic and fire water systems, showing piping, materials, size, locations, and elevations.

1.5.2 Record Drawings: At project closeout, submit record drawings of installed domestic and fire water system piping and products, in accordance with requirements of Division 1.

1.5.3 Maintenance Data: Submit maintenance data and parts lists for domestic and fire water system materials and products. Include this data, product data, shop drawings, and record drawings in maintenance manual; in accordance with requirements of Division 1.

1.5.4 Test Reports: Submit copies of structural integrity, leakage, and performance test as specified, unless otherwise directed.

1.6 PRODUCT HANDLING:

1.6.1 Protection:

1.6.1.1 Deliver, store and handle all products in a manner to prevent damage and deterioration.

1.6.1.2 Use all means necessary to protect the installed work and materials of all other trades.

1.6.2 Replacements: In the event of damage, immediately make all repairs and replacements necessary to the approval of the Resident Engineer and the Architect and at no additional cost to the Owner.

1.6.3 Storage: Contractor shall provide proper storage facilities during the progress of work.

1.7 SITE CONDITIONS:

1.7.1 The Contractor shall verify drawing dimensions with actual field conditions prior to starting work. Inspect related work and adjacent features and report to the Resident Engineer and the Architect all conditions which prevent proper execution of this work.

1.7.2 The drawings are schematic. All deviations from drawings required to make this conform to the site conditions, and to the work of others, shall be marked as necessary or directed.

1.7.3 Accuracy of Data: The data given herein and on the drawings are based on available information, and the Contractor is responsible for verification of the accuracy of all data, including verification of locations and elevations of all existing improvements within the limits of and to be met by, the work of their contract. The Schematic Design specifications and drawings are for the assistance and guidance of the Contractor.

1.8 PRELIMINARY OPERATION:

The Resident Engineer and the Architect reserves the right to operate any system or equipment prior to final completion and acceptance of the work. Such preliminary operation shall not be construed as an acceptance of any work.

PART 2 - PRODUCTS

2.1 IDENTIFICATION MARKERS:

2.1.1 Underground-Type Plastic Line Marker: Manufacturer's standard permanent, bright-colored, continuous-printed plastic tape, intended for direct-burial service; not less than 6" wide x 4 mils thick. Provide blue tape with black printing reading "CAUTION WATER LINE BURIED BELOW".

2.2 PIPE AND PIPE FITTINGS:

2.2.1 General: Provide piping materials and factory-fabricated piping products of sizes, types, pressure ratings, temperature ratings, and capacities as indicated. Where not indicated, provide proper selection as determined by Contractor to comply with installation requirements. Provide materials and products complying with NFPA 24 where applicable. Provide sizes and types matching piping and equipment connections; provide fittings of materials which match pipe materials used. Where more than one type of materials or products are indicated, selection is Contractor's option.

2.2.2 Piping: Provide pipes of one of the following materials, of weight/class indicated. Provide pipe fittings and accessories of same material and weight/class as pipes, with joining method as indicated.

2.2.3 Polyvinyl Chloride (PVC) Pipe:

2.2.3.1 Pipe three (3) inches and less in diameter shall be polyvinyl chloride 1120, SDR26, or polyvinyl chloride pipe, Schedule 80, in conformance with ASTM standards D1784, D1785, D2241, D2665 and shall be NSF approved. Fittings shall be socket solvent weld type meeting the requirements of ASTM D 2465. The welding solvent shall meet the requirements of ASTM D 2564.

2.2.3.2 Polyvinyl chloride pipe 4-inches through 12-inches in diameter shall meet the requirements of AWWA C900. Pipe shall be class 200 or 150 and have an SDR rating of 14 or 18 as indicated. Pipe shall have bell and spigot with rubber sealing ring.

2.2.3.3 Fittings for pipe larger than three (3) inches in diameter shall be cast iron, class 250, and shall comply with requirements of AWWA Specification C-110. Fittings installed underground shall be coated with a 30 mil liquid epoxy coating system.

2.2.3.4 Interior of all fittings shall be cement mortar lined in conformance with AWWA Specification C-104.

2.2.3.5 Pipe to fitting connections shall be with mechanical joints in conformance with AWWA C110 and C111. Push-on joints and solvent fittings are not acceptable.

2.2.4 Ductile-Iron Pipe:

2.2.4.1 Ductile-iron pipe shall be manufactured in conformance with AWWA C150 and C151.

2.2.4.2 All ductile-iron pipe shall be thickness Class 50 for plain end pipe and thickness Class 53 for flanged spools unless indicated otherwise.

2.2.4.3 All ductile-iron pipe shall be cement-mortar lined in conformance with AWWA C104.

2.2.4.4 Unless otherwise called out on the plans, mechanical or compact body type joint shall be used as allowed by the City of San Diego Water Utilities Department. The joint dimensions and gasket shall be as specified in AWWA C110 and C111.

2.2.4.5 Flanges for ductile-iron pipe shall be the "screwed-on" type in conformance with AWWA C115.

2.2.4.6 Ductile iron pipe shall be coated with a 30 mil liquid epoxy coating system.

2.2.5 Ductile-Iron Fittings:

2.2.5.1 Ductile-iron fittings shall be manufactured in conformance with AWWA C110.

2.2.5.2 All fittings shall be cement-mortar lined in conformance with AWWA C104.

2.2.5.3 All fittings shall be made with compact body or mechanical joints designed for use with the type of pipe to be joined unless noted otherwise.

2.2.5.4 The exterior surfaces shall be coated with a 30 mil liquid epoxy coating system. The coating shall be free from blisters and holes; shall adhere to the metal surface at all temperatures encountered in the field; shall be smooth, not brittle when cold; and shall not become sticky when exposed to the sun. The coating shall be checked by the manufacturer with a suitable electrical holiday detector.

2.2.5.5 Each fitting shall be tested before lining to one and one-half times the working pressure for a duration of 10 seconds. Suitable controls and recording devices shall be provided so that the test pressure and duration may be adequately ascertained. Any fitting that does not withstand the test pressure shall be rejected. The Contractor may be required to notify the Resident Engineer and the Architect in advance of the date, time, and place of inspection and testing of the fittings in order that the Owner may be represented at the test. The Resident Engineer and the Architect may require a certification of compliance to these specifications.

2.2.5.6 The bell ends shall be compatible with the pipe ends so as to provide confinement of the rubber rings and prevent damage to the ends of the pipe.

2.2.5.7 The ring grooves and interior surfaces of the bell shall be smooth and free from ridges, notches, or uneven surfaces.

2.2.5.8 Unless otherwise indicated on the drawings, all fittings with flanged ends shall comply with ANSI B16.1, "Cast Iron Pipe Flanges and Flanged Fittings, Class 125." The gasket surface shall have a serrated finish of approximately 16 serrations per inch, approximately 1/32-inch deep, with serrations in either a concentric or spiral pattern. In addition, all flanges shall meet the following tolerances:

Bolt circle drilling ……1/16 inch
Bolt hole spacing……1/32 inch
Eccentricity of both circle and facing with respect to bore
1/32 inch maximum

2.2.6 Ductile-Iron Pipe Gaskets:

2.2.6.1 Gaskets for flanged joints shall be made of asbestos-composition sheet packing, graphited on both sides, 1/16 inch thick.

2.2.6.2 Fullface type gaskets with pre-punched holes shall be used where both flanges are flat face. Ring gaskets extending to the inner edge of the bolts may be used where a raised face flange is present.

2.2.6.3 Rubber gaskets for push-on joints shall be manufactured in conformance with AWWA C111.

2.2.7 Fire Department Connection: Provide single clapper, 4" x 2-1/2" two-way, Siamese fire department connection. United Brass Works, Model 91, or equivalent 90 degree body is acceptable. Finish shall be as required by the City of San Diego Fire Department.

2.3 VALVES:

2.3.1 Gate Valves: Provide gate valves, UL-listed, 175 psi working pressure for 3" and larger. Provide threaded, flanged, hub, or other end configurations to suit size of valve and piping connection. Provide inside screw type for use with indicator post, iron body bronze mounted, non-rising stem, solid wedge disc.

2.3.1.1 Manufacturers: Subject to compliance with the City of San Diego Water Utilities Department requirements.

2.3.2 Resilient-Seated Gate Valves: Manufacturers: Subject to compliance with governing agency requirements.

2.3.3 Reference Standards: Valves shall conform, as applicable, with the latest editions of the following codes and standards.

AWWA C500	Gate Valves
AWWA C509	Resilient Seated Gate Valves
ASTM B62	Composition Brass or Ounce Metal Castings
ASTM A126 Class B	Gray Iron Castings for Valves
ANSI B16.1	Cast Iron Pipe Flanges
ASTM D429	Tests for Rubber Property- Adhesion to Rigid Substrates

2.3.4 General:

2.3.4.1 Valves shall be installed complete with operating handwheels or levers, extension stems, worm gear operators, operating nuts, and wrenches required for operation.

2.3.4.2 Valves shall have the name of the manufacturer and the size of the valve cast or molded onto the valve body or bonnet or shown on a permanently attached plate.

2.3.4.3 Valves installed underground shall be coated with a 24 mil liquid epoxy coating system and wrapped with three part system petroleum wax tape.

2.3.5 Flanged End: All valves connecting to mains shall be flanged on the main side.

2.3.6 Single Type of Valve: The Contractor shall choose an approved valve and then use it throughout the work of this Section.

2.3.7 Indicator Posts: Provide indicator posts, UL-listed, designed for use with underground gate valves to provide aboveground means for operating valves and indicating position of valves. Provide telescopic barrel type with indicating target, intended for use with gate valves 4" through 14", with operating wrench.

2.3.8 Reduced Pressure Detector Assembly: Provide reduced pressure State of California Department of Health Services, Office of Drinking water approved detector assembly as indicated.

2.3.9 Backflow Preventer Reduced Pressure Principal Assembly: Backflow preventer assembly, where required, shall be installed per requirements of the serving Water Authority. Assembly shall be Reduced Pressure Detector Assembly (RPDA), with bypass and meter as approved by the City of San Diego Water Utilities Department. Any device proposed for installation shall be U.L. listed, A.W.W.A. approved for fire service installations, and approved by the Cross-Connection Institute at the University of Southern California.

2.4 VALVE BOXES:

2.4.1 Materials:

2.4.1.1 Valve well shall be per Standard Drawing W-12B.

2.4.1.2 Design cast-iron cap to rest within a frame on a cast-in-place concrete ring surrounding the valve extension pipe; size the tapered skirt of the cap for a close fit inside the upper sleeve portion of the valve box. Caps for the domestic and fire water system shall be per Standard Drawing W-12A.

2.5 PRECAST CONCRETE VAULTS:

2.5.1 Manufacturers:

2.5.1.1 Meter Boxes:
San Diego Precast P6 or equal.

2.5.1.2 Joint Sealing Compound:
Quikseal manufactured by Associated Concrete Products; or equal

2.5.2 Materials: Precast vaults, meter boxes and covers shall be manufactured in a plant especially designed for that purpose and shall conform to Standard Drawing SDW-113 for 1-2 to 2-inch water services.

2.6 FRAMES AND COVERS:

2.6.1 Meter Box Covers:

2.6.1.1 All meter box covers shall be furnished with rectangular reading lids.

2.6.1.2 Concrete meter box covers shall be installed only in non-traffic locations.

2.6.2 Joint Sealing Compound: The joint sealing compound shall be a permanently adhesive flexible plastic material complying in every detail to Federal Specification SS-S-00210 (GSA-FSS) dated July 26, 1965.

2.7 RUBBER RINGS:

Rubber rings for use in the PVC couplings and fittings shall conform to the requirements of ASTM D1869.

2.8 SERVICE SADDLES:

All service saddles for use on C900 PVC pipe shall be in conformance with the City of San Diego Water Utilities Department's approved materials list.

2.9 THRUST AND ANCHOR BLOCKS:

2.9.1 Concrete shall be 470-C-2500.

2.9.2 Thrust block bearing area shall be based as shown on drawing SDW-151 of the Standard Drawings, or as directed by the Resident Engineer and the Architect.

2.10 ACCESSORIES:

2.10.1 Anchorages: Provide anchorages for tees, bends and valves. After installation, apply full coat of asphalt or other acceptable corrosion-retarding material to surfaces of ferrous anchorages.

2.10.1.1 Clamps, Straps, and Washers: Steel, ASTM A506.

2.10.1.2 Rods: Steel, ASTM A575.

2.10.1.3 Rod Couplings: Malleable-iron, ASTM A197.

2.10.1.4 Bolts: Steel, ASTM A307

2.10.1.5 Cast-Iron Washers: Gray-iron, ASTM A126.

2.10.1.6 Thrust Blocks: Concrete, 2,500 psi.

PART 3 - EXECUTION

3.1 SYSTEM LAYOUT:
Layout the system determining proper elevations for all components from the lines and grades shown on the Drawings.

3.2 EXCAVATING, BACKFILLING AND COMPACTING:

Comply with the requirements specified in Section 31 23 00 of these Specifications, unless otherwise directed.

3.3 INSTALLATION:

3.3.1 General:

3.3.1.1 Pipe, valves, fittings and related components shall be installed to conform to the referenced standards.

3.3.1.2 All connections to existing lines shall be made per San Diego Water Utility Department regulations.

3.3.1.3 All materials shall be installed as required by the Standard Specifications. Provide minimum cover for all piping as specified in referenced standards.

3.3.1.4 Provide valve access boxes for all below-grade valves.

3.3.1.5 Install joints per referenced standards and manufacturer's recommendations.

3.3.1.6 Dielectric Isolators: Where incompatible piping materials come in contact except for the use of valves, isolate from each other with dielectric unions, line size.

3.3.1.7 Building Footing Clearances: Piping shall cross footings through sleeves. Provide City's Representative approved seals at all footings sleeving to prevent water migration.

3.3.1.8 Concrete Work: Unless specifically indicated on the drawings to be furnished by others, furnish and install concrete work such as pads, bases, kick blocks, and the line, where shown.

3.4 THRUST BLOCKS:

3.4.1 Thrust devices shall be cast-in-place concrete, metal harness, or other suitable devices. If the thrust exceeds the bearing valve of the surrounding soil, the soil shall be precompacted before placing concrete. To insure against lateral movement of the waste main and/or valve or fitting where a change in direction of the water main is

made by the use of such fitting, a metal harness of the tie rods and pipe clamps may be used, except for pipe having rubber ring type joints. Steel tie rods and pipe clamps shall be coated with one coated minimum of approved primer.

3.4.2 A reaction or thrust block shall be installed at all valves and at all fittings for pipe larger than 4" diameter, per the drawings and as specified in the Johns-Manville Pipe Instruction Manual or where directed by the Resident Engineer and the Architect and as specified herein. In general, thrust blocks will be placed at all angles greater than 5 degrees, at changes in pipe size, at fittings, at hydrant ells, and at valves.

3.4.3 The area and design of the bearing surface shall be in accordance with drawing SDW-151 of the Standard Drawings.

3.4.4 The bearing surface shall be against undisturbed ground in all cases, except where unstable conditions are encountered. In unstable conditions, the bearing surface shall be as directed by the Resident Engineer and the Architect.

3.4.5 Unless otherwise directed by the Resident Engineer and the Architect, the blocking shall be placed so that the pipe and fitting joints are accessible for repair.

3.4.6 Metal harness of tie rods and pipe clamps shall be used to prevent movement if shown on the Drawings or directed by the Resident Engineer and the Architect.

3.4.7 Exposed steel rods and clamp shall be coated with bituminous mastic in conformance with the Standard Specifications.

3.4.8 Reinforcing steel tiedown rods shall be used on all line valves.

3.4.9 The depth of thrust blocks below valves shall conform with the size of the valve and shall be cut into the side of the trench a minimum of 12 inches on each side.

3.4.10 Concrete for thrust blocks shall be 470-C-2500.

3.4.11 Fire Sprinkler Laterals:

3.4.11.1 Underground pipe fittings shall be installed per NFPA 24, and applicable local codes and standards. Trenching, backfilling, depth of bury and size, shape and location of all thrust blocks shall be acceptable to all jurisdictional agencies.

3.4.11.2 Point of Connection:

3.4.11.2.1 Point of connection for underground fire sprinkler service shall be at site main or at a valved stub on the site main. Size, pipe type and location shall be as shown on civil plans.

3.4.11.2.2 Point of termination shall be at 6" above finished floor, at the interior riser location(s).

3.5 METER BOXES:

3.5.1 Boxes shall be set true to line and to the grade of the top of the curb, sidewalk, or surrounding graded area.

3.5.2 Meter boxes are not to be set until fine grading for landscape grading has been completed.

3.6 INSPECTION OF WORK:

3.6.1 General:

3.6.1.1 Work performed and materials and equipment furnished and installed, as shown on the Drawings or required by these Specifications, shall be subject to inspection by the Resident Engineer and the Architect.

3.6.1.2 Provide the Resident Engineer and the Architect with unrestricted access to the work during construction to allow him the opportunity to ascertain that materials and workmanship are in accordance with the requirements of the Contract Documents.

3.6.1.3 Notify the Resident Engineer and the Architect a sufficient period of time prior to the manufacture or production of materials or equipment, in order that arrangements may be made for shop or plant inspection or testing of the items to be supplied.

3.6.1.4 Furnish the Resident Engineer and the Architect with duplicate, certified copies of all factory and mill test reports.

3.7 UTILITY SERVICE CONNECTIONS:

3.7.1 Before trenching, verify the horizontal location and depths of all existing utility lines within the area.

3.7.2 Reconstruct, repair or replace all pavements, sidewalk, landscape and other items to the satisfaction of the City's Representative.

3.7.3 Arrange for the marking of all utility lines in all areas of trenching or excavation operations.

3.8 TEST AND ADJUSTMENTS:

3.8.1 All piping tests shall be made in the presence of the City Inspector. All piping shall be tested in accordance with local ordinances.

3.8.2 Furnish all test pumps, gauges, equipment, and personnel required and test as necessary to demonstrate the integrity of the finished installation to the review of pertinent authorities and the City's Inspector.

3.8.3 Valves: Test all valve bonnets for tightness. Test operate all valves at least once from closed-to-open-to-close position while valve is under test pressure. Test all automatic

valves for proper operation at the settings indicated. Test pressure relief valve at least three times.

3.8.4 Piping Specialities: Test all piping specialties for proper operation.

3.9 INSPECTION AND STERILIZATION:

3.9.1 Given local authorities having jurisdiction, and City's Inspector 24 hours (minimum) prior notification in order that they may arrange for the following inspection.

3.9.1.1 Pipe: After installation but prior to backfilling.

3.9.1.2 Pressure tests.

3.9.2 Sterilization of Waterlines: Domestic waterlines shall be sterilized in accordance with local codes and/or AWWA standard C-601 "Disinfection of Water Mains."

3.9.3 Fire Sprinkler Laterals:

3.9.3.1 Perform all tests required by NFPA 24 and the authorities having jurisdiction. Maintain an accurate record of all tests and inspections on the jobsite, including date of test and inspection agency.

3.9.3.2 Before connecting interior system to underground main, all underground piping shall be hydrostatically tested, flushed and accepted by authorities having jurisdiction. Provide City with documentation of acceptance by jurisdictional authority. Any health and bacteria tests shall be the responsibility of the Contractor, where required.

3.9.3.3 Provide three (3) copies of final inspection and certification to the Resident Engineer and the Architect.

3.10 ADJUSTING:

Each piece of equipment including valve cans, vaults and all of the systems shall be adjusted to grade and insure proper functioning of all controls, elimination of noise and vibration, and left in first-class operating condition.

3.11 CLEAN-UP:

After completion of the work, thoroughly clean all apparatus and fixtures and remove cement, grease, oil, etc.

END OF SECTION 33 10 00

SECTION 33 30 00 - SANITARY SEWAGE SYSTEM

PART 1 - GENERAL

1.1 RELATED DOCUMENTS:

Documents affecting work of this Section include, but are not necessarily limited to, General Conditions, Supplementary Conditions, and Sections in Division 1 of these Specifications.

1.2 DESCRIPTION:

1.2.1 Work Included: Provide sewer lines and laterals including cleanouts, and appurtenances; make connections to existing sewer lines; and perform pressure, leakage, infiltration, and alignment tests as specified herein, and as needed for a complete and proper installation.

1.2.2 Related Sections:

1.2.2.1 Trenching for utilities is specified in Section 31 23 00.

1.3 REFERENCES:

1.3.1 References made herein to published specifications, standards, methods of testing and recommended methods of trade, industry and governmental organizations shall apply to the work of this section only to the extent specified by reference. All ASTM references refer to the year of original adoption or the year of the latest revision or reapprovals. Refer to Division 1, Section: REFERENCE STANDARDS.

1.3.2 All work shall be provided and installed in accordance with these current specifications, the Standard Specifications for Public Works Construction, 2000 Edition (Green Book), (S.S.P.W.C.), Regional and City of San Diego Amendments, and the San Diego Regional Standard Special Provisions, latest adopted edition, insofar as the same may apply.

1.3.3 The General Requirements, Products, and Execution identified herein supplement the Standard Specifications and Standard Provisions.

1.3.4 In case of conflict, these specifications shall take precedence over the Standard Specifications and the Regional Standard Special Provisions.

1.3.5 City of San Diego Standard Drawings, Pits070112-03 City of San Diego Standard Drawings For Public Works Construction, 2012 Edition

1.4 REQUIREMENTS OF REGULATORY AGENCIES:

1.4.1 Comply with the State of California, Department of Health Services, regarding the separation of water and sewer lines.

1.5 SUBMITTALS:

1.5.1 Materials List/Data:

1.5.1.1 Materials list of items proposed to be provided under this Section.

1.5.1.2 Manufacturer's specifications and other data needed to prove compliance with the specified requirements.

1.5.2 Record Drawings

1.5.2.1 Upon completion of work delivery one (1) complete set of reproducible prints of As-Built Drawings to the Resident Engineer and the Architect.

1.5.3 Test Reports

1.5.3.1 Submit copies of structural integrity, leakage, and performance test data in the number and as required by this Section, and as directed by the Resident Engineer and the Architect.

1.6 QUALITY ASSURANCE:

1.6.1 Use adequate numbers of skilled workmen who are thoroughly trained and experienced in the necessary crafts and who are completely familiar with the specified requirements and the methods needed for proper performance of the work of this Section.

1.6.2 Manufacturer shall have produced the specified materials for a period of five (5) years prior to beginning work of this Section, and shall have the capability to provide the specified materials to meet the delivery and quantity criteria for the project.

1.7 PRODUCT HANDLING:

1.7.1 Inspection; All pipe shall be subject to inspection at the factory, trench, or point of delivery by the Resident Engineer and the Architect.

1.7.2 Protection

1.7.2.1 Deliver, store and handle all products in a manner to prevent damage and deterioration.

1.7.2.2 Use all means necessary to protect the installed work and materials of all other trades.

1.7.3 Replacements: In the event of damage, immediately make all repairs and replacements necessary to the approval of the Resident Engineer and the Architect and at no additional cost to the Owner.

1.7.4 Storage: Contractor shall provide proper storage facilities during the progress of work.

1.8 SITE CONDITIONS:

The Drawings are diagrammatic, but shall be followed as closely as actual construction permits. All deviations from Drawings required to make this work conform to the site conditions, and to the work of others, shall be made as necessary or as directed by the Resident Engineer and the Architect.

1.9 PROJECT RECORD:

Accurate and legible records shall be kept on a set of contract drawings of all changes of work which occur during construction. The Contractor shall record the exact location by dimension and the exact depth by invert elevation, of all underground lines, cleanouts, plugged laterals, etc. He shall record, by dimension and/or scale drawings, all work as actually installed. All information necessary to maintain and/or service any concealed work shall be noted on these record drawings. Such records shall be kept up-to-date with all entries reviewed by the Resident Engineer and the Architect before the work is buried or covered up. Prior to field acceptance, the Contractor shall submit this "As-Built" information to the Resident Engineer and the Architect.

PART 2 - PRODUCTS

2.1 PIPE:

2.1.1 Poly-vinyl Chloride (PVC) Pipe

2.1.1.1 Poly-vinyl chloride pipe, fittings, couplings, and joints shall be in conformance with the size, material and performance requirements of ASTM D3034, SDR35, and shall have gasketed joints in conformance with ASTM F477.

During production of the pipe, the manufacturer shall perform the specified tests for each pipe marking. A certification by the manufacturer indicating compliance with specification requirements shall be delivered with the pipe. The certification shall include the test result data.

2.1.1.2 Pipe shall be made of PVC plastic having a cell classification of 12454-B, 12454-C, or 13364-B as defined in ASTM D1784. The fittings shall be made of PVC plastic having a cell classification of 12454-B, 12454-C, or 13343-C.

2.1.1.3 The basis for acceptance shall be the inspection of pipe, fittings, and couplings; the tests specified; and compliance with the specifications.

2.1.1.4 All pipe shall be of solid wall construction with smooth interior and exterior surfaces.

2.2 PIPE JOINTS:

2.2.1 Poly-vinyl Chloride (PVC) Pipe

2.2.1.1 Joints in accordance with ASTM D3212.

2.3 CLEANOUTS:

2.3.1 Cleanouts

2.3.1.1 Cleanout risers shall be PVC and the same size as the line on which they are installed.

2.3.1.2 Cleanouts shall have plastic screw-on caps.

2.4 CLEANOUT COVERS:

2.4.1 Cleanout covers shall be made of cast iron conforming to ASTM A48, Class 30. Castings shall be smooth, clean, and free from blisters, blowholes, and shrinkage. Covers shall be of the traffic type.

2.6.2 Covers shall be designed for H-20 loading.

2.6.3 Covers shall have the word "SEWER" cast thereon as shown on the Standard Drawings.

2.5 PIPE BEDDING:

2.5.1 Normal Bedding

2.5.1.1 3/4-inch max. crushed rock.

2.5.1.2 Sand equivalent 30 material.

2.5.1.3 Refer to Standard Drawings for depths of bedding material for pipe base and within pipe zone.

2.5.2 Overwidth Bedding

2.5.2.1 One (1) sack slurry.

2.5.2.2 3/4-inch max. crushed rock or sand equivalent 30 material.

2.5.2.3 Refer to Standard Drawings for depth of overwidth bedding materials.

PART 3 - EXECUTION

3.1 SYSTEM LAYOUT:

Layout the system determining proper elevations for all components from the lines and grades shown on the approved Drawings.

3.2 EXCAVATING, BACKFILLING AND COMPACTING:

3.2.1 General: Comply with the applicable requirements specified and related work in Section 31 23 00 of these Specifications.

3.2.2 Pipe Base: Place and compact a minimum of 4-inches of 3/4-inch crushed rock.

3.3 PIPE INSTALLATION:

3.3.1 General

3.3.1.1 Install pipe, laterals, cleanouts, pipe fittings, and other system components in accordance with the Standard Specifications and Standard Drawings, except as modified herein or shown on the approved Drawings.

3.3.1.2 Install materials specified in accordance with Section 306-1 "Open Trench Operations" of the Standard Specification, unless specified otherwise in this Section.

3.3.1.3 Pipe shall be laid up-grade with the bell ends of the pipe up-grade.

3.3.1.4 The interior of the sewer pipe shall be cleaned of all dirt and superfluous materials of all description immediately prior to installing the pipe.

3.3.1.5 At times when the pipe laying is not in progress, the open end of the pipe shall be closed with a tight-fitting cap or plug to prevent the entrance of foreign matter into the pipe. These provisions shall apply during the noon hour as well as overnight. Sewers shall not be used as drains for dewatering construction trenches.

3.3.1.6 Wyes, and other types of branches shall be furnished and installed along with pipe. Wyes sized as specified on the Drawing's shall be installed for all sewer house connections and for future sewer house connections as shown. The longitudinal barrel of branch fittings, to be placed in line and grade with the sewer mains, shall be of the same diameter, quality, and type as specified for sewer installation, and shall conform to the applicable provisions set forth for gravity sewer pipe. Unless otherwise specified, the branch of wye fittings shall be inclined upward at an angle not greater than 45 degrees from a horizontal line. No wye for sewer house connection branch shall be placed closer than 5 feet downstream of the centerline of any structure. The Contractor shall place a support of graded crushed rock or gravel under every wye branch when installed. The support shall be placed in accordance with the detail shown on drawing S-4 of the Standard Drawings.

3.3.2 Assembling Pipe Joints

3.3.3.1 Clean all connecting parts of the pipe, rings, bells and spigots before assembly.

3.3.3.2 Assemble joints in accordance with manufacturer's recommendations. Use of excessive lubricant will not be permitted.

3.4 CLEANOUT INSTALLATION:

Install cleanouts and riser extension from sewer pipe to cleanout at grade. Use PVC fittings in sewer pipes at branches for cleanouts. Install piping so cleanouts open in direction of flow in sewer pipe.

3.5 INSPECTION OF WORK:

3.5.1 General

3.5.1.1 Work performed and materials furnished and installed, as shown on the Drawings or required by these Specifications, shall be subject to inspection by the Resident Engineer and the Architect.

3.5.1.2 Provide the Resident Engineer and the Architect with unrestricted access to the work during construction to allow him the opportunity to ascertain that materials and workmanship are in accordance with the requirements of the Contract Documents.

3.5.1.3 Notify the Resident Engineer and the Architect a sufficient period of time prior to the manufacture or production of materials, in order that arrangements may be made for shop or plant inspection or testing of the items to be supplied.

3.5.1.4 Furnish the Resident Engineer and the Architect with duplicate, certified copies of all factory and manufacturer's test reports.

3.8 UTILITY SERVICE CONNECTIONS:

3.8.1 General

3.8.1.1 Before trenching, verify the horizontal location and invert elevations of all sanitary sewer connection points, and the horizontal location of all other existing utility lines.

3.8.1.2 Reconstruct, repair, or replace all pavements, sidewalk, landscape and other items removed or damaged, to the satisfaction of the jurisdictional authority or the Resident Engineer and the Architect.

3.8.1.3 Arrange for the marking of all utility lines in all areas of trenching and excavation operations.

3. 9 FIELD TESTS:

3.9.1 General

3.9.1.1 Sewer lines will be checked by the Resident Engineer and the Architect when backfill has reached the top of the pipe. Both external and internal inspections for alignment may be made at this time.

3.9.1.2 All material, equipment, and labor to perform the tests shall be provided by the Contractor at no cost to the Owner.

3.9.2 Leakage and Infiltration Test

The pipe, cleanouts, and other appurtenances shall be tested for leakage and infiltration in accordance with Section 306-1.4 of the Standard Specifications.

3.9.3 Final Inspection

3.9.3.1 After paving has been completed and all manholes and cleanouts raised to grade, a final visual inspection will be made. The Contractor shall furnish the necessary labor to assist the Resident Engineer and the Architect in making the final inspection. Additional balling may be required if the lines are dirty even though lines were previously balled. The Contractor shall have a responsible person or supervisor present at the final inspection to remove manhole covers and to note any corrections required by the Resident Engineer and the Architect in order to obtain final approval. The Contractor shall request final inspection by giving at least one day's notice to the Resident Engineer and the Architect.

3.9.3.2 The Contractor shall furnish "as-built" record drawings showing any deviations from the original approved Drawings. All sewers stubbed out for future extensions shall have the invert elevation of the terminal pipe verified by the Contractor and posted on the "as-built" record drawings. Failure to comply with these requirements will necessitate withholding approval of final acceptance.

3.9.3.3 The Contractor shall be liable for any failure of sewer facilities that were installed by him for a period of one year after date of final acceptance.

END OF SECTION 33 30 00

SECTION 33 40 00 - SITE DRAINAGE

PART 1 - GENERAL

1.1 RELATED DOCUMENTS AND DESCRIPTION OF WORK:

The work includes furnishing and installing underground site drainage and sewer manhole adjustments as shown and/or specified, including the construction of cleanouts, catch basins, inlets, manholes, piping, retaining wall perforated foundation drains, as indicated and/or specified and/or connection of the roof drain lines furnished under the Plumbing section to catch basins and drain lines as shown. The Conditions of the Contract and Division 1 apply to this section as fully as if repeated herein.

1.2 GOVERNING DOCUMENTS:

1.2.1 Local Municipality/County Regional Standard Drawings, latest edition. Pits070112-03 City Of San Diego Standard Drawings For Public Works Construction, 2012 Edition

1.2.2 Standard Drawings and Standard Specifications for Public Works Construction, latest edition.

1.2.3 Occupational Safety and Health Regulations for Construction and the Safety Orders of the State Industrial and Accidental Commission of California.

1.3 REFERENCES:

The latest editions of the specifications and standard referenced herein, published by the following organizations, apply to the work only to the extent specified by the reference:

American Association of State Highway and Transportation Officials (AASHTO)
American Society for Testing Materials (ATM)

PART 2 - PRODUCTS

2.1 MATERIALS:

2.1.1 Pre-cast Concrete Units: Catch basins and inlets shall conform to ASTM C 913 and manhole sections shall conform to ASTM C478 except that Portland cement shall be Type II, low alkali.

2.1.2 Castings: Manufacture castings true to pattern free from blowholes, porosity, hard spots, shrinkage distortion or other defects. Castings shall be of grey iron, ductile iron or steel as indicated or as required to withstand loadings.

2.1.1.1 Grey iron castings shall conform to ASTM A48, Class 35.

2.1.2.2 Ductile iron castings shall conform to ASTM A530, Grade 60-40-18.

2.1.2.3 Steel castings shall conform to ASTM A27 for mild to medium strength castings and ASTM A148 for high strength castings.

2.1.3 Fabricated steel gratings and frames shall be fabricated from steel conforming to ASTM A36 or ASTM A576, Grades 1021, 1022, 1026, 1029 or 1030. Welding shall conform to AWS D1.1. Burrs, rough and sharp edges and other flaws shall be removed. Warped pieces shall be straightened after all fabrication.

2.1.4 Painting: Castings and steel fabrications shall be given hot dipped zinc coating conforming to ASTM A123.

2.1.5 Concrete Appurtenances: Concrete for catch basins and manholes shall be 3250 psi at 28 days and conform to Section 03300. Reinforcing steel is specified in Section 03200.

2.1.6 Subsurface Drain Pipe: Pipe shall be one of the following subject to the limitations specified:

2.1.6.1 Perforated polyvinyl chloride (PVC) pipe conforming to ASTM D3033, SDR 35 minimum schedule 40, for maximum fill height of 35 feet.

2.1.7 Filter Fabric: Fabric shall be one of the following non-woven polyester fabrics (unless otherwise noted in Section 07100) or equal approved in accordance with Section 01605.

Cellanese Fibers: "Mirafi 140S"

2.1.8 Filter Material: Gravel or crushed stone 3/4" maximum and shall be free draining.

2.1.9 Storm drain lines 15" in diameter and smaller shall be one of the following unless otherwise indicated:

2.1.9.1 PVC plastic pipe conforming to ASTM D 3033 or D 3034, SDR 35 with elastomeric gaskets conforming to ASTM 477.

2.1.10 Storm Drain Lines 18" in Diameter and Larger: Pre-cast reinforced concrete pipe (R.C.P.) having a minimum D-Load rating of 2000-D.

PART 3 - EXECUTION

3.1 TRENCHING:

3.1.1 Trenching is specified in Section 31 23 00.

3.1.2 Trench bottom shall be accurately graded to provide uniform bearing and support to pipe and a uniform slope of not less than 1 percent unless otherwise shown. Excavate for pipe hubs. Unsuitable soils or rock shall be removed to a depth deemed necessary.

3.2 CONNECTIONS TO APPURTENANCES:

Where pipe connects into catch basin inlet or manhole walls, sleeves may be installed in the forms; after the forms are removed, the pipe shall be dry packed in place.

3.3 INSTALLATION OF SUBSURFACE DRAINS:

3.3.1 Bedding: Line the trench with filter fabric with joints in fabric lapped not less than 4 inches. Cover the bottom of the trench, full width, with 4 inches of filter material.

3.3.2 Pipe Laying: Lay pipe with perforations at the bottom and with sections joined with couplings that will hold pipe firmly in place without the use of sealing compounds or gaskets. Cutting and matching of asbestos pipe shall be done in accordance with CAL/OSHA and local Air Pollution Control regulations.

3.3.3 Backfilling: Place filter material over the pipe to the height indicated and wrap filter fabric over the top of the material. Backfill and compact remainder of the trench in accordance with Section 31 23 00.

3.3.4 Drains for retaining walls shall be connected to site system unless otherwise approved.

3.4 INSTALLATION OF STORM DRAINS:

3.4.1 Bedding: Bedding for storm drain pipe is specified in Section 31 23 00.

3.4.2 Pipe Laying: Keep trenches dry and free of rocks, clods and other unsuitable material during laying and bedding operations. Open ends of pipe shall be closed temporarily at the end of each day work using blocks or bulkheads.

3.4.2.1 Polyvinyl Chloride Pipe: Install pipe in accordance with manufacturer's directions using elastomeric joints.

3.4.2.2 Reinforced Concrete Pipe: Install pipe in accordance with manufacturer’s directions using mortar filled ball joints.

3.4.3 Backfilling: Do not backfill until elevations and dimensions of pipe are recorded on the Record Drawings as specified in Section 01700. Backfilling and compaction are specified in Section 31 23 00

3.4.4 Drains for retaining walls shall be connected to site system unless otherwise approved.

END OF SECTION 33 40 00

SUPPLEMENTARY SPECIAL PROVISIONS

APPENDICES

APPENDIX A

CALIFORNIA DEVELOPMENT PERMIT AND SITE DEVELOPMENT PERMIT

CALIFORNIA COASTAL COMMISSION
San Diego Coast Area Office
7575 Metropolitan Drive, Suite 103
San Diego, CA 92108-4402
(619) 767-2370

Date: August 30, 2011
Permit Application No.: 6-11-044

NOTICE OF INTENT TO ISSUE PERMIT

(Upon satisfaction of special conditions)

THIS IS NOT A COASTAL DEVELOPMENT PERMIT

THE SOLE PURPOSE OF THIS NOTICE IS TO INFORM THE APPLICANT OF THE STEPS NECESSARY TO OBTAIN A VALID AND EFFECTIVE COASTAL DEVELOPMENT PERMIT ("CDP"). A Coastal Development Permit for the development described below has been approved but is not yet effective. Development on the site cannot commence until the CDP is effective. In order for the CDP to be effective, Commission staff must issue the CDP to the applicant, and the applicant must sign and return the CDP. **Commission staff cannot issue the CDP until the applicant has fulfilled each of the "prior to issuance" Special Conditions.** A list of all of the Special Conditions for this permit is attached.

The Commission's approval of the CDP is valid for two years from the date of approval. To prevent expiration of the CDP, you must fulfill the "prior to issuance" Special Conditions, obtain and sign the CDP, and commence development within two years of the approval date specified below. You may apply for an extension of the permit pursuant to the Commission's regulations at Cal. Code Regs. title 14, section 13169.

On **August 10, 2011**, the California Coastal Commission approved Coastal Development Permit No. **6-11-044**, requested by **City of San Diego** subject to the attached conditions, for development consisting of: **Demolition of an existing three-story, 30 ft. high, 897 sq. ft. lifeguard station and construction of a new three-story, 30 ft. high, 3,125 sq. ft. lifeguard station including a buried semi-circular sheet-pile bulkhead seawall located 30 feet seaward of the proposed lifeguard structure. Also proposed is an architectural concrete cap on top of the bulkhead wall a maximum of approximately 3 ft. high,** more specifically described in the application file in the Commission offices. **Commission staff will not issue the CDP until the "prior to issuance" special conditions have been satisfied.**

The development is within the coastal zone **on the beach adjacent to 700 North Jetty Road, Mission Beach, San Diego, San Diego County. APN 423-750-01.**

If you have any questions regarding how to fulfill the "prior to issuance" Special Conditions for CDP No. 6-11-044, please contact the Coastal Program Analyst identified below.

Sincerely,
PETER M. DOUGLAS
Executive Director

By: MELISSA AHRENS
Coastal Program Analyst
Date: August 30, 2011

ACKNOWLEDGMENT

The undersigned permittee acknowledges receipt of this Notice and fully understands its contents, including all conditions imposed.

_____ Date

_____ Permittee

Please sign and return one copy of this form to the Commission office at the above address.

STANDARD CONDITIONS

1. **Notice of Receipt and Acknowledgment.** The permit is not valid and development shall not commence until a copy of the permit, signed by the permittee or authorized agent, acknowledging receipt of the permit and acceptance of the terms and conditions, is returned to the Commission office.

2. **Expiration.** If development has not commenced, the permit will expire two years from the date on which the Commission voted on the application. Development shall be pursued in a diligent manner and completed in a reasonable period of time. Application for extension of the permit must be made prior to the expiration date.

3. **Interpretation.** Any questions of intent or interpretation of any condition will be resolved by the Executive Director or the Commission.

4. **Assignment.** The permit may be assigned to any qualified person, provided assignee files with the Commission an affidavit accepting all terms and conditions of the permit.

5. **Terms and Conditions Run with the Land.** These terms and conditions shall be perpetual, and it is the intention of the Commission and the permittee to bind all future owners and possessors of the subject property to the terms and conditions.

SPECIAL CONDITIONS:

The permit is subject to the following conditions:

1. Final Plans. **PRIOR TO THE ISSUANCE OF THE COASTAL DEVELOPMENT PERMIT**, the applicant shall submit to the Executive Director for review and written approval final site and building plans for the proposed lifeguard station. The final plans shall be in substantial conformance with the plans by Dominy + Associates Architects dated 6/2/2011, but shall be revised to include the following notes:

a) No advertising shall be permitted on the approved structures;

b) Clocks, temperature displays, or other safety information may be located on the façade of the approved structures.

c) Any fill material used during construction shall be clean, beach compatible material with no rubble, organics, or other debris.

d) During construction of the approved development, disturbance to sand and intertidal areas shall be minimized to the maximum extent feasible. All excavated beach sand shall be redeposited on the beach. Local sand, cobbles or shoreline rocks shall not be used for backfill or for any other purpose as construction material.

e) The landscaping proposed along the perimeter of the new lifeguard station shall be deleted.

The permittee shall undertake the development in accordance with the approved plans. Any proposed changes to the approved plans shall be reported to the Executive Director. No changes to the plans shall occur without a Coastal Commission approved amendment
to this coastal development permit unless the Executive Director determines that no amendment is legally required.

2. As-Built Plans. Within 60 days following completion of the project, the permittees shall submit as-built plans to be reviewed and approved in writing by the Executive Director, documenting that the lifeguard station and seawall have been constructed consistent with the Executive Director approved construction plans

3. Storage and Staging Areas/Access Corridors. **PRIOR TO THE ISSUANCE OF THE COASTAL DEVELOPMENT PERMIT**, the applicant shall submit to the Executive Director for review and written approval, final plans indicating the location of access corridors to the construction site and staging areas. The final plans shall indicate that:

a) No overnight storage of equipment or materials shall occur on sandy beach or public parking spaces.

b) Access corridors shall be located in a manner that has the least impact on public access to and along the shoreline via Mission Boulevard, Ocean Front Walk and the public parking lot south of the project site.

c) No work shall occur on the beach between Memorial Day weekend and Labor Day of any year.

d) The applicant shall submit evidence that the approved plans/notes have been incorporated into construction bid documents. The staging site shall be removed and/or restored immediately following completion of the development.

The permittee shall undertake the development in accordance with the approved plans. Any proposed changes to the approved plans shall be reported to the Executive Director. No changes to the plans shall occur without a Coastal Commission approved amendment to this coastal development permit unless the Executive Director determines that no amendment is legally required.

4. Protection of Water Quality - During Construction. **PRIOR TO ISSUANCE OF THE COASTAL DEVELOPMENT PERMIT**, the applicant shall submit for the review and approval of the Executive Director a Construction Best Management Practices Plan for the project site, prepared by a licensed professional, and shall incorporate erosion, sediment, and chemical control Best Management Practices (BMPs) designed to minimize to the maximum extent practicable the adverse impacts to receiving waters associated with construction. The applicant shall implement the approved Construction Best Management Practices Plan on the project site prior to and concurrent with the project staging, demolition and construction operations. The BMPs shall be maintained throughout the development process.

A. Said plan shall include the following requirements:

(i) No construction materials, debris, or waste shall be placed or stored in a manner where it may be subject to wave, wind, rain, or tidal erosion and dispersion.

(ii) Any and all refuse and debris resulting from construction and demolition activities shall be removed from the project site within 72 hours of completion of demolition and construction. Construction and demolition debris and sediment shall be removed from or contained and secured within work areas each day that construction or demolition occurs to prevent the accumulation of sediment and other debris that could be discharged into coastal waters. All demolition/ construction debris and other waste materials removed from the project site shall be disposed of or recycled in compliance with all local, state and federal regulations. No debris or other waste materials shall be placed in coastal waters or be allowed to move into coastal waters. If a disposal site is located in the coastal zone, a coastal development permit or an amendment to this permit shall be required before disposal can take place.

(iv) Erosion control/sedimentation Best Management Practices (BMPs) shall be used to control dust and sedimentation impacts to coastal waters during construction and demolition activities. BMPs shall include, but are not limited to: placement of sand bags around drainage inlets to prevent runoff/sediment transport into the storm drain system and Pacific Ocean

(v) All construction materials, excluding lumber, shall be covered and enclosed on all sides, and kept as far away from a storm drain inlet and receiving waters as possible.

B. The required Construction Best Management Practices Plan for the project site shall also include the following BMPs designed to prevent spillage and/or runoff of construction and demolition-related materials, sediment, or contaminants associated with construction activity. The applicant shall:

(i) Develop and implement spill prevention and control measures and ensure the proper handling, storage, and application of petroleum products and other construction materials. These shall include a designated fueling and vehicle maintenance area with appropriate berms and protection to prevent any spillage of gasoline or related petroleum products or contact with runoff. The fueling and maintenance area shall be located as far away from the receiving waters and storm drain inlets as possible and shall not be located on the beach if at all possible. If fueling or maintenance is proposed to be on the beach then the applicant shall submit a plan showing how there is essentially no possibility of contaminating beach materials through those operations.

(ii) Maintain and wash equipment and machinery in confined areas specifically designed to control runoff. Thinners or solvents shall not be discharged into sanitary or storm sewer systems. Washout from concrete trucks shall be disposed of at a controlled location not subject to runoff into coastal waters, and more than fifty feet away from a storm drain, open ditch or surface waters.

(iii) Provide and maintain adequate disposal facilities for solid waste, including excess concrete, produced during construction.

(iv) Provide and maintain temporary sediment basins (including debris basins, desilting basins or silt traps), temporary drains and swales, sand bag barriers, wind barriers such as solid board fence or hay bales, and silt fencing.

(v) Stabilize any stockpiled fill with geofabric covers or other appropriate cover, and close and stabilize open trenches as soon as possible.

(vi) Prior to final inspection of the proposed project the applicant shall ensure that no gasoline, lubricant, or other petroleum-based product was deposited on the beach or at any beach facility. If such residues are discovered, the residues and all contaminated sand shall be reported to the Executive Director in order to determine if the removal and disposal of the

contaminated matter shall require a permit amendment pursuant to the requirements of the Coastal Act and the California Code of Regulations.

The Construction Best Management Practices Plan approved by the Executive Director pursuant to this condition shall be attached to all final construction plans. The permittee shall undertake the approved development in accordance with the Construction Best Management Practices Plan approved by the Executive Director pursuant to this condition. Any proposed changes to the approved Construction Best Management Practices Plan shall be reported to the Executive Director in order to determine if the proposed change shall require a permit amendment pursuant to the requirements of the Coastal Act and the California Code of Regulations. No changes to the approved plan shall occur without a Commission amendment to this coastal development permit unless the Executive Director determines that no amendment is legally required.

5. Protection of Water Quality - Project Design & Post Construction. **PRIOR TO ISSUANCE OF THE COASTAL DEVELOPMENT PERMIT**, the applicant shall submit for the review and approval of the Executive Director, a Water Quality Management Plan (WQMP) for the post-construction project site, prepared by a licensed water quality professional, and shall incorporate structural and non-structural Best Management Practices (BMPs) designed to reduce, to the maximum extent practicable, the volume, velocity and pollutant load of storm water and nuisance flow leaving the developed site. The plan shall be in conformance with the following requirements:

A. Water Quality Goals.

(i) Appropriate site design, source control and treatment control BMPs shall be implemented to minimize the amount of polluted runoff from all surfaces and activities on the development site.

(ii) Runoff from all parking areas, maintenance areas, rooftops, and driveways shall be collected and directed through a system of appropriate structural BMPs. The filter elements shall be designed to 1) trap sediment, particulates and other solids and 2) remove or mitigate contaminants through filtration and/or biological uptake. There shall be no construction of drain outlets onto the beach. The drainage system shall also be designed to convey and discharge runoff from the building site in a non-erosive manner.

(iii) If the applicant uses post-construction structural BMPs (or suites of BMPs), they should be designed to treat, infiltrate or filter the amount of storm water

runoff produced by all storms up to and including the 85th percentile, 24-hour storm event for volume-based BMPs, and/or the 85th percentile, 1-hour storm event, with an appropriate safety factor (i.e., 2 or greater), for flow-based BMPs.

B. Monitoring and Maintenance

All BMPs shall be operated, monitored, and maintained for the life of the project and at a minimum, all structural BMPs shall be inspected, cleaned-out, and where necessary, repaired, at the following minimum frequencies: 1) prior to October 15th each year; 2) during each month between October 15th and April 15th of each year and, 3) at least twice during the dry season (between April 16 and October 14).

(i) Debris and other water pollutants removed from structural BMP(s) during clean-out shall be contained and disposed of in a proper manner.

(ii) All inspection, maintenance and clean-out activities shall be documented in an **annual report** submitted to the Executive Director no later than June 30th of each year. This report shall be submitted for the first three years following the completion of development.

(iii) It is the applicant's responsibility to maintain the drainage system and the associated structures and BMPs according to manufacturer's specification.

The permittee shall undertake and maintain the approved development in accordance with the Water Quality Management Plan approved by the Executive Director pursuant to this condition. Any proposed changes to the approved Water Quality Management Plan shall be reported to the Executive Director in order to determine if the proposed change shall require a permit amendment pursuant to the requirements of the Coastal Act and the California Code of Regulations. No changes to the approved plan shall occur without a Commission amendment to this coastal development permit unless the Executive Director determines that no amendment is legally required.

6. Exterior Treatment. **PRIOR TO ISSUANCE OF THE COASTAL DEVELOPMENT PERMIT AMENDMENT**, the applicant shall submit for the review and approval in writing of the Executive Director, a final color board or other indication of the exterior materials and color scheme to be utilized in the construction of the proposed lifeguard station, in substantial conformance with the plans by Dominy + Associates Architects dated 6/2/2011. The color of the structures and roofs

permitted hereby shall be restricted to colors compatible with the surrounding environment with no bright tones except as minor accents. All windows shall be comprised of non-glare glass.

The permittee shall undertake the development in accordance with the color board. Any proposed changes to the approved color board shall be reported to the Executive Director. No changes to the color board that result in either building taking on a substantially different appearance inconsistent with the surrounding environment shall occur without a Coastal Commission approved amendment to this coastal development permit unless the Executive Director determines that no amendment is legally required.

7. Removal of Riprap. **PRIOR TO ISSUANCE OF THE COASTAL DEVELOPMENT PERMIT**, the applicant shall submit for review and written approval of the Executive Director a plan for removal of the rip rap from the beach fronting the existing lifeguard station proposed to be demolished. The removal plan shall provide:

a. All visible and extractable rip rap seaward of the existing lifeguard station proposed to be demolished shall be removed from the beach. The rock shall be removed within the identified work area (Site Plan from TerraCosta Consulting Group/Figure 1).

b. After the initial removal effort that is part of construction, future maintenance efforts shall include removal of any additional riprap (excluding approved toestone) from the portions of the dry beach seaward of the existing lifeguard station that may become visible in the future.

c. A schedule for removal, with the first extraction to occur within 1 year of issuance of the Coastal Development Permit;

d. Criteria for removal, such as all visible rock, all rock within 3 feet of the surface of the sand layer;

e. Method of removal;

f. Location of the export site. If the export site is within the coastal zone, a separate Coastal Development Permit or permit amendment may be required from the California Coastal Commission or its successors in interest;

g. General plans for the disposal of additional riprap that may become visible in subsequent years.

h. Removal of riprap shall not occur between Memorial Day weekend and Labor Day of any year.

8. State Lands Commission Review. **PRIOR TO ISSUANCE OF THE COASTAL DEVELOPMENT PERMIT**, the applicant shall obtain a copy of written authorization to construct the proposed development from the State Lands Commission.

9. No Future Seaward Extension of Shoreline Protective Device.

A. By acceptance of this Permit, the applicant agrees, on behalf of itself (or himself or herself, as applicable) and all successors and assigns, that no future repair or maintenance, enhancement, reinforcement, or any other activity affecting the shoreline protective device for the lifeguard tower approved pursuant to Coastal Development Permit No.6-11-044, as described and depicted on an Exhibit attached to the Notice of Intent to Issue Permit (NOI) that the Executive Director issues for this permit, shall be undertaken if such activity extends the footprint seaward of the subject shoreline protective device. By acceptance of this Permit, the applicant waives, on behalf of itself (or himself or herself, as applicable) and all successors and assigns, any rights to such activity that may exist under Public Resources Code Section 30235.

B. **PRIOR TO THE ISSUANCE BY THE EXECUTIVE DIRECTOR OF THE NOI FOR THIS PERMIT**, the applicant shall submit for the review and approval of the Executive Director, and upon such approval, for attachment as an Exhibit to the NOI, a formal legal description and graphic depiction of the shoreline protective device approved by this permit, as generally described above and shown on Exhibit #s 1 & 7 attached to this staff report, showing the footprint of the device and the elevation of the device referenced to NGVD (National Geodetic Vertical Datum).

10. Assumption of Risk, Waiver of Liability and Indemnity Agreement

A. By acceptance of this permit, the applicant acknowledges and agrees (i) that the site may be subject to hazards from waves, storm waves, flooding and erosion; (ii) to assume the risks to the applicant and the property that is the subject of this permit of injury and damage from such hazards in connection with this permitted development; (iii) to unconditionally waive any claim of

damage or liability against the Commission, its officers, agents, and employees for injury or damage from such hazards; and (iv) to indemnify and hold harmless the Commission, its officers, agents, and employees with respect to the Commission's approval of the project against any and all liability, claims, demands, damages, costs (including costs and fees incurred in defense of such claims), expenses, and amounts paid in settlement arising from any injury or damage due to such hazards.

B. **PRIOR TO ANY CONVEYANCE OF THE PROPERTY THAT IS THE SUBJECT OF THIS COASTAL DEVELOPMENT PERMIT**, the applicant shall execute and record a deed restriction, in a form and content acceptable to the Executive Director: (1) indicating that, pursuant to this permit, the California Coastal Commission has authorized development on the subject property, subject to terms and conditions that restrict the use and enjoyment of that property (hereinafter referred to as the "Standard and Special Conditions"); and (2) imposing all Standard and Special Conditions of this permit as covenants, conditions and restrictions on the use and enjoyment of the Property. The restriction shall include a legal description of the applicant's entire parcel or parcels. It shall also indicate that, in the event of an extinguishment or termination of the deed restriction for any reason, the Standard and Special Conditions of this permit shall continue to restrict the use and enjoyment of the subject property so long as either this permit or the development it authorizes – or any part, modification, or amendment thereof – remains in existence on or with respect to the subject property.

C. **PRIOR TO ISSUANCE OF THE COASTAL DEVELOPMENT PERMIT**, the applicant shall submit a written agreement, in a form and content acceptable to the Executive Director, incorporating all of the above terms of this condition.

Y:\San Diego\Noi 2000\6-11-044n.doc

CALIFORNIA COASTAL COMMISSION
San Diego Coast District Office
7575 Metropolitan Drive, Suite 103
San Diego, California 92108-4402
PH (619) 767-2370 FAX (619) 767-2384

COASTAL DEVELOPMENT PERMIT EXTENSION

May 28, 2014

Coastal Development Permit Extension No. **6-11-044-E2**

Re: Extension Request for Permit No.: **6-11-044**
Original Permit Expiration Date: August 10, 2013
Extended Permit Expiration Date: August 10, 2015

City of San Diego, Engineering & Capital Projects , 600 B Street, Suite 800, Ms 90, San Diego, CA 92101

APN(s): 06073-4237500100

Dear City of San Diego, Engineering & Capital Projects:

The Executive Director has determined that there are no changed circumstances affecting the conformity of the subject development with the California Coastal Act. No objections to this determination have been received at the Commission office. Therefore, the Executive Director grants an extension of the subject permit, subject to the same conditions approved by the Commission, to expire on the Extended Permit Expiration Date indicated above.

CHARLES LESTER,
Executive Director

Alexander Llerandi
Coastal Program Analyst

cc: File

STATE OF CALIFORNIA -- THE NATURAL RESOURCES AGENCY EDMUND G. BROWN, JR., *Governor*

CALIFORNIA COASTAL COMMISSION
SAN DIEGO AREA
7575 METROPOLITAN DRIVE, SUITE 103
SAN DIEGO, CA 92108-4421
(619) 767-2370

May 12, 2014

City of San Diego
Jihad Sleiman
525 B Street Suite 700
San Diego, CA 92101

Re: Coastal Development Permit Extension No. 6-11-044-E2

Dear Mr. Sleiman:

Enclosed please find the Notice of Extension Request For Coastal Development Permit for your extension application for Coastal Development Permit No. 6-11-044. On May 8, 2014, a Coastal Development Permit Extension was erroneously sent to you rather than the above-referenced notice. Please discard the Coastal Development Permit Extension, as it has not yet been approved by the California Coastal Commission and thus has no legal effect. When and if your extension request is approved by the California Coastal Commission, a new, properly dated, and legally valid Coastal Development Permit Extension will be mailed to you, making the extension official at that time.

If you have any questions, please feel free to contact the San Diego office at (619) 767-2370.

Sincerely,

Alexander Llerandi
Coastal Program Analyst
California Coastal Commission
San Diego Coast District

(Document1)

CALIFORNIA COASTAL COMMISSION
San Diego Coast District Office
7675 Metropolitan Drive, Suite 103
San Diego, California 92108-4402
PH (619) 767-2370 FAX (619) 767-2384

NOTICE OF EXTENSION REQUEST FOR COASTAL DEVELOPMENT PERMIT

May 12, 2014

Notice is hereby given that City of San Diego, Engineering & Capital Projects has applied for a one year extension of 6-11-044 granted by the California Coastal Commission on

for: Demolition of an existing three-story, 30 ft., high, 897 sq. ft. lifeguard station and construction of a new three-story, 30 ft. high, 3,125 sq. ft. lifeguard station including a buried semi-circular sheet-pile bulkhead seawall located 30 feet seaward of the proposed lifeguard structure. Also proposed is an architectural concrete cap on top of the bulkhead wall a maximum of approximately 3 ft. high.

at: Adjacent to 700 Jetty Road, Mission Beach, San Diego, San Diego County

Pursuant to Section 13169 of the Commission Regulations, the Executive Director has determined that there are no changed circumstances affecting the proposed development's consistency with the Coastal Act. The Commission Regulations state that "if no objection is received at the Commission office within ten (10) working days of publishing notice, this determination of consistency shall be conclusive... and the Executive Director shall issue the extension." If an objection is received, the extension application shall be reported to the Commission for possible hearing.

Persons wishing to object or having questions concerning this extension application should contact the district office of the Commission at the above address or phone number.

Sincerely,
CHARLES LESTER
Executive Director

Alexander Llerandi
Coastal Program Analyst

THE ORIGINAL OF THIS DOCUMENT
WAS RECORDED ON MAY 13, 2011
DOCUMENT NUMBER 2011-0249841
Ernest J. Dronenburg, Jr., COUNTY RECORDER
SAN DIEGO COUNTY RECORDER'S OFFICE
TIME: 11:14 AM

RECORDING REQUESTED BY
CITY OF SAN DIEGO
DEVELOPMENT SERVICES
PERMIT INTAKE, MAIL STATION 501

WHEN RECORDED MAIL TO
PERMIT INTAKE
MAIL STATION 501

SPACE ABOVE THIS LINE FOR RECORDER'S USE

JOB ORDER NUMBER: 335040

Site Development Permit No. 197971
South Mission Beach Lifeguard Station
Hearing Officer

This Site Development Permit No. 197971 is granted by the Hearing Officer of the City of San Diego to the Engineering and Capital Projects Department, of the City of San Diego Owner/Permittee, pursuant to San Diego Municipal Code [SDMC] section 143.0110. The 9.79-acre site is located at the south end of South Mission Beach and just north of the North Jetty in the Mission Beach Precise District in the R-S, R-2B and R-2 zones of the Mission Beach Precise Plan. The project site is legally described as Block No. 6801, Mission Beach, Map No. 1809.

Subject to the terms and conditions set forth in this Permit, permission is granted to Owner/Permittee to demolish the existing South Mission Beach Lifeguard Station and construct a replacement 3,125 square-foot lifeguard station with third-story observation tower, first aid room, a reception area, ground-level enclosed parking/storage for safety vehicles and equipment, and restrooms as described and identified by size, dimension, quantity, type, and location on the approved exhibits, dated September 27, 2006, on file in the Development Services Department.

The project or facility shall include:

a. Demolition of an existing South Mission Beach Lifeguard Station, construction of a replacement 3,125 square-foot lifeguard station with third-story observation tower, first aid room, a reception area, ground-level enclosed parking/storage for safety vehicles and equipment, and restrooms.

b. Landscaping (planting, irrigation and landscape related improvements).

c. Accessory improvements determined by the City Manager to be consistent with the land use and development standards in effect for this site per the adopted community plan, California Environmental Quality Act Guidelines, public and private improvement

ORIGINAL

requirements of the City Engineer, the underlying zone(s), conditions of this Permit, and any other applicable regulations of the SDMC in effect for this site.

STANDARD REQUIREMENTS:

1. Construction, grading or demolition must commence and be pursued in a diligent manner within thirty-six months after the effective date of final approval by the City, following all appeals. Failure to utilize the permit within thirty-six months will automatically void the permit unless an Extension of Time has been granted. Any such Extension of Time must meet all the SDMC requirements and applicable guidelines in effect at the time the extension is considered by the appropriate decision maker.

2. No permit for the construction, occupancy or operation of any facility or improvement described herein shall be granted, nor shall any activity authorized by this Permit be conducted on the premises until:

   a. The Permittee signs and returns the Permit to the Development Services Department; and

   b. The Permit is recorded in the Office of the San Diego County Recorder.

3. Unless this Permit has been revoked by the City of San Diego the property included by reference within this Permit shall be used only for the purposes and under the terms and conditions set forth in this Permit unless otherwise authorized by the City Manager.

4. This Permit is a covenant running with the subject property and shall be binding upon the Permittee and any successor or successors, and the interests of any successor shall be subject to each and every condition set out in this Permit and all referenced documents.

5. The utilization and continued use of this Permit shall be subject to the regulations of this and any other applicable governmental agency.

6. Issuance of this Permit by the City of San Diego does not authorize the Permittee for this permit to violate any Federal, State or City laws, ordinances, regulations or policies including, but not limited to, the Endangered Species Act of 1973 [ESA] and any amendments thereto (16 U.S.C. § 1531 et seq.).

7. The Owner/Permittee shall secure all necessary building permits. The applicant is informed that to secure these permits, substantial modifications to the building and site improvements to comply with applicable building, fire, mechanical and plumbing codes and State law requiring access for disabled people may be required.

8. Before issuance of any building or grading permits, complete grading and working drawings shall be submitted to the City Manager for approval. Plans shall be in substantial conformity to Exhibit "A," on file in the Development Services Department. No changes,

ORIGINAL

modifications or alterations shall be made unless appropriate application(s) or amendment(s) to this Permit have been granted.

9. All of the conditions contained in this Permit have been considered and have been determined to be necessary in order to make the findings required for this Permit. It is the intent of the City that the holder of this Permit be required to comply with each and every condition in order to be afforded the special rights which the holder of the Permit is entitled as a result of obtaining this Permit.

10. In the event that any condition of this Permit, on a legal challenge by the Owner/Permittee of this Permit, is found or held by a court of competent jurisdiction to be invalid, unenforceable, or unreasonable, this Permit shall be void. However, in such an event, the Owner/Permittee shall have the right, by paying applicable processing fees, to bring a request for a new permit without the "invalid" conditions(s) back to the discretionary body which approved the Permit for a determination by that body as to whether all of the findings necessary for the issuance of the proposed permit can still be made in the absence of the "invalid" condition(s). Such hearing shall be a hearing de novo and the discretionary body shall have the absolute right to approve, disapprove, or modify the proposed permit and the condition(s) contained therein.

LANDSCAPE REQUIREMENTS:

11. In the event that the Landscape Plan and the Site Plan conflict, the Site Plan shall be revised to be consistent with the Landscape Plan such that landscape areas are consistent with the Exhibit "A," Landscape Development Plan.

12. No change, modification, or alteration shall be made to the project unless appropriate application or amendment of this Permit shall have been granted by the City.

13. Prior to issuance of any construction permits for structures (including shell), complete landscape and irrigation construction documents consistent with the Landscape Standards (including planting and irrigation plans, details and specifications) shall be submitted to the City Manager for approval. The construction documents shall be in substantial conformance with Exhibit "A," Landscape Development Plan, on file in the Office of Development Services.

14. Prior to final inspection, it shall be the responsibility of the Permittee or subsequent Owner to install all required landscape and obtain all required landscape inspections. The permittee or subsequent Owner will maintain all required landscape improvements, on a permanent basis, in accordance with the Land Development Code and Landscape Standards.

15. All required landscape shall be maintained in a disease, weed, and litter free condition at all times. Severe pruning or "topping" of trees is not permitted. The trees shall be maintained in a safe manner to allow each tree to grow to its mature height and spread.

16. If any required landscape (including existing or new plantings, hardscape, landscape features, etc.) indicated on the approved construction document plans is damaged or removed during demolition or construction, it shall be repaired and/or replaced in kind and equivalent size

ORIGINAL

per the approved documents to the satisfaction of the City Manager within 30 days of damage or Certificate of Occupancy.

17. Invasive species are prohibited from being planted adjacent to any, water course, wet land or native habitats within the city limits of San Diego. Invasive plants are those which rapidly self propagate by air born seeds or trailing as noted in section 1.3 of the Landscape Standards.

PLANNING/DESIGN REQUIREMENTS:

18. There shall be compliance with the regulations of the underlying zone(s) unless a deviation or variance to a specific regulation(s) is approved or granted as a condition of approval of this Permit. Where there is a conflict between a condition (including exhibits) of this Permit and a regulation of the underlying zone, the regulation shall prevail unless the condition provides for a deviation or variance from the regulations. Where a condition (including exhibits) of this Permit establishes a provision which is more restrictive than the corresponding regulation of the underlying zone, then the condition shall prevail.

19. The height(s) of the building(s) or structure(s) shall not exceed those heights set forth in the conditions and the exhibits (including, but not limited to, elevations and cross sections) or the maximum permitted building height of the underlying zone, whichever is lower, unless a deviation or variance to the height limit has been granted as a specific condition of this Permit.

20. A topographical survey conforming to the provisions of the SDMC may be required if it is determined, during construction, that there may be a conflict between the building(s) under construction and a condition of this Permit or a regulation of the underlying zone. The cost of any such survey shall be borne by the Permittee.

21. Any future requested amendment to this Permit shall be reviewed for compliance with the regulations of the underlying zone(s) which are in effect on the date of the submittal of the requested amendment.

22. All private outdoor lighting shall be shaded and adjusted to fall on the same premises where such lights are located and in accordance with the applicable regulations in the SDMC.

23. The use of textured or enhanced paving shall meet applicable City standards as to location, noise and friction values.

24. The subject property and associated common areas on site shall be maintained in a neat and orderly fashion at all times.

WATER REQUIREMENTS:

25. Prior to the issuance of any building permits, the Owner/Permittee shall apply for a plumbing permit for the installation of appropriate private back flow prevention device(s) on each water service (domestic, fire, and irrigation), in a manner satisfactory to the Water

ORIGINAL

Department Director, the City Engineer, and the Cross Connection Supervisor in the Customer Support Division of the Water Department.

26. Prior to the issuance of any certificates of occupancy, public water facilities necessary to serve the development, including services, shall be complete and operational in a manner satisfactory to the Water Department Director and the City Engineer.

27. The Owner/Permittee agrees to design and construct all proposed public water facilities in accordance with established criteria in the most current edition of the City of San Diego Water Facility Design Guidelines and City regulations, standards and practices pertaining thereto. Public water facilities shall be modified at final engineering to comply with standards.

WASTEWATER REQUIREMENTS:

28. All proposed sewer facilities will be privately maintained by the Park and Recreation Department.

29. No structures or landscaping that would inhibit access shall be installed in or over any public sewer main or its access easement.

30. No trees or shrubs exceeding three feet in height at maturity shall be located within ten feet of any public sewer facilities.

31. The developer shall design and construct any proposed public sewer facilities to the most current edition of the City of San Diego's Sewer Design Guide.

32. Proposed private underground sewer facilities shall be designed to meet the requirements of the California Uniform Plumbing Code and shall be reviewed as part of the building permit plan check.

INFORMATION ONLY:

Any party, on whom fees, dedications, reservations, or other exactions have been imposed as conditions of approval of this development permit, may protest the imposition within ninety days of the approval of this development permit by filing a written protest with the City Clerk pursuant to California Government Code section 66020.

APPROVED by the Hearing Officer of the City of San Diego on September 27, 2006.

ORIGINAL

Permit Type/PTS Approval No.: Site Development Permit No. 197971
Date of Approval: September 27, 2006

AUTHENTICATED BY THE CITY OF SAN DIEGO DEVELOPMENT SERVICES DEPARTMENT

Patricia Grabski
Development Project Manager

NOTE: Notary acknowledgment must be attached per Civil Code section 1189 et seq.

The undersigned Owner/Permittee, by execution hereof, agrees to each and every condition of this Permit and promises to perform each and every obligation of Owner/Permittee hereunder.

Engineering and Capital Projects Department
Owner/Permittee

By J. F. Sleiman.
Jihad Sleiman
Project Manager

NOTE: Notary acknowledgments must be attached per Civil Code section 1189 et seq.

ORIGINAL

CALIFORNIA ALL-PURPOSE ACKNOWLEDGMENT

State of California
County of San Diego }

On May 10, 2011 (Date) before me, Stacie L. Maxwell, Notary Public (Here Insert Name and Title of the Officer)

personally appeared Patricia Graboski (Name(s) of Signer(s))

who proved to me on the basis of satisfactory evidence to be the person(s) whose name(s) is/~~are~~ subscribed to the within instrument and acknowledged to me that ~~he~~/she/~~they~~ executed the same in ~~his~~/her/~~their~~ authorized capacity(~~ies~~), and that by ~~his~~/her/~~their~~ signature(s) on the instrument the person(s), or the entity upon behalf of which the person(s) acted, executed the instrument.

I certify under PENALTY OF PERJURY under the laws of the State of California that the foregoing paragraph is true and correct.

WITNESS my hand and official seal.

Signature _____ (Signature of Notary Public)

STACIE L. MAXWELL
Commission # 1810493
Notary Public - California
San Diego County
My Comm. Expires Aug 22, 2012

Place Notary Seal Above

OPTIONAL

Though the information below is not required by law, it may prove valuable to persons relying on the document and could prevent fraudulent removal and reattachment of this form to another document.

Description of Attached Document

Title or Type of Document: South Mission Beach Lifeguard Station PTS 19797

Document Date: _____ Number of Pages: _____

Signer(s) Other Than Named Above: _____

Capacity(ies) Claimed by Signer(s)

Signer's Name: _____
☐ Individual
☐ Corporate Officer — Title(s): _____
☐ Partner — ☐ Limited ☐ General
☐ Attorney in Fact
☐ Trustee
☐ Guardian or Conservator
☐ Other: _____
Signer Is Representing: _____

RIGHT THUMBPRINT OF SIGNER
Top of thumb here

Signer's Name: _____
☐ Individual
☐ Corporate Officer — Title(s): _____
☐ Partner — ☐ Limited ☐ General
☐ Attorney in Fact
☐ Trustee
☐ Guardian or Conservator
☐ Other: _____
Signer Is Representing: _____

RIGHT THUMBPRINT OF SIGNER
Top of thumb here

©2007 National Notary Association • 9350 De Soto Ave., P.O. Box 2402 • Chatsworth, CA 91313-2402 • www.NationalNotary.org Item #5907 Reorder: Call Toll-Free 1-800-876-6827

ORIGINAL

CALIFORNIA ALL-PURPOSE ACKNOWLEDGMENT

State of California
County of San Diego }

On May 10, 2011 (Date) before me, Stacie L. Maxwell, Notary Public, (Here Insert Name and Title of the Officer)

personally appeared Jihad Slaiman (Name(s) of Signer(s))

who proved to me on the basis of satisfactory evidence to be the person(s) whose name(s) is/~~are~~ subscribed to the within instrument and acknowledged to me that he/~~she/they~~ executed the same in his/~~her/their~~ authorized capacity(~~ies~~), and that by his/~~her/their~~ signature(s) on the instrument the person(s), or the entity upon behalf of which the person(s) acted, executed the instrument.

I certify under PENALTY OF PERJURY under the laws of the State of California that the foregoing paragraph is true and correct.

WITNESS my hand and official seal.

Signature _____ (Signature of Notary Public)

STACIE L. MAXWELL
Commission # 1810493
Notary Public - California
San Diego County
My Comm. Expires Aug 22, 2012

Place Notary Seal Above

OPTIONAL

Though the information below is not required by law, it may prove valuable to persons relying on the document and could prevent fraudulent removal and reattachment of this form to another document.

Description of Attached Document

Title or Type of Document: South Mission Beach Lifeguard Station

Document Date: _____ Number of Pages: _____

Signer(s) Other Than Named Above: _____

Capacity(ies) Claimed by Signer(s)

Signer's Name: _____
☐ Individual
☐ Corporate Officer — Title(s): _____
☐ Partner — ☐ Limited ☐ General
☐ Attorney in Fact
☐ Trustee
☐ Guardian or Conservator
☐ Other: _____
Signer Is Representing: _____

RIGHT THUMBPRINT OF SIGNER
Top of thumb here

Signer's Name: _____
☐ Individual
☐ Corporate Officer — Title(s): _____
☐ Partner — ☐ Limited ☐ General
☐ Attorney in Fact
☐ Trustee
☐ Guardian or Conservator
☐ Other: _____
Signer Is Representing: _____

RIGHT THUMBPRINT OF SIGNER
Top of thumb here

©2007 National Notary Association • 9350 De Soto Ave., P.O. Box 2402 • Chatsworth, CA 91313-2402 • www.NationalNotary.org Item #5907 Reorder: Call Toll-Free 1-800-876-6827

HEARING OFFICER
RESOLUTION NO. 5944
SITE DEVELOPMENT PERMIT NO. 197971
SOUTH MISSION BEACH LIFEGUARD STATION

WHEREAS, THE ENGINEERING AND CAPITAL PROJECTS DEPARTMENT, Owner/Permittee, filed an application with the City of San Diego for a permit to demolish the existing South Mission Beach Lifeguard Station and construct a replacement 3,125 square-foot lifeguard station with third-story observation tower, first aid room, a reception area, ground-level enclosed parking/storage for safety vehicles and equipment, and restrooms (as described in and by reference to the approved Exhibits "A" and corresponding conditions of approval for the associated Permit No. 197971 on portions of a 9.79-acre site;

WHEREAS, the project site is located at 700, North Jetty Road in the R-S, R2B, and R2 Zones of the Mission Beach Community Plan Area;

WHEREAS, the project site is legally described as Block No. 6801, Mission Beach, Map No. 1809;

WHEREAS, on September 27, 2006, the Hearing Officer of the City of San Diego considered Site Development Permit No 197971, pursuant to the Land Development Code of the City of San Diego; NOW, THEREFORE,

BE IT RESOLVED by the Hearing Officer of the City of San Diego as follows:

That the Hearing Officer adopts the following written Findings, dated September 27, 2006.

FINDINGS:

Site Development Permit - Section 126.0504

A. Findings for all Site Development Permits

1. The proposed development will not adversely affect the applicable land use plan;

The project would demolish an existing lifeguard tower and construct a new lifeguard tower at South Mission Beach. The Mission Beach Precise Plan does not specify a land use designation for the project area. However, the Plan requires that open space be preserved and that views to and along the shoreline from public areas be protected from blockage by development and or vegetation. The proposed new lifeguard station would be a public safety accessory use supporting the beach open space and has been designed to minimize blockage of public views. The station would be constructed in an orientation perpendicular to the shoreline, and, therefore, would present its narrowest dimension to the public view areas to the east of the project site. As

ORIGINAL

the project would support the open space preservation called for in the Precise Plan and has been designed to minimize public view blockage, the proposal is consistent with the Precise Plan. Therefore, the proposed development will not adversely affect the applicable land use plan.

2. The proposed development will not be detrimental to the public health, safety, and welfare; and

The project would demolish an existing lifeguard tower and construct a new lifeguard tower at South Mission Beach. As its primary objective, a new, state-of-the-art lifeguard station fully supports and promotes the safety, health and welfare of the public. The project is an enhancement to the public welfare in that it would encourage increased public use of the beach and the resources provided by this coastal community. The project would improve beach accessibility and enhance the areas recreational opportunities. While providing improved safety to beachgoers, the project has been designed to minimize impacts to public views. The station would be constructed in an orientation perpendicular to the shoreline, and, therefore, would present its narrowest dimension to the public view areas to the east of the project site. The Negative Declaration prepared for this project evaluated the visual quality issue and concluded that the project would not have a significant impact to public views, and that no mitigation would be required.

The Negative Declaration also examined potential geologic hazards associated with the project and concluded that proper engineering design of all new structures would ensure that the potential for geologic impacts from regional hazards would not be significant, and that no mitigation would be required. Compliance with the City's Stormwater Regulation would be required during construction activities and would include silt fencing, the covering of all storm drain inlets with filter cloth and sand bags, and the placement of mud guards at the entrance to the construction site. As the proposal has addressed health, safety and welfare issues including visual, geologic and water quality aspects of the project, and concluded there are no significant impacts, the proposed development will enhance public health, safety and welfare.

3. The proposed development will comply with the applicable regulations of the Land Development Code.

The project would demolish an existing lifeguard tower and construct a new lifeguard tower at South Mission Beach. The project complies with the applicable Land Development Code regulations, including building heights, landscaping and parking requirements. The project has addressed all required water quality issues through the project review, describing the type of all pollutants which would be generated during post-construction and the pollutants to be captured and treated by the proposed Best Management Practices. The project would also comply with City's Stormwater Regulation. As the project would comply with building height, landscaping, parking and water quality requirements, the proposed lifeguard station would comply with the applicable regulations of the Land Development Code.

ORIGINAL

B. Supplemental Findings--Environmentally Sensitive Lands

1. The site is physically suitable for the design and siting of the proposed development and the development will result in minimum disturbance to environmentally sensitive lands;

The project would demolish an existing lifeguard tower and construct a new lifeguard tower at South Mission Beach. The site for the new construction is approximately 80 feet to the north of the existing lifeguard tower. The proposed site is immediately adjacent to an existing green recreation space and was selected to minimize any disturbance to the beach area. The site will require minimal grading and would allow for the perpendicular orientation to the beach, which would minimize impacts to public views. As the site would allow the new lifeguard station to be located near previously disturbed areas, and would allow the project to be oriented to preserve public views, the project is physically suitable for the design and siting of the proposed development and the development will result in minimum disturbance to environmentally sensitive lands.

2. The proposed development will minimize the alteration of natural land forms and will not result in undue risk from geologic and erosional forces, flood hazards, or fire hazards;

The project would demolish an existing lifeguard tower and construct a new lifeguard tower at South Mission Beach. There are no prominent natural landforms near or on the proposed site. The project would minimally altering existing topography and drainage patterns since the existing site is relatively flat. Therefore, erosional forces and flood hazards would not be increased. Based on the nature of the proposed construction, no increase in fire hazard is anticipated. The project would implement permanent construction Best Management Practices as required by the City of San Diego. Because of the project's relatively small size and distance from the beach, additional erosion of the beach or impacts to the local shoreline sand supply is not anticipated. Geologic review determined that the project has adequately addressed geologic conditions potentially affecting the project. Through project review, staff has determined there would be no erosional forces, flood hazards or fire hazards. Therefore, the proposed development would minimally alter the site would not result in undue risk from geologic and erosional forces, flood hazards, or fire hazards.

3. The proposed development will be sited and designed to prevent adverse impacts on any adjacent environmentally sensitive lands;

The project would demolish an existing lifeguard tower and construct a new lifeguard tower at South Mission Beach. The new lifeguard station would be constructed approximately 80 feet north of the existing tower and would be constructed slightly farther from the shoreline. The new station would be constructed in an orientation perpendicular to the shoreline, and, therefore, this design would present its narrowest dimension to the public view areas to the east of the project site. This would help preserve public views to the environmentally sensitive resource (coastal beaches). The project is also proposed to be located adjacent to the existing green space and

ORIGINAL

would be connected to the existing parking lot by an accessible pathway. In this way, the new lifeguard station would minimize any new disturbance to other coastal beach areas while improving safety and security. Therefore, the proposed development would be sited and designed to prevent adverse impacts on any adjacent environmentally sensitive lands.

4. **The proposed development will be consistent with the City of San Diego's Multiple Species Conservation Program (MSCP) Subarea Plan;**

The project would demolish an existing lifeguard tower and construct a new lifeguard tower at South Mission Beach. The project is not located in or near the Multiple Species Conservation Program (MSCP) Subarea. Therefore, the proposed development will be consistent with the City of San Diego's Multiple Species Conservation Program (MSCP) Subarea Plan.

5. **The proposed development will not contribute to the erosion of public beaches or adversely impact local shoreline sand supply; and**

The project would demolish an existing lifeguard tower and construct a new lifeguard tower at South Mission Beach. The project's direct run-off would be discharged to an existing storm drain located adjacent to the project site. Because of the project's relatively small size and distance from the beach, additional erosion of the beach or impacts to the local shoreline sand supply is not anticipated. The project would comply with current Best Management Practices during construction. As such, the development would reduce pollutants discharged from the project site to the maximum extent practicable. Therefore, the proposed development will not contribute to the erosion of public beaches or adversely impact local shoreline sand supply.

6. **The nature and extent of mitigation required as a condition of the permit is reasonably related to, and calculated to alleviate, negative impacts created by the proposed development.**

The project would demolish an existing lifeguard tower and construct a new lifeguard tower at South Mission Beach. No mitigation is required of this project. Therefore, the nature and extent of mitigation required as a condition of the permit is reasonably related to, and calculated to alleviate, negative impacts created by the proposed development.

BE IT FURTHER RESOLVED that, based on the findings hereinbefore adopted by the Hearing Officer, Site Development Permit No. 197971 is hereby GRANTED by the Hearing Officer to the referenced Owner/Permittee, in the form, exhibits, terms and conditions, as set forth in Permit No. 197971, a copy of which is attached hereto and made a part hereof.

Patricia Grabski

Patricia Grabski
Development Project Manager
Development Services

ORIGINAL

Development Services

Adopted on: September 27, 2006

Job Order No. 335040

cc: Legislative Recorder, Planning Department

ORIGINAL

APPENDIX B

MATERIALS TYPICALLY ACCEPTED BY CERTIFICATE OF COMPLIANCE

Materials Typically Accepted by Certificate of Compliance

1. Soil amendment
2. Fiber mulch
3. PVC or PE pipe up to 16 inch diameter
4. Stabilizing emulsion
5. Lime
6. Preformed elastomeric joint seal
7. Plain and fabric reinforced elastomeric bearing pads
8. Steel reinforced elastomeric bearing pads
9. Waterstops (Special Condition)
10. Epoxy coated bar reinforcement
11. Plain and reinforcing steel
12. Structural steel
13. Structural timber and lumber
14. Treated timber and lumber
15. Lumber and timber
16. Aluminum pipe and aluminum pipe arch
17. Corrugated steel pipe and corrugated steel pipe arch
18. Structural metal plate pipe arches and pipe arches
19. Perforated steel pipe
20. Aluminum underdrain pipe
21. Aluminum or steel entrance tapers, pipe downdrains, reducers, coupling bands and slip joints
22. Metal target plates
23. Paint (traffic striping)
24. Conductors
25. Painting of electrical equipment
26. Electrical components
27. Engineering fabric
28. Portland Cement
29. PCC admixtures
30. Minor concrete, asphalt
31. Asphalt (oil)
32. Liquid asphalt emulsion
33. Epoxy

APPENDIX C

SAMPLE CITY INVOICE

City of San Diego, Field Engineering Div., 9485 Aero Drive, SD CA 92123					Contractor's Name:					
Project Name:					Contractor's Address:					
Work Order No or Job Order No.										
City Purchase Order No.					Contractor's Phone #:				Invoice No.	
Resident Engineer (RE):					Contractor's Fax #:				Invoice Date:	
RE Phone#:		RE Fax#:			Contact Name:				Billing Period:	
Item #	Item Description	Contract Authorization				Previous Estimate		This Estimate		Totals to Date	
		Unit	Qty	Price	Extension	%/QTY	Amount	% / QTY	Amount	% / QTY	Amount
1	2 Parallel 4" PVC C900	LF	1,380	$34.00	$46,920.00						
2	48" Primary Steel Casing	LF	500	$1,000.00	$500,000.00						
3	2 Parallel 12" Secondary Steel	LF	1,120	$53.00	$59,360.00						
4	Construction and Rehab of PS 49	LS	1	$150,000.00	$150,000.00						
5	Demo	LS	1	$14,000.00	$14,000.00						
6	Install 6' High Chain Link Fence	LS	1	$5,600.00	$5,600.00						
7	General Site Restoration	LS	1	$3,700.00	$3,700.00						
8	10" Gravity Sewer	LF	10	$292.00	$2,920.00						
9	4" Blow Off Valves	EA	2	$9,800.00	$19,600.00						
10	Bonds	LS	1	$16,000.00	$16,000.00						
11	Field Orders	AL	1	80,000	$80,000.00						
11.1	**Field Order 1**	**LS**	**5,500**	**$1.00**	$5,500.00						
11.2	**Field Order 2**	**LS**	**7,500**	**$1.00**	$7,500.00						
11.3	**Field Order 3**	**LS**	**10,000**	**$1.00**	$10,000.00						
11.4	**Field Order 4**	**LS**	**6,500**	**$1.00**	$6,500.00						
12	**Certified Payroll**	**LS**	**1**	**$1,400.00**	$1,400.00						
CHANGE ORDERS											
Change Order 1		**4,890**									
Items 1-4					**$11,250.00**						
Item 5-Deduct Bid Item 3		**LF**	**120**	**-$53.00**	**($6,360.00)**						
Change Order 2		**160,480**									
Items 1-3					**$95,000.00**						
Item 4 Deduct Bid Item 1		**LF**	**380**	**-$340.00**	**($12,920.00)**						
Item 5-Encrease bid Item 9		**LF**	**8**	**$9,800.00**	**$78,400.00**						
Change Order 3 (Close Out)		**-121,500**									
Item 1 Deduct Bid Item 3			**53**	**-500.00**	**($26,500.00)**						
Item 2 Deduct Bid Item 4		**LS**	**-1**	**45,000.00**	**($45,000.00)**						
Items 3-9			**1**	**-50,500.00**	**($50,500.00)**						
SUMMARY								Total This	$ -	**Total Billed**	$0.00
A. Original Contract Amount							**Retention and/or Escrow Payment Schedule**				
B. Approved Change Order 1 Thru 3							Total Retention Required as of this billing				
C. Total Authorized Amount (A+B)							Previous Retention Withheld in PO or in Escrow				
D. Total Billed to Date							Add'l Amt to Withhold in PO/Transfer in Escrow:				
E. Less Total Retention (5% of D)							Amt to Release to Contractor from PO/Escrow:				
F. Less Total Previous Payments											
G. Payment Due Less Retention						**Contractor Signature and Date:**					
H. Remaining Authorized Amount											

APPENDIX D

LOCATION MAP

THIS MAP/DATA IS PROVIDED WITHOUT WARRANTY OF ANY KIND, EITHER EXPRESS OR IMPLIED, INCLUDING, BUT NOT LIMITED TO, THE IMPLIED WARRANTIES OR MERCHANTABILITY AND FITNESS FOR A PARTICULAR PURPOSE. Note: This product may contain information from the SANDAG Regional Information System which cannot be reproduced without the written permission of SANDAG. This product may contain information reproduce with permission granted by RAND MCNALLY & COMPANY©to SanGIS. This map is copyrighted by RAND MCNALLY & COMPANY© It is unlawful to copy or reproduce all or any part therof, whether for personal use or resale, without the prior, written permission of RAND MCNALLY & COMPANY.

SOUTH MISSION BEACH STATION

SENIOR ENGINEER
ELIF CETIN
(619) 533-4640

PROJECT MANAGER
JIHAD SLEIMAN
(619) 533-7532

PROJECT ENGINEER
JORGE ACEVEDO
(619) 533-4658

PROJECT INFORMATION OFFICER
(619) 533-4207

CITY OF SAN DIEGO
Engineering & Capital Projects Department
Architectural Engineering and Parks Division

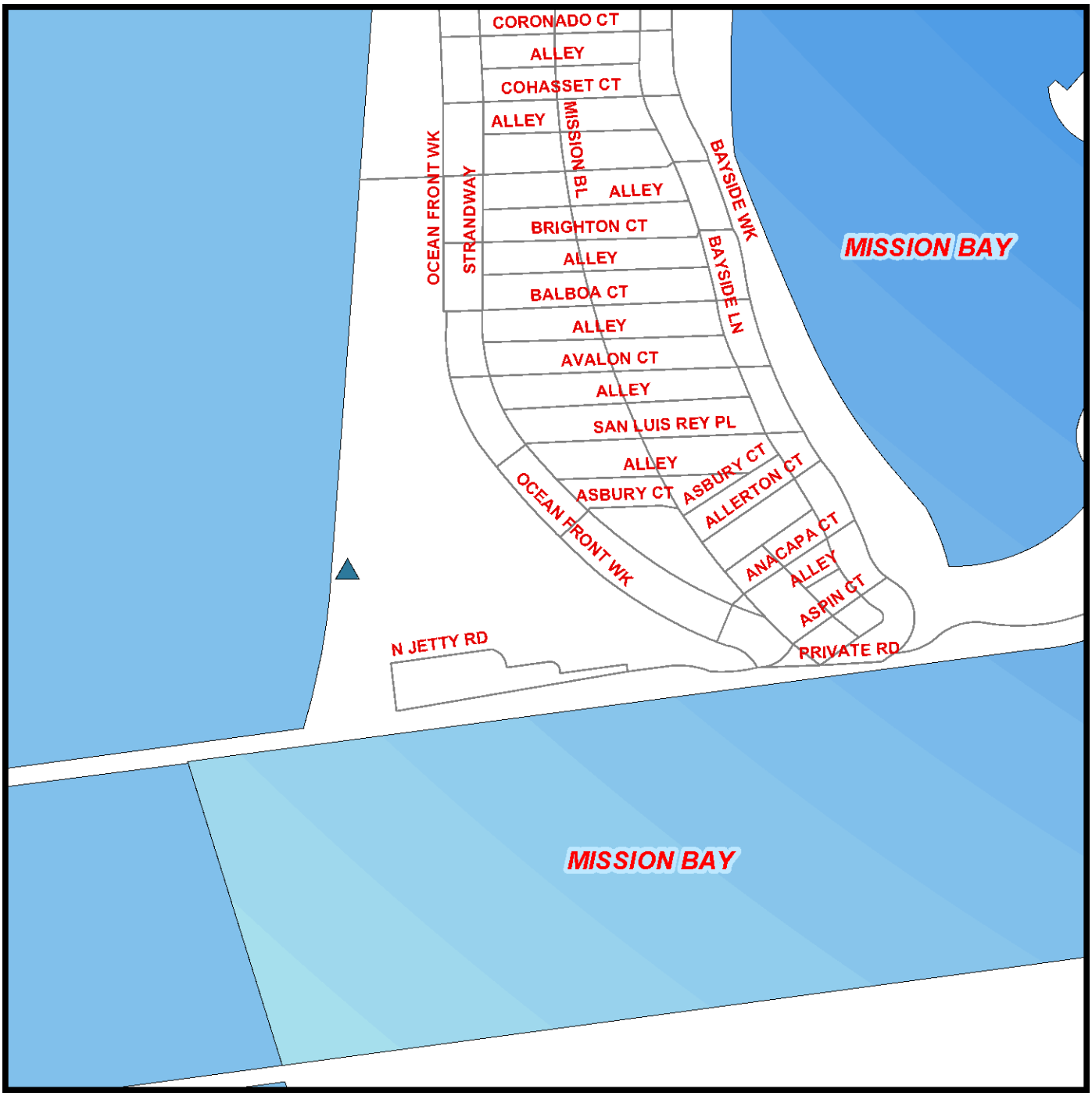

Legend

▲ S00791, SOUTH MISSION BEACH STATION

N
W E
S
No Scale

COMM. NAME: MISSION BEACH
South Mission Beach Lifeguard Station
Date: September 16, 2013

COUNCIL DISTRICT: 2

SAP ID: S00791

APPENDIX E

ADJACENT PROJECTS

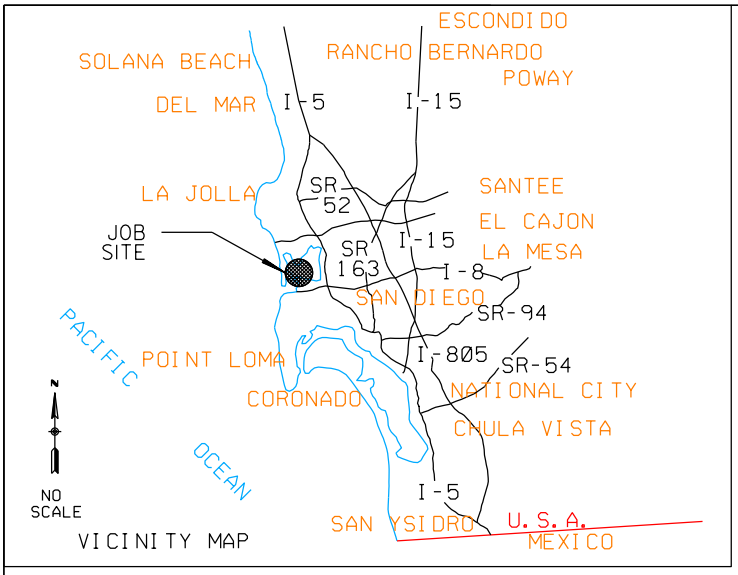

VICINITY MAP

CITY OF SAN DIEGO
PUBLIC WORKS
DEPARTMENT

Engineering & Capital Projects

SENIOR ENGINEER
CARL E. SPIER, P.E.
@ 533-5126

PROJECT MANAGER
BIJAN SHAKIBA
@ 533-5191

PROJECT ENGINEER
SHEILA GAMUEDA
@ 533-5227

SEWER & WATER MAIN REPLACEMENT GROUP 815 LOCATION MAP

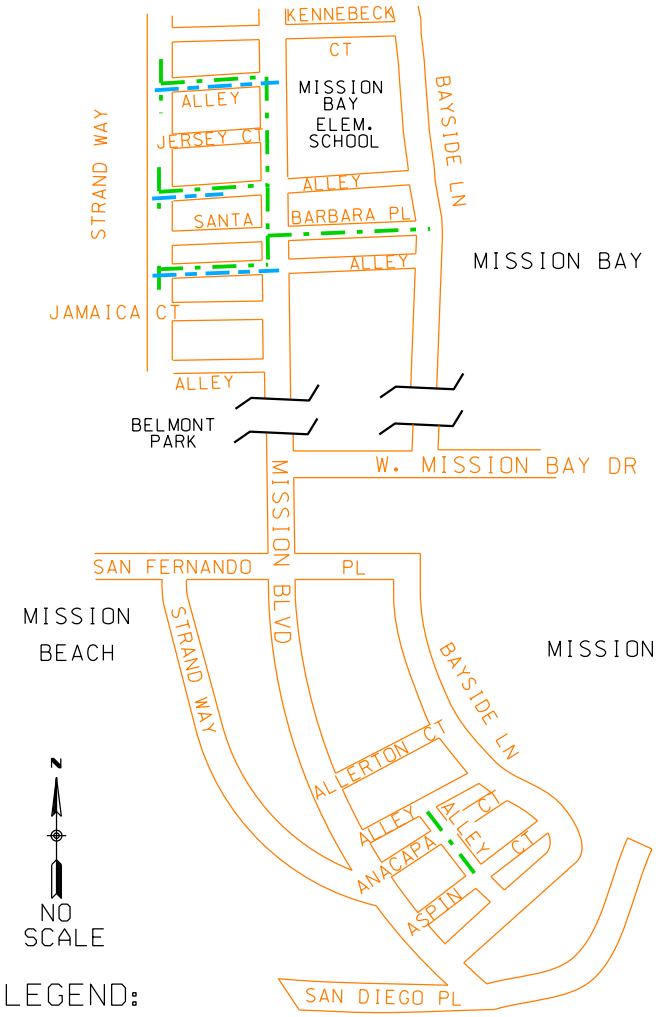

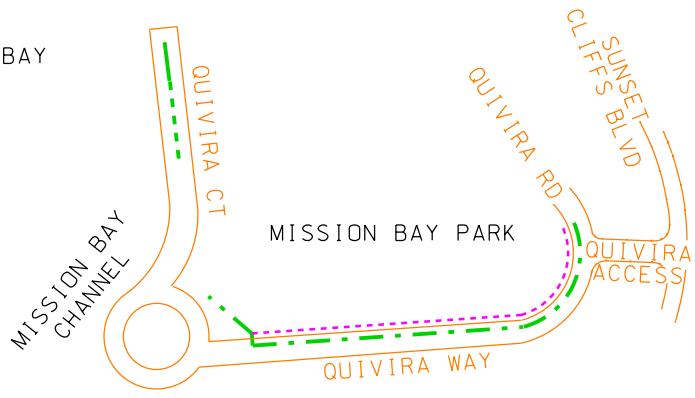

LEGEND:

- WATER MAIN REPLACEMENT
- SEWER MAIN REPLACEMENT
- SEWER MAIN POINT REPAIR
- SEWER MAIN REHAB
- SEWER MAIN ABANDONMENT

11-27-12 CK

COMMUNITY PLAN: MISSION BEACH, MISSION BAY PARK ● COUNCIL DISTRICT 02 ● WBS# B-00415(S)/B-12045(W)

Here is the IMCAT screen shot of UU977 South Mission Beach Block 2S1. You are welcome to add my information and our PIO Tim Graham, as contacts for your contractor.

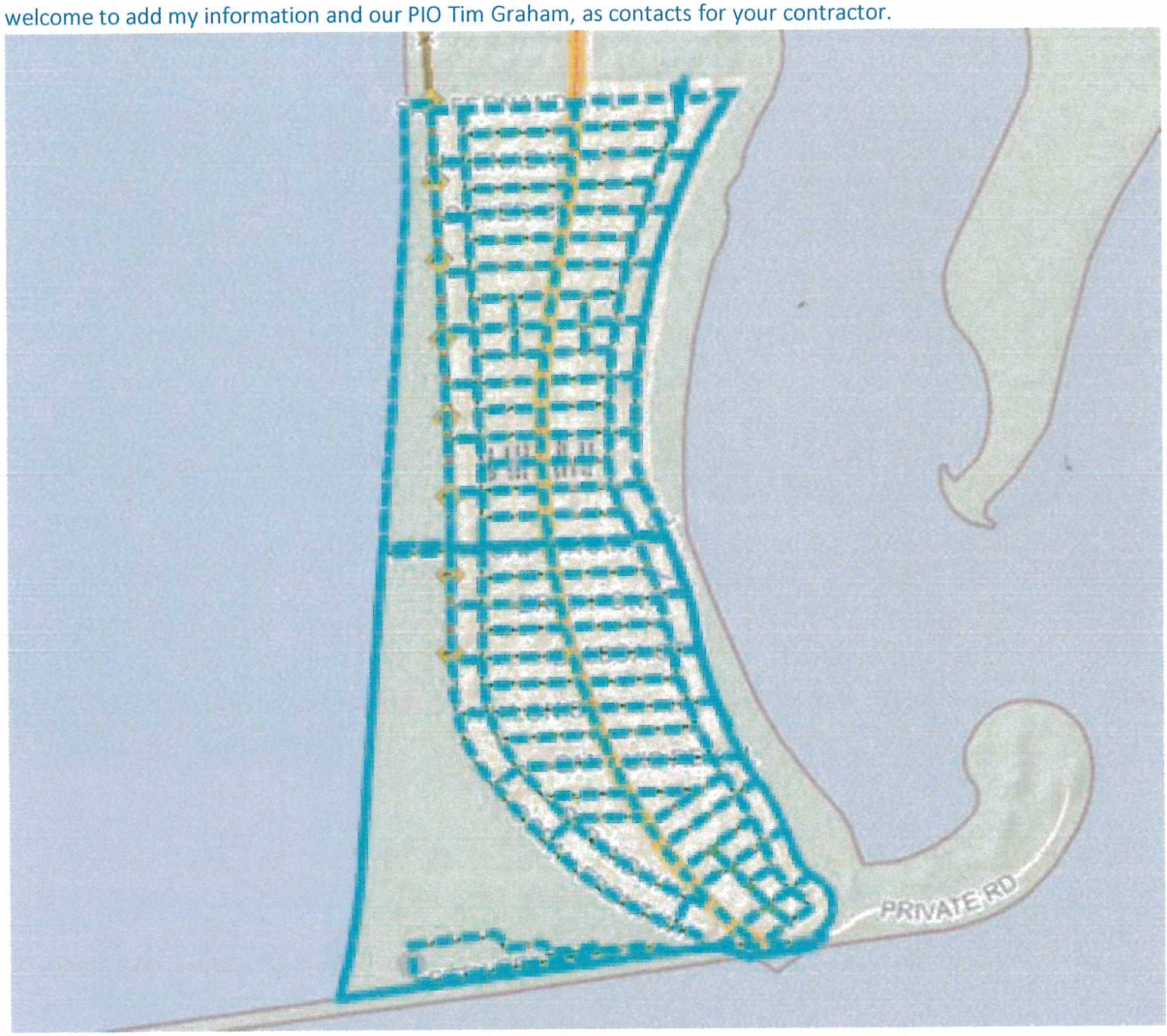

Mario

APPENDIX F

HAZARDOUS LABELS/FORMS

INCIDENT/RELEASE ASSESSMENT FORM [1]

If you have an emergency, Call 911

Handlers of hazardous materials are required to report releases. The following is a tool to be used for assessing if a release is reportable. Additionally, a non-reportable release incident form is provided to document why a release is not reported (see back).

Questions for Incident Assessment:		YES	NO
1.	Was anyone killed or injured, or did they require medical care or admitted to a hospital for observation?	❒	❒
2.	Did anyone, other than employees in the immediate area of the release, evacuate?	❒	❒
3.	Did the release cause off-site damage to public or private property?	❒	❒
4.	Is the release greater than or equal to a reportable quantity (RQ)?	❒	❒
5.	Was there an uncontrolled or unpermitted release to the air?	❒	❒
6.	Did an uncontrolled or unpermitted release escape secondary containment, or extend into any sewers, storm water conveyance systems, utility vaults and conduits, wetlands, waterways, public roads, or off site?	❒	❒
7.	Will control, containment, decontamination, and/or clean up require the assistance of federal, state, county, or municipal response elements?	❒	❒
8.	Was the release or threatened release involving an unknown material or contains an unknown hazardous constituent?	❒	❒
9.	Is the incident a threatened release (a condition creating a substantial probability of harm that requires immediate action to prevent, reduce, or mitigate damages to persons, property, or the environment)?	❒	❒
10.	Is there an increased potential for secondary effects including fire, explosion, line rupture, equipment failure, or other outcomes that may endanger or cause exposure to employees, the general public, or the environment?	❒	❒

If the answer is YES to any of the above questions – report the release to the California Office of Emergency Services at 800-852-7550 and the local CUPA daytime: (619) 338-2284, after hours: (858) 565-5255. Note: other state and federal agencies may require notification depending on the circumstances.

Call 911 in an emergency

If all answers are NO, complete a Non Reportable Release Incident Form (page 2 of 2) and keep readily available. Documenting why a "no" response was made to each question will serve useful in the event questions are asked in the future, and to justify not reporting to an outside regulatory agency.

If in doubt, report the release.

[1] This document is a guide for accessing when hazardous materials release reporting is required by Chapter 6.95 of the California Health and Safety Code. It does not replace good judgment, Chapter 6.95, or other state or federal release reporting requirements.

NON REPORTABLE RELEASE INCIDENT FORM

1. RELEASE AND RESPONSE DESCRIPTION Incident #_____

Date/Time Discovered	Date/Time Discharge	Discharge Stopped ☐ Yes ☐ No
Incident Date / Time:		
Incident Business / Site Name:		
Incident Address:		
Other Locators (Bldg, Room, Oil Field, Lease, Well #, GIS)		
Please describe the incident and indicate specific causes and area affected. Photos Attached?: ☐Yes ☐No		
Indicate actions to be taken to prevent similar releases from occurring in the future.		

2. ADMINISTRATIVE INFORMATION

Supervisor in charge at time of incident:	Phone:
Contact Person:	Phone:

3. CHEMICAL INFORMATION

Chemical	Quantity ☐ GAL ☐ LBS ☐ FT^3
Chemical	Quantity ☐ GAL ☐ LBS ☐ FT^3
Chemical	Quantity ☐ GAL ☐ LBS ☐ FT^3
Clean-Up Procedures & Timeline:	
Completed By:	Phone:
Print Name:	Title:

EMERGENCY RELEASE FOLLOW - UP NOTICE REPORTING FORM

A

BUSINESS NAME	FACILITY EMERGENCY CONTACT & PHONE NUMBER ( ) -

B

INCIDENT DATE MO DAY YR	TIME OES NOTIFIED (use 24 hr time)	OES CONTROL NO.

C

INCIDENT ADDRESS LOCATION	CITY / COMMUNITY	COUNTY ZIP

D

CHEMICAL OR TRADE NAME (print or type)	CAS Number

CHECK IF CHEMICAL IS LISTED IN 40 CFR 355, APPENDIX A ☐	CHECK IF RELEASE REQUIRES NOTIFI - CATION UNDER 42 U.S.C. Section 9603 (a) ☐

PHYSICAL STATE CONTAINED ☐ SOLID ☐ LIQUID ☐ GAS	PHYSICAL STATE RELEASED ☐ SOLID ☐ LIQUID ☐ GAS	QUANTITY RELEASED

ENVIRONMENTAL CONTAMINATION ☐ AIR ☐ WATER ☐ GROUND ☐ OTHER	TIME OF RELEASE	DURATION OF RELEASE ___DAYS ___HOURS ___MINUTES

E

ACTIONS TAKEN

F

KNOWN OR ANTICIPATED HEALTH EFFECTS (Use the comments section for addition information)

☐ ACUTE OR IMMEDIATE (explain) _____

☐ CHRONIC OR DELAYED (explain) _____

☐ NOTKNOWN (explain)

G

ADVICE REGARDING MEDICAL ATTENTION NECESSARY FOR EXPOSED INDIVIDUALS

H

COMMENTS (INDICATE SECTION (A - G) AND ITEM WITH COMMENTS OR ADDITIONAL INFORMATION)

I

CERTIFICATION: I certify under penalty of law that I have personally examined and I am familiar with the information submitted and believe the submitted information is true, accurate, and complete.

REPORTING FACILITY REPRESENTATIVE (print or type) _____

SIGNATURE OF REPORTING FACILITY REPRESENTATIVE _____ DATE: _____

EMERGENCY RELEASE FOLLOW-UP NOTICE
REPORTING FORM INSTRUCTIONS

GENERAL INFORMATION:

Chapter 6.95 of Division 20 of the California Health and Safety Code requires that written emergency release follow-up notices prepared pursuant to 42 U.S.C. § 11004, be submitted using this reporting form. Non-permitted releases of reportable quantities of Extremely Hazardous Substances (listed in 40 CFR 355, appendix A) or of chemicals that require release reporting under section 103(a) of the Comprehensive Environmental Response, Compensation, and Liability Act of 1980 [42 U.S.C. § 9603(a)] must be reported on the form, as soon as practicable, but no later than 30 days, following a release. The written follow-up report is required in addition to the verbal notification.

BASIC INSTRUCTIONS:

- The form, when filled out, reports follow-up information required by 42 U.S.C § 11004. Ensure that all information requested by the form is provided as completely as possible.
- If the incident involves reportable releases of more than one chemical, prepare one report form for each chemical released.
- If the incident involves a series of separate releases of chemical(s) at different times, the releases should be reported on separate reporting forms.

SPECIFIC INSTRUCTIONS:

Block A: Enter the name of the business and the name and phone number of a contact person who can provide detailed facility information concerning the release.

Block B: Enter the date of the incident and the time that verbal notification was made to OES. The OES control number is provided to the caller by OES at the time verbal notification is made. Enter this control number in the space provided.

Block C: Provide information pertaining to the location where the release occurred. Include the street address, the city or community, the county and the zip code.

Block D: Provide information concerning the specific chemical that was released. Include the chemical or trade name and the Chemical Abstract Service (CAS) number. Check all categories that apply. Provide best available information on quantity, time and duration of the release.

Block E: Indicate all actions taken to respond to and contain the release as specified in 42 U.S.C. § 11004(c).

Block F: Check the categories that apply to the health effects that occurred or could result from the release. Provide an explanation or description of the effects in the space provided. Use Block H for additional comments/information if necessary to meet requirements specified in 42 U.S.C. § 11004(c).

Block G: Include information on the type of medical attention required for exposure to the chemical released. Indicate when and how this information was made available to individuals exposed and to medical personnel, if appropriate for the incident, as specified in 42 U.S.C. § 11004(c).

Block H: List any additional pertinent information.

Block I: Print or type the name of the facility representative submitting the report. Include the official signature and the date that the form was prepared.

MAIL THE COMPLETED REPORT TO:

State Emergency Response Commission (SERC)
Attn: Section 304 Reports
Hazardous Materials Unit
3650 Schriever Avenue
Mather, CA 95655

NOTE: Authority cited: Sections 25503, 25503.1 and 25507.1, Health and Safety Code. Reference: Sections 25503(b)(4), 25503.1, 25507.1, 25518 and 25520, Health and Safety Code.

ATTACHMENT F

INTENTIONALLY LEFT BLANK

City of San Diego

CITY CONTACT: Damian Singleton - Contract Specialist, Email:DSingleton@sandiego.gov
Phone No. (619) 533-3482, **Fax No**. (619) 533-3633

ADDENDUM "A"

FOR

SOUTH MISSION BEACH LIFEGUARD STATION

BID NO.: K-15-1180-DBB-3
SAP NO. (WBS/IO/CC): S-00791
CLIENT DEPARTMENT: 1912
COUNCIL DISTRICT: 2
PROJECT TYPE: BB

BID DUE DATE:
2:00 PM
NOVEMBER 20, 2014
CITY OF SAN DIEGO
PUBLIC WORKS CONTRACTS
1010 SECOND AVENUE, 14th FLOOR, MS 614C
SAN DIEGO, CA 92101

ENGINEER OF WORK

The engineering Specifications and Special Provisions contained herein have been prepared by or under the direction of the following Registered Engineer:

11/10/2014

1) Registered Architect — Date — Seal

11/10/2014

2) For City Engineer — Date — Seal:

A. CHANGES TO CONTRACT DOCUMENTS

The following changes to the Contract Documents are hereby made effective as though originally issued with the bid package. Bidders are reminded that all previous requirements to this solicitation remain in full force and effect.

B. CLARIFICATIONS

1. WBS Number "S-00793" is being revised to WBS Number "S-00791" throughout the Contract Documents as part of this addendum.

C. VOLUME 1

1. To Clarify the WBS Number, on the cover page, page 17, and page 25, **DELETE** in their entirety and **SUBSTITUTE** with pages 5 through 7 of this Addendum.

2. To Attachment E, Supplementary Special Provisions, page 39, Section 6 - Prosecution, Progress and Acceptance of Work, Item 6-2.1 Moratoriums, **ADD** the following:

   B During Summer Moratorium observation, Working days will not be counted towards construction contract time.

3. To Attachment E, Supplementary Special Provisions, page 63, Technicals, Section 01 02 50 – Measurement and Payment, Part 1 - General, Sub-section 1.3 Measurement and payment, B Contract Required Work, 11. Bid Item No. 11 – Dewatering (Lump Sum), **DELETE** in its entirety and **SUBSTITUTE** with:

   11. Bid Item No. 11 – Dewatering (Lump Sum):

   Refer to Technical section 02 14 00 and City Supplement section 705-2.7.

   The lump sum price for the cost of dewatering of South Mission Beach Lifeguard Station and other associated costs shall be considered as full compensation for furnishing, constructing, obtaining all required permits and all other work required to complete technical section 02 14 00 and City supplement section 705-2.7.

4. To Attachment E, Supplementary Special Provisions, page 283, Technicals, Section 08 71 01 – Door Hardware, Part 1 - General , Sub-section 2.8 Keying Requirements, **DELETE** in its entirety and **SUBSTITUTE** with:

   2.8 KEYING REQUIREMENTS:

   A. Key System:
      1. Provide Small Format Best Key System.
      2. Permanent Key system to be keyed by Contractor.

3. Construction keying: furnish and install temporary cores by Contractor.
4. Temporary cylinders/cores will become City Property.
5. Furnish 10 construction keys.
6. Furnish 2 construction control keys.
7. Temporary key cylinders: furnish 6-pin solid brass construction.

D. VOLUME 2

To Clarify the WBS Number, on the cover page, **DELETE** in its entirety and **SUBSTITUTE** with page 8 of this Addendum.

E. PLANS

1. To Drawings numbers 32849-01-D through 32849-94-D, **DELETE** in their entirety and **REPLACE** with pages 9 through 102 of this Addendum.

   NOTE:
   The scope of work **HAS NOT** changed from this drawing substitution, this drawing substitution is to address the formatting only.

James Nagelvoort, Director
Public Works Department

Dated: *November 10, 2014*
San Diego, California

JN/BD/Lad

City of San Diego

CONTRACTOR'S NAME:_____
ADDRESS:_____
TELEPHONE NO.:_____ **FAX NO.:**_____
CITY CONTACT: Damian Singleton - Contract Specialist, Email:DSingleton@sandiego.gov
Phone No. (619) 533-3382, Fax No. (619) 533-3633
JSleiman/ Bdoringo/Lad

CONTRACT DOCUMENTS

FOR

SOUTH MISSION BEACH LIFEGUARD STATION

VOLUME 1 OF 2

BID NO.: K-15-1180-DBB-3
SAP NO. (WBS/IO/CC): S-00791
CLIENT DEPARTMENT: 1912
COUNCIL DISTRICT: 2
PROJECT TYPE: BB

THIS CONTRACT IS SUBJECT TO THE FOLLOWING:

- THE CITY'S SUBCONTRACTING PARTICIPATION REQUIREMENTS FOR SLBE PROGRAM.
- PREVAILING WAGE RATES: STATE ☒ FEDERAL ☐
- APPRENTICESHIP

BID DUE DATE:

2:00 PM
NOVEMBER 20, 2014
CITY OF SAN DIEGO
PUBLIC WORKS CONTRACTS
1010 SECOND AVENUE, 14th FLOOR, MS 614C
SAN DIEGO, CA 92101

CONTRACT FORMS

CONSTRUCTION CONTRACT

This contract is made and entered into between THE CITY OF SAN DIEGO, a municipal corporation, herein called "City", and _____, herein called "Contractor" for construction of **South Mission Beach Lifeguard Station**; Bid No. **K-15-1180-DBB-3**; in the amount of _____ ($ _____), which is comprised of the Base Bid plus/minus Additive/Deductive Alternates _____.

IN CONSIDERATION of the payments to be made hereunder and the mutual undertakings of the parties hereto, City and Contractor agree as follows:

1. The following are incorporated into this contract as though fully set forth herein:

   (a) The attached Faithful Performance and Payment Bonds.

   (b) The attached Proposal included in the Bid documents by the Contractor.

   (c) Reference Standards listed in the Notice Inviting Bids and the Supplementary Special Provisions (SSP).

   (d) That certain documents entitled **South Mission Beach Lifeguard Station**, on file in the office of the Public Works Department as Document No. **S-00791**, as well as all matters referenced therein.

2. The Contractor shall perform and be bound by all the terms and conditions of this contract and in strict conformity therewith shall perform and complete in a good and workmanlike manner **South Mission Beach Lifeguard Station**, Bid Number **K-15-1180-DBB-3,** San Diego, California.

3. For such performances, the City shall pay to Contractor the amounts set forth at the times and in the manner and with such additions or deductions as are provided for in this contract, and the Contractor shall accept such payment in full satisfaction of all claims incident to such performances.

4. No claim or suit whatsoever shall be made or brought by Contractor against any officer, agent, or employee of the City for or on account of anything done or omitted to be done in connection with this contract, nor shall any such officer, agent, or employee be liable hereunder.

5. This contract is effective as of the date that the Mayor or designee signs the agreement.

AFFIDAVIT OF DISPOSAL

WHEREAS, on the _____ DAY OF _____, 2_____ the undersigned entered into and executed a contract with the City of San Diego, a municipal corporation, for:

South Mission Beach Lifeguard Station
(Name of Project)

as particularly described in said contract and identified as Bid No. **K-15-1180-DBB-3**; SAP No. (WBS/IO/CC): **S-00791**; and **WHEREAS**, the specification of said contract requires the Contractor to affirm that "all brush, trash, debris, and surplus materials resulting from this project have been disposed of in a legal manner"; and **WHEREAS**, said contract has been completed and all surplus materials disposed of:

_____

_____

_____

NOW, THEREFORE, in consideration of the final payment by the City of San Diego to said Contractor under the terms of said contract, the undersigned Contractor, does hereby affirm that all surplus materials as described in said contract have been disposed of at the following location(s)

_____

_____

_____

and that they have been disposed of according to all applicable laws and regulations.

Dated this _____ DAY OF _____, _____.

_____ Contractor
by

ATTEST:

State of _____
County of _____

On this_____ DAY OF _____, 2____, before the undersigned, a Notary Public in and for said County and State, duly commissioned and sworn, personally appeared_____ _____ known to me to be the _____ Contractor named in the foregoing Release, and whose name is subscribed thereto, and acknowledged to me that said Contractor executed the said Release.

Notary Public in and for said County and State

City of San Diego

CONTRACTOR'S NAME:_____
ADDRESS:_____
TELEPHONE NO.:_____ **FAX NO.:**_____
CITY CONTACT: Damian Singleton - Contract Specialist, Email: DSingleton@sandiego.gov
Phone No. (619) 533-3482, Fax No. (619) 533-3633
JSleiman/ Bdoringo/Lad

CONTRACT DOCUMENTS

FOR

SOUTH MISSION BEACH LIFEGUARD STATION

VOLUME 2 OF 2

BID NO.: K-14-1180-DBB-3
SAP NO. (WBS/IO/CC): S-00791
CLIENT DEPARTMENT: 1912
COUNCIL DISTRICT: 2
PROJECT TYPE: BB

THIS CONTRACT IS SUBJECT TO THE FOLLOWING:

- THE CITY'S SUBCONTRACTING PARTICIPATION REQUIREMENTS FOR SLBE PROGRAM.
- PREVAILING WAGE RATES: STATE ☒ FEDERAL ☐
- APPRENTICE SHIP

THIS BIDDING DOCUMENT TO BE SUBMITTED IN ITS ENTIRETY
REFER TO VOLUME 1 COVER PAGE FOR TIME, DATE, AND LOCATION

Architectural Engineering & Parks Division, Engineering & Capitol Projects Department

South Mission Beach Lifeguard Station

700 N. Jetty Road - San Diego, California

PTS #323774

South Mission Beach Lifeguard Station
San Diego, California

Architectural Abbreviations

AP	ACCESS PANEL
@	AT
AB	ANCHOR BOLT
ABV	ABOVE
A/C	AIR CONDITIONING
AC	ASPHALT CONCRETE
ACOUS	ACOUSTICAL
ADA	AMERICANS w/ DISABILITIES ACT
ADD	ADDENDUM
ADH	ADHESIVE
ADJ	ADJACENT
ADJT	ADJUSTABLE
A.F.F.	ABOVE FINISH FLOOR
AGG	AGGREGATE
ALT	ALTERNATE
ALUM	ALUMINUM
ANOD	ANODIZED
ARCH	ARCHITECT(URAL)
ASTM	AMERICAN SOCIETY FOR TESTING MATERIALS
AUTO	AUTOMATIC
A/V	AUDIO VISUAL
AWMBS	AIR, WATER, MOISTURE BARRIER SYSTEM
BD	BOARD
BSMT	BASEMENT
BM	BENCHMARK
BTWN	BETWEEN
BIT	BITUMINOUS
BLDG	BUILDING
BLKG	BLOCKING
BTM	BOTTOM
BTU	BRITISH THERMAL UNIT
BUR	BUILT UP ROOF
CAB	CABINET
CBC	CALIFORNIA BUILDING CODE
CFM	CUBIC FOOT OF AIR PER MINUTE
CIPC	CAST-IN-PLACE CONCRETE
CJ	CONSTRUCTION JOINT
CL	CENTER LINE
CLG	CEILING
CLOS	CLOSET
CLR	CLEAR(ANCE)
CMU	CONCRETE MASONRY UNIT
COL	COLUMN
COMB	COMBINATION
CONC	CONCRETE
CONF	CONFERENCE
CONST	CONSTRUCTION
CONT	CONTINUOUS/CONTINUE
CONTR	CONTRACT(OR)
CORR	CORRIDOR
CPT	CARPET(ED)
CT	CERAMIC TILE
CTR	COUNTER
CSI	CONSTRUCTION SPECIFICATIONS INSTITUTE
d (D)	PENNY
DBL	DOUBLE
DEMO	DEMOLISH/DEMOLITION
DTL	DETAIL
D.F.	DRINKING FOUNTAIN
DIAG	DIAGONAL
DIA	DIAMETER
DIM	DIMENSION
DIV	DIVISION
DR	DOOR
DN	DOWN
DS	DOWNSPOUT
DWG	DRAWING
(E)	EXISTING
EA.	EACH
ELEC.	ELECTRIC(AL)
EL / ELEV	ELEVATION
ENC	ENCLOSE (URE)
EQ	EQUAL
EQUIP	EQUIPMENT
EST	ESTIMATE
EXH	EXHAUST
EXIST	EXISTING
EJ	EXPANSION JOINT
EXP	EXPOSED
EXT	EXTERIOR
FAS	FASTEN, FASTENER
FAU	FORCED AIR UNIT
FD	FLOOR DRAIN
FE	FIRE EXTINGUISHER
F.E.C.	FIRE EXTINGUISHER CABINET
F.F.	FINISHED FLOOR
F.F.E.	FINISHED FLOOR ELEVATION
F.G.	FINISH GRADE
F.H.C.	FIRE HOSE CABINET
FIN	FINISH(ED)
FL	FLOW LINE
FLASH	FLASHING
FLEX	FLEXIBLE
FLR	FLOOR(ING)
F.O.C.	FACE OF CONCRETE / CURB
F.O.F	FACE OF FINISH
F.O.M.	FACE OF MASONRY
F.O.S.	FACE OF STUDS
FND	FOUNDATION
FP	FIREPROOF
FR	FIRE RATED
FRP	FIBER REINFORCED PANEL
FT	FOOT
FTG	FOOTING
FURR	FURRED (ING)
FUT	FUTURE
GA	GAGE, GAUGE
GAL	GALLON
GALV	GALVANIZED
GD	GRADE
GL	GLASS, GLAZING
GLU-LAM	GLUED, PRESSURE-LAMINATED BEAM
GYP	GYPSUM
HB	HOSE BIBB
HBD	HARDBOARD
HC	HOLLOW CORE
HDW	HARDWARE
HDR	HEADER
HM	HOLLOW METAL
HOR	HORIZONTAL
HR	HOUR
HT	HEIGHT
HVAC	HEATING/VENTILATING/ AIR CONDITIONING
HWD	HARDWOOD
HWH	HOT WATER HEATER

ID	INSIDE DIAMETER
INCL	INCLUDE(D)
INTEG	INTEGRATED
INSTR	INSTRUCTIONS
INS	INSULATE(D), (ION)
INT	INTERIOR
JAN	JANITOR
JT	JOINT
KIT	KITCHEN
KO	KNOCKOUT
LAM	LAMINATE(D)
LAV	LAVATORY
LOC	LOCATION / LOCATE
LT	LIGHT
LWC	LIGHTWEIGHT CONCRETE
MAX	MAXIMUM
MECH	MECHANIC(AL)
MED	MEDIUM
MFR	MANUFACTURE(R)
MIN	MINIMUM
MISC	MISCELLANEOUS
MH	MANHOLE
MOD	MODIFIED
MTL	METAL
MULL	MULLION
N.I.C.	NOT IN CONTRACT
NOM	NOMINAL
N.T.S.	NOT TO SCALE
o/	OVER
O.C.	ON CENTER
OD	OUTSIDE DIAMETER
OH	OVERHEAD
OPG	OPENING
PA	PLANTER AREA
PAR	PARALLEL
PCC	PRECAST CONCRETE
PERF	PERFORATE(D)
PH	PANIC HARDWARE
PL	PLATE
P.L.	PROPERTY LINE
PLAM	PLASTIC LAMINATE
PLAS	PLASTER
PLY	PLYWOOD
PNL	PANEL
PSF	POUNDS PER SQUARE FOOT
PSI	POUNDS PER SQUARE INCH
PT	POINT / PAINT
P.T.	PRESSURE TREATED
PVC	POLYVINYL CHLORIDE
R	RISER
RA	RETURN AIR
RAD	RADIUS
RD	ROOF DRAIN
REF	REFERENCE
REINF	REINFORCING (ED)
REQD.	REQUIRED
REV	REVISION(S), REVISED
RF	ROOF
RFL	REFLECT (ED) (IVE) (OR)
RM	ROOM
R.O.	ROUGH OPENING
SA	SUPPLY AIR
SAWM	SELF ADHESIVE WATERPROOF MEMBRANE
SC	SOLID CORE
SCH	SCHEDULE
SD	STORM DRAIN
SEC	SECTION
SHT	SHEET
SHTG	SHEATHING
SIM	SIMILAR
SLDG	SLIDING
SPEC	SPECIFICATION(S)
SQ	SQUARE
SS	STAINLESS STEEL
STD	STANDARD
STO/STOR	STORAGE
STL	STEEL
STRUCT	STRUCTURAL
SYM	SYMMETRY (ICAL)
T	TREAD
T&B	TOP & BOTTOM
T&G	TONGUE & GROOVE
TEL	TELEPHONE
THK	THICKNESS)
T.O	TOP OF
T.O.C.	TOP OF CURB
T.O.P.	TOP OF PARAPET
TV	TELEVISION
TYP	TYPICAL
UBC	UNIFORM BUILDING CODE
UNFIN	UNFINISHED
U.O.N./ U.N.O.	UNLESS OTHERWISE NOTED
VB	VAPOR BARRIER/VINYL BASE
VCT	VINYL COMPOSITION TILE
VERT	VERTICAL
V.I.F	VERIFY IN FIELD
VTR	VENT THROUGH ROOF
VTW	VENT THROUGH WALL
W/	WITH
W/O	WITHOUT
WC	WATER CLOSET
WD	WOOD
WH	WALL HUNG
WP	WATERPROOF
WPF	WATERPROOFING
WPM	WATERPROOF MEMBRANE

Deferred Submittal

DEFERRED SUBMITTAL'S SHALL BE PROVIDED FOR THE FOLLOWING BUILDING COMPONENTS/ELEMENTS

A. AUTOMATIC FIRE SPRINKLER SYSTEM
B. FIRE ALARM

1. SUBMITTAL DOCUMENTS FOR DEFERRED SUBMITTAL ITEMS SHALL BE SUBMITTED TO THE BUILDING OFFICIAL FOR REVIEW AND APPROVAL BY CONTRACTOR AND COPIED TO THE ARCHITECT OF RECORD, AND NOT SUBMITTED BY THE INDIVIDUAL SUB-CONTRACTOR.

2. DEFERRED SUBMITTAL DOCUMENTS IN ADDITION TO THE SEAL OF THE RESPONSIBLE ENGINEER SHALL BEAR THE SHOP DRAWING APPROVAL STAMP OF THE ARCHITECT OF RECORD, ENGINEER OF RECORD, AND THE GENERAL CONTRACTOR ON ALL SHEETS OF THE PLANS AND COVER OF THE CALCULATION.

3. SUBMITTAL DOCUMENTS FOR DEFERRED SUBMITTAL ITEMS SHALL BE SUBMITTED IN A TIMELY MANNER THAT ALLOWS A MINIMUM OF THIRTY WORKING DAYS FOR THE INITIAL PLAN REVIEW. ALL COMPONENTS RELATED TO THE DEFERRED SUBMITTAL MUST BE ADDRESSED TO THE SATISFACTION OF THE PLAN CHECK DIVISION PRIOR TO APPROVAL OF THE SUBMITTAL ITEMS.

4. DEFERRED SUBMITTAL ITEMS SHALL NOT BE FABRICATED / INSTALLED UNTIL THEIR DESIGN AND SUBMITTAL DOCUMENTS HAVE BEEN APPROVED BY THE BUILDING OFFICIAL.
5. PROVIDE TWO COPIES OF THE DEFERRED SUBMITTAL DOCUMENTS FOR FINAL APPROVAL.

6. CONTRACTOR IS RESPONSIBLE FOR ALL COST FOR OBTAINING REQUIRED APPROVALS, PERMIT FEES, AND INSPECTION FEES FOR ALL DEFERRED APPROVALS.

Special Inspection & Off-site Fabrication

Special Inspection:

SEE STRUCTURAL DRAWINGS FOR LIST OF "SPECIAL INSPECTION PROGRAM".

Off-site Fabrication:

AN APPLICATION TO PERFORM OFF-SITE FABRICATION MUST BE SUBMITTED TO THE INSPECTION SERVICES DIVISION FOR APPROVAL PRIOR TO FABRICATION.

A CERTIFICATE OF COMPLIANCE FOR OFF-SITE FABRICATION MUST BE COMPLETED AND SUBMITTED TO THE INSPECTION SERVICES DIVISION PRIOR TO ERECTION OF PREFABRICATED COMPONENTS.

Structural Observation

WHERE OCCURS, SEE STRUCTURAL DRAWINGS SHEET S0.1 FOR STRUCTURAL OBSERVATION

General Notes

1. FOR ADDITIONAL NOTES, SEE SHEET T2.0

2. NOTICE TO THE APPLICANT / OWNER / OWNER'S AGENT (ARCHITECT OR ENGINEER OF RECORD): BY USING THIS PERMITTED CONSTRUCTION DRAWINGS FOR CONSTRUCTION/INSTALLATION OF THE WORK SPECIFIED HEREIN, YOU AGREE TO COMPLY WITH THE REQUIREMENTS OF THE CITY OF SAN DIEGO FOR SPECIAL INSPECTIONS, STRUCTURAL OBSERVATIONS, CONSTRUCTION MATERIAL TESTING AND OFF-SITE FABRICATION OF BUILDING COMPONENTS, CONTAINED IN THE STATEMENT OF SPECIAL INSPECTIONS AND, AS REQUIRED BY THE CALIFORNIA CONSTRUCTION CODE.

3. NOTICE TO THE CONTRACTOR / BUILDER / INSTALLER / SUB-CONTRACTOR / OWNER-BUILDER: BY USING THIS PERMITTED CONSTRUCTION DRAWINGS FOR CONSTRUCTION/INSTALLATION OF THE WORK SPECIFIED HEREIN, YOU ACKNOWLEDGE AND ARE AWARE OF, THE REQUIREMENTS CONTAINED IN THE STATEMENT OF SPECIAL INSPECTIONS. YOU AGREE TO COMPLY WITH THE REQUIREMENTS OF THE CITY OF SAN DIEGO FOR SPECIAL INSPECTIONS, STRUCTURAL OBSERVATIONS, CONSTRUCTION MATERIAL TESTING AND OFF-SITE FABRICATION OF BUILDING COMPONENTS, CONTAINED IN THE STATEMENT OF SPECIAL INSPECTIONS AND, AS REQUIRED BY THE CALIFORNIA CONSTRUCTION CODES.

Contractor's Responsibilities

1. PURSUANT TO SECTION 4216 OF THE CALIFORNIA GOVERNMENT CODE, AT LEAST 2 WORKING DAYS PRIOR TO EXCAVATION, YOU MUST CONTACT THE REGIONAL NOTIFICATION CENTER (E.G., UNDERGROUND SERVICE ALERT OF SOUTHERN CALIFORNIA) AND OBTAIN AN INQUIRY INDENTIFICATION NUMBER.

2. NOTIFY SDG&E AT LEAST 10 DAYS PRIOR TO EXCAVATING WITHIN 10' OF SDG&E UNDERGROUND HIGH VOLTAGE TRANSMISSION POWER LINES. (I.E., 60 KV & HIGHER)

Storm Water Protection

1. THIS PROJECT IS SUBJECT TO MUNICIPAL STORM WATER PERMIT ORDER NO. R9-2007-001 AND WPCP.

2. THIS PROJECT WILL FOLLOW PHASED GRADING NOT TO EXCEED FIVE ACRES PER PHASE.

3. THE CONTRACTOR SHALL COMPLY WITH THE REQUIREMENTS NOTED IN THE GREENBOOK 2012 CITY SUPPLEMENT SEC 701 - WATER POLLUTION CONTROL.

Building Data C.B.C. 2010 EDITION (TITLE 24)

Governing Codes: SEE SHEET T2.0 FOR REFERENCES

Type Of Construction: V-B - (NON RATED)

Sprinklered: ■ YES (Garage Only) ☐ NO

Occupancy (2010 CBC): B; S-2 (RESCUE VEHICLE AREA) — OCCUPANCY IS PART OF MIXED-USE, NON-SEPARATED FROM PRIMARY USE)

Number Of Stories: 2 STORIES + MEZZANINE

Actual Height: - @ TOP OF PARAPET (- ALLOWED PER MC XXX.) - @ TYP. ROOF

Allowable Area (Table 5A): BASIC 9,000 SF FOR NON-SEPARATED OCCUPANCIES

Allowable Area (Multi-Story): 9,000 SF X 2 = 18,000 S.F.

Actual Area:

	B OCCUPANCY	S-2 OCCUPANCY	TOTAL
MAIN LEVEL	1,806 SF	1,107 SF	2,913 SF
2ND LEVEL	682 SF	0 SF	682 SF
OBSERVATION LEVEL (MEZZANINE)	214 SF	0 SF	214 SF
TOTAL:	2,702 SF	1,107 SF	3,809 SF

Allowable Stories (Table 5A): BASIC 2 STORIES

Actual Stories (Table 5A): 2 STORIES + MEZZANINE

Exterior Wall Ratings (Table 602): TYPE VB: 1 HOUR LESS THAN 10 FT./NR ELSEWHERE FOR A3, B, E, AND S1 OCC

Vicinity Map

Project Data

Descretionary Approvals: SITE DEVELOPMENT PERMIT # 107071; COASTAL DEVELOPMENT PERMIT # 6-11-044

Project Name: SOUTH MISSION BEACH LIFEGUARD STATION

Project Description: DEMOLITION OF AN EXISTING 897 SQUARE-FOOT, THREE STORY LIFEGUARD TOWER BUILT IN 1974 AND CONSTRUCTION OF A NEW 3,878 SQUARE-FOOT, THREE STORY LIFEGUARD STATION.
WORK ALSO TO INCLUDE:
A. EROSION CONTROL BARRIER.
B. EXTENSION OF 6 FOOT WIDE SIDEWALK.
C. RE-STRIPPING OF ACCESSIBLE PARKING STALLS.
D. LANDSCAPING REPAIR AS INDICATED.

Project Address: 700 N. JETTY RD. SAN DIEGO, CA 92109

Historic: No

Zone: MBPD-R-S

Existing Use: LIFEGUARD STATION

Approvals: SITE DEVELOPMENT PERMIT #107071; COASTAL DEVELOPMENT PERMIT #6-11-044

Legal Description: PUEBLO LOT 1803 OF PUEBLO LANDS OF SAN DIEGO, IN THE CITY OF SAN DIEGO, COUNTY OF SAN DIEGO, STATE OF CALIFORNIA, ACCORDING TO THE MAP THEREOF MADE BY JAMES PASCOE IN 1870, A COPY OF WHICH MAP IS FILED AS MISCELLANEOUS MAP NO. 36 IN THE OFFICE OF THE COUNTY RECORDER OF SAID COUNTY OF SAN DIEGO, BOUNDED ON THE NORTH BY THE WESTERNLY EXTENSION OF THE SOUTH LINE OF BALBOA COURT IN MISSION BEACH, AS SAME IS SHOWN ON MAP THEREOF NO. 1809, FILED IN THE COUNTY RECORDER'S OFFICE; BOUNDED ON ENTRANCE TO MISSION BAY (FALSE BAY); BOUNDED ON THE NORTHEAST AND EAST BY THE SOUTHWESTERLY LINES OF OCEAN FRONT WALK IN MISSION BEACH, THE SOUTHWESTERLY LINE OF MISSION BOULEVARD IN MISSION BEACH, AND THE SOUTHWESTERLY LINE OF THE LAND DESCRIBED IN DEED FROM UNION TRUST COMPANY OF SAN DIEGO, TO CITY OF SAN DIEGO, DATED FEBRUARY 3, 1906 AND RECORDED IN BOOK 700, PAGE 386 OF DEEDS.

A.P.N.: 423-750-01

Site Acreage: 9.79 ACRES (426,452 S.F.)

Lot Coverage: <.6%

Floor Area Ratio (F.A.R.): <7%

Floor Area: 3,809 SF

Parking Existing: STANDARD 272 SPACES; ACCESSIBLE 4 SPACES; TOTAL: 276 SPACES

Parking Proposed: STANDARD 269 SPACES; ACCESSIBLE 5 SPACES (4 Existing & 4 New); TOTAL: 274 SPACES

Bicycle Parking Proposed: (4) BICYCLE SPACES PROVIDED

Coastal Height Limit: 30 FEET FROM EXISTING GRADE

Building Height: 30 FEET FROM 12.02 ELEVATION / EXISTING GRADE. THE HIGHEST POINT OF THE ROOF, EQUIPMENT OR ANY VENT, PIPE, ANENNA OR OTHER PROJECTION SHALL NOT EXCEED 30 FT. ABOVE GRADE. (ORDINACE 11333 NS) - (AS MEASURED IN ACCORDANCE W/ THE UBC 1970 EDITION)

Permits: ANY DEMOLITION SHALL BE UNDER A SEPARATE PERMIT

Sheet Index

94 Sheets Total

Sheets of 94	Discipline Code	Sheet No.	Sheet Name
1	G-1	T1.0	Title Sheet
2	G-2	T2.0	General Notes, Symbols & Abbrevations
3	G-3	T3.0	Existing Topo / Survey
4	G-4	T4.0	Site Development Conditions
5	G-5	T5.0	Coastal Development Conditions
6	G-6	PA0.1	Public Art Wall - 'Beach Castles'
		Civil	
7	C-1	C-1	Title Sheet
8	C-2	C-2	General Notes
9	C-3	C-3	Details
10	C-4	C-4	Details
11	C-5	C-5	Demolition Plan
12	C-6	C-6	Demolition Plan
13	C-7	C-7	Grading and Drainage Plan
14	C-8	C-8	Utility Plan
15	C-9	C-9	Utility Plan
16	C-10	C-10	Erosion Control Notes and Details
17	C-11	C-11	Erosion Control Plan
18	C-12	C-12	Horizontal Control Plan
		Architectural	
19	A-1	A0.1	Site Plan
20	A-2	A0.2	Enlarged Site Plan
21	A-3	A1.0	Construction Staging + Fencing Plan
22	A-4	A1.1	First Floor Plan
23	A-5	A1.2	Second Floor + Roof Plan
24	A-6	A1.3	Observation Floor + Roof Plan
25	A-7	A1.4	First Floor Reflected Ceiling Plan
26	A-8	A1.5	Second + Third Reflected Ceiling Plans
27	A-9	A2.0	Exterior Elevations
28	A-10	A2.1	Cast-In-Place Panel Layout
29	A-11	A3.0	Building Sections
30	A-12	A3.1	Wall Sections
31	A-13	A3.2	Wall Sections
32	A-14	A4.0	Enlarged Plans + Interior Elevations
33	A-15	A4.1	Enlarged Plans + Interior Elevations
34	A-16	A4.2	Stair Plans + Sections
35	A-17	A4.3	Interior Elevations
36	A-18	A5.0	Accessibility Details
37	A-19	A5.01	Accessibility Notes
38	A-20	A5.1	Details
39	A-21	A5.2	Details
40	A-22	A5.3	Details
41	A-23	A5.4	Details
42	A-24	A5.5	Details
43	A-25	A5.6	Details
44	A-26	A5.7	Details
45	A-27	A6.0	Door Schedule + Finish Schedule
46	A-28	A6.1	Window Schedule
47	A-29	A6.2	Wall Assemblies
		Structural	
48	S-1	S1.1	General Notes
49	S-2	S1.2	General Notes
50	S-3	S1.3	Sheet Pile Plan, General Notes & Abbreviations
51	S-4	S1.4	Typical Details
52	S-5	S1.5	Typical Details
53	S-6	S1.6	City Wall Details
54	S-7	S2.1	Mat Foundation Plan
55	S-8	S2.1A	Mat Foundation Additional Reinforcing Plan & Details
56	S-9	S2.2	Second Floor Framing Plan & Second Floor Slab Plan
57	S-10	S2.3	Third Floor Framing Plan & Third Floor Slab Plan
58	S-11	S2.4	Observation Roof Framing Plan & Details
		S3.1	Not Used
59	S-12	S3.2	Third Floor Details
60	S-13	S3.3	Second Floor Details
61	S-14	S3.4	Second Floor Details
62	S-15	S3.5	Second Floor Details
63	S-16	S3.6	Second Floor Details
64	S-17	S3.7	Second Floor Details
65	S-18	S3.8	Details
		Mechanical	
66	M-1	M0.1	Mechanical Legend and General Notes
67	M-2	M0.2	Mechanical Schedules
68	M-3	M0.3	Mechanical Title 24
69	M-4	M0.4	Mechanical Title 24
70	M-5	M0.5	Mechanical Title 24
71	M-6	M1.1	First Floor Mechanical Plan
72	M-7	M1.2	Second Floor and Roof Mechanical Plan
73	M-8	M1.3	Observation Floor Mechanical Plan
74	M-9	M4.1	Mechanical Details
75	M-10	M4.2	Mechanical Details
		Plumbing	
76	P-1	P0.1	Plumbing Legend, Schedules + Notes
77	P-2	P1.0	Underfloor Plumbing Plan
78	P-3	P1.1	First Floor Plumbing Plan
79	P-4	P1.2	Second Floor + Roof Plumbing Plan
80	P-5	P1.3	Observation Floor Plumbing Plan
81	P-6	P3.1	Waste + Vent Diagram + Water Riser
82	P-7	P4.1	Plumbing Details
		Electrical	
83	E-1	E0.1	Symbols List
84	E-2	E0.2	Fixture Schedules, Panel Schedule & Pictures
85	E-3	E0.3	Single Line Diagram
86	E-4	E1.0	Site Plan
87	E-5	E2.0	First Floor Power Plan
88	E-6	E2.1	Second Floor + Observation/Roof Power Plan
89	E-7	E2.2	First Floor Data Plan
90	E-8	E2.3	Second Floor + Observation/Roof Data Plans
91	E-9	E3.0	First Floor Lighting Plan
92	E-10	E3.1	Second Floor + Observation/Roof Lighting Plans
93	E-11	E4.0	Interior Title 24 Calculations
94	E-12	E4.1	Exterior Title 24 Calculations

Project Team

Legal Owner: SOUTH MISION BEACH LIFEGUARD STATION
CITY OF SAN DIEGO
ARCHITECTURAL ENGINEERING + PARKS DIVISION
ENGINEERING + CAPITOL PROJECTS DEPARTMENT
525 B ST., SUITE 750 MS#908A
SAN DIEGO, CA 92101
619.533.3105
619.533.3112 FAX
CONTACT: JIHAD SLEIMAN
email: JSleiman@sandiego.gov

Architect: DOMUSSTUDIO ARCHITECTURE
2150 W. WASHINGTON, SUITE 303
SAN DIEGO, CALIFORNIA 92110
619.692.9393
CONTACT: Wayne Holtan (x15)
email: wayne.holtan@domusstudio.com

Geotech: TERRA COSTA CONSULTING GROUP
445 Murphy Canyon Rd., Suite 100
San Diego, CA 92120-4379
858.573.6900
858.573.8900 FAX
CONTACT: WALT CRAMPTON
email: wcrampton@terracosta.com

Civil: RBF CONSULTING
975 Clairemont Mesa Blvd., Suite 100
San Diego, CA 92124
858.614.5000
858.614.5001 FAX
CONTACT: ROB GERKE
email: rgerke@rbf.com

Structural: MARTIN + LIBBY STRUCTURAL ENGINEERS
4452 Glacier Avenue
San Diego, CA 92120
619.280.9307
619.280.3533 FAX
CONTACT: JEAN LIBBY, P.E.
email: jlibby@libby-lei.com

Mechanical / Plumbing: M-E ENGINEERS, INC
3760 Convoy St., Ste. 340
San Diego, CA 92111
858.565.3900
858.565.3909 FAX
CONTACT: LAWRENCE BROOKS, PE
email: lawrence.brooks@me-engineers.com

Electrical: KRUSE + ASSOCIATES
12245 World Trade Drive, Suite A
San Diego, CA 92128
858.676.9776
858.676.9744 FAX
CONTACT: KEITH KRUSE
email: keith@kruseassoc.net

G-1

PLANS FOR THE CONSTRUCTION OF
South Mission Beach Lifeguard Station

Title Sheet | T1.0

CITY OF SAN DIEGO, CALIFORNIA
ENGINEERING & CAPITAL PROJECTS
ARCHITECTURAL ENGINEERING & CONTRACTS DIVISION
SHEET 01 OF 94 SHEETS

WBS S-00791

APPROVED: [signature] FOR CITY ENGINEER — 10/13/2014 DATE

SUBMITTED BY: JIHAD SLEIMAN, PROJECT MANAGER
YOUSIF BENYAMIN, PROJECT ENGINEER
SEE SHEETS — CCS27 COORDINATES
SEE SHEETS — CCS83 COORDINATES

DESCRIPTION	BY	APPROVED	DATE	FILMED
ORIGINAL	WH/TT			

CONTRACTOR ______ DATE STARTED ______
INSPECTOR ______ DATE COMPLETED ______

32849-01-D

SPEC. NO. 8147

LICENSED ARCHITECT WAYNE HOLTAN No. C12113 REN 9.30.15 STATE OF CALIFORNIA

Domusy Associates Architects @ domusstudio
2150 West Washington, Suite 303
San Diego, California 92110
Tel 619.692.9393
Fax 619.692.9394
domusstudio.com

CITY OF SAN DIEGO
PUBLIC WORKS PROJECT

CONSTRUCTION CHANGE / ADDENDUM

CHANGE	DATE	AFFECTED OR ADDED SHEET NUMBERS

WARNING: 0 — 1. IF THIS BAR DOES NOT MEASURE 1" THEN DRAWING IS NOT TO SCALE

© COPYRIGHT October 13, 2014 at 7:51 AM. Proprietary design. These drawings and design are protected by common law copyright. All patentable material contained herein and engineering with Domusy + Associates Architects @ domusstudio LLP shall be the property of Domusy + Associates Architects @ domusstudio LLP

Proprietary design: These drawings and design are protected by common law copyright. All patentable material contained herein and originating with Dominy + Associates Architects @ domusstudio LLP shall be the property of Dominy + Associates Architects @ domusstudio LLP

Architectural Legend

California Green Building Standards Code

1. BICYCLE PARKING FOR PROJECTS WITH OVER 10 TENANT OCCUPANTS (10 EMPLOYEE OCCUPANTS) SHALL COMPLY WITH CGC SECTION 5.106.4.
2. FUEL-EFFICIENT VEHICLE PARKING WILL BE PROVIDED IN ACCORDANCE WITH CGC SECTION 5.106.5.1. PROVIDE PAINTED LETTERS IN THE PAINT USED FOR STALL STRIPING THAT READ: "CLEAN AIR VEHICLE" SUCH THAT THE LOWER EDGE OF THE LAST WORD ALIGNS WITH THE END OF THE STALL STRIPING AND IS VISIBLE BENEATH A PARKED VEHICLE.
3. EXTERIOR LIGHT POLLUTION MUST COMPLY WITH CGC SECTION 5.106.8.
4. CONTRACTOR SHALL PREPARE AND SUBMIT TO THE REGULATING AGENCY A "WASTE MANAGEMENT PLAN" THAT OUTLINES THE ITEMS LISTED IN CGC SECTION 5.408.2.
5. A MINIMUM OF 50% OF CONSTRUCTION WASTE IS TO BE RECYCLED PER CGC SECTION 5.408.3.
6. 100% OF TREES, STUMPS, ROCKS, VEGETATION AND ASSOCIATED SOILS PRIMARILY FROM THE CONSTRUCTION WILL BE REUSED OR RECYCLED PER CGC SECTION 5.408.4.
7. CONTRACTOR TO PROVIDE A BUILDING "SYSTEMS MANUAL" AS LISTED IN CGC SECTION 5.410.2.5, AND DELIVER TO THE BUILDING OWNER OR REPRESENTATIVE AND THE FACILITES OPERATOR. THE "SYSTEMS MANUAL" SHALL CONTAIN THE REQUIRED FEATURS LISTED IN CGC SECTION 5.410.2.5.1.
8. DURING CONSTRUCTION, THE ENDS OF DUCT OPENINGS ARE TO BE SEALED AND MECHANICAL EQUIPMENT IS TO BE COVERED PER CGC SECTION 5.504.3
9. VOCS MUST COMPLY WITH THE LIMITATIONS LISTED IN CGC SECTION 5.504.4 AND TABLES 4.504.1, 5.504.4.1, 5.504.4.2, 5.504.4.3 AND 5.504.4.5 FOR ADHESIVES, SEALANTS, PAINTS, COATINGS, CARPET AND COMPOSITION WOOD PRODUCTS.
10. THE INSTALLATIONS OF HVAC, REFRIGERATION AND FIRE SUPPRESSION SYSTEMS WILL NOT CONTAIN CFCS OR HALONS, PER CGC SECTION 5.508.1.
11. PRIOR TO THE FINAL APPROVAL OF THE BUILDING, THE LICENSED CONTRACTOR, ARCHITECT OR ENGINEER IN RESPONSIBLE CHARGE FO THE OVERALL CONSTRUCTION MUST COMPLETE AND SIGN THE GREEN BUILDING STANDARDS CERTIFICATION FORM WHICH SHALL BE GIVEN TO THE BUILDING DEPARTMENT OFFICIAL TO BE FILED WITH THE APPROVED PLANS.
12. LANDSCAPE IRRIGATION WATER USE SHALL HAVE WEATHER BASED CONTROLLERS PER CGC SECTION 5.304.3.1

Storm Water Quality Notes / Construction BMP's

1. BICYCLE PARKING FOR PROJECTS WITH OVER 10 TENANT OCCUPANTS (10 EMPLOYEE OCCUPANTS) SHALL COMPLY WITH CGC SECTION 5.106.4.
2. THIS PROJECT SHALL COMPLY WITH ALL REQUIREMENTS OF THE STATE PERMIT; CALIFORNIA REGIONAL WATER QUALITY CONTROL BOARD. NOTES BELOW REPRESENT KEY MINIMUM REQUIREMENTS FOR CONSTRUCTION BMP'S.
3. THE CONTRACTOR SHALL BE RESPONSIBLE FOR CLEANUP OF ALL SILT AND MUD ON ADJACENT STREET(S), DUE TO CONSTRUCTION VEHICLES OR ANY OTHER CONSTRUCTION ACTIVITY, AT THE END OF EACH WORK DAY, OR AFTER A STORM EVENT THAT CAUSES A BREECH IN INSTALLED CONSTRUCTION BMPS WHICH MAY COMPROMISE STORM WATER QUALITY WITHIN ANY STREET(S). A STABILIZED CONSTRUCTION EXIT MAY BE REQUIRED TO PREVENT CONSTRUCTION VEHICLES OR EQUIPMENT FROM TRACKING MUD OR SILT ONTO THE STREET.
4. ALL STOCKPILES OF SOIL AND/OR BUILDING MATERIALS THAT ARE INTENDED TO BE LEFT FOR A PERIOD GREATER THAT SEVEN CALENDAR DAYS ARE TO BE COVERED. ALL REMOVABLE BMP DEVICES SHALL BE IN PLACE AT THE END OF EACH WORKING DAY WHEN FIVE DAY RAIN PROBABILITY FORECAST EXCEEDS 40%.
5. A CONCRETE WASHOUT SHALL BE PROVIDED ON ALL PROJECTS WHICH PROPOSE THE CONSTRUCTION OF ANY CONCRETE IMPROVEMENTS WHICH ARE TO BE POURED IN PLACE ON SITE.
6. THE CONTRACTOR SHALL RESTORE ALL EROSION/SEDIMENT CONTROL DEVICES TO WORKING ORDER AFTER EACH RUN-OFF PRODUCING RAINFALL OR AFTER ANY MATERIAL BREACH IN EFFECTIVENESS.
7. ALL SLOPES THAT ARE CREATED OR DISTURBED BY CONSTRUCTION ACTIVITY MUST BE PROTECTED AGAINST EROSION AND SEDIMENT TRANSPORT AT ALL TIMES.
8. THE STORAGE OF ALL CONSTRUCTION MATERIALS AND EQUIPMENT MUST BE PROTECTED AGAINST ANY POTENTIAL RELEASE OF POLLUTANTS IN THE ENVIRONMENT.
9. THE CONTRACTOR SHALL COMPLY WITH THE REQUIREMENTS NOTED IN THE GREENBOOK 2012 CITY SUPPLEMENT SEC 701 - WATER POLLUTION CONTROL.

© COPYRIGHT October 13, 2014 at 8:20AM

General Notes

1. CONTRACTOR SHALL FIELD VERIFY ALL EXISTING CONDITIONS PRIOR TO BID AND CONSTRUCTION.
2. ALL CONTRACTORS SHALL REPORT ANY CONFLICT / INCONSISTENCIES IMMEDIATELY TO THE RESIDENT ENGINEER AND PRIOR TO PROCEEDING WITH THEIR WORK.
3. TO PROMOTE CLEAR COMMUNICATION IN THE FIELD, ALL QUESTIONS AND CLARIFICATIONS SHALL BE SUBMITTED, IN WRITING, TO THE RESIDENT ENGINEER IN A TIMELY MANNER. OFFICIAL RESOLUTIONS TO THESE ISSUES SHALL BE ISSUED IN WRITING ONLY.
4. LOCATIONS OF UTILITIES AS SHOWN IN DRAWINGS IS BASED UPON INFORMATION INCLUDED IN RECORD DRAWINGS. THE CONTRACTOR SHALL VERIFY THE LOCATION OF ALL UTILITIES. THE ARCHITECTS AND ARCHITECTS CONSULTANTS WILL NOT BE RESPONSIBLE FOR THE RECORD DRAWINGS. WHERE CONFLICTS ARISE BETWEEN ACTUAL LOCATION AND DRAWINGS, THE ARCHITECT SHALL BE NOTIFIED; UNLESS OTHERWISE NOTED, ALL UTILITIES SHALL BE PROVIDED AND INSTALLED UNDERGROUND
5. ANY PERIODIC VISITS TO THE JOB SITE BY THE ARCHITECT ARE FOR THE PURPOSE OF DETERMINING COMPLIANCE WITH THE TECHNICAL PROVISIONS OF THE CONTRACT DOCUMENTS AND ARE IN NO WAY A GUARANTEE OF INSURANCE, NOR ASSUME RESPONSIBILITY FOR METHODS OR APPLIANCES USED BY THE CONTRACTOR, NOR THE SAFETY ON THE JOB IN COMPLIANCE WITH THE LAWS AND REGULATIONS
6. DO NOT SCALE DRAWINGS, DIMENSIONS PREVAIL.
7. WHERE NO DETAILS ARE SHOWN OR NOTED FOR ANY PART OF THE WORK, THE DETAILS SHALL BE THE SAME AS FOR ANY OTHER SIMILAR WORK OR AS DIRECTED BY THE ARCHITECT.
8. ALL CONSTRUCTION MUST MEET OR EXCEED ALL REQUIREMENTS STATED IN SOILS REPORT. COPIES OF SOILS REPORTS ARE AVAILABLE UPON REQUEST.
9. ALL WORK UNDER ALL SECTIONS SHALL BE PERFORMED IN STRICT ACCORDANCE WITH THE HIGHEST STANDARDS OF PRACTICE RELATED TO THE TRADES INVOLVED, AND SHALL BE COMPLETE AND PROPERLY COORDINATED WITH ALL WORK ADJACENT OR RELATED TO IT.
10. FRAMER SHALL LAYOUT ALL STUDS / CEILING JOISTS / RAFTERS TO ACCOMMODATE RECESSED LIGHTS, EXHAUST FANS AND ANY OTHER ELECTRICAL / MECHANICAL FIXTURES.
11. THE CONTRACTOR SHALL PROVIDE AND PAY FOR TEMPORARY TELEPHONE SERVICE FOR THE JOB SITE DURING THE ENTIRE CONSTRUCTION.
12. OWNER SHALL PAY FOR BUILDING AND OTHER PERMITS. CONTRACTOR SHALL OBTAIN BUILDING AND OTHER PERMITS FROM THE CITY OF JURISDICTION.
13. IT IS THE INTENT OF THESE DOCUMENTS THAT THE WORK DESCRIBED HEREIN, WHEN ACCOMPLISHED, SHALL CONSTITUTE A COMPLETE JOB. ALL COORDINATION, FEES, TASKS, LABOR, MATERIALS, TOOLS, CONNECTIONS, EQUIPMENT, CLEANUP (UNLESS OTHERWISE NOTED IN DOCUMENTS) REQUIRED TO FULLY FINISH THE DESCRIBED PROJECT SHALL BE FURNISHED AND PAID FOR BY THE CONTRACTOR WITHIN THE SCOPE OF THE WORK. ANY AND ALL EXCEPTIONS SHALL BE REQUESTED AND AGREED TO IN WRITING AT THE TIME OF THE SIGNING OF THE OWNER/ CONTRACTOR AGREEMENT
14. FINISH GRADE SHALL SLOPE AWAY FROM THE BUILDING A MINIMUM OF 2%.
15. ALL NATURAL GAS APPLIANCES, THAT ARE INSTALLED IN THE BUILDING MUST BE EQUIPPED WITH APPROVED INTERMITTENT IGNITION DEVICES
16. CONTRACTOR SHALL BE RESPONSIBLE TO PROVIDE PVC SLEEVES AND CHASERS BENEATH PAVING TO ALL AREAS INCLUDING RAISED PLANTERS FOR INSTALLATION OF UTILITY LINES.
17. IT IS THE INTENT OF THESE CONTRACT DOCUMENTS THAT THE NEW CONSTRUCTION OF THE PROJECT WHEN COMPLETED SHALL CONFORM TO REGULATIONS AT THE TIME OF PLAN CHECK, OF THE FOLLOWING CODES. GOVERNING CODES; PERFORM ALL WORK IN ACCORDANCE WITH THE LATEST EDITION OF CALIFORNIA ADMINISTRATIVE CODES AND THE FOLLOWING ADOPTED CODES AND REGULATIONS, AND STANDARDS

- CALIFORNIA AND FEDERAL OCCUPATIONAL HEALTH AND SAFETY ACTS
- CALIFORNIA BUILDING STANDARDS CODE 2010 (WHICH ADOPTS THE 2009 IBC)
- CALIFORNIA BUILDING CODE 2010
- CALIFORNIA MECHANICAL CODE 2010 (WHICH ADOPTS THE 2009 UMC)
- CALIFORNIA PLUMBING CODE 2010 (WHICH ADOPTS THE 2009 UPC)
- CALIFORNIA ELECTRICAL CODE 2010 (WHICH ADOPTS THE 2008 NEC)
- CALIFORNIA TITLE 24 2010
- CALIFORNIA FIRE CODE 2010
- NATIONAL FIRE PROTECTION ASSOC.
- AMERICAN CONCRETE CODE
- AMERICAN DISABILITY ACT
- TCA CERAMIC TILE INSTALLATION 2011
- MASONRY ASSOCIATION
- CALIFORNIA ENERGY EFFICIENCY STANDARDS - 2008
- 2012 GREENBOOK AND WHITEBOOK WITH STANDARD DRAWINGS

18. WORK IN FURRED AREAS SHALL NOT BE CONCEALED UNTIL SUCH WORK HAS BEEN INSPECTED AND APPROVED BY THE INSPECTING AUTHORITIES. IF SUCH WORK IS CONCEALED WITHOUT INSPECTION AND APPROVAL, THE CONTRACTOR SHALL BE FINANCIALLY RESPONSIBLE FOR ALL WORK REQUIRED TO OPEN AND RESTORE THE CONCEALED AREAS IN ADDITION TO ANY REQUIRED MODIFICATION TO THE SYSTEM AS WELL AS TO OTHER SYSTEMS.
19. CONTRACTOR TO PROVIDE ALL BACKING PLATES AND SUPPORTS FOR ITEMS SUCH AS, BUT NOT LIMITED TO, TOILET ACCESSORIES, TOILET PARTITIONS, MIRRORS, CASEWORK, HANDRAILS, ETC.
20. CONTRACTOR TO PROVIDE SEPARATION OR BARRIER BETWEEN ALL DISSIMILAR METALS.
21. ELEVATORS, ESCALATORS AND LIFTS SHALL COMPLY WITH CBC CHAPTER 30 ALL BUILDINGS AND STRUCTURES WITH ONE OR MORE SHALL BE PROVIDED WITH NOT LESS THAN ONE MEDICAL EMERGENCY SERVICE TO ALL LANDINGS MEETING THE PROVISIONS OF SECTION 3003.5.
22. VACUUM BREAKERS SHALL BE INSTALLED AT ALL HOSE BIBS.
23. ANY EXISTING STRUCTURE OR MATERIAL TO REMAIN THAT IS DISTURBED OR DAMAGED DURING CONSTRUCTION SHALL BE PATCHED TO MATCH EXISTING CONDITIONS.
24. WHERE WALLS AND CEILINGS ARE REQUIRED TO BE OF FIRE RESISTIVE OR NON-COMBUSTIBLE CONSTRUCTION AND WALLS ARE SET OUT OR CEILINGS ARE DROPPED. THE HANGERS AND ASSEMBLY MEMBERS OF SUCH DROPPED CEILINGS THAT ARE BELOW THE MAIN CEILING LINE SHALL BE OF NON COMBUSTIBLE MATERIALS EXCEPT THAT IN TYPE III AND TYPE V CONSTRUCTION, FIRE RETARDANT TREATED WOOD MAY BE USED.
25. CONTRACTOR SHALL UTILIZE WINDOW/ PRODUCTS WITH FULL U-VALUE LABELING BY THE WINDOW MANUFACTURERS CHOICE OF DEFAULT OR NFRC-U METHOD. ALL EXTERIOR WINDOWS AND DOORS SHALL BE SET IN SEALANT, WEATHERSTRIPPED AND LABELED AS COMPLYING WITH ANSI STANDARD.
26. NO PERSON SHALL PERFORM ANY WORK ON ANY BUILDING OR STRUCTURE ADJACENT TO A PUBLIC WAY IN GENERAL USE BY THE PUBLIC FOR PEDESTRIAN TRAVEL, UNLESS THE PEDESTRIANS SHALL BE PROTECTED BY FENCES, CANOPIES, OR OTHER DEVICES. UBC 3303
27. SUPPLY AND INSTALL GALVANIZED SHEET METAL ROOF JACKS FOR VENTING. VENTS SHALL BE GANGED TOGETHER AND ROUTED TO BACKSIDE OF ROOF TO PENETRATE ROOF AS DIRECTED BY ARCHITECT, MIN 15" FROM FASCIA & 18" MIN FROM RIDGES.
28. EXPOSED HOT WATER AND DRAIN PIPES UNDER LAVATORY TO BE INSULATED OR COVERED AND BE FREE OF SHARP OR ABRASIVE SURFACES.
29. ALL EXISTING TO REMAIN MECHANICAL, ELECTRICAL, PLUMBING, AND EQUIPMENT, (DUCTS, WIRING, ETC) DISTURBED BY NEW CONSTRUCTION SHALL BE REROUTED OR MODIFIED AS REQUIRED TO PROVIDE A COMPLETE OPERATING SYSTEM

Security Notes

1. CONTRACTOR SHALL FIELD VERIFY ALL EXISTING CONDITIONS PRIOR TO BID AND CONSTRUCTION.
2. SLIDING GLASS DOORS AND WINDOWS LOCATED LESS THAN 16 FEET ABOVE ANY SURFACE AVAILABLE FOR USE BY THE PUBLIC SHALL BE CAPABLE OF BEING LOCKED SECURELY. MOVEABLE PANELS SHALL NOT BE EASILY REMOVED FROM THE FRAME.
3. EXTERIOR WOODEN DOORS SHALL BE OF SOLID CORE CONSTRUCTION OR SHALL BE COVERED ON THE INSIDE FACE WITH 16-GAGE SHEER METAL ATTACHED WITH SCREWS AT 6 INCH ON CENTERS AROUND THE PERIMETER.
4. ALL SWINGING DOORS SHALL BE EQUIPPED WITH A DEAD BOLT WITH A MINIMUM THROW OF 1 INCH AND AN EMBEDMENT OF NOT LESS THAN 5/8 INCH.
5. UNFRAMED GLASS DOORS SHALL BE OF FULLY TEMPERED GLASS NOT LESS THAN 1/2 INCH THICK.
6. NARROW-FRAMED GLASS DOORS SHALL BE OF FULLY TEMPERED GLASS NOT LESS THAN 1/4 INCH THICK.
7. ANY GLASS THAT IS LOCATED WITHIN 40 INCHES OF THE LOCKING DEVICE ON A DOOR SHALL BE FULLY TEMPERED, OR HAVE APPROVED METAL BARS.
8. ALL NEW SECURITY GRILLS, DOORS AND WINDOWS MUST COMPLY WITH BUILDING SECURITY STANDARD, ORDINANCE #7-79

Miscellaneous Notes

1. CONTRACTOR SHALL FIELD VERIFY ALL EXISTING CONDITIONS PRIOR TO BID AND CONSTRUCTION.
2. THE FINAL COMPACTION REPORT AND SOIL ENGINEER EXCAVATION INSPECTION REPORT MUST BE SUBMITTED TO THE BUILDING INSPECTOR PRIOR TO FOUNDATION INSPECTION AND THAT CITY INSPECTOR MUST INSPECT EXCAVATIONS BEFORE POURING ANY CONCRETE.
3. FIRE DAMPER ASSEMBLIES, INCLUDING SLEEVES, AND INSTALLATION PROCEDURES MUST BE AT THE SITE FOR THE BUILDING INSPECTORS USE

Commercial Fire Notes

1. PLANS FOR ALL FIRE ALARM AND SPRINKLER SYSTEMS SHALL BE INCLUDED IN CONTRACT AND BE SUBMITTED TO THE LOCAL FIRE PROTECTION AUTHORITY AND FIRE MARSHAL FOR APPROVAL PRIOR TO INSTALLATION. PLANS FOR ALL FIXED FIRE PROTECTION EQUIPMENT (INCLUDING COMPLETE PLANS AND SPECIFICATIONS FOR FIRE ALARM SYSTEMS; FIRE-EXTINGUISHING SYSTEMS, INCLUDING AUTOMATIC SPRINKLERS AND WET & DRY STANDPIPES; HALON SYSTEMS AND OTHER SPECIAL TYPES OF AUTOMATIC FIRE -EXTINGUISHING SYSTEMS; BASEMENT PIPE INLETS; AND OTHER FIRE-PROTECTION SYSTEMS AND APPURTENANCES THERETO) SHALL BE PREPARED AND SUBMITTED BY INSTALLING CONTRACTOR TO THE FIRE PROTECTION BUREAU, FIRE MARSHAL AND ARCHITECT FOR APPROVAL PRIOR TO INSTALLATION. PLANS FOR STANDPIPES, SPRINKLER SYSTEMS OR FIRE ALARM SYSTEMS MUST BE SUBMITTED TO THE ARCHITECT FOR REVIEW AND ACCEPTANCE OF EXPOSED EQUIPMENT AND LOCATIONS, PRIOR TO REVIEW AND APPROVAL OF THE PLANS BY THE FIRE PREVENTION BUREAU. ALL EXPOSED HEADS SHALL BE STRATEGICALLY LOCATED IN THE CENTER OF THE CEILING TILES UNLESS OTHERWISE NOTED.
2. BUILDING CONTRACTOR SHALL SECURE PERMITS REQUIRED BY THE LOCAL FIRE PROTECTION AUTHORITY PRIOR TO OCCUPYING THIS BUILDING(S).
3. BUILDINGS UNDER CONSTRUCTION; ALTERATION OR DEMOLITION SHALL CONFORM TO CFC CHAPTER 14. FIRE DAMPER ASSEMBLIES, INCLUDING SLEEVES, ACCESS, AND INSTALLATION PROCEDURES; AND FIRE SPRINKLER PLANS AND FIRE/LIFE-SAFETY PLANS SHALL BE SUBMITTED FOR REVIEW, APPROVAL AND PERMIT ISSUANCE.
4. NO SMOKING OR COOKING IS ALLOWED IN STRUCTURES WHERE COMBUSTIBLE MATERIALS ARE EXPOSED OR WITHIN 25' OF COMBUSTIBLE MATERIALS STORAGE AREAS.
5. CUTTING, WELDING, OR OTHER HOT WORK SHALL BE IN CONFORMANCE WITH CFC CHAPTER 26.
6. APPROVAL OF THESE PLANS SHALL NOT PERMIT THE VIOLATION OF ANY CODE OR LAW. REQUIREMENTS OR FEATURES NOT IDENTIFIED ON THE PLAN MAY APPLY AND INSPECTORS MAY REQUIRE ADDITIONAL INFORMATION OR ITEMS FROM THOSE SHOWN ON THE PLAN DEPENDING ON ACTUAL OR ANTICIPATED FIELD CONDITIONS. SUCH CHANGES MAY NECESSITATE SUBMITTAL OF REVISED OR AS-BUILT PLANS TO THE FIRE DEPARTMENT AND THE CITY/COUNTY WHERE THE PROJECT IS LOCATED.
7. WHEN REQUIRED, EMERGENCY PLANS SHALL BE SUBMITTED TO FIRE OFFICIAL FOR REVIEW AND APPROVAL PRIOR TO OCCUPANCY. CFC 404.2

GENERAL REQUIREMENTS

8. ADDRESS NUMBERS SHALL BE PROVIDED FOR ALL NEW AND EXISTING BUILDINGS, BE A MINIMUM 4 INCHES HIGH (VERIFY WITH LOCAL FIRE AUTHORITY), CONTRAST WITH THEIR BACKGROUND, AND BE PLAINLY LEGIBLE AND VISIBLE FROM THE STREET OR ROAD FRONTING THE PROPERTY. TEMPORARY ADDRESS NUMBERS SHALL BE PROVIDED ON CONSTRUCTION FENCING OR THE BUILDING UNTIL PERMANENT NUMBERS CAN BE PROVIDED. CBC 501.2, CFC 505
9. PROVIDE AN APPROVED KNOX BOXES / KEY CABINETS IN AN APPROVED LOCATION. SEE PROPOSED LOCATION(S) ON SITE PLAN. COORDINATE FINAL LOCATION WITH FIRE OFFICIAL (506.1).
10. KNOX BOXES/KEY CABINETS SHALL BE PROVIDED FOR ALL HIGH-RISE BUILDINGS, POOL ENCLOSURES, GATES IN THE PATH OF FIREFIGHTER TRAVEL TO STRUCTURES, SECURED PARKING LEVELS, DOORS GIVING ACCESS TO ALARM PANELS AND/OR ANNUNCIATORS, AND ANY OTHER STRUCTURES OR AREAS WHERE IMMEDIATE ACCESS IS REQUIRED OR IS UNDULY DIFFICULT. CONTACT YOUR LOCAL FIRE STATION TO ARRANGE AN APPOINTMENT TO SECURE MASTER BUILDING KEYS IN THE KNOX BOX.
11. DUMPSTERS AND TRASH CONTAINERS EXCEEDING 1.5 CUBIC YARDS SHALL NOT BE STORED IN BUILDINGS OR PLACED WITHIN 5 FEET OF COMBUSTIBLE WALLS, OPENINGS OR COMBUSTIBLE ROOF EAVE LINES UNLESS PROTECTED BY AN APPROVED SPRINKLER SYSTEM OR LOCATED IN A TYPE I OR IIA STRUCTURE SEPARATED BY 10 FEET FROM OTHER STRUCTURES. CONTAINERS LARGER THAN 1 CUBIC YARD SHALL BE OF NON- OR LIMITED-COMBUSTIBLE MATERIALS OR SIMILARLY PROTECTED OR SEPARATED. CFC 304.3
12. EXITS, EXIT SIGNS, FIRE ALARM PANELS, HOSE CABINETS, FIRE EXTINGUISHER LOCATIONS, AND STANDPIPE CONNECTIONS SHALL NOT BE CONCEALED BY CURTAINS, MIRRORS, OR OTHER DECORATIVE MATERIAL.
13. THE EGRESS PATH SHALL REMAIN FREE AND CLEAR OF ALL OBSTRUCTIONS AT ALL TIMES. NO STORAGE IS PERMITTED IN AISLES.
14. EXIT DOORS SHALL BE OPENABLE FROM THE INSIDE WITHOUT THE USE OF A KEY OR ANY SPECIAL KNOWLEDGE OR EFFORT. DOORS SHALL NOT BE PROVIDED WITH THUMB-TURN LOCKS OR DEADBOLTS THAT DO NOT UNLATCH IN TANDEM WITH THE NORMAL OPERATING LEVER. THE OPENING FORCE FOR INTERIOR DOORS WITHOUT CLOSERS SHALL NOT EXCEED 5 POUNDS. THE UNLATCHING AND OPENING FORCE FOR OTHER DOORS, INCLUDING FIRE DOORS, SHALL NOT EXCEED 15 POUNDS. CBC 1008
15. RATED DOORS SHALL BE SELF-CLOSING AND LATCHING. SUCH DOORS SHALL NOT BE EQUIPPED WITH DOOR STOPS OR OTHERWISE PROPPED OPEN. RATED DOORS SHALL BE EQUIPPED WITH RATED HARDWARE. CFC 703
16. THE EXIT PATH SHALL BE CLEARLY IDENTIFIED WITH EXIT SIGNS CONFORMING TO CBC 1011. STAIRS SERVING 4+ STORIES SHALL HAVE STAIRWELL SIGNS CONFORMING TO CBC 1022.8. ILLUMINATED EXIT SIGNS MUST HAVE 90-MINUTE EMERGENCY POWER BACK-UP. TACTILE SIGNS SHALL BE PROVIDED IN COMMERCIAL BUILDINGS, PUBLIC BUILDINGS AND ACCOMMODATIONS, AND PUBLICLY FUNDED HOUSING SUBJECT TO CBC CHAPTER 11D AND SHALL CONFORM TO 1117B.5.1, BE LOCATED FIVE FEET ABOVE FINISH FLOOR LEVEL AND, WHENEVER POSSIBLE, ON THE STRIKE SIDE OF THE DOOR. LETTERING SHALL BE BETWEEN 5/8" AND 2" HIGH. CBC 1011.3
17. THE EXIT PATH SHALL BE ILLUMINATED AT ALL TIMES IN ACCORDANCE WITH CBC 1006. EMERGENCY LIGHTING SHALL BE PROVIDED WITH 90-MINUTE BACK-UP.
18. RATED ASSEMBLIES SHALL CONFORM TO APPROVED METHODS AND MATERIALS OF CONSTRUCTION. PENETRATIONS THROUGH RATED WALLS, CEILINGS, OR FLOORS SHALL BE PROTECTED IN AN APPROVED MANNER COMPLYING WITH CBC/CFC CHAPTER 7.
19. THE REQUIRED FIRE-RESISTANCE RATING OF FIRE-RESISTANCE RATED CONSTRUCTION (INCLUDING WALLS, FIRESTOPS, SHAFT ENCLOSURES, PARTITIONS, SMOKE BARRIERS, FLOORS, FIRE RESISTIVE
20. COATINGS AND SPRAYED FIRE-RESISTANT MATERIALS APPLIED TO STRUCTURAL MEMBERS AND FIR-RESITANT JOINT SYSTEMS) SHALL BE MAINTAINED. (CFC 703.1)
21. IN AREAS WHERE RECESSED FIXTURES VIOLATE THE INTEGRITY OF A FIRE RATED ASSEMBLY, PROTECTION SHALL BE CONTINUOUS AROUND RECESSED FIXTURE TO MAINTAIN CONTINUITY OF THE FIRE RATED ASSEMBLY.
22. IN FIRE RESISTIVE CONSTRUCTION, THE FIRE RESISTIVE CONSTRUCTION SHALL BE MAINTAINED PASSING THROUGH ATTIC AND OTHER SIMILAR AREAS.
23. WALL, FLOOR AND CEILING FINISHES AND MATERIALS SHALL NOT EXCEED THE FLAME SPREAD CLASSIFICATIONS IN CFC TABLE 803.3. DECORATIVE MATERIALS SHALL BE PROPERLY TREATED BY A PRODUCT OR PROCESS APPROVED BY THE STATE FIRE MARSHAL WITH APPROPRIATE DOCUMENTATION PROVIDED TO THE BUILDING OFFICIAL.
14. ALL DECORATIVE MATERIALS SHALL BE MAINTAINED IN A FLAME RETARDANT CONDITION.
15. FIRE PROTECTION; INCLUDING FIRE APPARATUS ACCESS ROADS AND WATER SUPPLIES FOR FIRE PROTECTION, SHALL BE INSTALLED AND MADE SERVICEABLE PRIOR TO AND DURING TIME OF CONSTRUCTION. (CFC SEC. 501.4)
16. DEAD END ACCESS ROADWAYS IN EXCESS OF 150 FEET LONG SHALL BE PROVIDED WITH APPROVED PROVISIONS FOR THE TURNING AROUND OF FIRE DEPARTMENT APPARATUS. THE ACCESS ROADWAY SHALL BE EXTENDED TO WITHIN 150 FEET OF ALL PORTIONS OF THE EXTERIOR WALLS OF THE FIRST STORY OF ANY BUILDING. WHERE THE ACCESS ROADWAY CANNOT BE PROVIDED, APPROVED FIRE PROTECTION SYSTEM(S) SHALL BE PROVIDED AS REQUIRED AND APPROVED BY THE FIRE MARSHAL.

FIRE EXTINGUISHERS

17. LOCATIONS AND CLASSIFICATIONS OF EXTINGUISHERS SHALL BE IN ACCORDANCE WITH CFC 906 AND CCR TITLE 19. AT LEAST ONE EXTINGUISHER SHALL BE PROVIDED DURING CONSTRUCTION ON EACH FLOOR AT EACH STAIRWAY, IN EACH STORAGE AND CONSTRUCTION SHED, IN LOCATIONS WHERE FLAMMABLE OR COMBUSTIBLE LIQUIDS ARE STORED OR USED, OR WHERE SIMILAR HAZARDS ARE PRESENT PER CFC 1415.1. BEFORE FINAL OCCUPANCY, AT LEAST ONE 2A:10B:C EXTINGUISHER SHALL BE PROVIDED SO THAT NO POINT IS MORE THAN 75' TRAVEL DISTANCE FROM THE EXTINGUISHER. EXTINGUISHERS SHALL BE LOCATED ALONG THE PATH OF EGRESS TRAVEL AND IN A READILY VISIBLE AND ACCESSIBLE LOCATION, WITH THE BOTTOM OF THE EXTINGUISHER AT LEAST 4" ABOVE THE FLOOR. ADDITIONAL EXTINGUISHERS MAY BE REQUIRED BY INSPECTORS DEPENDING ON PROJECT OR SITE CONDITIONS AND FINAL PLACEMENT IS SUBJECT TO THEIR APPROVAL.
18. AT LEAST ONE FIRE EXTINGUISHER WITH A MINIMUM RATING OF 4-A-20BC (VERIFY RATING AND SIZE WITH INSPECTOR) SHALL BE PROVIDED OUTSIDE EACH MECHANICAL, ELECTRICAL, OR BOILER ROOM.

SPECIFIC REQUIREMENTS FOR ASSEMBLY OCCUPANCIES

19. OCCUPANT LOAD SIGN, WITH MINIMUM ONE-INCH LETTERS AND NUMBERS CONTRASTING WITH THEIR BACKGROUND, SHALL BE POSTED IN A CONSPICUOUS LOCATION NEAR THE MAIN EXIT PER CBC 1004.3 AND TITLE 19 3.30. WHERE MULTIPLE SEATING CONFIGURATIONS OR USES ARE ANTICIPATED, SEATING DIAGRAMS AND THEIR RESPECTIVE OCCUPANT LOADS MAY ALSO BE REQUIRED TO BE POSTED.
20. PANIC HARDWARE SHALL BE PROVIDED FOR ALL EXIT AND EXIT ACCESS DOORS IN ASSEMBLY OCCUPANCIES. SUCH DOORS SHALL SWING IN THE DIRECTION OF EXIT TRAVEL. DOORS EQUIPPED WITH PANIC HARDWARE SHALL HAVE NO OTHER LOCK OR LATCH UNLESS IT RELEASES AUTOMATICALLY UPON ACTIVATION OF THE PANIC HARDWARE. IF PANIC HARDWARE IS OMITTED ON THE MAIN DOOR WHEN PERMITTED BY CBC 1008.1.9.3, A SIGN STATING "THIS DOOR TO REMAIN UNLOCKED WHEN BUILDING IS OCCUPIED" IN MINIMUM 1-INCH LETTERS CONTRASTING WITH THEIR BACKGROUND SHALL BE POSTED IN A CONSPICUOUS LOCATION ON OR ADJACENT TO THE DOOR.
21. TABLES SHALL BE SPACED AT LEAST 50 INCHES APART WHERE SEATING IS BACK TO BACK AND AISLE ACCESSWAYS SERVE MORE THAN 4 OCCUPANTS OR ARE LONGER THAN SIX FEET. AISLE WIDTHS SHALL BE A MINIMUM OF 30 INCHES WHERE SEATING IS ONLY ON ONE SIDE OF THE AISLE OR 42 INCHES FOR SEATING ON BOTH SIDES. WHERE SEATS BACK UP INTO AISLES, SEAT BACKS SHALL BE LOCATED AT 19 INCHES FROM THE TABLE EDGE AND THE CLEAR AISLE WIDTH SHALL BE MEASURED FROM THE BACK OF THE SEAT. CBC 1025.9, 1017.4
22. OPEN FLAME IN ASSEMBLY AREAS IS PROHIBITED EXCEPT AS SPECIFICALLY PERMITTED BY THE FIRE DEPARTMENT IN COMPLIANCE WITH 2010 CFC 308

EXTINGUISHING SYSTEMS

23. WHEN REQUIRED, AN AUTOMATIC FIRE SPRINKLER SYSTEM SHALL BE PROVIDED THROUGHOUT THE BUILDING IN COMPLIANCE WITH 2010 NFPA 13 (13-R) AND CFC 903. REVIEW AND APPROVAL OF A SPRINKLER PLAN IS REQUIRED PRIOR TO INSTALLATION OR MODIFICATION.
24. ALL VALVES CONTROLLING THE WATER SUPPLY FOR AUTOMATIC SPRINKLER SYSTEMS, PUMPS, TANKS, WATER LEVELS AND TEMPERATURES, CRITICAL AIR PRESSURES AND WATER-FLOW SWITCHES ON ALL SPRINKLER SYSTEMS SHALL BE ELECTRONICALLY SUPERVISED BY A LISTED FIRE ALARM CONTROL UNIT. (UFC 903.4)
25. AN AUTOMATIC EXTINGUISHING SYSTEM SHALL BE PROVIDED TO PROTECT COMMERCIAL-TYPE FOOD HEATING EQUIPMENT THAT PRODUCES GREASE-LADEN VAPORS AND SHALL COMPLY WITH 2010 CFC AND CMC AND 2002 NFPA 17A. REVIEW AND APPROVAL OF A HOOD AND DUCT EXTINGUISHING SYSTEM PLAN IS REQUIRED PRIOR TO INSTALLATION OR USE OF COOKING EQUIPMENT.
26. ONE EXTERIOR APPROVED AUDIBLE DEVICE SHALL BE CONNECTED TO EVERY AUTOMATIC SPRINKLER SYSTEM IN AN APPROVED LOCATION. WHERE A BUILDING FIRE ALARM IS INSTALLED, ACTUATION OF THE AUTOMATIC SPRINKLER SYSTEM SHALL ACTUATE THE BUILDING FIRE ALARM SYSTEM. (CFC 903.4.2)

FIRE HYDRANTS AND STANDPIPES

27. FIRE HYDRANTS SHALL COMPLY WITH FIRE DEPARTMENT REQUIREMENTS FOR ON SITE FIRE HYDRANTS. (CFC 507.5)
28. IN BUILDINGS FOUR OR MORE STORIES IN HEIGHT, STANDPIPES SHALL BE PROVIDED DURING CONSTRUCTION WHEN THE HEIGHT REACHES 40 FEET ABOVE THE LOWEST POINT OF FIRE DEPARTMENT ACCESS. A FIRE DEPARTMENT CONNECTION SHALL BE NO MORE THAN 100 FEET FROM AVAILABLE FIRE DEPARTMENT VEHICLE ACCESS ROADWAYS. A HYDRANT SHALL BE LOCATED ALONG THE ACCESS ROADWAY WITHIN 150 FEET OF THE LOCATION(S) THAT THE FDC CAN BE ACCESSED FROM. CFC 1413
29. FIRE HYDRANT LOCATIONS SHALL BE IDENTIFIED BY THE INSTALLATION OF FIRE DEPARTMENT APPROVED REFLECTIVE MARKERS.

ALARM AND MONITORING SYSTEMS

30. A FIRE ALARM SYSTEM (INCLUDING AUDIBLE AND VISUAL ALARMS) SHALL BE PROVIDED IN COMPLIANCE WITH CBC/CFC 907 AND 2010 NFPA 72. A SEPARATE PLAN SUBMITTAL IS REQUIRED FOR APPROVAL PRIOR TO INSTALLATION OR MODIFICATION.
31. AUTOMATIC FIRE SPRINKLER SYSTEM(S) AND ALL CONTROL VALVES, WITH THE EXCEPTION OF THOSE LISTED IN CFC 903.4, SHALL BE MONITORED BY A UL LISTED CENTRAL ALARM STATION.
32. WHEN SPRINKLER OR FIRE ALARMS ARE PROVIDED, APPROVED NOTIFICATION APPLIANCES FOR THE HEARING IMPAIRED SHALL BE INSTALLED IN ACCORDANCE WITH NATIONAL STANDARDS IN THE FOLLOWING AREAS:
 a. RESTROOMS, CORRIDORS, MULTIPURPOSE ROOMS
 b. OCCUPIED ROOMS WHERE AMBIENT NOISE IMPAIRS HEARING OF THE FIRE ALARM.
 c. LOBBIES; MEETING ROOMS; ANY OTHER AREA FOR COMMON USE. SECTION 4-5.5 (CBC 1114B.1.1)

32.

OTHER REQUIREMENTS

33. STORAGE, DISPENSING, OR USE OF ANY HAZARDOUS MATERIALS SHALL COMPLY WITH CBC 414 AND CFC REGULATIONS. THE STORAGE AND USE OF HAZARDOUS MATERIALS SHALL BE REVIEWED AND APPROVED BY THE FIRE DEPARTMENT PRIOR TO SUCH MATERIALS BEING BROUGHT ON SITE. APPROPRIATE HAZARDOUS MATERIALS WARNING SIGNS SHALL BE PROMINENTLY PLACED IN THE VICINITY/ENTRANCES TO AREAS WHERE HAZARDOUS MATERIALS ARE STORED IN QUANTITIES SUFFICIENT TO REQUIRE A CFC PERMIT.

Landscape Notes / General

1. PER CALIFORNIA COASTAL COMMISSION CONDITIONS OF APPROVAL, NO NEW SITE LANDSCAPE IS TO BE ADDED.

1A. SEE 1 GALLON PLANTS AT FLOW THROUGH STORM WATER PLANTERS PER KEYNOTE 65 ON SHEET A1.1

2. CONTRACTOR IS RESPONSIBLE TO PATCH AND REPAIR ALL IMPACTS TO PLANTING AREAS DUE TO INSTALLATION OR DEMOLITION OF WORK AS DEPICTED ON THESE DRAWINGS TO INCLUDE REPAIR AND REPLACE IRRIGATION HEADS AND LATERALS AND TO REPLACE EXISTING PLANTING WITH LIKE SIZE AND KIND, TURF, AND SHRUBS.

CONSTRUCTION NOTES:

1. UNLESS SPECIFIED OTHERWISE CONSTRUCTION AND LAYOUT WORK INCLUDES, BUT IS NOT LIMITED TO THE LOCATION, PLACEMENT AND DETAILING OF ALL PAVING.
2. DIMENSIONS INDICATED ON PLANS SHALL PREVAIL OVER PLAN SCALE. DIMENSIONS ARE TO FACES OF, AND PERPENDICULAR FACE OF BUILDING WALLS UNLESS SHOWN OTHERWISE. ALL ANGLES AND CONNECTIONS ARE (90) DEGREES UNLESS NOTED OTHERWISE. WALKS CONNECTING DOORS ARE TO BE ALIGNED WITH FACE OF BUILDING UNLESS NOTED OTHERWISE.
3. ALL COORDINATE POINTS AND DIMENSIONS ARE TAKEN FROM THE BACK OF CURB UNLESS NOTED OTHERWISE.
4. LAYOUT POINTS OF ALL RADIUS SHALL BE CONNECTED BY SMOOTH EVEN LINES TO CREATE THE CURVED CONFIGURATION AS SHOWN ON THE PLANS.
5. NO DEVIATIONS FROM PLANS SHALL OCCUR WITHOUT APPROVAL OF THE ARCHITECT.
6. ANY PROPOSED WORK THAT IS INCONSISTENT WITH COMMON, SAFE CONSTRUCTION PRACTICES SHALL BE BROUGHT TO THE ATTENTION OF THE OWNERS REPRESENTATIVE PRIOR TO COMMENCING WITH CONSTRUCTION
7. CONTRACTOR SHALL VISIT SITE AND VERIFY ALL FIELD CONDITIONS PRIOR TO BEGINNING CONSTRUCTION.
8. CONTRACTOR SHALL REVIEW PLANS AND DETAILS TO ASCERTAIN LOCATIONS NECESSARY TO PROVIDE ELECTRICAL CONNECTIONS TO POWER IRRIGATION, LIGHTING, ETC.
9. CONTRACTOR SHALL DETERMINE THE LOCATION OF DEPTH OF ALL SITE UTILITIES PRIOR TO CONSTRUCTION. NOTIFY OWNERS REPRESENTATIVE OF ANY DISCREPANCIES IMMEDIATELY.
10. CONTRACTOR SHALL SECURE ALL PERMITS AND PAY ALL APPLICABLE FEES TO CONSTRUCT THE PLANS HEREIN.
11. THE CONTRACTOR SHALL HAVE CITY INSPECTOR OR ARCHITECT VERIFY ALL CONSTRUCTION STAKING LOCATIONS PRIOR TO INSTALLATION OF PAVING.
12. THE CONTRACTOR SHALL PROVIDE ALL CONSTRUCTION STAKING AND RE-STAKING REQUIRED TO COMPLETE THE PROJECT.
13. ALL HARDWARE SUCH AS NAILS, BOLTS, FASTENERS ETC., SHALL BE HOT DIPPED GALVANIZED UNLESS NOTED OTHERWISE.
14. CONTRACTOR SHALL COORDINATE ALL WORK WITH OTHER TRADES AS NECESSARY.
15. CONTRACTOR SHALL BE RESPONSIBLE FOR DAILY CLEANUP OF THE SITE AND PROVIDING ADEQUATE SAFETY MEASURES DURING CONSTRUCTION ON A 24 HOUR BASIS
16. ANY CREDITS AND/OR DEBITS SHALL BE REPORTED TO OWNER AT TIME OF OCCURRENCE FOR PROPER VERIFICATION AND/OR APPROVAL PRIOR TO COMMENCEMENT OF RESULTING ACTION.
17. CONTRACTOR SHALL PROVIDE A 24 HOUR PHONE NUMBER AVAILABLE IN CASE OF EMERGENCY.

PLANTING NOTES:

1. CONTRACTOR SHALL NOTIFY OWNER'S REPRESENTATIVE OF ANY DISCREPANCIES IN THE EXISTING CONDITIONS OR WITHIN THE PLANS PRIOR TO BEGINNING WORK.
2. FINISHED GRADES SHALL BE SMOOTHED TO ELIMINATE PUDDLING OR STANDING WATER. CONTRACTOR SHALL MAINTAIN A MINIMUM 2% DRAINAGE AWAY FROM BUILDINGS AND PAVING INTO DRAINAGE STRUCTURES OR TO STREET. CONTRACTOR SHALL NOTIFY OWNERS'S REPRESENTATIVE IMMEDIATELY OF ANY CONFLICTS IN MAINTAINING DRAINAGE.
3. OWNER'S REPRESENTATIVE SHALL APPROVE ALL FINISH GRADING PRIOR TO PLACEMENT OF ANY PLANT MATERIAL.
4. CONTRACTOR SHALL NOTIFY OWNER'S REPRESENTATIVE FOR REPAIR OBSERVATION AT THE FOLLOWING TIMES:
 - MAINLINE: PRIOR TO BACKFILL AND PRESSURE TEST
 - LATERAL LINES: PRIOR TO BACKFILL
 - CONTROL WIRES: PRIOR TO BACKFILL
 - TREE LOCATIONS: PRIOR TO PLANTING
 - IRRIGATION COVERAGE: PRIOR TO PLANT PLACEMENT
 - PLANT APPROVAL AND SPOTTING PRIOR TO PLANTING
 - PRE-MAINTENANCE APPROVAL
 - POST-MAINTENACNE/FINAL APPROVAL
5. SOIL AMENDMENTS PER INDUSTRY STANDARDS AND EXISTING SOIL CONDITIONS ARE PROVIDED FOR BIDDING.
6. PRIOR TO BEGINNING THE PLANTING OPERATION, IRRIGATE ALL PLANTING AREAS NORMALLY FOR TWO WEEKS TO GERMINATE WEEDS. APPLY CONTACT HERBICIDE TO WEEDS ONLY PER MANUFACTURER, MONSANTO "ROUND-UP" OR EQUAL. REPEAT PROCESS IF WEEDS PERSIST.
7. PRIOR TO PLANTING REPAIR, IRRIGATION SYSTEM SHALL BE FULLY OPERATIONAL AND ALL PLANTING AREAS SHALL BE THOROUGHLY WATERED.
8. PLANT MATERIAL MAY BE REJECTED AT ANY TIME BY OWNER'S REPRESENTATIVE DUE TO CONDITION, FORM OR DAMAGE BEFORE OR AFTER PLANTING
9. PLANTING TABLETS SHALL BE GRO-POWER PLANTING TABLETS 12-8-8 (12 MONTH SLOW RELEASE FORMULATION).
10. ALL PLANTING BEDS SHALL HAVE 2" (TWO INCH) THICK MULCH LAYER, "MULCH" SHALL BE BARK MULCH FROM ONE OF THE FOLLOWING SOURCES; SHREDDED FIR OR SHREDDED CEDAR. MULCH SHOULD BE FREE OF STICKS, STONES, CLAY OR OTHER FOREIGN MATERIAL / OR "EARTHWISE-ECO MULCH" EXISTING MULCH ON SITE MAY BE MIXED WITH NEW MULCH. CONTRACTOR SHALL SUBMIT SAMPLE TO OWNERS REPRESENTATIVE FOR APPROVAL PRIOR TO INSTALLATION.
11. ALL PLANTING SHALL BE GUARANTEED THROUGH THE ESTABLISHMENT PERIOD (SEE PLANTING SPECIFICATIONS). ESTABLISHMENT PERIOD SHALL BE 90 DAYS. TREES AND SHRUBS SHALL BE GUARANTEED FOR A PERIOD OF ONE YEAR, BEGINNING FROM THE DATE OF THE FINAL ACCEPTANCE OF THE ESTABLISHMENT PERIOD.
12. AT COMPLETION OF THE ESTABLISHMENT PERIOD, APPLY COMMERCIAL FERTILIZER (15-15-15) AT 2 LBS/1000 SF. TO TURF AREAS ONLY AND WATER IMMEDIATELY WITH A THOROUGH IRRIGATION CYCLE
13. CONTRACTOR IS RESPONSIBLE FOR MAINTAINING ALL REPAIR AREAS IN A WEED AND DEBRIS-FREE CONDITION THROUGHOUT THE ESTABLISHMENT PERIOD.
14. PROVIDE 90 DAY MAINTENANCE OF ENTIRE REPAIR AREA INDICATED BY THE LIMIT OF WORK LINE. FIRE EXTINGUISHERS
15. CONTRACTOR SHALL COORDINATE WITH THE OWNER REPRESENTATIVE PRUNED BY THE CONTRACTOR PRIOR TO COMMENCING WITH TRENCHING OPERATIONS WHERE REQUIRED.
16. CONTRACTOR WILL PROVIDE BUTLERS MILL SPORTS FIELD MIX GRASS SEED AND BUTLERS MILL GROMEX SEED TOPDRESS FOR ALL EXISTING TURF AREAS DAMAGED FROM TRENCHING OPERATIONS.

IRRIGATION NOTES:

1. THE IRRIGATION SYSTEM IS EXISTING OPERATIONAL AND SHALL BE REPAIRED TO THE SAME OPERATIONAL STANDARDS.
2. THE IRRIGATION SYSTEM IS EXISTING. LOCATE ALL PIPING, VALVES, BACKFLOW PREVENTERS, AND OTHER IRRIGATION EQUIPMENT WITHIN PLANTING AREAS UNLESS NOTED OR DIRECTED OTHERWISE. LOCATE ALL VALVES AND VALVE BOX SIX INCHES FROM EDGE OF PAVING OR CURB.
3. EXISTING UTILITIES AND FIELD CONDITIONS: PRIOR TO EXCAVATION, LOCATE ALL CABLES, CONDUITES, AND UNDERGROUND UTILITIES. CONTRACTOR SHALL BE RESPONSIBLE FO AN UNDERGROUND UTILITY SERVICE TO LOCATE AND MARK UTILITIES. CONTRACTOR WILL TAKE PROPER PRECAUTIONS NOT TO DAMAGE OR DISTRUBB SUCH UNDERGROUND IMPROVEMENTS. NOTIFY THE OWNERS REPRESENTATIVE IMMEDIATELY IF A CONFLICT EXISTS BETWEEN SUCH OBSTACLES AND THE PROPOSED WORK. PROCEED IN SAME MANNER IF ROCK LAYERS OR ANY OTHER CONDITIONS ENCOUNTERED UNDERGROUND MAKE CHANGES ADVISABLE.
4. ALL PIPING AND WIRING UNDER ROADWAYS AND PAVING AND THROUGH WALLS SHALL BE SLEEVED.
5. USE TWO WRAPS OF THREE-QUARTER INCH (3/4") TEFLON TAPE FOR ALL THREADED VALVE CONNECTIONS.
6. PROVIDE PULL BOXES FOR CONTROL WIRING LOCATED UNDER PAVING ALL CHANGES IN DIRECTION GREATER THAN FORTY-FIVE (45) DEGREES AND WHERE WIRE RUNS EXCEED TWO HUNDRED FEET (200') IN LENGTH. WIRE SPLICES SHALL BE MADE IN PULL BOXES OR CONTROL VALVE BOXES ONLY.
7. THE CONTRACTOR SHALL BE RESPONSIBLE FOR CONNECTION OF FIELD WIRES TO APPROPRIATE TERMINAL STRIPS. (DO NOT CONNECT FLOW SENSORS AND MASTER VALVE WIRES TO CONTROLLER)
8. ADJUST ALL REPLACED SPRINKLERS TO AVOID OVER SPRAY ONTO WALLS, WALKS, STREETS, UTILITY BOXES, BUILDINGS AND OTHER IMPROVEMENTS.
9. WHERE TRENCHING NEAR TREE ROOTS, TAKE EXTREME CAUTION, NOTIFY INSPECTOR WHEN TRENCHING OPERATIONS HAVE SEVERED TREE ROOTS GREATER THAN THREE INCHES IN DIAMETER.
10. ALL SPRINKLER HEADS SHALL BE SET PERPENDICULAR TO THE FINISH GRADE OF THE AREA TO BE IRRIGATED UNLESS NOTED OTHERWISE ON THE PLANS.
11. CONTRACTOR SHALL INSTALL IN-LINE ANTI-DRAIN VALVES AS WARRANTED BY THE SITE CONDITIONS TO ALLEVIATE LOW HEAD DRAINAGE.
12. THE CONTRACTOR SHALL NOT WILLFULLY INSTALL THE SPRINKLER SYSTEM AS SHOWN ON THE DRAWINGS WHEN IT IS OBVIOUS IN THE FIELD THAT OBSTRUCTIONS, GRADE DIFFERENCES OR DIFFERENCES IN AREA DIMENSIONS ARE FOUND. SUCH OBSTRUCTIONS OR DIFFERENCES SHALL BE BROUGHT TO THE ATTENTION OF THE REPRESENTATIVE. IN THE EVENT THIS NOTIFICATION IS NOT PERFORMED, THE CONTRACTOR SHALL BE RESPONSIBLE FOR ANY REVISIONS NECESSARY.
13. THE CONTRACTOR SHALL KEEP AN UP-TO-DATE COMPLETE "AS-BUILT" RECORD SET OF PRINTS WHICH SHALL BE UPDATED DAILY AND SHOW EVERY CHANGE FROM THE ORIGINAL DESIGN. ALL WORK SHALL BE NEAT AND LEGIBLE.
14. INSTALL IRRIGATION HEADS IN TURF AREAS 1" FROM WALKS AND HARDSCAPE AREAS
15. LATERAL LINE END RUNS SHALL BE 3/4" UNLESS NOTED OTHERWISE.
16. ALL CONTROL VALVES SHALL BE MANIFOLD AND GROUPED IN GENERAL AREAS SHOWN ON PLAN. VALVES SHALL BE LOCATED IN PLANTING AREAS AND IMMEDIATELY ADJACENT TO WALKS, CURBS, OR PAVING AREAS AND SET AT RIGHT ANGLES TO EDGES. INSTALL VALVE BOXES 6" FROM EDGES OF HARDSCAPE AREAS.
17. IRRIGATION LINES SHALL BE INSTALLED IN PLNTING AREAS WHERE EVER FEASBILE AND WITHIN 12" OF PLANTING AREA EDGES UNLESS SHOWN OTHERWISE.
18. CONTRACTOR SHALL REMOVE AND DISCARD DAILY, ALL PIPING DISTURBED DURING TRENCHING OPERATION.
19. PROVIDE PULL BOXES FOR FLOW SENSING AND MASTER VALVE CABLE AT ALL CHANGES GREATER THAN FORY-FIVE (45) DEGREES AND WHERE CABLE RUNS EXCEED TWO HUNDRED FEET (200') IN LENGTH. INSTALL SSPARATE FLOW SENSING CABLE AND MASTER VALVE CABLE IN THE SAME ONE AND A QUARTER INCH (1-1/4") CONDUIT. NO SPLICES WILL BE ALLOWED IN FLOW SENSOR AND MASTER VALVE CABLE.
20. ALL BOLTS FOR LOCKING VALVE BOX LIDS SHALL BE STAINLESS STEEL.
21. CONTRACTOR WILL BE RESPONSIBLE FOR ANY CITY BUILDING PERMITS OR ENCROACHMENT EASEMENT PERMITS NECESSARY FOR WORK.
22. CONTRACTOR SHALL REMOVE ALL EXISTING IRRIGATION HEADS AND AUTOMATIC OR MANUAL VALVES PRIOR TO, DURING, OR AFTER INSTALLATION OF NEW WORK SHOWN ON THESE PLANS.
23. CONTRACTOR SHALL CONTACT INSPECTOR PRIOR TO ANY TRENCHING OPERATIONS. INSPECTOR AND CONTRACTOR TO DISCUSS TRENCHING OPERATIONS AROUND TREES AND PLANT MATERIAL TRIMMING REQUIREMENTS.
24. CONTRACTOR WILL PROVIDE TEMPORARY IRRIGATION SYSTEM, OR HAND-WATER EXISTING LANDSCAPE AREAS DURING CONSTRUCTION PERIOD. WATERING SHALL BE PERFORMED AT A TIME AS TO NOT INTERFERE WITH NORMAL ACTIVITIES. OWNER'S REPRESENTATIVE SHALL BE RESPONSIBLE FOR DTERMINING IRRIGATION NEEDS AND SCHDULING.
25. CONTRACTOR SHALL BACKFILL AND COMPACT TRENCHES. TOP 4" OF TRENCH BACKFILL IN EXISTING TURF AREAS SHALL BE AMENDED WITH TOPSOIL. GRADE TRENCH LINES TO MATCH GRADE WITH SURROUNDING PLANTING AREAS. CONTRACTOR SHALL HAVE TRENCH LINES GRADED IN A CONDITION READY FOR SEEDING OR SODDING.

South Mission Beach Lifeguard Station
700 N. Jetty Road

G-2

Dominy + Associates Architects @ domusstudio
2150 West Washington, Suite 303
San Diego, California 92110
Tel 619.692.9393
Fax 619.692.9394
domusstudio.com

SPEC. NO. 8147

LICENSED ARCHITECT WAYNE HOLTAN No. C-2113 REN. 9.30.15 STATE OF CALIFORNIA

PLANS FOR THE CONSTRUCTION OF
South Mission Beach Lifeguard Station

General Notes — T2.0

CITY OF SAN DIEGO, CALIFORNIA
ENGINEERING & CAPITAL PROJECTS
ARCHITECTURAL ENGINEERING & CONTRACTS DIVISION
SHEET 02 OF 94 SHEETS
WBS S-00791

APPROVED: FOR CITY ENGINEER — DATE 10/13/2014
SUBMITTED BY: JIHAD SLEIMAN, PROJECT MANAGER

DESCRIPTION	BY	APPROVED	DATE	FILMED
ORIGINAL	WH/TT			

YOUSIF BENYAMIN — PROJECT ENGINEER
218-1693 — CCS27 COORDINATES
1858-6253 — CCS83 COORDINATES

CONTRACTOR ______ DATE STARTED ______
INSPECTOR ______ DATE COMPLETED ______

32849-02-D

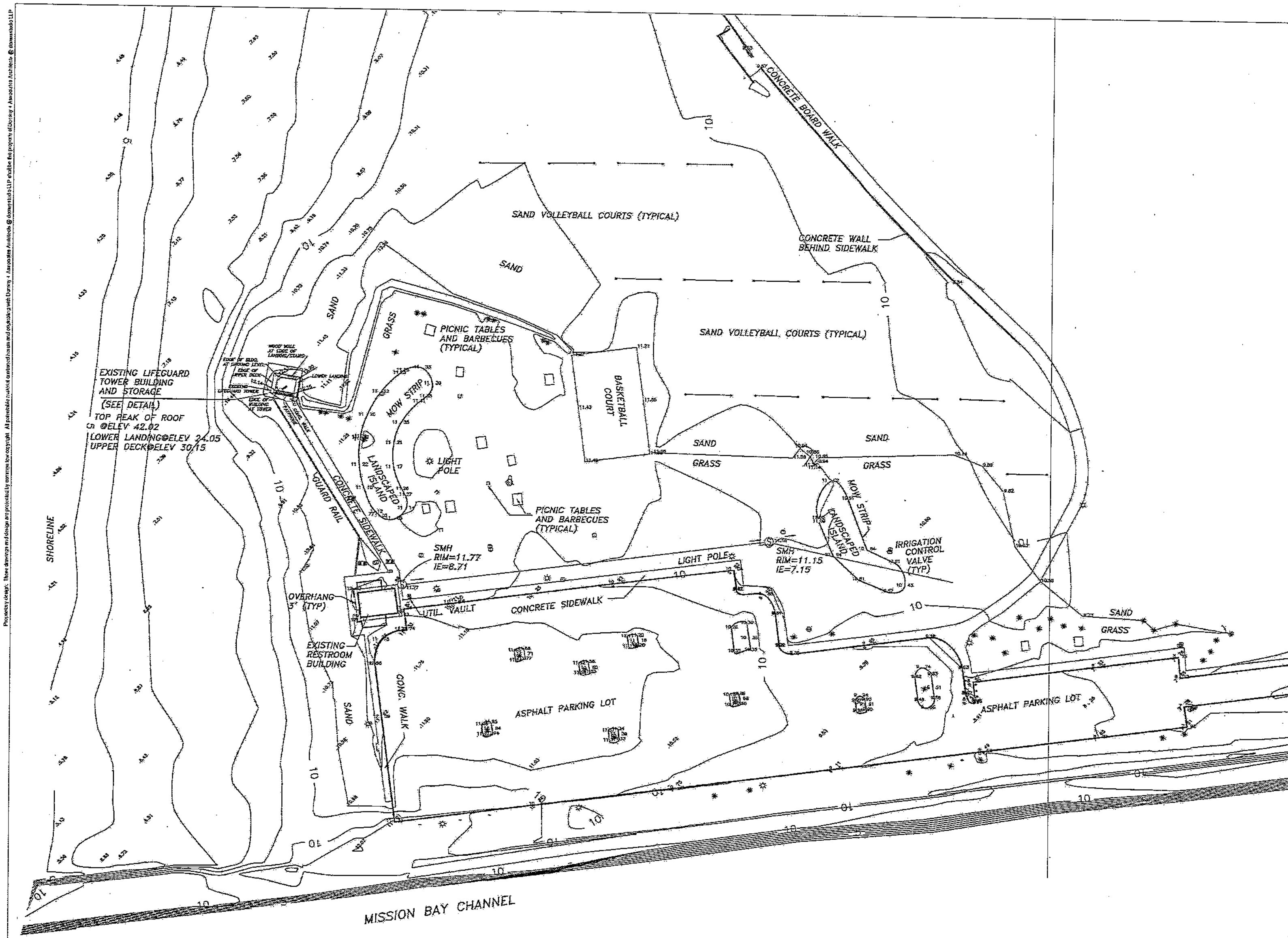

EXISTING TOPOGRAPHY / SURVEY

1" = 40'

NOTE: THE EXISTING PARKING LOT INCLUDES (270) STANDARD SPACES AND (4) ACCESSIBLE SPACES. TOTAL EXISTING PARKING IS (274).

G-3

Domusstudio
2150 West Washington, Suite 303
San Diego, California 92110
Tel 619.692.9393
Fax 619.692.9394
domusstudio.com

SPEC. NO. 8147

LICENSED ARCHITECT
WAYNE HOLTAN
No. C12113
REN 9.30.15
STATE OF CALIFORNIA

PLANS FOR THE CONSTRUCTION OF
South Mission Beach Lifeguard Station

Existing Topo and Survey | T3.0

CITY OF SAN DIEGO, CALIFORNIA
ENGINEERING & CAPITAL PROJECTS
ARCHITECTURAL ENGINEERING & CONTRACTS DIVISION
SHEET 03 OF 94 SHEETS

WBS S-00791

APPROVED: FOR CITY ENGINEER — DATE 10/13/2014

SUBMITTED BY: JIHAD SLEIMAN, PROJECT MANAGER
YOUSIF BENYAMIN, PROJECT ENGINEER

DESCRIPTION	BY	APPROVED	DATE	FILMED
ORIGINAL	WH/TT			

218-1693
CCS27 COORDINATES
1856-6253
CCS83 COORDINATES

CONTRACTOR ______ DATE STARTED ______
INSPECTOR ______ DATE COMPLETED ______

32849-03-D

© COPYRIGHT October 13, 2014

RECORDING REQUESTED BY
CITY OF SAN DIEGO
DEVELOPMENT SERVICES
1222 First Ave., Mail Station 501

WHEN RECORDED MAIL TO
PERMIT INTAKE
MAIL STATION 501

DOCUMENT TITLE: SITE DEVELOPMENT PERMIT NO. 167971
SOUTH MISSION BEACH LIFEGUARD STATION
Council of Governance or DSD APPROVED RESOLUTION
Date of Approval: September 27, 2006

SPACE ABOVE THIS LINE FOR RECORDER'S USE

JOB ORDER NUMBER: 339040

Site Development Permit No. 167971
South Mission Beach Lifeguard Station
Hearing Officer

The Site Development Permit No. 167971 is granted by the Hearing Officer of the City of San Diego to the Engineering and Capital Projects Department, of the City of San Diego Owner/Permittee, pursuant to San Diego Municipal Code (SDMC) section 126.0301 (b). The 0.75-acre site is located at the south end of South Mission Point and just north of the North Jetty in the Mission Beach Precise Planning Area and Coastal Overlay Zone. The project site is legally described as Block No. 6381, Mission Beach, Map No. 1806.

Subject to the terms and conditions set forth in this permit, permission is granted to Owner/Permittee to demolish the existing South Mission Beach Lifeguard Station and construct a replacement 11,125 square foot lifeguard station with adjacent observation tower, flagpole, concession area, general deck and raised portable footings for safety vehicles and equipment, and restrooms as described and identified by size, dimension, quantity, type, and location on the approved exhibits, dated September 27, 2006, on file in the Development Services Department.

The project or facility shall include:

a. Demolition of an existing South Mission Beach Lifeguard Station, consisting of a replacement 2,725 square foot lifeguard station with flood-resistant observation tower, 516 sf tower observation area, ground level enclosed parking storage for safety vehicles and equipment, and restrooms;

b. Landscaping (planting, irrigation and hardscape) related improvements;

c. Accessory improvements determined by the City Manager to be consistent with the land use and development intensity established by the adopted community plan, California Environmental Quality Act final environmental document and applicable improvement

requirements of the City Engineer, the building regulations, conditions of this Permit, and any other applicable regulations of the SDMC, in effect for this site.

STANDARD REQUIREMENTS:

1. Construction, grading or demolition must commence and be pursued in a diligent manner within thirty days after the effective date of final approval by the City, following all appeals. Failure to utilize the permit within thirty-six (36) months will automatically void the permit unless an Extension of Time has been granted. Any such Extension of Time must meet all the SDMC requirements and applicable guidelines in effect at the time the extension is considered by the appropriate decision maker.

2. No permit for the construction, occupancy or operation of any facility or improvement described herein shall be granted, nor shall any activity authorized by this Permit be conducted on the premises until:

a. The Permittee signs and returns the Permit to the Development Services Department; and

b. The Permit is recorded in the Office of the San Diego County Recorder.

3. Unless this Permit has been revoked by the City of San Diego the property included by reference within this Permit shall be used only for the purposes and under the terms and conditions set forth in this Permit unless otherwise authorized by the City Manager.

4. This Permit is a covenant running with the subject property and shall be binding upon the Permittee and any successor or successors, and the interests of any successor shall be subject to each and every condition set out in the Permit and all referenced documents.

5. The utilization or continued use of this Permit shall be subject to the regulations of this and any other applicable governmental agency.

6. Issuance of this Permit by the City of San Diego does not authorize the Permittee for this permit to violate any Federal, State or City laws, ordinances, regulations or policies including, but not limited to, the Endangered Species Act of 1973 (ESA) and any amendment thereto (16 U.S.C. § 1531 et seq.).

7. The Owner/Permittee shall secure all necessary building permits. The applicant is informed that to secure these permits, substantial modifications to the building and site improvements to comply with applicable building, fire, mechanical and plumbing codes and State law regarding access for disabled people may be required.

8. Before issuance of any building or grading permits, complete grading and building design shall be submitted to the City Manager for approval. Plans shall be in accordance with conformity to Exhibit "A," on file in the Development Services Department. No changes,

modifications or alterations shall be made unless appropriate applications or amendment(s) to this Permit have been granted.

9. All of the conditions contained in this Permit have been considered and have been found to be necessary in order to make the findings required for this Permit. It is the intent of the City that the holder of this Permit be required to comply with each and every condition in order to be afforded the special rights which the holder of the Permit is entitled as a result of obtaining this Permit.

10. In the event that any condition of this Permit, on a legal challenge by the Owner/Permittee of this Permit, is found or held by a court of competent jurisdiction to be invalid, unenforceable, or uncommutable, this Permit shall be void. However, in such an event, the Owner/Permittee shall have the right, by paying applicable processing fees, to bring a request for a new permit without the invalid condition(s) back to the discretionary body which approved the Permit for a determination by that body as to whether all of the findings necessary for the issuance of the proposed permit can still be made in the absence of the "invalid" condition(s). Such hearing shall be a hearing de novo and the discretionary body shall have the absolute right to approve, disapprove, or modify the proposed permit and the condition(s) contained therein.

LANDSCAPE REQUIREMENTS:

11. In the event that the Landscape Plan and this Site Plan conflict, the Site Plan shall have final to be resolved with the Landscape Plan such that landscaped areas are consistent with the Exhibit "A," Landscape Development Plan.

12. No change, modification, or alteration shall be made to the project unless appropriate application or amendment of this Permit shall have been granted by the City.

13. Prior to issuance of any construction permits for structures (including shells), complete landscape and irrigation construction documents consistent with the Landscape Standards (including planting and irrigation plans, details and specifications) shall be submitted to the City Manager for approval. The construction documents shall be in substantial conformance with Exhibit "A," Landscape Development Plan, on file in the Office of Development Services.

14. Prior to final inspection, it shall be the responsibility of the Permittee or subsequent Owner to install all required landscape and obtain all required landscape inspections. The permittee or subsequent Owner will maintain all required landscape improvements on a permanent basis, in accordance with the Land Development Code and Landscape Standards.

15. All required landscape shall be maintained in a healthy, weed- and litter-free condition at all times. Severe pruning or "topping" of trees is not permitted. The trees shall be maintained into safe mature size to allow each tree to grow to its mature, healthy and natural

16. Each occupant landscape (including existing or new plantings, hardscape, landscape features) shall be maintained in a neat and orderly appearance at all times

per the approved documents to the satisfaction of the City Manager within 30 days of damage or Certificate of Occupancy.

17. Irrigation overflow or run-off onto adjacent property, streets, water courses, canyons, and other public lands within the City limits of San Diego, including planting areas that will eventually and progress by drainage, watering, or similar means is subject to Section 53.0 of the Landscape Standards.

PLANNING/DESIGN REQUIREMENTS:

18. There shall be compliance with the regulations of the underlying zone(s) unless a deviation or variance to a specific regulation is approved or granted as a condition of approval of this Permit. Where there is a conflict between a condition (including exhibits) of this Permit and a regulation of the underlying zone, the regulation shall prevail unless the condition provides for a deviation or variance from the regulations. Where a condition (including exhibits) of this Permit establishes a provision which is more restrictive than the corresponding regulation of the underlying zone, then the condition shall prevail.

19. The height of the building (or structure) shall not exceed those heights set forth in the conditions and exhibits (including, but not limited to, elevations and cross sections) or the maximum permissible building height of the underlying zone, whichever is lower, unless a deviation or variance to that height limit has been granted as a specific condition of this Permit.

20. A topographical survey conforming to the provisions of the SDMC may be required if it is determined, during construction, that there may be a conflict between the building(s) under construction and the conditions of this Permit or regulations of the underlying zone. The cost of any such survey shall be borne by the Permittee.

21. Any future requests for additional encroachment on this Permit shall be reviewed for compliance with the regulations of the underlying zone(s) which are in effect on the date of the submittal of the required encroachment.

22. All private outdoor lighting shall be shielded and adjusted to fall on the same premises where such lights are located and in accordance with the applicable regulations in the SDMC.

23. The use of electrical or mechanical parking stall meter applicable City standards at a location, color and thickness within.

24. The subject property and associated common areas on site shall be maintained in a neat and orderly fashion at all times.

WATER REQUIREMENTS:

25. Prior to the issuance of any building permits, the Owner/Permittee shall apply for a plumbing permit for the installation of appropriate private back flow prevention device(s) on each water service (domestic, fire, and irrigation) in a manner satisfactory to the Water

Department Director, the City Engineer, and the Cross Connection Supervisor in the Customer Support Division of the Water Department.

26. Prior to the issuance of any certificates of occupancy, public water facilities necessary to serve the development, including fire hydrants, shall be complete and operational in a manner satisfactory to the Water Department Director and the City Engineer.

27. The Owner/Permittee agrees to design and construct all proposed public water facilities in accordance with established criteria in the most current edition of the City of San Diego Water Facility Design Guidelines and City regulations, standards and maxims pertaining thereto. Public water facilities shall be installed in dedicated streets or easements.

WASTEWATER REQUIREMENTS:

28. All proposed sewer facilities will be privately maintained by the Park and Recreation Department.

29. No structures or landscaping that would inhibit access shall be located over any existing public sewer main or its easement.

30. No trees or shrubs exceeding four feet in height at maturity shall be located within ten feet of any public sewer facilities.

31. The developer shall design and construct any proposed public sewer facilities to the most current edition of the City of San Diego's Sewer Design Guide.

32. Proposed private underground sewer facilities shall be designed to meet the requirements of the California Uniform Plumbing Code and shall be reviewed as part of the building permit plan check.

INFORMATION ONLY:

Any party, or subsequent party, to whom the Permittee transfers this Permit shall comply with the provisions of this Permit. Before any transfer of this Permit, the Permittee shall provide the prospective transferee with a copy of this Permit. Both the Permittee and the prospective transferee shall sign an Assignment and Assumption Agreement supplied by the City Manager and submit the signed Assignment and Assumption Agreement to the City Manager for approval. The prospective transferee shall pay the appropriate fee for the Assignment and Assumption Agreement before the City Manager approves the transfer. The Permittee is responsible for the performance of all conditions of this Permit until the Assignment and Assumption Agreement is signed by the prospective transferee and approved by the City Manager.

Any party, or subsequent party, to whom the Permittee transfers this Permit shall comply with the provisions of this Permit. Before any transfer of this Permit, the Permittee shall provide the prospective transferee with a copy of this Permit. Both the Permittee and the prospective transferee shall sign an Assignment and Assumption Agreement supplied by the City Manager and submit the signed Assignment and Assumption Agreement to the City Manager for approval. The prospective transferee shall pay the appropriate fee for the Assignment and Assumption Agreement before the City Manager approves the transfer. The Permittee is responsible for the performance of all conditions of this Permit until the Assignment and Assumption Agreement is signed by the prospective transferee and approved by the City Manager.

Permit Type/PTS Approval No.: Site Development Permit No. 167971
Date of Approval: September 27, 2006

AUTHENTICATED BY THE CITY OF SAN DIEGO DEVELOPMENT SERVICES DEPARTMENT

Patricia Gribble
Development Project Manager

NOTE: Notary acknowledgment must be attached per Civil Code section 1189 et seq.

The undersigned Owner/Permittee, by accepting hereof, agrees to each and every condition of this Permit and promises to perform each and every obligation of Owner/Permittee hereunder.

Engineering and Capital Projects Department
Owner/Permittee

By [redacted]
Brad Sherman
Project Manager

NOTE: Notary acknowledgments must be attached per Civil Code section 1189 et seq.

CALIFORNIA ALL-PURPOSE ACKNOWLEDGMENT

State of California
County of San Diego
on April 10, 2007 before me, Patricia Maxwell, Notary Public
personally appeared Patricia Gribble

who proved to me on the basis of satisfactory evidence to be the person(s) whose name(s) is/are subscribed to the within instrument and acknowledged to me that he/she/they executed the same in his/her/their authorized capacity(ies), and that by his/her/their signature(s) on the instrument the person(s), or the entity upon behalf of which the person(s) acted, executed the instrument.

I certify under PENALTY OF PERJURY under the laws of the State of California that the foregoing paragraph is true and correct.

WITNESS my hand and official seal.
Signature [redacted]

OPTIONAL

Description of Attached Document
Title or Type of Document: South Mission Beach Lifeguard Station Site
Number of Pages:
Signer(s) Other Than Named Above:

Capacity(ies) Claimed by Signer(s)

Signer's Name:
Individual
Corporate Officer — Title(s):
Partner — Limited / General
Attorney in Fact
Trustee
Guardian or Conservator
Other:
Signer Is Representing:

Signer's Name:
Individual
Corporate Officer — Title(s):
Partner — Limited / General
Attorney in Fact
Trustee
Guardian or Conservator
Other:
Signer Is Representing:

CALIFORNIA ALL-PURPOSE ACKNOWLEDGMENT

State of California
County of San Diego
on April 10, 2007 before me, Patricia Maxwell, Notary Public
personally appeared Brad Sherman

who proved to me on the basis of satisfactory evidence to be the person(s) whose name(s) is/are subscribed to the within instrument and acknowledged to me that he/she/they executed the same in his/her/their authorized capacity(ies), and that by his/her/their signature(s) on the instrument the person(s), or the entity upon behalf of which the person(s) acted, executed the instrument.

I certify under PENALTY OF PERJURY under the laws of the State of California that the foregoing paragraph is true and correct.

WITNESS my hand and official seal.
Signature [redacted]

OPTIONAL

Description of Attached Document
Title or Type of Document: South Mission Beach Lifeguard Station
Number of Pages:
Signer(s) Other Than Named Above:

Capacity(ies) Claimed by Signer(s)

Signer's Name:
Individual
Corporate Officer — Title(s):
Partner — Limited / General
Attorney in Fact
Trustee
Guardian or Conservator
Other:
Signer Is Representing:

Signer's Name:
Individual
Corporate Officer — Title(s):
Partner — Limited / General
Attorney in Fact
Trustee
Guardian or Conservator
Other:
Signer Is Representing:

HEARING OFFICER
RESOLUTION NO. 5904
SITE DEVELOPMENT PERMIT NO. 167971
SOUTH MISSION BEACH LIFEGUARD STATION

WHEREAS, The Engineering and Capital Projects Department, Owner/Permittee, filed an application with the City of San Diego for a permit to demolish the existing South Mission Beach Lifeguard Station and construct a replacement 2,725 square foot Lifeguard Station with flood-resistant observation tower, first deck area, flagpole area, ground-level enclosed parking/storage for safety vehicles and equipment, and restrooms (as described in and identified by size, dimension, quantity, type, and location on the approved Exhibits "A," and corresponding conditions of approval for the associated Permit No. 167971, on portions of a 0.75-acre site;

WHEREAS, the project site is located at 700, South Jetty Road in the R-S, R1B, and AK Zones of the Mission Beach Community Plan Area;

WHEREAS, the project site is legally described as Block No. 6381, Mission Beach, Map No. 1806;

WHEREAS, on September 27, 2006, the Hearing Officer of the City of San Diego considered Site Development Permit No. 167971, pursuant to the Land Development Code of the City of San Diego; NOW, THEREFORE,

BE IT RESOLVED by the Hearing Officer of the City of San Diego as follows:

That the Hearing Officer adopts the following written Findings, dated September 27, 2006.

FINDINGS:

Site Development Permit - Section 126.0504

A. Findings for all Site Development Permits

1. The proposed development will not adversely affect the applicable land use plan;

The project would demolish the existing lifeguard tower and construct a new lifeguard tower at South Mission Beach. The proposed tower would be consistent with the City of San Diego's Multiple Species Conservation Program (MSCP) Subarea Plan.

The project would demolish an existing lifeguard tower and construct a new lifeguard tower at South Mission Beach. The project's footprint will not be enlarged in an environmentally sensitive area. Therefore, the proposed development will not encroach into any sensitive habitat or vegetation. The proposed new lifeguard station would not physically accentuate or aggravate the beach erosion issue and has been designed to eliminate the impact of this issue. The station would be constructed in an orientation perpendicular to the shoreline, and, therefore, would present no increase in seaward dimension to the public view corridor to the east of the project site. This would help preserve public views by the construction of a new station that would not encroach seaward. The project is also proposed to be located adjacent to the existing paved water and

the project would support the open space preservation called for in the Precise Plan and has been designed to minimize public view blockage, the proposed is consistent with the Precise Plan. Therefore, the proposed development will not adversely affect the applicable land use plan.

2. The proposed development will not be detrimental to the public health, safety, and welfare; and

The project would demolish an existing lifeguard tower and construct a new lifeguard tower at South Mission Beach. As a preliminary objective, a new, one-million gallon lifeguard station facility incorporates the needs, health, and welfare of the public. The project is an enhancement to the public welfare in that it would encourage increased public use of the beach and the assurance provided by this coastal construction. The project would improve beach accessibility and enhance the beach recreational opportunities. While project may present safety to beachgoers, the project has been designed to minimize impacts to public users to the extent practicable. The Negative Declaration prepared for this project evaluated the visual quality issue and concluded that the project would not have a significant impact to public views, and this contemplation would be required.

The Negative Declaration also examined potential geological hazards associated with the project and concluded that proper engineering design of all new structures would ensure that the potential for geological impacts from regional hazards would not be significant, and that no mitigation would be required. Compliance with the City's Grading Regulations would be required during construction activities and would include all footings, the retaining wall/stem cycle, letter with fillets chair and sand traps, and the placement of sand guards at the entrance to the construction site, as the proposed has addressed health, safety and welfare issues including visual, geologic and water quality aspects of the project, and concluded there are no significant impacts, the proposed development will enhance public health, safety and welfare.

3. The proposed development will comply with the applicable regulations of the Land Development Code.

The project would demolish an existing lifeguard tower and construct a new lifeguard tower at South Mission Beach. The project complies with the applicable Land Development Code regulations, including building bulk/size, landscaping and parking requirements. The project has obtained all required water quality reviews through the project review, describing the type of all pollutants which would be generated during post-construction and the pollutants to be removed and treated by the proposed Best Management Practices. The project would also comply with City's Stormwater Regulations. As the project would comply with building height, landscaping, parking and water quality requirements, the proposed lifeguard station would comply with the applicable regulations of the Land Development Code.

B. Supplemental Findings--Environmentally Sensitive Lands

1. The site is physically suitable for the design and siting of the proposed development and the development will result in minimum disturbance to environmentally sensitive lands;

The project would demolish an existing lifeguard tower and construct a new lifeguard tower at South Mission Beach. The site for the new construction is approximately 50 feet to the north of the existing lifeguard tower. The proposed site is immediately adjacent to an existing paved parking area and was selected by reviewing any disturbance to the beach area. The site will require minimal grading and would not alter the topography of the beach, which would minimize impacts to public views. As the project would allow the new lifeguard station to be located near portions of disturbed areas, and would allow the project to be erected to preserve public views, the project is physically suitable for the design and siting of the proposed development and the development will result in minimum disturbance to environmentally sensitive lands.

2. The proposed development will minimize the alteration of natural land forms and will not result in undue risk from geologic and erosional forces, flood hazards, or fire hazards;

The project would demolish an existing lifeguard tower and construct a new lifeguard tower at South Mission Beach. There are no sensitive natural landform areas on or in proximity to the site. The project would primarily consist of existing topography and does not propose steep slopes or cuts, reducing the susceptibility for landform alteration and flood hazards. Public access to the beach would continue. Based on the nature of the proposed construction, an increase in fire hazard is anticipated. The project would implement permanent maintenance Best Management Practices as required by the City of San Diego. Because of the project's relatively small size and distance from the beach, additional erosion of the beach or impacts to the local shoreline, and supply is not anticipated. Geologic review determined that the project has adequately addressed geologic conditions potentially affecting the project. Through project review, staff has determined there would be no erosional forces, flood hazards or fire hazards. Therefore, the proposed development would not likely alter the site would not result in substantial shore geologic and erosional forces, flood hazards, or fire hazards.

3. The proposed development will be sited and designed to prevent adverse impacts to any adjacent environmentally sensitive lands;

The project would demolish an existing lifeguard tower and construct a new lifeguard tower at South Mission Beach. The new lifeguard station would be constructed approximately 50 feet north of the existing tower and would be constructed slightly further from the shoreline. The new station would be constructed in an orientation perpendicular to the shoreline, and, therefore, this design would present no increase in seaward dimension to the public view corridor to the east of the project site. This would help preserve public views by the construction of a new station that would not encroach seaward. The project is also proposed to be located adjacent to the existing paved water and

would be consistent to the existing parking lot by not accessible pathway. In this way, the new lifeguard station would eliminate any visual disturbance to other coastal bluff areas, while preserving safety and security. Therefore, the proposed development would be sited and designed to prevent adverse impacts on any adjacent environmentally sensitive lands.

4. The proposed development will be consistent with the City of San Diego's Multiple Species Conservation Program (MSCP) Subarea Plan;

The project would demolish an existing lifeguard tower and construct a new lifeguard tower at South Mission Beach. The proposed development will be consistent with the City of San Diego's Multiple Species Conservation Program (MSCP) Subarea Plan.

5. The proposed development will not contribute to the erosion of public beaches or adversely impact local shoreline sand supply; and

The project would demolish an existing lifeguard tower and construct a new lifeguard tower at South Mission Beach. The project's footprint will not be enlarged in an environmentally sensitive area. Therefore, the proposed development will not encroach into any sensitive habitat or vegetation. The proposed new lifeguard station would not physically accentuate or aggravate the beach erosion issue and has been designed to eliminate the impact of this issue. The station would be constructed in an orientation perpendicular to the shoreline, and, therefore, would present no increase in seaward dimension to the public view corridor to the east of the project site. This would help preserve public views by the construction of a new station that would not encroach seaward. The project is also proposed to be located adjacent to the existing paved water and sewer supply is not anticipated. The project would comply with current best management practices for construction. As such, the development would not alter or pollute discharged from the project site or the erosion of public beaches or adversely impact local shoreline sand supply.

6. The nature and extent of mitigation required as a condition of the permit is reasonably related to, and calculated to alleviate, negative impacts created by the proposed development.

The project would demolish an existing lifeguard tower and construct a new lifeguard tower at South Mission Beach. No mitigation is required of this project. Therefore, the nature and extent of mitigation required as a condition of the permit is reasonably related to, and calculated to alleviate, negative impacts created by the proposed development.

BE IT FURTHER RESOLVED that, based on the Findings hereinbefore adopted by the Hearing Officer, Site Development Permit No. 167971 is hereby GRANTED by the Hearing Officer to the referenced Owner/Permittee, in the form, exhibits, terms and conditions as set forth in Permit No. 167971, a copy of which is attached hereto and made a part hereof.

Patricia Gribble
Development Project Manager
Development Services

Development Services

Adopted on: September 27, 2006

Job Order No. 339040

cc: Legislative Recorder, Planning Department

Project specifications, drawings and design are protected by common law copyright. All statements, specifications, notations and designs shall not be reproduced or used in whole or part for any purpose whatsoever without the written permission of Rob Wellington Quigley, FAIA. Visual contact with these documents shall constitute prima facie evidence of the acceptance of these restrictions. © Rob Wellington Quigley, FAIA

© COPYRIGHT October 15, 2014 8:55 AM

G-4

Rob Wellington Quigley, FAIA
2150 West Washington, Suite 202
San Diego, California 92110
Tel 619.692.9393
Fax 619.692.9394
[redacted]

SPEC. NO. 8147

LICENSED ARCHITECT
ROBERT WELLINGTON QUIGLEY
No. C-21715
Exp. 08.31.15
STATE OF CALIFORNIA

PLANS FOR THE CONSTRUCTION OF
South Mission Beach Lifeguard Station

Site Development Conditions | T4.0

CITY OF SAN DIEGO, CALIFORNIA
ENGINEERING & CAPITAL PROJECTS
ARCHITECTURAL ENGINEERING & CONTRACTS DIVISION
SHEET 64 OF 84 SHEETS

APPROVED
[redacted]
10/13/2014
FOR CITY ENGINEER — DATE

WBS S-00791
SUBMITTED BY
BRAD SHERMAN
PROJECT MANAGER

DESCRIPTION	BY	APPROVED	DATE	PE/ME#
ORIGINAL	RM/TT			YOUSIF BENTAMR PROJECT ENGINEER
				216-1662 CONST COORDINATES
				1656-6253 CONST COORDINATES

CONTRACTOR _____ DATE STARTED _____
INSPECTOR _____ DATE COMPLETED _____

32849-04-D

CALIFORNIA COASTAL COMMISSION

NOTICE OF INTENT TO ISSUE PERMIT
(Upon satisfaction of special conditions)

THIS IS NOT A COASTAL DEVELOPMENT PERMIT

STANDARD REQUIREMENTS:

SPECIAL CONDITIONS:

ORIGINAL

© COPYRIGHT October 15, 2014 Domusstudio LLP

G-5

Domusstudio Architecture / Domusstudio LLP
2150 West Washington, Suite 303
San Diego, California 92110

Tel 619.692.9393
Fax 619.692.9394
domusstudio.com

SPEC. NO. 8147

LICENSED ARCHITECT WAYNE HOLTAN No. C12113 REN 9.30.15 STATE OF CALIFORNIA

PLANS FOR THE CONSTRUCTION OF

South Mission Beach Lifeguard Station

Coastal Development Conditions T5.0

CITY OF SAN DIEGO, CALIFORNIA
ENGINEERING & CAPITAL PROJECTS
ARCHITECTURAL ENGINEERING & CONTRACTS DIVISION
SHEET 05 OF 94 SHEETS

WBS S-00791

APPROVED: FOR CITY ENGINEER — DATE 10/13/2014

SUBMITTED BY: JIHAD SLEIMAN, PROJECT MANAGER

DESCRIPTION	BY	APPROVED	DATE	FILMED
ORIGINAL	WH/TT			

YOUSIF BENYAMIN, PROJECT ENGINEER

218-1693 CCS27 COORDINATES

1858-6253 CCS83 COORDINATES

CONTRACTOR ______ DATE STARTED ______
INSPECTOR ______ DATE COMPLETED ______

32849-05-D

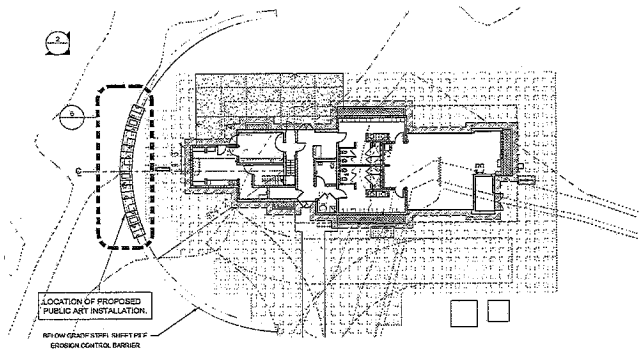

1 Site Plan
SCALE: 1" = 20'

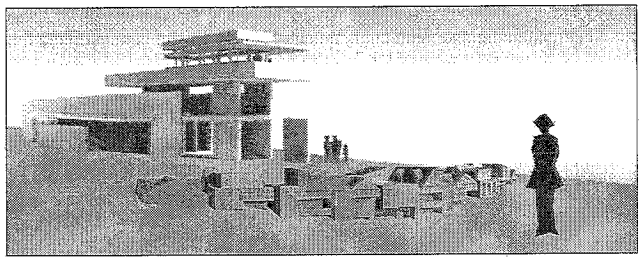

2 Concept Image - 'Beach Castles'
NTS

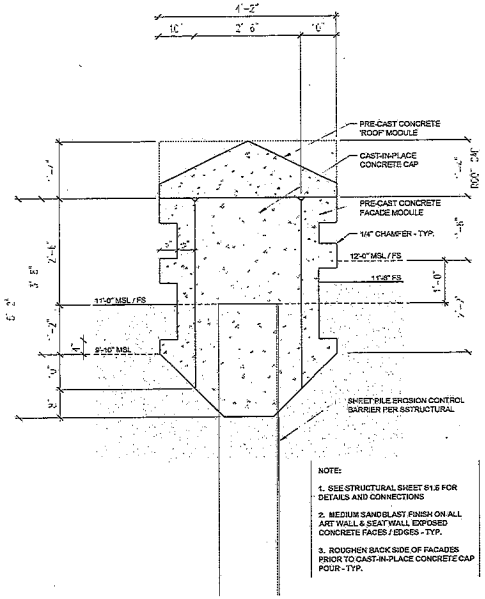

5 Partial Wall Section
3/4" = 1'-0"

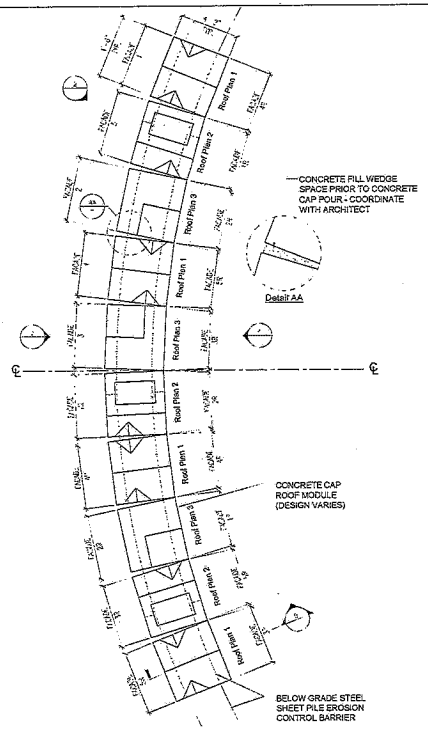

6 Partial Plan
1/4" = 1'-0"

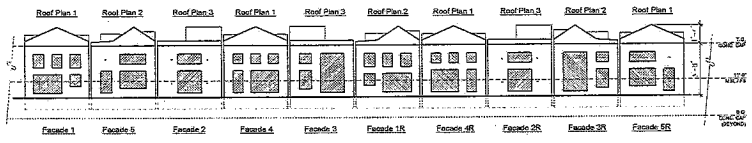

3 West Elevation
1/4" = 1'-0"

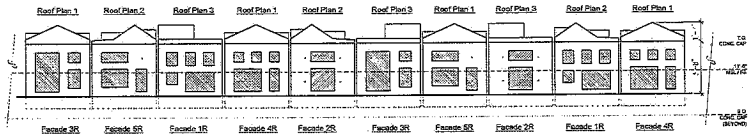

4 East Elevation
1/4" = 1'-0"

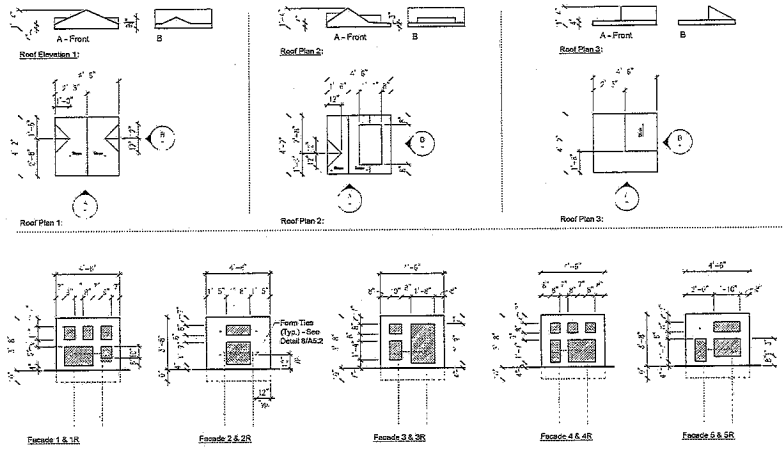

7 'Facades' and 'Roofs' - Plans & Elevations
1/4" = 1'-0"

CONCEPT ARTIST: ROMAN de SALVO

G-6

Dominy+Associates Architects & domusstudio
2100 West Washington, Suite 203
San Diego, California 92110
Tel 619.692.9393
Fax 619.692.9394
dominyassociates.com

SPEC. NO. 6147

LICENSED ARCHITECT
NO. C-13113
REN. 11-30-15
STATE OF CALIFORNIA

PLANS FOR THE CONSTRUCTION OF
South Mission Beach Lifeguard Station

Public Art Wall - 'Beach Castles'

PA0.1

CITY OF SAN DIEGO, CALIFORNIA
ENGINEERING & CAPITAL PROJECTS
ARCHITECTURAL ENGINEERING & CONSTRUCTS DIVISION
SHEET 68 OF 94 SHEETS

WBS S-00791

APPROVED
FOR CITY ENGINEER
10/13/2014
DATE

SUBMITTED BY
JIHAD SLEIMAN
PROJECT MANAGER

DESCRIPTION	BY	APPROVED	DATE	FILMED
ORIGINAL	WH/TI			

YOUSIF BONYAIN
PROJECT ENGINEER
218-1893
COZZI COORDINATES
1658-6253
CCSAS COORDINATES

CONTRACTOR _____ DATE STARTED _____
INSPECTOR _____ DATE COMPLETED _____

32849-06-D

Property of Dominy + Associates Architects & domusstudio. These drawings are protected by common law copyright. All parties who use, construct or are in any way involved with this project agree to indemnify and hold harmless Dominy + Associates Architects & domusstudio LLP and its consultants for any and all liability arising out of the use, construction or modification of these drawings without the written consent of Dominy + Associates Architects & domusstudio LLP.
© COPYRIGHT: October 15, 2014 all rights reserved

Proprietary design: These drawings and designs are protected by common law copyright. All patentable material contained herein and originating with Dominy + Associates Architects @ domusstudio LLP shall be the property of Dominy + Associates Architects @ domusstudio LLP
© COPYRIGHT October 10, 2014 at 7:56AM Plot by ablackwood.

GENERAL NOTES

1. APPROVAL OF THESE PLANS BY THE CITY ENGINEER DOES NOT AUTHORIZE ANY WORK TO BE PERFORMED UNTIL A PERMIT HAS BEEN ISSUED.

2. THE APPROVAL OF THIS PLAN OR ISSUANCE OF A PERMIT BY THE CITY OF SAN DIEGO DOES NOT AUTHORIZE THE CONTRACTOR TO VIOLATE ANY FEDERAL, STATE OR CITY LAWS, ORDINANCES, REGULATIONS, OR POLICIES, INCLUDING, BUT NOT LIMITED TO, THE FEDERAL ENDANGERED SPECIES ACT OF 1973 AND AMENDMENTS THERETO (16 USC SECTION 1531 ET.SEQ.)

3. THE CONTRACTOR SHALL BE RESPONSIBLE FOR SURVEY MONUMENTS AND/OR VERTICAL CONTROL BENCHMARKS WHICH ARE DISTURBED OR DESTROYED BY CONSTRUCTION. A LAND SURVEYOR MUST FIELD LOCATE, REFERENCE, AND/OR PRESERVE ALL HISTORICAL OR CONTROLLING MONUMENTS PRIOR TO ANY EARTHWORK. IF DESTROYED, A LAND SURVEYOR SHALL REPLACE SUCH MONUMENTS WITH APPROPRIATE MONUMENTS. A CORNER RECORD OR RECORD OF SURVEY, AS APPROPRIATE, SHALL BE FILED AS REQUIRED BY THE PROFESSIONAL LAND SURVEYORS ACT, SECTION 8771 OF THE BUSINESS AND PROFESSIONS CODE OF THE STATE OF CALIFORNIA. IF ANY VERTICAL CONTROL IS TO BE DISTURBED OR DESTROYED, THE CITY OF SAN DIEGO FIELD SURVEY SECTION MUST BE NOTIFIED, IN WRITING, AT LEAST 3 DAYS PRIOR TO THE CONSTRUCTION. THE CONTRACTOR WILL BE RESPONSIBLE FOR THE COST OF REPLACING ANY VERTICAL CONTROL BENCHMARKS DESTROYED BY THE CONSTRUCTION.

4. IMPORTANT NOTICE: SECTION 4216 OF THE GOVERNMENT CODE REQUIRES A DIG ALERT IDENTIFICATION NUMBER BE ISSUED BEFORE A "PERMIT TO EXCAVATE" WILL BE VALID. FOR YOUR DIG ALERT I.D. NUMBER, CALL UNDERGROUND SERVICE ALERT, TOLL FREE 1-800-422-4133, TWO DAYS BEFORE YOU DIG.

5. CONTRACTOR SHALL IMPLEMENT AN EROSION AND SEDIMENT CONTROL PROGRAM DURING THE PROJECT GRADING AND/OR CONSTRUCTION ACTIVITIES. THE PROGRAM SHALL MEET ALL APPLICABLE REQUIREMENTS OF THE STATE WATER RESOURCE CONTROL BOARD AND THE CITY OF SAN DIEGO MUNICIPAL CODE AND STORM WATER STANDARDS MANUAL.

6. ALL EXISTING AND/OR PROPOSED PUBLIC UTILITY SYSTEM AND SERVICE FACILITIES SHALL BE INSTALLED UNDERGROUND IN ACCORDANCE WITH SECTION 144.0240 OF THE MUNICIPAL CODE.

7. PRIOR TO ANY DISTURBANCE TO THE SITE, EXCLUDING UTILITY MARK-OUTS AND SURVEYING, THE CONTRACTOR SHALL MAKE ARRANGEMENTS FOR A PRE-CONSTRUCTION MEETING WITH THE CITY OF SAN DIEGO FIELD ENGINEERING DIVISION (858) 627-3200.

8. DEVIATIONS FROM THESE SIGNED PLANS WILL NOT BE ALLOWED UNLESS A CONSTRUCTION CHANGE IS APPROVED BY THE CITY ENGINEER OR THE CHANGE IS REQUIRED BY THE CITY INSPECTOR.

9. AS-BUILT DRAWINGS MUST BE SUBMITTED TO THE RESIDENT ENGINEER PRIOR TO ACCEPTANCE OF THIS PROJECT BY THE CITY OF SAN DIEGO.

10. AN AS-GRADED GEOTECHNICAL REPORT AND A SET OF THE REDLINE GRADING PLANS SHALL BE SUBMITTED AT AREA 3 ON THE THIRD FLOOR OF DEVELOPMENT SERVICES WITHIN 30 CALENDAR DAYS OF THE COMPLETION OF GRADING. AN ADDITIONAL SET SHALL BE PROVIDED TO THE RESIDENT ENGINEER OF THE FIELD ENGINEERING DIVISION AT 9485 AERO DR.

11. THE AREA WHICH IS DEFINED AS A NON GRADING AREA AND WHICH IS NOT TO BE DISTURBED SHALL BE STAKED AND DELINEATED WITH HIGH VISIBILITY FENCE PRIOR TO START OF THE WORK. THE PERMIT APPLICANT AND ALL OF THEIR REPRESENTATIVES OR CONTRACTORS SHALL COMPLY WITH THE REQUIREMENTS FOR PROTECTION OF THIS AREA AS REQUIRED BY ANY APPLICABLE AGENCY. ISSUANCE OF THE CITY'S GRADING PERMIT SHALL NOT RELIEVE THE APPLICANT OR ANY OF THEIR REPRESENTATIVES OR CONTRACTORS FROM COMPLYING WITH ANY STATE OR FEDERAL REQUIREMENTS BY AGENCIES INCLUDING BUT NOT LIMITED TO CALIFORNIA REGIONAL WATER QUALITY CONTROL BOARD, CALIFORNIA DEPARTMENT OF FISH AND GAME. COMPLIANCE MAY INCLUDE OBTAINING PERMITS, OTHER AUTHORIZATIONS, OR COMPLIANCE WITH MANDATES BY ANY APPLICABLE STATE OR FEDERAL AGENCY.

12. ALL ONSITE, PRIVATE IMPROVEMENTS SHOWN ON THIS DRAWING ARE FOR INFORMATION ONLY. THE CITY ENGINEERS'S APPROVAL OF THE DRAWING, IN NO WAY CONSTITUTES AN APPROVAL OF SAID PRIVATE IMPROVEMENTS. A SEPARATE PERMIT FOR SUCH IMPROVEMENTS MAY BE REQUIRED.

13. CONTRACTOR SHALL COORDINATE WTH ADJACENT PROPERTY OWNERS FOR ACCESS AND COMMENCEMENT OF CONSTRUCTION.

14. CONTRACTOR TO ENSURE CONSTRUCTION DOES NOT EXCEED HOURS OF CONSTRUCTION BETWEEN 8:00AM AND 3:30PM.

SPECIAL NOTES

THE FOLLOWING NOTES ARE PROVIDED TO GIVE DIRECTION TO THE CONTRACTOR BY THE ENGINEER OF WORK. THE CITY ENGINEER'S SIGNATURE ON THESE PLANS DOES NOT CONSTITUTE APPROVAL OF THESE NOTES AND THE CITY WILL NOT BE RESPONSIBLE FOR THEIR ENFORCEMENT.

1. THE ENGINEER OF WORK SHALL NOT BE RESPONSIBLE FOR THE CONTRACTOR'S FAILURE TO CARRY OUT CONSTRUCTION WORK IN ACCORDANCE WITH THE CONTRACT DOCUMENTS, NOR SHALL THE ENGINEER BE REQUIRED TO SUPERVISE CONDUCT OF THE WORK OF THE CONSTRUCTION PROCEDURES AND SAFETY PROCEDURES FOLLOWED BY THE CONTRACTOR OR SUBCONTRACTORS OR THEIR RESPECTIVE EMPLOYEES OR BY ANOTHER PERSON AT THE JOB SITE OTHER THAN THAT OF THE ENGINEER'S EMPLOYEES.
2. THE LOCATIONS OF ANY UNDERGROUND STRUCTURES AS SHOWN ON THESE PLANS HAVE BEEN OBTAINED FROM AVAILABLE RECORDS AND ARE SHOWN FOR THE BENEFIT OF THE CONTRACTOR. THE CONTRACTOR SHALL TAKE ALL NECESSARY PRECAUTIONARY MEASURES TO PROTECT ALL UNDERGROUND OR OVERHEAD STRUCTURES WHETHER SHOWN OR NOT ON THESE DRAWINGS
3. THE CONTRACTOR SHALL VERIFY THE LOCATION OF AND PROTECT ALL EXISTING IMPROVEMENTS BEFORE AND DURING CONSTRUCTION. CONTRACTOR SHALL PROVIDE PICTURES AND VIDEO OF SURROUNDING HOUSES, LANDSCAPE, AND EXISTING INFRASTRUCTURE PRIOR TO CONSTRUCTION. CONTRACTOR TO PROVIDE COPIES OF VIDEOS AND PICTURES TO THE CITY OF SAN DIEGO.
4. CONTRACTOR SHALL MAKE EXPLORATION EXCAVATIONS AND LOCATE EXISTING UNDERGROUND FACILITIES SUFFICIENTLY AHEAD OF CONSTRUCTION TO PERMIT REVISIONS TO PLANS IF REVISIONS ARE NECESSARY BECAUSE OF LOCATION OF EXISTING FACILITIES.
5. CONSTRUCTION CONTRACTOR AGREES THAT IN ACCORDANCE WITH GENERALLY ACCEPTED CONSTRUCTION PRACTICES, CONSTRUCTION CONTRACTOR WILL BE REQUIRED TO ASSUME SOLE AND COMPLETE RESPONSIBILITY FOR THE JOB SITE CONDITIONS DURING THE COURSE OF CONSTRUCTION OF THE PROJECT INCLUDING SAFETY OF ALL PERSONS AND PROPERTY; THAT THIS REQUIREMENT SHALL BE MADE TO APPLY CONTINUOUSLY AND NOT BE LIMITED TO NORMAL WORKING HOURS, AND CONSTRUCTION CONTRACTOR FURTHER AGREES TO DEFEND, INDEMNIFY AND HOLD DESIGN PROFESSIONAL HARMLESS FROM ANY AND ALL LIABILITY, REAL OR ALLEGED, IN CONNECTION WITH THE PERFORMANCE OF WORK ON THIS PROJECT, EXCEPTING LIABILITY ARISING FROM THE SOLE NEGLIGENCE OF THE DESIGN PROFESSIONAL.

GRADING NOTES

1. GRADING SHOWN ON THESE PLANS SHALL BE IN CONFORMANCE WITH CURRENT STANDARD SPECIFICATIONS AND CHAPTER 14, ARTICLE 2, DIVISION 1, OF THE SAN DIEGO MUNICIPAL CODE.

2. GRADED, DISTURBED, OR ERODED AREAS THAT WILL NOT BE PERMANENTLY PAVED, COVERED BY STRUCTURE, OR PLANTED FOR A PERIOD OVER 90 DAYS, SHALL BE TEMPORARILY RE-VEGETATED WITH A NON-IRRIGATED HYDROSEED MIX, GROUND COVER, OR EQUIVALENT MATERIAL. SEE SHEET 10 FOR MIX AND SPECIFICATIONS.

3. THE PRECISE LOCATION OF SUBDRAINS SHALL BE ACCURATELY LOCATED AND SHOWN ON THE FINAL AS-GRADED PLANS.

CONSTRUCTION CHANGE TABLE		
	DATE	AFFECTED OR ADDED SHEET NUMBERS

DECLARATION OF RESPONSIBLE CHARGE

I HEREBY DECLARE THAT I AM THE ENGINEER OF WORK FOR THIS PROJECT, THAT I HAVE EXERCISED RESPONSIBLE CHARGE OVER THE DESIGN OF THE PROJECT AS DEFINED IN SECTION 6703 OF THE BUSINESS AND PROFESSIONS CODE, AND THAT THE DESIGN IS CONSISTENT WITH CURRENT STANDARDS.

I UNDERSTAND THAT THE CHECK OF PROJECT DRAWINGS AND SPECIFICATIONS BY THE CITY OF SAN DIEGO IS CONFINED TO A REVIEW ONLY AND DOES NOT RELIEVE ME, AS ENGINEER OF WORK, OF MY RESPONSIBILITIES FOR PROJECT DESIGN.

Robert R. Gehrke — 10/10/14
ROBERT R. GEHRKE — R.C.E. No. 45717 — DATE

IMPROVEMENT PLANS FOR:

SOUTH MISSION BEACH LIFEGUARD STATION

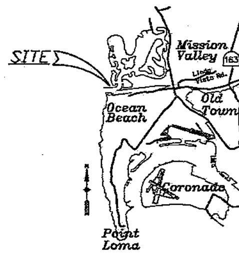

VICINITY MAP

NO SCALE

GRADING AND GEOTECHNICAL SPECIFICATIONS

1. ALL GRADING SHALL BE DONE UNDER OBSERVATION AND TESTING BY A QUALIFIED CIVIL ENGINEER OR GEOTECHNICAL ENGINEER AND, IF REQUIRED, BOTH A QUALIFIED CIVIL ENGINEER OR GEOTECHNICAL ENGINEER AND AN ENGINEERING GEOLOGIST. ALL GRADING MUST BE PERFORMED IN ACCORDANCE WITH APPLICABLE CITY ORDINANCE AND THE RECOMMENDATIONS AND SPECIFICATIONS SET FORTH IN THE SOILS REPORT OR GEOLOGICAL/GEOTECHNICAL INVESTIGATIONS ENTITLED:

GEOTECHNICAL INVESTIGATION AND COASTAL ENGINEERING REPORT, SOUTH MISSION BEACH LIFEGUARD TOWER (ALL ADDENDUMS)
PROJECT NUMBER: 2231
PREPARED BY: TERRACOSTA CONSULTING GROUP, INC. DATED: FEBRUARY 16, 2005

2. ALL FILL MATERIAL SHALL BE COMPACTED TO A MINIMUM OF 90% OF THE MAXIMUM DRY DENSITY AS DETERMINED BY THE MOST RECENT VERSION OF A.S.T.M. D-1557 OR AN APPROVED ALTERNATIVE STANDARD.

3. AT THE COMPLETION OF THE GRADING OPERATIONS FOR THE EARTHWORK SHOWN ON THIS PLAN, AN AS-GRADED SOILS REPORT, OR IF REQUIRED, AN AS-GRADED SOILS AND GEOLOGICAL REPORT WILL BE PREPARED IN ACCORDANCE WITH THE MOST RECENT EDITION OF THE CITY OF SAN DIEGO TECHNICAL GUIDELINES FOR GEOTECHNICAL REPORTS. THE FINAL "AS-GRADED" GEOTECHNICAL REPORT WILL BE SUBMITTED TO THE FIELD ENGINEERING SECTION OF PUBLIC WORKS AND A SECOND COPY TO THE GEOLOGY SECTION OF THE DEVELOPMENT SERVICES DEPARTMENT WITHIN 15 DAYS OF THE COMPLETION OF GRADING. WHERE GEOLOGIC INSPECTION IS INDICATED IN THE PERMIT OR PROJECT PLANS, REPORTS OR SPECIFICATIONS, THE FINAL REPORT MUST ALSO BE REVIEWED AND SIGNED BY A CALIFORNIA CERTIFIED ENGINEERING GEOLOGIST.

4. IF THE GEOTECHNICAL CONSULTANT OF RECORD IS CHANGED FOR THE PROJECT, THE WORK SHALL BE STOPPED UNTIL THE REPLACEMENT HAS AGREED IN WRITING TO ACCEPT THE RESPONSIBILITY WITHIN THE AREA OF THEIR TECHNICAL COMPETENCE FOR APPROVAL UPON COMPLETION OF THE WORK. IT SHALL BE THE DUTY OF THE PERMITTEE TO NOTIFY THE CITY ENGINEER AND THE LDR GEOLOGY SECTION OF THE DEVELOPMENT SERVICES DEPARTMENT IN WRITING OF SUCH CHANGE PRIOR TO THE RECOMMENCEMENT OF GRADING.

5. THESE GRADING PLANS HAVE BEEN REVIEWED BY THE UNDERSIGNED AND FOUND TO BE IN CONFORMANCE WITH THE RECOMMENDATIONS AND SPECIFICATIONS CONTAINED IN THE REFERENCED GEOTECHNICAL REPORT(S) PREPARED FOR THIS PROJECT.

October 10, 2014
WALTER CRAMPTON — R.C.E. 23792, RGE 245 — DATE

October 10, 2014
GREGORY SPAULDING — C.E.G. 1863 — DATE

TERRACOSTA CONSULTING GROUP INC.
Phone No. (858) 573-6900
6. FOR SOIL FILE SEE CITY RECORD S -

(Stamps: PROFESSIONAL GEOLOGIST, STATE OF CALIFORNIA; REGISTERED PROFESSIONAL ENGINEER, WALTER F. CRAMPTON, No. 245, GEOTECHNICAL, STATE OF CALIFORNIA)

SHEET INDEX

TITLE SHEET C-1
GENERAL NOTES C-2
DETAILS C-3
DETAILS C-4
DEMOLITION PLAN C-5
DEMOLITION PLAN C-6
GRADING AND DRAINAGE PLAN C-7
UTILITY PLAN C-8
UTILITY PLAN C-9
EROSION CONTROL NOTES AND DETAILS C-10
EROSION CONTROL PLAN C-11
HORIZONTAL CONTROL PLAN C-12

OWNER/APPLICANT

DOMINY & ASSOCIATES
2150 W. WASHINGTON ST. STE. 303, SAN DIEGO, CA 92110
(619) 692-9393

REFERENCE DRAWINGS

SOUTH MISSION BEACH PARK IMPROVEMENT PLANS 12177-D, 19158-D

SITE ADDRESS

700 NORTH JETTY ROAD, SAN DIEGO, CA 92109

ASSESSORS PARCEL NUMBER

423-750-01-00

TOPOGRAPHY SOURCE

RBF CONSULTING
9755 CLAIREMONT MESA BLVD., STE. 100
SAN DIEGO, CA 92124
FIELD SURVEY PERFORMED 10/03

BENCHMARK

CITY OF SAN DIEGO, MISSION AND CAPISTRANO PLACE
SEBP WITH AN ELEVATION OF 5.029 (MEAN SEA LEVEL, NGVD 29).

NOTE: IN OCTOBER 2011, THE CITY OF SAN DIEGO UPDATED THE ELEVATION OF THIS BENCHMARK TO 4.94. CONTRACTOR TO USE ELEVATION 5.029 FOR CONSTRUCTION STAKING.

LEGAL DESCRIPTION

PUEBLO LOT 1803 OF PUEBLO LANDS OF SAN DIEGO, IN THE CITY OF SAN DIEGO, COUNTY OF SAN DIEGO, STATE OF CALIFORNIA, ACCORDING TO THE MAP THEREOF MADE BY JAMES PASCOE IN 1870, A COPY OF WHICH MAP IS FILED AS MISCELLANEOUS MAP NO. 36 IN THE OFFICE OF THE COUNTY RECORDER OF SAID COUNTY OF SAN DIEGO, BOUNDED ON THE NORTH BY THE WESTERLY EXTENSION OF THE SOUTH LINE OF BALBOA COURT IN MISSION BEACH, AS SAME IS SHOWN ON MAP THEREOF NO. 1809, FILED IN THE COUNTY RECORDER'S OFFICE; BOUNDED ON ENTRANCE TO MISSION BAY (FALSE BAY); BOUNDED ON THE NORTHEAST AND EAST BY THE SOUTHWESTERLY LINES OF OCEAN FRONT WALK IN MISSION BEACH, THE SOUTHWESTERLY LINE OF MISSION BOULEVARD IN MISSION BEACH, AND THE SOUTHWESTERLY LINE OF THE LAND DESCRIBED IN DEED FROM UNION TRUST COMPANY OF SAN DIEGO, TO CITY OF SAN DIEGO, DATED FEBRUARY 3, 1906 AND RECORDED IN BOOK 700, PAGE 386 OF DEEDS.

LEGEND

PROPOSED IMPROVEMENTS

IMPROVEMENT	STANDARD DWGS.	SYMBOL
RIGHT-OF-WAY LINE		
PROPERTY LINE		
LOT LINE		
6" CONCRETE CURB	SDG-150	
6" CONCRETE CURB & GUTTER	SDG-151	
SEWER TYPE CLEANOUT (SCO)	SC-01	
GATE VALVE	SDW-152, SDW-153	
THRUST BLOCK	SDW-151	
FIRE HYDRANT	SDW-104	
2" WATER SERVICE WITH 1.5" METER AND 2" BACKFLOW PREVENTOR	SDW-113, SDW-149, SDW-155	W
4" FIRE SERVICE WITH REDUCED PRESSURE BACKFLOW PREVENTOR	SDW-105, SDW-118	FS
CURB RAMP (TYPE A)	SDG-132	
CONCRETE DRIVEWAY	SDG-159	
VEHICULAR CONCRETE PAVING		
PEDESTRIAN CONCRETE PAVING (SIDEWALK)	SDG-109, SDG-155, G-10	
CONCRETE EROSION CONTROL MAT ARMORFLEX CLASS 55S OR EQUAL		
AC PAVEMENT		
TRUNCATED DOMES	SDG-130	
GRADE BREAK		
DIRECTION OF FLOW (1% MIN.)		
GRADING DAYLIGHT LINE		
CONTOUR		10

EXISTING IMPROVEMENTS

ITEM	SYMBOL
EXISTING CONTOUR	150
EXISTING WATER	
EXISTING FIRE HYDRANT	
EXISTING GATE VALVE	
EXISTING SEWER	
EXISTING SEWER MANHOLE	
EXISTING GAS	G
EXISTING STREET LIGHT	
EXISTING STREET LIGHT	
EXISTING PED RAMP	
EXISTING DRIVEWAY	

WORK TO BE DONE

THE IMPROVEMENTS CONSIST OF THE FOLLOWING WORK TO BE DONE ACCORDING TO THESE PANS AND SPECIFICATIONS AND STANDARD DRAWINGS OF THE CITY OF SAN DIEGO.

STANDARD SPECIFICATIONS:

DOCUMENT NO.	DESCRIPTION
PITS070112-01	STANDARD SPECIFICATIONS FOR PUBLIC WORKS CONSTRUCTION (GREENBOOK), 2012 EDITION
PITS070112-02	CITY OF SAN DIEGO STANDARD SPECIFICATIONS FOR PUBLICWORKS CONSTRUCTION (WHITEBOOK), 2012 EDITION
PITS070112-04	CALIFORNIA DEPARTMENT OF TRANSPORTATION MANUAL OF UNIFORM TRAFFIC CONTROL DEVICES, 2012 EDITION
PITS070112-06	CALIFORNIA DEPARTMENT OF TRANSPORTATION U.S CUSTOMARY STANDARD SPECIFICATIONS, 2010 EDITION

STANDARD DRAWINGS:

DOCUMENT NO.	DESCRIPTION
PITS070112-03	CITY OF SAN DIEGO STANDARD DRAWINGS FOR PUBLIC WORKS CONSTRUCTION, 2012 EDITION
PITS070112-05	CALIFORNIA DEPARTMENT OF TRANSPORTATION U.S CUSTOMARY STANDARD PLANS, 2010 EDITION

ABBREVIATIONS

AC	ASPHALT CONCRETE
C.I.	CAST IRON
CONC	CONCRETE
CONN	CONNECTION
℄	CENTERLINE
DDCV	DOUBLE DETECTOR CHECK VALVE
DW	DOMESTIC WATER
EX	EXISTING
FF	FINISH FLOOR
IE	INVERT ELEVATION
NAT'L	NATIONAL
NTS	NOT TO SCALE
O.C.	ON CENTER
ℙ	PROPERTY LINE
POC	POINT OF CONNECTION
PSI	POUNDS PER SQUARE INCH
RIM	RIM ELEVATION
R/W	RIGHT OF WAY
RWQCB	REGIONAL WATER QUALITY CONTROL BOARD
SCO	SEWER CLEANOUT
SDRSD	SAN DIEGO REGIONAL STANDARD DRAWING
SMH	SEWER MANHOLE
STD	STANDARD
SWPPP	STORM WATER POLLUTION PREVENTION PLAN
TC	TOP OF CURB
TP	TOP OF PIPE
TYP.	TYPICAL

South Mission Beach Lifeguard Station
700 N. Jetty Road

C-1

RBF CONSULTING
A [redacted] Company
9755 CLAIREMONT MESA BLVD.
SAN DIEGO, CA. 92124
858-614-5000

SPEC. NO. 8147
(Stamp: REGISTERED PROFESSIONAL ENGINEER, ROBERT R. GEHRKE, No. 45717, Exp. 12/31/14, CIVIL, STATE OF CALIFORNIA)

PLANS FOR THE CONSTRUCTION OF
South Mission Beach Lifeguard Station

Title Sheet — C-1

CITY OF SAN DIEGO, CALIFORNIA
ENGINEERING & CAPITAL PROJECTS
ARCHITECTURAL ENGINEERING & CONTRACTS DIVISION
SHEET 7 OF 94 SHEETS

WBS S-00791

APPROVED: 10/13/2014
FOR CITY ENGINEER — DATE

SUBMITTED BY: JIHAD SLEIMAN, PROJECT MANAGER

DESCRIPTION	BY	APPROVED	DATE	FILMED
ORIGINAL	WH/TT			

YOUSIF BENYAMIN, PROJECT ENGINEER
215-1693
CCS27 COORDINATES
1858-6253
CCS83 COORDINATES

CONTRACTOR ______ DATE STARTED ______
INSPECTOR ______ DATE COMPLETED ______

32849– 7 –D

SEWER NOTES

1. LIFEGUARD STATION SHALL RECEIVE A 4-INCH SEWER LATERAL WITH THREE POINTS OF CONNECTION AS SHOWN.

2. LOCATE SEWER LATERAL A MINIMUM OF TEN FEET FROM TREES.

3. ALL HORIZONTAL SEPARATION DIMENSIONS SHOWN BETWEEN WATER AND SEWER MAINS SHALL BE MEASURED FROM THE NEAREST EDGE OF EACH PIPELINE PER STATE OF CALIFORNIA, DEPARTMENT OF HEALTH SERVICES, BASIC SEPARATION STANDARDS. MINIMUM SEPARATION BETWEEN WATER AND SEWER MAINS SHALL BE 10 FOOT HORIZONTAL AND 1 FOOT VERTICAL.

4. ALL PROPOSED PUBLIC SEWER FACILITY INSTALLATIONS SHALL BE CONSTRUCTED WITH MATERIALS CURRENTLY LISTED IN THE MOST CURRENT EDITION OF THE CITY OF SAN DIEGO WATER AND MUNICIPAL SEWER APPROVED MATERIALS LIST AS REFERENCED IN THE STANDARD SPECIFICATIONS FOR PUBLIC WORKS CONSTRUCTION.

5. ADDITIONAL NOTES MAY BE REQUIRED BY THE PLAN REVIEWER TO ADDRESS SPECIFIC PROJECT REQUIREMENTS AND MAY INCLUDE THE FOLLOWING: .

A. ALL PROPOSED SEWER SHOWN ON THESE PLANS SHALL ADHERE TO THE REQUIREMENTS OF THE CITY OF SAN DIEGO, SEWER DESIGN GUIDE, DOCUMENT NO. 769875, FILED JUNE 11, 2001.

B. FOR ALL SEWER PLANS: THE CONTRACTOR SHALL OBSERVE AND COMPLY WITH ALL FEDERAL, STATE, AND LOCAL LAWS, ORDINANCES, CODES, ORDERS, AND REGULATIONS WHICH IN ANY MANNER AFFECT THE CONDUCT OF THE WORK, SPECIFICALLY AS IT RELATES TO SEWAGE SPILLS. THE CONTRACTOR SHALL BE FULLY RESPONSIBLE FOR PREVENTING SEWAGE SPILLS, FOR

CONTAINING SEWAGE SPILLS, AND FOR RECOVERY AND LEGAL DISPOSAL OF ANY SPILLED SEWAGE, AND FOR ANY FINES, PENALTIES, CLAIMS AND LIABILITY ARISING FROM CAUSING A SEWAGE SPILL, AND FOR ANY VIOLATION OF ANY LAW, ORDINANCE, CODE, ORDER, OR REGULATION AS A RESULT OF THE SPILL(S).

C. FOR WORK INVOLVING CONNECTION TO EXISTING FACILITIES: PRIOR TO THE START OF CONSTRUCTION WHICH INVOLVES ANY EXISTING WASTEWATER FACILITIES, THE CONTRACTOR SHALL BE RESPONSIBLE FOR DEVELOPING AND SUBMITTING TO THE RESIDENT ENGINEER FOR REVIEW AND APPROVAL, A WASTEWATER FLOW DIVERSION PLAN IN COMPLIANCE WITH THE CITY'S POLICY OF "ZERO SPILLS" AT LEAST FIFTEEN WORKING DAYS PRIOR TO IMPLEMENTATION OF THE PLAN. THE DIVERSION PLAN SHALL INCLUDE AN EMERGENCY RESPONSE PLAN INDICATING THE PROCEDURES, EQUIPMENT, AND ACTIVITIES THAT WILL BE IMPLEMENTED IN THE EVENT OF AN EMERGENCY SHUTDOWN OR FAILURE OF THE FLOW DIVERSION EQUIPMENT USED FOR CONSTRUCTION THE CONTRACTOR SHALL BE RESPONSIBLE FOR IMPLEMENTATION OF THE EMERGENCY PLAN IN ACCORDANCE WITH SECTION 7-8.8.1 OF THE 2003 CITY OF SAN DIEGO SUPPLEMENT AMENDMENTS (DOC. NO. AEC 701041) TO THE STANDARD SPECIFICATIONS FOR PUBLIC WORKS CONSTRUCTION.

WATER NOTES

1. LIFEGUARD STATION SHALL RECEIVE A 2-INCH WATER SERVICE AS SHOWN.

2. ALL CONNECTIONS TO EXISTING WATER MAINS ARE TO BE DONE BY THE CITY'S DEPARTMENT FOR WHICH THE FOLLOWING FEES WILL BE CHARGED. IF THE WATER CONNECTIONS ARE NOT READY TO BE MADE AND THE FEES PAID, THE CITY RESERVES THE RIGHT TO ADJUST THE FEES ACCORDING TO THE FEE SCHEDULE IN EFFECT AT THE TIME THE CONNECTIONS ARE MADE. IT IS THE RESPONSIBILITY OF THE CONTRACTOR TO EXPOSE THE EXISTING MAIN AT THE CONNECTION POINT AND TO INSTALL THE NEW MAIN AT THE ALIGNMENT AND GRADE WHICH WILL PERMIT THE CITY TO MAKE A "STRAIGHT-IN" CONNECTION WITHOUT USING MORE THAN 10 LINEAL FEET OF PIPE.

	COST	TYPE OF CONNECTION	SHEET
ITEM NO.1:	$ 318	8" WET TAP	0-9

3. FOR COORDINATION OF THE SHUTDOWN OF TRANSMISSION MAINS (16 INCHES AND LARGER), CONTACT THE CITY'S SENIOR WATER DISTRIBUTION OPERATIONS SUPERVISOR AT (619) 527-7465. FOR COORDINATION OF THE SHUTDOWN OF DISTRIBUTION MAINS (LESS THAN 16 INCHES), CONTACT THE CITY'S WATER OPERATIONS DISTRICT MANAGER AT (619) 527-3945. NO SHUTDOWN PROPOSED.

4. ALL VALVES WILL BE FLANGED TO CROSSES AND TEES. ONLY GATE VALVES SHALL BE USED IN FIRE HYDRANT INSTALLATIONS.

5. ALL PROPOSED WATER APPURTENANCES SHALL BE INSTALLED WITH MATERIALS LISTED IN THE SEPTEMBER 2013 PUBLIC UTILITIES DEPARTMENT FOR WATER APPROVED MATERIALS LIST.

6. HORIZONTAL AND VERTICAL CLEARANCES FROM WATER MAINS SHALL COMPLY WITH THE REGULATIONS SET FORTH BY THE CALIFORNIA DEPARTMENT OF PUBLIC HEALTH. ANY DEVIANCES FROM THESE REGULATIONS SHALL REQUIRE THE PLAN REVIEW AND APPROVAL OF THE DEPARTMENT OF PUBLIC HEALTH.

CORROSION NOTES

1. ALL BURIED DUCTILE AND GRAY CAST IRON PIPE, FITTINGS, VALVES AND APPURTENANCES SHALL BE COATED WITH A DIELECTRIC COATING: A LIQUID EPOXY COATING SYSTEM PER AWWA C-210 AT 24 MILS MINIMUM DRY FILM THICKNESS (MDFT), OR A COLD APPLIED THREE PART SYSTEM PETROLEUM WAX TAPE PER AWWA C-217, OR A 100% POLYURETHANE COATING OF 24 MILS MDFT SUITABLE FOR BURIED USE.

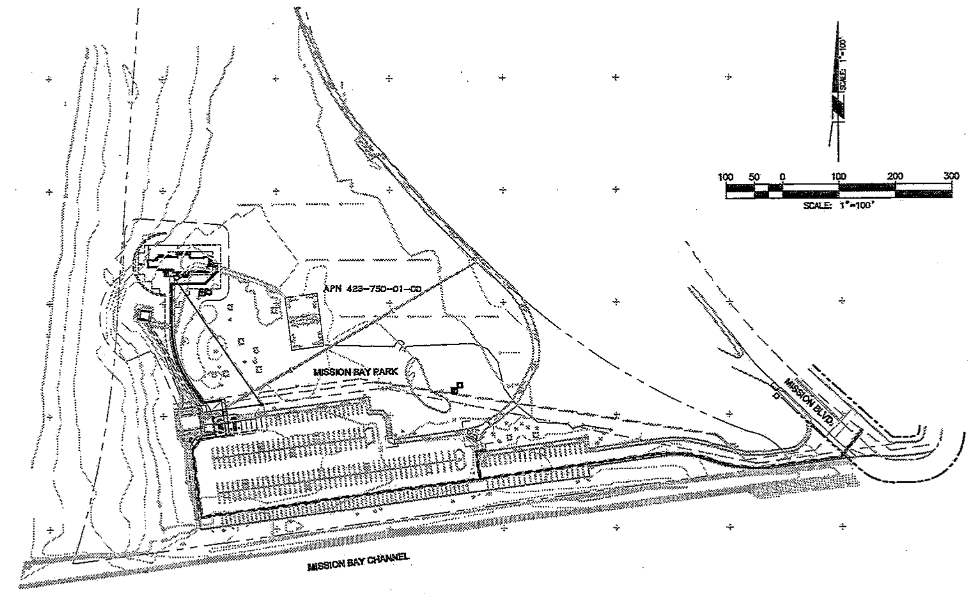

KEY MAP

SCALE: 1"=100'

C-2

RBF CONSULTING
A Baker Company
9755 CLAIREMONT MESA BLVD.
SAN DIEGO, CA. 92124
858-614-5000

SPEC. NO. 8147

PLANS FOR THE CONSTRUCTION OF
South Mission Beach Lifeguard Station

General Notes	C-2

CITY OF SAN DIEGO, CALIFORNIA
ENGINEERING & CAPITAL PROJECTS
ARCHITECTURAL ENGINEERING & CONTRACTS DIVISION
SHEET 8 OF 94 SHEETS

WBS S-00791

APPROVED: [signature] FOR CITY ENGINEER — 10/13/2014 DATE

SUBMITTED BY: JIHAD SLEIMAN, PROJECT MANAGER

DESCRIPTION	BY	APPROVED	DATE	FILMED
ORIGINAL	WH/TT			

YOUSIF BENYAMON
PROJECT ENGINEER
218-1693
CCS27 COORDINATES
1858-6253
CCS83 COORDINATES

CONTRACTOR ______ DATE STARTED ______
INSPECTOR ______ DATE COMPLETED ______

32849- 8 -D

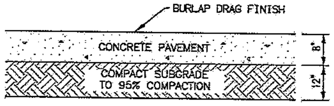

NOTES:

1. CONCRETE SHALL BE MINIMUM 560-B-3250 AND SHALL HAVE A MINIMUM MODULUS OF RUPTURE OF 600 PSI.
2. PAVEMENT JOINTS:
   A. BOTH LONGITUDINAL AND TRANSVERSE DOWELED CONSTRUCTION JOINTS SHALL BE CONSTRUCTED AT 8' INTERVALS (8'x8' SLABS) PER DETAIL C/C-3
   B. DOWELED EXPANSION JOINTS SHALL BE CONSTRUCTED ADJACENT TO BUILDING FOUNDATION PER DETAIL D/C-3
   C. EXPANSION JOINTS SHALL BE CONSTRUCTED ADJACENT TO UTILITY STRUCTURES AND FLOW THROUGH PLANTERS PER DETAIL E/C-3

VEHICULAR CONCRETE PAVEMENT SECTION (A / C-3)
SCALE: NTS

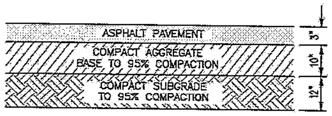

ASPHALT CONCRETE PAVEMENT SECTION (B / C-3)
SCALE: NTS

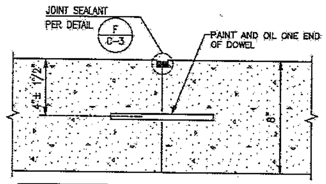

DIMENSIONS AND SPACING OF DOWEL BARS FOR 8" THICK SLAB		
DIA. (d) MIN.	LENGTH	SPACING
1"	16"	12"

VEHICULAR CONCRETE PAVEMENT-DOWELED LONGITUDINAL/ TRANSVERSE CONSTRUCTION JOINT (C / C-3)
SCALE: NTS

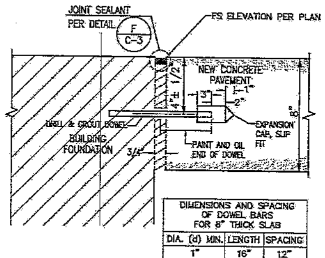

DIMENSIONS AND SPACING OF DOWEL BARS FOR 8" THICK SLAB		
DIA. (d) MIN.	LENGTH	SPACING
1"	16"	12"

VEHICULAR CONCRETE PAVEMENT-DOWELED EXPANSION JOINT AT BUILDING FOUNDATION (D / C-3)
SCALE: NTS

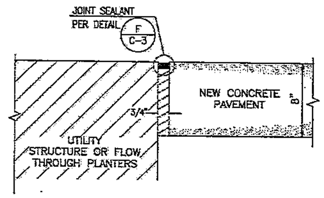

VEHICULAR CONCRETE PAVEMENT-EXPANSION JOINT AT UTILITY STRUCTURE OR FLOW THROUGH PLANTER (E / C-3)
SCALE: NTS

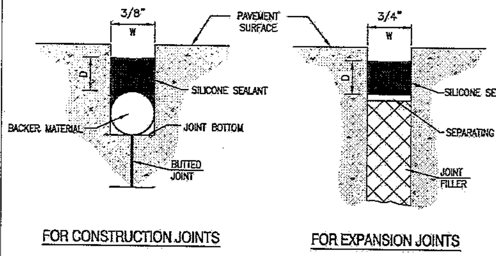

NOTES:

TOP OF SEALANT SHALL BE 1/8" (1/16" MIN., 1/4" MAX.) BELOW TOP OF PAVEMENT
D= DEPTH OF SEALANT 0.5 W FOR SILICONE SEALANT
DIAMETER OF BACKER MATERIAL = W + 1/8"

JOINT SEALANT (F / C-3)
SCALE: NTS

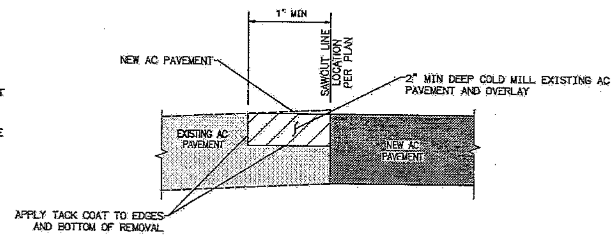

NOTES:

CONTRACTOR TO COLD MILL AS REQUIRED TO PROVIDE SMOOTH TRANSITION FROM EXISTING AC PAVEMENT TO PROPOSED CONCRETE PAVEMENT

SAWCUT / COLDMILL AT EXISTING AC PAVEMENT (G / C-3)
SCALE: NTS

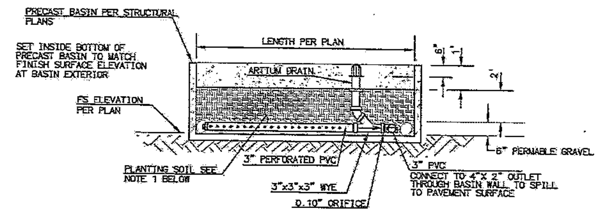

SOIL MEDIA REQUIREMENT NOTE:

1. SOIL MEDIA CONSISTS OF 85% WASHED COURSE SAND, 10% FINES (RANGE: 8-12%; 8% = 2 IN/HR INFILTRATION RATE, 12% = 1 IN/HR INFILTRATION RATE), AND 5% ORGANIC MATTER.
2. THE SAND PORTION SHOULD CONSIST OF CONCRETE SAND (PASSING A 1 1/4" SIEVE). MORTAR SAND (PASSING 1/8" SIEVE) IS ACCEPTABLE AS LONG AS IT IS THOROUGHLY WASHED TO REMOVE THE FINES.
3. FINES SHOULD PASS A #270 (SCREEN SIZE) SIEVE.
4. ORGANIC MATTER (MULCH OR BARK) IS CONSIDERED AN ADDITIVE TO ASSIST VEGETATION IN INITIAL ESTABLISHMENT AND CONTRIBUTES TO SORPTION OF POLLUTANTS BUT GENERALLY SHOULD BE MINIMIZED TO 5%.

MONITORING AND MAINTENANCE NOTE:

1. FLOW THROUGH PLANTERS SHALL BE INSPECTED, CLEANED-OUT, AND WHERE NECESSARY, REPAIRED, AT THE FOLLOWING MINIMUM FREQUENCIES: DURING EACH MONTH BETWEEN OCTOBER 15TH AND APRIL 15TH OF EACH YEAR AND AT LEAST TWICE DURING THE DRY SEASON BETWEEN APRIL 16 AND OCTOBER 14.
2. DEBRIS AND OTHER WATER POLLUTANTS REMOVED FROM FLOW THROUGH PLANTERS DURING CLEAN-OUT SHALL BE CONTAINED AND DISPOSED OF IN A PROPER MANNER.
3. ALL INSPECTION, MAINTENANCE AND CLEAN-OUT ACTIVITIES SHALL BE DOCUMENTED IN AN ANNUAL REPORT SUBMITTED TO THE EXECUTIVE DIRECTOR OF THE COASTAL COMMISSION NO LATER THAN JUNE 30TH OF EACH YEAR. THIS REPORT SHALL BE SUBMITTED FOR THE FIRST THREE YEARS FOLLOWING COMPLETION OF DEVELOPMENT.
4. IT IS THE APPLICANT'S RESPONSIBILITY TO MAINTAIN THE FLOW THROUGH PLANTERS ACCORDING TO SPECIFICATION.

FLOW THROUGH PLANTER (H / C-3)
SCALE: NTS

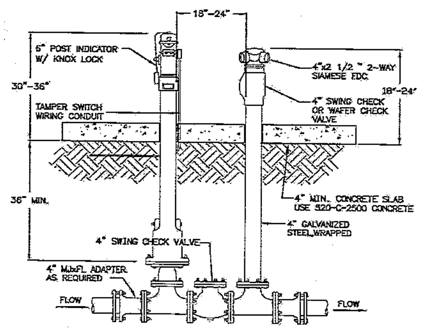

NOTES:

1. 3'X3' CONCRETE SPLASH PADS ARE REQUIRED AT FDC AND PIV
2. FDC AND PIV SHALL BE PAINTED RED.
3. GROUND POSTS ARE REQUIRED WHEN FDC AND/OR PIV LOCATED LESS THAN 4' FROM A CURB
4. THREADED OR BOLTED FLANGED FITTINGS ARE REQUIRED ON FIRE DEPARTMENT CONNECTIONS.
5. CONCRETE THRUST BLOCKING SHALL NOT COVER UNDERGROUND SWING CHECK VALVE INSPECTION
6. REFER TO SITE LAYOUT PLAN FOR PIPE SIZE AND MATERIAL.
7. THRUST BLOCK SHALL BE INSTALLED TO CITY OF SAN DIEGO SPECIFICATIONS.
8. CONCRETE THRUST BLOCKING SHALL NOT COVER UNDERGROUND SWING CHECK VALVE INSPECTION
9. ALL UNDERGROUND FITTINGS TO BE WRAPPED IN 10 MIL. PLASTIC.
10. ALL MATERIALS SHALL BE FM/UL LISTED, AND SHALL BE APPROVED BY THE FIRE MARSHALL PRIOR TO INSTALLATION.

POST INDICATOR VALVE AND FIRE DEPARTMENT CONNECTION (I / C-3)
SCALE: NTS

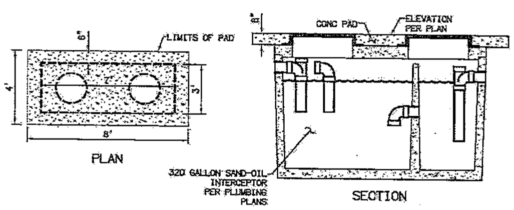

SAND-OIL INTERCEPTOR (J / C-3)
SCALE: NTS

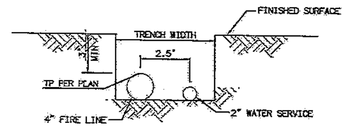

NOTES:

1. SEE SDRSD SDW-130 FOR PIPE BEDDING AND TRENCH BACKFILL.
2. GEOTECHNICAL NOTE: SAND BEARING CAPACITY

THE CONSTRUCTION OF THE FACILITIES WILL BE TAKING PLACE ON THE BEACH LOCATED SEAWARD OF THE MISSION BEACH BOARDWALK. AS SUCH, THE CONSTRUCTION ACTIVITIES REQUIRED FOR CONSTRUCTION WILL BE TAKING PLACE ON TOP OF FAIRLY CLEAN SANDS WHICH IN THE DRY HAVE POOR NEAR-SURFACE BEARING CAPACITY AND TRENCH EXCAVATION STABILITY DUE TO THE LACK OF FINE CONTENT WITHIN THE SOIL. THUS, CONSTRUCTION ACTIVITIES WILL NEED TO CONSIDER THE POTENTIAL DIFFICULTY OF USING CONSTRUCTION EQUIPMENT WITH STANDARD WHEELS AND THE POTENTIAL FOR CONTINUED DISTURBANCE OF NEAR-SURFACE SOILS. THE CONTRACTOR WILL NEED TO CONSIDER THE POTENTIAL BENEFITS OF USING LOW BEARING PRESSURE EQUIPMENT, PLANKING AND OTHER SURFACE PAVEMENT MATS. THE USE OF WATER AND/OR OTHER APPROVED SOIL STABILIZATION METHODS TO FACILITATE HIS OPERATIONS.

JOINT FIRE AND WATER SERVICE TRENCH (K / C-3)
SCALE: NTS

C-3

RBF CONSULTING
A Baker Company
9755 CLAIREMONT MESA BLVD.
SAN DIEGO, CA. 92124
858-614-5000

SPEC. NO. 8147

PLANS FOR THE CONSTRUCTION OF
South Mission Beach Lifeguard Station

Details | C-3

CITY OF SAN DIEGO, CALIFORNIA
ENGINEERING & CAPITAL PROJECTS
ARCHITECTURAL ENGINEERING & CONTRACTS DIVISION
SHEET 9 OF 94 SHEETS

WBS S-00791

APPROVED: FOR CITY ENGINEER 10/13/2014 DATE

SUBMITTED BY: JIHAD SLEIMAN PROJECT MANAGER

DESCRIPTION	BY	APPROVED	DATE	FILMED
ORIGINAL	WH/TT			

YOUSIF BENYAMIN PROJECT ENGINEER
218-1690 CCS27 COORDINATES
1858-6253 CCS83 COORDINATES

CONTRACTOR ______ DATE STARTED ______
INSPECTOR ______ DATE COMPLETED ______

32849- 9 -D

South Mission Beach Lifeguard Station
700 N. Jetty Road

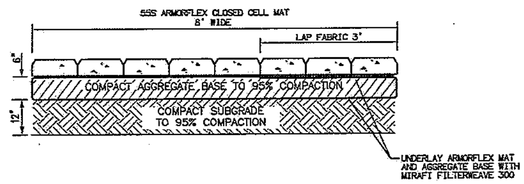

ARMORFLEX CONCRETE MATTRESS SECTION (A / C-4)
SCALE: NTS

NOTE:
1. FOR CONNECTION AT BUILDING FOUNDATION 12" WALL, SEE STRUCTURAL DETAIL 10/S1.4
2. FOR CONNECTION AT BUILDING FOUNDATION 8" WALL, SEE STRUCTURAL DETAIL 11/S1.4
3. FOR CONNECTION AT PLANTER WALL, SEE STRUCTURAL DETAIL 12/S2.1

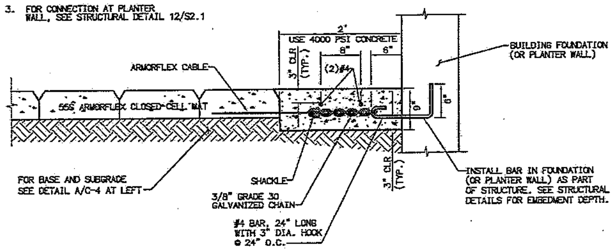

ARMORFLEX CONCRETE MATTRESS BUILDING FOUNDATION CONNECTION DETAIL (B / C-4)
SCALE: NTS

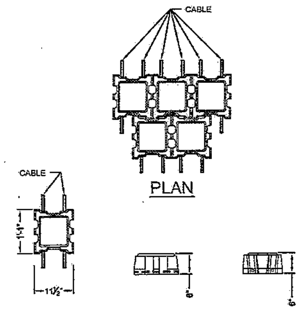

ARMORFLEX 55S BLOCK (C / C-4)
SCALE: NTS

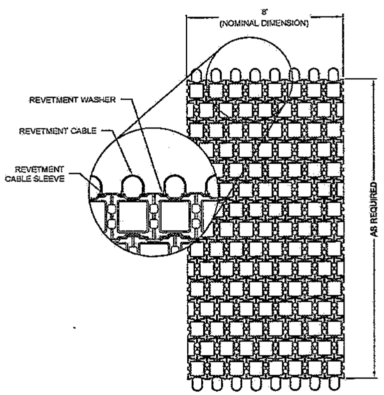

ARMORFLEX 55S MAT (D / C-4)
SCALE: NTS

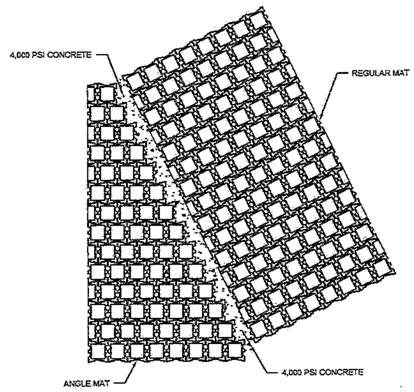

NOTE:
ANGLE MATS WILL BE CONSTRUCTED BY OMITTING THE REQUIRED UNITS SO THE REQUIRED MAT DIMENSIONS CAN BE OBTAINED.

ARMORFLEX 55S ANGLE MAT CONNECTION (E / C-4)
SCALE: NTS

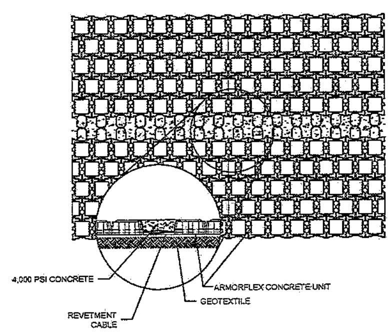

ARMORFLEX 55S MAT TO MAT CONNECTION (F / C-4)
SCALE: NTS

C-4

RBF CONSULTING
A [redacted] Company
9755 CLAIREMONT MESA BLVD.
SAN DIEGO, CA. 92124
858-614-5000

SPEC. NO. 8147

REGISTERED PROFESSIONAL ENGINEER — No. 45717, Exp. 12/31/14, CIVIL, STATE OF CALIFORNIA

PLANS FOR THE CONSTRUCTION OF
South Mission Beach Lifeguard Station

Details — C-4

CITY OF SAN DIEGO, CALIFORNIA
ENGINEERING & CAPITAL PROJECTS
ARCHITECTURAL ENGINEERING & CONTRACTS DIVISION
SHEET 10 OF 94 SHEETS

WBS S-00791

APPROVED: FOR CITY ENGINEER — DATE 10/13/2014

SUBMITTED BY: JIHAD SLEIMAN, PROJECT MANAGER

DESCRIPTION	BY	APPROVED	DATE	FILMED
ORIGINAL	WH/TT			

YOUSIF BENYAMIN, PROJECT ENGINEER
218-1693 CCS27 COORDINATES
1858-6253 CCS83 COORDINATES

CONTRACTOR ______ DATE STARTED ______
INSPECTOR ______ DATE COMPLETED ______

32849-10-D

South Mission Beach Lifeguard Station
700 N. Jetty Road

ADDENDUM "A"

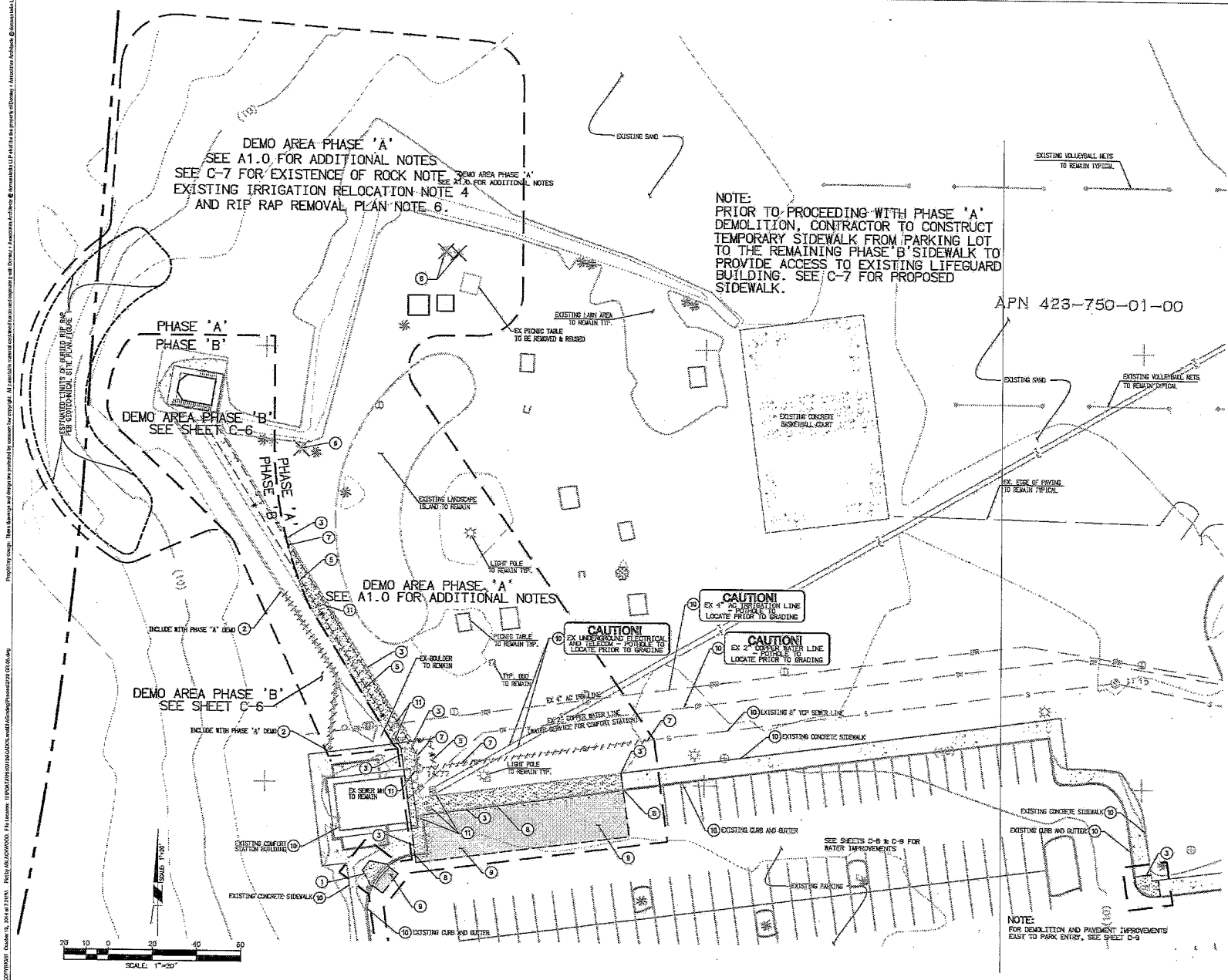

DEMOLITION LEGEND

- SAWCUT LINE
- DEMOLISH AC
- DEMOLISH CONC
- REMOVE EXISTING UTILITY OR STRUCTURE
- LIMIT OF WORK

CONSTRUCTION NOTES

1. SAWCUT AND REMOVE EXISTING PEDESTRIAN RAMP
2. REMOVE EXISTING K-RAIL
3. SAWCUT AND REMOVE EXISTING SIDEWALK PER SDR-156
5. REMOVE EXISTING 1" WATER LINE
6. REMOVE EXISTING TREE
7. REMOVE EXISTING SEWER LINE
8. SAWCUT AND REMOVE EXISTING CURB & GUTTER
9. SAWCUT AND REMOVE EXISTING AC PAVEMENT
10. PROTECT IN PLACE
11. ADJUST EXISTING UTILITY STRUCTURE TO GRADE

DISPOSAL NOTE

ALL REMOVED MATERIALS SHALL BE DISPOSED OF OFFSITE PER SPECIFICATION.

C-5

RBF CONSULTING
A Baker Company
9755 CLAIREMONT MESA BLVD.
SAN DIEGO, CA. 92124
858-614-5000

SPEC. NO. 8147

REGISTERED PROFESSIONAL ENGINEER
DANIEL L. RICE
No. 46212
Exp. 12/31/14
CIVIL
STATE OF CALIFORNIA

PLANS FOR THE CONSTRUCTION OF
South Mission Beach Lifeguard Station

Demolition Plan (Phase A) C-5

CITY OF SAN DIEGO, CALIFORNIA
ENGINEERING & CAPITAL PROJECTS
ARCHITECTURAL ENGINEERING & CONTRACTS DIVISION
SHEET 13 OF 34 SHEETS

WBS: S-00791

APPROVED: 10/13/2014 FOR CITY ENGINEER — DATE

SUBMITTED BY: JAVAD ESTEKHR PROJECT MANAGER

DESCRIPTION	BY	APPROVED	DATE	FILMED
ORIGINAL	MWH			

YOUSEF BENYAMIN PROJECT ENGINEER
619-1593
COSS2 COORDINATES
1858-6953
COSS3 COORDINATES

CONTRACTOR _____ DATE STARTED _____
INSPECTOR _____ DATE COMPLETED _____

32849-11-D

© COPYRIGHT October 15, 2014 of RBF/RBA Partnership, Inc. Drawing: I:\PROJECTS\32849\CADD\Plans\Arch\Demo\32849-D01-Demo.dwg
Property copyright. These drawings and designs are protected by common law copyright. All associated material contained therein and copyrighted by RBF/RBA Partnership, Inc. shall not be used, reproduced, or disclosed without the written consent of RBF/RBA Partnership, Inc.

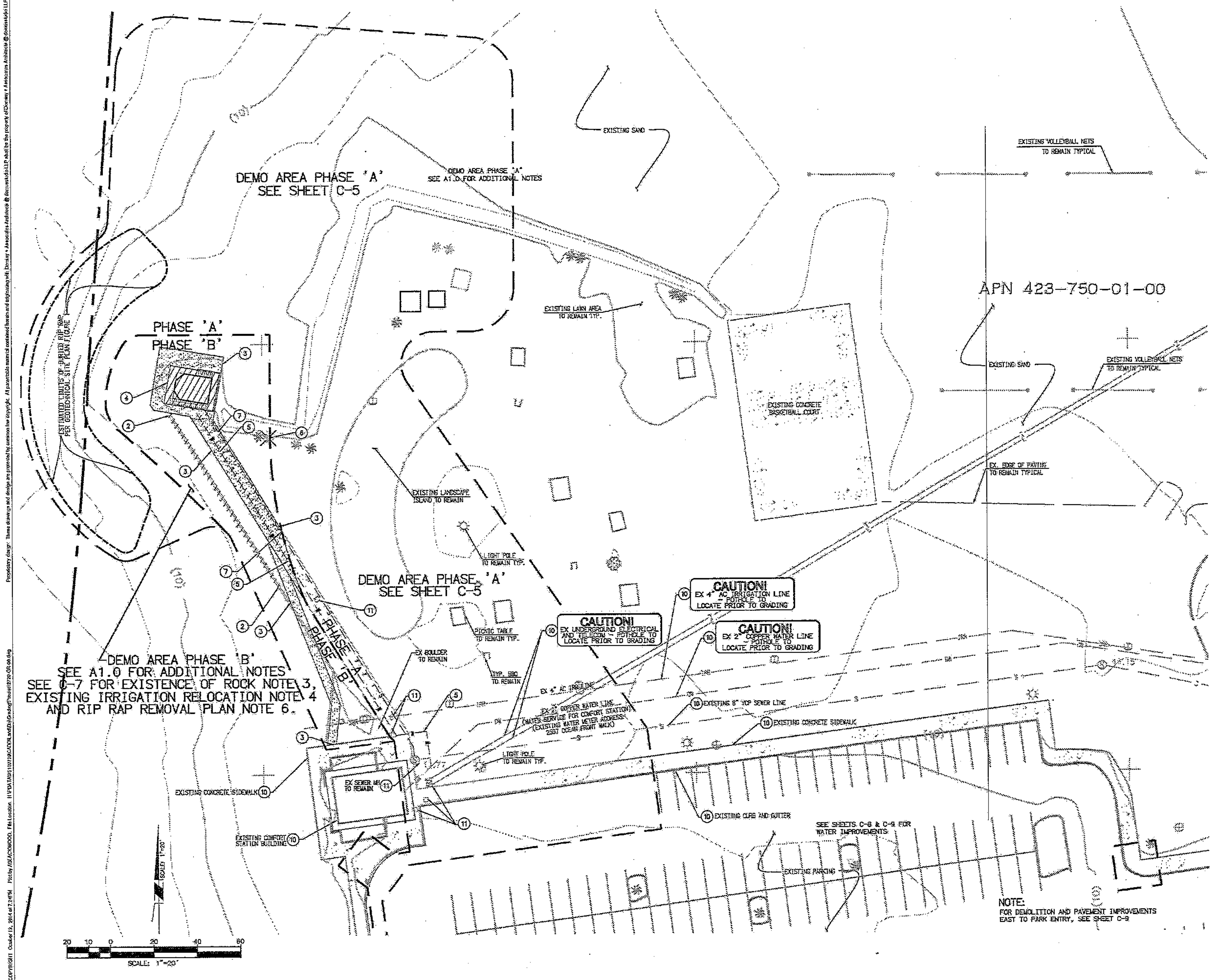

South Mission Beach Lifeguard Station
700 N. Jetty Road

DEMOLITION LEGEND

- SAWCUT LINE
- DEMOLISH AC
- DEMOLISH CONC
- REMOVE EXISTING UTILITY OR STRUCTURE
- LIMIT OF WORK

CONSTRUCTION NOTES

(2) REMOVE EXISTING K-RAIL
(3) SAWCUT AND REMOVE EXISTING SIDEWALK PER SDG-156
(4) DEMOLISH EXISTING LIFEGUARD TOWER, STORAGE AND ALL APPURTENANCES AFTER COMPLETION OF NEW STATION
(5) REMOVE EXISTING 1" WATER LINE
(6) REMOVE EXISTING TREE
(7) REMOVE EXISTING SEWER LINE
(10) PROTECT IN PLACE
(11) ADJUST EXISTING UTILITY STRUCTURE TO GRADE

DISPOSAL NOTE

ALL REMOVED MATERIALS SHALL BE DISPOSED OF OFFSITE PER SPECIFICATION.

C-6

RBF CONSULTING
A Baker Company
9755 CLAIREMONT MESA BLVD.
SAN DIEGO, CA. 92124
858-614-5000

SPEC. NO. 8147

PLANS FOR THE CONSTRUCTION OF
South Mission Beach Lifeguard Station

Demolition Plan (Phase B) — C-6

CITY OF SAN DIEGO, CALIFORNIA
ENGINEERING & CAPITAL PROJECTS
ARCHITECTURAL ENGINEERING & CONTRACTS DIVISION
SHEET 12 OF 94 SHEETS

FOR CITY ENGINEER — 10/13/2014 DATE

WBS S-00791

SUBMITTED BY: JIHAD SLEIMAN, PROJECT MANAGER
YOUSIF BENYAMIN, PROJECT ENGINEER
218-1693 CCS27 COORDINATES
1858-6253 CCS83 COORDINATES

DESCRIPTION	BY	APPROVED	DATE	FILMED
ORIGINAL	WH/TT			

CONTRACTOR ______ DATE STARTED ______
INSPECTOR ______ DATE COMPLETED ______

32849-12-D

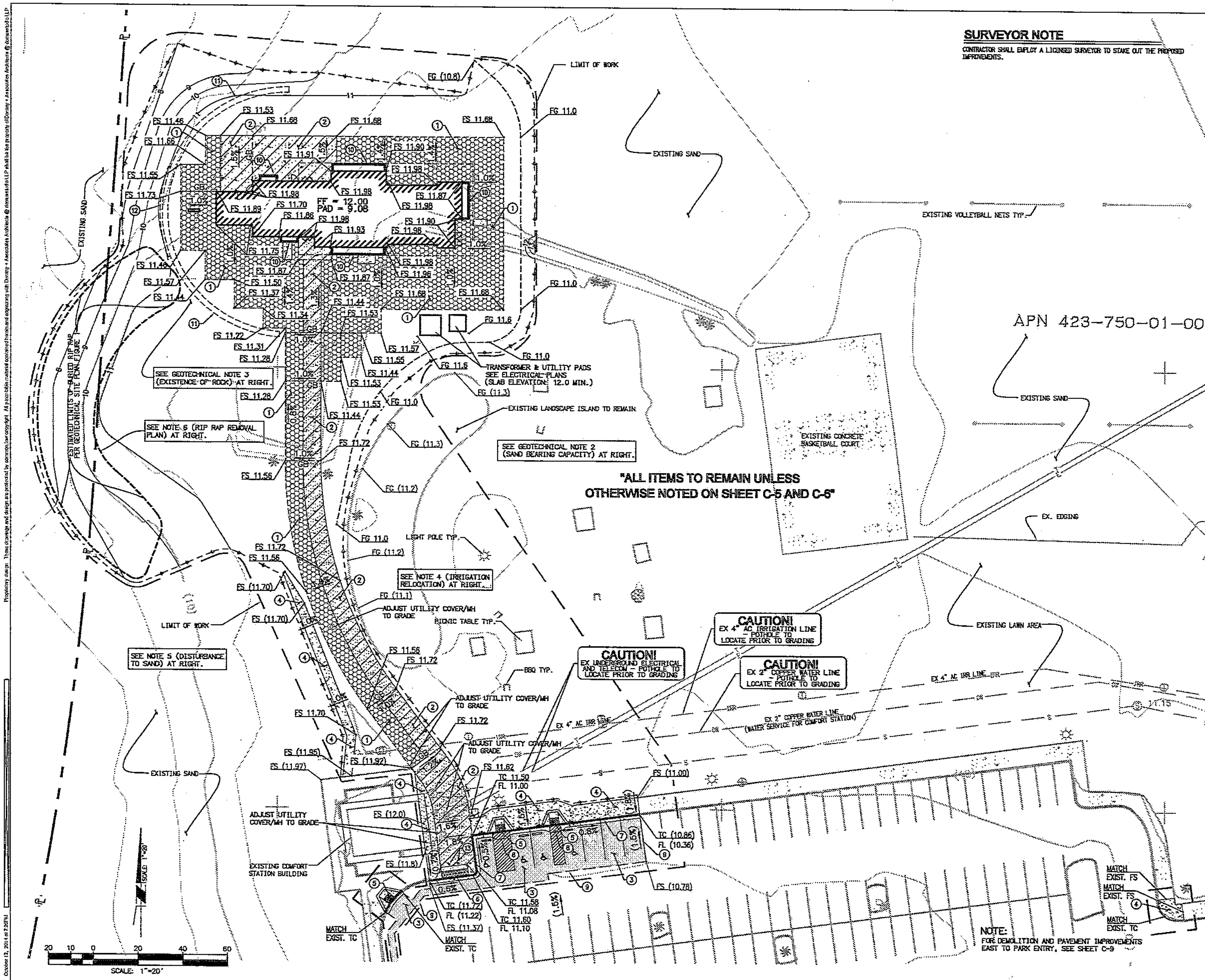

SURVEYOR NOTE

CONTRACTOR SHALL EMPLOY A LICENSED SURVEYOR TO STAKE OUT THE PROPOSED IMPROVEMENTS.

CONSTRUCTION NOTES

1. CONSTRUCT CONCRETE EROSION CONTROL MAT ARMORFLEX CLASS 555 OR EQUAL PER DETAILS A/C-4 THRU F/C-4
2. CONSTRUCT VEHICULAR CONCRETE PAVEMENT PER DETAIL A/C-3
3. CONSTRUCT ASPHALT CONCRETE PAVEMENT PER DETAIL B/C-3
4. CONSTRUCT CONCRETE SIDEWALK PER SDG-109, SDG-155 AND G-10
5. CONSTRUCT TYPE B PEDESTRIAN RAMP PER SDG-132
6. CONSTRUCT 12" CONCRETE DRIVEWAY PER SDG-159
7. CONSTRUCT 6" CURB AND GUTTER PER SDG-151
8. CONSTRUCT MODIFIED GUTTER 3' WIDE
9. SAWCUT/ COLDMILL AT EXISTING AC PAVEMENT PER DETAIL G/C-3
10. INSTALL FLOW THROUGH PLANTER PER DETAIL H/C-3
11. BELOW GRADE EROSION BARRIER PER STRUCTURAL PLANS
12. CONCRETE CAP PER STRUCTURAL PLANS
13. INSTALL DEMOUNTABLE POST PER M-16

NOTES

1. AREA TO BE GRADED: 44,850 SF (1.03 ACRE)
   FILL QUANTITY: 1,200 CY
   CUT QUANTITY: 1,200 CY

2. GEOTECHNICAL NOTE: SAND BEARING CAPACITY
   THE CONSTRUCTION OF THE FACILITIES WILL BE TAKING PLACE ON THE BEACH LOCATED SEAWARD OF THE MISSION BEACH BOARDWALK. AS SUCH, THE CONSTRUCTION ACTIVITIES REQUIRED FOR CONSTRUCTION WILL BE TAKING PLACE ON TOP OF FAIRLY CLEAN SANDS WHICH IN THE DRY HAVE POOR NEAR-SURFACE BEARING CAPACITY AND TRENCH EXCAVATION STABILITY DUE TO THE LACK OF FINE CONTENT WITHIN THE SOIL. THUS, CONSTRUCTION ACTIVITIES WILL NEED TO CONSIDER THE POTENTIAL DIFFICULTY OF USING CONSTRUCTION EQUIPMENT WITH STANDARD WHEELS AND THE POTENTIAL FOR CONTINUED DISTURBANCE OF NEAR-SURFACE SOILS. THE CONTRACTOR WILL NEED TO CONSIDER THE POTENTIAL BENEFITS OF USING LOW BEARING PRESSURE EQUIPMENT, PLANKING AND OTHER SURFACE PAVEMENT MATS, THE USE OF WATER AND/OR OTHER APPROVED SOIL STABILIZATION METHODS TO FACILITATE HIS OPERATIONS.

3. GEOTECHNICAL NOTE: EXISTENCE OF ROCK
   IT SHOULD BE NOTED THAT ANY OF THE INSTALLATION TECHNIQUES DESCRIBED IN NOTE 2 WILL MEET REFUSAL ON ANY RIP RAP OR DEBRIS LEFT IN PLACE. THE CONTRACTOR SHOULD BE AWARE OF THE POSSIBLE PRESENCE OF EXISTING RIP RAP AND DEBRIS EXTENDING TO AN UNDETERMINED DEPTH ALONG THE SHEET-PILE ALIGNMENT, WHICH WILL REQUIRE REMOVAL PRIOR TO SHEET-PILE INSTALLATION.

   CONTRACTOR SHALL PERFORM PRE-EXCAVATION OF 10 FEET AT SHEET-PILE WALL ALIGNMENT TO LOCATE AND REMOVE RIP RAP. FOR BIDDING, CONTRACTOR SHALL ASSUME 200 TONS OF RIP RAP REQUIRING REMOVAL.

4. EXISTING IRRIGATION RELOCATION:
   A PORTION OF THE EXISTING PARK IRRIGATION SYSTEM FALLS WITHIN THE LIMITS OF THE NEW PAVEMENT. CONTRACTOR SHALL MODIFY THE EXISTING SYSTEM BY RELOCATING SPRINKLER HEADS AND PIPING TO THE NEW LANDSCAPE LIMITS EAST OF THE PROPOSED EDGE OF PAVEMENT.

5. DURING CONSTRUCTION, DISTURBANCE TO SAND AND INTERTIDAL AREAS SHALL BE MINIMIZED TO THE MAXIMUM EXTENT FEASIBLE. ALL EXCAVATED BEACH SAND SHALL BE RE-DEPOSITED ON THE BEACH. LOCAL SAND, COBBLES OR SHORELINE ROCKS SHALL NOT BE USED FOR BACKFILL OR FOR ANY OTHER PURPOSE AS CONSTRUCTION MATERIAL.

6. CONTRACTOR SHALL SUBMIT FOR REVIEW AND AND WRITTEN APPROVAL OF THE EXECUTIVE DIRECTOR OF THE COASTAL COMMISSION A PLAN FOR REMOVAL OF RIP RAP FROM THE BEACH SEAWARD OF THE EXISTING LIFEGUARD STATION (TO BE DEMOLISHED). PLAN SHALL INCLUDE THE FOLLOWING:

   A. REMOVAL FROM THE BEACH OF ALL VISIBLE AND EXTRACTABLE RIP RAP SEAWARD OF THE EXISTING LIFEGUARD STATION WITHIN THE ESTIMATED RIP RAP LIMITS SHOWN. CRITERIA FOR REMOVAL SHALL BE ALL ROCK WITHIN 3 FEET OF THE SURFACE SAND LAYER.

   B. METHOD OF REMOVAL.

   C. SCHEDULE FOR REMOVAL, WITH THE FIRST EXTRACTION TO OCCUR WITHIN 1 YEAR OF ISSUANCE OF THE COASTAL DEVELOPMENT PERMIT. REMOVAL SHALL NOT OCCUR BETWEEN MEMORIAL DAY WEEKEND AND LABOR DAY.

   D. LOCATION OF THE EXPORT SITE. IF WITHIN THE COASTAL ZONE, A SEPARATE COASTAL DEVELOPMENT PERMIT OR PERMIT AMENDMENT MAY BE REQUIRED.

SEE SHEET C-1 FOR LEGEND

C-7

RBF CONSULTING
A Baker Company
9755 CLAIREMONT MESA BLVD.
SAN DIEGO, CA. 92124
858-614-5000

SPEC. NO. 8147

PLANS FOR THE CONSTRUCTION OF
South Mission Beach Lifeguard Station

Grading and Drainage Plan | C-7

CITY OF SAN DIEGO, CALIFORNIA
ENGINEERING & CAPITAL PROJECTS
ARCHITECTURAL ENGINEERING & CONTRACTS DIVISION
SHEET 13 OF 94 SHEETS

WBS S-00791

FOR CITY ENGINEER — DATE 10/13/2014

SUBMITTED BY: JIHAD SLEIMAN, PROJECT MANAGER

DESCRIPTION	BY	APPROVED	DATE	FILMED
ORIGINAL	WH/TT			

YOUSIF BENYAMIN
PROJECT ENGINEER
218-1693
CCS27 COORDINATES
1858-6253
CCS83 COORDINATES

CONTRACTOR ____ DATE STARTED ____
INSPECTOR ____ DATE COMPLETED ____

32849-13-D

South Mission Beach Lifeguard Station
700 N. Jetty Road

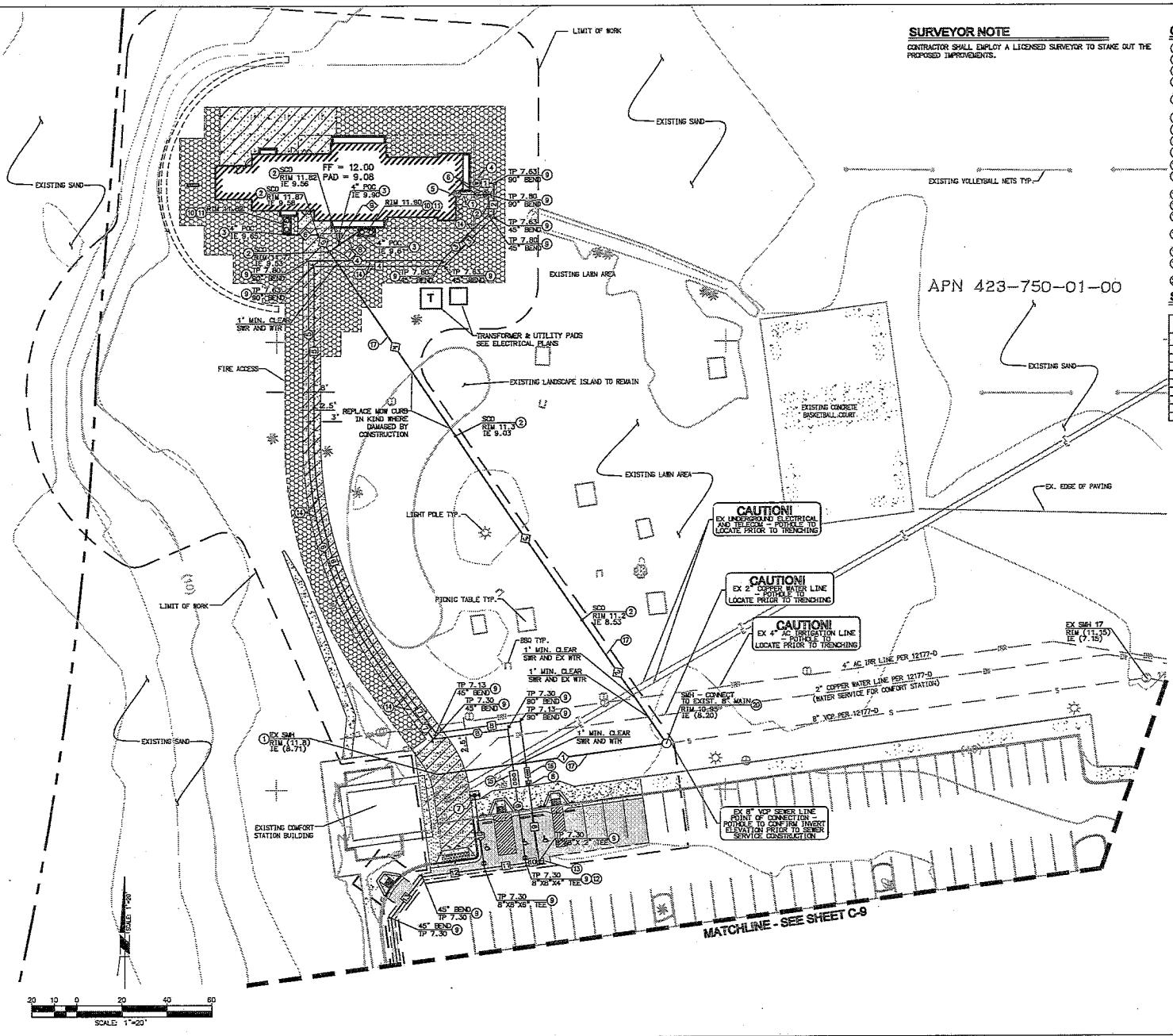

SURVEYOR NOTE

CONTRACTOR SHALL EMPLOY A LICENSED SURVEYOR TO STAKE OUT THE PROPOSED IMPROVEMENTS.

CONSTRUCTION NOTES

1. CONNECT TO EXISTING SEWER MANHOLE PER SDS-108
2. CONSTRUCT SEWER CLEANOUT PER SC-01
3. SEWER POC - SEE PLUMBING PLANS FOR CONTINUATION.
4. 2" DOMESTIC WATER POC - SEE PLUMBING PLANS FOR CONTINUATION.
5. 4" FIRE SERVICE POC - SEE PLUMBING PLANS FOR CONTINUATION.
6. INSTALL FDC AND PIV PER DETAIL I/C-3
7. CONSTRUCT FIRE HYDRANT PER SDW-104
8. INSTALL 1.5" WATER METER IN WATER METER BOX PER SDW-113
9. CONSTRUCT THRUST BLOCK PER SDW-151
10. INSTALL 320 GALLON SAND-OIL INTERCEPTOR PER PLUMBING PLANS
11. INSTALL 8" CONCRETE PAD OVER SEPARATOR PER DETAIL J/C-3
12. INSTALL 4" FIRE SERVICE CONNECTION PER SDW-118
13. CAP NEW WATER LINE
14. INSTALL WATER LINE PER DETAIL K/C-3 AND SDW-110 RESURFACE AC PAVEMENT PER SDB-107
15. INSTALL 4" FIRE SERVICE BACKFLOW PREVENTOR WITH STAINLESS ENCLOSURE PER SDW-105
16. INSTALL 2" BACKFLOW PREVENTOR WITH STAINLESS ENCLOSURE PER SDW-155
17. INSTALL SEWER LATERAL, PIPE BEDDING AND TRENCH BACKFILL PER SDS-110
20. CONSTRUCT SEWER MANHOLE PER SDS-107

SEE SHEET C-1 FOR LEGEND

SEWER LATERAL TABLE (SDR-35)

NO	BEARING/DELTA	RADIUS	LENGTH	SLOPE	NOTE
1	N 82°24'53" E	—	102.77'	0.5%	4" PVC
2	N 34°18'27" W	—	68.78'	0.5%	4" PVC
3	N 34°18'27" W	—	100.00'	0.5%	4" PVC
4	N 34°18'27" W	—	100.00'	0.5%	4" PVC
5	N 34°18'27" W	—	9.12'	0.5%	4" PVC
6	N 00°00'00" E	—	13.80'	0.5%	4" PVC
7	N 55°41'33" E	—	5.52'	0.5%	4" PVC
8	N 55°41'33" E	—	9.76'	0.5%	4" PVC
9	N 00°00'00" E	—	5.00'	6.5%	4" PVC

WATER DATA TABLE

NO	BEARING/DELTA	RADIUS	LENGTH	NOTE
1	N 90°00'00" E	—	7.64'	2" PVC SCH-80
2	N 00°00'00" E	—	15.09'	2" PVC SCH-80
3	N 45°00'00" E	—	31.07'	2" PVC SCH-80
4	N 90°00'00" E	—	58.03'	2" PVC SCH-80
5	N 00°00'00" E	—	76.61'	2" PVC SCH-80
6	36°18'50"	177.00'	112.18'	2" PVC SCH-80
7	N 36°18'50" W	—	34.04'	2" PVC SCH-80
8	N 82°18'34" E	—	37.92'	2" PVC SCH-80
9	N 07°41'26" W	—	62.90'	2" PVC SCH-80
10	N 82°18'34" E	—	6.00'	8" PVC DR-18
11	N 82°18'34" E	—	18.50'	8" PVC DR-18
12	N 82°18'34" E	—	27.83'	8" PVC DR-18
13	N 37°23'07" E	—	23.08'	8" PVC DR-18

FIRE DATA TABLE

NO	BEARING/DELTA	RADIUS	LENGTH	NOTE
1	N 90°00'00" E	—	13.64'	4" PVC DR-18
2	N 00°00'00" E	—	9.13'	4" PVC DR-18
3	N 45°00'00" E	—	28.00'	4" PVC DR-18
4	N 90°00'00" E	—	59.50'	4" PVC DR-18
5	N 00°00'00" E	—	79.11'	4" PVC DR-18
6	36°18'50"	179.50'	113.77'	4" PVC DR-18
7	N 36°18'50" W	—	35.53'	4" PVC DR-18
8	N 82°18'34" E	—	33.41'	4" PVC DR-18
9	N 07°41'26" W	—	60.40'	4" PVC DR-18
10	N 07°41'26" W	—	33.00'	6" PVC DR-18

C-8

RBF CONSULTING
A Ellison Company
9755 CLAIREMONT MESA BLVD.
SAN DIEGO, CA. 92124
858-614-5000

SPEC. No. 8147

PLANS FOR THE CONSTRUCTION OF

South Mission Beach Lifeguard Station

Utility Plan C-8

CITY OF SAN DIEGO, CALIFORNIA
ENGINEERING & CAPITAL PROJECTS
ARCHITECTURAL, ENGINEERING & CONTRACTS DIVISION
SHEET 14 OF 94 SHEETS

WBS S-00791

APPROVED _____ 10/13/2014
PER CITY ENGINEER DATE

SUBMITTED BY:
JOAD SLEIMAN
PROJECT MANAGER

DESCRIPTION	BY	APPROVED	DATE	FILMED
ORIGINAL	WHITT			

YOUSIF BENYAMIN
PROJECT ENGINEER
619-1803
DEPT COORDINATES
1856-6253
COSD COORDINATES

CONTRACTOR _____ DATE STARTED _____
INSPECTOR _____ DATE COMPLETED _____

32849-14-D

© COPYRIGHT

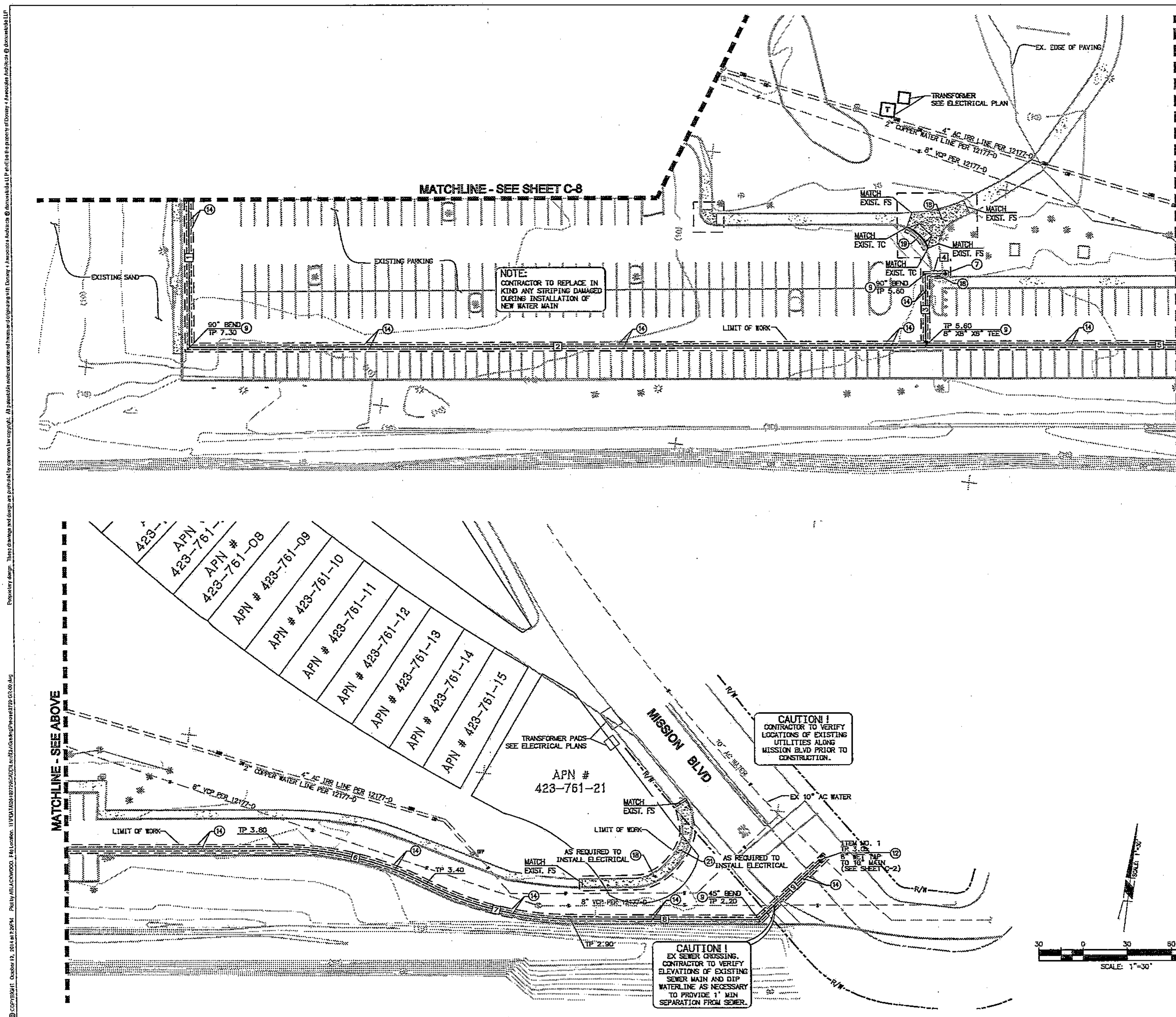

CONSTRUCTION NOTES

(7) CONSTRUCT FIRE HYDRANT PER SDW-104
(8) CONSTRUCT THRUST BLOCK PER SDW-151
(12) INSTALL 8" FIRE SERVICE CONNECTION PER SDW-118
(13) CAP NEW WATER LINE
(14) INSTALL WATER MAIN PER SDW-110
RESURFACE AC PAVEMENT PER SDG-107
(18) SAWCUT AND REMOVE EXIST CONCRETE SIDEWALK PER SDG-156
CONSTRUCT NEW CONCRETE SIDEWALK PER SDG-109, SDG-155 AND G-10
(19) SAWCUT AND REMOVE EXIST. DRIVEWAY
CONSTRUCT NEW 12" CONCRETE DRIVEWAY PER SDG-159
(21) RECORD EXISTING CURB RAMP ELEVATIONS AND HORIZONTAL LOCATION. SAWCUT AND REMOVE EXIST. CURB RAMP.
CONSTRUCT NEW CURB RAMP - TYPE C1 PER SDG-134 TO MATCH EXISTING RAMP THAT WAS REMOVED.

WATER DATA TABLE

	NO	BEARING/DELTA	RADIUS	LENGTH	DESCRIPTION
	1	N 07°30'31" W	—	121.43'	8" PVC DR-18
	2	N 82°20'50" E	—	496.30'	8" PVC DR-18
	3	N 07°39'10" W		48.72'	6" PVC DR-18
	4	N 82°20'50" E		13.83'	6" PVC DR-18
*	5	N 82°20'50" E	—	314.43'	8" PVC DR-18
*	6	27°53'32"	210.00'	102.23'	8" PVC DR-14
*	7	27°31'06"	210.00'	100.86'	8" PVC DR-14
*	8	N 82°43'16" E	—	127.35'	8" PVC DR-18
*	9	N 38°33'32" E	—	60.61'	8" PVC DR-18

* GROUNDWATER NOTE:
CONTRACTOR MAY ENCOUNTER GROUNDWATER DURING TRENCH EXCAVATION FOR THIS SEGMENT OF THE WATER MAIN. CONTRACTOR SHALL FILTER FABRIC WRAP THE 6" THICK SECTION OF PIPE BEDDING MATERIAL TO STABILIZE THE BOTTOM OF TRENCH PRIOR TO INSTALLATION OF THE PIPE. SEE GEOTECHNICAL GROUNDWATER NOTE BELOW FOR ADDITIONAL INFORMATION.

NOTES

1. GEOTECHNICAL NOTE: GROUNDWATER
DEPENDING UPON THE DEPTH OF EXCAVATION, THE CONTRACTOR MAY ENCOUNTER GROUNDWATER. GROUNDWATER LEVELS ARE RELATED TO OCEAN TIDES. CONTRACTOR SHOULD HAVE TIDE TABLES AVAILABLE TO HELP ASSESS THE LIKELIHOOD OF ENCOUNTERING GROUNDWATER. CONTRACTOR SHOULD NOTE THAT 6 PLUS HOURS AFTER A TIDAL HIGH, THE GROUNDWATER WILL BE AT ITS LOWEST LEVEL FACILITATING UTILITY/ EXCAVATION WORK. CONTRACTOR MAY NEED TO STABILIZE BOTTOM OF EXCAVATIONS DUE TO HIGH GROUNDWATER. ONE METHOD OF STABILIZATION INCLUDES THE USE OF FILTER FABRIC WRAPPED PIPE BEDDING MATERIAL OR 3/4 INCH GRAVEL.

DISPOSAL NOTE

ALL REMOVED MATERIALS SHALL BE DISPOSED OF OFFSITE PER SPECIFICATION.

SURVEYOR NOTE

CONTRACTOR SHALL EMPLOY A LICENSED SURVEYOR TO STAKE OUT THE PROPOSED IMPROVEMENTS.

TRAFFIC CONTROL NOTE

CONTRACTOR SHALL OBTAIN A TRAFFIC CONTROL PERMIT FOR WORK IN MISSION BOULEVARD AND PARKING LOT.

SEE SHEET C-1 FOR LEGEND

C-9

RBF CONSULTING
A [redacted] Company
9755 CLAIREMONT MESA BLVD.
SAN DIEGO, CA. 92124
858-614-5000

SPEC. NO. 5147

PLANS FOR THE CONSTRUCTION OF
South Mission Beach Lifeguard Station

Utility Plan | C-9

CITY OF SAN DIEGO, CALIFORNIA
ENGINEERING & CAPITAL PROJECTS
ARCHITECTURAL ENGINEERING & CONTRACTS DIVISION
SHEET 15 OF 94 SHEETS

WBS S-00791

APPROVED: FOR CITY ENGINEER — DATE 10/13/2014

SUBMITTED BY: JIHAD SLEIMAN, PROJECT MANAGER

DESCRIPTION	BY	APPROVED	DATE	FILMED
ORIGINAL	WH/TT			

YOUSIF BENYAMIN, PROJECT ENGINEER
218-1883 CCS27 COORDINATES
1858-6253 CCS83 COORDINATES

CONTRACTOR ____ DATE STARTED ____
INSPECTOR ____ DATE COMPLETED ____

32849-15-D

South Mission Beach Lifeguard Station
700 N. Jetty Road

BMP REQUIREMENTS

1. NO CONSTRUCTION MATERIALS, DEBRIS, OR WASTE SHALL BE PLACED OR STORED IN A MANNER WHERE IT MAY BE SUBJECT TO WAVE, WIND, RAIN OR TIDAL EROSION AND DISPERSION.

2. ANY AND ALL REFUSE AND DEBRIS RESULTING FROM CONSTRUCTION AND DEMOLITION ACTIVITIES SHALL BE REMOVED FROM THE PROJECT SITE WITHIN 72 HOURS OF COMPLETION OF DEMOLITION AND CONSTRUCTION. CONSTRUCTION AND DEMOLITION DEBRIS AND SEDIMENT SHALL BE REMOVED FROM OR CONTAINED AND SECURED WITHIN WORK AREAS EACH DAY THAT CONSTRUCTION OR DEMOLITION OCCURS TO PREVENT THE ACCUMULATION OF SEDIMENT AND OTHER DEBRIS THAT COULD BE DISCHARGED INTO COASTAL WATERS. ALL DEMOLITION DEBRIS, CONSTRUCTION DEBRIS AND OTHER WASTE MATERIALS REMOVED FROM THE PROJECT SITE SHALL BE DISPOSED OF OR RECYCLED IN COMPLIANCE WITH LOCAL, STATE AND FEDERAL REGULATIONS. NO DEBRIS OR OTHER WASTE MATERIALS SHALL BE PLACED IN COASTAL WATERS OR BE ALLOWED TO MOVE INTO COASTAL WATERS. IF A DISPOSAL SITE IS LOCATED IN THE COASTAL ZONE, A COASTAL DEVELOPMENT PERMIT OR AN AMENDMENT TO THE PROJECT COASTAL DEVELOPMENT SHALL BE REQUIRED BEFORE DISPOSAL CAN TAKE PLACE.

3. EROSION AND SEDIMENT BEST MANAGEMENT PRACTICES (BMP'S) SHALL BE USED TO CONTROL DUST AND SEDIMENTATION IMPACTS TO COASTAL WATERS DURING CONSTRUCTION AND DEMOLITION ACTIVITIES. BMP'S SHALL INCLUDE, BUT ARE NOT LIMITED TO PLACEMENT OF GRAVEL BAGS AROUND DRAINAGE INLETS TO PREVENT SEDIMENT TRANSPORT INTO THE STORM DRAIN SYSTEM AND PACIFIC OCEAN.

4. ALL CONSTRUCTION MATERIALS, EXCLUDING LUMBER, SHALL BE COVERED AND ENCLOSED ON ALL SIDES AND KEPT AS FAR AWAY FROM A STORM DRAIN INLET AND RECEIVING WATERS AS POSSIBLE.

5. DEVELOP AND IMPLEMENT SPILL PREVENTION AND CONTROL MEASURES AND ENSURE THE PROPER HANDLING, STORAGE AND APPLICATION OF PETROLEUM PRODUCTS AND OTHER CONSTRUCTION MATERIALS. THESE SHALL INCLUDE A DESIGNATED FUELING AND VEHICLE MAINTENANCE AREA WITH APPROPRIATE BERMS AND PROTECTION TO PREVENT ANY SPILLAGE OF GASOLINE OR RELATED PETROLEUM PRODUCTS OR CONTACT WITH RUNOFF. THE FUELING AND MAINTENANCE AREA SHALL BE LOCATED AS FAR AWAY FROM THE RECEIVING WATERS AND STORM DRAIN INLETS AS POSSIBLE AND SHALL NOT BE LOCATED ON THE BEACH IF AT ALL POSSIBLE. IF FUELING OR MAINTENANCE IS PROPOSED TO BE ON THE BEACH THEN THE CONTRACTOR AND APPLICANT SHALL SUBMIT A PLAN TO THE EXECUTIVE DIRECTOR OF THE COASTAL COMMISSION SHOWING HOW THERE IS ESSENTIALLY NO POSSIBILITY OF CONTAMINATING BEACH MATERIALS THROUGH THOSE OPERATIONS.

6. MAINTAIN AND WASH EQUIPMENT AND MACHINERY IN CONFINED AREAS SPECIFICALLY DESIGNED TO CONTROL RUNOFF. THINNERS OR SOLVENTS SHALL NOT BE DISCHARGED INTO SANITARY OR STORM DRAIN SYSTEMS. WASHOUT FROM CONCRETE TRUCKS SHALL BE DISPOSED OF AT A CONTROLLED LOCATION NOT SUBJECT TO RUNOFF INTO COASTAL WATERS AND MORE THAN FIFTY FEET AWAY FROM A STORM DRAIN, OPEN DITCH OR SURFACE WATERS.

7. PROVIDE AND MAINTAIN ADEQUATE DISPOSAL FACILITIES FOR SOLID WASTE INCLUDING EXCESS CONCRETE PRODUCED DURING CONSTRUCTION.

8. PROVIDE AND MAINTAIN TEMPORARY SEDIMENT BASINS (INCLUDING DEBRIS BASINS, DESILTING BASINS OR SILT TRAPS), TEMPORARY DRAINS AND SWALES, GRAVEL BAG BARRIERS, WIND BARRIERS SUCH AS SOLID BOARD FENCE OR HAY BALES AND SILT FENCING.

9. STABILIZE ANY STOCKPILED FILL WITH GEOFABRIC COVERS OR OTHER APPROPRIATE COVER AND CLOSE AND STABILIZE OPEN TRENCHES AS SOON AS POSSIBLE.

10. PRIOR TO FINAL INSPECTION OF THE PROPOSED PROJECT, THE CONTRACTOR SHALL ENSURE THAT NO GASOLINE, LUBRICANT OR OTHER PETROLEUM-BASED PRODUCT WAS DEPOSITED ON THE BEACH OR AT ANY BEACH FACILITY. IF SUCH RESIDUES ARE DISCOVERED, THE RESIDUES AND ALL CONTAMINATED SAND SHALL BE REPORTED TO THE EXECUTIVE DIRECTOR OF THE COASTAL COMMISSION IN ORDER TO DETERMINE IF THE REMOVAL AND DISPOSAL OF THE CONTAMINATED MATTER SHALL REQUIRE A PERMIT AMENDMENT PURSUANT TO THE REQUIREMENTS OF THE COASTAL ACT AND THE CALIFORNIA CODE OF REGULATIONS.

WPCP NOTES

1. DISCHARGING SEDIMENT-LADEN WATER WHICH WILL CAUSE OR CONTRIBUTE TO AN EXCEEDANCE OF THE APPLICABLE RWQCB'S BASIN PLANS FROM A DEWATERING SITE OR SEDIMENT BASIN/TRAP INTO ANY RECEIVING WATER OR STORM DRAIN WITHOUT FILTRATION OR EQUIVALENT TREATMENT IS PROHIBITED.

2. THE DISCHARGER SHALL AMEND THE WPCP WHENEVER THERE IS A CHANGE IN CONSTRUCTION OR OPERATIONS, WHICH MAY AFFECT THE DISCHARGE OF POLLUTANTS TO SURFACE WATERS, GROUNDWATER, OR A MUNICIPAL STORM DRAIN SYSTEM. THE WPCP SHALL ALSO BE AMENDED IF THE DISCHARGER VIOLATES ANY CONDITION OF THE GENERAL PERMIT OR HAS NOT ACHIEVED THE GENERAL OBJECTIVE OF REDUCING OR ELIMINATING POLLUTANTS IN STORM WATER DISCHARGES. ALL AMENDMENTS SHOULD BE DATED AND DIRECTLY ATTACHED TO THE WPCP.

3. TEMPORARY ON-SITE DRAINAGE TO CARRY CONCENTRATED FLOW SHALL BE SELECTED TO COMPLY WITH CITY REQUIREMENTS TO CONTROL EROSION, TO RETURN FLOWS TO THEIR NATURAL DRAINAGE COURSES, AND TO PREVENT DAMAGE TO DOWNSTREAM PROPERTIES.

4. DISCHARGES ORIGINATING OFF-SITE, WHICH FLOW ACROSS OR THROUGH AREAS DISTURBED BY CONSTRUCTION THAT MAY CONTAIN POLLUTANTS, SHOULD BE REPORTED TO THE RWQCB.

5. SEDIMENT CONTROL BMP'S ARE REQUIRED AT APPROPRIATE LOCATIONS ALONG THE SITE PERIMETER AND AT ALL OPERATIONAL INTERNAL INLETS TO THE STORM DRAIN SYSTEM AT ALL TIMES.

6. THE CONTRACTOR IS RESPONSIBLE FOR ENSURING THAT ADEQUATE SEDIMENT CONTROL MATERIALS ARE AVAILABLE TO CONTROL SEDIMENT DISCHARGES AT THE DOWNGRADE PERIMETER AND OPERATIONAL INLETS (WEATHER AND STORM PREDICTIONS CAN BE OBTAINED BY CALLING THE NATIONAL WEATHER SERVICE AT (858) 675-8700 OR BY VISITING THE NATIONAL WEATHER SERVICE WEB SITE AT HTTP://WWW.WRH.NOAA.GOV/SANDIEGO/INDEX.SHTML FOR WEATHER INFORMATION AND CURRENT SATALITE/RADAR FEEDS).

7. THE OUTLETS OF ALL SEDIMENT BASINS, TRAPS, AND LOCATIONS OF ARTIFICIALLY CONCENTRATED FLOW SHALL BE PROVIDED WITH OUTLET PROTECTION TO PREVENT EROSION AND SCOUR.

8. INSPECTIONS SHALL BE PERFORMED BEFORE AND AFTER STORM EVENTS AND ONCE EACH 24-HOUR PERIOD DURING EXTENDED STORM EVENTS TO IDENTIFY BMP EFFECTIVENESS AND IMPLEMENT REPAIRS OR DESIGN CHANGES AS SOON AS FEASIBLE, DEPENDING ON FIELD CONDITIONS. EQUIPMENT, MATERIALS, AND WORKERS MUST BE AVAILABLE FOR RAPID RESPONSE TO FAILURES AND EMERGENCIES. ALL CORRECTIVE MAINTENANCE TO BMP'S SHALL BE PERFORMED AS SOON AS POSSIBLE AFTER THE CONCLUSION OF EACH STORM, DEPENDING UPON WORKER SAFETY.

9. FOR EACH INSPECTION, A QUALIFIED PERSON SHALL COMPLETE AN INSPECTION CHECKLIST CONTAINING THE FOLLOWING MINIMUM INFORMATION: INSPECTION DATE, WEATHER INFORMATION (BEGINNING/END OF STORM EVENT, DURATION, TIME SINCE LAST STORM, APPROXIMATE RAINFALL IN INCHES), DESCRIPTION OF INADEQUATE BMP'S, LIST OF OBSERVATIONS OF ALL BMP'S AND VISIBLE INSPECTION OF OUTFALLS, DISCHARGE POINTS, DOWNSTREAM LOCATIONS, AND PROJECTED REQUIRED MAINTENANCE ACTIVITIES, CORRECTIVE ACTIONS REQUIRED, INCLUDING CHANGES TO THE WPCP AND IMPLEMENTATION DATES, INSPECTOR'S NAME, TITLE, SIGNATURE, AND QUALIFICATIONS.

10. INDIVIDUALS RESPONSIBLE FOR WPCP, IMPLEMENTATION, AND PERMIT COMPLIANCE SHALL BE APPROPRIATELY TRAINED. THIS INCLUDES THOSE PERSONNEL RESPONSIBLE FOR INSTALLATION, INSPECTION, MAINTENANCE, AND REPAIR OF BMP'S. THOSE RESPONSIBLE FOR OVERSEEING, REVISING, AND AMENDING THE WPCP SHALL ALSO DOCUMENT THEIR TRAINING. THE QUALIFIED PERSON SHALL ATTEND THE PRE-CONSTRUCTION MEETING. THE QUALIFIED PERSON SHALL HAVE KNOWLEDGE AND TRAINING OF THE INTENT AND ENFORCEMENT OF WPCP'S AND BMP'S AND BE PROPERLY TRAINED TO CONDUCT INSPECTIONS AND PREPARE REPORTS OF THE CONSTRUCTION SITE WITH RESPECT TO THE CITY'S MUNICIPAL CODE/ORDINANCES AND THE WPCP.

11. THE CONTRACTOR SHALL MAINTAIN A COPY OF THE WPCP AT THE CONSTRUCTION SITE, WHICH SHALL BE PROVIDED, UPON REQUEST, TO THE RWQCB OR CITY PERSONNEL. THE WPCP IS CONSIDERED A REPORT THAT SHALL BE AVAILABLE TO THE PUBLIC BY THE RWQCB UNDER SECTION 308(B) OF THE CLEAN WATER ACT.

12. RECORDS OF ALL INSPECTIONS, COMPLIANCE CERTIFICATIONS, NONCOMPLIANCE REPORTING, WPCP AND ANY OTHER DOCUMENTS GENERATED AS PART OF WPCP, MUST BE RETAINED FOR A PERIOD OF AT LEAST THREE YEARS FROM THE DATE GENERATED.

13. A CONCRETE WASHOUT SHALL BE INSTALLED FOR ALL PROJECTS THAT PROPOSE CONCRETE TO BE MIXED ON SITE OR DELIVERED FROM A BATCH PLANT. THE CONCRETE WASHOUT SHALL BE LOCATED A MINIMUM OF 50' FROM ANY DRAINAGE INFRASTRUCTURE OR NATURAL DRAINAGE FEATURES OR WATER BODIES AND INCORPORATE AN IMPERMEABLE LINER (6 MIL MIN) TO CONTAIN THE REQUIRED VOLUME. ALL DRIED CONCRETE WASTE SHALL BE BROKEN INTO MANAGEABLE PIECES AND DISPOSED OF IN A PROPER MANNER. THE CONTRACTOR OR QUALIFIED PERSON SHALL LOCATE CONCRETE WASHOUTS IN THIS PRESCRIBED MANNER AS CONSTRUCTION PROGRESSES.

14. THE QUALIFIED PERSON SHALL CONDUCT REGULAR INSPECTIONS OF THE PROJECT SITE IN ACCORDANCE WITH RECOMMENDATIONS OUTLINED IN THE WPCP. EACH INSPECTION SHALL BE DOCUMENTED IN THE FORM OF WRITTEN REPORTS RETAINED ON-SITE. ALL REPORTS SHALL BE MADE AVAILABLE TO THE CITY OF SAN DIEGO AND RWQCB REPRESENTATIVES UPON REQUEST.

15. THE CONTRACTOR SHALL HAVE EMERGENCY MATERIALS AND EQUIPMENT ON HAND FOR UNFORESEEN SITUATIONS, SUCH AS DAMAGE TO UNDERGROUND WATER AND SEWER UTILITIES WHEREBY FLOWS MAY GENERATE EROSION AND SEDIMENT POLLUTION.

16. SEDIMENT AND EROSION CONTROLS MAY BE REMOVED ONLY WHEN CONTRIBUTORY UPSTREAM AREAS BECOME STABILIZED OR ARE MANAGED UPSTREAM (I.E., SINGLE-LOT SEDIMENT CONTROLS) AND AS LONG AS SEDIMENT LADEN RUNOFF WILL NOT DISCHARGE FROM THE SITE.

17. WHEN FUTURE WORK BY THE DEVELOPER NOT SHOWN ON THIS PLAN IS TO BE PERFORMED, THE WPCP SHALL BE AMENDED TO INCLUDE SAID WORK AND ANY ADDITIONAL WATER QUALITY CONTROL MEASURES REQUIRED.

18. WHEN OWNERSHIP CHANGES FOR PORTIONS OF THE SITE OR THE LIMITS OR NATURE OF WORK ARE ALTERED, THE DEVELOPER SHALL FILE A CHANGE OF INFORMATION (COI) OR A REVISED NOTICE OF INTENT (NOI), RESPECTIVELY, WITH THE RWQCB AND SWRCB, RESPECTIVELY.

19. THIS PLAN SHALL BE IN EFFECT UNTIL ALL DISTURBED AREAS ARE PERMANENTLY STABILIZED, TRANSFERRED TO NEW OWNERSHIP, OR DEVELOPED UNDER FUTURE PLANS WITH AN NEW NOI, WPCP, AND WDID NUMBER.

PERMANENT POST-CONSTRUCTION BMP NOTES

1. OPERATION AND MAINTENANCE SHALL BE SECURED BY AN EXECUTED AND RECORDED STORM WATER MANAGEMENT AND DISCHARGE CONTROL MAINTENANCE AGREEMENT (SWMDCMA), OR ANOTHER MECHANISM APPROVED BY THE CITY ENGINEER, THAT ASSURES ALL PERMANENT BMP'S WILL BE MAINTAINED IN PERPETUITY, PER THE LAND DEVELOPMENT MANUAL, STORM WATER STANDARDS.

2. PERMANENT POST CONSTRUCTION BMP DEVICES SHOWN ON PLAN SHALL NOT BE MOVED OR MODIFIED WITHOUT THE APPROVAL OF THE CITY ENGINEER OR RESIDENT ENGINEER AND THE ENGINEER OF WORK.

EROSION AND SEDIMENT CONTROL NOTES

TEMPORARY EROSION/SEDIMENT CONTROL, PRIOR TO COMPLETION OF FINAL IMPROVEMENTS, SHALL BE PERFORMED BY THE CONTRACTOR OR QUALIFIED PERSON AS INDICATED BELOW:

1. ALL REQUIREMENTS OF THE CITY OF SAN DIEGO "LAND DEVELOPMENT MANUAL, STORM WATER STANDARDS" MUST BE INCORPORATED INTO THE DESIGN AND CONSTRUCTION OF THE PROPOSED GRADING/IMPROVEMENTS CONSISTENT WITH THE APPROVED STORM WATER POLLUTION PREVENTION PLAN (SWPPP) AND/OR WATER POLLUTION CONTROL PLAN (WPCP) FOR CONSTRUCTION LEVEL BMP'S AND FOR PERMANENT POST CONSTRUCTION TREATMENT CONTROL PERMANENT BMP'S, THE WATER QUALITY TECHNICAL REPORT (WQTR) IF APPLICABLE.

2. FOR STORM DRAIN INLETS, PROVIDE A GRAVEL BAG SILT BASIN IMMEDIATELY UPSTREAM OF INLET AS INDICATED ON DETAILS.

3. FOR INLETS LOCATED AT SUMPS ADJACENT TO TOP OF SLOPES, THE CONTRACTOR SHALL ENSURE THAT WATER DRAINING TO THE SUMP IS DIRECTED INTO THE INLET AND THAT A MINIMUM OF 1.00' FREEBOARD EXISTS AND IS MAINTAINED ABOVE THE TOP OF THE INLET. IF FREEBOARD IS NOT PROVIDED BY GRADING SHOWN ON THESE PLANS, THE CONTRACTOR SHALL PROVIDE IT VIA TEMPORARY MEASURES, I.E. GRAVEL BAGS OR DIKES.

4. THE CONTRACTOR OR QUALIFIED PERSON SHALL BE RESPONSIBLE FOR CLEANUP OF SILT AND MUD ON ADJACENT STREET(S) AND STORM DRAIN SYSTEM DUE TO CONSTRUCTION ACTIVITY.

5. THE CONTRACTOR OR QUALIFIED PERSON SHALL CHECK AND MAINTAIN ALL LINED AND UNLINED DITCHES AFTER EACH RAINFALL.

6. THE CONTRACTOR SHALL REMOVE SILT AND DEBRIS AFTER EACH MAJOR RAINFALL.

7. EQUIPMENT AND WORKERS FOR EMERGENCY WORK SHALL BE MADE AVAILABLE AT ALL TIMES DURING THE RAINY SEASON. ALL NECESSARY MATERIALS SHALL BE STOCKPILED ON SITE AT CONVENIENT LOCATIONS TO FACILITATE RAPID CONSTRUCTION OF TEMPORARY DEVICES WHEN RAIN IS IMMINENT.

8. THE CONTRACTOR SHALL RESTORE ALL EROSION/SEDIMENT CONTROL DEVICES TO WORKING ORDER TO THE SATISFACTION OF THE CITY ENGINEER OR RESIDENT ENGINEER AFTER EACH RUN-OFF PRODUCING RAINFALL.

9. THE CONTRACTOR SHALL INSTALL ADDITIONAL EROSION/SEDIMENT CONTROL MEASURES AS MAY BE REQUIRED BY THE RESIDENT ENGINEER DUE TO UNCOMPLETED GRADING OPERATIONS OR UNFORESEEN CIRCUMSTANCES, WHICH MAY ARISE.

10. THE CONTRACTOR SHALL BE RESPONSIBLE AND SHALL TAKE NECESSARY PRECAUTIONS TO PREVENT PUBLIC TRESPASS ONTO AREAS WHERE IMPOUNDED WATERS CREATE A HAZARDOUS CONDITION.

11. ALL EROSION/SEDIMENT CONTROL MEASURES PROVIDED PER THE APPROVED GRADING PLAN SHALL BE INCORPORATED HEREON. ALL EROSION/SEDIMENT CONTROL FOR INTERIM CONDITIONS SHALL BE DONE TO THE SATISFACTION OF THE RESIDENT ENGINEER.

12. GRADED AREAS AROUND THE PROJECT PERIMETER MUST DRAIN AWAY FROM THE FACE OF THE SLOPE AT THE CONCLUSION OF EACH WORKING DAY.

13. ALL REMOVABLE PROTECTIVE DEVICES SHOWN SHALL BE IN PLACE AT THE END OF EACH WORKING DAY WHEN RAIN IS IMMINENT.

14. THE CONTRACTOR SHALL ONLY GRADE, INCLUDING CLEARING AND GRUBBING FOR THE AREAS FOR WHICH THE CONTRACTOR OR QUALIFIED PERSON CAN PROVIDE EROSION/SEDIMENT CONTROL MEASURES.

15. THE CONTRACTOR SHALL ARRANGE FOR WEEKLY MEETINGS DURING OCTOBER 1ST TO APRIL 30TH FOR PROJECT TEAM (GENERAL CONTRACTOR, QUALIFIED PERSON, EROSION CONTROL SUBCONTRACTOR IF ANY, ENGINEER OF WORK, OWNER/DEVELOPER AND THE RESIDENT ENGINEER) TO EVALUATE THE ADEQUACY OF THE EROSION/SEDIMENT CONTROL MEASURES AND OTHER RELATED CONSTRUCTION ACTIVITIES.

MINIMUM POST-CONSTRUCTION MAINTENANCE PLAN

AT THE COMPLETION OF THE WORK SHOWN, THE FOLLOWING PLAN SHALL BE FOLLOWED TO ENSURE WATER QUALITY CONTROL IS MAINTAINED FOR THE LIFE OF THE PROJECT:

1. STABILIZATION: ALL PLANTED SLOPES AND OTHER VEGETATED AREAS SHALL BE INSPECTED PRIOR TO OCTOBER 1 OF EACH YEAR AND AFTER MAJOR RAINFALL EVENTS (MORE THAN ½ INCH) AND REPAIRED AND REPLANTED AS NEEDED UNTIL A NOTICE OF TERMINATION (NOT) IS FILED.

2. STRUCTURAL PRACTICES: DESILTING BASINS, DIVERSION DITCHES, DOWNDRAINS, INLETS, OUTLET PROTECTION MEASURES, AND OTHER PERMANENT WATER QUALITY AND SEDIMENT AND EROSION CONTROLS SHALL BE INSPECTED PRIOR TO OCTOBER 1ST OF EACH YEAR AND AFTER MAJOR RAINFALL EVENTS (MORE THAN ½ INCH). REPAIRS AND REPLACEMENTS SHALL BE MADE AS NEEDED AND RECORDED IN THE MAINTENANCE LOG IN PERPETUITY.

3. OPERATION AND MAINTENANCE, FUNDING: POST-CONSTRUCTION MANAGEMENT MEASURES ARE THE RESPONSIBILITY OF THE DEVELOPER UNTIL THE TRANSFER OF RESPECTIVE SITES TO HOME BUILDERS, INDIVIDUAL OWNERS, HOMEOWNERS ASSOCIATIONS, SCHOOL DISTRICTS, OR LOCAL AGENCIES AND/OR GOVERNMENTS. AT THAT TIME, THE NEW OWNERS SHALL ASSUME RESPONSIBILITY FOR THEIR RESPECTIVE PORTIONS OF THE DEVELOPMENT.

STORMWATER PROTECTION NOTES

1. DURING THE RAINY SEASON THE AMOUNT OF EXPOSED SOIL ALLOWED AT ONE TIME SHALL NOT EXCEED THAT WHICH CAN BE ADEQUATELY PROTECTED BY THE PROPERTY OWNER IN THE THE EVENT OF A RAINSTORM. 125% OF ALL SUPPLIES NEEDED FOR BMP (BEST MANAGEMENT PRACTICES) MEASURES SHALL BE RETAINED ON THE JOB SITE IN A MANNER THAT ALLOWS FULL DEPLOYMENT AND COMPLETE INSTALLATION IN 48 HOURS OR LESS OF A FORECAST RAIN.

2. THE PROPERTY OWNER IS OBLIGATED TO INSURE COMPLIANCE WITH ALL APPLICABLE STORMWATER REGULATIONS AT ALL TIMES. THE BMP'S THAT HAVE BEEN INCORPORATED INTO THIS PLAN SHALL BE IMPLEMENTED AND MAINTAINED TO EFFECTIVELY PREVENT THE POTENTIALLY NEGATIVE IMPACTS OF THIS PROJECT'S CONSTRUCTION ACTIVITIES ON STORWATER QUALITY. THE MAINTENANCE OF THE BMP'S IS THE PERMITTEE'S RESPONSIBILITY, AND FAILURE TO PROPERLY INSTALL OR MAINTAIN THE BMP'S MAY RESULT IN ENFORCEMENT ACTION BY THE CITY OF SAN DIEGO OR OTHERS. IF INSTALLED BMP'S FAIL, THEY MUST BE REPAIRED OR REPLACED WITH AN ACCEPTABLE ALTERNATIVE WITHIN 24 HOURS, OR AS SOON AS SAFE TO DO SO.

BONDED FIBER MATRIX (BFM)

THE USE OF BFM IS SUBJECT TO THE FOLLOWING LIMITATIONS AND RESTRICTIONS:

1. APPLICATION RATES SHALL BE 3500 POUNDS PER ACRE MINIMUM FOR 2:1 OR SHALLOWER SLOPES AND 4000 POUNDS PER ACRE FOR SLOPES STEEPER THAN 2:1

2. BFM SHALL BE APPLIED AT LEAST 24 HOURS BEFORE OR AFTER RAINFALL.

3. THE SITE MUST BE PROTECTED WITH BROW DITCHES AND / OR DIVERSION BERMS AT THE TOP OF SLOPES TO DIVERT FLOW FROM THE FACE OF THE SLOPE.

4. BFM SHALL BE APPLIED TO PROVIDE 100% COVERAGE (IE APPLICATION FROM MULTIPLE ANGLES).

5. FOR PERMANENT EROSION CONTROL PURPOSES, BFM MUST BE INSTALLED IN CONJUNCTION WITH SEEDED EROSION CONTROL VEGETATION.

6. A LETTER FROM THE HYDROSEED CONTRACTOR CERTIFYING THAT THE BFM HAS BEEN INSTALLED IN ACCORDANCE WITH THE APPROVED APPLICATION RATES AND COVERAGE REQUIREMENTS SHALL BE SUBMITTED TO THE COUNTY INSPECTOR FOR APPROVAL.

FIBER MATRIX (FM)

THE USE OF SFM IS SUBJECT TO THE FOLLOWING LIMITATIONS AND RESTRICTIONS:

1. SFM MAY BE USED FOR TEMPORARY EROSION CONTROL FOR DISTURBED AREAS, INCLUDING PAD AND SEPTIC FIELD AREAS.

2. THE SFM SHALL BE APPLIED AT LEAST 24 HOURS BEFORE OR AFTER RAINFALL AND SHALL BE APPLIED TO PROVIDE 100% COVERAGE (I.E. APPLIED FROM MULTIPLE DIRECTIONS AND ANGLES).

3. THE APPLICATION AREA MUST BE PROTECTED BY BROW DITCHES AND OR DIVERSION BERMS AT TOP OF SLOPES TO DIVERT FLOW FROM THE FACE OF THE PROTECTED SLOPE.

4. FOR PERMANENT EROSION CONTROL PURPOSES, SFM MUST BE INSTALLED IN CONJUNCTION WITH SEEDED EROSION CONTROL VEGETATION OR HAND PLANTINGS. AS WITH ALL OTHER APPLICATIONS, SFM WILL NOT BE CONSIDERED PERMANENT UNTIL 70% VEGETATION ESTABLISHMENT.

5. COVERAGE AND CONCENTRATION: FOR EACH ACRE COVERED, THE MINIMUM APPLICATION VOLUME SHALL BE 10 GALLONS NON-TOXIC WATER-PERMEABLE SOIL-STABILIZING LIQUID EMULSION WITH 3,000 LBS. OF HYDRAULIC MULCH. THE EMULSION MUST BE DESIGNED TO PROTECT SOIL, PREVENT EROSION, AND FLOCCULATE (CLUMP) SEDIMENT.

6. A LETTER FROM THE HYDROSEED CONTRACTOR CERTIFYING THE SFM WAS INSTALLED IN ACCORDANCE WITH APPROVED APPLICATION RATES, COVERAGE, AND MANUFACTURER'S DILUTION RATION SHALL BE SUBMITTED TO THE COUNTY INSPECTOR FOR APPROVAL.

TEMPORARY GRAVEL CONSTRUCTION ENTRANCE/EXIT (A / C-10)

SCALE: NTS

NOTES:
1. GRAVEL BAGS, OF EITHER BURLAP OR WOVEN GEOTEXTILE FABRIC, ARE FILLED WITH GRAVEL, LAYERED AND PACKED TIGHTLY.
2. LEAVE ONE GRAVEL BAGS GAP IN THE TOP ROW TO PROVIDE A SPILLWAY FOR OVERFLOW.
3. INSPECT BARRIERS AND REMOVE SEDIMENT AFTER EACH STORM EVENT. SEDIMENT AND GRAVEL MUST BE REMOVED FROM THE TRAVELED WAY IMMEDIATELY.

CATCH BASIN / INLET PROTECTION (B / C-10)

SCALE: NTS

GRAVEL BAG DETAIL (C / C-10)

SCALE: NTS

NOTE:
1. STRAW ROLL INSTALLATION REQUIRES THE PLACEMENT AND SECURE STAKING OF THE ROLL IN A TRENCH, 3"-5" DEEP, DUG ON CONTOUR RUNOFF MUST NOT BE ALLOWED TO RUN UNDER OR AROUND ROLL.
2. STRAW ROLLS MUST BE PLACED ALONG SLOPE CONTOURS

FIBER ROLL (D / C-10)

SCALE: NTS

NOTES:
1. SILT FENCE SHALL BE PLACED ON SLOPE CONTOURS TO MAXIMIZE PONDING EFFICIENCY.

2. INSPECT AND REPAIR FENCE AFTER EACH STORM EVENT AND REMOVE SEDIMENT WHEN NECESSARY. 9" MAXIMUM RECOMMENDED STORAGE HEIGHT.

3. REMOVED SEDIMENT SHALL BE DEPOSITED TO AN AREA THAT WILL NOT CONTRIBUTE SEDIMENT OFF-SITE AND CAN BE PERMANENTLY STABILIZED.

SILT FENCE (E / C-10)

SCALE: NTS

HYDROSEED MIX

HYDROSEED MIX	
LASTHENIA CHRYSOSTOMA	1.5 LBS/ACRE
PLANTAGO INSULARIS	100 LBS/ACRE
ADDITIONAL MATERIALS:	
MULCH - CORNMED FIBER	2,000 LBS/ACRE
BINDER - TERRA TAC #3	200 LBS/ACRE
FERTILIZER: 16-20-0	175 LBS/ACRE

C-10

RBF CONSULTING
A Baker Company
9755 CLAIREMONT MESA BLVD.
SAN DIEGO, CA. 92124
858-614-5000

SPEC. NO. 8147

PROFESSIONAL ENGINEER ERNEST R. ACUNA No. 46717 Exp. 12/31/14 CIVIL STATE OF CALIFORNIA

PLANS FOR THE CONSTRUCTION OF
South Mission Beach Lifeguard Station

Erosion Control Notes and Details | C-10

CITY OF SAN DIEGO, CALIFORNIA
ENGINEERING & CAPITAL PROJECTS
ARCHITECTURAL ENGINEERING & CONTRACTS DIVISION
SHEET 16 OF 94 SHEETS

WBS S-00791

APPROVED: FOR CITY ENGINEER — 10/13/2014 DATE

SUBMITTED BY: JIHAD SLEIMAN, PROJECT MANAGER

DESCRIPTION	BY	APPROVED	DATE	FILMED
ORIGINAL	WH/TT			

YOUSIF BENYAMIN, PROJECT ENGINEER
218-1693 CCS27 COORDINATES
1858-6253 CCS83 COORDINATES

CONTRACTOR ______ DATE STARTED ______
INSPECTOR ______ DATE COMPLETED ______

32849-16-D

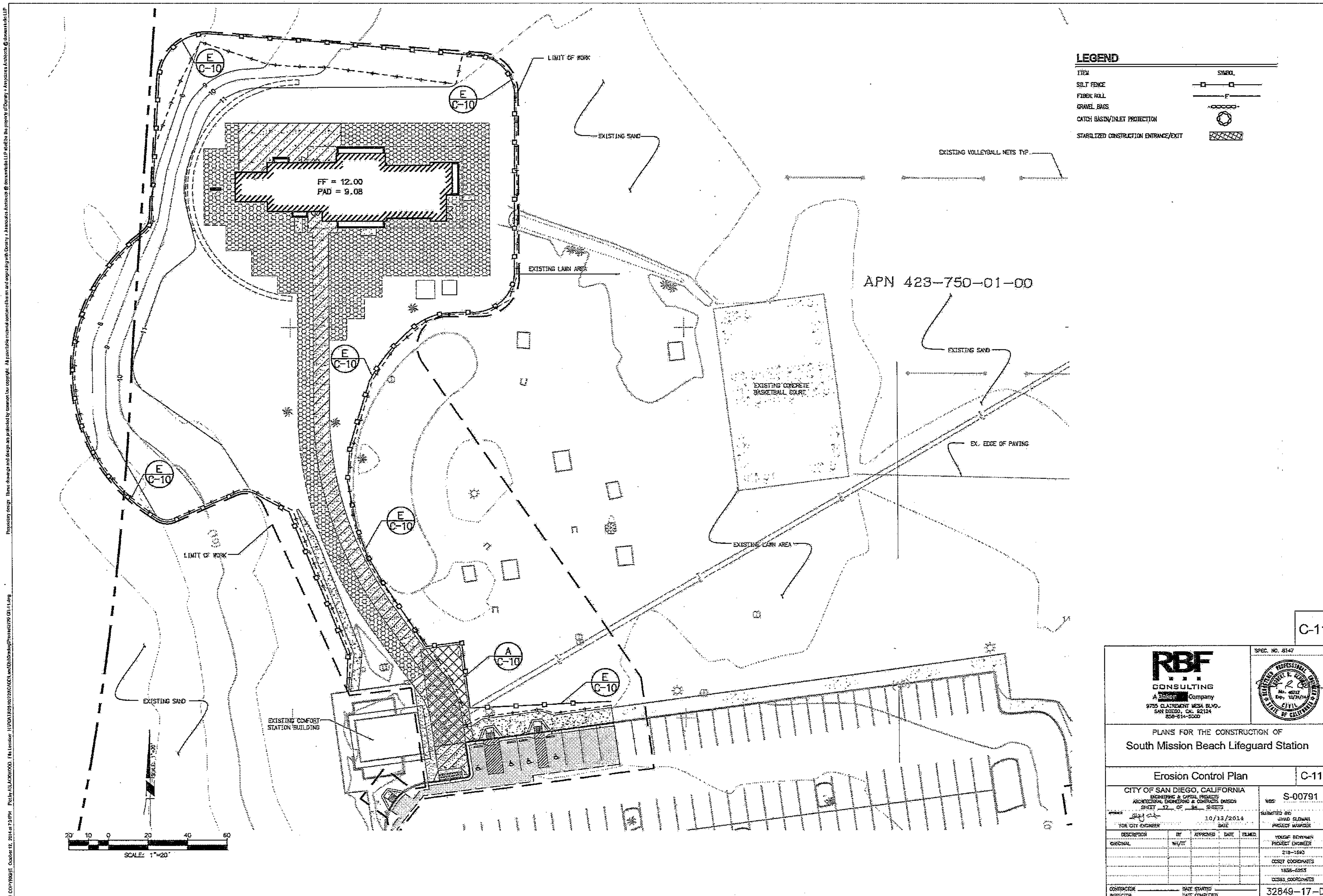

South Mission Beach Lifeguard Station
700 N. Jetty Road
LEGEND
ITEM
SYMBOL
SILT FENCE
FIBER ROLL
GRAVEL BAGS
CATCH BASIN/INLET PROTECTION
STABILIZED CONSTRUCTION ENTRANCE/EXIT
LIMIT OF WORK
EXISTING SAND
EXISTING VOLLEYBALL NETS TYP.
FF = 12.00
PAD = 9.08
EXISTING LAWN AREA
APN 423-750-01-00
EXISTING CONCRETE BASKETBALL COURT
EX. EDGE OF PAVING
E C-10
A C-10
EXISTING COMFORT STATION BUILDING
SCALE: 1"=20'
20 10 0 20 40 60
C-11
RBF CONSULTING
A Baker Company
9755 CLAIREMONT MESA BLVD.
SAN DIEGO, CA. 92124
858-614-5000
SPEC. NO. 8147
PLANS FOR THE CONSTRUCTION OF
South Mission Beach Lifeguard Station
Erosion Control Plan
C-11
CITY OF SAN DIEGO, CALIFORNIA
ENGINEERING & CAPITAL PROJECTS
ARCHITECTURAL ENGINEERING & CONTRACTS DIVISION
SHEET 17 OF 94 SHEETS
10/13/2014
FOR CITY ENGINEER
DATE
WBS: S-00791
SUBMITTED BY:
JIHAD SLEIMAN
PROJECT MANAGER
DESCRIPTION
BY
APPROVED
DATE
FILMED
ORIGINAL
WH/TT
YOUSIF BENYAMIN
PROJECT ENGINEER
218-1693
CCS27 COORDINATES
1858-6253
CCS83 COORDINATES
CONTRACTOR
DATE STARTED
INSPECTOR
DATE COMPLETED
32849-17-D

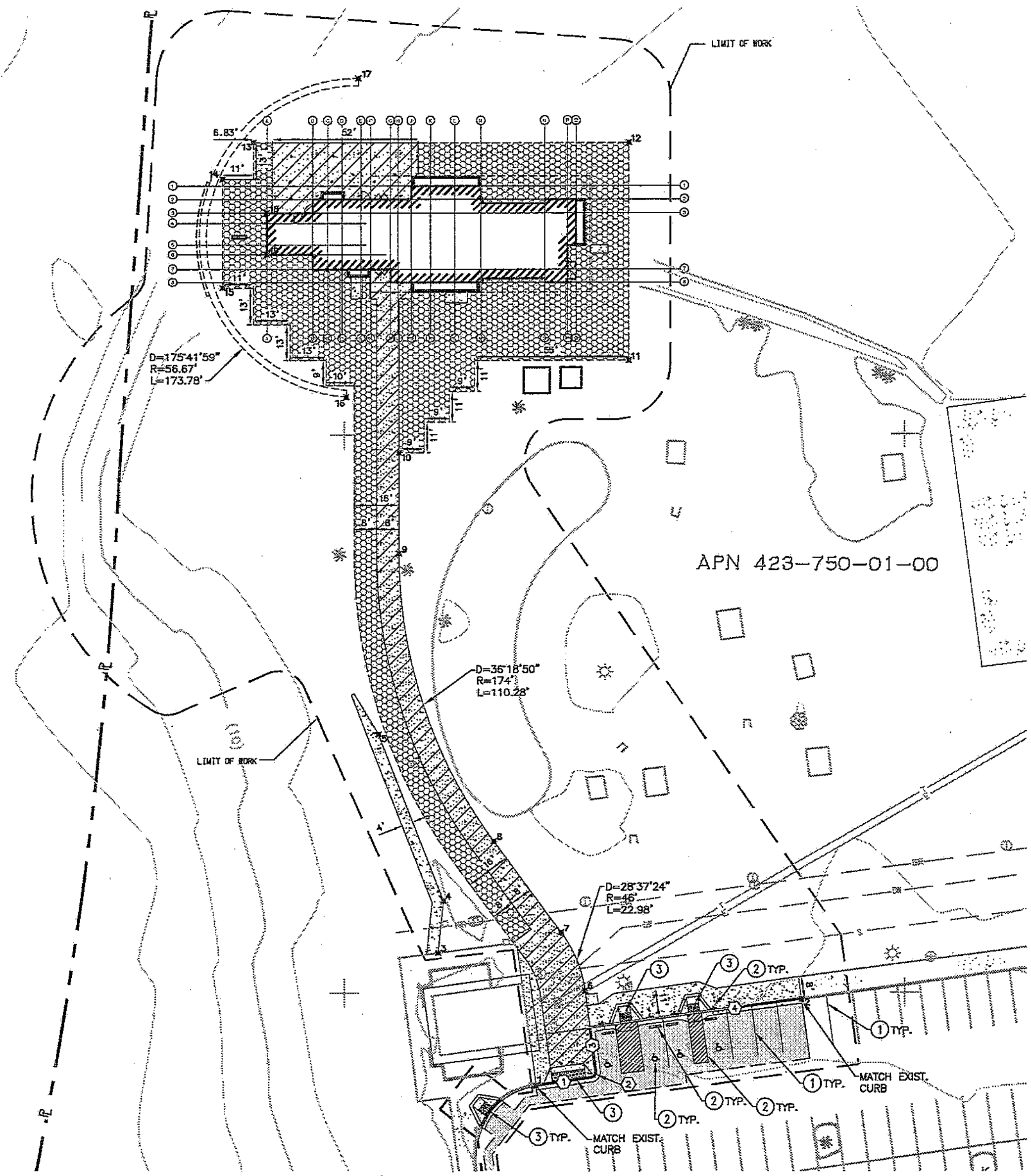

CONSTRUCTION NOTES

1. PAINT 4" WHITE STRIPES AS SHOWN
2. INSTALL ACCESSIBLE PARKING AS SHOWN THAT INCLUDES STRIPING, ISA SYMBOL, WHEEL STOPS AND SIGNAGE PER SDM-117
3. INSTALL TRUNCATED DOMES WARNING TILE PER SDG-130

CURB DATA TABLE

NO	BEARING/DELTA	RADIUS	LENGTH	NOTE
1	N 82°18'34" E	—	19.84'	6" CURB AND GUTTER
2	90°00'00"	2.00'	3.14'	6" CURB AND GUTTER
3	N 07°41'26" W	—	16.00'	6" CURB AND GUTTER
4	N 82°18'34" E	—	76.00'	6" CURB AND GUTTER

COORDINATE TABLE

NO.	NORTHING	EASTING
1	1857736.1192	6253374.7970
2	1857767.0504	6253469.3462
3	1857783.9827	6253339.7754
4	1857802.7557	6253341.6813
5	1857862.5060	6253318.5246
6	1857770.2554	6253392.2235
7	1857791.3412	6253383.7034
8	1857824.0968	6253359.6296
9	1857927.1413	6253325.8360
10	1857963.2046	6253325.8360
11	1857996.2061	6253407.8360
12	1858073.8727	6253407.8360
13	1858073.8727	6253273.6360
14	1858060.8727	6253262.8360
15	1858022.2061	6253262.8360
16	1857983.1122	6253307.0040
17	1858096.2927	6253311.2527
18	1858048.8728	6253278.6693
19	1858033.8728	6253278.6693

SURVEYOR NOTE

CONTRACTOR SHALL EMPLOY A LICENSED SURVEYOR TO STAKE OUT THE PROPOSED IMPROVEMENTS.

SCALE: 1"=20'

C-12

RBF CONSULTING
A Baker Company
9755 CLAIREMONT MESA BLVD.
SAN DIEGO, CA. 92124
858-614-5000

SPEC. NO. 8147

PLANS FOR THE CONSTRUCTION OF
South Mission Beach Lifeguard Station

Horizontal Control Plan | C-12

CITY OF SAN DIEGO, CALIFORNIA
ENGINEERING & CAPITAL PROJECTS
ARCHITECTURAL ENGINEERING & CONTRACTS DIVISION
SHEET 18 OF 94 SHEETS

WBS S-00791

APPROVED: FOR CITY ENGINEER — DATE 10/13/2014

SUBMITTED BY: JIHAD SLEIMAN, PROJECT MANAGER

DESCRIPTION	BY	APPROVED	DATE	FILMED
ORIGINAL	WH/TT			

YOUSIF BENYAMIN
PROJECT ENGINEER
218-1693
CCS27 COORDINATES
1858-6253
CCS83 COORDINATES

CONTRACTOR ______ DATE STARTED ______
INSPECTOR ______ DATE COMPLETED ______

32849-18-D

South Mission Beach Lifeguard Station
700 N. Jetty Road

South Mission Beach Lifeguard Station
700 N. Jetty Road

COASTAL DEVELOPMENT PERMIT NO. 6-11-044
SPECIAL CONDITIONS NOTES:

1. NO ADVERTISING SHALL BE PERMITTED ON THE APPROVED STRUCTURES.

2. CLOCKS, TEMPERATURE DISPLAYS, OR OTHER SAFETY INFORMATION MAY BE LOCATED ON THE FACADE OF THE APPROVED STRUCTURES.

3. ANY FILL MATERIAL USED DURING CONSTRUCTION SHALL BE CLEAN, BEACH COMPATIBLE MATERIAL WITH NO RUBBLE, ORGANICS, OR OTHER DEBRIS.

4. DURING CONSTRUCTION OF THE APPROVED DEVELOPMENT, DISTURBANCES TO SAND AND INTERTIDAL AREAS SHALL BE MINIMIZED TO THE MAXIMUM EXTENT FEASIBLE. ALL EXCAVATED BEACH SAND SHALL BE REDEPOSITED ON THE BEACH. LOCAL SAND, COBBLES OR SHORELINE ROCKS SHALL NOT BE USED FOR BACKFILL OR FOR ANY OTHER PURPOSE AS CONSTRUCTION MATERIAL.

5. THE LANDSCAPING PROPOSED ALONG THE PERIMETER OF THE NEW LIFEGUARD STATION SHALL BE DELETED.

6. NO OVERNIGHT STORAGE OF EQUIPMENT OR MATERIALS SHALL OCCUR ON SANDY BEACH OR PUBLIC PARKING SPACES.

7. ACCESS CORRIDORS SHALL BE LOCATED IN A MANNER THAT HAS THE LEAST IMPACT ON PUBLIC ACCESS TO AND ALONG THE SHORELINE VIA MISSION BLVD, OCEAN FRONT WALK AND THE PUBLIC PARKING LOT SOUTH OF THE PROJECT SITE.

8. NO WORK SHALL OCCUR ON THE BEACH BETWEEN MEMORIAL DAY WEEKEND AND LABOR DAY OF ANY YEAR.

9. THE STAGING SITE SHALL BE REMOVED AND/OR RESTORED IMMEDIATELY FOLLOWING COMPLETION OF THE DEVELOPMENT.

__NOTE__: THE CONTRACTOR WILL NOT HAVE USE OF THE PARKING LOT FOR CONSTRUCTION VEHICLE PARKING DURING CONSTRUCTION

__NOTE__: THE EXISTING TOTAL PARKING COUNT, (276) SPACES WILL BE REDUCED TO 274 SPACES - (266) STANDARD AND (8) ACCESSIBLE SPACES. THE (4) ACCESSIBLE SPACES LOCATED AT THE SOUTHWEST CORNER OF THE PARKING LOT TO REMAIN.

__NOTE__: THE CONSTRUCTION OF THE FACILITIES WILL BE TAKING PLACE ON THE BEACH LOCATED SEAWARD OF THE MISSION BEACH BOARDWALK. AS SUCH, THE CONSTRUCTION ACTIVITIES REQUIRED FOR CONSTRUCTION WILL BE TAKING PLACE ON TOP OF FAIRLY CLEAN SANDS WHICH IN THE DRY HAVE POOR NEAR-SURFACE BEARING CAPACITY AND TRENCH EXCAVATION STABILITY DUE TO THE LACK OF FINE CONTENT WITHIN THE SOIL. THUS, CONSTRUCTION ACTIVITIES WILL NEED TO CONSIDER THE POTENTIAL DIFFICULTY OF USING CONSTRUCTION EQUIPMENT WITH STANDARD WHEELS AND THE POTENTIAL FOR CONTINUED DISTURBANCE OF NEAR-SURFACE SOILS. THE CONTRACTOR WILL NEED TO CONSIDER THE POTENTIAL BENEFITS OF USING LOW BEARING PRESSURE EQUIPMENT, PLANKING AND OTHER SURFACE PAVEMENT MATS, THE USE OF WATER, AND/OR OTHER APPROVED SOIL STABILIZATION METHODS TO FACILITATE HIS OPERATIONS.

__EXISTENCE OF ROCK__

IT SHOULD BE NOTED THAT ANY OF THE INSTALLATION TECHNIQUES DESCRIBED ABOVE WILL MEET REFUSAL ON ANY RIPRAP OR DEBRIS LEFT IN-PLACE. THE CONTRACTOR SHOULD BE AWARE OF THE POSSIBLE PRESENCE OF EXISTING RIPRAP AND DEBRIS EXTENDING TO AN UNDETERMINED DEPTH ALONG THE SHEET-PILE ALIGNMENT, WHICH WILL REQUIRE REMOVAL PRIOR TO SHEET-PILE INSTALLATION.

Site Plan Keyed Notes (A0.1 and A0.2)

- [1] EXISTING CONCRETE WALK TO BE DEMOLISHED. SEE CIVIL PLANS FOR EXTENT OF DEMOLITION AND A1.0 FOR PHASING.
- [2] EXISTING CONCRETE WALK TO REMAIN.
- [3] REMAINING EXISTING LIFEGUARD BUILDING AND ELECTRICAL SERVICE TO BE REMOVED AFTER THE NEW LIFEGUARD BUILDING IS COMPLETED AND OPERATIONAL WITH OCCUPANCY. CONTRACTOR TO VERIFY DEMOLITION SEQUENCE. CAP ALL UTILITIES BELOW GRADE AFTER DEMO – TO MUNICIPAL AND FRANCHISE UTILITY STANDARDS. SEE CIVIL AND ELECTRICAL PLANS. RESTORE GRADE AND SAND FINISH TO MATCH EXISTING.
- [4] EXISTING FENCE RAIL TO BE DEMOLISHED. SEE CIVIL PLANS FOR EXTENT OF DEMOLITION AND A1.0 FOR PHASING.
- [5] EXISTING RIP RAP NEAR AND AROUND (WITHIN 50' FROM ALL SIDES OF) EXISTING STATION AND NEW STATION EXPOSED DURING GRADING AND / OR DEMO TO BE REMOVED. SEE CIVIL AND SPECIFICATIONS FOR UNIT PRICE PER TON.
- [6] EXISTING LANDSCAPE BERMS TO BE REMOVED AT LOCATIONS OF SIDEWALK AND EROSION CONTROL MATS. REMAINING DISTURBED EDGES OF LANDSCAPE BERMS TO BE SLOPE BLENDED AND PLANTED TO APPEAR NATURAL AND MATCH EXISTING
- [7] EXISTING COMFORT STATION STATION TO REMAIN – NO PROPOSED WORK IN THIS FACILITY
- [8] EXISTING LAWN AND LANDSCAPING TO REMAIN.
- [9] EXISTING PARKING LAYOUT AND STRIPING TO BE UNCHANGED.
- [10] EXISTING RED CURB TO REMAIN. PROVIDE NEW PAINT.
- [11] TELEPHONE PULL BOX
- [12] PROVIDE TEMPORARY 6' HIGH CHAIN LINK FENCE W/ TAN SCREEN WHILE WORK IS BEING DONE. – (SEE A1.0)
- [12A] PROVIDE 6' HIGH CHAIN LINK FENCE W/ TAN SCREEN AT AREA OF WORK. – (SEE A1.0)
- [13A] CONCRETE FLAT WORK. __DRIVE–ON__ SURFACE PER CIVIL PLANS. MATCH ELEVATION OF NEW CONCRETE TO EXISTING WHERE NECESSARY.
- [13B] CONCRETE FLAT WORK __WALK–ON__ SURFACE PER CIVIL PLANS. MATCH ELEVATION OF NEW CONCRETE TO EXISTING WHERE NECESSARY.
- [14] DRIVEWAY APPROACH. SEE CIVIL DRAWINGS
- [15] EROSION CONTROL MAT PER CIVIL DRAWINGS.
- [16] EXISTING LOCATION OF (4) ACCESSIBLE SPACES TO REMAIN.
- [17] NEW FIRE HYDRANT PER CIVIL DRAWINGS.
- [18] BELOW GRADE EROSION BARRIER PER STRUCTURAL AND CIVIL DRAWINGS
- [19] CONCRETE CAP PER STRUCTURAL DRAWINGS.
- [19A] CONCRETE CAP "BEACH CASTLES" PUBLIC ART – SEE PA–0.1
- [20] MAIN SERVICE ELECTRICAL EQUIPMENT SEE ELECTRICAL AND CIVIL DRAWINGS
- [21] ELECTRICAL TRANSFORMER. SEE ELECTRICAL PLANS. (COORDINATE DEMO W/ EXISTING TOWER DEMO AND INSTALL OF NEW TRANSFORMER OPERATIONAL W/ NEW STATION)
- [22] FIRE LANE ENTRANCE SIGN. SEE DETAIL 16/A5.2
- [23] OFF–STREET PARKING SIGN. SEE DETAIL 12/A5.0
- [24] SITE ACCESSIBILITY SIGN. SEE DETAIL 6/A5.0 (DIRECTIONAL SIGNAGE AS INDICATED BY ARROW)
- [25] CURB RAMP. SEE CIVIL PLANS AND 19/A5.0 FOR ADDITIONAL INFORMATION.
- [26] CONCRETE CURB. SEE CIVIL DRAWINGS
- [27] EXISTING PLANTING AREA TO REMAIN
- [28] +0"–0" CURB. SEE CIVIL AND LANDSCAPE DRAWINGS
- [29] KNOX BOX PER FIRE DEPARTMENT REQUIREMENTS. VERIFY LOCATION.
- [30] EXISTING TRASH AREA TO REMAIN
- [31] FIRE RISER PER FIRE DEPARTMENT REQUIREMENTS. SEE FIRE PROTECTION PLANS
- [32] FIRE SERVICE DETECTOR ASSEMBLY, CONCRETE PAD, POST INDICATOR VALVES AND SIGN PER CITY OF SAN DIEGO STANDARD DETAILS AND FIRE DEPARTMENT REQUIREMENTS
- [33] FLAG POLE PER SPECS WITH BIRD PROOFING ON TOP.
- [34] WATER SERVICE PRESSURE REDUCING VALVE (PRV) – SEE CIVIL & PLUMBING DWGS.
- [35] NEW WATER SERVICE & METER –SEE CIVIL DRAWINGS
- [36] BIOFILTER PLANTER – SEE CIVIL DRAWINGS
- [37] NEW TRANSFORMER – SEE ELECTRICAL DRAWINGS
- [38] NEW PARKING STRIPING, TYP. SEE DETAIL 1/A5.0
- [39] ACCESSIBLY PARKING SPACE. SEE DETAIL 1/A5.0
- [40] PRECAST WHEEL STOP. SEE DETAIL 1/A5.0
- [41] CAST IN PLACE CONCRETE WALL W/ BLACK SLATE VENEER – SEE STRUCTURAL DWGS.
- [42] HATCHED ARREA INDICATES REMOVE AND REPLACE CONCRETE WALK AND CURB – SEE CIVIL DRAWINGS
- [43] REPLACE EXISTING CRACKED 'ZERO' CURB AND CONCRETE PANELS. PROVIDE NEW CONCRETE WALK ADDITION, PER CITY STANDARDS – SEE CIVIL DRAWINGS
- [44] FIRE SERVICE PER CIVIL DRAWINGS
- [45] SAND / OIL SEPARATOR PER CIVIL AND PLUMBING DRAWINGS
- [46] PROVIDE APPROXIMATELY 104 LINEAL FEET OF NEW 4'–0" WIDE (MIN.) TEMPORARY CONCRETE WALK PER CITY STANDARDS – SEE CIVIL DRAWINGS
- [47] BICYCLE RACK – SEE DETAIL 14/A5.6
- [48] DEMOUNTABLE POSTS PER CIVIL DRAWINGS
- [49] INDICATES 2'–0" WIDE CONCRETE CURB AT BUILDING PERIMETER TO CONNECT TO ARMOR FLEX MAT AND BUILDING FOUNDATION – SEE CIVIL DETAIL B/C–4
- [50] DESIGNATED PARKING STALLS FOR LIFEGUARDS – SEE SIGNAGE DETAIL 13/A5.0

Site Plan Notes

1. SEE CIVIL PLANS FOR: LOCATION AND DETAILS OF HARDSCAPE WALKS AND DRIVEWAYS, RAMPS, HANDRAILS, GUARDRAILS, FREE STANDING PLANTERS & RETAINING WALLS.
2. GRADING PLAN IS PART OF THIS PERMIT, SEE CIVIL PLANS FOR: ALL SITE DIMENSIONS NOT SHOWN ON THIS PLAN, DRAINAGE ELEVATIONS, SITE UTILITIES, CURBS, SITE RETAINING WALLS AND DETAILS. VERIFY ALL DIMENSIONS WITH CIVIL DRAWINGS
3. CONTRACTOR TO VERIFY EXISTING CONDITIONS AND OBTAIN SEPARATE DEMOLITION PERMIT PRIOR TO COMMENCEMENT OF ANY WORK. REMOVE ALL EXISTING WALLS, STRUCTURES, FENCES, A/C OR CONCRETE PAVING, ETC. AS REQUIRED FOR NEW CONSTRUCTION. SEE SHEET A1.0 AND CIVIL PLAN FOR ADDITIONAL INFORMATION
4. CONTRACTOR TO CONFIRM ALL UTILITY LOCATIONS PRIOR TO GRADING
5. NEAREST BUS STOP IS LOCATED APPROX. (1) MILE AWAY, LOCATED AT THE CORNER OF MISSION BLVD. AND MISSION BAY DRIVE.
6. PROPOSED STATION TO CONNECT TO EXISTING UTILITIES
7. CONTRACTOR TO POTHOLE EXISTING SEWER LINE AT NEW LATERAL TO CONFIRM I.E. 8.31"
8. PROPOSED PRIVATE UNDERGROUND SEWER FACILITIES LOCATED WITHIN A SINGLE LOT SHALL BE DESIGNED TO MEET THE REQUIREMENTS OF THE CALIFORNIA UNIFORM PLUMBING CODE AND SHALL BE REVIEWED AS PART OF THE BUILDING PERMIT PLAN CHECK.
9. ALL NEW ON SITE UTILITIES SHALL BE PLACED UNDERGROUND U.N.O. ON THIS PLAN. SEE CIVIL PLANS.
10. STREET ADDRESS SHALL BE LOCATED IN ACCORDANCE WITH THE MUNICIPAL CODE. SEE EXTERIOR ELEVATIONS FOR LOCATIONS
11. ALL PROPERTY LINES, BUILDINGS, BOTH EXISTING AND PROPOSED ARE SHOWN ON THIS SITE PLAN SHEET A0.1.
12. HEIGHT CERTIFICATION IS REQUIRED PRIOR TO FRAMING INSPECTION APPROVAL
13. SURFACE WATER WILL DRAIN AWAY FROM BUILDING. SEE CIVIL DRAWINGS
14. POST INDICATOR VALVES, FIRE DEPARTMENT CONNECTIONS, AND ALARM BELL ARE TO BE LOCATED ON THE ADDRESS/ACCESS SIDE OF THE STRUCTURE. UFC 1001.4
15. FIRE ACCESS LANE TO BE DESIGNED FOR WEIGHT OF 95,000 LBS.

Symbols

- ◀ – SYMBOL INDICATES ACCESSIBLE BUILDING ENTRANCES
- ● ● ● ● ● ● – SYMBOL INDICATES ACCESSIBLE ROUTE TO PUBLIC WAY – (MAX. SLOPE = 5% ; CROSS SLOPE = 1.5% ; SLIP RESISTANT TO BE XXXXX OR BETTER AT ALL NEW SURFACES ALONG PATH)
- - - - - - - - INDICATES FIRE LANE & RED CURB. CURBS TO BE PAINTED RED W/ WHITE LETTERS. "NO PARKING FIRE LANE" AT A MAXIMUM OF 30 FEET ON CENTER PER CITY OR FIRE DEPT. STANDARDS. PROVIDE FIRE SIGNS AS REQUIRED (SEE KEYNOTE #10)
- – CONCRETE FLAT WORK PER CIVIL PLANS
- – ERROSION CONTROL MAT PER CIVIL PLANS AND SPEC.
- — · — · — INDICATES LIMITS OF WORK & CONSTRUCTION FENCING
- INDICATES EXTENT OF ARMORFLEX CONCRETE MATTRESS AROUND BUILDING PERMITER

SEE SHEET T2.0 FOR LANDSCAPE NOTES

SEE CITY DOCUMENTS & SHEET T4.0 FOR __SITE DEVELOPMENT__ CONDITIONS OF APPROVAL, CONTRACTOR NEEDS TO COMPLY WITHIN THE PERMIT REQUIREMENTS.

SEE THIS SHEET, CITY DOCUMENTS, & SHEET T5.0 FOR __COASTAL DEVELOPMENT__ CONDITIONS OF APPROVAL, CONTRACTOR NEEDS TO COMPLY WITHIN THE PERMIT REQUIREMENTS.

SEE SHEET A0.2 FOR ENLARGED SITE PLAN

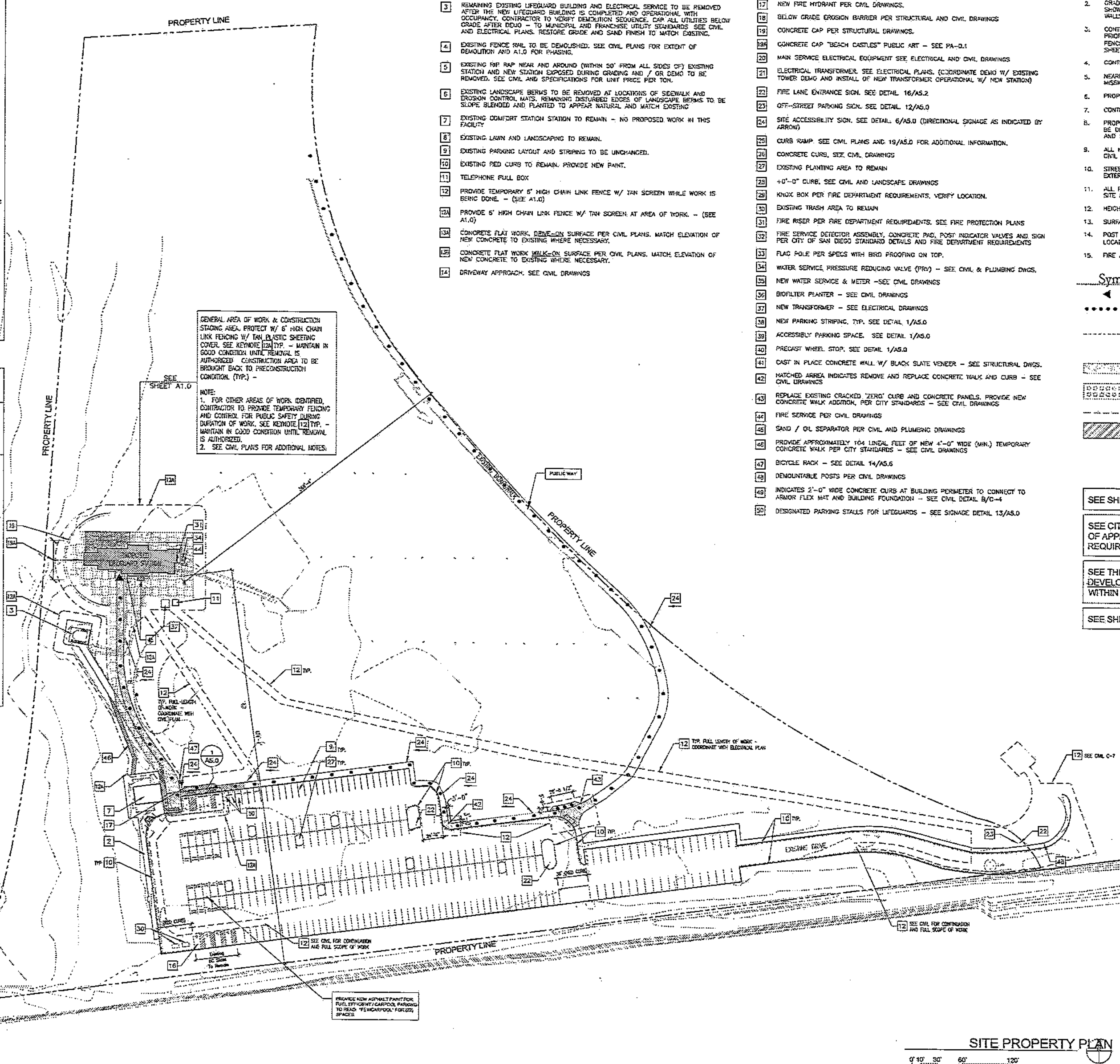

SITE PROPERTY PLAN

SCALE: 1" = 60'

A-1

Domusy + Associates Architects @ domusstudio
2150 West Washington, Suite 303
San Diego, California 92110
Tel 619.692.9393
Fax 619.692.9394
domusstudio.com

SPEC. NO 8147

LICENSED ARCHITECT WAYNE HOLTAN No. C12113 REN 9.30.15 STATE OF CALIFORNIA

PLANS FOR THE CONSTRUCTION OF

South Mission Beach Lifeguard Station

Site Plan - Property Boudries & Parking | **A0.1**

CITY OF SAN DIEGO, CALIFORNIA
ENGINEERING & CAPITAL PROJECTS
ARCHITECTURAL ENGINEERING & CONTRACTS DIVISION
SHEET 19 OF 94 SHEETS

WBS S-00791

APPROVED: [signature] FOR CITY ENGINEER — DATE 10/13/2014

SUBMITTED BY: JIHAD SLEIMAN, PROJECT MANAGER

DESCRIPTION	BY	APPROVED	DATE	FILMED
ORIGINAL	WH/TT			

YOUSIF BENYAMIN — PROJECT ENGINEER
218-1693 — CCS27 COORDINATES
1858-6253 — CCS83 COORDINATES

CONTRACTOR ______ DATE STARTED ______
INSPECTOR ______ DATE COMPLETED ______

32849-19-D

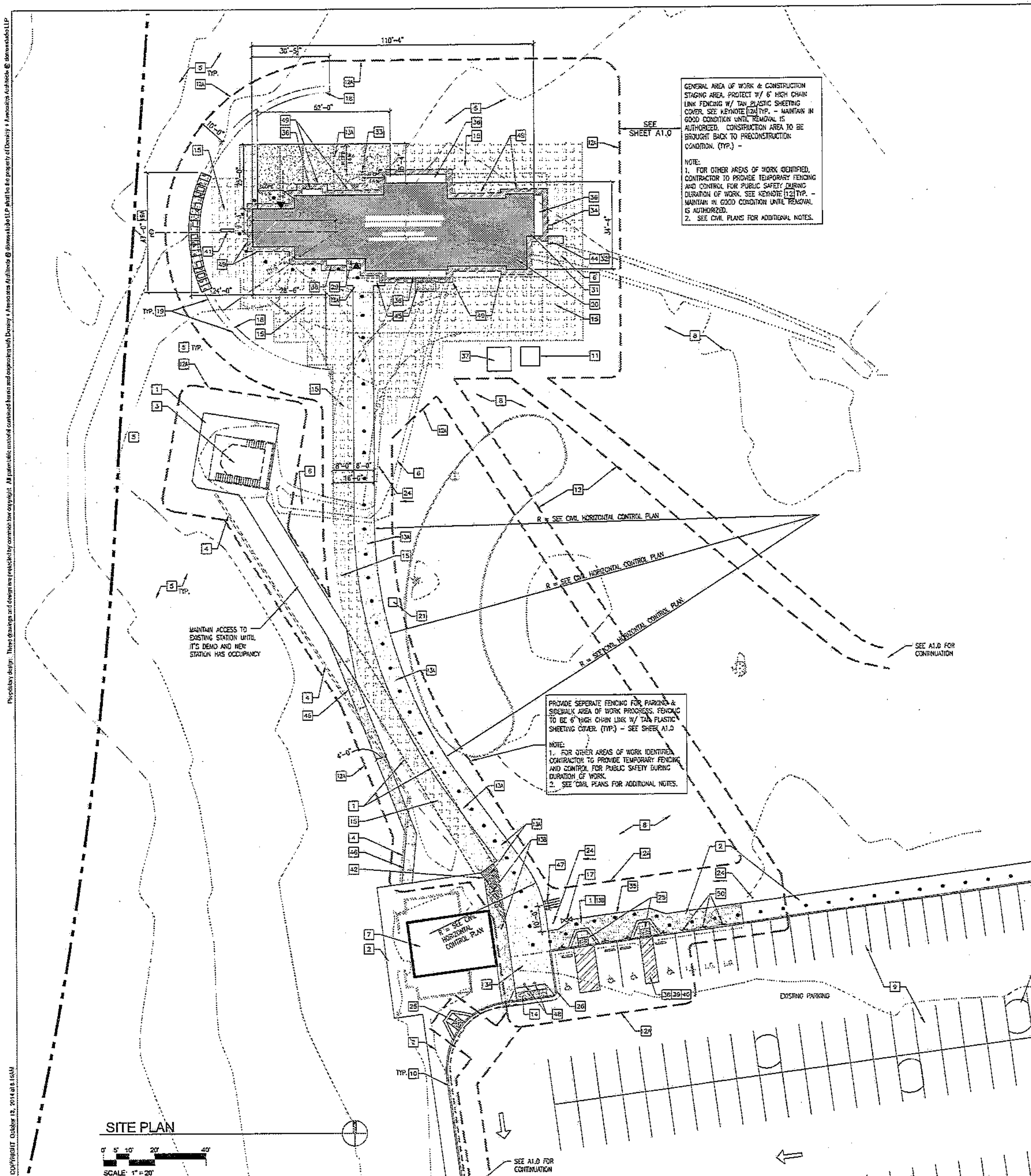

Site Plan Keyed Notes (A0.1 and A0.2)

1. EXISTING CONCRETE WALK TO BE DEMOLISHED. SEE CIVIL PLANS FOR EXTENT OF DEMOLITION AND A1.0 FOR PHASING.
2. EXISTING CONCRETE WALK TO REMAIN.
3. REMAINING EXISTING LIFEGUARD BUILDING AND ELECTRICAL SERVICE TO BE REMOVED AFTER THE NEW LIFEGUARD BUILDING IS COMPLETED AND OPERATIONAL WITH OCCUPANCY. CONTRACTOR TO VERIFY DEMOLITION SEQUENCE. CAP ALL UTILITIES BELOW GRADE AFTER DEMO – TO MUNICIPAL AND FRANCHISE UTILITY STANDARDS. SEE CIVIL AND ELECTRICAL PLANS. RESTORE GRADE AND SAND FINISH TO MATCH EXISTING.
4. EXISTING FENCE RAIL TO BE DEMOLISHED. SEE CIVIL PLANS FOR EXTENT OF DEMOLITION AND A1.0 FOR PHASING.
5. EXISTING RIP RAP NEAR AND AROUND (WITHIN 50' FROM ALL SIDES OF) EXISTING STATION AND NEW STATION EXPOSED DURING GRADING AND / OR DEMO TO BE REMOVED. SEE CIVIL AND SPECIFICATIONS FOR UNIT PRICE PER TON.
6. EXISTING LANDSCAPE BERMS TO BE REMOVED AT LOCATIONS OF SIDEWALK AND EROSION CONTROL MATS. REMAINING DISTURBED EDGES OF LANDSCAPE BERMS TO BE SLOPE BLENDED AND PLANTED TO APPEAR NATURAL AND MATCH EXISTING.
7. EXISTING COMFORT STATION STATION TO REMAIN – NO PROPOSED WORK IN THIS FACILITY
8. EXISTING LAWN AND LANDSCAPING TO REMAIN.
9. EXISTING PARKING LAYOUT AND STRIPING TO BE UNCHANGED.
10. EXISTING RED CURB TO REMAIN. PROVIDE NEW PAINT.
11. TELEPHONE PULL BOX
12. PROVIDE TEMPORARY 6' HIGH CHAIN LINK FENCE W/ TAN SCREEN WHILE WORK IS BEING DONE. – (SEE A1.0)
12A. PROVIDE 6' HIGH CHAIN LINK FENCE W/ TAN SCREEN AT AREA OF WORK. – (SEE A1.0)
13A. CONCRETE FLAT WORK, DRIVE–ON SURFACE PER CIVIL PLANS. MATCH ELEVATION OF NEW CONCRETE TO EXISTING WHERE NECESSARY.
13B. CONCRETE FLAT WORK WALK–ON SURFACE PER CIVIL PLANS. MATCH ELEVATION OF NEW CONCRETE TO EXISTING WHERE NECESSARY
14. DRIVEWAY APPROACH. SEE CIVIL DRAWINGS
15. EROSION CONTROL MAT PER CIVIL DRAWINGS.
16. EXISTING LOCATION OF (4) ACCESSIBLE SPACES TO REMAIN.
17. NEW FIRE HYDRANT PER CIVIL DRAWINGS.
18. BELOW GRADE EROSION BARRIER PER STRUCTURAL AND CIVIL DRAWINGS
19. CONCRETE CAP PER STRUCTURAL DRAWINGS.
19A. CONCRETE CAP "BEACH CASTLES" PUBLIC ART – SEE PA–0.1
20. MAIN SERVICE ELECTRICAL EQUIPMENT SEE ELECTRICAL AND CIVIL DRAWINGS
21. ELECTRICAL TRANSFORMER. SEE ELECTRICAL PLANS. (COORDINATE DEMO W/ EXISTING TOWER DEMO AND INSTALL OF NEW TRANSFORMER OPERATIONAL W/ NEW STATION)
22. FIRE LANE ENTRANCE SIGN. SEE DETAIL 16/A5.2
23. OFF–STREET PARKING SIGN. SEE DETAIL 12/A5.0
24. SITE ACCESSIBILITY SIGN. SEE DETAIL 6/A5.0 (DIRECTIONAL SIGNAGE AS INDICATED BY ARROW)
25. CURB RAMP. SEE CIVIL PLANS AND 19/A5.0 FOR ADDITIONAL INFORMATION.
26. CONCRETE CURB. SEE CIVIL DRAWINGS
27. EXISTING PLANTING AREA TO REMAIN
28. +0'–0" CURB. SEE CIVIL AND LANDSCAPE DRAWINGS
29. KNOX BOX PER FIRE DEPARTMENT REQUIREMENTS. VERIFY LOCATION.
30. EXISTING TRASH AREA TO REMAIN
31. FIRE RISER PER FIRE DEPARTMENT REQUIREMENTS. SEE FIRE PROTECTION PLANS
32. FIRE SERVICE DETECTOR ASSEMBLY, CONCRETE PAD, POST INDICATOR VALVES AND SIGN PER CITY OF SAN DIEGO STANDARD DETAILS AND FIRE DEPARTMENT REQUIREMENTS
33. FLAG POLE PER SPECS WITH BIRD PROOFING ON TOP.
34. WATER SERVICE PRESSURE REDUCING VALVE (PRV) – SEE CIVIL & PLUMBING DWGS.
35. NEW WATER SERVICE & METER –SEE CIVIL DRAWINGS
36. BIOFILTER PLANTER – SEE CIVIL DRAWINGS
37. NEW TRANSFORMER – SEE ELECTRICAL DRAWINGS
38. NEW PARKING STRIPING, TYP. SEE DETAIL 1/A5.0
39. ACCESSIBLY PARKING SPACE. SEE DETAIL 1/A5.0
40. PRECAST WHEEL STOP. SEE DETAIL 1/A5.0
41. CAST IN PLACE CONCRETE WALL W/ BLACK SLATE VENEER – SEE STRUCTURAL DWGS.
42. HATCHED ARREA INDICATES REMOVE AND REPLACE CONCRETE WALK AND CURB – SEE CIVIL DRAWINGS
43. REPLACE EXISTING CRACKED "ZERO" CURB AND CONCRETE PANELS. PROVIDE NEW CONCRETE WALK ADDITION, PER CITY STANDARDS – SEE CIVIL DRAWINGS
44. FIRE SERVICE PER CIVIL DRAWINGS
45. SAND / OIL SEPARATOR PER CIVIL AND PLUMBING DRAWINGS
46. PROVIDE APPROXIMATELY 104 LINEAL FEET OF NEW 4'–0" WIDE (MIN.) TEMPORARY CONCRETE WALK PER CITY STANDARDS – SEE CIVIL DRAWINGS
47. BICYCLE RACK – SEE DETAIL 14/A5.6
48. DEMOUNTABLE POSTS PER CIVIL DRAWINGS
49. INDICATES 2'–0" WIDE CONCRETE CURB AT BUILDING PERIMETER TO CONNECT TO ARMOR FLEX MAT AND BUILDING FOUNDATION – SEE CIVIL DETAIL B/C–4
50. DESIGNATED PARKING STALLS FOR LIFEGUARDS – SEE SIGNAGE DETAIL 13/A5.0

Site Plan Notes

1. SEE CIVIL PLANS FOR: LOCATION AND DETAILS OF HARDSCAPE WALKS AND DRIVEWAYS, RAMPS, HANDRAILS, GUARDRAILS, FREE STANDING PLANTERS & RETAINING WALLS.
2. GRADING PLAN IS PART OF THIS PERMIT. SEE CIVIL PLANS FOR: ALL SITE DIMENSIONS NOT SHOWN ON THIS PLAN, DRAINAGE ELEVATIONS, SITE UTILITIES, CURBS, SITE RETAINING WALLS AND DETAILS. VERIFY ALL DIMENSIONS WITH CIVIL DRAWINGS
3. CONTRACTOR TO VERIFY EXISTING CONDITIONS AND OBTAIN SEPARATE DEMOLITION PERMIT PRIOR TO COMMENCEMENT OF ANY WORK. REMOVE ALL EXISTING WALLS, STRUCTURES, FENCES, A/C OR CONCRETE PAVING, ETC. AS REQUIRED FOR NEW CONSTRUCTION. SEE SHEET A1.0 AND CIVIL PLAN FOR ADDITIONAL INFORMATION
4. CONTRACTOR TO CONFIRM ALL UTILITY LOCATIONS PRIOR TO GRADING
5. NEAREST BUS STOP IS LOCATED APPROX. (1) MILE AWAY, LOCATED AT THE CORNER OF MISSION BLVD. AND MISSION BAY DRIVE.
6. PROPOSED STATION TO CONNECT TO EXISTING UTILITIES
7. CONTRACTOR TO POTHOLE EXISTING SEWER LINE AT NEW LATERAL TO CONFIRM I.E. 8.31"
8. PROPOSED PRIVATE UNDERGROUND SEWER FACILITIES LOCATED WITHIN A SINGLE LOT SHALL BE DESIGNED TO MEET THE REQUIREMENTS OF THE CALIFORNIA UNIFORM PLUMBING CODE AND SHALL BE REVIEWED AS PART OF THE BUILDING PERMIT PLAN CHECK.
9. ALL NEW ON SITE UTILITIES SHALL BE PLACED UNDERGROUND U.N.O. ON THIS PLAN. SEE CIVIL PLANS
10. STREET ADDRESS SHALL BE LOCATED IN ACCORDANCE WITH THE MUNICIPAL CODE. SEE EXTERIOR ELEVATIONS FOR LOCATIONS
11. ALL PROPERTY LINES, BUILDINGS, BOTH EXISTING AND PROPOSED ARE SHOWN ON THIS SITE PLAN SHEET A0.1.
12. HEIGHT CERTIFICATION IS REQUIRED PRIOR TO FRAMING INSPECTION APPROVAL
13. SURFACE WATER WILL DRAIN AWAY FROM BUILDING. SEE CIVIL DRAWINGS
14. POST INDICATOR VALVES, FIRE DEPARTMENT CONNECTIONS, AND ALARM BELL ARE TO BE LOCATED ON THE ADDRESS/ACCESS SIDE OF THE STRUCTURE. UFC 1001.4
15. FIRE ACCESS LANE TO BE DESIGNED FOR WEIGHT OF 95,000 LBS.

Symbols

- SYMBOL INDICATES ACCESSIBLE BUILDING ENTRANCES
- SYMBOL INDICATES ACCESSIBLE ROUTE TO PUBLIC WAY – (MAX. SLOPE – 5% ; CROSS SLOPE – 1.5% ; SLIP RESISTANT TO BE XXXXX OR BETTER AT ALL NEW SURFACES ALONG PATH)
- INDICATES FIRE LANE & RED CURB. CURBS TO BE PAINTED RED W/ WHITE LETTERS, "NO PARKING FIRE LANE" AT A MAXIMUM OF 30 FEET ON CENTER PER CITY OR FIRE DEPT. STANDARDS. PROVIDE FIRE SIGNS AS REQUIRED (SEE KEYNOTE #10)
- CONCRETE FLAT WORK PER CIVIL PLANS
- ERROSION CONTROL MAT PER CIVIL PLANS AND SPEC.
- INDICATES LIMITS OF WORK & CONSTRUCTION FENCING
- INDICATES EXTENT OF ARMORFLEX CONCRETE MATTRESS AROUND BUILDING PERIMITER

A-2

Dominy + Associates Architects @ domusstudio
2150 West Washington, Suite 303
San Diego, California 92110
Tel 619.692.9393
Fax 619.692.9394
domusstudio.com

SPEC. NO. 8147

LICENSED ARCHITECT WAYNE HOLTAN No. C12113 REN 5.30.15 STATE OF CALIFORNIA

PLANS FOR THE CONSTRUCTION OF
South Mission Beach Lifeguard Station

Site Plan (Enlarged) A0.2

CITY OF SAN DIEGO, CALIFORNIA
ENGINEERING & CAPITAL PROJECTS
ARCHITECTURAL ENGINEERING & CONTRACTS DIVISION
SHEET 20 OF 94 SHEETS
APPROVED: FOR CITY ENGINEER — DATE 10/13/2014

WBS S-00791
SUBMITTED BY: JIHAD SLEIMAN, PROJECT MANAGER
YOUSIF BENYAMIN, PROJECT ENGINEER
218-1693 CCS27 COORDINATES
1858-6253 CCS83 COORDINATES

DESCRIPTION	BY	APPROVED	DATE	FILMED
ORIGINAL	WH/TT			

CONTRACTOR ______ DATE STARTED ______
INSPECTOR ______ DATE COMPLETED ______

32849–20–D

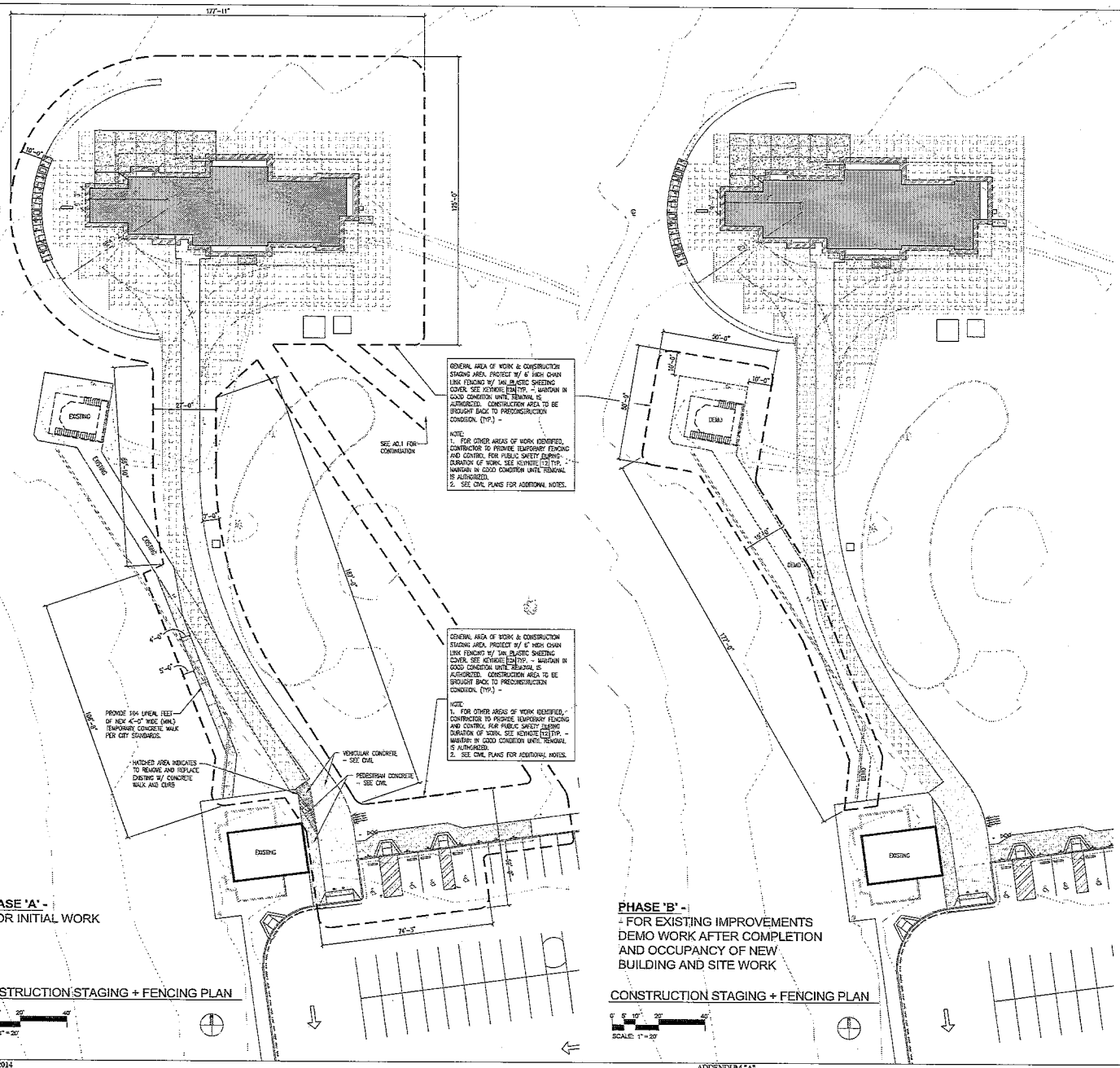

South Mission Beach Lifeguard Station
700 N. Jetty Road

A-3

Dowdey-Anderson Architects & Associates
2150 West Washington, Suite 202
San Diego, California 92110
Tel 619.692.9200
Fax 619.692.9296
dowdey.com

SPEC. NO. 81:47

LICENSED ARCHITECT
JOANNE HOPPIN
No. C21137
REN 9.30.15
STATE OF CALIFORNIA

PLANS FOR THE CONSTRUCTION OF
South Mission Beach Lifeguard Station

Construction Staging + Fencing Plan | A1.0

CITY OF SAN DIEGO, CALIFORNIA
ENGINEERING & CAPITAL PROJECTS
ARCHITECTURAL ENGINEERING & CONTRACTS DIVISION
SHEET 21 OF 24 SHEETS

WBS S-00791

APPROVED: FOR CITY ENGINEER — DATE: 10/13/2014

SUBMITTED BY: JOHN SLEEMAN, PROJECT MANAGER

DESCRIPTION	BY	APPROVED	DATE	FILED
ORIGINAL	YM/TT			

YOUSIF BENYAMIN
PROJECT ENGINEER
210-1653
DESIGN COORDINATES
1858-6253
CCS83 COORDINATES

CONTRACTOR INSPECTOR — DATE STARTED — DATE COMPLETED

32849-21-D

Property/design: These drawings and designs are protected by common law copyright. All proprietary and/or confidential information and designs including but not limited to those contained in or regarding this Drawing are the property of Dowdey-Anderson Architects & Associates (DA) and/or its licensors. DA and/or its licensors shall retain all rights, title and interest in and to the Drawing and all proprietary and/or confidential information and designs including but not limited to those contained in or regarding this Drawing. Any use of the Drawing without the express written consent of DA is prohibited. Any unauthorized use of the Drawing shall be at the user's sole risk and without liability to DA and/or its licensors. Any unauthorized use of the Drawing shall entitle DA and/or its licensors to all remedies available at law or in equity, including but not limited to injunctive relief and monetary damages.
© COPYRIGHT October 15, 2014 DA SDAA

South Mission Beach Lifeguard Station
700 N. Jetty Road

General Notes

1. COMPLETE PLANS AND SPECIFICATIONS FOR ALL FIRE EXTINGUISHING SYSTEMS, INCLUDING AUTOMATIC SPRINKLER AND STANDPIPE SYSTEMS AND OTHER SPECIAL FIRE EXTINGUISHING SYSTEMS AND RELATED APPURTENANCES SHALL BE SUBMITTED TO THE CITY OF SAN DIEGO FOR REVIEW AND APPROVAL PRIOR TO INSTALLATION.
2. COMPLETE PLANS AND SPECIFICATIONS FOR ALL FIRE ALARM SYSTEMS SHALL BE SUBMITTED TO THE CITY OF SAN DIEGO DEVELOPMENT SERVICES FOR REVIEW AND APPROVAL PRIOR TO INSTALLATION.

Occupant Loads

ROOM NO.	ROOM NAME	AREA	OCCUPANCY	OCCUPANT LOAD FACTOR	OCCUPANT LOAD	EXITS NEEDED
101	FIRST AID ROOM	269 SF	B	100	3	1
102	RECEP.	248 SF	B	100	3	1
103	LOCKER ROOM #1	250 SF	B	50	5	1
104	LOCKER ROOM #2	250 SF	B	50	5	1
105	RESCUE VEHICLES	627 SF	S2	200	4	1
106	UTILITY #1	126 SF	B	300	1	1
107	UTILITY #2	146 SF	B	300	1	1
108	EQUIP./JAN. RM.	29 SF	B	300	1	1
109	ELECT. RM.	75 SF	B	300	1	1
110	STAIR #1	63 SF	ACCESSORY	00	-	1
112	RESTROOM	52 SF	ACCESSORY	00	-	1
113	STORAGE	75 SF	B	300	1	1
114	BOARD & BUOY STORAGE	166 SF	B	300	1	1
115	TELCOM. RM.	37 SF	B	300	1	1
	TOTAL	2,413 SF			27	1

Floor Plan Keyed Notes

1 BUILT-IN CABINETRY. SEE INTERIOR ELEVATIONS & FINISH SCHEDULE
2 LINE OF CEILING / ROOF / TRELLIS ABOVE
3 STEEL PIPE COLUMN PER STRUCT. DWG'S. - PAINTED
4 HOSE BIB. RECESSED IN WALL, TYP. SEE PLUMBING DWG'S.
5 CONCRETE SLAB. FINISH PER FINISH SCHEDULE
6A "EXIT" TACTILE SIGN - SEE DETAIL 10/A5.0
6B "EXIT STAIR DOWN" TACTILE SIGN
7 ELECTRIC WASHER & DRYER. SEE PLUMBING DWG'S & SPECS.
8 LINE OF OVERHEAD DOORS IN OPEN POSITION.
9 FLOOR DRAIN. SEE PLUMBING DWG'S. & DETAIL 15/A5.2 SIM.
10 CANTED GLAZING PER ELEVATION AND WINDOW SCHEDULE
11 WALL MOUNTED UTILITY SINK PER PLUMBING DWG'S.
12 METAL STAIRS. SEE ENLARGED PLAN A4.1 & STAIR PLAN A4.2
13 EXTERIOR GUARDRAIL AT (3RD FLOOR). SEE DETAIL 6, 9, 13/A5.2
14 FIRE EXTINGUISHER LOCATION: FOR MOUNT, REFER TO SPECS. FOR F.E., ALSO SEE DETAIL 2/A5.4 FOR RECESS MOUNTED (PER PLAN)
15 FLOOR DRAIN PER DETAIL 19/A5.1
16 MOP SINK. SEE PLUMBING DWG'S AND SPECS.
17 SLIDE-IN ELECTRIC RANGE WITH MICROWAVE / TYPE II EXHAUST HOOD COMBINATION (400 CFM) ABOVE. SEE SPECS. & INSTALL PER MANUFACTURER'S INSTRUCTIONS.
18 SEAMLESS STAINLESS STEEL SINK PER SPEC. HOOK-UP PER PER PLUMBING PLANS. ALSO SEE DETAIL 18/A5.5
19 UNDER COUNTER DISHWASHER PER SPECIFICATIONS. VERIFY DISHWASHER CLEARANCES. SEE INTERIOR ELEVATIONS.
20 REFRIGERATOR SPACE. PROVIDE WATER & POWER.
21 MICROWAVE OVEN SEE SPECS. & ELECTRICAL DWG'S
22 GARBAGE DISPOSAL UNDERSINK. PROVIDE POWER & SWITCH @ COUNTER. SEE ELECTRICAL AND PLUMBING PLANS
23 EXHAUST HOOD (TYPE II) - SEE MECHANICAL DWGS.
24 INDIVIDUAL GARAGE DOOR OPERATOR CONTROL SWITCH
25 HVAC SHAFT. SEE MECH. PLANS
26 MECHANICAL EQUIPMENT, SEE MECHANICAL DRAWINGS & DETAIL 17/A5.1
27 ROOF ACCESS ABOVE. SEE REFLECTED CEILING PLAN AND DETAIL 13/A5.1
28 SPLASH BLOCK PER DETAIL 1/A5.2
29 ACCESSIBLE LOCKER (1-TIER) w/ RECESS HANDLE W/ LIFTING TRIGGER HARDWARE - SEE INTERIOR ELEVATIONS & DETAIL 19/A5.0
30 ROOF BELOW.
31 BUILDING ENTRANCE ACCESSIBLE SIGN PER DETAIL 7/A5.0
32 DOOR THRESHOLD ON HIGH CURB - SEE DETAIL 17/A5.3
33 ADJUSTABLE SHELVES, PER INTERIOR ELEVATIONS & SPECS.
34 RECESSED KNOX BOX, PER FIRE AUTHORITY
35 FIRE RISER - SEE CIVIL & PLUMBING FOR CONTINUATION. PROVIDE STAINLESS STEEL CAGE ON TWO SIDES TO ENCLOSE FIRE RISER FULL HEIGHT.
36 FREE STANDING CONCRETE WALL. 12"X18" BLACK SLATE VENEER
37 RECEPTION DESK - SEE DETAIL 15/A5.5
38 MEDICAL PAC PROVIDED BY OWNER HANGING SYSTEM PROVIDED AND INSTALLED BY CONTRACTOR.
39 MASTER GARAGE DOOR CONTROL PANEL
40 RESCUE GURNEY BED PER SPECS
41 PROVIDE (12) GALV. J-HOOKS FOR HANGING BUOYS - REFER TO OWNER FOR LAYOUT
42 SWIM FINS RACK - HORIZ. PIPE BARS, MOUNT TO CONC. WALL SEE 2/A4.3 & 5/A5.7
43 READY ROOM COUNTER TOP PER DETAIL 2/A5.5
44 OBSERVATION ROOM COUNTER TOP PER DETAIL 1/A5.5
45 ACCESSIBLE CONCRETE SEAT AT FOOTWASH AND FIRST AID - SEE DETAIL 17/A5.2
46 REMOVABLE BOLLARD - SEE DETAIL 18/A5.0
47 INDICATES 2'-0" WIDE CONCRETE CURB AT BUILDING PERIMETER TO CONNECT TO ARMOR FLEX MAT AND BUILDING FOUNDATION - SEE CIVIL DETAIL 8/C-4
48 PAINT EDGE METAL AT THIS RAISED AREA ONLY
49 WET SUIT HANGING RACK
50 CENTRIFUGAL DRYER BY OWNER
51 MECHANICAL LOUVER - SEE 2/A5.2 & MECH. DWGS.
52 ROOF DRAIN OVERFLOW OUTLET - SEE DETAIL 20/A5.1
53 LINE OF WALL BELOW
54 FLOW-THROUGH PLANTER: BIO-RETENTION SOIL OVER 6" GRAVEL BED W/ PEFORATED PIPE - DISCHARGE THROUGH WEEP HOLES - SEE CIVIL DRAWINGS
55 WATER SERVICE PRESSURE REDUCING VALVE (PRV)
56 FIRE SERVICE DETECTOR ASSEMBLY
57 6" EXHAUST PIPE PER MECHANICAL DWGS.
58 ICE MACHINE PER SPEC.
59 STAINLESS STEEL CORNER GUARD PER SPEC - SEE DETAIL 5/A5.4
60 ACCESSIBLE SHOWER STALL - SEE DETAIL 12/A5.6
61 NON-ACCESSIBLE SHOWER STALL - SEE DETAIL 12/A5.5 & 16/A5.6
62 TRANSLUCENT RESIN PANEL 'CROSS' SEE DETAIL 10/A5.2
63 WALL RACK FOR RESCUE BOARDS, SEE DETAIL 2/A5.7
64 12" HIGH WOOD FRAMED PLATFORM - SEE DETAIL 8 & 12/A5.7
65 1-GALLON PLANTS [MUHLENBERGIA RIGENS (DEER GRASS)] AT FLOW-THROUGH STORMWATER PLANTERS (NON-IRRIGATED)

Floor Plan Notes

1. SYMBOL WX INDICATES WALL TYPE. SEE SHEET A6.2 FOR WALL ASSEMBLY INFO.
2. DIMENSIONS ARE TO FACE OF CONCRETE OR FACE OF BLOCK UNLESS NOTED OTHERWISE.
3. TYPICAL EXTERIOR WALL ASSEMBLY W1 UNLESS NOTED OTHERWISE ON ARCHITECTURAL OR STRUCTURAL PLANS.
4. TYPICAL INTERIOR WALL ASSEMBLY W1 OR W2 UNLESS NOTED OTHERWISE ON ARCHITECTURAL OR STRUCTURAL PLANS.
5. PROVIDE APPROPRIATE WALL DEPTH WHERE ANY EQUIPMENT IS TO BE RECESSED IN WALL.
6. METAL STUD WALLS AT NON-BEARING, NON-SHEAR WALL LOCATIONS. SEE ASSEMBLY NOTES ON SHT. A6.2
7. SLOPE FLOORS TO DRAINS AS SHOWN ON ARCHITECTURAL FLOOR PLANS, PLUMBING PLANS.
8. WHERE ADDITIONAL DOOR ARE INSTALLED FOR EGRESS PURPOSES, THEY SHALL CONFORM TO ALL REQUIRMENTS OF CHAPTER 10, CBC SEC. 1003.3.1.1
9. FOR TIE ROD SPACING & CORNER LAYOUT OF CAST-IN-PLACE CONCRETE SEE DETAILS 8&12 A5.2.

SYMBOLS

ISA = INTERNATIONAL SYMBOL OF ACCESSIBILITY - SEE DETAIL 7/A5.0
FE = FIRE EXTINGUISHER - SEE DETAIL 2/A5.4

Wall Legend

CAST IN PLACE CONCRETE WALLS - SEE STRUCTURAL DRAWINGS
MASONRY WALLS - SEE STRUCTURAL DRAWINGS
STUD WALLS - SEE STRUCTURAL DRAWINGS
2-HR FIRE RATED WALL - ASSEMBLY W2 U.O.N. - SEE A6.2
1-HR FIRE RATED WALL - ASSEMBLY W5 U.O.N. - SEE A6.2

NOTE: FOR RATED PENETRATION DETAILS - SEE DETAIL 20/A5.5

INDICATES 2'-0" WIDE CONCRETE CURB AT BUILDING PERIMETER TO CONNECT TO ARMOR FLEX MAT AND BUILDING FOUNDATION - SEE CIVIL DETAIL 8/C-4

(X) DOOR NUMBER: SEE DOOR SCHEDULE A6.0
(X) WINDOW TYPE: SEE WINDOW SCHEDULE A6.1

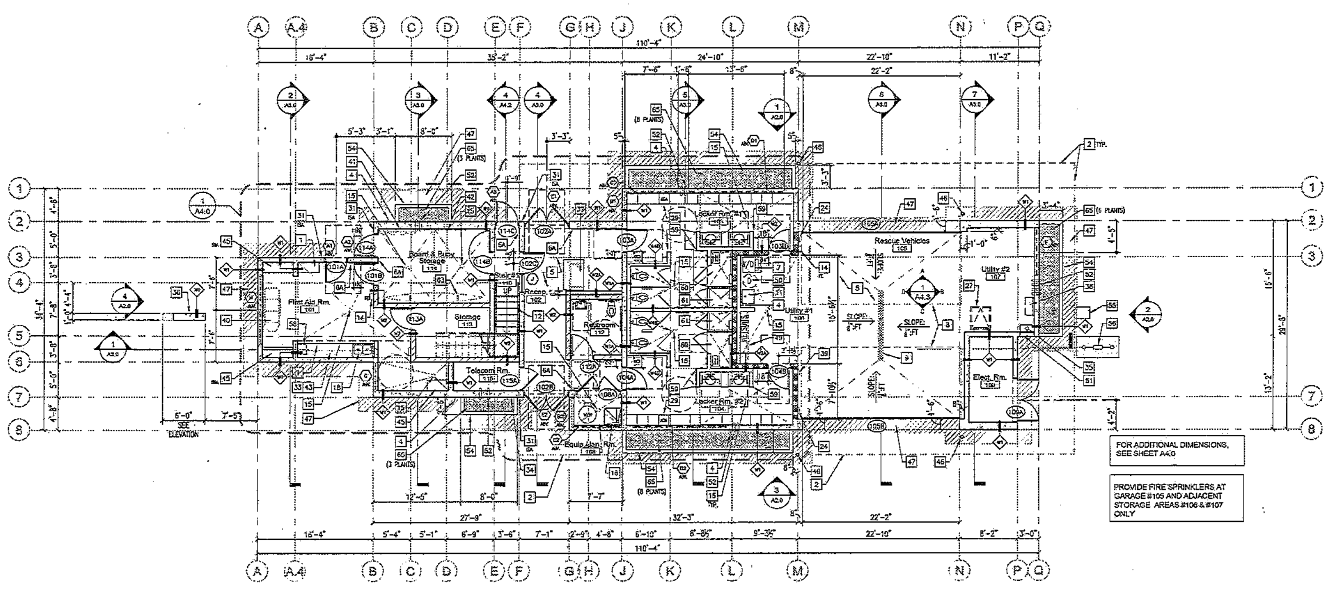

FIRST FLOOR PLAN

F.F. = +12.00' MSL

A-4

Dominy + Associates Architects @ domusstudio
2150 West Washington, Suite 303
San Diego, California 92110
Tel 619.692.9393
Fax 619.692.9394
domusstudio.com

SPEC. NO. 8147

PLANS FOR THE CONSTRUCTION OF
South Mission Beach Lifeguard Station

First Floor Plan | A1.1

CITY OF SAN DIEGO, CALIFORNIA
ENGINEERING & CAPITAL PROJECTS
ARCHITECTURAL ENGINEERING & CONTRACTS DIVISION
SHEET 22 OF 94 SHEETS

WBS S-00791

APPROVED: FOR CITY ENGINEER — DATE 10/13/2014

SUBMITTED BY: JIHAD SLEIMAN, PROJECT MANAGER

DESCRIPTION	BY	APPROVED	DATE	FILMED
ORIGINAL	WH/TT			

YOUSIF BONYAMIN — PROJECT ENGINEER
278-1693 — CCS27 COORDINATES
1856-6253 — CCS83 COORDINATES

CONTRACTOR ____ DATE STARTED ____
INSPECTOR ____ DATE COMPLETED ____

32849-22-D

Proprietary design. These drawings and design are protected by common law copyright. All patentable material contained herein and originating with Dominy + Associates Architects @ domusstudio LLP shall be the property of Dominy + Associates Architects @ domusstudio LLP
© COPYRIGHT October 13, 2014 at 7:04AM

General Notes

1. COMPLETE PLANS AND SPECIFICATIONS FOR ALL FIRE EXTINGUISHING SYSTEMS, INCLUDING AUTOMATIC SPRINKLER AND STANDPIPE SYSTEMS AND OTHER SPECIAL FIRE EXTINGUISHING SYSTEMS AND RELATED APPURTENANCES SHALL BE SUBMITTED TO THE CITY OF SAN DIEGO FOR REVIEW AND APPROVAL PRIOR TO INSTALLATION.
2. COMPLETE PLANS AND SPECIFICATIONS FOR ALL FIRE ALARM SYSTEMS SHALL BE SUBMITTED TO THE CITY OF SAN DIEGO DEVELOPMENT SERVICES FOR REVIEW AND APPROVAL PRIOR TO INSTALLATION.

Floor Plan Keyed Notes

- [1] BUILT-IN CABINETRY. SEE INTERIOR ELEVATIONS & FINISH SCHEDULE
- [2] LINE OF CEILING / ROOF / TRELLIS ABOVE.
- [3] STEEL PIPE COLUMN PER STRUCT. DWG'S. - PAINTED
- [4] HOSE BIB. RECESSED IN WALL, TYP. SEE PLUMBING DWG'S.
- [5] CONCRETE SLAB. FINISH PER FINISH SCHEDULE
- [6A] "EXIT" TACTILE SIGN - SEE DETAIL 10/A5.0
- [6B] "EXIT STAIR DOWN" TACTILE SIGN
- [7] ELECTRIC WASHER & DRYER. SEE PLUMBING DWG'S & SPECS.
- [8] LINE OF OVERHEAD DOORS IN OPEN POSITION.
- [9] FLOOR DRAIN. SEE PLUMBING DWG'S. & DETAIL 15/A5.2 SIM.
- [10] CANTED GLAZING PER ELEVATION AND WINDOW SCHEDULE
- [11] WALL MOUNTED UTILITY SINK PER PLUMBING DWG'S.
- [12] METAL STAIRS. SEE ENLARGED PLAN A4.1 & STAIR PLAN A4.2
- [13] EXTERIOR GUARDRAIL AT (3RD FLOOR). SEE DETAIL 6, 9, 13/A5.2
- [14] FIRE EXTINGUISHER LOCATION: FOR MOUNT, REFER TO SPECS. FOR F.E. ALSO SEE DETAIL 2/A5.4 FOR RECESS MOUNTED (PER PLAN)
- [15] FLOOR DRAIN PER DETAIL 19/A5.1
- [16] MOP SINK. SEE PLUMBING DWG'S AND SPECS.
- [17] SLIDE-IN ELECTRIC RANGE WITH MICROWAVE / TYPE II EXHAUST HOOD COMBINATION (400 CFM) ABOVE. SEE SPECS. & INSTALL PER MANUFACTURER'S INSTRUCTIONS.
- [18] SEAMLESS STAINLESS STEEL SINK PER SPEC. HOOK-UP PER PER PLUMBING PLANS. ALSO SEE DETAIL 18/A5.5
- [19] UNDER COUNTER DISHWASHER PER SPECIFICATIONS. VERIFY DISHWASHER CLEARANCES. SEE INTERIOR ELEVATIONS.
- [20] REFRIGERATOR SPACE. PROVIDE WATER & POWER.
- [21] MICROWAVE OVEN SEE SPECS. & ELECTRICAL DWG'S.
- [22] GARBAGE DISPOSAL UNDERSINK. PROVIDE POWER & SWITCH @ COUNTER. SEE ELECTRICAL AND PLUMBING PLANS
- [23] EXHAUST HOOD (TYPE II) - SEE MECHANICAL DWGS.
- [24] INDIVIDUAL GARAGE DOOR OPERATOR CONTROL SWITCH
- [25] HVAC SHAFT. SEE MECH. PLANS
- [26] MECHANICAL EQUIPMENT, SEE MECHANICAL DRAWINGS & DETAIL 17/A5.1
- [27] ROOF ACCESS ABOVE. SEE REFLECTED CEILING PLAN AND DETAIL 13/A5.1
- [28] SPLASH BLOCK PER DETAIL 1/A5.2
- [29] ACCESSIBLE LOCKER (1-TIER) w/ RECESS HANDLE W/ LIFTING TRIGGER HARDWARE - SEE INTERIOR ELEVATIONS & DETAIL 19/A5.0
- [30] ROOF BELOW.
- [31] BUILDING ENTRANCE ACCESSIBLE SIGN PER DETAIL 7/A5.0
- [32] DOOR THRESHOLD ON HIGH CURB - SEE DETAIL 17/A5.3
- [33] ADJUSTABLE SHELVES, PER INTERIOR ELEVATIONS & SPECS.
- [34] RECESSED KNOX BOX, PER FIRE AUTHORITY
- [35] FIRE RISER - SEE CIVIL & PLUMBING FOR CONTINUATION. PROVIDE STAINLESS STEEL CAGE ON TWO SIDES TO ENCLOSE FIRE RISER FULL HEIGHT.
- [36] FREE STANDING CONCRETE WALL. 12"X18" BLACK SLATE VENEER
- [37] RECEPTION DESK - SEE DETAIL 15/A5.5
- [38] MEDICAL PAC PROVIDED BY OWNER HANGING SYSTEM PROVIDED AND INSTALLED BY CONTRACTOR.
- [39] MASTER GARAGE DOOR CONTROL PANEL
- [40] RESCUE GURNEY BED PER SPECS
- [41] PROVIDE (12) GALV J-HOOKS FOR HANGING BUOYS - REFER TO OWNER FOR LAYOUT
- [42] SWIM FINS RACK - HORIZ. PIPE BARS, MOUNT TO CONC. WALL SEE 2/A4.3 & 5/A5.7
- [43] READY ROOM COUNTER TOP PER DETAIL 2/A5.5
- [44] OBSERVATION ROOM COUNTER TOP PER DETAIL 1/A5.5
- [45] ACCESSIBLE CONCRETE SEAT AT FOOTWASH AND FIRST AID - SEE DETAIL 17/A5.2
- [46] REMOVABLE BOLLARD - SEE DETAIL 16/A5.0
- [47] INDICATES 2'-0" WIDE CONCRETE CURB AT BUILDING PERIMETER TO CONNECT TO ARMOR FLEX MAT AND BUILDING FOUNDATION - SEE CIVIL DETAIL B/C-4
- [48] PAINT EDGE METAL AT THIS RAISED AREA ONLY
- [49] WET SUIT HANGING RACK
- [50] CENTRIFUGAL DRYER BY OWNER
- [51] MECHANICAL LOUVER - SEE 2/A5.2 & MECH. DWGS.
- [52] ROOF DRAIN OVERFLOW OUTLET - SEE DETAIL 20/A5.1
- [53] LINE OF WALL BELOW
- [54] FLOW-THROUGH PLANTER: BIO-RETENTION SOIL OVER 6" GRAVEL BED W/ PEFORATED PIPE - DISCHARGE THROUGH WEEP HOLES - SEE CIVIL DRAWINGS
- [55] WATER SERVICE PRESSURE REDUCING VALVE (PRV)
- [56] FIRE SERVICE DETECTOR ASSEMBLY
- [57] 6" EXHAUST PIPE PER MECHANICAL DWGS.
- [58] ICE MACHINE PER SPEC.
- [59] STAINLESS STEEL CORNER GUARD PER SPEC - SEE DETAIL 5/A5.4
- [60] ACCESSIBLE SHOWER STALL - SEE DETAIL 12/A5.6
- [61] NON-ACCESSIBLE SHOWER STALL - SEE DETAIL 12/A5.5 & 16/A5.6
- [62] TRANSLUCENT RESIN PANEL 'CROSS' SEE DETAIL 10/A5.2
- [63] WALL RACK FOR RESCUE BOARDS. SEE DETAIL 2/A5.7
- [64] 12" HIGH WOOD FRAMED PLATFORM - SEE DETAIL 8 & 12/A5.7
- [65] 1-GALLON PLANTS [MUHLENBERGIA RIGENS (DEER GRASS)] AT FLOW-THROUGH STORMWATER PLANTERS (NON-IRRIGATED)

Occupant Loads

ROOM NO.	ROOM NAME	AREA	OCCUPANCY	OCCUPANT LOAD FACTOR	OCCUPANT LOAD	EXITS NEEDED
200	READY RM.	195 SF	B	100	2	1
201	RESTROOM	46 SF	ACCESSORY	00	-	1
202	ADMIN.	77 SF	B	100	1	1
203	STORAGE	11 SF	B	300	1	1
204	STAIR #2	56 SF	ACCESSORY	00	-	1
	TOTAL	385 SF			4	1

(FROM LEVEL ABOVE) —

301	OBSERVATION LEVEL	125 SF	B	100	2	1
	TOTAL	125 SF			2	1

Floor Plan Notes

1. SYMBOL (WX) INDICATES WALL TYPE, SEE SHEET A6.2 FOR WALL ASSEMBLY INFO
2. DIMENSIONS ARE TO FACE OF CONCRETE OR FACE OF BLOCK UNLESS NOTED OTHERWISE.
3. TYPICAL EXTERIOR WALL ASSEMBLY (W1) UNLESS NOTED OTHERWISE ON ARCHITECTURAL OR STRUCTURAL PLANS.
4. TYPICAL INTERIOR WALL ASSEMBLY (W1) OR (W2) UNLESS NOTED OTHERWISE ON ARCHITECTURAL OR STRUCTURAL PLANS.
5. PROVIDE APPROPRIATE WALL DEPTH WHERE ANY EQUIPMENT IS TO BE RECESSED IN WALL.
6. METAL STUD WALLS AT NON-BEARING, NON-SHEAR WALL LOCATIONS. SEE ASSEMBLY NOTES ON SHT. A6.2
7. SLOPE FLOORS TO DRAINS AS SHOWN ON ARCHITECTURAL FLOOR PLANS, PLUMBING PLANS.
8. WHERE ADDITIONAL DOOR ARE INSTALLED FOR EGRESS PURPOSES, THEY SHALL CONFORM TO ALL REQUIRMENTS OF CHAPTER 10, CBC SEC. 1003.3.1.1
9. FOR TIE ROD SPACING & CORNER LAYOUT OF CAST-IN-PLACE CONCRETE SEE DETAILS 8&12 A5.2.

SYMBOLS

ISA = INTERNATIONAL SYMBOL OF ACCESSIBILITY - SEE DETAIL 7/A5.0
FE = FIRE EXTINGUISHER - SEE DETAIL 2/A5.4

Wall Legend

- CAST IN PLACE CONCRETE WALLS - SEE STRUCTURAL DRAWINGS
- MASONRY WALLS - SEE STRUCTURAL DRAWINGS
- STUD WALLS - SEE STRUCTURAL DRAWINGS
- 2-HR FIRE RATED WALL - ASSEMBLY (W2) U.O.N. - SEE A6.2
- 1-HR FIRE RATED WALL - ASSEMBLY (W5) U.O.N. - SEE A6.2

NOTE: FOR RATED PENETRATION DETAILS - SEE DETAIL 20/A5.5

- INDICATES 2'-0" WIDE CONCRETE CURB AT BUILDING PERIMETER TO CONNECT TO ARMOR FLEX MAT AND BUILDING FOUNDATION - SEE CIVIL DETAIL B/C-4
- (X) DOOR NUMBER: SEE DOOR SCHEDULE A6.0
- (X) WINDOW TYPE: SEE WINDOW SCHEDULE A6.1

Roof Plan Keyed Notes

- [R1A] LOW SLOPE ROOF MEMBRANE PER (SPECS) W/ TAPERED INSULATION - (ROOF TYPE 'R1A' ON SHEET A6.2). 1/4" PER FOOT MIN. SLOPE - FOR ROOF DETAILS SEE SHEET A5.1, FOR TAPERED INSULATION LAYOUT SEE 8/A5.1
- [R1] LOW SLOPE ROOF MEMBRANE PER (SPECS) W/ TAPERED INSULATION & INSULATION BLANKET - (ROOF TYPE 'R1' ON SHEET A6.2). 1/4" PER FOOT MIN. SLOPE - FOR ROOF DETAILS SEE SHEET A5.1, FOR TAPERED INSULATION LAYOUT SEE 8/A5.1
- [2R] CRICKET - SEE DETAIL 5 & 10/A5.1 & ROOF PLAN NOTES BELOW.
- [3R] LINE OF WALL BELOW
- [4R] MECHANICAL EQUIPMENT, SEE MECHANICAL DRAWINGS
- [5R] VENT PIPE / INTAKE / EXHAUST, PER M.E.P. DRAWINGS HVAC EQUIPMENT - SEE DETAIL 15/A5.1
- [6R] ROOF HATCH, SEE DETAIL 13/A5.1
- [7R] THRU-WALL SCUPPER, SEE DETAIL 12/A5.1
- [8R] ROOF DRAIN AND ROOF OVERFLOW DRAIN, SEE DETAIL 6/A5.1
- [9R] BIRD WIRE PER SPECS - LOCATE AT 4'-0" O.C.
- [10R] PARAPET SLOPE AT 45° - SEE DETAIL 18/A5.1

Roof Plan Notes

1. ALL ROOF CONSTRUCTION SHOWN ON THIS SHEET IS ROOF ASSEMBLY (R1) (R2) U.N.O. SEE SHEET A6.2 FOR ROOF CLASSIFICATION SCHEDULE.
2. HEIGHT INDICATED ON THIS PLAN ARE TO TOP OF ROOF DECK UNLESS NOTED OTHERWISE. HEIGHTS ARE MEASURED FROM TOP OF MAIN FLOOR CONCRETE SLAB. (0'-0")
3. MINIMUM ROOF SLOPES, INCLUDING CRICKETS, TO BE 3/8" PER FOOT U.N.O. MINIMUM SLOPE AT CROSS FALLS TO BE 1/4" PER FOOT.
4. DS : DOWN SPOUT
   RD : ROOF DRAIN
   OF : OVERFLOW
   T.O.P. : TOP OF PARAPET
   T.O. PLY : TOP OF PLYWOOD
5. DOWN SPOUTS, ROOF DRAINS AND OVERFLOWS TO RUN OUTSIDE WALL, UNLESS NOTED OTHERWISE. SEE PLUMBING PLANS FOR CONTINUATION.
6. OVERFLOW DRAINS SHALL DISCHARGE TO AN APPROVED LOCATION AND SHALL NOT BE CONNECTED TO ROOF DRAIN LINES (C.E.C. 1506)
7. REQUIRED ROOF : MINIMUM OF CLASS A PER UBC TABLE 15-A
8. PLUMBING VENTS TO BE GANGED TO MINIMIZE ROOF PENETRATIONS.
9. SUPPLY AND INSTALL GALVANIZED SHEET METAL ROOF JACKS FOR VENTING. VENTS SHALL BE GANGED TOGETHER AND ROUTED TO BACKSIDE OF ROOF TO PENETRATE ROOF AS DIRECTED BY ARCHITECT. (MIN. 18" FROM FASCIA & 18" MIN. FROM RIDGES).

South Mission Beach Lifeguard Station
San Diego, California

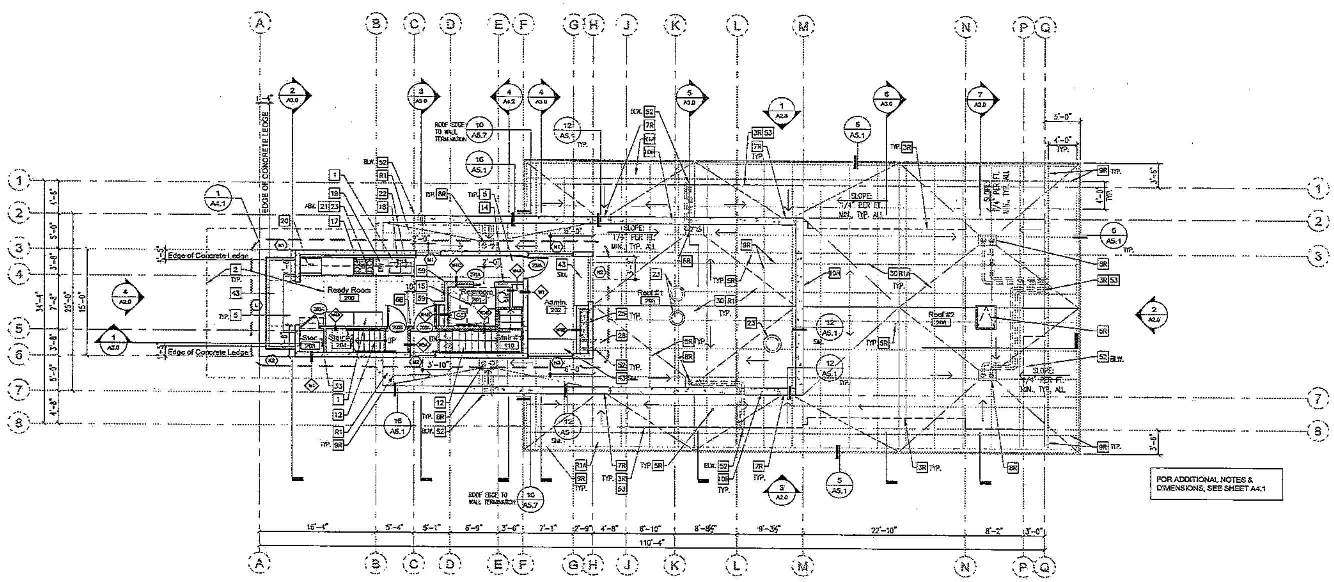

SECOND FLOOR / ROOF PLAN
1/8" = 1'-0"

ADDENDUM "A"

A-5

Dominy + Associates Architects @ domusstudio
2150 West Washington, Suite 303
San Diego, California 92110
Tel 619.692.9393
Fax 619.692.9394
domusstudio.com

SPEC. NO. 8147

LICENSED ARCHITECT WAYNE HOLTAN No. C12113 REN 9.30.15 STATE OF CALIFORNIA

PLANS FOR THE CONSTRUCTION OF
South Mission Beach Lifeguard Station

Second Floor + Roof Plan — A1.2

CITY OF SAN DIEGO, CALIFORNIA
ENGINEERING & CAPITAL PROJECTS
ARCHITECTURAL ENGINEERING & CONTRACTS DIVISION
SHEET 23 OF 94 SHEETS

WBS S-00791

APPROVED: FOR CITY ENGINEER — DATE 10/13/2014

SUBMITTED BY: JIHAD SLEIMAN, PROJECT MANAGER

DESCRIPTION	BY	APPROVED	DATE	FILMED
ORIGINAL	WH/TT			

YOUSIF BENYAMIN, PROJECT ENGINEER
218-1893 CCS27 COORDINATES
1858-6253 CCS83 COORDINATES

CONTRACTOR ______ DATE STARTED ______
INSPECTOR ______ DATE COMPLETED ______

32849-23-D

South Mission Beach Lifeguard Station
San Diego, California

General Notes

1. COMPLETE PLANS AND SPECIFICATIONS FOR ALL FIRE EXTINGUISHING SYSTEMS, INCLUDING AUTOMATIC SPRINKLER AND STANDPIPE SYSTEMS AND OTHER SPECIAL FIRE EXTINGUISHING SYSTEMS AND RELATED APPURTENANCES SHALL BE SUBMITTED TO THE CITY OF SAN DIEGO FOR REVIEW AND APPROVAL PRIOR TO INSTALLATION.
2. COMPLETE PLANS AND SPECIFICATIONS FOR ALL FIRE ALARM SYSTEMS SHALL BE SUBMITTED TO THE CITY OF SAN DIEGO DEVELOPMENT SERVICES FOR REVIEW AND APPROVAL PRIOR TO INSTALLATION.

Floor Plan Keyed Notes

- [1] BUILT-IN CABINETRY. SEE INTERIOR ELEVATIONS & FINISH SCHEDULE
- [2] LINE OF CEILING / ROOF / TRELLIS ABOVE.
- [3] STEEL PIPE COLUMN PER STRUCT. DWG'S. – PAINTED
- [4] HOSE BIB. RECESSED IN WALL, TYP. SEE PLUMBING DWG'S.
- [5] CONCRETE SLAB. FINISH PER FINISH SCHEDULE
- [6A] "EXIT" TACTILE SIGN – SEE DETAIL 10/A5.0
- [6B] "EXIT STAIR DOWN" TACTILE SIGN
- [7] ELECTRIC WASHER & DRYER SEE PLUMBING DWG'S & SPECS.
- [8] LINE OF OVERHEAD DOORS IN OPEN POSITION.
- [9] FLOOR DRAIN. SEE PLUMBING DWG'S. & DETAIL 15/A5.2 SIM.
- [10] CANTED GLAZING PER ELEVATION AND WINDOW SCHEDULE
- [11] WALL MOUNTED UTILITY SINK PER PLUMBING DWG'S.
- [12] METAL STAIRS. SEE ENLARGED PLAN A4.1 & STAIR PLAN A4.2
- [13] EXTERIOR GUARDRAIL AT (3RD FLOOR). SEE DETAIL 6, 9, 13/A5.2
- [14] FIRE EXTINGUISHER LOCATION: FOR MOUNT, REFER TO SPECS. FOR F.E., ALSO SEE DETAIL 2/A5.4 FOR RECESS MOUNTED (PER PLAN)
- [15] FLOOR DRAIN PER DETAIL 19/A5.1
- [16] MOP SINK SEE PLUMBING DWG'S AND SPECS.
- [17] SLIDE-IN ELECTRIC RANGE WITH MICROWAVE / TYPE II EXHAUST HOOD COMBINATION (400 CFM) ABOVE. SEE SPECS. & INSTALL PER MANUFACTURER'S INSTRUCTIONS.
- [18] SEAMLESS STAINLESS STEEL SINK PER SPEC. HOOK-UP PER PER PLUMBING PLANS. ALSO SEE DETAIL 18/A5.5
- [19] UNDER COUNTER DISHWASHER PER SPECIFICATIONS. VERIFY DISHWASHER CLEARANCES. SEE INTERIOR ELEVATIONS.
- [20] REFRIGERATOR SPACE. PROVIDE WATER & POWER.
- [21] MICROWAVE OVEN SEE SPECS. & ELECTRICAL DWG'S.
- [22] GARBAGE DISPOSAL UNDERSINK. PROVIDE POWER & SWITCH @ COUNTER. SEE ELECTRICAL AND PLUMBING PLANS
- [23] EXHAUST HOOD (TYPE II) – SEE MECHANICAL DWGS.
- [24] INDIVIDUAL GARAGE DOOR OPERATOR CONTROL SWITCH
- [25] HVAC SHAFT. SEE MECH. PLANS
- [26] MECHANICAL EQUIPMENT, SEE MECHANICAL DRAWINGS & DETAIL 17/A5.1
- [27] ROOF ACCESS ABOVE. SEE REFLECTED CEILING PLAN AND DETAIL 13/A5.1
- [28] SPLASH BLOCK PER DETAIL 1/A5.2
- [29] ACCESSIBLE LOCKER (1-TIER) w/ RECESS HANDLE W/ LIFTING TRIGGER HARDWARE – SEE INTERIOR ELEVATIONS & DETAIL 19/A5.0
- [30] ROOF BELOW.
- [31] BUILDING ENTRANCE ACCESSIBLE SIGN PER DETAIL 7/A5.0
- [32] DOOR THRESHOLD ON HIGH CURB – SEE DETAIL 17/A5.3
- [33] ADJUSTABLE SHELVES, PER INTERIOR ELEVATIONS & SPECS.
- [34] RECESSED KNOX BOX, PER FIRE AUTHORITY
- [35] FIRE RISER – SEE CIVIL & PLUMBING FOR CONTINUATION, PROVIDE STAINLESS STEEL CAGE ON TWO SIDES TO ENCLOSE FIRE RISER FULL HEIGHT.
- [36] FREE STANDING CONCRETE WALL, 12"X18" BLACK SLATE VENEER
- [37] RECEPTION DESK – SEE DETAIL 15/A5.5
- [38] MEDICAL PAC PROVIDED BY OWNER HANGING SYSTEM PROVIDED AND INSTALLED BY CONTRACTOR.
- [39] MASTER GARAGE DOOR CONTROL PANEL
- [40] RESCUE GURNEY BED PER SPECS
- [41] PROVIDE (12) GALV. J-HOOKS FOR HANGING BUOYS – REFER TO OWNER FOR LAYOUT
- [42] SWIM FINS RACK – HORIZ. PIPE BARS, MOUNT TO CONC. WALL SEE 2/A4.3 & 5/A5.7
- [43] READY ROOM COUNTER TOP PER DETAIL 2/A5.5
- [44] OBSERVATION ROOM COUNTER TOP PER DETAIL 1/A5.5
- [45] ACCESSIBLE CONCRETE SEAT AT FOOTWASH AND FIRST AID – SEE DETAIL 17/A5.2
- [46] REMOVABLE BOLLARD – SEE DETAIL 16/A5.0
- [47] INDICATES 2'-0" WIDE CONCRETE CURB AT BUILDING PERIMETER TO CONNECT TO ARMOR FLEX MAT AND BUILDING FOUNDATION – SEE CIVIL DETAIL B/C-4
- [48] PAINT EDGE METAL AT THIS RAISED AREA ONLY
- [49] WET SUIT HANGING RACK
- [50] CENTRIFUGAL DRYER BY OWNER
- [51] MECHANICAL LOUVER – SEE 2/A5.2 & MECH. DWGS.
- [52] ROOF DRAIN OVERFLOW OUTLET – SEE DETAIL 20/A5.1
- [53] LINE OF WALL BELOW
- [54] FLOW-THROUGH PLANTER: BIO-RETENTION SOIL OVER 6" GRAVEL BED W/ PERFORATED PIPE – DISCHARGE THROUGH WEEP HOLES – SEE CIVIL DRAWINGS
- [55] WATER SERVICE PRESSURE REDUCING VALVE (PRV)
- [56] FIRE SERVICE DETECTOR ASSEMBLY
- [57] 6" EXHAUST PIPE PER MECHANICAL DWGS.
- [58] ICE MACHINE PER SPEC.
- [59] STAINLESS STEEL CORNER GUARD PER SPEC – SEE DETAIL 5/A5.4
- [60] ACCESSIBLE SHOWER STALL – SEE DETAIL 12/A5.6
- [61] NON-ACCESSIBLE SHOWER STALL – SEE DETAIL 12/A5.5 & 16/A5.6
- [62] TRANSLUCENT RESIN PANEL 'CROSS' SEE DETAIL 10/A5.2
- [63] WALL RACK FOR RESCUE BOARDS, SEE DETAIL 2/A5.7
- [64] 12" HIGH WOOD FRAMED PLATFORM – SEE DETAIL 8 & 12/A5.7
- [65] 1-GALLON PLANTS [MUHLENBERGIA RIGENS (DEER GRASS)] AT FLOW-THROUGH STORMWATER PLANTERS (NON-IRRIGATED)

Floor Plan Notes

1. SYMBOL ⟨WX⟩ INDICATES WALL TYPE. SEE SHEET A6.2 FOR WALL ASSEMBLY INFO.
2. DIMENSIONS ARE TO FACE OF CONCRETE OR FACE OF BLOCK UNLESS NOTED OTHERWISE.
3. TYPICAL EXTERIOR WALL ASSEMBLY ⟨W1⟩ UNLESS NOTED OTHERWISE ON ARCHITECTURAL OR STRUCTURAL PLANS.
4. TYPICAL INTERIOR WALL ASSEMBLY ⟨W1⟩ OR ⟨W2⟩ UNLESS NOTED OTHERWISE ON ARCHITECTURAL OR STRUCTURAL PLANS.
5. PROVIDE APPROPRIATE WALL DEPTH WHERE ANY EQUIPMENT IS TO BE RECESSED IN WALL.
6. METAL STUD WALLS AT NON-BEARING, NON-SHEAR WALL LOCATIONS. SEE ASSEMBLY NOTES ON SHT. A6.2
7. SLOPE FLOORS TO DRAINS AS SHOWN ON ARCHITECTURAL FLOOR PLANS, PLUMBING PLANS.
8. WHERE ADDITIONAL DOOR ARE INSTALLED FOR EGRESS PURPOSES, THEY SHALL CONFORM TO ALL REQUIREMENTS OF CHAPTER 10, CBC SEC. 1003.3.1.1
9. FOR TIE ROD SPACING & CORNER LAYOUT OF CAST-IN-PLACE CONCRETE SEE DETAILS 8&12 A5.2.

SYMBOLS

ISA = INTERNATIONAL SYMBOL OF ACCESSIBILITY – SEE DETAIL 7/A5.0
FE = FIRE EXTINGUISHER – SEE DETAIL 2/A5.4

Wall Legend

- CAST IN PLACE CONCRETE WALLS – SEE STRUCTURAL DRAWINGS
- MASONRY WALLS – SEE STRUCTURAL DRAWINGS
- STUD WALLS – SEE STRUCTURAL DRAWINGS
- 2-HR FIRE RATED WALL – ASSEMBLY ⟨W2⟩ U.O.N. – SEE A6.2
- 1-HR FIRE RATED WALL – ASSEMBLY ⟨W5⟩ U.O.N – SEE A6.2

NOTE: FOR RATED PENETRATION DETAILS – SEE DETAIL 20/A5.5

- INDICATES 2'-0" WIDE CONCRETE CURB AT BUILDING PERIMETER TO CONNECT TO ARMOR FLEX MAT AND BUILDING FOUNDATION – SEE CIVIL DETAIL B/C-4
- (X) DOOR NUMBER: SEE DOOR SCHEDULE A6.0
- ⟨X⟩ WINDOW TYPE: SEE WINDOW SCHEDULE A6.1

Roof Plan Keyed Notes

- [R1A] LOW SLOPE ROOF MEMBRANE PER (SPECS) W/ TAPERED INSULATION – (ROOF TYPE 'R1A' ON SHEET A6.2). 1/4" PER FOOT MIN. SLOPE – FOR ROOF DETAILS SEE SHEET A5.1, FOR TAPERED INSULATION LAYOUT SEE 8/A5.1
- [R1] LOW SLOPE ROOF MEMBRANE PER (SPECS) W/ TAPERED INSULATION & INSULATION BLANKET – – (ROOF TYPE 'R1' ON SHEET A6.2). 1/4" PER FOOT MIN. SLOPE – FOR ROOF DETAILS SEE SHEET A5.1, FOR TAPERED INSULATION LAYOUT SEE 8/A5.1
- [2R] CRICKET – SEE DETAIL 9 & 10/A5.1 & ROOF PLAN NOTES BELOW.
- [3R] LINE OF WALL BELOW
- [4R] MECHANICAL EQUIPMENT, SEE MECHANICAL DRAWINGS
- [5R] VENT PIPE / INTAKE / EXHAUST, PER M.E.P. DRAWINGS HVAC EQUIPMENT – SEE DETAIL 15/A5.1
- [6R] ROOF HATCH, SEE DETAIL 13/A5.1
- [7R] THRU-WALL SCUPPER, SEE DETAIL 12/A5.1
- [8R] ROOF DRAIN AND ROOF OVERFLOW DRAIN, SEE DETAIL 8/A5.1
- [9R] BIRD WIRE PER SPECS – LOCATE AT 4'-0" O.C.
- [10R] PARAPET SLOPE AT 45° – SEE DETAIL 18/A5.1

Roof Plan Notes

1. ALL ROOF CONSTRUCTION SHOWN ON THIS SHEET IS ROOF ASSEMBLY ⟨R1⟩⟨R2⟩ U.N.O. SEE SHEET A6.2 FOR ROOF CLASSIFICATION SCHEDULE.
2. HEIGHT INDICATED ON THIS PLAN ARE TO TOP OF ROOF DECK UNLESS NOTED OTHERWISE. HEIGHTS ARE MEASURED FROM TOP OF MAIN FLOOR CONCRETE SLAB. (0'-0")
3. MINIMUM ROOF SLOPES, INCLUDING CRICKETS, TO BE 3/8" PER FOOT U.N.O. MINIMUM SLOPE AT CROSS FALLS TO BE 1/4" PER FOOT.
4. DS : DOWN SPOUT
   RD : ROOF DRAIN
   OF : OVERFLOW
   T.O.P. : TOP OF PARAPET
   T.O. PLY : TOP OF PLYWOOD
5. DOWN SPOUTS, ROOF DRAINS AND OVERFLOWS TO RUN OUTSIDE WALL, UNLESS NOTED OTHERWISE, SEE PLUMBING PLANS FOR CONTINUATION.
6. OVERFLOW DRAINS SHALL DISCHARGE TO AN APPROVED LOCATION AND SHALL NOT BE CONNECTED TO ROOF DRAIN LINES (C.B.C. 1506)
7. REQUIRED ROOF : MINIMUM OF CLASS A PER UBC TABLE 15-A
8. PLUMBING VENTS TO BE GANGED TO MINIMIZE ROOF PENETRATIONS.
9. SUPPLY AND INSTALL GALVANIZED SHEET METAL ROOF JACKS FOR VENTING. VENTS SHALL BE GANGED TOGETHER AND ROUTED TO BACKSIDE OF ROOF TO PENETRATE ROOF AS DIRECTED BY ARCHITECT, (MIN. 18" FROM FASCIA & 18" MIN. FROM RIDGES).

Occupant Loads

ROOM NO.	ROOM NAME	AREA	OCCUPANCY	OCCUPANT LOAD FACTOR	OCCUPANT LOAD	EXITS NEEDED
301	OBSERVATION TOWER	125 SF	B	100	2	1

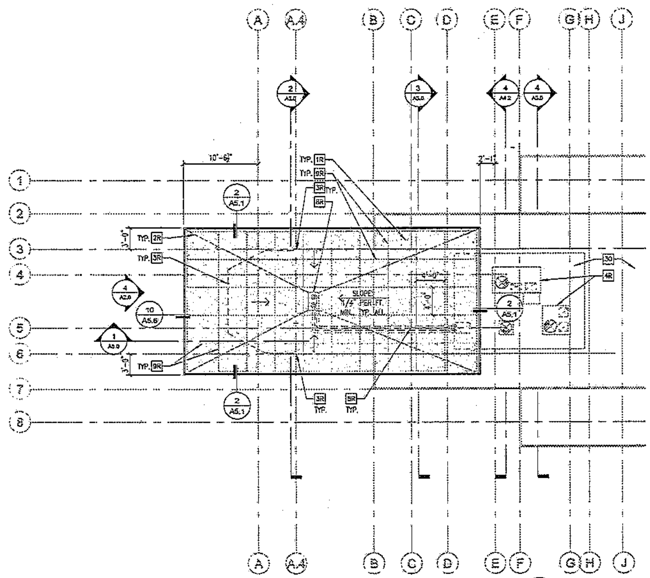

OBSERVATION LEVEL ROOF PLAN
1/8" = 1'-0"
F.F. = +41.67' MSL

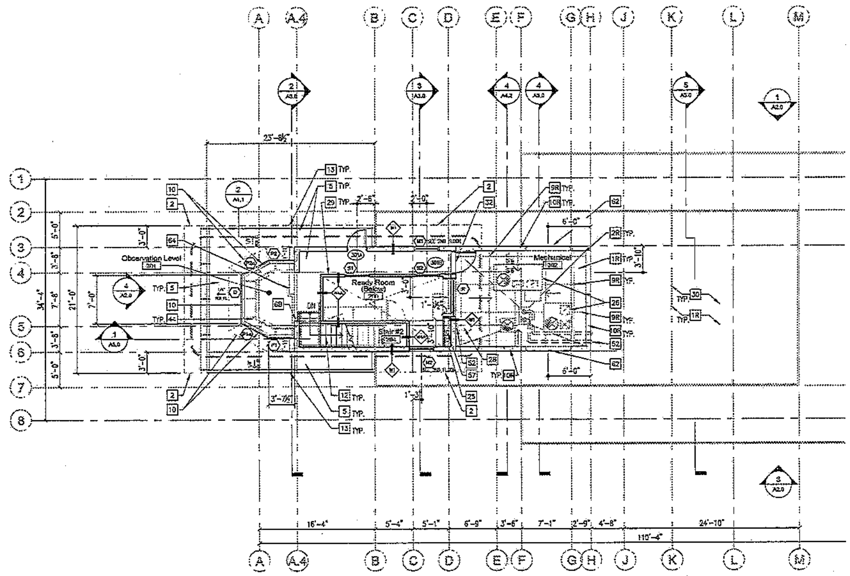

THIRD LEVEL PLAN
1/8" = 1'-0"
F.F. = +32.00' MSL

ADDENDUM "A"

Dominy + Associates Architects @ domusstudio
2150 West Washington, Suite 303
San Diego, California 92110
Tel 619.692.9393
Fax 619.692.9394
domusstudio.com

SPEC. NO. 8147

LICENSED ARCHITECT WAYNE HOLTAN No. C-2113 REN 9.30.15 STATE OF CALIFORNIA

A-6

PLANS FOR THE CONSTRUCTION OF
South Mission Beach Lifeguard Station

Third Level + Roof Plan | A1.3

CITY OF SAN DIEGO, CALIFORNIA
ENGINEERING & CAPITAL PROJECTS
ARCHITECTURAL ENGINEERING & CONTRACTS DIVISION
SHEET 24 OF 94 SHEETS

WBS S-00791

APPROVED: [signature] FOR CITY ENGINEER — DATE 10/13/2014

SUBMITTED BY: JIHAD SLEIMAN, PROJECT MANAGER

DESCRIPTION	BY	APPROVED	DATE	FILMED
ORIGINAL	WH/TT			

YOUSIF BENYAMIN, PROJECT ENGINEER
218-1693 CCS27 COORDINATES
1856-6253 CCS83 COORDINATES

CONTRACTOR ______ DATE STARTED ______
INSPECTOR ______ DATE COMPLETED ______

32849-24-D

Proprietary design: These drawings and design are protected by common law copyright. All patentable material contained herein and engineering with Dominy + Associates Architects @ domusstudio LLP shall be the property of Dominy + Associates Architects @ domusstudio LLP
© COPYRIGHT October 13, 2014 at 7:55AM

South Mission Beach Lifeguard Station
San Diego, California

Reflected Ceiling Plan Keyed Notes

- [1] GYP. DROP SOFFIT FOR MECH. DUCT PER MECHANICAL DRAWINGS, TYP. – SEE 17/A5.5
- [2] LIGHTS PER ELECTRICAL DRAWINGS, TYP.
- [3] MECHANICAL UNIT OR SHAFT PER MECHANICAL DRAWINGS
- [4] COLUMN PER STRUCTURAL DWG'S.
- [5] MOISTURE & MOLD RESISTANT GYPSUM BOARD CEILING
- [5A] CEMENT FIBER BOARD SOFFIT AT EXTERIOR
- [6] GYPSUM BOARD CONTROL JOINT, U.S.G. No. 093
- [7] CONCRETE SLAB PER STRUCTURAL DWG'S
- [8] LINE OF OVERHEAD METAL DOOR & TRACK
- [9] ROOF DRAIN PIPING. SEE PLUMBING AND CIVIL DRAWINGS
- [10] SURFACE MOUNTED SPEAKER SYSTEM PER SPECIFICATIONS – SEE ELECTRICAL DWG'S
- [11] BINOCULAR CEILING MOUNT – SEE DETAIL 8/A5.4
- [12] ROOF ACCESS LADDER. SEE DETAIL 13/A5.1
- [13] 1/2" ALUM. "T" REVEAL REGLET BY "FRYRECLET"; TDM–625–75, WHERE GYPSUM BOARD MEETS CONCRETE WALL/CEILING. – DO NOT PAINT – SEE DETAIL 20/A5.2
- [14] BUILT–IN CABINETRY. SEE INTERIOR ELEVATIONS
- [15] GARAGE DOOR OPERATOR AND TROLLEY
- [16] GLAZING PER WINDOW PLAN AND WINDOW SCHEDULE
- [17] NOT USED
- [18] RETURN AIR GRILLE – SEE MECH. DWGS.
- [19] SUSP. ACOUSTICAL CEILING TILE – PER SPECS, SEE DETAILS 13, 15, 18/A5.4
- [20] EXPOSED MECHANICAL DUCT – PAINT MATTE BLACK
- [21] SCREEN WALLS
- [22] WINDOW ROLLER SHADE PER SPECS (RECESSED U.N.O.) – SEE DETAIL 19/A5.4
- [23] 1½" ACOUSTICAL PANELS PER SPECS.
- [24] GYP. BD. TO WRAP STRUCTURAL BEAM – SEE DETAIL 20/A5.4
- [25] COORDINATE SPRINKLER PIPING & HEADS WITH GARAGE DOORS, LIGHTS, AND OPERATOR TROLLEY LAYOUT
- [26] COPPER SEAM – ALIGN WITH VERTICAL FASCIA SEAM

Reflected Ceiling Legend

- EXPOSED STRUCTURE
- GYPSUM BOARD – SEE FINISH SCHEDULE FOR TYPE
- CEMENT BOARD SOFFIT – SEE FINISH SCHEDULE FOR TYPE
- ACOUSTICAL PANEL – SEE FINISH SCHEDULE
- SUSPENDED ACOUSTICAL CEILING TILE – SEE DETAILS 13–17/A5.4
- RA: 30" X 36" CLR. OPENING ROOF ACCESS HATCH PER SPECIFICATIONS – PAINT TO MATCH ADJACENT CEILING COLOR
- SLOPED CEILING – ARROW POINTS DOWN SLOPE
- EXIT SIGN
- LIGHTS PER ELECTRICAL DRAWINGS

Reflected Ceiling Plan Notes

1. ALL CEILINGS EXPOSED STRUCTURE U.N.O.
2. PROVIDE 2X FRAMING @16" O.C. MIN. @ GYP. BD. CEILINGS – TYP.
3. WALLS ARE FULL HEIGHT TO ROOF DECK TYP.
4. SEE ELECTRICAL PLANS AND SPECIFICATIONS FOR FIXTURE TYPES & RECESSED LOCATIONS.
5. CONTRACTOR TO COORDINATE LOCATION OF FIXTURES, DUCTS, GRILLES, ETC. & NOTIFY ARCHITECT SHOULD ANY CONFLICTS ARISE.
6. FOR GRILLE, FAN, AND DUCT SIZES, SEE MECHANICAL DRAWINGS AND SPECIFICATIONS. PAINT TO MATCH ADJACENT PAINTED SURFACE, U.N.O. SEE FINISH SCHEDULE AND SPECIFICATIONS FOR ADDITIONAL INFO.
7. AT EXPOSED LOCATIONS, ALL DUCTS, CONDENSER LINES, FIRE LINES, ELECTRICAL LINES, ETC. SHALL BE RUN IN AN ORDERLY AND ORTHOGONAL MANNER. ALL RUNS SHALL BE PERPENDICULAR OR PARALLEL TO FRAMING. THERE SHALL BE NO DIAGONAL RUNS U.N.O.
8. CEILING ELEVATIONS NOTED ARE FROM FINISH FLOOR ELEVATION U.N.O.
9. SPRINKLER HEAD LOCATIONS SHALL BE PLACED IN A MANNER THAT COMPLIMENTS THE DESIGN. COORDINATE AND REVIEW LAYOUT WITH ARCHITECT PRIOR TO INSTALLATION.
10. PAINT ALL EXPOSED GRILLES, DUCTS, CONDUIT, COLOR AS SELECTED BY ARCHITECT.

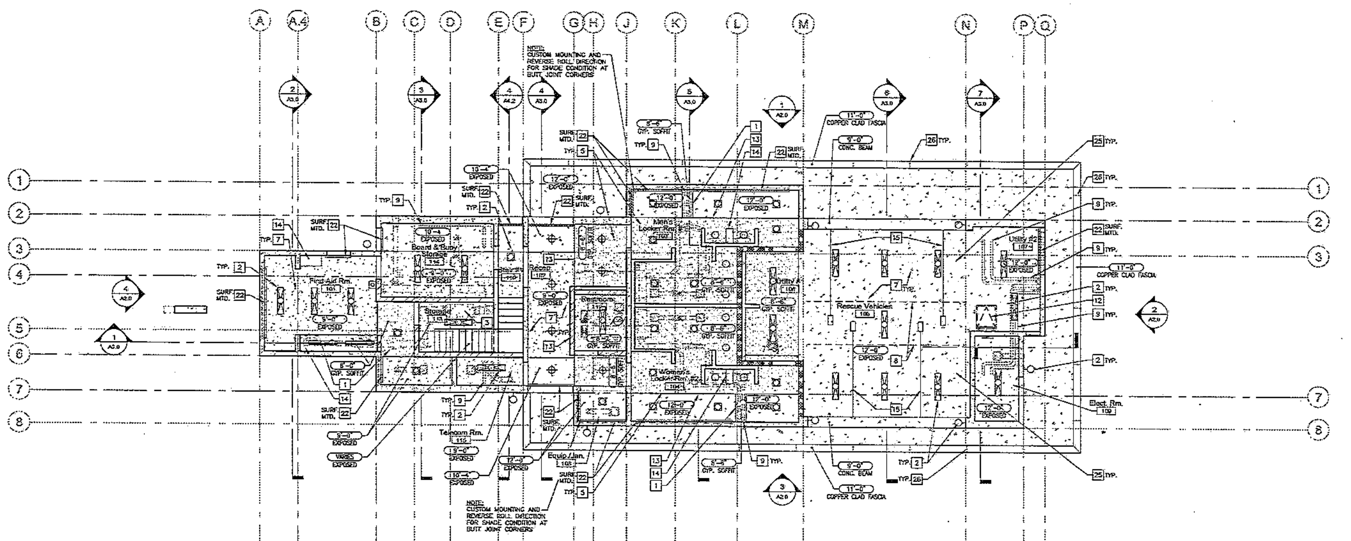

FIRST FLOOR REFLECTED CEILING PLAN

A-7

Domusy + Associates Architects @ domusstudio
2150 West Washington, Suite 303
San Diego, California 92110
Tel 619.692.9393
Fax 619.692.9394
domusstudio.com

SPEC. NO 8147

LICENSED ARCHITECT WAYNE HOLTAN No. C12113 REN 9.30.15 STATE OF CALIFORNIA

PLANS FOR THE CONSTRUCTION OF
South Mission Beach Lifeguard Station

First Floor Reflected Ceiling Plan | A1.4

CITY OF SAN DIEGO, CALIFORNIA
ENGINEERING & CAPITAL PROJECTS
ARCHITECTURAL ENGINEERING & CONTRACTS DIVISION
SHEET 25 OF 94 SHEETS

WBS S-00791

APPROVED: FOR CITY ENGINEER — DATE 10/13/2014

SUBMITTED BY: JIHAD SLEIMAN, PROJECT MANAGER

DESCRIPTION	BY	APPROVED	DATE	FILMED
ORIGINAL	WH/TT			

YOUSIF BENYAMIN — PROJECT ENGINEER
218-1693 — CCS27 COORDINATES
1858-6253 — CCS83 COORDINATES

CONTRACTOR ______ DATE STARTED ______
INSPECTOR ______ DATE COMPLETED ______

32849–25–D

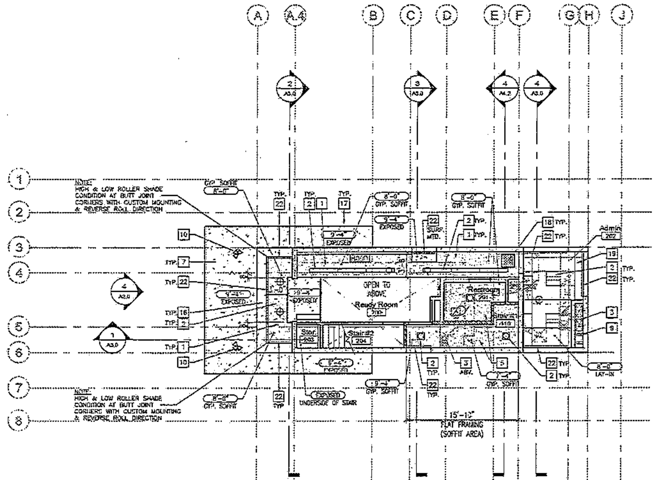

SECOND FLOOR REFLECTED CEILING PLAN

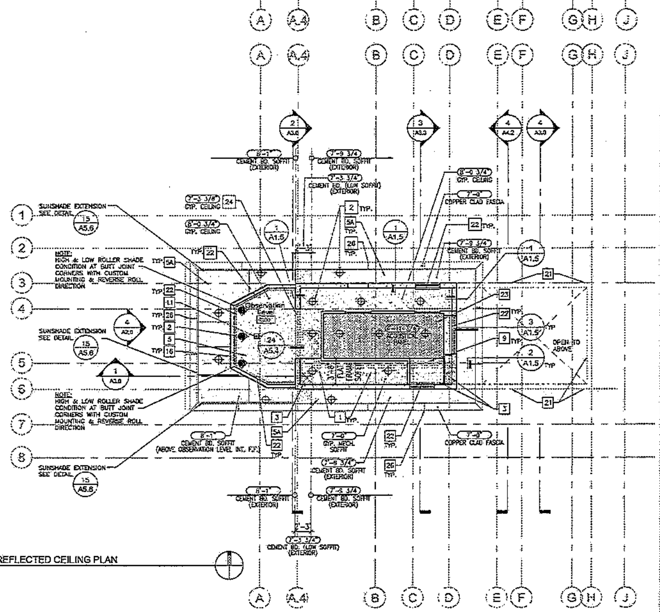

OBSERVATION LEVEL REFLECTED CEILING PLAN

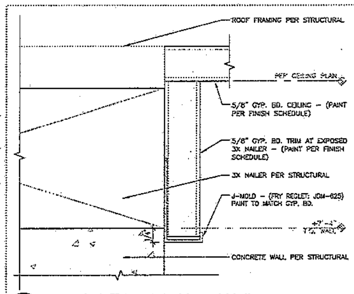

1 Gyp. Bd. Trim at 3rd Level Hallway
1" = 1'

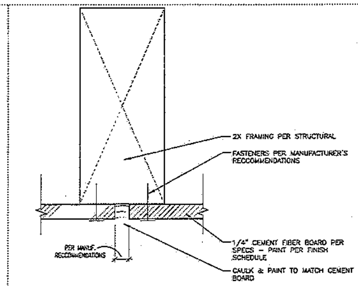

2 Cement Fiber Board Soffit Panel Joint
1" = 1'

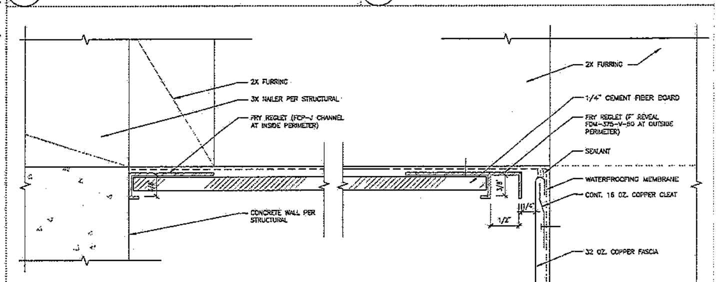

3 Cement Fiber Board Soffit at Edge Conditions
1" = 1'

Reflected Ceiling Plan Keyed Notes

1. GYP. DROP SOFFIT FOR MECH. DUCT PER MECHANICAL DRAWINGS, TYP. – SEE 17/A5.5
2. LIGHTS PER ELECTRICAL DRAWINGS, TYP.
3. MECHANICAL UNIT OR SHAFT PER MECHANICAL DRAWINGS
4. COLUMN PER STRUCTURAL DWG'S.
5. MOISTURE & MOLD RESISTANT GYPSUM BOARD CEILING
5A. CEMENT FIBER BOARD SOFFIT AT EXTERIOR
6. GYPSUM BOARD CONTROL JOINT, U.S.G. No. 093
7. CONCRETE SLAB PER STRUCTURAL DWG'S
8. LINE OF OVERHEAD METAL DOOR & TRACK.
9. ROOF DRAIN PIPING. SEE PLUMBING AND CIVIL DRAWINGS
10. SURFACE MOUNTED SPEAKER SYSTEM PER SPECIFICATIONS – SEE ELECTRICAL DWG'S
11. BINOCULAR CEILING MOUNT – SEE DETAIL 8/A5.4
12. ROOF ACCESS LADDER. SEE DETAIL 13/A5.1
13. 1/2" ALUM. 'T' REVEAL REGLET BY 'FRYREGLET': TDM-625-75, WHERE GYPSUM BOARD MEETS CONCRETE WALL/CEILING. – DO NOT PAINT – SEE DETAIL 20/A5.2
14. BUILT-IN CABINETRY. SEE INTERIOR ELEVATIONS
15. GARAGE DOOR OPERATOR AND TROLLEY
16. GLAZING PER WINDOW PLAN AND WINDOW SCHEDULE
17. NOT USED
18. RETURN AIR GRILLE – SEE MECH. DWGS.
19. SUSP. ACOUSTICAL CEILING TILE – PER SPECS. SEE DETAILS 13, 15, 18/A5.4
20. EXPOSED MECHANICAL DUCT – PAINT MATTE BLACK
21. SCREEN WALLS
22. WINDOW ROLLER SHADE PER SPECS (RECESSED U.N.O.) – SEE DETAIL 19/A5.4
23. 1½" ACOUSTICAL PANELS PER SPECS.
24. GYP. BD. TO WRAP STRUCTURAL BEAM – SEE DETAIL 20/A5.4
25. COORDINATE SPRINKLER PIPING & HEADS WITH GARAGE DOORS, LIGHTS, AND OPERATOR TROLLEY LAYOUT
26. COPPER SEAM – ALIGN WITH VERTICAL FASCIA SEAM

Reflected Ceiling Legend

- EXPOSED STRUCTURE
- GYPSUM BOARD – SEE FINISH SCHEDULE FOR TYPE
- CEMENT BOARD SOFFIT – SEE FINISH SCHEDULE FOR TYPE
- ACOUSTICAL PANEL – SEE FINISH SCHEDULE
- SUSPENDED ACOUSTICAL CEILING TILE – SEE DETAILS 13-17/A5.4
- RA: 30" X 36" CLR. OPENING ROOF ACCESS HATCH PER SPECIFICATIONS – PAINT TO MATCH ADJACENT CEILING COLOR
- SLOPED CEILING – ARROW POINTS DOWN SLOPE
- EXIT SIGN
- LIGHTS PER ELECTRICAL DRAWINGS

Reflected Ceiling Plan Notes

1. ALL CEILINGS EXPOSED STRUCTURE U.N.O.
2. PROVIDE 2X FRAMING @16" O.C. MIN. @ GYP. BD. CEILINGS – TYP.
3. WALLS ARE FULL HEIGHT TO ROOF DECK TYP.
4. SEE ELECTRICAL PLANS AND SPECIFICATIONS FOR FIXTURE TYPES & RECESSED LOCATIONS.
5. CONTRACTOR TO COORDINATE LOCATION OF FIXTURES, DUCTS, GRILLES, ETC. & NOTIFY ARCHITECT SHOULD ANY CONFLICTS ARISE.
6. FOR GRILLE, FAN, AND DUCT SIZES, SEE MECHANICAL DRAWINGS AND SPECIFICATIONS. PAINT TO MATCH ADJACENT PAINTED SURFACE, U.N.O. SEE FINISH SCHEDULE AND SPECIFICATIONS FOR ADDITIONAL INFO.
7. AT EXPOSED LOCATIONS, ALL DUCTS, CONDENSER LINES, FIRE LINES, ELECTRICAL LINES, ETC. SHALL BE RUN IN AN ORDERLY AND ORTHOGONAL MANNER. ALL RUNS SHALL BE PERPENDICULAR OR PARALLEL TO FRAMING. THERE SHALL BE NO DIAGONAL RUNS U.N.O.
8. CEILING ELEVATIONS NOTED ARE FROM FINISH FLOOR ELEVATION U.N.O.
9. SPRINKLER HEAD LOCATIONS SHALL BE PLACED IN A MANNER THAT COMPLEMENTS THE DESIGN. COORDINATE AND REVIEW LAYOUT WITH ARCHITECT PRIOR TO INSTALLATION.
10. PAINT ALL EXPOSED GRILLES, DUCTS, CONDUIT, COLOR AS SELECTED BY ARCHITECT.

South Mission Beach Lifeguard Station
San Diego, California

A-8

Domusy + Associates Architects @ domusstudio
2150 West Washington, Suite 303
San Diego, California 92110
Tel 619.692.9393
Fax 619.692.9394
domusstudio.com

SPEC. NO 8147

LICENSED ARCHITECT — WAYNE HOLTAN — No. C12113 — REN 9.30.15 — STATE OF CALIFORNIA

PLANS FOR THE CONSTRUCTION OF
South Mission Beach Lifeguard Station

Second + Third RCP's — A1.5

CITY OF SAN DIEGO, CALIFORNIA
ENGINEERING & CAPITAL PROJECTS
ARCHITECTURAL ENGINEERING & CONTRACTS DIVISION
SHEET 26 OF 94 SHEETS

WBS S-00791

APPROVED: FOR CITY ENGINEER — DATE 10/13/2014

SUBMITTED BY: JIHAD SLEIMAN, PROJECT MANAGER

DESCRIPTION	BY	APPROVED	DATE	FILMED
ORIGINAL	WH/TT			

YOUSIF BENYAMIN, PROJECT ENGINEER
218-1693 CCS27 COORDINATES
1858-6253 CCS83 COORDINATES

CONTRACTOR ______ DATE STARTED ______
INSPECTOR ______ DATE COMPLETED ______

32849-26-D

South Mission Beach Lifeguard Station
San Diego, California

Elevation / Section Keyed Notes

1. CAST IN PLACE CONCRETE – SMOOTH TEXTURED FINISH PER SPECIFICATIONS (SEAL ALL EXPOSED CONCRETE & CMU) – SEE DETAIL 8 & 11/A5.2 FOR FORM TIE
2. CMU. FINISH PER SPEC.
3. CAST IN PLACE ROOF / FLOOR – SMOOTH FINISH (NON-SLIP FINISH AT FLOORS)
4. GRAFFITI COATING TYPICAL
5. ROOF DRAIN & OVERFLOW PER PLAN
6. COPPER FASCIA – SEE DETAIL 2 & 5 /A5.1
7. WINDOW / DOOR SYSTEM FRAMES PER SCHEDULE & SPEC.
7A. ALUMINUM FRAME WINDOW SYSTEM. SEE WINDOW SCHED.
7B. SINGLE GLAZED WINDOWS, BUTT JOINT
8. BUILDING ADDRESS NUMBER PER SPECS. AND 9/A5.4 SIM.
9. EXTERIOR GUARDRAIL. SEE DETAIL 6, 9, 13/A5.2
10. OVERHEAD DOOR. PER DOOR SCHED.
11. LIGHT FIXTURE PER ELECTRICAL DWG'S.
12. BUILDING SIGNAGE – SEE DETAIL 9/A5.4
13. FINISHED GRADE
14. EXPOSED CONCRETE OR CMU BLOCK– SEALED PER SPEC.
15. GYP. BOARD SOFFIT / CEILING, SEE SCHEDULE.
16. HVAC EQUIPMENT / DUCTS. PER MECHANICAL DWG'S.
17. DOOR LOUVER – SEE MECH. DWGS.
18. BATT INSULATION: ROOF = R30 MIN., EXT. WALLS ARE 8" CONCRETE (NO INSULATION)
19. PLYWOOD SHEATHING PER STRUCT. DWG'S.
20. FRAMING PER STRUCT. DWG'S.
21. GYP. BOARD. & FINISH PER SCHEDULE
22. HIGH PERFORMANCE BLANKET INSULATION
23. CONCRETE FOUNDATION / SLAB PER STRUCT. DWG'S.
23A. ERROSION CONTROL MAT PER CIVIL
24. CEILING JOISTS – SEE STRUCTURAL
25. MEMBRANE ROOF OVER FIBERGLASS MAT GYPSUM ROOF BOARD, PER SPECS.
26. CABINETRY / COUNTER, SEE INTERIOR ELEVATIONS
27. CONCRETE SPLASH BLOCK – SEE DETAIL 1/A5.2
28. MECHANICAL LOUVER, PER MECHANICAL DWG'S & 2/A5.2
29. COPPER ROOF DRAIN/OVERFLOW OUTLET SPOUT. SEE DETAIL 20/A5.1 SIM. SEE PLUMBING FOR TYPE OF DRAIN
30. HOOD EXHAUST PER MECHANICAL DRAWINGS. FLASHING
31. ACCESSIBLE BUILDING ENTRANCE IDENTIFICATION SIGN. SEE DTL. 6/A5.0
32. FIRE ALARM BELL LOCATION
33. FREE STANDING CONC WALL
34. DOOR ACCESS KEYPAD MOUNTED AT ACCESSIBLE HEIGHT, 4'-0" A.F.F. – SEE ELECTRICAL DRAWINGS.
35. TAPERED INSULATION, PER ROOF PLAN AND SPECS – ALSO SEE 8/5.1
36. METAL STAIR W/ CONCRETE TREADS
37. SPEAKER, PER ELECTRICAL
38. LOCKERS PER SPECS.
39. CONCRETE FLATWORK – 5" THICK WITH #3 AT 18" O.C.E.W., TYP. OVER COMPACTED BASE – NATURAL GRAY CONCRETE WITH LIGHT BROOM FINISH, TYP. – SLOPE AWAY FROM BUILDING
40. CONCRETE SLAB OVER SAND BASE OVER STRUCTURAL SLAB – SEE STRUCTRAL DWG'S
41. HOSE BIB BOX PER PLUMBING DWG'S
42. SAND BED FOR PLUMBING PIPES & CONDUITS
43. ROOF ACCESS LADDER AND HATCH – SEE DETAIL 3/A5.1
44. RESCUE GURNEY BED PER SPECS
45. BINOCULAR CEILING MOUNT – SEE DETAIL 8/A5.4
46. CEMENT FIBER BOARD SOFFIT
47. TYPICAL CONCRETE CURB PER SEE STRUCTURAL – SEE DETAIL 14/A5.2
48. 1/2" ALUM. "T" REVEAL REGLET BY 'FRYREGLET': TDM-TDM-625-75, WHERE GYPSUM BOARD MEETS CONCRETE WALL/CEILING. – DO NOT PAINT – SEE SEE DETAIL 20/A5.2
49. SUSPENDED ACOUSTICAL CEILING TILE – PER SPECS
50. FLOW-THROUGH PLANTER: BIO-RETENTION SOIL OVER 6" GRAVEL BED W/ PEFORATED PIPE – DISCHARGE THROUGH WEEP HOLES – SEE CIVIL DWGS.
51. FIRE RISER – SEE CIVIL & PLUMBING FOR CONTINUATION
52. GARAGE DOOR OPERATOR AND TROLLEY
53. WINDOW ROLLER SHADE PER SPECS (RECESSED U.N.O.) – SEE DETAIL 19/A5.4
54. BELOW GRADE WATERPROOFING – SEE DETAIL 8/ A5.6
55. LINE INSIDE OF ALL PLANTER WALLS AND FLOOR WITH WATERPROOFING MEMBRANE PER SPECS – TERMINATE WITH COPPER FLASHING AT TOP, SIMILAR TO DETAIL 8/A5.6
56. 2x4 WEEP HOLE OPENING FOR BIO-RETENTION PLANTER DRAINAGE
57. "F" REVEAL – (FRY REGLET FDM-375-V-50 AT OUTSIDE PERIMETER & FCP-J CHANNEL AT INSIDE PERIMETER)
58. 12" HIGH WOOD FRAMED PLATFORM – SEE DETAIL 8 & 12/A5.7
59. TYPICAL VERTICAL COPPER SEAM – SEE DETAIL 2 & 5/A5.1 AND 10/A5.6
60. TOP OF PARAPET SHALL BE ANGLED 45° – SEE DETAIL 18/A5.1
61. CONCRETE PANEL JOINTS – SEE SHEET A2.1

Elevation / Section Notes

1. CONFIRM WITH ARCHITECT LOCATION OF EXPOSED CONDUIT OR SURFACE MOUNTED BOXES, PRIOR TO INSTALLATION.
2. THE HIGHEST POINT OF THE ROOF, EQUIPMENT, OR ANY VENT, PIPE, ANTENNA OR OTHER PROJECTION SHALL NOT EXCEED 30 FEET ABOVE GRADE.
3. TYPICAL: FOR PANEL LAYOUT, SEE SHEET A2.1

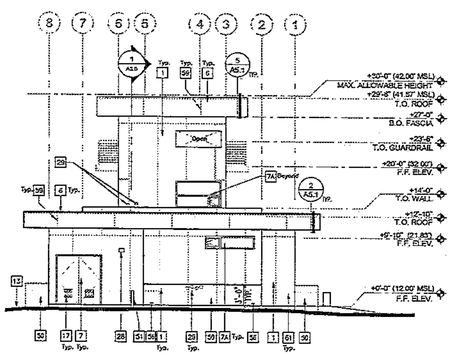

2 EAST ELEVATION

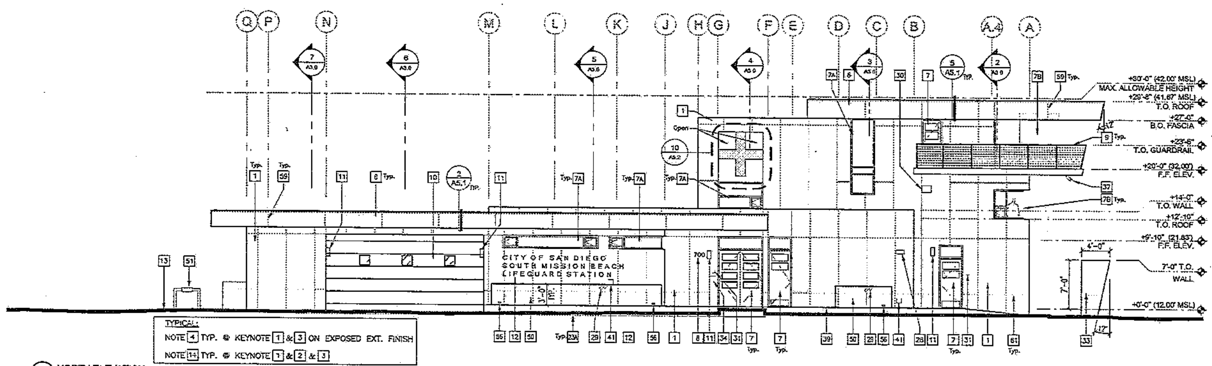

1 NORTH ELEVATION

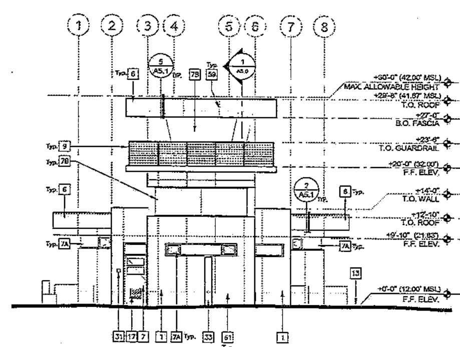

4 WEST ELEVATION

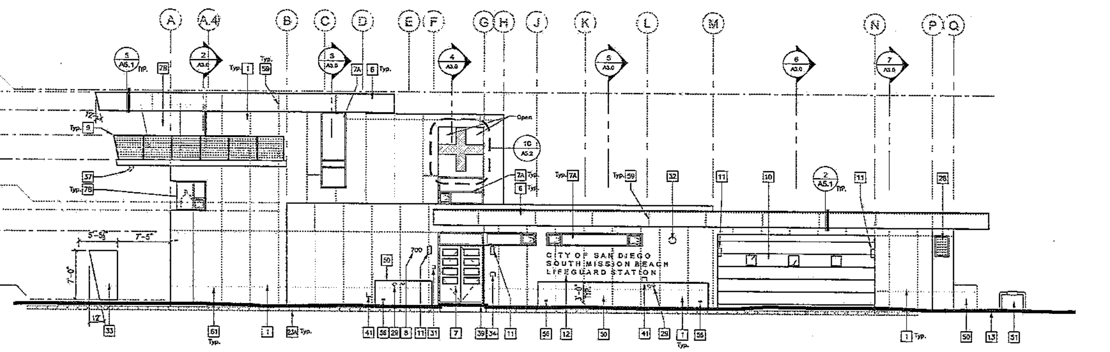

3 SOUTH ELEVATION

A-9

Domusy + Associates Architects @ domusstudio
2150 West Washington, Suite 303
San Diego, California 92110
Tel 619.692.9393
Fax 619.692.9394
domusstudio.com

SPEC. NO. 8147

LICENSED ARCHITECT
WAYNE HOLTAN
No. C21115
REN 9.30.15
STATE OF CALIFORNIA

PLANS FOR THE CONSTRUCTION OF
South Mission Beach Lifeguard Station

Exterior Elevations — A2.0

CITY OF SAN DIEGO, CALIFORNIA
ENGINEERING & CAPITAL PROJECTS
ARCHITECTURAL ENGINEERING & CONTRACTS DIVISION
SHEET 27 OF 94 SHEETS

WBS S-00791

APPROVED: FOR CITY ENGINEER — DATE 10/13/2014

SUBMITTED BY: JIHAD SLEIMAN, PROJECT MANAGER

DESCRIPTION	BY	APPROVED	DATE	FILMED
ORIGINAL	WH/TT			

YOUSIF BENYAMIN — PROJECT ENGINEER
218-1693 — CCS27 COORDINATES
1858-6253 — CCS83 COORDINATES

CONTRACTOR ______ DATE STARTED ______
INSPECTOR ______ DATE COMPLETED ______

32849-27-D

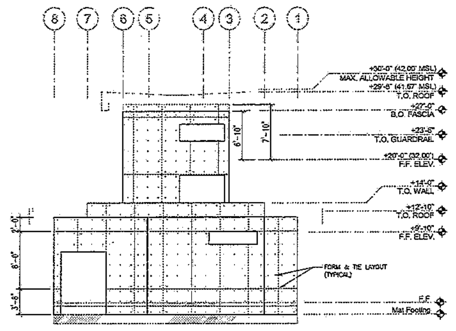

2 EAST ELEVATION

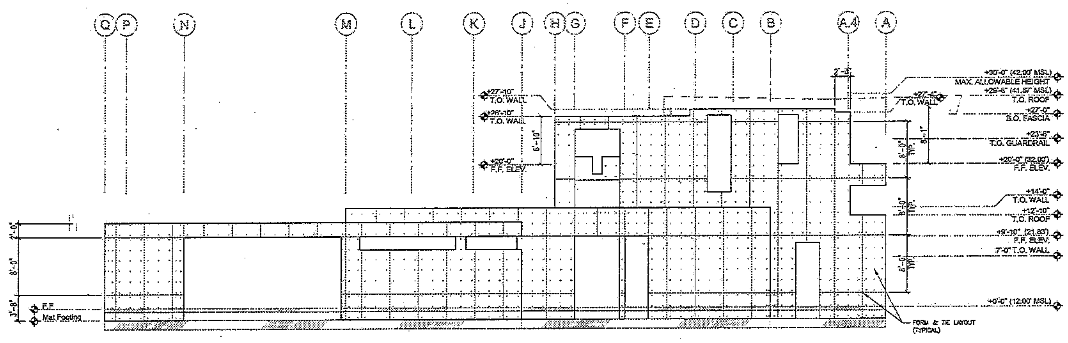

1 NORTH ELEVATION

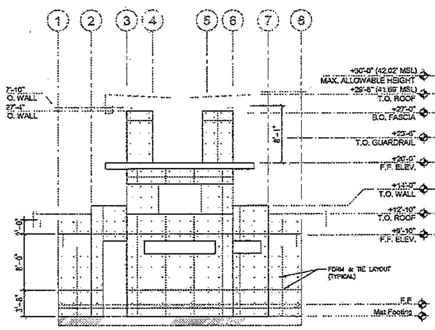

4 WEST ELEVATION

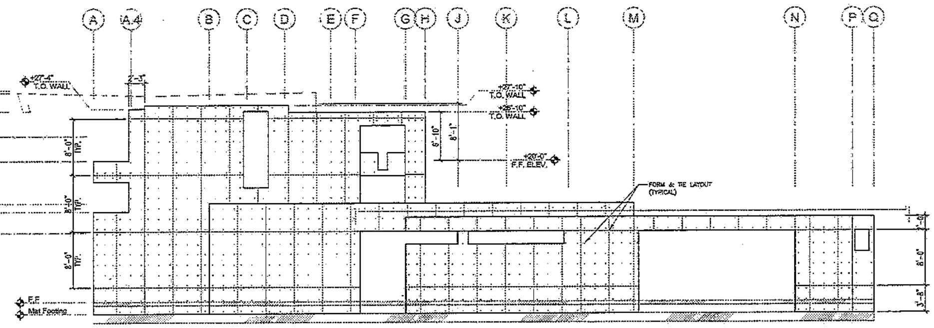

3 SOUTH ELEVATION

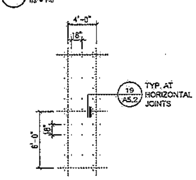

5 TYPICAL PANEL

NOTE:

1. SUBCONTRACTOR TO PROVIDE SHOP DRAWINGS OF PANEL LAYOUT AND TIE LOCATIONS FOR REVIEW BY ARCHITECT, PRIOR TO FORMWORK FABRICATION.
2. FOR TYPICAL DETAILS SEE 8, 11 AND 12 / A5.2

South Mission Beach Lifeguard Station
San Diego, California

A-10

Dominy + Associates Architects @ domusstudio
2150 West Washington, Suite 303
San Diego, California 92110
Tel 619.692.9393
Fax 619.692.9394
domusstudio.com

SPEC. NO. 8147

LICENSED ARCHITECT WAYNE HOLTAN No. C12113 REN 9.30.15 STATE OF CALIFORNIA

PLANS FOR THE CONSTRUCTION OF

South Mission Beach Lifeguard Station

Cast-In-Place Panel Layout | A2.1

CITY OF SAN DIEGO, CALIFORNIA
ENGINEERING & CAPITAL PROJECTS
ARCHITECTURAL ENGINEERING & CONTRACTS DIVISION
SHEET 28 OF 94 SHEETS

WBS S-00791

APPROVED: FOR CITY ENGINEER — DATE 10/13/2014

SUBMITTED BY: JIHAD SLEIMAN, PROJECT MANAGER

DESCRIPTION	BY	APPROVED	DATE	FILMED
ORIGINAL	WH/TT			

YOUSIF BENYAMIN — PROJECT ENGINEER
218-1693 — CCS27 COORDINATES
1858-6253 — CCS83 COORDINATES

CONTRACTOR ____ DATE STARTED ____
INSPECTOR ____ DATE COMPLETED ____

32849-28-D

© COPYRIGHT October 13, 2014 at 8:18 AM. Proprietary design. These drawings and design are protected by common law copyright. All patentable material contained herein and originating with Dominy + Associates Architects @ domusstudio LLP shall be the property of Dominy + Associates Architects @ domusstudio LLP.

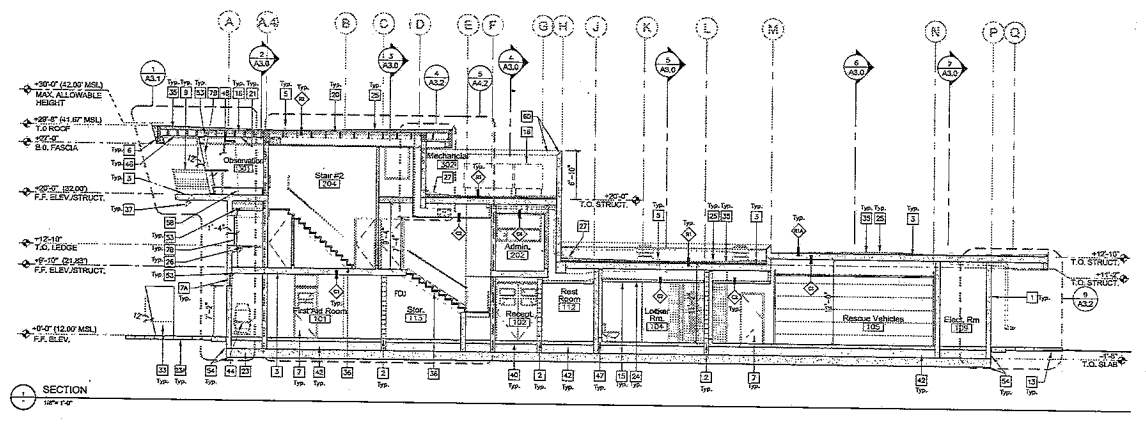

1 SECTION 1/8"=1'-0"

Elevation / Section Keyed Notes

1. CAST IN PLACE CONCRETE – SMOOTH TEXTURED FINISH PER SPECIFICATIONS (SEAL ALL EXPOSED CONCRETE & CMU) – SEE DETAIL 8 & 11/A5.2 FOR FORM TIE
2. CMU, FINISH PER SPEC.
3. CAST IN PLACE ROOF / FLOOR – SMOOTH FINISH (NON-SLIP FINISH AT FLOORS)
4. GRAFFITI COATING TYPICAL
5. ROOF DRAIN & OVERFLOW PER PLAN
6. COPPER FASCIA – SEE DETAIL 2 & 5 /A5.1
7. WINDOW / DOOR SYSTEM FRAMES PER SCHEDULE & SPEC.
7A. ALUMINUM FRAME WINDOW SYSTEM, SEE WINDOW SCHED.
7B. SINGLE GLAZED WINDOWS, BUTT JOINT
8. BUILDING ADDRESS NUMBER PER SPECS. AND 8/A5.4 SIM.
9. EXTERIOR GUARDRAIL, SEE DETAIL 6, 8, 13/A5.2
10. OVERHEAD DOOR, PER DOOR SCHED.
11. LIGHT FIXTURE PER ELECTRICAL DWG'S.
12. BUILDING SIGNAGE – SEE DETAIL 9/A5.4
13. FINISHED GRADE
14. EXPOSED CONCRETE OR CMU BLOCK– SEALED PER SPEC.
15. GYP. BOARD SOFFIT / CEILING, SEE SCHEDULE.
16. HVAC EQUIPMENT / DUCTS, PER MECHANICAL DWG'S.
17. DOOR LOUVER – SEE MECH. DWGS.
18. BATT INSULATION: ROOF = R30 MIN., EXT. WALLS ARE 8" CONCRETE (NO INSULATION)
19. PLYWOOD SHEATHING PER STRUCT. DWG'S.
20. FRAMING PER STRUCT. DWG'S.
21. GYP. BOARD, & FINISH PER SCHEDULE
22. HIGH PERFORMANCE BLANKET INSULATION
23. CONCRETE FOUNDATION / SLAB PER STRUCT. DWG'S.
24. EROSION CONTROL MAT PER CIVIL
25. CEILING JOISTS – SEE STRUCTURAL
26. MEMBRANE ROOF OVER FIBERGLASS MAT GYPSUM ROOF BOARD, PER SPECS.
27. CABINETRY / COUNTER, SEE INTERIOR ELEVATIONS
28. CONCRETE SPLASH BLOCK – SEE DETAIL 1/A5.2
29. MECHANICAL LOUVER, PER MECHANICAL DWG'S & 2/A5.2
30. COPPER ROOF DRAIN/OVERFLOW OUTLET SPOUT. SEE DETAIL 29/A5.1 SIM. SEE PLUMBING FOR TYP. OF DRAIN
31. HOOD EXHAUST PER MECHANICAL DRAWINGS. FLASHING
32. ACCESSIBLE BUILDING ENTRANCE IDENTIFICATION SIGN. SEE DTL. 8/A5.0
33. FIRE ALARM BELL LOCATION
34. FREE STANDING CONC. WALL
35. DOOR ACCESS KEYPAD MOUNTED AT ACCESSIBLE HEIGHT, 4'-0" A.F.F. – SEE ELECTRICAL DRAWINGS.
36. TAPERED INSULATION, PER ROOF PLAN AND SPECS. – ALSO SEE 8/A5.1
37. METAL STAIR W/ CONCRETE TREADS
38. SPRINKLER, PER ELECTRICAL
39. LOCKERS PER SPECS.
40. CONCRETE FLATWORK – 5" THICK WITH #3 AT 18" O.C.E.W., TYP. OVER COMPACTED BASE – NATURAL GRAY CONCRETE WITH LIGHT BROOM FINISH, TYP. – SLOPE AWAY FROM BUILDING
41. CONCRETE SLAB OVER SAND BASE OVER STRUCTURAL SLAB – SEE STRUCTRAL DWG'S
42. HOSE BIB BOX PER PLUMBING DWG'S
43. SAND BED FOR PLUMBING PIPES & CONDUITS
44. ROOF ACCESS LADDER AND HATCH – SEE DETAIL 3/A5.1
45. RESCUE DAVNEY BED PER SPECS
46. BINOCULAR CEILING MOUNT – SEE DETAIL 8/A5.4
47. CEMENT FIBER BOARD SOFFIT
48. TYPICAL CONCRETE CURB PER SEE STRUCTURAL – SEE DETAIL 14/A5.2
49. 1/2" ALUM. 'T' REVEAL REGLET BY 'PRYREGLET', TDM-TDU-625-75, WHERE GYPSUM BOARD MEETS CONCRETE WALL/CEILING, – DO NOT PAINT – SEE SEE DETAIL 20/A5.2
50. SUSPENDED ACOUSTICAL CEILING TILE – PER SPECS
51. FLOW-THROUGH PLANTER. BIO-RETENTION SOIL OVER 6" GRAVEL BED W/ PERFORATED PIPE – DISCHARGE THROUGH WEEP HOLES – SEE CIVIL DWGS.
52. FIRE RISER – SEE CIVIL & PLUMBING FOR CONTINUATION
53. GARAGE DOOR OPERATOR AND MOULDY
54. WINDOW ROLLER SHADE PER SPECS (RECESSED U.N.O.) – SEE DETAIL 19/A5.4
55. BELOW GRADE WATERPROOFING – SEE DETAIL 8/ A5.6
56. LINE INSIDE OF ALL PLANTER WALLS AND FLOOR WITH WATERPROOFING MEMBRANE PER SPECS – TERMINATE WITH COPPER FLASHING AT TOP, SIMILAR TO DETAIL 8/A5.6
57. 2x6 WEEP HOLE OPENING FOR BIO-RETENTION PLANTER DRAINAGE
58. 'T' REVEAL – (PRY REGLET PDM-.375-V-50 AT OUTSIDE PERIMETER & FCP-J CHANNEL AT INSIDE PERIMETER)
59. 12" HIGH WOOD FRAMED PLANTER – SEE DETAIL 8 & 12/A5.2
60. TYPICAL VERTICAL COPPER SEAM – SEE DETAIL 2 & 5/A5.1 AND 10/A5.6
61. TOP OF PARAPET SHALL BE ANGLED 45° – SEE DETAIL 18/A5.1
62. CONCRETE PANEL JOINTS – SEE SHEET A2.1

Elevation / Section Notes

1. CONFIRM WITH ARCHITECT LOCATION OF EXPOSED CONDUIT OR SURFACE MOUNTED BOXES, PRIOR TO INSTALLATION.
2. THE HIGHEST POINT OF THE ROOF, EQUIPMENT, OR ANY VENT, PIPE, ANTENNA OR OTHER PROJECTION SHALL NOT EXCEED 30 FEET ABOVE GRADE.
3. TYPICAL FOR PANEL LAYOUT, SEE SHEET A2.1

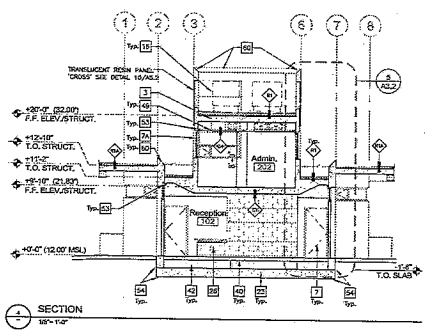

4 SECTION 1/8"=1'-0"

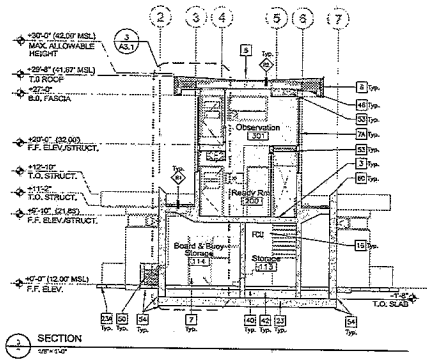

2 SECTION 1/8"=1'-0"

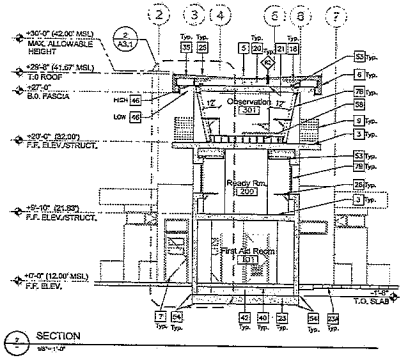

3 SECTION 1/8"=1'-0"

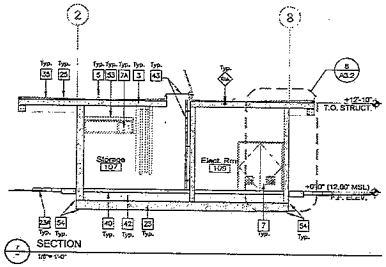

7 SECTION 1/8"=1'-0"

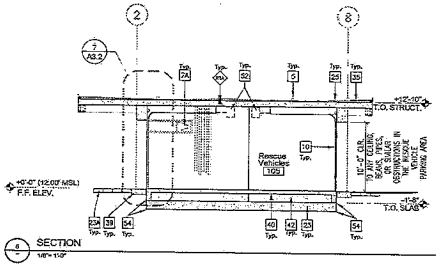

6 SECTION 1/8"=1'-0"

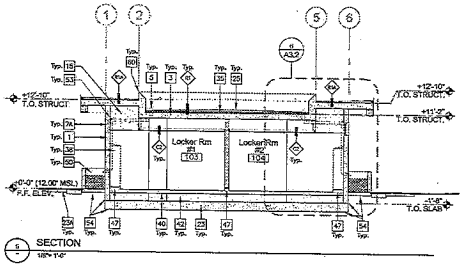

5 SECTION 1/8"=1'-0"

A-11

Davney Associates Architecture & Communities
3150 West Washington, Suite 303
San Diego, California 92110
tel 619.692.9293
fax 619.692.9393
davneyassociates.com

SPEC. NO. 8147

REGISTERED ARCHITECT — DAVNEY ASSOCIATES — No. C-19117 — REN 8.30.15 — STATE OF CALIFORNIA

PLANS FOR THE CONSTRUCTION OF

South Mission Beach Lifeguard Station

Building Sections — A3.0

CITY OF SAN DIEGO, CALIFORNIA
ENGINEERING & CAPITAL PROJECTS
ARCHITECTURAL, ENGINEERING & CONSTRUCTION DIVISION
SHEET 29 OF 34 SHEETS

WBS S-00791

APPROVED: FOR CITY ENGINEER — DATE 10/13/2014

SUBMITTED BY: JOHN SLOMAN, PROJECT MANAGER

DESCRIPTION	BY	APPROVED	DATE	FILED
ORIGINAL	WH/TT			

YOUSIF BENYAMIN, PROJECT ENGINEER
215-1693
CDS27 COORDINATES
1858-6253
CDM3 COORDINATES

CONTRACTOR _____ DATE STARTED _____
INSPECTOR _____ DATE COMPLETED _____

32849-29-D

Property of Davney Associates Architecture & Communities and copyrighted by Davney Associates Architecture. All rights reserved. Unauthorized reproduction is prohibited by common law and copyright.
© COPYRIGHT Date: 10, 2014 at 8:05 AM

South Mission Beach Lifeguard Station
San Diego, California

Building Envelope Insulation

ROOF INSULATION:

FIRST LEVEL: (ABOVE LOCKER ROOMS)
(5-LAYERS (2.5") OF HIGH PERFORMANCE BUILDING INSULATION BLANKET (R24) + 1/2" TAPERED RIGID INSULATION (R6) = R30 TOTAL

SECOND LEVEL: (UNDER MECHANICAL)
(9-LAYERS (2.5") OF HIGH PERFORMANCE BUILDING INSULATION BLANKET (R24) + 1/2" TAPERED RIGID INSULATION (R6) = R30 TOTAL

OBSERVATION LEVEL: (UPPER ROOF)
5" BATT (R25) + 1/2" TAPERED RIGID INSULATION (R6) = R31 TOTAL

WALL INSULATION: 3 5/8" BATT INSULATION (R13)

Elevation / Section Keyed Notes

1. CAST IN PLACE CONCRETE – SMOOTH TEXTURED FINISH PER SPECIFICATIONS (SEAL ALL EXPOSED CONCRETE & CMU) – SEE DETAIL 8 & 11/A5.2 FOR FORM TIE
2. CMU, FINISH PER SPEC.
3. CAST IN PLACE ROOF / FLOOR – SMOOTH FINISH (NON-SLIP FINISH AT FLOORS)
4. GRAFFITI COATING TYPICAL
5. ROOF DRAIN & OVERFLOW PER PLAN
6. COPPER FASCIA – SEE DETAIL 2 & 5 /A5.1
7. WINDOW / DOOR SYSTEM FRAMES PER SCHEDULE & SPEC.

7A. ALUMINUM FRAME WINDOW SYSTEM, SEE WINDOW SCHED.
7B. SINGLE GLAZED WINDOWS, BUTT JOINT
8. BUILDING ADDRESS NUMBER PER SPECS. AND 9/A5.4 SIM.
9. EXTERIOR GUARDRAIL SEE DETAIL 6, 9, 13/A5.2
10. OVERHEAD DOOR, PER DOOR SCHED.
11. LIGHT FIXTURE PER ELECTRICAL DWG'S.
12. BUILDING SIGNAGE – SEE DETAIL 9/A5.4
13. FINISHED GRADE
14. EXPOSED CONCRETE OR CMU BLOCK– SEALED PER SPEC.
15. GYP. BOARD SOFFIT / CEILING, SEE SCHEDULE.
16. HVAC EQUIPMENT / DUCTS. PER MECHANICAL DWG'S.
17. DOOR LOUVER – SEE MECH. DWGS.
18. BATT INSULATION: ROOF = R30 MIN., EXT. WALLS ARE 6" CONCRETE (NO INSULATION)
19. PLYWOOD SHEATHING PER STRUCT. DWG'S.
20. FRAMING PER STRUCT. DWG'S.
21. GYP. BOARD, & FINISH PER SCHEDULE
22. HIGH PERFORMANCE BLANKET INSULATION
23. CONCRETE FOUNDATION / SLAB PER STRUCT. DWG'S.
24. EROSION CONTROL MAT PER CIVIL
25. CEILING JOISTS – SEE STRUCTURAL
26. MEMBRANE ROOF OVER FIBERGLASS MAT GYPSUM ROOF BOARD, PER SPECS
27. CABINETRY / COUNTER, SEE INTERIOR ELEVATIONS
28. CONCRETE SPLASH BLOCK – SEE DETAIL 1/A5.2
29. MECHANICAL LOUVER, PER MECHANICAL DWG'S & 2/A5.2
30. COPPER ROOF DRAIN/OVERFLOW OUTLET SPOUT. SEE DETAIL 20/A5.1 SIM. SEE PLUMBING FOR TYPE OF DRAIN
31. HOOD EXHAUST PER MECHANICAL DRAWINGS. FLASHING
32. ACCESSIBLE BUILDING ENTRANCE IDENTIFICATION SIGN. SEE DTL. 6/A5.0
33. FIRE ALARM BELL LOCATION
34. FREE STANDING CONC. WALL
35. DOOR ACCESS KEYPAD MOUNTED AT ACCESSIBLE HEIGHT. 4'-0" A.F.F. – SEE ELECTRICAL DRAWINGS.
36. TAPERED INSULATION, PER ROOF PLAN AND SPECS – ALSO SEE 6/A5.1
37. METAL STAIR W/ CONCRETE TREADS
38. SPEAKER, PER ELECTRICAL
39. LOCKERS PER SPECS.
40. CONCRETE FLATWORK – 5" THICK WITH #3 AT 18" O.C.E.W., TYP. OVER COMPACTED BASE – NATURAL GRAY CONCRETE WITH LIGHT BROOM FINISH, TYP. – SLOPE AWAY FROM BUILDING
41. CONCRETE SLAB OVER SAND BASE OVER STRUCTURAL SLAB – SEE STRUCTRAL DWG'S
42. HOSE BIB BOX PER PLUMBING DWG'S
43. SAND BED FOR PLUMBING PIPES & CONDUITS
44. ROOF ACCESS LADDER AND HATCH – SEE DETAIL 3/A5.1
45. RESCUE GURNEY BED PER SPECS
46. BINOCULAR CEILING MOUNT – SEE DETAIL 8/A5.4
47. CEMENT FIBER BOARD SOFFIT
48. TYPICAL CONCRETE CURB PER SEE STRUCTURAL – SEE DETAIL 14/A5.2
49. 1/2" ALUM. 'T' REVEAL REGLET BY 'PERMAGLEET' TDM-TEM-625-75, WHERE GYPSUM BOARD MEETS CONCRETE WALL/CEILING. – DO NOT PAINT – SEE SEE DETAIL 20/A5.2
50. SUSPENDED ACOUSTICAL CEILING TILE – PER SPECS
51. FLOW-THROUGH PLANTER; BIO-RETENTION SOIL OVER 6" GRAVEL BED W/ PERFORATED PIPE – DISCHARGE THROUGH WEEP HOLES – SEE CIVIL DWGS.
52. FIRE RISER – SEE CIVIL & PLUMBING FOR CONFIRMATION
53. GARAGE DOOR OPERATOR AND TROLLEY
54. WINDOW ROLLER SHADE PER SPECS (RECESSED U.N.O.) – SEE DETAIL 19/A5.4
55. BELOW GRADE WATERPROOFING – SEE DETAIL 8/ A5.6
56. LINE INSIDE OF ALL PLANTER WALLS AND FLOOR WITH WATERPROOFING MEMBRANE PER SPECS – TERMINATE WITH COPPER FLASHING AT TOP, SIMILAR TO DETAIL 8/A5.6
57. 2x4 WEEP HOLE OPENING FOR BIO-RETENTION PLANTER DRAINAGE
58. 'T' REVEAL – (TRY REGLET FDN-375-V-50 AT OUTSIDE PERIMETER & FCP-J CHANNEL AT INSIDE PERIMETER)
59. 12" HIGH WOOD FRAMED PLATFORM – SEE DETAIL 8 & 12/A5.7
60. TYPICAL VERTICAL COPPER SEAM – SEE DETAIL 2 & 5/A5.1 AND 10/A5.6
61. TOP OF PARAPET SHALL BE ANGLED 45° – SEE DETAIL 18/A5.1
62. CONCRETE PANEL JOINTS – SEE SHEET A2.1

Elevation / Section Notes

1. CONFIRM WITH ARCHITECT LOCATION OF EXPOSED CONDUIT OR SURFACE MOUNTED BOXES, PRIOR TO INSTALLATION
2. THE HIGHEST POINT OF THE ROOF, EQUIPMENT, OR ANY VENT, PIPE, ANTENNA OR OTHER PROJECTION SHALL NOT EXCEED 30 FEET ABOVE GRADE
3. TYPICAL – FOR PANEL LAYOUT, SEE SHEET A2.1

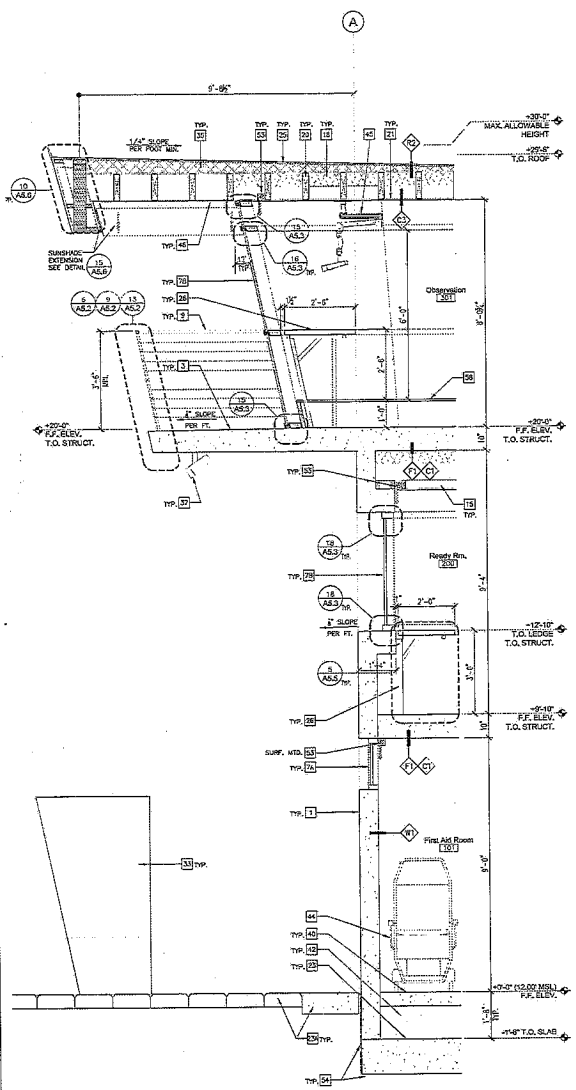

1 WALL SECTION
1/2" = 1'-0"

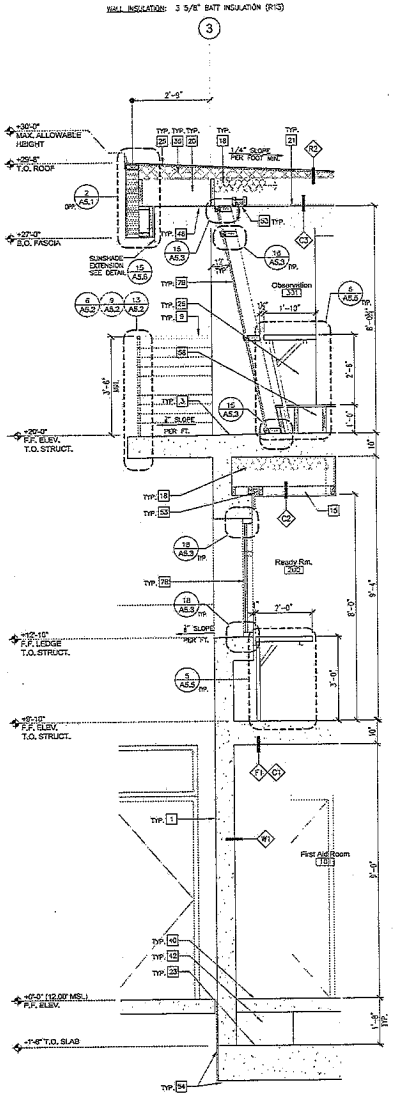

2 WALL SECTION
1/2" = 1'-0"

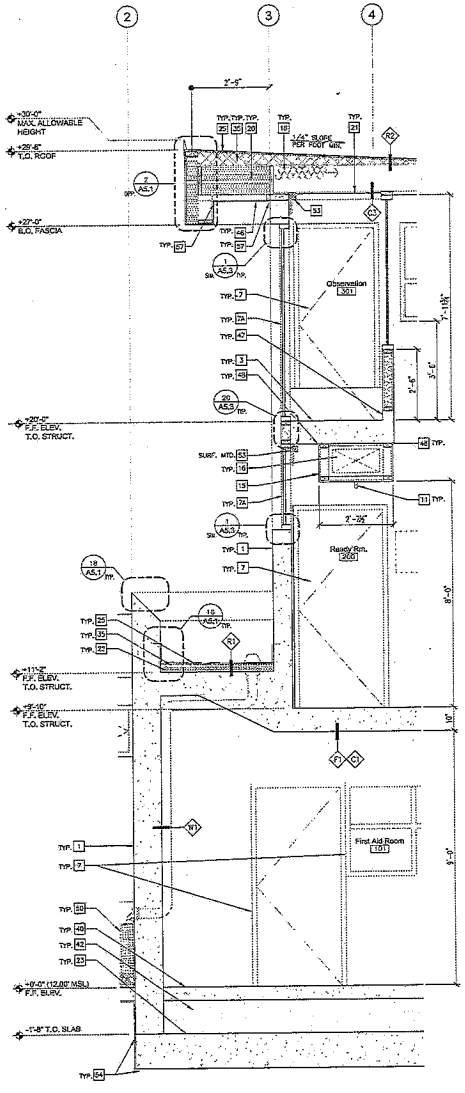

3 WALL SECTION
1/2" = 1'-0"

Stanley + Associates Architecture © dsmarch.com
2160 West Washington, Suite 302
San Diego, California 92110
Tel 619.692.9393
Fax 619.692.9394
dsmarch.com

SPEC. NO. 8147

LICENSED ARCHITECT REGISTERED PROFESSIONAL No. C-21113 REN. 8.30.15 STATE OF CALIFORNIA

PLANS FOR THE CONSTRUCTION OF
South Mission Beach Lifeguard Station

Wall Sections — A3.1

CITY OF SAN DIEGO, CALIFORNIA
ENGINEERING & CAPITAL PROJECTS
ARCHITECTURAL ENGINEERING & CONTRACTS DIVISION
SHEET 30 OF 54 SHEETS

WBS S-00791

FOR CITY ENGINEER — DATE 10/13/2014

SUBMITTED BY: JAMES STEWART, PROJECT MANAGER

DESCRIPTION	BY	APPROVED	DATE	FILMED
ORIGINAL	KM/TT			

YOUSIF BENYAMIN, PROJECT ENGINEER
218-1693
COORD COORDINATES
1656-6253
COORD COORDINATES

CONTRACTOR _____ DATE STARTED _____
INSPECTOR _____ DATE COMPLETED _____

32849-30-D

A-12

Page 38 of 102

South Mission Beach Lifeguard Station
San Diego, California

Proprietary design. These drawings and designs are protected by common law copyright. All protected by applicable codes and regulations with Stanley + Associates Architecture © dsmarch.com and LLP and the law property of Stanley + Associates Architecture © dsmarch.com and LLP
© COPYRIGHT October 29, 2014 at 8:45AM

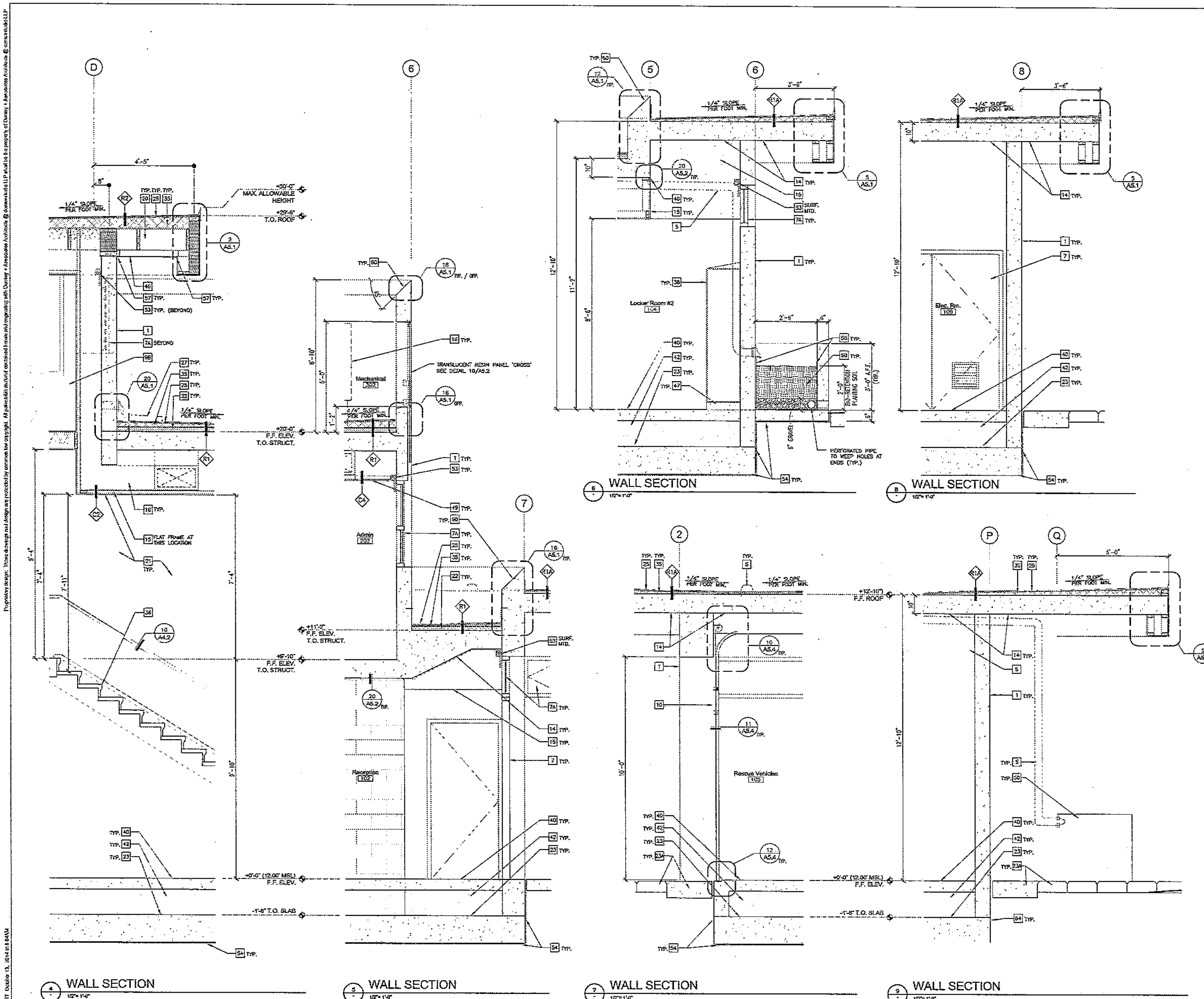

Elevation / Section Keyed Notes

1	CAST IN PLACE CONCRETE - SMOOTH TEXTURED FINISH PER SPECIFICATIONS (SEAL ALL EXPOSED CONCRETE & CMU) - SEE DETAIL 8 & 11/A5.2 FOR FORM TIE
2	CMU, FINISH PER SPEC.
3	CAST IN PLACE ROOF / FLOOR - SMOOTH FINISH (NON-SLIP FINISH AT FLOORS)
4	GRAFFITI COATING TYPICAL
5	ROOF DRAIN & OVERFLOW PER PLAN
6	COPPER FASCIA - SEE DETAIL 2 & 5 /A5.1
7	WINDOW / DOOR SYSTEM FRAMES PER SCHEDULE & SPEC.
7A	ALUMINUM FRAME WINDOW SYSTEM, SEE WINDOW SCHED.
7B	SINGLE GLAZED WINDOWS, BUTT JOINT
8	BUILDING ADDRESS NUMBER PER SPECS. AND 9/A5.4 SIM.
9	EXTERIOR GUARDRAIL. SEE DETAIL 6, 9, 13/A5.2
10	OVERHEAD DOOR, PER DOOR SCHED.
11	LIGHT FIXTURE PER ELECTRICAL DWG'S.
12	BUILDING SIGNAGE - SEE DETAIL 9/A5.4
13	FINISHED GRADE
14	EXPOSED CONCRETE OR CMU BLOCK- SEALED PER SPEC.
15	GYP. BOARD SOFFIT / CEILING, SEE SCHEDULE
16	HVAC EQUIPMENT / DUCTS. PER MECHANICAL DWG'S.
17	DOOR LOUVER - SEE MECH. DWGS.
18	BATT INSULATION: ROOF = R30 MIN., EXT. WALLS ARE 8" CONCRETE (NO INSULATION)
19	PLYWOOD SHEATHING PER STRUCT. DWG'S.
20	FRAMING PER STRUCT. DWG'S.
21	GYP. BOARD. & FINISH PER SCHEDULE
22	HIGH PERFORMANCE BLANKET INSULATION
23	CONCRETE FOUNDATION / SLAB PER STRUCT. DWG'S.
23A	ERROSION CONTROL MAT PER CIVIL
24	CEILING JOISTS - SEE STRUCTURAL
25	MEMBRANE ROOF OVER FIBERGLASS MAT GYPSUM ROOF BOARD, PER SPECS.
26	CABINETRY / COUNTER, SEE INTERIOR ELEVATIONS
27	CONCRETE SPLASH BLOCK - SEE DETAIL 1/A5.2
28	MECHANICAL LOUVER, PER MECHANICAL DWG'S & 2/A5.2
29	COPPER ROOF DRAIN/OVERFLOW OUTLET SPOUT. SEE DETAIL 20/A5.1 SIM. SEE PLUMBING FOR TYPE OF DRAIN
30	HOOD EXHAUST PER MECHANICAL DRAWINGS, FLASHING
31	ACCESSIBLE BUILDING ENTRANCE IDENTIFICATION SIGN: SEE DTL. 6/A5.0
32	FIRE ALARM BELL LOCATION
33	FREE STANDING CONC. WALL
34	DOOR ACCESS KEYPAD MOUNTED AT ACCESSIBLE HEIGHT, 4'-0" A.F.F. - SEE ELECTRICAL DRAWINGS.
35	TAPERED INSULATION, PER ROOF PLAN AND SPECS - ALSO SEE 8/5.1
36	METAL STAIR W/ CONCRETE TREADS
37	SPEAKER, PER ELECTRICAL
38	LOCKERS PER SPECS.
39	CONCRETE FLATWORK - 5" THICK WITH #3 AT 18" O.C.E.W., TYP. OVER COMPACTED BASE - NATURAL GRAY CONCRETE WITH LIGHT BROOM FINISH, TYP. - SLOPE AWAY FROM BUILDING
40	CONCRETE SLAB OVER SAND BASE OVER STRUCTURAL SLAB - SEE STRUCTRAL DWG'S
41	HOSE BIB BOX PER PLUMBING DWG'S
42	SAND BED FOR PLUMBING PIPES & CONDUITS
43	ROOF ACCESS LADDER AND HATCH - SEE DETAIL 3/A5.1
44	RESCUE GURNEY BED PER SPECS
45	BINOCULAR CEILING MOUNT - SEE DETAIL 8/A5.4
46	CEMENT FIBER BOARD SOFFIT
47	TYPICAL CONCRETE CURB PER SEE STRUCTURAL - SEE DETAIL 14/A5.2
48	1/2" ALUM. "T" REVEAL REGLET BY "FRYREGLET": TDM-TDM-625-75, WHERE GYPSUM BOARD MEETS CONCRETE WALL/CEILING, - DO NOT PAINT - SEE SEE DETAIL 20/A5.2
49	SUSPENDED ACOUSTICAL CEILING TILE - PER SPECS
50	FLOW-THROUGH PLANTER: BIO-RETENTION SOIL OVER 6" GRAVEL BED W/ PEFORATED PIPE - DISCHARGE THROUGH WEEP HOLES - SEE CIVIL DWGS.
51	FIRE RISER - SEE CIVIL & PLUMBING FOR CONTINUATION
52	GARAGE DOOR OPERATOR AND TROLLEY
53	WINDOW ROLLER SHADE PER SPECS (RECESSED U.N.O.) - SEE DETAIL 19/A5.4
54	BELOW GRADE WATERPROOFING - SEE DETAIL 8/ A5.6
55	LINE INSIDE OF ALL PLANTER WALLS AND FLOOR WITH WATERPROOFING MEMBRANE PER SPECS - TERMINATE WITH COPPER FLASHING AT TOP, SIMILAR TO DETAIL 8/A5.6
56	2x4 WEEP HOLE OPENING FOR BIO-RETENTION PLANTER DRAINAGE
57	"F" REVEAL - (FRY REGLET FDM-375-V-50 AT OUTSIDE PERIMETER & FCP-J CHANNEL AT INSIDE PERIMETER)
58	12" HIGH WOOD FRAMED PLATFORM - SEE DETAIL 9 & 12/A5.7
59	TYPICAL VERTICAL COPPER SEAM - SEE DETAIL 2 & 5/A5.1 AND 10/A5.6
60	TOP OF PARAPET SHALL BE ANGLED 45° - SEE DETAIL 18/A5.1
61	CONCRETE PANEL JOINTS - SEE SHEET A2.1

Elevation / Section Notes

1. CONFIRM WITH ARCHITECT LOCATION OF EXPOSED CONDUIT OR SURFACE MOUNTED BOXES, PRIOR TO INSTALLATION.
2. THE HIGHEST POINT OF THE ROOF, EQUIPMENT, OR ANY VENT, PIPE, ANTENNA OR OTHER PROJECTION SHALL NOT EXCEED 30 FEET ABOVE GRADE.
3. TYPICAL: FOR PANEL LAYOUT, SEE SHEET A2.1

A-13

South Mission Beach Lifeguard Station
San Diego, California

Domusy + Associates Architects @ domusstudio
2150 West Washington, Suite 303
San Diego, California 92110
Tel 619.692.9393
Fax 619.692.9394
domusstudio.com

SPEC. NO. 8147

LICENSED ARCHITECT WAYNE HOLTAN No. C12113 REN 9.30.15 STATE OF CALIFORNIA

PLANS FOR THE CONSTRUCTION OF
South Mission Beach Lifeguard Station

Wall Sections A3.2

CITY OF SAN DIEGO, CALIFORNIA
ENGINEERING & CAPITAL PROJECTS
ARCHITECTURAL ENGINEERING & CONTRACTS DIVISION
SHEET 31 OF 94 SHEETS

WBS S-00791

APPROVED: FOR CITY ENGINEER — DATE 10/13/2014

SUBMITTED BY: JIHAD SLEIMAN, PROJECT MANAGER

DESCRIPTION	BY	APPROVED	DATE	FILMED
ORIGINAL	WH/TT			

YOUSIF BENYAMIN, PROJECT ENGINEER
218-1693 CCS27 COORDINATES
1858-6253 CCS83 COORDINATES

CONTRACTOR ______ DATE STARTED ______
INSPECTOR ______ DATE COMPLETED ______

32849-31-D

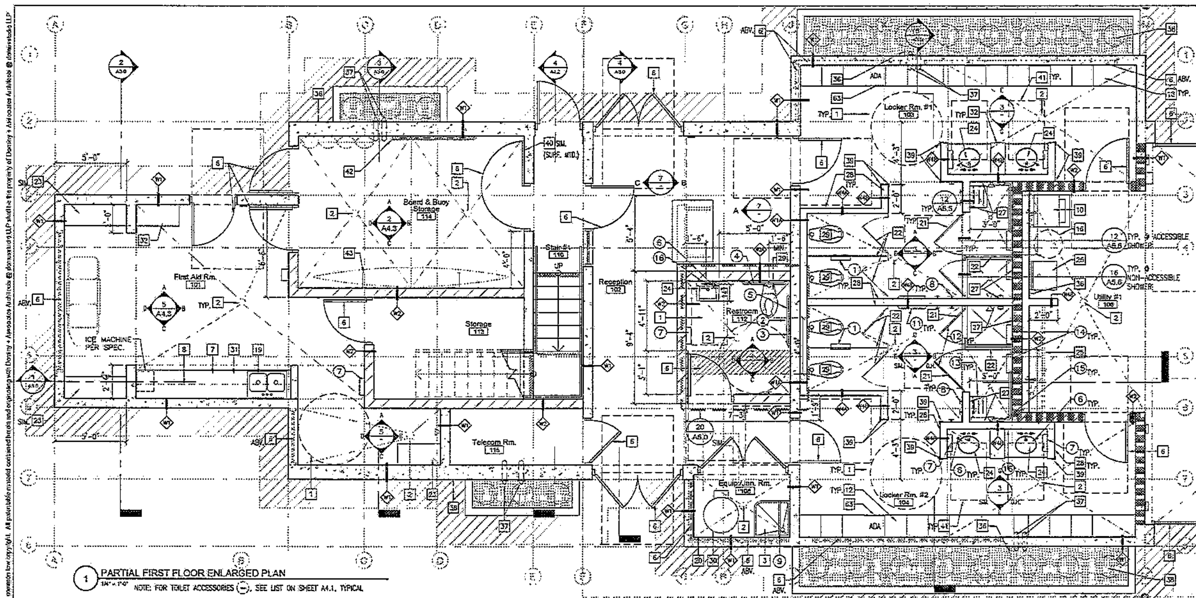

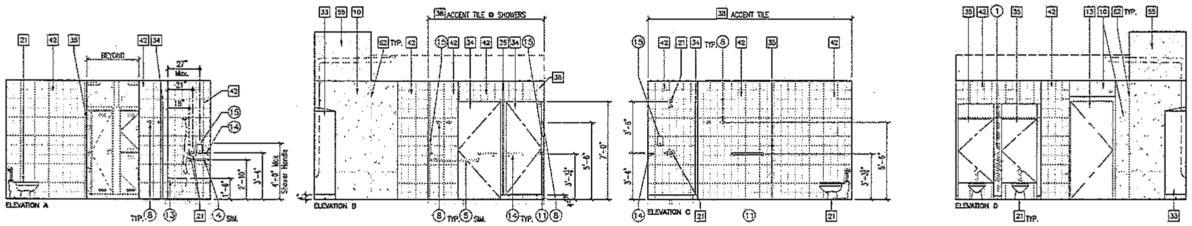

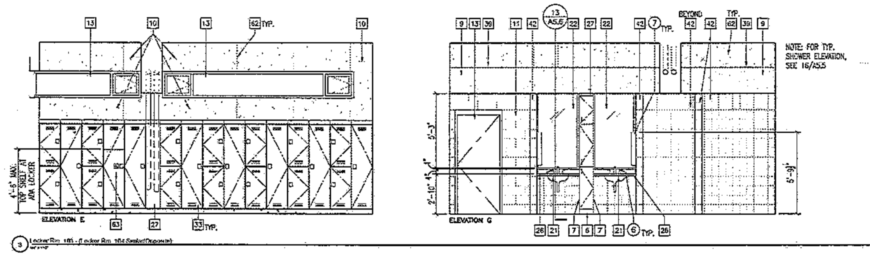

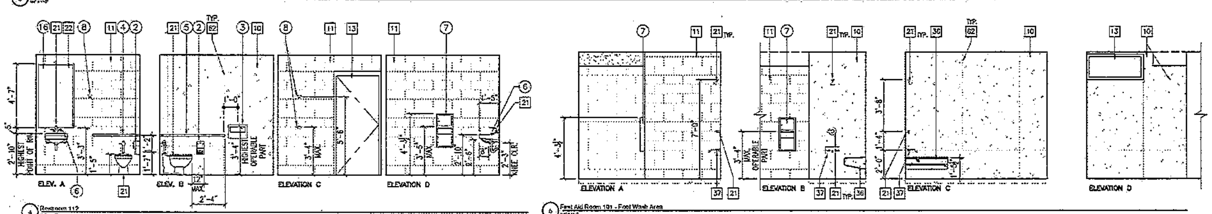

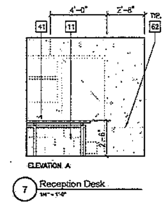

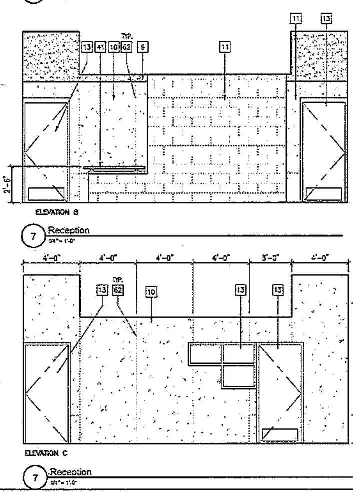

Plan Keyed Notes

1. 5'-0" DIA. HANDICAPPED TURNING RADIUS
2. DRAIN – SEE PLUMBING PLANS AND DETAIL 19/A5.1
3. MOP SINK – SEE PLUMBING PLANS
4. SURFACE MOUNTED LIGHT – SEE ELECTRICAL PLANS
5. TILE – SEE FINISH SCHEDULE
6. WINDOW / DOOR – PER SCHEDULE.
7. LOWER CABINETS PER DETAILS 14/A5.5
8. UPPER CABINETS PER DETAIL 13/A5.5
9. COUNTERTOP – SEE DETAILS ON SHEET A5.5
10. ELECTRIC WASHER & DRYER. SEE PLUMBING PLANS & SPECIFICATIONS
11. BUILT-IN SHELF
12. LOCKERS PER SPECS.
13. REFRIGERATOR SPACE. PROVIDE WATER & POWER.
14. COMBINATION TYPE II EXHAUST HOOD & MICROWAVE OVEN SEE SPECS. & ELECTRICAL DV
15. GARBAGE DISPOSAL UNDERSINK. PROVIDE POWER & SWITCH
16. CENTRIFUGAL DRYER BY OWNER
17. UNDER COUNTER DISHWASHER PER SPECIFICATIONS. VERIFY DISHWASHER CLEARANCES. S INTERIOR ELEVATIONS.
18. SLIDE-IN ELECTRIC RANGE W/ TYPE II HOOD ABOVE (400 CFM). SEE SPECS. & INSTALL MANUFACTURER'S INSTRUCTIONS.
19. SEAMLESS STAINLESS STEEL SINK PER SPEC. HOOK-UP PER PLUMBING PLANS.
20. MECHANICAL SHAFT – SEE TYPICAL DETAIL 6/A7.4
21. SHOWER DOOR PER SPEC.
22. TOILET & SHOWER PARTITIONS PER SPEC.
23. CONCRETE SEAT @ FOOT WASH, PER DETAIL 17/A5.2
24. SINK, PER PLUMBING PLANS
25. 2" DIA. GALV. PIPE FOR HANGING WET SUITS
26. UTILITY SINK, PER PLUMBING
27. WALL TILE FOR SHOWER (2 SIDES – TYP.) – SEE DETAIL 16/A5.5
28. FRP FROM FLOOR TO CEILING, TYP.
29. TOILET PER PLUMBING
30. WATER HEATER PER PLUMBING
31. STAINLESS STEEL COUNTERTOP – SEE DETAIL 14/A5.5, SIM.
32. FULL HEIGHT CABINET – SEE DETAIL 7/A5.4
33. CAST-IN-PLACE FLOOR DECK
34. GUARDRAIL – SEE DETAIL
35. TV MOUNTING ARM PER SPECS.
36. HOSE BIB BOX PER PLUMBING DWG'S
37. COPPER ROOF DRAIN/OVERFLOW OUTLET SPOUT. SEE DETAIL 20/A5.1 SIM. SEE PLUMBING TYPE OF DRAIN
38. FLOW-THROUGH PLANTER: BIO-RETENTION SOIL OVER 6" GRAVEL BED W/ PEFORATED PI DISCHARGE THROUGH WEEP HOLES – SEE CIVIL DRAWINGS
39. CORNER GUARD PER SPEC – SEE DETAIL 5/A5.4
40. ELECTROMAGNETIC DOOR HOLD – SEE DETAIL 1/A5.6
41. 30"x48" CLEAR FLOOR SPACE
42. SWIM FINS RACK – HORIZ. PIPE BARS. MOUNT TO CONC. WALL SEE 2/A4.3 & 5/A5.7
43. WALL RACK FOR RESCUE BOARDS, SEE DETAIL 2/A5.7

Notes

1. FOR RESTROOM #112: SEE DETAILS ON SHEET A5.0 FOR TYPICAL ACCESSIBILITY NOTES AND DETAIL 20/A5.0
2. SEE SHEET 14/A5.0 & 10/A5.0 FOR WALL AND DOOR SIGNAGE AT RESTROOMS.
3. SEE SHEET 8/A5.0 FOR GRAB BAR DETAIL.
4. SEE SHEET A4.1 FOR RESTROOM ACCESSORY LEGEND (–)

Int. Elevation Keyed Notes

1. BUILT-IN CABINETS PER DETAILS 13/A5.5 & 14/A5.5, FOR FULL HT. CAB SEE DETAIL 7/A5.4
2. PANTRY STORAGE
3. ADJUSTABLE SHELVES, TYP.
4. SLIDE IN ELECTRIC RANGE
5. TYPE II HOOD/MICROWAVE (400 CFM) PER SPECIFICATIONS. ROUTE HOOD EXHAUST THRU WALL. SEE MECHANICAL PLANS AND HOOD MANUFACTURER'S RECOMMENDATIONS.
6. 4" KICK SPACE
7. END PANEL TO MATCH CABINET FRONTS
8. FIRE EXTINGUISHER LOCATION: SURFACE MOUNTED. REFER TO SPECS. FOR F.E., ALSO SEE DETAIL 2/A5.4 FOR RECESS MOUNTED (PER PLAN)
9. GYPSUM WALL BOARD PER FINISH SCHEDULE
10. CAST IN PLACE CONCRETE – SAND BLAST TEXTURED FINISHED PER SPEC.
11. MASONRY WALL, SEALED, TYP.– PER FINISH SCHEDULE & SPECS.
12. WORK COUNTER – SEE DETAILS ON SHEET A5.5
13. WINDOW / DOOR PER SCHEDULES
14. BREAK METAL
15. REFRIGERATORS PER SPEC.
16. BUILT-IN DESK – SEE 5/A5.5 SIM
17. ELECTRIC WASHER & DRYER, PROVIDE POWER. SEE SPECS & PLUMBING DWG'S. FOR HOOK-UP REQUIREMENTS.
18. MARKER BOARD, PER SPECIFICATIONS
19. MECHANICAL GRILLE, PER MECHANICAL DWG'S.
20. LIGHT FIXTURE, PER ELECT. DWG'S.
21. PLUMBING FIXTURE. SEE PLUMBING DWG'S. & SPEC'S.
22. MIRROR. SEE SPEC'S.
23. OVERHEAD DOOR TRACK, PER DOOR SCHEDULE
24. L.E.D. DISPLAY
25. PEGBOARD
26. COUNTERTOP PER FINISH SCHEDULE
27. FIXED FILLER PANEL TO MATCH CABINETS/LOCKERS WHERE APPLICABLE
28. HOSE BIB BOX PER PLUMBING DWG'S
29. CEILING MOUNTED ADJUSTABLE BINOCULAR RAIL PER SPEC
30. STEEL COLUMN PER STRUCTURAL – PAINTED
31. ALUMINUM HANDRAIL / GUARDRAIL PER DETAILS & SPECS.
32. STEEL STAIR W/ CONCRETE TREADS
33. LOCKERS PER SPEC.
34. SHOWER DOOR PER SPEC.
35. TOILET & SHOWER PARTITIONS PER SPEC.
36. CONCRETE SEAT PER DETAIL 17/A5.2
37. MOP SINK MIXING VALVES, SEE PLUMBING
38. FIELD TILE – PER FINISH SCHEDULE. SEE 16/A5.5 (FOR SHOWER ELEVATION)
39. 1/2" ALUM. "T" REVEAL REGLET BY "FRYREGLET": TDM-TDM-625-75, WHERE GYPSUM BOARD MEETS CONCRETE WALL/CEILING, – DO NOT PAINT – SEE SEE DETAIL 20/A5.2
40. VERTICAL COUNTER SUPPORTS – SEE 2/A4.1 FOR SPACING & 1/A5.5
41. RECEPTION DESK PER DETAIL 15/A5.5
42. FIELD TILE PER FINISH SCHEDULE
43. UNDER COUNTER DISHWASHER PER SPECIFICATIONS. VERIFY DISHWASHER CLEARANCES
44. WALL MOUNTED ROOF ACCESS LADDER, SEE DETAIL 13/A5.1
45. BUILT-IN PLATFORM
46. WALL MOUNTED UTILITY SINK PER PLUMBING DWG'S.
47. MEDICAL PAC PROVIDED BY OWNER HANGING SYSTEM PROVIDED AND INSTALLED BY CONTRACTOR
48. EXPOSED MECHANICAL DUCT PER MECH. DWGS. – PAINT MATTE BLACK
49. PROVIDE (12) GALV. J-HOOKS FOR HANGING BUOYS – REFER TO OWNER FOR LAYOUT
50. SWIM FINS RACK – HORIZ. PIPE BARS, MOUNT TO CONC. WALL SEE 2/A4.3 & 5/A5.7
51. 2" DIA. GALV. PIPE FOR HANGING WET SUITS
52. CENTRIFUGAL DRYER BY OWNER
53. FULL HT. LOCKABLE CABINET FOR RADIOS & CHARGERS W/ (4) ADJ. SHELVING AND LOUVERED DOORS – SEE DTL. 7/A5.4 SIM.
54A. ELECTRICAL OUTLET FOR RADIO CHARGERS (PER ELEC.)
54B. ELECTRICAL OUTLET W/ CABLE TV (PER ELEC)
55. GYP. BD. SOFFIT
56. ICE MAKER PER SPEC
57. SEAMLESS STAINLESS STEEL SINK PER SPEC. HOOK-UP PER PER PLUMBING PLANS. ALSO SEE DETAIL 18/A5.5
58. STAINLESS STEEL BACKSPLASH TO UNDERSIDE OF UPPER CABINETS
59. 12"(D) x 48"(L) VINYL COATED OPEN WIRE SHELVING W/ BRACKET SUPPORTS
60. WALL RACK FOR RESCUE BOARDS, SEE DETAIL 2/A5.7
61. 12" HIGH WOOD FRAMED PLATFORM – SEE DETAIL 8 & 12/A5.7
62. CONCRETE PANEL JOINT LOCATION
63. ACCESSIBLE LOCKER (1 TIER): PROVIDE RECESS HANDLE W/ LIFTING TRIGGER HARDWARE

Notes

1. FOR RESTROOM #112: SEE DETAILS ON SHEET A5.0 FOR TYPICAL ACCESSIBILITY NOTES AND DETAIL 20/A5.0
2. SEE SHEET 14/A5.0 & 10/A5.0 FOR WALL AND DOOR SIGNAGE AT RESTROOMS.
3. SEE SHEET 8/A5.0 FOR GRAB BAR DETAIL.
4. SEE SHEET A4.1 FOR RESTROOM ACCESSORY LEGEND (–)

NOTE

LOCKER ROOMS ARE STRICTLY FOR THE USE OF LIFEGUARD STAFF ONLY

A-14

Dominy + Associates Architects @ domusstudio
2150 West Washington, Suite 303
San Diego, California 92110
Tel 619.692.9393
Fax 619.692.9394
domusstudio.com

SPEC. NO 8147

LICENSED ARCHITECT – WAYNE HOLTAN – No. C12113 – REN 9.30.15 – STATE OF CALIFORNIA

PLANS FOR THE CONSTRUCTION OF

South Mission Beach Lifeguard Station

Enlarged Plan + Interior Elevations — A4.0

CITY OF SAN DIEGO, CALIFORNIA
ENGINEERING & CAPITAL PROJECTS
ARCHITECTURAL ENGINEERING & CONTRACTS DIVISION
SHEET 32 OF 94 SHEETS

WBS S-00791

APPROVED: FOR CITY ENGINEER — DATE 10/13/2014

SUBMITTED BY: JIHAD SLEIMAN, PROJECT MANAGER

DESCRIPTION	BY	APPROVED	DATE	FILMED
ORIGINAL	WH/TT			

YOUSIF BENYAMIN, PROJECT ENGINEER

218-1653 CCS27 COORDINATES

1858-6253 CCS83 COORDINATES

CONTRACTOR ______ DATE STARTED ______
INSPECTOR ______ DATE COMPLETED ______

32849-32-D

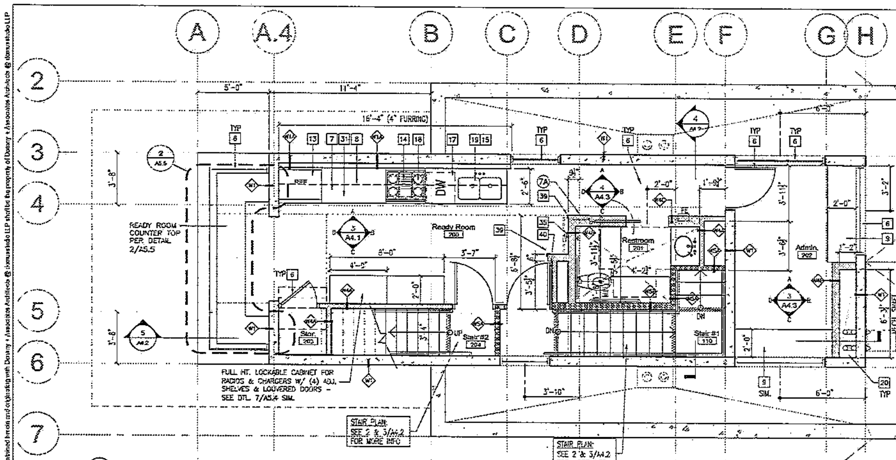

1 READY RM. 202, RESTROOM 201 AND WATCH RM. 203

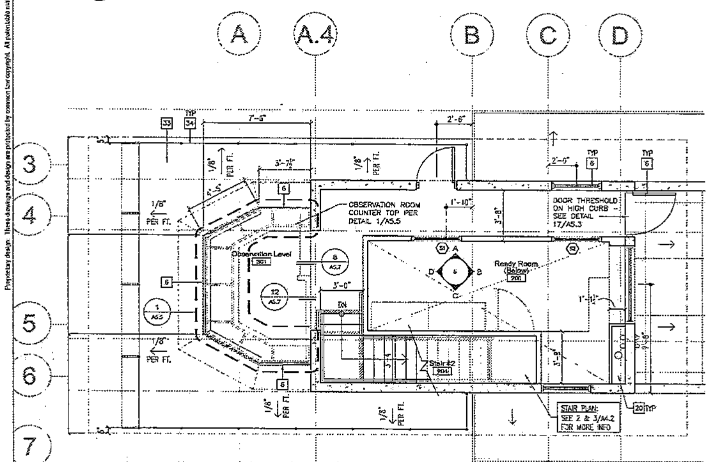

2 OBSERVATION LEVEL

Restroom Accessories

1	PARTITION MOUNTED 2 ROLL TOILET PAPER / SEAT COVER DISPENSER WITH NAPKIN DISPOSAL	MANUFACTURER: MODEL NO.:	BOBRICK B-3571
2	SURFACE MTD. MULTI-ROLL TOILET PAPER DISPENSER	MANUFACTURER: MODEL NO.:	BOBRICK B-2888
3	SURFACE MTD. SEAT COVER DISPENSER	MANUFACTURER: MODEL NO.:	BOBRICK B-221
4	36" HORIZONTAL STAINLESS STEEL HANDICAP GRAB BARS WITH SNAP FLANGES	MANUFACTURER: MODEL NO.:	BOBRICK B-6806 X 36
5	48" HORIZONTAL STAINLESS STEEL HANDICAP GRAB BARS WITH SNAP FLANGES	MANUFACTURER: MODEL NO.:	BOBRICK B-6806 X 48
6	LAVATORY/COUNTERTOP MOUNTED SOAP DISPENSER	MANUFACTURER: MODEL NO.:	BOBRICK B-8221
7	SURFACE MOUNTED PAPER TOWEL DISPENSER / WASTE RECEPTACLE	MANUFACTURER: MODEL NO.:	BOBRICK B-3699
7A	RECESSED PAPER TOWEL DISPENSER / WASTE RECEPTACLE	MANUFACTURER: MODEL NO.:	BOBRICK B-369
8	CLOTHES HOOK	MANUFACTURER: MODEL NO.:	BOBRICK B-6727
9	UTILITY SHELF WITH MOP / BROOM HOLDERS AND RAG HOOKS	MANUFACTURER: MODEL NO.:	BOBRICK B-224 X 30"
10	SHOWER SHELF CLAMPS	MANUFACTURER: MODEL NO.:	C.R. LAURANCE FA11
11	24" SURFACE MOUNTED TOWEL BAR	MANUFACTURER: MODEL NO.:	BOBRICK B-530 X 24
12	SHOWER DOOR (MIN. 36" CLR. ACCESSIBLE DOOR)	MANUFACTURER: MODEL NO.:	PER SPEC. PER SPEC.
13	SHOWER SEAT	MANUFACTURER: MODEL NO.:	BOBRICK B-5191
14	SHOWER SHELF	MANUFACTURER: MODEL NO.:	BOBRICK B-295-16
15	SHOWER SOAP DISPENSER	MANUFACTURER: MODEL NO.:	BOBRICK B-2111
16	CUSTOM SIZED MIRROR	MANUFACTURER: MODEL NO.:	BOBRICK B-290 CUSTOM SIZE

NOTE

LOCKER ROOMS ARE STRICTLY FOR THE USE OF LIFEGUARD STAFF ONLY

Plan Keyed Notes

1. 5'-0" DIA. HANDICAPPED TURNING RADIUS
2. DRAIN - SEE PLUMBING PLANS AND DETAIL 19/A5.1
3. MOP SINK - SEE PLUMBING PLANS
4. SURFACE MOUNTED LIGHT - SEE ELECTRICAL PLANS
5. TILE - SEE FINISH SCHEDULE
6. WINDOW / DOOR - PER SCHEDULE.
7. LOWER CABINETS PER DETAILS 14/A5.5
8. UPPER CABINETS PER DETAIL 13/A5.5
9. COUNTERTOP - SEE DETAILS ON SHEET A5.5
10. ELECTRIC WASHER & DRYER. SEE PLUMBING PLANS & SPECIFICATIONS
11. BUILT-IN SHELF
12. LOCKERS PER SPECS.
13. REFRIGERATOR SPACE. PROVIDE WATER & POWER.
14. COMBINATION TYPE II EXHAUST HOOD & MICROWAVE OVEN SEE SPECS. & ELECTRICAL DWG'S.
15. GARBAGE DISPOSAL UNDERSINK. PROVIDE POWER & SWITCH
16. CENTRIFUGAL DRYER BY OWNER
17. UNDER COUNTER DISHWASHER PER SPECIFICATIONS. VERIFY DISHWASHER CLEARANCES. SEE INTERIOR ELEVATIONS.
18. SLIDE-IN ELECTRIC RANGE W/ TYPE II HOOD ABOVE (400 CFM). SEE SPECS. & INSTALL PER MANUFACTURER'S INSTRUCTIONS
19. SEAMLESS STAINLESS STEEL SINK PER SPEC. HOOK-UP PER PLUMBING PLANS.
20. MECHANICAL SHAFT - SEE TYPICAL DETAIL 6/A7.4
21. SHOWER DOOR PER SPEC.
22. TOILET & SHOWER PARTITIONS PER SPEC.
23. CONCRETE SEAT @ FOOT WASH. PER DETAIL 17/A5.2
24. SINK, PER PLUMBING PLANS
25. 2" DIA. GALV. PIPE FOR HANGING WET SUITS
26. UTILITY SINK, PER PLUMBING
27. WALL TILE FOR SHOWER (2 SIDES - TYP.) - SEE DETAIL 16/A5.5
28. FRP FROM FLOOR TO CEILING, TYP.
29. TOILET PER PLUMBING.
30. WATER HEATER PER PLUMBING
31. STAINLESS STEEL COUNTERTOP - SEE DETAIL 14/A5.5, SIM
32. FULL HEIGHT CABINET - SEE DETAIL 7/A5.4
33. CAST-IN-PLACE FLOOR DECK
34. GUARDRAIL - SEE DETAIL
35. TV MOUNTING ARM PER SPECS.
36. HOSE BIB BOX PER PLUMBING DWG'S
37. COPPER ROOF DRAIN/OVERFLOW OUTLET SPOUT. SEE DETAIL 20/A5.1 SIM. SEE PLUMBING FOR TYPE OF DRAIN
38. FLOW-THROUGH PLANTER: BIO-RETENTION SOIL OVER 6" GRAVEL BED W/ PEFORATED PIPE - DISCHARGE THROUGH WEEP HOLES - SEE CIVIL DRAWINGS
39. CORNER GUARD PER SPEC - SEE DETAIL 5/A5.4
40. ELECTROMAGNETIC DOOR HOLD - SEE DETAIL 1/A5.6
41. 30"x48" CLEAR FLOOR SPACE
42. SWIM FINS RACK - HORIZ. PIPE BARS, MOUNT TO CONC. WALL SEE 2/A4.3 & 5/A5.7
43. WALL RACK FOR RESCUE BOARDS. SEE DETAIL 2/A5.7

Int. Elevation Keyed Notes

1. BUILT-IN CABINETS PER DETAILS 13/A5.5 & 14/A5.5. FOR FULL HT. CAB SEE DETAIL 7/A5.4
2. PANTRY STORAGE
3. ADJUSTABLE SHELVES, TYP.
4. SLIDE IN ELECTRIC RANGE
5. TYPE II HOOD/MICROWAVE (400 CFM) PER SPECIFICATIONS. ROUTE HOOD EXHAUST THRU WALL. SEE MECHANICAL PLANS AND HOOD MANUFACTURER'S RECOMMENDATIONS
6. 4" KICK SPACE
7. END PANEL TO MATCH CABINET FRONTS
8. FIRE EXTINGUISHER LOCATION: SURFACE MOUNTED. REFER TO SPECS. FOR F.E. ALSO SEE DETAIL 2/A5.4 FOR RECESS MOUNTED (PER PLAN)
9. GYPSUM WALL BOARD PER FINISH SCHEDULE
10. CAST IN PLACE CONCRETE - SAND BLAST TEXTURED FINISHED PER SPEC.
11. MASONRY WALL, SEALED, TYP.- PER FINISH SCHEDULE & SPECS.
12. WORK COUNTER - SEE DETAILS ON SHEET A5.5
13. WINDOW / DOOR PER SCHEDULES
14. BREAK METAL
15. REFRIGERATORS PER SPEC.
16. BUILT-IN DESK - SEE 5/A5.5 SIM.
17. ELECTRIC WASHER & DRYER. PROVIDE POWER. SEE SPECS & PLUMBING DWG'S. FOR HOOK-UP REQUIREMENTS.
18. MARKER BOARD, PER SPECIFICATIONS
19. MECHANICAL GRILLE, PER MECHANICAL DWG'S.
20. LIGHT FIXTURE, PER ELECT. DWG'S.
21. PLUMBING FIXTURE. SEE PLUMBING DWG'S. & SPEC'S.
22. MIRROR. SEE SPEC'S.
23. OVERHEAD DOOR TRACK, PER DOOR SCHEDULE
24. L.E.D. DISPLAY
25. PEGBOARD
26. COUNTERTOP PER FINISH SCHEDULE
27. FIXED FILLER PANEL TO MATCH CABINETS/LOCKERS WHERE APPLICABLE
28. HOSE BIB BOX PER PLUMBING DWG'S
29. CEILING MOUNTED ADJUSTABLE BINOCULAR RAIL PER SPEC
30. STEEL COLUMN PER STRUCTURAL - PAINTED
31. ALUMINUM HANDRAIL / GUARDRAIL PER DETAILS & SPECS.
32. STEEL STAIR W/ CONCRETE TREADS
33. LOCKERS PER SPEC.
34. SHOWER DOOR PER SPEC.
35. TOILET & SHOWER PARTITIONS PER SPEC.
36. CONCRETE SEAT PER DETAIL 17/A5.2
37. MOP SINK MIXING VALVES, SEE PLUMBING
38. FIELD TILE - PER FINISH SCHEDULE. SEE 16/A5.5 (FOR SHOWER ELEVATION)
39. 1/2" ALUM. "T" REVEAL REGLET BY "FRYREGLET": TDM-TDM-625-75, WHERE GYPSUM BOARD MEETS CONCRETE WALL/CEILING. - DO NOT PAINT - SEE SEE DETAIL 20/A5.2
40. VERTICAL COUNTER SUPPORTS - SEE 2/A4.1 FOR SPACING & 1/A5.5
41. RECEPTION DESK PER DETAIL 15/A5.5
42. FIELD TILE PER FINISH SCHEDULE
43. UNDER COUNTER DISHWASHER PER SPECIFICATIONS. VERIFY DISHWASHER CLEARANCES
44. WALL MOUNTED ROOF ACCESS LADDER. SEE DETAIL 13/A5.1
45. BUILT-IN PLATFORM
46. WALL MOUNTED UTILITY SINK PER PLUMBING DWG'S.
47. MEDICAL PAC PROVIDED BY OWNER HANGING SYSTEM PROVIDED AND INSTALLED BY CONTRACTOR
48. EXPOSED MECHANICAL DUCT PER MECH. DWGS. - PAINT MATTE BLACK
49. PROVIDE (12) GALV. J-HOOKS FOR HANGING BUOYS - REFER TO OWNER FOR LAYOUT
50. SWIM FINS RACK - HORIZ. PIPE BARS, MOUNT TO CONC. WALL SEE 2/A4.3 & 5/A5.7
51. 2" DIA. GALV. PIPE FOR HANGING WET SUITS
52. CENTRIFUGAL DRYER BY OWNER
53. FULL HT. LOCKABLE CABINET FOR RADIOS & CHARGERS W/ (4) ADJ. SHELVING AND LOUVERED DOORS - SEE DTL. 7/A5.4 SIM.
54A. ELECTRICAL OUTLET FOR RADIO CHARGERS (PER ELEC.)
54B. ELECTRICAL OUTLET W/ CABLE TV (PER ELEC)
55. GYP. BD. SOFFIT
56. ICE MAKER PER SPEC
57. SEAMLESS STAINLESS STEEL SINK PER SPEC. HOOK-UP PER PER PLUMBING PLANS. ALSO SEE DETAIL 18/A5.5
58. STAINLESS STEEL BACKSPLASH TO UNDERSIDE OF UPPER CABINETS
59. 12"(D) x 48"(L) VINYL COATED OPEN WIRE SHELVING W/ BRACKET SUPPORTS
60. WALL RACK FOR RESCUE BOARDS. SEE DETAIL 2/A5.7
61. 12" HIGH WOOD FRAMED PLATFORM - SEE DETAIL 8 & 12/A5.7
62. CONCRETE PANEL JOINT LOCATION
63. ACCESSIBLE LOCKER (1 TIER): PROVIDE RECESS HANDLE W/ LIFTING TRIGGER HARDWARE

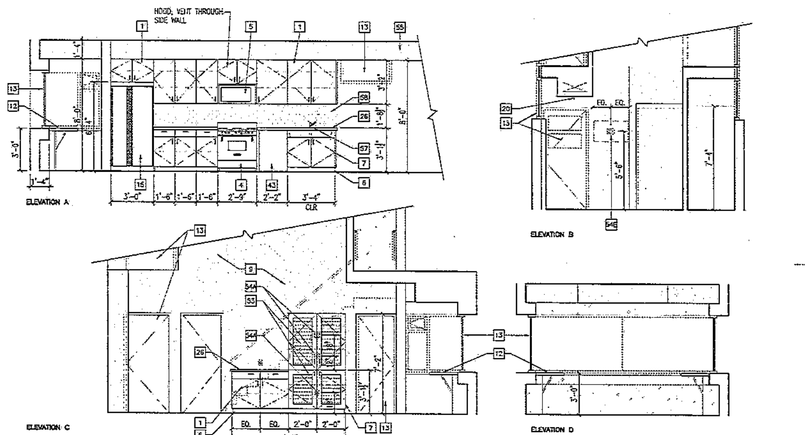

3 Ready Rm. 202

Notes

1. FOR RESTROOM #112: SEE DETAILS ON SHEET A5.0 FOR TYPICAL ACCESSIBILITY NOTES AND DETAIL 20/A5.0
2. SEE SHEET 14/A5.0 & 10/A5.0 FOR WALL AND DOOR SIGNAGE AT RESTROOMS.
3. SEE SHEET 8/A5.0 FOR GRAB BAR DETAIL
4. SEE SHEET A4.1 FOR RESTROOM ACCESSORY LEGEND

A-15

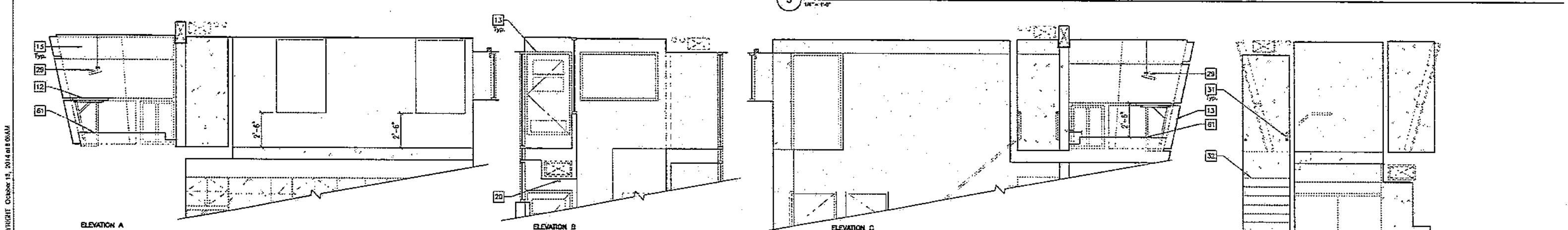

5 Observation Tower

Domusstudio + Associates Architects @ domusstudio
2150 West Washington, Suite 303
San Diego, California 92110
Tel 619.692.9393
Fax 619.692.9394
domusstudio.com

SPEC. NO. 8147

LICENSED ARCHITECT WAYNE HOLTAN No. C12113 REN 9.30.15 STATE OF CALIFORNIA

PLANS FOR THE CONSTRUCTION OF

South Mission Beach Lifeguard Station

Enlarged Plan + Interior Elevations

A4.1

CITY OF SAN DIEGO, CALIFORNIA
ENGINEERING & CAPITAL PROJECTS
ARCHITECTURAL ENGINEERING & CONTRACTS DIVISION
SHEET 33 OF 94 SHEETS

WBS S-00791

APPROVED: FOR CITY ENGINEER — DATE 10/13/2014

SUBMITTED BY: JIHAD SLEIMAN, PROJECT MANAGER

DESCRIPTION	BY	APPROVED	DATE	FILMED
ORIGINAL	WH/TT			

YOUSIF BENYAMIN, PROJECT ENGINEER

218-1893 CCS27 COORDINATES

1858-6253 CCS83 COORDINATES

CONTRACTOR ______ DATE STARTED ______
INSPECTOR ______ DATE COMPLETED ______

32849-33-D

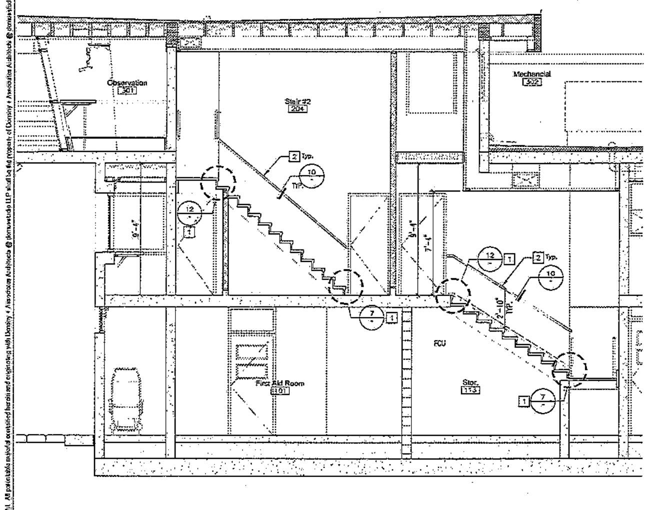

5 STAIR SECTION #2
1/4" = 1'-0"

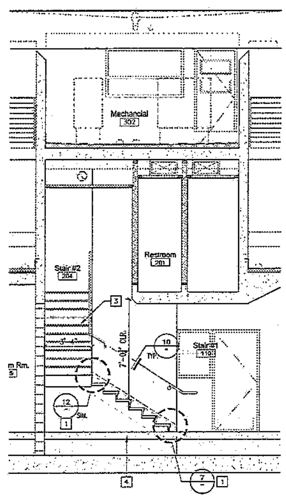

4 STAIR SECTION #1
1/4" = 1'-0"

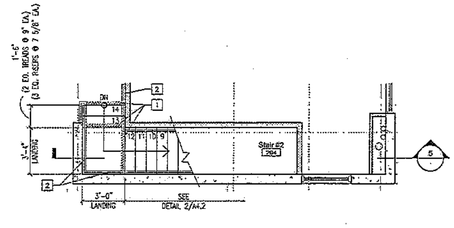

3 OBSERVATION LEVEL STAIR #2 PLAN
1/4" = 1'-0"

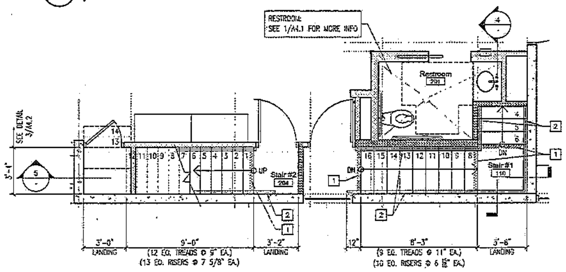

2 SECOND LEVEL FLOOR STAIR #1 AND #2 PLAN
1/4" = 1'-0"

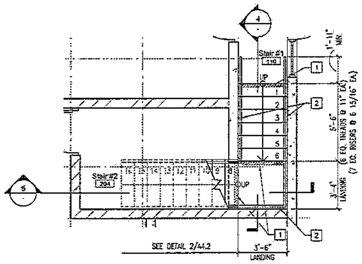

1 FIRST FLOOR STAIR #1
1/4" = 1'-0"

Stair Keyed Notes

1. 2" CONTRASTING STRIPE, TYP., SEE 7/A4.2, 11/A4.2
2. CONTINUOUS 34–38" HIGH HANDRAIL, TYP., SEE 11/A4.2, 10/A4.2
3. STAIR BEYOND
4. CONCRETE SLAB OVER SAND BASE OVER MAT FOUNDATION – SEE STRUCT.

Stair Notes

1. FOR GENENERAL STAIR REQUIREMENTS, SEE DETAIL 11/A4.2
2. HANDRAILS ARE TO BE PROVIDED ON EACH SIDE OF THE STAIRS, PER SECTION 1003.3.3.6A. EXCEPTION: PRIVATE STAIRWAYS 30" OR LESS IN HEIGHT MAY HAVE HANDRAILS ON ONE SIDE ONLY.
3. HANDRAILS ARE TO BE LOCATED ≥34" BUT ≤38" ABOVE NOSING OF TREADS, PER SECTION 1133B.4.2.1.
4. HANDRAILS SHALL EXTEND A MINIMUM ≥12" BEYOND TOP NOSING, AND MINIMUM ≥12"–PLUS–TREAD–WIDTH BEYOND THE BOTTOM NOSING, PER SECTION 1133B.4.2.2.
5. PER SECTION 1006.9.2.6A, THAT THE HANDGRIP PORTIONS OF HANDRAILS ARE:
   A) ≥1-1/4" AND ≤1-1/2" IN CROSS SECTIONAL DIMENSION.
   B) THE SHAPE MAY PROVIDE AN EQUIVALENT GRIPPING SURFACE.
   C) THE HANDGRIP PORTION SHALL HAVE A SMOOTH SURFACE, WITHOUT ANY HARP CORNERS.
6. STAIR TREADS SHALL BE NO LESS THAT 11" DEEP, MEASURED FROM RISER TO RISER. SECTION 1133B.4.5.3. THIS APPLIES EVEN IF BASIC UBC PROVISIONS MAY ALLOW A NARROWER TREAD.
7. THE INTERIOR STAIR TREADS ARE MARKED AT THE UPPER APPROACH AND THE LOWER TREAD OF EACH STAIR, BY A STRIP OF CLEARLY CONTRASTING COLOR, PER SECTION 1133B.4.4, AS FOLLOWS:
   A) AT LEAST 2" WIDE (BUT NOT MORE THAN 4" WIDE).
   B) PLACED PARALLEL TO AND NOT MORE THAN 1" FROM THE NOSE OF THE STEP OR LANDING.
   C) THE STRIP SHALL BE AS SLIP RESISTANT AS THE OTHER TREADS OF THE STAIR.
8. ALL TREAD SURFACES COMPLY WITH SECTION 1133B.4.5, AS FOLLOWS:
   A) STAIR TREADS SHALL BE NO LESS THAN 11" DEEP, MEASURED FROM RISER TO RISER.
   B) BE SLIP RESISTANT.
   C) HAVE SMOOTH, ROUNDED, OR CHAMFERED EXPOSED EDGES.
   D) HAVE NO ABRUPT EDGES AT THE NOSING. OPEN RISERS ARE NOT PERMITTED.
   E) NOSING SHALL NOT PROJECT ≥1-1/2" PAST THE FACE OF THE RISER ABOVE.
9. MIN. HEAD ROOM CLEARANCE OF 6'-8" FOR STAIRWAYS, MEASURED TANGENT TO TREAD NOSING.

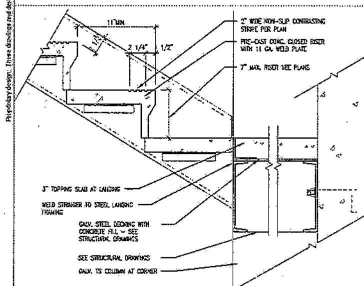

8 TREAD AND RISER DETAIL AT DECK
1 1/2" = 1'-0"

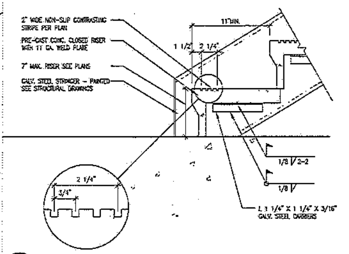

7 TREAD AND RISER DETAIL
1 1/2" = 1'-0"

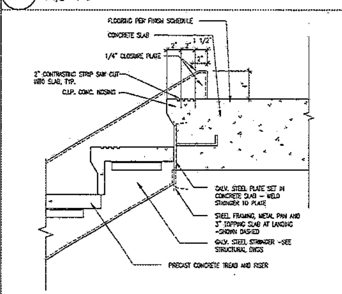

12 TREAD AND RISER DETAIL
1 1/2" = 1'-0"

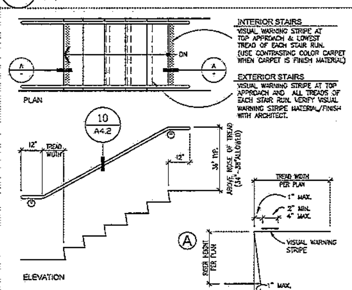

11 WALL MOUNTED STAIR HANDRAIL AND STRIPING - TYP.
3/8" = 1'-0"

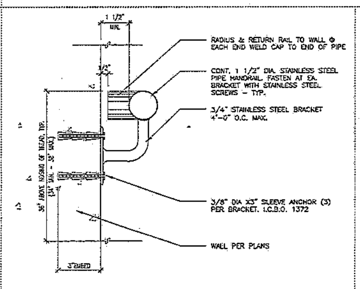

10 HANDRAIL @ WALL SIDE (EXTERIOR / INTERIOR)
3" = 1'-0"

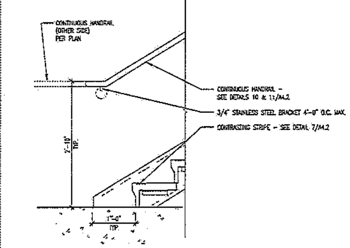

9 HANDRAIL AT LANDING
3/4" = 1'-0"

A-16

Dominy + Associates Architects @ domusstudio
2150 West Washington, Suite 303
San Diego, California 92110
Tel 619.692.9393
Fax 619.692.9394
domusstudio.com

SPEC. NO. 8147

LICENSED ARCHITECT · WAYNE HOLTAN · No. C12113 · REN 9.30.15 · STATE OF CALIFORNIA

PLANS FOR THE CONSTRUCTION OF
South Mission Beach Lifeguard Station

Stair Plans and Sections | A4.2

CITY OF SAN DIEGO, CALIFORNIA
ENGINEERING & CAPITAL PROJECTS
ARCHITECTURAL ENGINEERING & CONTRACTS DIVISION
SHEET 34 OF 94 SHEETS

WBS S-00791

APPROVED: FOR CITY ENGINEER — DATE 10/13/2014

SUBMITTED BY: JIHAD SLEIMAN, PROJECT MANAGER

DESCRIPTION	BY	APPROVED	DATE	FILMED
ORIGINAL	WH/TT			

YOUSIF BENYAMIN — PROJECT ENGINEER
218-1693 — CCS27 COORDINATES
1856-6253 — CCS83 COORDINATES

CONTRACTOR ______ DATE STARTED ______
INSPECTOR ______ DATE COMPLETED ______

32849-34-D

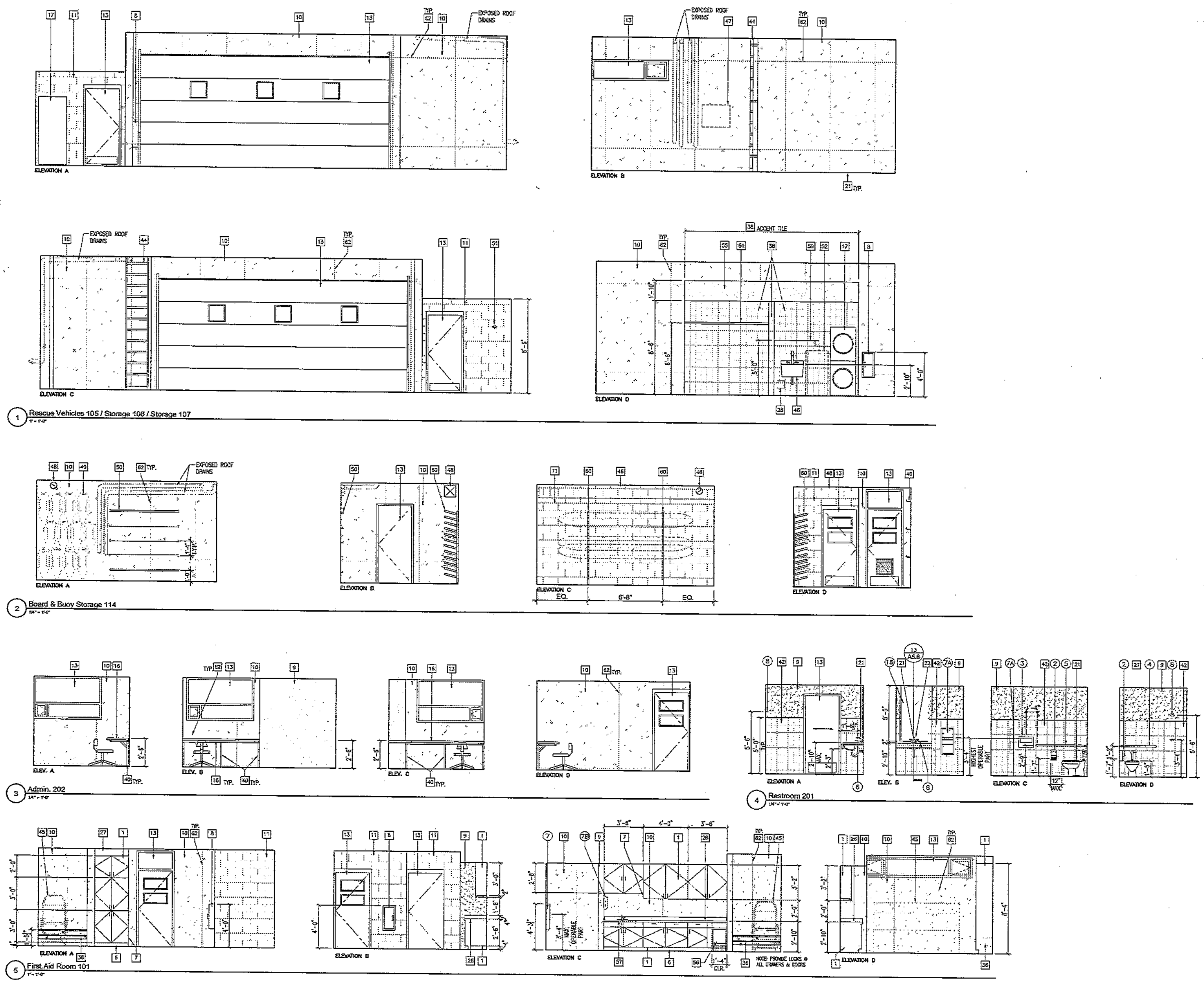

Int. Elevation Keyed Notes

1. BUILT-IN CABINETS PER DETAILS 13/A5.5 & 14/A5.5. FOR FULL HT. CAB SEE DETAIL 7/A5.4
2. PANTRY STORAGE
3. ADJUSTABLE SHELVES, TYP.
4. SLIDE IN ELECTRIC RANGE
5. TYPE II HOOD/MICROWAVE (400 CFM) PER SPECIFICATIONS. ROUTE HOOD EXHAUST THRU WALL. SEE MECHANICAL PLANS AND HOOD MANUFACTURER'S RECOMMENDATIONS
6. 4" KICK SPACE
7. END PANEL TO MATCH CABINET FRONTS
8. FIRE EXTINGUISHER LOCATION: SURFACE MOUNTED. REFER TO SPECS. FOR F.E., ALSO SEE DETAIL 2/A5.4 FOR RECESS MOUNTED (PER PLAN)
9. GYPSUM WALL BOARD PER FINISH SCHEDULE
10. CAST IN PLACE CONCRETE – SAND BLAST TEXTURED FINISHED PER SPEC.
11. MASONRY WALL, SEALED, TYP.– PER FINISH SCHEDULE & SPECS.
12. WORK COUNTER – SEE DETAILS ON SHEET A5.5
13. WINDOW / DOOR PER SCHEDULES
14. BREAK METAL
15. REFRIGERATORS PER SPEC.
16. BUILT-IN DESK – SEE 5/A5.5 SIM
17. ELECTRIC WASHER & DRYER, PROVIDE POWER. SEE SPECS & PLUMBING DWG'S. FOR HOOK-UP REQUIREMENTS.
18. MARKER BOARD, PER SPECIFICATIONS
19. MECHANICAL GRILLE, PER MECHANICAL DWG'S.
20. LIGHT FIXTURE, PER ELECT. DWG'S.
21. PLUMBING FIXTURE. SEE PLUMBING DWG'S. & SPEC'S.
22. MIRROR. SEE SPEC'S.
23. OVERHEAD DOOR TRACK, PER DOOR SCHEDULE
24. L.E.D. DISPLAY
25. PEGBOARD.
26. COUNTERTOP PER FINISH SCHEDULE
27. FIXED FILLER PANEL TO MATCH CABINETS/LOCKERS WHERE APPLICABLE
28. HOSE BIB BOX PER PLUMBING DWG'S
29. CEILING MOUNTED ADJUSTABLE BINOCULAR RAIL PER SPEC
30. STEEL COLUMN PER STRUCTURAL – PAINTED
31. ALUMINUM HANDRAIL / GUARDRAIL PER DETAILS & SPECS.
32. STEEL STAIR W/ CONCRETE TREADS
33. LOCKERS PER SPEC.
34. SHOWER DOOR PER SPEC.
35. TOILET & SHOWER PARTITIONS PER SPEC.
36. CONCRETE SEAT PER DETAIL 17/A5.2
37. MOP SINK MIXING VALVES, SEE PLUMBING
38. FIELD TILE – PER FINISH SCHEDULE. SEE 16/A5.5 (FOR SHOWER ELEVATION)
39. 1/2" ALUM. 'T' REVEAL REGLET BY 'FRYREGLET': TDM-TDM-625-75, WHERE GYPSUM BOARD MEETS CONCRETE WALL/CEILING. – DO NOT PAINT – SEE SEE DETAIL 20/A5.2
40. VERTICAL COUNTER SUPPORTS – SEE 2/A4.1 FOR SPACING & 1/A5.5
41. RECEPTION DESK PER DETAIL 15/A5.5
42. FIELD TILE PER FINISH SCHEDULE
43. UNDER COUNTER DISHWASHER PER SPECIFICATIONS. VERIFY DISHWASHER CLEARANCES
44. WALL MOUNTED ROOF ACCESS LADDER. SEE DETAIL 13/A5.1
45. BUILT-IN PLATFORM
46. WALL MOUNTED UTILITY SINK PER PLUMBING DWG'S.
47. MEDICAL PAC PROVIDED BY OWNER HANGING SYSTEM PROVIDED AND INSTALLED BY CONTRACTOR
48. EXPOSED MECHANICAL DUCT PER MECH. DWGS. – PAINT MATTE BLACK
49. PROVIDE (12) GALV. J-HOOKS FOR HANGING BUOYS – REFER TO OWNER FOR LAYOUT
50. SWIM FINS RACK – HORIZ. PIPE BARS, MOUNT TO CONC. WALL SEE 2/A4.3 & 5/A5.7
51. 2" DIA. GALV. PIPE FOR HANGING WET SUITS
52. CENTRIFUGAL DRYER BY OWNER
53. FULL HT. LOCKABLE CABINET FOR RADIOS & CHARGERS W/ (4) ADJ. SHELVING AND LOUVERED DOORS SEE DTL. 7/A5.4 SIM.

54A. ELECTRICAL OUTLET FOR RADIO CHARGERS (PER ELEC.)

54B. ELECTRICAL OUTLET W/ CABLE TV (PER ELEC)

55. GYP. BD. SOFFIT
56. ICE MAKER PER SPEC
57. SEAMLESS STAINLESS STEEL SINK PER SPEC. HOOK-UP PER PER PLUMBING PLANS. ALSO SE DETAIL 18/A5.5
58. STAINLESS STEEL BACKSPLASH TO UNDERSIDE OF UPPER CABINETS
59. 12"(D) x 48"(L) VINYL COATED OPEN WIRE SHELVING W/ BRACKET SUPPORTS
60. WALL RACK FOR RESCUE BOARDS, SEE DETAIL 2/A5.7
61. 12" HIGH WOOD FRAMED PLATFORM – SEE DETAIL 8 & 12/A5.7
62. CONCRETE PANEL JOINT LOCATION
63. ACCESSIBLE LOCKER (1 TIER): PROVIDE RECESS HANDLE W/ LIFTING TRIGGER HARDWARE

A-17

Domusy + Associates Architects @ domusstudio
2150 West Washington, Suite 303
San Diego, California 92110
Tel 619.692.9393
Fax 619.692.9394
domusstudio.com

SPEC. NO. 8147

LICENSED ARCHITECT · WAYNE HOLTAN · No. C12115 · REN 9.30.15 · STATE OF CALIFORNIA

PLANS FOR THE CONSTRUCTION OF

South Mission Beach Lifeguard Station

Interior Elevations

A4.3

CITY OF SAN DIEGO, CALIFORNIA
ENGINEERING & CAPITAL PROJECTS
ARCHITECTURAL ENGINEERING & CONTRACTS DIVISION
SHEET 35 OF 94 SHEETS

APPROVED: FOR CITY ENGINEER — DATE 10/13/2014

WBS S-00791

SUBMITTED BY: JIHAD SLEIMAN, PROJECT MANAGER

DESCRIPTION	BY	APPROVED	DATE	FILMED
ORIGINAL	WH/TT			

YOUSIF BENYAMIN — PROJECT ENGINEER

215-1693 — CCS27 COORDINATES

1858-6253 — CCS83 COORDINATES

CONTRACTOR ______ DATE STARTED ______
INSPECTOR ______ DATE COMPLETED ______

32849-35-D

FRONT APPROACH - FIGS. 11B-26A AND 11B-33

17 Level Maneuvering Clearance at Doors
3/8"= 1'-0"

NOTE:
-THE SIGN SHALL BE PER CITY STANDARD SDM-117

PARKING SIGNS:
1. POST MOUNTED SIGNS, SEE M-45 FOR BREAK-AWAY SIGN POST
2. SIGN SHALL BE CONSTRUCTED OF A MINIMUM 1/16" THICK ALUMINUM
3. COLORS: BORDER, TEXT, AND SYMBOL - WHITE (RETROREFLECTIVE) BACKROUND - BLUE (RETROREFLECTIVE)
4. FONT SANS-SERIF CLEARVIEW

13 AUTHORIZED VEHICLE PARKING SIGN
NTS

TYPE C:
- "UNISEX" MALE / FEMALE PICTORAL SHAPE: ROUND WITH TRIANGLE INTERIOR

TYPE E:
-"UNISEX" WITH BRAILLE AND HANDICAP SYMBOL
-"EXIT" SIGNS WITH BRAILLE
-"EXIT ROUTE" SIGNS WITH BRAILLE
-"EXIT STAIR DOWN" SIGNS WITH BRAILLE
-"COMMUNICATION ROOM" SIGNS WITH BRAILLE
-"SHOWER" WITH BRAILLE AND HANDICAP SYMBOL

SEE BELOW FOR SIGN CONSTRUCTION

TYPE F:
- "THIS DOOR TO REMAIN UNLOCKED WHEN BUILDING IS OCCUPIED"

SIGN CONSTRUCTION:
1. Substrate: ⅛" black matt acrylic
2. Face: laminate per specification section 09 06 00
3. Pictoral/lettering (graphic art): 1/32" applique. color per specification section 09 06 00
4. Lettering height: ⅝" tall typical u.o.n.
5. Lettering font: sans serif
6. Attach signs to door with 3m vbh heavy duty double-sided mounting tap.
7. Mount signs at 60" a.f.f. to center of sign.
8. Edges of signs shall be eased and corners rounded with ⅛" radius.
9. For additional info see "general accessibility notes," "signage" on sheet A/5.0.

LETTERING HEIGHT:
TYPE E: ⅝" TALL
TYPE F: 1" TALL
TYPE C: ½" TALL

WALL TACTILE SIGNS

NOTE:
CONTRACTOR TO PROVIDE SUBMITTALS FOR APPROVAL

10 Signage
1 1/2"= 1'-0"

① 70" SQ. ACCESSIBILITY SIGN SEE DETAIL 11 THIS SHEET.
② PEDESTRIAN ROUTE. 5% MAX. SLOPE CROSS SLOPE 1/4":1' MAX.
③ WHEEL STOP, SEE DETAIL 15/A5.0
④ ACCESS AISLE:
5'-0" MIN. AT TYP. ACCESSIBLE PARKING STALL
8'-0" MIN. AT VAN ACCESSIBLE PARKING STALL
NOTE: MUST BE LOCATED ON PASSENGER SIDE - WHEN ONLY ONE ACCESSIBLE SPACE IS PROVIDED IT MUST BE MADE VAN ACCESSIBLE - "NO PARKING" SHALL BE PAINTED ON THE GROUND IN LETTERS NO LESS THAN 12 INCHES HIGH PER Sec. 1129B.4.1 & 4.2
⑤ STRIPES AT 36" O.C.
⑥ 2% MAX. SURFACE SLOPE IN ANY DIRECTION.
⑦ TYP. PAVEMENT SYMBOL SEE. DTL. 2 THIS SHEET
⑧ WITHIN THE ACCESS AISLE PAINT THE WORDS "NO PARKING" IN 12" HIGH LETTERS MIN.
⑨ CURB
⑩ RAMP PER PLAN
⑪ DETECTABLE WARNING PER CITY OF SAN DIEGO STANDARD DRAWING G-30

1 ACCESSIBLE PARKING STALL
1/8"= 1'-0"
02580-01

WALKING PARALLEL - FIG. 11B-7A

OBJECTS ON POSTS / PYLONS - FIG 11B-7B

18 Protruding Objects
3/8"= 1'-0"

FOR SIGN CONSTRUCTION, SEE DETAIL 10 / A5.0

LOCATE TACTILE RESTROOM SIGN ON LATCH SIDE OF DOOR.

GRADE 2 BRAILLE PER GENERAL PHYSICAL ACCESSIBILITY SIGN NOTE 5.

14 BRAILLE SIGNAGE
N.T.S.
10400-02

5"x5" SITE ACCESSIBILITY SIGN WITH THE INTERNATIONAL SYMBOL OF ACCESSIBILITY.

1-1/4" DIAMETER GALV. PIPE SET IN 12" DIA. CONCRETE PIER 18" BELOW GRADE. SEE DTL 5, THIS SHEET.

BLUE BACKGROUND EQUAL TO COLOR No.15090 IN FEDERAL STANDARD 595B.

5"x5" BRUSH STEEL PLASTIC LAMINATE OR EQUIVALENT. (VERIFY MAT'L. WITH ARCHITECT)

BLACK PROFILE

DIRECTIONAL SYMBOL WHERE NEEDED.

FINISH GRADE

6 SITE ACCESSIBILITY SIGN
1 1/2"= 1'-0"
10400-08

TRUNCATED DOMES PER CITY OF SAN DIEGO STANDARD DRAWING G-30

PROFILE VIEW OF WHEELCHAIR WITH OCCUPANT, PAINTED WHITE. THE PROFILE VIEW SHALL BE LOCATED SO THAT IT IS VISIBLE TO A TRAFFIC ENFORCEMENT OFFICER WHEN A VEHICLE IS PROPERLY PARKED IN THE SPACE. (PER CBC Sec. 1129B.5)

2" WIDE BORDER. PAINTED WHITE

BACKGROUND. PAINTED BLUE. (TO MATCH COLOR No. 15090 IN FEDERAL STD. 595B)

2 ACCESSIBLE PARKING SYMBOL
3/4"= 1'-0"
02580-03

FOR ACCESSIBILITY NOTES - SEE SHEET A5.01

ADA COMPLIANT LOCKERS

19 ACCESSBILE LOCKERS
NTS

15 Precast Wheel Stop
1"= 1'-0"

NOTE:
-THE SIGN SHALL BE PER CITY STANDARD SDM-117

PARKING SIGNS:
1. POST MOUNTED SIGNS, SEE M-45 FOR BREAK-AWAY SIGN POST
2. SIGN SHALL BE CONSTRUCTED OF A MINIMUM 1/16" THICK ALUMINUM
3. COLORS: BORDER, TEXT, AND SYMBOL - WHITE (RETROREFLECTIVE) BACKROUND - BLUE (RETROREFLECTIVE)
4. FONT SANS-SERIF CLEARVIEW

11 ACCESSIBLE PARKING SIGN
NTS

COLORED BLACK OR BLUE SYMBOL

5"x5" BUILDING ENTRANCE ACCESSIBILITY SIGN. BACKGROUND TO BE BRUSH ALUMINUM PLASTIC LAMINATE. (VERIFY COLOR WITH ARCHITECT.)

PROVIDE SIGNS MOUNTED ON GLASS WITH BLANK TO MATCH, ON OPPOSITE SIDE OF GLASS, TO HIDE GLUE MARKS.

GRADE 2 BRAILLE PER GENERAL ACCESSIBILITY SIGN NOTE 5. TYP.

SEE FLOOR PLANS FOR LOCATIONS

7 BLD'G ENTRANCE ACCESSIBILITY SIGN
6"= 1'-0"
10400-03

***FLOOR TO BE SLIP RESISTANT W/ MAX. SLOPE = 1.5% IN ANY DIRECTION

CONTRACTOR TO VERIFY CLEARANCES w/ SPECIFIED FIXTURES

20 ACCESSIBLE TOILET ROOM / STALL
1/4"= 1'-0"
10800-01

NOTE:
ALL BOLLARDS SHALL BE PLUMB, VERTICALLY

5"O.D. STD. STEEL GALV. PIPE WITH STEEL GALV. CAP, U.N.O. (MIN. 1/4" WALL THICKNESS) PRIME AND PAINT - COLOR: YELLOW. (AT NON-REMOVABLE LOCATIONS, FILL BOLLARD WITH CONCRETE)

2" STEEL LOCKABLE LOOP. WELD UPRIGHT TO SLEEVE.

NEW OR EXISTING FINISH GRADE / HARDSCAPE PER SITE AND LANDSCAPE PLANS. SAWCUT AND REPAIR AS REQ'D TO MATCH ADJ SURFACE.

STEEL GALV. SLEEVE SET IN CONC. FOUNDATION

16 REMOVABLE BOLLARD
1/2"= 1'-0"

NOTE:
-THE SIGN SHALL BE PER CITY STANDARD SDM-117

-THIS SIGN SHALL BE POSTED IN A CONSPICUOUS PLACE AT EACH ENTRANCE TO OFF-STREET PARKING FACILITIES, OR IMMEDIATELY TO AND VISIBLE FROM EACH STALL OR SPACE. (SEE SITE PLAN FOR LOCATION).

BLANK SPACES ARE TO BE FILLED IN WITH APPROPRIATE INFORMATION AS A PERMANENT PART OF THE SIGN AT THE TIME OF FINAL INSPECTION

POST MOUNTED SIGNS, SEE M-45 FOR BREAK-AWAY SIGN POST

12 OFF STREET PARKING SIGN
NTS

8 RESTROOM GRAB BAR
3"= 1'-0"
10800-05

A-18

Domusy + Associates Architects @ domusstudio
2150 West Washington, Suite 303
San Diego, California 92110
Tel 619.692.9393
Fax 619.692.9394
domusstudio.com

SPEC. NO. 8147

LICENSED ARCHITECT WAYNE HOLTAN No. C12113 REN 9.30.15 STATE OF CALIFORNIA

PLANS FOR THE CONSTRUCTION OF
South Mission Beach Lifeguard Station

Accessible Details | A5.0

CITY OF SAN DIEGO, CALIFORNIA
ENGINEERING & CAPITAL PROJECTS
ARCHITECTURAL ENGINEERING & CONTRACTS DIVISION
SHEET 36 OF 94 SHEETS

WBS S-00791

APPROVED FOR CITY ENGINEER — DATE 10/13/2014

SUBMITTED BY: JIHAD SLEIMAN, PROJECT MANAGER
YOUSIF BENYAMIN, PROJECT ENGINEER

DESCRIPTION	BY	APPROVED	DATE	FILMED
ORIGINAL	WH/TT			

218-1693
CCS27 COORDINATES
1858-6253
CCS83 COORDINATES

CONTRACTOR ______ DATE STARTED ______
INSPECTOR ______ DATE COMPLETED ______

32849-36-D

© COPYRIGHT October 13, 2014 at 8:10AM
Proprietary design: These drawings and design are protected by common law copyright. All patentable material contained herein and originating with Domusy + Associates Architects @ domusstudio LLP shall be the property of Domusy + Associates Architects @ domusstudio LLP

Proprietary design: These drawings and design are protected by common law copyright. All patentable material contained herein and originating with Dominy + Associates Architects @ domusstudio LLP shall be the property of Dominy + Associates Architects @ domusstudio LLP
© COPYRIGHT October 13, 2014 at 8 10AM

South Mission Beach Lifeguard Station
San Diego, California

Entrances and Exterior Ground Floor Exit Doors

1. ALL ENTRANCES AND EXTERIOR GROUND FLOOR EXIT DOORS TO BUILDINGS AND FACILITIES SHALL BE MADE ACCESSIBLE TO PERSONS WITH DISABILITIES. SUCH ENTRANCES SHALL BE CONNECTED BY AN ACCESSIBLE ROUTE (COMPLYING WITH SEC. 1114B.1.2) TO PUBLIC TRANSPORTATION STOPS, TO ACCESSIBLE PARKING AND PASSENGER LOADING ZONES AND TO PUBLIC STREETS OR SIDEWALKS, IF AVAILABLE. (CBC SEC. 1133B.1.1.1.1)

2. ENTRANCES SHALL BE CONNECTED BY AN ACCESSIBLE ROUTE TO ALL ACCESSIBLE SPACES OR ELEMENTS WITHIN THE BUILDING OR FACILITY. DOORWAYS SHALL HAVE A MINIMUM CLEAR OPENING OF 32" WITH THE DOOR OPEN 90 DEGREES, MEASURED BETWEEN THE FACE OF THE DOOR AND THE OPPOSITE STOP. OPENINGS MORE THAN 24" IN DEPTH SHALL COMPLY WITH SEC. 1118B.1. (CBC SEC. 1133B.1.1.1.1)
   EXCEPTIONS:
   a. EXTERIOR GROUND-FLOOR EXITS SERVING SMOKE PROOF ENCLOSURES, STAIRWELLS AND EXIT DOORS SERVICING STAIRS ONLY NEED NOT BE MADE ACCESSIBLE.
   b. EXITS IN EXCESS OF THOSE REQUIRED BY CHAPTER 10, AND WHICH ARE MORE THAN 24" ABOVE GRADE ARE NOT REQUIRED TO BE ACCESSIBLE. SUCH DOORS SHALL HAVE SIGNS WARNING THAT THEY ARE NOT ACCESSIBLE. WARNING SIGNS SHALL COMPLY WITH SEC. 1117B.5.1, ITEM 2.

Floor and Levels

1. IN BUILDINGS AND FACILITIES, FLOORS OF A GIVEN STORY SHALL BE A COMMON LEVEL THROUGHOUT, OR SHALL BE CONNECTED BY PEDESTRIAN RAMPS, PASSENGER ELEVATORS OR PLATFORM (WHEELCHAIR) LIFTS. (CBC SEC. 1120B.1)

2. GROUND AND FLOOR SURFACES ALONG ACCESSIBLE ROUTES AND IN ACCESSIBLE ROOMS AND SPACES, INCLUDING FLOORS, WALKS, RAMPS, STAIRS AND CURB RAMPS, SHALL BE STABLE, FIRM, SLIP RESISTANT AND SHALL COMPLY WITH 1124B (CBC SEC. 1124B.1)

Walks and Sidewalks

1. WALKS AND SIDEWALKS SHALL HAVE A CONTINUOUS COMMON SURFACE, NOT BE INTERRUPTED BY STEPS OR BY ABRUPT CHANGES IN LEVEL EXCEEDING 1/2", AND SHALL BE A MINIMUM OF 48" IN WIDTH. (CBC SEC. 1133B.7.1)

2. IF A WALK OR SIDEWALK HAS A LESS THAN 60" CLEAR WIDTH, THEN PASSING SPACES AT LEAST 60"X60" SHALL BE LOCATED AT REASONABLE INTERVALS NOT TO EXCEED 200'-0". A T-INTERSECTION IS AN ACCEPTABLE PASSING PLACE. (CBC SEC. 1133B.7.1)

3. CHANGES IN LEVEL UP TO 1/4" MAY BE VERTICAL AND WITHOUT EDGE TREATMENT. CHANGES IN LEVEL BETWEEN 1/4" AND 1/2" SHALL BE BEVELED WITH A SLOPE NO GREATER THAN 1:2. CHANGES IN LEVEL GREATER THAN 1/2" SHALL BE ACCOMPLISHED BY MEANS OF CURB RAMP, RAMP, ELEVATOR OR PLATFORM LIFT THAT COMPLIES WITH SEC. 1127B.5, 1133B.5, 1116B.1, 1116B.2. (CBC SEC. 1133B.7.4, 1124B.2)

4. SURFACES WITH A SLOPE OF LESS THAN 6% GRADIENT SHALL BE AT LEAST AS SLIP RESISTANT AS THAT DESCRIBED AS A MEDIUM SALTED FINISH. SLOPES GREATER THAN A 6% GRADIENT SHALL BE SLIP RESISTANT. (CBC SEC. 1133B.7.1.1, 1133B.7.1.2)

5. SURFACE CROSS SLOPES SHALL NOT EXCEED 1:50 (2% SLOPE). (CBC SEC. 1133B.7.1.3)

6. WALKS, SIDEWALKS, AND PEDESTRIAN WAYS SHALL BE FREE OF GRATINGS WHENEVER POSSIBLE. FOR GRATINGS LOCATED IN THE SURFACE OF ANY OF THESE AREAS, GRID OPENINGS IN THE GRATINGS SHALL BE LIMITED TO 1/2" IN THE DIRECTION OF TRAFFIC FLOW. (CBC SEC. 1133B.7.2)

7. WHEN THE SLOPE IN THE DIRECTION OF TRAVEL OF ANY WALK EXCEEDS 1 VERTICAL TO 20 HORIZONTAL (5% GRADIENT), IT SHALL COMPLY WITH THE PROVISIONS OF SEC. 1133B.5. (CBC SEC. 1133B.7.2)

8. ALL WALKS WITH CONTINUOUS GRADIENTS SHALL HAVE LEVEL AREAS AT LEAST 5'-0" IN LENGTH AT INTERVALS OF AT LEAST EVERY 400'. (CBC SEC. 1133B.7.5)

Hazards

1. ABRUPT CHANGES IN LEVEL, EXCEPT BETWEEN A WALK OR SIDEWALK AND AN ADJACENT STREET OR DRIVEWAY, EXCEEDING 4" IN A VERTICAL DIMENSION, SUCH AS PLANTERS OR FOUNTAINS LOCATED IN OR ADJACENT TO WALKS, SIDEWALKS OR OTHER PEDESTRIAN WAYS, SHALL BE IDENTIFIED BY CURBS PROJECTING AT LEAST 6" IN HEIGHT ABOVE THE WALK OR SIDEWALK SURFACE. WHEN A GUARD OR HANDRAIL IS PROVIDED, NO CURB IS REQUIRED WHEN A GUIDE RAIL IS PROVIDED 3" (+1") ABOVE THE SURFACE OF THE WALK OR SIDEWALK, THE WALK IS 5% OR LESS GRADIENT OR NO ADJACENT HAZARD EXISTS. (CBC SEC. 1133B.8.1)

2. ANY OBSTRUCTION THAT OVERHANGS A PEDESTRIAN WAY (INCLUDING WALKS, HALLS, CORRIDORS, PASSAGEWAYS, AISLES, OR OTHER CIRCULATION SPACES) SHALL HAVE A MINIMUM 80" ABOVE THE WALKING SURFACE AS MEASURED FROM THE BOTTOM OF THE OBSTRUCTION. IF VERTICAL CLEARANCE OF AN AREA ADJOINING AN ACCESSIBLE ROUTE IS REDUCED TO LESS THAN 80" (NOMINAL DIMENSION), A BARRIER TO WARN THE BLIND OR VISUALLY IMPAIRED PERSONS SHALL BE PROVIDED. (CBC SEC. 1133B.8.2, 1133B.8.8.2))

3. OBJECTS PROTRUDING FROM WALLS, WITH THEIR LEADING EDGES BETWEEN 27" AND 80" ABOVE FINISHED FLOOR, SHALL PROTRUDE NO MORE THAN 4" INTO WALKS, CORRIDORS, PASSAGEWAYS OR AISLES. OBJECTS MOUNTED WITH THEIR LEADING EDGES AT OR BELOW 27" ABOVE THE FINISHED FLOOR MAY PROTRUDE AT ANY AMOUNT. FREE-STANDING OBJECTS MOUNTED ON POSTS OR PYLONS MAY OVERHANG 12" MAXIMUM FROM 27" TO 80" ABOVE THE GROUND OR FINISHED FLOOR. PROTRUDING OBJECTS SHALL NOT REDUCE THE CLEAR WIDTH OF AN ACCESSIBLE ROUTE OR MANEUVERING SPACE. (CBC SEC. 1133B.8.6.1)

4. WHENEVER SIGNS MOUNTED ON POSTS OR PYLONS PROTRUDE FROM THE POSTS OR PYLONS PROTRUDE AND THE BOTTOM EDGE OF THE SIGNS IS AT LESS THAN 80" ABOVE THE FINISHED FLOOR OR GROUND LEVEL, THE EDGES OF SUCH SIGNS SHALL BE ROUNDED OR EASED AND THE CORNERS SHALL HAVE A MINIMUM RADIUS OF 0.125". (CBC SEC. 1133B.8.6.3)

Signs

1. THE INTERNATIONAL SYMBOL OF ACCESSIBILITY SHALL CONSIST OF A WHITE FIGURE ON A BLUE BACKGROUND. THE BLUE SHALL BE EQUAL TO COLOR NO. 15090 IN FEDERAL STANDARD 595B. (EXCEPTION: THE APPROPRIATE ENFORCEMENT AGENCY MAY APPROVE OTHER COLORS TO COMPLEMENT DECOR OR UNIQUE DESIGN. THE SYMBOL CONTRAST SHALL BE LIGHT ON DARK OR DARK ON LIGHT). (CBC SEC. 1117B.5.8.1.1)

2. CHARACTERS ON SIGNS SHALL BE SELECTED FROM FONTS THAT HAVE A WIDTH-TO-HEIGHT RATIO OF BETWEEN 3:5 AND 1:1 MEASURED BY THE WIDTH OF THE UPPERCASE LETTER "O" AND A HEIGHT OF THE UPPERCASE LETTER "I", AND A STROKE WIDTH-TO-HEIGHT RATIO OF BETWEEN 1:5 AND 1:10 MEASURED BY THE WIDTH AND HEIGHT OF THE UPPERCASE LETTER "I". (CBC SEC. 1117B.5.3)

3. CHARACTERS ON SIGNS SHALL BE SIZED ACCORDING TO THE VIEWING DISTANCE FROM WHICH THEY ARE TO BE READ FOUND ON THE "VISUAL CHARACTER HEIGHT" TABLE, SEC. 1117B.5.4. THE MINIMUM HEIGHT IS MEASURED USING AN UPPERCASE LETTER "I". LOWERCASE CHARACTERS ARE PERMITTED. VIEWING DISTANCE SHALL BE MEASURED AS THE HORIZONTAL DISTANCE BETWEEN THE CHARACTER AND AN OBSTRUCTION PREVENTING FURTHER APPROACH TOWARDS THE SIGN. (CBC SEC. 1117B.5.4)

4. CHARACTERS, SYMBOLS AND THEIR BACKGROUND SHALL HAVE A NONGLARE FINISH. CHARACTERS AND SYMBOLS SHALL BE CONTRAST WITH THEIR BACKGROUND, EITHER LIGHT CHARACTERS ON A DARK BACKGROUND OR DARK CHARACTERS ON A LIGHT BACKGROUND. (CBC SEC. 1117B.5.2)

5. WHEN RAISED CHARACTERS OR PICTORIAL SYMBOLS (PICTOGRAMS) ARE USED, THEY SHALL CONFORM TO THE FOLLOWING: (CBC SEC. 1117B.5.5)
   a. CHARACTERS ON SIGNS SHALL BE RAISED 1/32" MIN. AND SHALL BE SANS SERIF UPPERCASE CHARACTERS ACCOMPANIED BY CONTRACTED GRADE 2
   b. BRAILLE COMPLYING WITH 1117B.5.6. (CBC SEC. 1117B.5.5.1)
   c. RAISED CHARACTERS SHALL BE A MIN. OF 5/8" AND A MAXIMUM OF 2" HIGH. (CBC SEC. 1117B.5.5.2)
   d. PICTORIAL SYMBOL SIGNS (PICTOGRAMS) SHALL BE ACCOMPANIED BY THE VERBAL DESCRIPTION PLACED DIRECTLY BELOW THE PICTOGRAM. THE OUTSIDE DIMENSION OF THE PICTOGRAM FIELD SHALL BE A MIN. OF 6" IN HEIGHT. (CBC SEC. 1117B.5.5.3)
   e. CHARACTERS AND BRAILLE SHALL BE IN A HORIZONTAL FORMAT. BRAILLE SHALL BE PLACED A MINIMUM OF 3/8" AND A MAXIMUM OF 1/2" DIRECTLY BELOW THE TACTILE CHARACTERS, FLUSH LEFT OF CENTERED. WHEN TACTILE TEXT IS MULTILINED, ALL BRAILLE SHALL BE PLACED TOGETHER BELOW ALL LINES OF TACTILE TEXT. (CBC 1117B.5.5.4)

6. CONTRACTED (GRADE 2) BRAILLE SHALL BE USED WHEREVER BRAILLE IS REQUIRED IN OTHER PORTIONS OF THESE STANDARDS. DOTS SHALL BE 1/10" ON CENTER IN EACH CELL WITH 2/10" SPACE BETWEEN CELLS MEASURED FROM THE SECOND COLUMN OF DOTS IN THE FIRST CELL TO THE FIRST COLUMN OF DOTS IN THE SECOND CELL. DOTS SHALL BE RAISED A MIN. OF 1/40" ABOVE THE BACKGROUND. BRAILLE DOTS SHALL BE DOMED OR ROUNDED. (CBC SEC. 1117B.5.6)

7. ENTRANCES TO BUILDINGS AND FACILITIES THAT ARE ACCESSIBLE TO AND USABLE BY PERSONS WITH DISABILITIES SHALL BE IDENTIFIED WITH A MINIMUM OF ONE SIGN DISPLAYING THE INTERNATIONAL SYMBOL OF ACCESSIBILITY AND WITH ADDITIONAL DIRECTIONAL SIGNS, UTILIZING THE SYMBOL, AT JUNCTIONS WHERE THE ACCESSIBLE ROUTE OF TRAVEL DIVERGES FROM THE REGULAR CIRCULATION PATH, TO BE VISIBLE TO PERSONS ALONG APPROACHING CIRCULATION PATHS. IN EXISTING BUILDINGS AND FACILITIES, ENTRANCES WHICH ARE NOT ACCESSIBLE SHALL HAVE DIRECTIONAL SIGNAGE COMPLYING WITH SEC. 1117B.5.1, ITEM 2 AND 3, WHICH INDICATES THE LOCATION OF AND ROUTE TO THE NEAREST ACCESSIBLE ENTRANCE. (CBC SEC. 1117B.5.8.1.2 AND 1127B.3)

8. WHERE PERMANENT IDENTIFICATION SIGNS ARE PROVIDED FOR ROOMS AND SPACES, SIGNS SHALL BE INSTALLED ON THE WALL ADJACENT TO THE LATCH SIDE OF THE DOOR. WHERE THERE IS NO WALL SPACE ON THE LATCH SIDE, INCLUDING AT DOUBLE LEAF DOORS, SIGNS SHALL BE PLACED ON THE NEAREST ADJACENT WALL, PREFERABLY ON THE RIGHT. (CBC SEC. 1117B.5.7)

9. WHERE PERMANENT IDENTIFICATION SIGNAGE IS PROVIDED FOR ROOMS AND SPACES, THEY SHALL BE LOCATED ON THE APPROACH SIDE OF THE DOOR AS ONE ENTERS THE ROOM OR SPACE. (CBC SEC. 1117B.5.7)

10. SIGNS THAT IDENTIFY EXITS SHALL BE LOCATED ON THE APPROACH SIDE OF THE DOOR AS ONE EXITS THE ROOM OR SPACE. (CBC SEC. 1117B.5.7)

11. MOUNTING HEIGHT FOR SIGNAGE SHALL BE 60" ABOVE THE FINISHED FLOOR TO THE CENTER LINE OF THE SIGN. MOUNTING LOCATION SHALL BE DETERMINED SO THAT A PERSON MAY APPROACH WITHIN 3" OF SIGNAGE WITHOUT ENCOUNTERING PROTRUDING OBJECTS OR STANDING WITHIN THE SWING OF A DOOR. (CBC SEC. 1117B.5.7)

Parking Spaces, Parking Structures, Loading Zones

1. EACH PARKING SPACE RESERVED FOR PERSONS WITH PHYSICAL DISABILITIES SHALL BE IDENTIFIED BY A REFLECTORIZED SIGN PERMANENTLY POSTED IMMEDIATELY ADJACENT TO AND VISIBLE FROM EACH STALL OR SPACE, CONSISTING OF THE INTERNATIONAL SYMBOL OF ACCESSIBILITY IN WHITE ON A DARK BLUE BACKGROUND. THE SIGN SHALL NOT BE SMALLER THAN 70 SQUARE INCHES IN AREA AND, WHEN IN A PATH OF TRAVEL, SHALL BE POSTED AT A MINIMUM HEIGHT OF 80" FROM THE BOTTOM OF THE SIGN TO THE PARKING SPACE FINISHED GRADE. SIGNS MAY ALSO BE CENTERED ON THE WALL AT THE INTERIOR END OF THE PARKING SPACE. AN ADDITIONAL SIGN OR ADDITIONAL LANGUAGE BELOW THE SYMBOL OF ACCESSIBILITY SHALL STATE "MINIMUM FINE $250". (CBC SEC. 1129B.4)

2. VAN ACCESSIBLE SPACES COMPLYING WITH SECTION 1129B.3, ITEM 2 SHALL HAVE AN ADDITIONAL SIGN OR LANGUAGE STATING "VAN ACCESSIBLE" BELOW THE SYMBOL OF ACCESSIBILITY. SIGNS SHALL BE LOCATED SO THEY CANNOT BE OBSCURED BY A VEHICLE PARKED IN THE SPACE. (CBC SEC. 1129B.4)

3. AN ADDITIONAL SIGN SHALL ALSO BE POSTED IN A CONSPICUOUS PLACE AT EACH ENTRANCE TO OFF-STREET PARKING FACILITIES, OR IMMEDIATELY ADJACENT TO AND VISIBLE FROM EACH STALL OR SPACE. THE SIGN SHALL NOT BE LESS THAN 17"X22" IN SIZE WITH 1" HIGH MINIMUM LETTERING, WHICH CLEARLY AND CONSPICUOUSLY STATES THE FOLLOWING (CBC SEC. 1129B.4):

   "UNAUTHORIZED VEHICLES PARKED IN DESIGNATED ACCESSIBLE SPACES NOT DISPLAYING DISTINGUISHING PLACARDS OR SPECIAL LICENSE PLATES ISSUED FOR PERSONS WITH DISABILITIES MAY BE TOWED AWAY AT OWNER'S EXPENSE. TOWED VEHICLES MAY BE RECLAIMED AT _________ OR BY TELEPHONING _________."

   (BLANK SPACES ARE TO BE FILLED IN WITH APPROPRIATE INFORMATION AS A PERMANENT PART OF THE SIGN.)

4. IN ADDITION TO THE ABOVE REQUIREMENTS, THE SURFACE OF EACH ACCESSIBLE PARKING SPACE OR STALL SHALL HAVE A SURFACE IDENTIFICATION DUPLICATING EITHER OF THE FOLLOWING SCHEMES:
   a. BY OUTLINING OR PAINTING THE STALL OR SPACE IN BLUE AND OUTLINING ON THE GROUND IN THE STALL OR SPACE IN WHITE OR SUITABLE CONTRASTING COLOR A PROFILE VIEW DEPICTING A WHEELCHAIR WITH OCCUPANT; OR
   b. BY OUTLINING A PROFILE VIEW OF A WHEELCHAIR WITH OCCUPANT IN WHITE ON BLUE BACKGROUND. THE PROFILE VIEW SHALL BE LOCATED SO THAT IT IS VISIBLE TO A TRAFFIC ENFORCEMENT OFFICER WHEN A VEHICLE IS PROPERLY PARKED IN THE SPACE AND SHALL BE 36"X36". (CBC SEC. 1129B.4)

5. SURFACE SLOPES OF ACCESSIBLE PARKING SPACES SHALL BE THE MINIMUM POSSIBLE AND SHALL NOT EXCEED ONE UNIT VERTICAL TO 50 UNITS HORIZONTAL (2% SLOPE) IN ANY DIRECTION. (CBC SEC. 1129B.3.4)

6. WHEN PROVIDED, PASSENGER DROP-OFF AND LOADING ZONES SHALL BE LOCATED ON ACCESSIBLE ROUTE OF TRAVEL (COMPLYING WITH 1114B1.2) AND SHALL COMPLY WITH 1131B.2. (CBC SEC. 1131B.1)

7. WHERE PROVIDED, ONE PASSENGER DROP-OFF AND LOADING ZONE SHALL PROVIDE AN ACCESS AISLE AT LEAST 5'-0" WIDE AND 20'-0" LONG ADJACENT AND PARALLEL TO THE VEHICLE PULL-UP SPACE. VEHICLE STANDING SPACES AND ACCESS AISLES SHALL BE LEVEL WITH SURFACE SLOPES NOT EXCEEDING 1:50 (2% SLOPE) IN ALL DIRECTIONS. IF THERE ARE CURBS BETWEEN THE ACCESS AISLE AND THE VEHICLE PULL-UP SPACE, A CURB RAMP SHALL BE PROVIDED. EACH PASSENGER DROP-OFF AND LOADING ZONE DESIGNED FOR PERSONS WITH DISABILITIES SHALL BE IDENTIFIED BY A REFLECTORIZED SIGN, COMPLYING WITH CBC SEC. 1117B.5.1, ITEMS 2 AND 3, PERMANENTLY POSTED IMMEDIATELY ADJACENT TO AND VISIBLE FROM THE PASSENGER DROP-OFF OR LOADING ZONE STATING "PASSENGER LOADING ZONE ONLY" AND INCLUDING THE INTERNATIONAL SYMBOL OF ACCESSIBILITY, IN WHITE ON A DARK BLUE BACKGROUND. (CBC SEC. 1131B.2.1)

8. PROVIDE MINIMUM VERTICAL CLEARANCE OF 114" (9'-6") AT ACCESSIBLE PASSENGER LOADING ZONES AND ALONG AT LEAST ONE VERTICAL ACCESS ROUTE TO SUCH AREAS FROM SITE ENTRANCES AND EXITS (CBC SEC. 1131B2.2)

9. ALL ENTRANCES TO AND VERTICAL CLEARANCES WITHIN PARKING STRUCTURES SHALL HAVE A MINIMUM VERTICAL CLEARANCE OF 98" (8'-2") WHERE REQUIRED FOR ACCESSIBILITY TO ACCESSIBLE PARKING SPACES. (CBC SEC. 1130B)

Drinking Fountains

1. WHERE DRINKING FOUNTAINS ARE PROVIDED THEY SHALL COMPLY WITH:
   a. WHERE ONLY ONE DRINKING FOUNTAIN IS PROVIDED ON A FLOOR, THERE SHALL BE A DRINKING FOUNTAIN THAT IS ACCESSIBLE TO INDIVIDUALS WHO USE WHEELCHAIRS AND ONE ACCESSIBLE TO THOSE WHO HAVE DIFFICULTY BENDING OR STOOPING. THIS CAN BE ACCOMPLISHED BY THE USE OF "HIGH-LOW" FOUNTAINS, OR BY SUCH OTHER MENS AS WOULD ACHIEVE THE REQUIRED ACCESSIBILITY FOR EACH GROUP ON EACH FLOOR. WHERE MORE THAN ONE DRINKING FOUNTAIN IS PROVIDED ON A FLOOR, 50% OF THOSE PROVIDE SHALL COMPLY WITH (CBC SEC. 1115B.4.6.1):
      a.1 WALL AND POST-MOUNTED CANTILEVERED DRINKING FOUNTAINS SHALL BE A MINIMUM OF 18" AND A MAXIMUM OF 19" IN DEPTH AND SHALL HAVE A CLEAR KNEE SPACE BETWEEN THE BOTTOM OF THE APRON AND THE FLOOR OR GROUND NOT LESS THAN 27" IN HEIGHT, 30" IN WIDTH, AND 8" IN DEPTH. THE DEPTH MEASUREMENTS BEING TAKEN FROM THE FRONT EDGE OF THE FOUNTAIN BACK TOWARD THE WALL OR MOUNTING POST. THE KNEE CLEARANCE SPACE MUST BE FREE OF EQUIPMENT OR OBSTRUCTIONS. ADDITIONALLY, THERE SHALL BE TOE CLEARANCE OF 9" IN HEIGHT ABOVE THE FLOOR AND 17" IN DEPTH FROM THE FRONT EDGE OF THE FOUNTAIN. THE TOE CLEARANCE SPACE MUST BE FREE OF EQUIPMENT OR OBSTRUCTIONS. A CLEAR FLOOR SPACE AT LEAST 30" BY 48" COMPLYING WITH SEC. 1118B.4 SHALL BE PROVIDED IN FRONT OF THE DRINKING FOUNTAIN TO ALLOW FORWARD APPROACH. A SIDE APPROACH DRINKING FOUNTAIN IS NOT ACCEPTABLE. (CBC SEC. 1115B.4.6.2)
   b. ALL DRINKING FOUNTAINS SHALL BE LOCATED COMPLETELY WITHIN ALCOVES OR OTHERWISE POSITIONED SO AS NOT TO ENCROACH INTO PEDESTRIAN WAYS. THE ALCOVE IN WHICH THE DRINKING FOUNTAINS LOCATED SHALL NOT BE LESS THAN 32" IN WIDTH AND 18" IN DEPTH. ADDITIONALLY, ALCOVES OR OTHERWISE POSITIONED SO AS TO LIMIT ENCROACHMENT INTO PEDESTRIAN WAYS ARE PERMITTED TO PROJECT 4" INTO WALKS, HALLS, CORRIDORS, PASSAGEWAYS OR AISLES. (CBC SEC. 1115B.4.6.3)

2. SEE DETAILS FOR ADDITIONAL INFORMATION

Doorways

1. EVERY REQUIRED EXIT DOORWAY SHALL BE OF A SIZE AS TO PERMIT THE INSTALLATION OF A DOOR NOT LESS THAN 3'-0" IN WIDTH, AND NOT LESS THAN 6'-8" IN HEIGHT. WHEN INSTALLED IN EXIT DOORWAYS, EXIT DOORS SHALL BE CAPABLE OF OPENING AT LEAST 90 DEGREES AND SHALL BE SO MOUNTED THAT THE CLEAR WIDTH OF THE EXITWAY IS NOT LESS THAN 32" MEASURED BETWEEN THE FACE OF THE DOOR AND THE OPPOSITE STOP. (CBC SEC. 1133B.2.2)

2. FOR HINGED DOORS, THE OPENING WIDTH SHALL BE MEASURED WITH THE DOOR POSITIONED AT AN ANGLE OF 90 DEGREES FROM ITS CLOSED POSITION. WHERE A PAIR OF DOORS IS UTILIZED, AT LEAST ONE OF THE DOORS SHALL PROVIDE A CLEAR, UNOBSTRUCTED OPENING WIDTH OF 32" WITH THE LEAF POSITIONED AT AN ANGLE OF 90 DEGREES FROM ITS CLOSED POSITION. (CBC SEC. 1133B.2.3, 1133B.2.3.1)

3. REGARDLESS OF THE OCCUPANT LOAD, THERE SHALL BE A FLOOR OR LANDING ON EACH SIDE OF A DOOR. (CBC SEC. 1133B.2.4)

4. THE FLOOR OR LANDING SHALL NOT BE MORE THAN 1/2" LOWER THAN THE THRESHOLD OF THE DOORWAY. CHANGE IN LEVEL BETWEEN 1/4" AND 1/2" SHALL BE BEVELED WITH A SLOPE NO GREATER THAN ONE UNIT VERTICAL TO TWO UNITS HORIZONTAL. CHANGES IN LEVEL GREATER THAN 1/2" SHALL BE ACCOMPLISHED BY MEANS OF A RAMP. SEE SEC. 1133B.5.1. (CBC SEC. 1133B.2.4.1)

5. THE FLOOR (INCLUDING LANDINGS) OR GROUND AREA WITHIN THE REQUIRED MANEUVERING CLEARANCES SHALL BE LEVEL AND CLEAR. (CBC SEC. 1133B.2.4.2)

6. THE LEVEL AREA (FLOOR OR LANDING) SHALL HAVE A LENGTH IN THE DIRECTION OF DOOR SWING OF AT LEAST 60" AND THE LENGTH OPPOSITE THE DIRECTION OF DOOR SWING OF 48" AS MEASURED AT RIGHT ANGLES TO THE PLANE OF THE DOOR IN ITS CLOSED POSITION, OR 44" WHERE THE DOOR HAS NO CLOSER AND APPROACH TO THE DOOR BY A PERSON IN A WHEELCHAIR CAN BE MADE FROM THE LATCH SIDE, OR IF THE DOOR HAS NEITHER LATCH NOR CLOSER AND APPROACH CAN BE MADE FROM THE HINGE SIDE. (CBC SEC. 1133B.2.4.2)

7. THE WIDTH OF THE LEVEL AREA ON THE SIDE TO WHICH THE DOOR SWINGS SHALL EXTEND 24" PAST THE STRIKE EDGE OF THE DOOR FOR EXTERIOR DOORS AND 18" PAST THE STRIKE EDGE FOR INTERIOR DOORS. (CBC SEC. 1133B.2.4.3)

8. THE SPACE BETWEEN TWO CONSECUTIVE DOOR OPENINGS IN A VESTIBULE, SERVING OTHER THAN A REQUIRED EXIT STAIRWAY, SHALL PROVIDE A MINIMUM OF 48" OF CLEAR SPACE FROM ANY DOOR OPENING INTO SUCH VESTIBULE WHEN THE DOOR IS POSITIONED AT AN ANGLE OF 90 DEGREES FROM ITS CLOSED POSITION. DOORS IN A SERIES SHALL SWING EITHER IN THE SAME DIRECTION OR AWAY FROM THE SPACE BETWEEN THE DOORS. (CBC SEC. 1133B.2.4.4)

9. WHERE A DOOR REQUIRED TO BE ACCESSIBLE BY SECTION 1133B.1.1.1 IS LOCATED IN A RECESS OR ALCOVE WHERE THE DISTANCE FROM THE FACE OF THE DOOR IS GREATER THAN 8", STRIKE SIDE CLEARANCES AS PRESCRIBED IN SEC. 1133B.2.4.3 SHALL BE PROVIDED. (CBC SEC. 1133B.2.4.5)

10. MAXIMUM EFFORT TO OPERATE DOORS SHALL NOT EXCEED 5 POUNDS FOR EXTERIOR DOORS AND INTERIOR DOORS, SUCH PULL OR PUSH EFFORT BEING APPLIED AT RIGHT ANGLES TO HINGED DOORS AND AT THE CENTER PLANE OF SLIDING OR FOLDING DOORS. COMPENSATING DEVICES OR AUTOMATIC DOOR OPERATORS MAY BE UTILIZED TO MEET THE ABOVE STANDARDS. WHEN FIRE DOORS ARE REQUIRED, THE MAXIMUM EFFORT TO OPERATE THE DOOR MAY BE INCREASED TO THE MINIMUM ALLOWABLE BY THE APPROPRIATE ADMINISTRATIVE AUTHORITY, NOT TO EXCEED 15 POUNDS. (CBC SEC. 1133B.2.5)

11. IF THE DOOR HAS A CLOSER, THEN THE SWEEP PERIOD OF THE CLOSER SHALL BE ADJUSTED SO THAT FROM AN OPEN POSITION OF 70 DEGREES, THE DOOR WILL TAKE AT LEAST 3 SECONDS TO MOVE TO A POINT 3" FROM THE LATCH, MEASURED TO THE LEADING EDGE OF THE DOOR. (CBC SEC. 1133B.2.5.1)

12. HAND-ACTIVATED DOOR OPENING HARDWARE, HANDLES, PULLS, LATCHES, LOCKS, AND OTHER OPERATING DEVICES ON ACCESSIBLE DOORS SHALL HAVE A SHAPE THAT IS EASY TO GRASP WITH ONE HAND AND DOES NOT REQUIRE TWISTING OF THE WRIST TO OPERATE. HARDWARE SHALL BE CENTERED BETWEEN 30" AND 44" ABOVE THE FLOOR. LATCHING AND LOCKING DOORS THAT ARE HAND-ACTIVATED AND WHICH ARE IN A PATH OF TRAVEL SHALL BE OPERABLE WITH A SINGLE EFFORT BY LEVER-TYPE HARDWARE, PANIC BARS, PUSH-PULL ACTIVATING BARS OR OTHER HARDWARE DESIGNED TO PROVIDE PASSAGE. LOCKED EXIT DOORS SHALL OPERATE AS ABOVE IN EGRESS DIRECTION. (CBC SEC. 1133B.2.5.2)

13. THE BOTTOM 10" OF ALL DOORS EXCEPT AUTOMATIC OR SLIDING SHALL HAVE A SMOOTH, UNINTERRUPTED SURFACE TO ALLOW THE DOOR TO BE OPENED BY A WHEELCHAIR FOOTREST WITHOUT CREATING A TRAP OR HAZARDOUS CONDITION. (CBC SEC. 1133B.2.6)

Restrooms

1. WATER CLOSETS REQUIRED TO BE ACCESSIBLE SHALL COMPLY WITH:
   a. THE CENTERLINE OF THE WATER CLOSET FIXTURE SHALL BE 18" FROM THE SIDE WALL PARTITION. ON THE OTHER SIDE OF THE WATER CLOSET, PROVIDE A MINIMUM OF 28" WIDE CLEAR FLOOR SPACE IF THE WATER CLOSET IS ADJACENT TO A FIXTURE OR A MINIMUM OF 32" WIDE CLEAR FLOOR SPACE IF THE WATER CLOSET IS ADJACENT TO A WALL OR PARTITION. THIS CLEAR FLOOR SPACE SHALL EXTEND FROM THE REAR WALL TO THE FRONT OF THE WATER CLOSET. (CBC SEC. 1115B.4.1.1)
   b. A MINIMUM OF 60" WIDE AND 48" DEEP CLEAR FLOOR SPACE SHALL BE PROVIDED IN FRONT OF THE WATER CLOSET. (CBC SEC. 1115B.4.1.2)
   c. GRAB BARS:
      c.1. GRAB BARS FOR WATER CLOSETS SHALL COMPLY WITH SEC. 1115B.7 AND SHALL BE PROVIDED ON THE SIDE WALL CLOSEST TO THE WATER CLOSET AND ON THE REAR WALL. GRAB BARS FOR WATER CLOSETS LOCATED WITHIN AMBULATORY ACESSIBLE COMPARTMENTS SHALL COMPLY WITH SEC. 1115B.7 AND SHALL BE PROVIDED ON BOTH SIDES OF THE COMPARTMENT. (CBC SEC. 1115B.4.1.3)
      c.2. GRAB BARS SHALL NOT PROJECT MORE THAN 3" INTO THE REQUIRED FLOOR SPACE. (CBC SEC. 1115B.4.1.3)
      c.3. SIDE WALL - THE SIDE GRAB BAR SHALL BE 42" LONG, MINIMUM, LOCATED 12" MAXIMUM FROM THE REAR WALL AND EXTENDED 54" MINIMUM FROM THE REAR WALL WITH THE FRONT END POSITIONED 24" MINIMUM IN FRONT OF THE WATER CLOSET. THE SIDE GRAB BAR SHALL BE SECURELY ATTACHED AND CENTERED 33" ABOVE AND PARALLEL TO THE FLOOR. (CBC SEC. 1115B.4.1.3.1)
      c.4. REAR WALL - THE REAR GRAB BAR SHALL BE 36" LONG MINIMUM AND EXTEND FROM THE CENTERLINE OF THE WATER CLOSET 12" MINIMUM ON ONE SIDE AND 24" MINIMUM ON THE OTHER SIDE. THE REAR GRAB BAR SHALL BE SECURELY ATTACHED AND CENTERED 33" ABOVE AND PARALLEL TO THE FLOOR, EXCEPT THAT WHERE A TANK-TYPE TOILET IS USED WHICH OBSTRUCTS PLACEMENT AT 33", THE GRAB BAR MAY BE AS HIGH AS 36" AND THE SPACE BETWEEN THE GRAB BAR AND THE TOP OF THE TANK SHALL BE 1-1/2" MINIMUM. (CBC SEC. 1115B.4.1.3.2)
      c.5. THE STRUCTURAL STRENGTH OF GRAB BARS, FASTENERS, AND MOUNTING DEVICES SHALL MEET THE FOLLOWING SPECIFICATIONS OF CBC SEC. 1115B.7.2:
         c.5.1. BENDING STRESS IN A GRAB BAR OR SEAT INDUCED BY THE MAXIMUM BENDING MOMENT FROM THE APPLICATION OF A 250-LB POINT LOAD SHALL BE LESS THAN THE ALLOWABLE STRESS FOR THE MATERIAL OF THE GRAB BAR OR SEAT. (CBC SEC. 1115B.7.2.1)
         c.5.2. SHEAR STRESS INDUCED IN A GRAB BAR OR SEAT BY THE APPLICATION OF A 250-LB POINT LOAD SHALL BE LESS THAN THE ALLOWABLE SHEAR STRESS FOR THE MATERIAL OF THE GRAB BAR OR SEAT, AND ITS MOUNTING BRACKET OR OTHER SUPPORT IS CONSIDERED TO BE FULLY RESTRAINED, THEN DIRECT AND TORSIONAL SHEAR STRESSES SHALL NOT EXCEED THE ALLOWABLE SHEAR STRESS. (CBC SEC. 1115B.7.2.2)
         c.5.3. SHEAR FORCE INDUCED IN FASTENER OR MOUNTING DEVICES FROM THE APPLICATION OF A 250-LB POINT LOAD SHALL BE LESS THAN THE ALLOWABLE LATERAL LOAD OF EITHER THE FASTENER OR MOUNTING DEVICE OR THE SUPPORTING STRUCTURE, WHICHEVER HAS THE SMALLER ALLOWABLE LOAD. (CBC SEC. 1115B.7.2.3)
         c.5.4. TENSILE FORCE INDUCED IN A FASTENER BY A DIRECT TENSION FORCE OF A 250-LB POINT LOAD, PLUS THE MAXIMUM MOMENT FROM THE APPLICATION OF A 250-LB POINT LOAD, SHALL BE LESS THAN THE ALLOWABLE WITHDRAWAL LOAD BETWEEN THE FASTENER AND SUPPORTING STRUCTURE. (CBC SEC. 1115B.7.2.4)
         c.5.5. GRAB BARS SHALL NOT ROTATE WITHIN THEIR FITTINGS. (CBC SEC. 1115B.7.2.5)
      c.6. THE DIAMETER OR WIDTH OF THE GRIPPING SURFACES OF A GRAB BAR SHALL BE 1 1/4" TO 1 1/2" OR THE SHAPE SHALL PROVIDE AN EQUIVALENT GRIPPING SURFACE. IF GRAB BARS ARE MOUNTED ADJACENT TO WALL, THE SPACE BETWEEN THE WALL AND THE GRAB BARS SHALL BE 1 1/2". (CBC SEC. 1115B.7.1)
      c.7. A GRAB BAR AND ANY WALL OR OTHER SURFACE ADJACENT TO IT SHALL BE FREE OF ANY SHARP OR ABRASIVE ELEMENTS. EDGES SHALL HAVE A MINIMUM RADIUS OF 1/8". (CBC SEC. 1115B.7.3)
   d. THE HEIGHT OF ACCESSIBLE WATER CLOSETS SHALL BE A MINIMUM OF 17" AND A MAXIMUM OF 19" MEASURED TO THE TOP OF A MAXIMUM 2" HIGH TOILET SEAT. (CBC SEC. 1115B.4.1.4)
   e. CONTROLS SHALL BE OPERABLE WITH ONE HAND AND SHALL NOT REQUIRE TIGHT GRASPING, PINCHING OR TWISTING. CONTROLS FOR THE FLUSH VALVES SHALL BE MOUNTED ON THE WIDE SIDE OF TOILET AREAS, NO MORE THAN 44" ABOVE THE FLOOR. THE FORCE REQUIRED TO ACTIVATE CONTROLS SHALL BE NO GREATER THAN 5 POUNDS-FORCE. (CBC SEC. 1115B.4.1.5)
   f. AUTOMATIC SPRING TO LIFTED POSITION SEATS ARE NOT ALLOWED. (CBC SEC. 1115B.4.1.7)

2. URINALS REQUIRED TO BE ACCESSIBLE SHALL COMPLY WITH:
   a. SHALL BE FLOOR MOUNTED, STALL-TYPE, OR WALL HUNG. (CBC SEC. 1115B.4.2.1)
   b. WHERE ONE OR MORE URINALS ARE PROVIDED, AT LEAST ONE WITH AN ELONGATED RIM PROJECTING A MINIMUM OF 14" FROM THE WALL AND A MAXIMUM OF 17" FROM THE WALL AND A MAXIMUM 17" ABOVE THE FLOOR SHALL BE PROVIDED. (CBC SEC. 1115B.4.2.1)
   c. FLUSH CONTROLS SHALL BE OPERABLE WITH ONE HAND AND AND SHALL NOT REQUIRE TIGHT GRASPING,
   d. INCHING OR TWISTING OF THE WRIST AND SHALL BE MOUNTED NO MORE THAN 44" ABOVE THE FLOOR. THE FORCE REQUIRED TO ACTIVATE CONTROLS SHALL BE NO GREATER THAN 5 LBS. ELECTRONIC AUTOMATIC FLUSHING CONTROLS ARE ACCEPTABLE AND PREFERABLE. (CBC SEC. 1115B.4.2.2)
   e. WHERE URINALS ARE PROVIDED, AT LEAST ONE SHALL HAVE A CLEAR FLOOR SPACE 30" BY 48" IN FRONT OF THE URINAL TO ALLOW FORWARD APPROACH. THIS CLEAR SPACE SHALL COMPLY WITH SEC. 1118B.4. (CBC SEC. 1115B.4.2.3)

3. LAVATORIES REQUIRED TO BE ACCESSIBLE SHALL COMPLY WITH:
   a. FAUCET CONTROLS AND OPERATING MECHANISMS SHALL BE OPERABLE WITH ONE HAND AND SHALL NOT REQUIRE TIGHT GRASPING, PINCHING, OR TWISTING OF THE WRIST. THE FORCE REQUIRED TO ACTIVATE CONTROLS SHALL BE NO GREATER THAN 5 LBS. LEVER-OPERATED, PUSH-TYPE AND ELECTRONICALLY CONTROLLED MECHANISMS (PREFERABLE) ARE EXAMPLES OF ACCEPTABLE DESIGNS. SELF-CLOSING VALVES ARE ALLOWED IF THE FAUCET REMAINS OPEN FOR AT LEAST 10 SECONDS. (CBC SEC. 1115B.4.3.1)
   b. LAVATORIES, WHEN LOCATED ADJACENT TO A SIDE WALL OR PARTITION, SHALL BE A MINIMUM OF 18" TO THE CENTER LINE OF THE FIXTURE. (CBC SEC. 1115B.4.3.2)
   c. ALL LAVATORIES THAT ARE DESIGNATED TO BE ACCESSIBLE SHALL BE A MINIMUM OF 17" IN HORIZONTAL DEPTH AND MOUNTED WITH THE RIM OR COUNTER EDGE NO HIGHER THAN 34" ABOVE THE FINISHED FLOOR AND WITH VERTICAL CLEARANCE MEASURED FROM THE BOTTOM OF THE APRON OR THE OUTSIDE BOTTOM EDGE OF THE LAVATORY OF 29" REDUCING TO 27" AT A POINT LOCATED 8" BACK FROM THE FRONT EDGE. IN ADDITION, A MINIMUM 9" HIGH TOE CLEARANCE MUST BE PROVIDED EXTENDING BACK TOWARD THE WALL TO A DISTANCE NO MORE THAN 6" FROM THE BACK WALL. THE TOE-CLEARANCE SPACE MUST BE FREE OF EQUIPMENT OR OBSTRUCTIONS. (CBC SEC. 1115B.4.3.2)
   d. A CLEAR FLOOR SPACE OF 30" BY 48" COMPLYING WITH SECTION 1118B.4 SHALL BE PROVIDED IN FRONT OF A LAVATORY TO ALLOW FORWARD APPROACH. SUCH CLEAR FLOOR SPACE SHALL ADJOIN OR OVERLAP AN ACCESSIBLE ROUTE AND SHALL EXTEND A MAXIMUM OF 19" INTO KNEE AND TOE SPACE UNDERNEATH THE LAVATORY. (CBC SEC. 1115B.4.3.3)
   e. HOT WATER AND DRAINPIPES ACCESSIBLE UNDER LAVATORIES SHALL BE INSULATED OR OTHERWISE COVERED. THERE SHALL BE NO SHARP OR ABRASIVE SURFACES UNDER LAVATORIES. (CBC SEC. 1115B.4.3.4)

4. ACCESSIBLE WATER CLOSET APARTMENTS SHALL COMPLY WITH:
   a. THE COMPARTMENT SHALL BE A MINIMUM OF 60" WIDE. (CBC SEC. 1115B.3.4.1)
   b. IF THE COMPARTMENT HAS A SIDE-OPENING DOOR, A MINIMUM 60" WIDE AND 60" DEEP CLEAR FLOOR SPACE SHALL BE PROVIDED IN FRONT OF THE WATER CLOSET. (CBC SEC. 1115B.3.4.2)
   c. IF THE COMPARTMENTS HAS AN END-OPENING DOOR (FACING THE WATER CLOSET), A MINIMUM 60" WIDE AND 48" DEEP CLEAR FLOOR SPACE SHALL BE PROVIDED IN FRONT OF THE WATER CLOSET. THE DOOR SHALL BE LOCATED IN FRONT OF THE CLEAR FLOOR SPACE AND DIAGONAL TO THE WATER CLOSET, WITH A MAXIMUM STILE WIDTH OF 4". (CBC SEC. 1115B.3.4.3)
   d. THE WATER CLOSET COMPARTMENT SHALL BE EQUIPPED WITH A DOOR THAT HAS AN AUTOMATIC-CLOSING DEVICE, AND SHALL HAVE A CLEAR, UNOBSTRUCTED OPENING WIDTH OF 32" WHEN LOCATED AT THE END AND 34" WHEN LOCATED AT THE SIDE WITH THE DOOR POSITIONED AT AN ANGLE OF 90 DEGREES FROM ITS CLOSED POSITION. (CBC SEC. 1115B.3.4.4)
   e. THE INSIDE AND THE OUTSIDE OF THE COMPARTMENT DOOR SHALL BE EQUIPPED WITH A LOOP OR U-SHAPED HANDLE IMMEDIATELY BELOW THE LATCH. THE LATCH SHALL BE FLIP-OVER STYLE, SLIDING OR OTHER HARDWARE NOT REQUIRING THE USER TO GRASP OR TWIST. (CBC SEC. 1115B.3.4.5)

5. WHEELCHAIR CLEARANCE IN MULTIPLE ACCOMMODATION TOILET FACILITIES - A CLEAR SPACE MEASURED FROM THE FLOOR TO A HEIGHT OF 27" ABOVE THE FLOOR, WITHIN THE SANITARY FACILITY ROOM, OF SUFFICIENT SIZE TO INSCRIBE A CIRCLE OF NOT LESS THAN 60" IN SIZE. OTHER THAN THE DOOR TO THE ACCESSIBLE WATER CLOSET COMPARTMENT, A DOOR IN ANY POSITION, MAY NOT ENCROACH INTO THIS SPACE BY NOT MORE THAN 12". (CBC SEC. 1115B.3.1.1)

6. DOORS SHALL NOT SWING INTO THE CLEAR FLOOR SPACE FOR ANY FIXTURE. (CBC SEC. 1115B.3.1.2, 1115B.3.2.2)

7. MIRRORS SHALL BE MOUNTED WITH THE BOTTOM EDGE OF THE REFLECTING SURFACE NO HIGHER THAN 40" FROM THE FLOOR. (CBC SEC. 1115B.8.1)

8. WHERE TOWEL, SANITARY NAPKINS, WASTE RECEPTACLES, DISPENSERS, OTHER EQUIPMENT AND CONTROLS ARE PROVIDED, AT LEAST ONE OF EACH TYPE SHALL BE LOCATED ON AN ACCESSIBLE ROUTE, WITH ALL OPERABLE PARTS, INCLUDING COIN SLOTS, WITHIN 40 INCHES OF THE FINISHED FLOOR AND SHALL COMPLY WITH SEC. 1117B.6. (CBC SEC. 1115B.8.3)

9. TOILET TISSUE DISPENSERS SHALL BE LOCATED ON THE WALL WITHIN 12" OF THE FRONT EDGE OF THE TOILET SEAT, MOUNTED BELOW THE GRAB BAR, AT A MINIMUM HEIGHT OF 19", AND 36" MAXIMUM TO THE FAR EDGE OF THE REAR WALL. DISPENSERS THAT CONTROL DELIVERY OR DO NOT PERMIT CONTINUOS PAPER FLOW SHALL BE NOT BE USED. (CBC SEC. 1115B.8.4)

Ramps

1. ANY ACCESSIBLE ROUTE OF TRAVEL SHALL BE CONSIDERED A RAMP IF ITS SLOPE IS GREATER THAN 1:20 (CBC SEC. 1133B.5.1)

2. PEDESTRIAN RAMPS SHALL HAVE A MINIMUM CLEAR WIDTH OF 48", UNLESS REQUIRED TO BE WIDER BY SOME OTHER PROVISIONS OF THIS CODE. PEDESTRIAN RAMPS SERVING ENTRANCES TO BUILDINGS. WHERE THE RAMP IS THE ONLY EXIT DISCHARGE PATH AND SERVES AN OCCUPANT LOAD OF 300 OR MORE SHALL HAVE A MINIMUM CLEAR WIDTH OF 60". RAMPS SERVING GROUP R OCCUPANCIES MAY BE 36" CLEAR WIDTH WHEN THE OCCUPANT LOAD IS 50 OR LESS. (CBC SEC. 1133B.5.2)

3. THE MAXIMUM SLOPE OF A RAMP THAT SERVES ANY EXIT WAY, PROVIDES ACCESS FOR PERSONS WITH PHYSICAL DISABILITIES, OR IS IN THE ACCESSIBLE ROUTE OF TRAVEL SHALL BE 1:12 (8.33% GRADIENT). THE MAXIMUM RISE FOR ANY RUN SHALL BE 30". (CBC SEC. 1133B.5.3)

4. THE CROSS-SLOPE OF RAMP SURFACES SHALL BE NO GREATER THAN 2% (1:50). (CBC SEC. 1133B.5.3.1)

5. LEVEL RAMP LANDINGS SHALL BE PROVIDED AT THE TOP AND BOTTOM OF EACH RAMP. TOP LANDINGS SHALL BE NOT LESS THAN 60" WIDE AND SHALL HAVE A LENGTH OF NOT LESS THAN 60" IN THE DIRECTION OF THE RAMP. LANDINGS AT THE BOTTOM OF RAMPS SHALL HAVE A DIMENSION IN THE DIRECTION OF RAMP RUN NOT LESS THAN 72". (CBC SEC. 1133B.5.4.2) INTERMEDIATE AND BOTTOM LANDINGS AT A CHANGE OF DIRECTION IN EXCESS OF 30 DEGREES SHALL HAVE A DIMENSION IN THE DIRECTION OF RAMP RUN OF NOT LESS THAN 72" TO ACCOMMODATE THE HANDRAIL EXTENSION. (CBC SEC. 1133B.5.4.6) OTHER INTERMEDIATE LANDINGS SHALL HAVE A DIMENSION OF NOT LESS THAN 60". (CBC SEC. 1133B.5.4.7)

6. DOORS IN ANY POSITION SHALL NOT REDUCE THE MINIMUM DIMENSION OF THE LANDING TO LESS THAN 42" AND SHALL NOT REDUCE THE REQUIRED WIDTH BY MORE THAN 3" WHEN FULLY OPEN. (CBC SEC. 1133B.5.4.3)

7. REQUIRED RAMPS SHALL HAVE A CURB AT LEAST 2" HIGH, OR A WHEEL GUIDE RAIL 2 TO 4" HIGH ON EACH SIDE OF THE RAMP LANDING THAT HAS A VERTICAL DROP EXCEEDING 4" AND THAT IS NOT BOUNDED BY A WALL OR FENCE. (CBC SEC. 1133B.5.4.9) WHEEL GUIDE SHOULD BE PROVIDED SHALL BE CENTERED 3" PLUS OR MINUS 1" ABOVE THE SURFACE OF THE RAMP. (CBC SEC. 1133B.5.6.2)

8. HANDRAILS ARE REQUIRED ON RAMPS, AND SHALL BE PLACED ON EACH SIDE OF THE RAMP, SHALL BE CONTINUOUS THE FULL LENGTH OF THE RAMP, SHALL BE 34 TO 38" ABOVE THE RAMP SURFACE TO THE TOP OF THE HANDRAILS, AND SHALL EXTEND A MINIMUM OF 1 FOOT BEYOND THE TOP AND BOTTOM OF THE RAMP AND SHALL BE PARALLEL WITH THE FLOOR OR GROUND SURFACE. THE INSIDE HANDRAIL ON SWITCHBACK OR DOGLEG RAMPS SHALL BE CONTINUOUS. THE ENDS OF HANDRAILS SHALL BE EITHER ROUNDED OR RETURNED TO THE FLOOR, WALL, OR POST. HANDRAILS PROJECTING FROM A WALL SHALL HAVE A SPACE OF 1-1/2" BETWEEN THE WALL AND THE HANDRAIL. HANDRAILS MAY BE LOCATED IN A RECESS IS A MAXIMUM OF 3" DEEP AND EXTENDSAT LEAST 18" ABOVE THE TOP OF THE RAIL. THE GRIP PORTION SHALL NOT BE LESS THAN 1-1/4" NOR MORE THAN 1-1/2" IN CROSS SECTIONAL NOMINAL DIMENSIO OR THE SHAPE SHALL PROVIDE AN EQUIVALENT GRIPPING SURFACE. ALL HANDRAIL SURFACES SHALL BE SMOOTH WITH NO SHARP CORNERS. HANDRAILS SHALL NOT ROTATE WITHIN THEIR FITTINGS. ANY WALL OR OTHER SURFACE ADJACENT TO THE HANDRAIL SHALL BE FREE OF SHARP OR ABRASIVE ELEMENTS. EDGES SHALL HAVE A MINIMUM RADIUS OF 1/8". (CBC SEC. 1133B.5.5.1)

Stairs

1. FOR STAIR NOTES AND REQUIREMENTS, SEE SHEET "STAIR - PLANS AND SEC.S"

Elevator

1. FOR ELEVATOR NOTES AND REQUIREMENTS, SEE SHEET "ELEVATOR - PLANS, SEC.S AND DETAILS"

A-19

Dominy + Associates Architects @ domusstudio
2150 West Washington, Suite 303
San Diego, California 92110
Tel 619.692.9393
Fax 619.692.9394
domusstudio.com

SPEC. NO. 8147

LICENSED ARCHITECT WAYNE HOLTAN No. C12113 REN. 9.30.15 STATE OF CALIFORNIA

PLANS FOR THE CONSTRUCTION OF
South Mission Beach Lifeguard Station

Accessibility Notes | A5.01

CITY OF SAN DIEGO, CALIFORNIA
ENGINEERING & CAPITAL PROJECTS
ARCHITECTURAL ENGINEERING & CONTRACTS DIVISION
SHEET 37 OF 94 SHEETS
APPROVED: [signature] 10/13/2014
FOR CITY ENGINEER | DATE

WBS S-00791
SUBMITTED BY: JIHAD SLEIMAN, PROJECT MANAGER

DESCRIPTION	BY	APPROVED	DATE	FILMED
ORIGINAL	WH/TT			

YOUSIF BENYAMIN, PROJECT ENGINEER
218-1693 CCS27 COORDINATES
1858-6253 CCS83 COORDINATES

CONTRACTOR ________ DATE STARTED ________
INSPECTOR ________ DATE COMPLETED ________

32849-37-D

ADDENDUM "A"

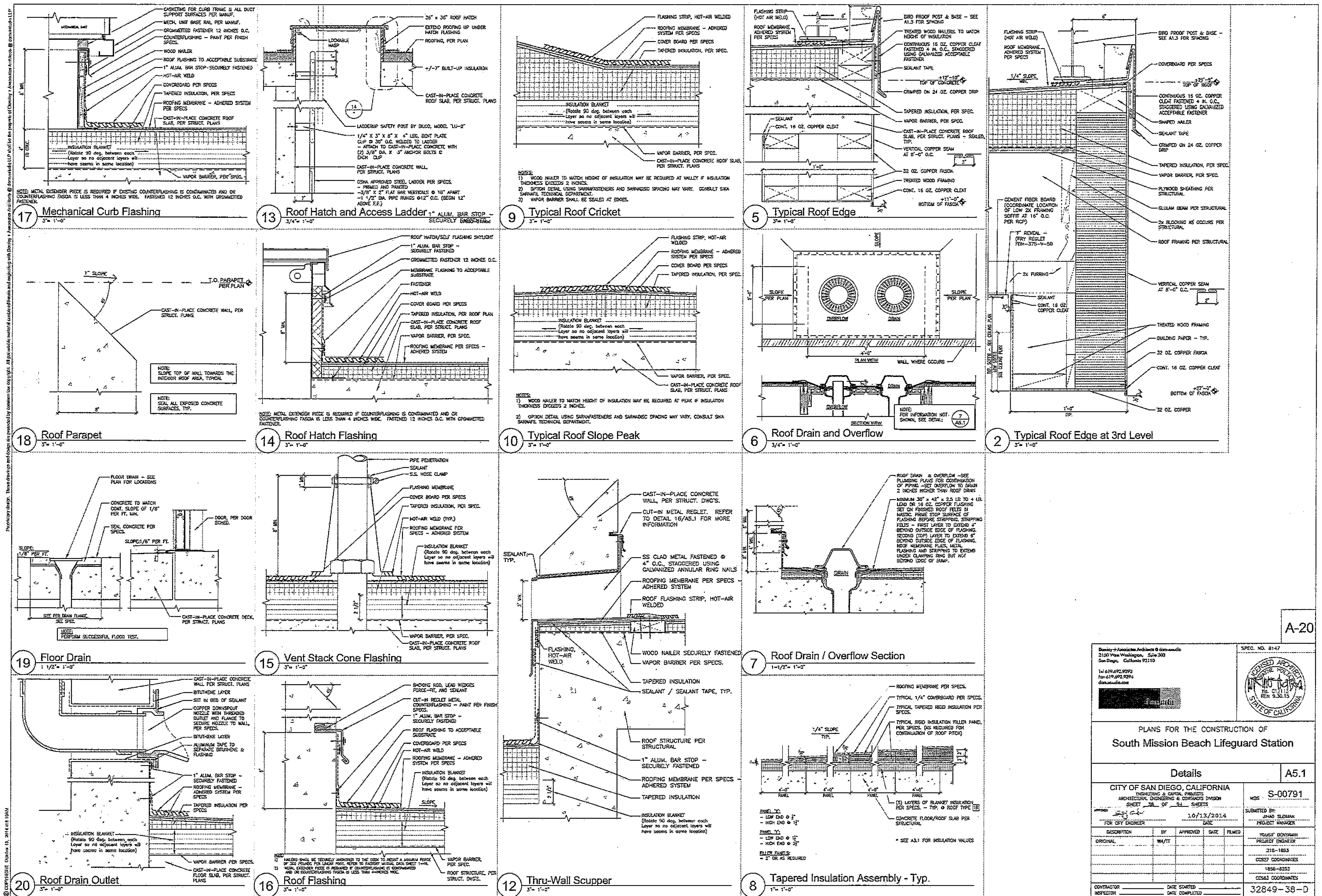

17 Mechanical Curb Flashing
3" = 1'-0"
13 Roof Hatch and Access Ladder
3/4" = 1'-0"
9 Typical Roof Cricket
3" = 1'-0"
5 Typical Roof Edge
3" = 1'-0"
18 Roof Parapet
3" = 1'-0"
14 Roof Hatch Flashing
3" = 1'-0"
10 Typical Roof Slope Peak
3" = 1'-0"
6 Roof Drain and Overflow
3/4" = 1'-0"
2 Typical Roof Edge at 3rd Level
3" = 1'-0"
19 Floor Drain
1 1/2" = 1'-0"
15 Vent Stack Cone Flashing
3" = 1'-0"
7 Roof Drain / Overflow Section
1-1/2" = 1'-0"
20 Roof Drain Outlet
3" = 1'-0"
16 Roof Flashing
3" = 1'-0"
12 Thru-Wall Scupper
3" = 1'-0"
8 Tapered Insulation Assembly - Typ.
1" = 1'-0"
A-20
PLANS FOR THE CONSTRUCTION OF
South Mission Beach Lifeguard Station
Details
A5.1
CITY OF SAN DIEGO, CALIFORNIA
S-00791
10/13/2014
32849-38-D

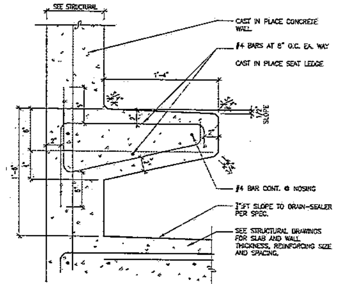

17 Concrete Seat at Footwash
1 1/2" = 1'-0"

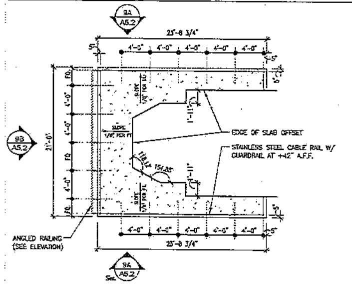

13 Exterior Guardrail at 3rd Floor Deck (Plan)
1/8" = 1'-0"

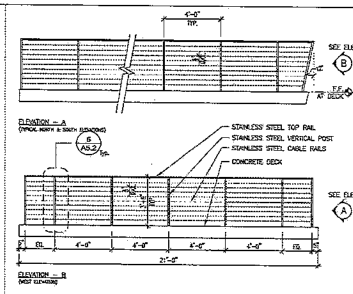

9 Guardrail Elevations @ 3rd Floor Deck
1/4" = 1'-0"

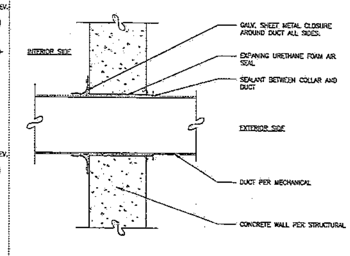

5 Duct Penetration at Exterior Wall
1 1/2" = 1'-0"

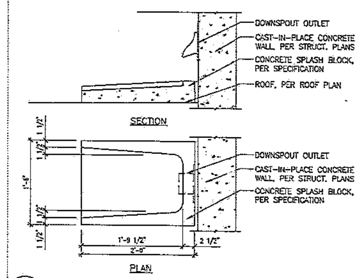

1 Concrete Splash Block
1" = 1'-0"

18

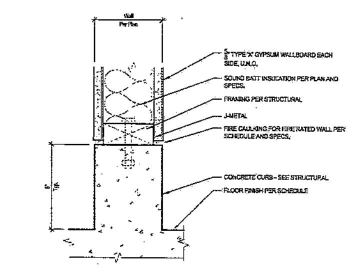

14 Concrete Curb at Framed Walls
3" = 1'-0"

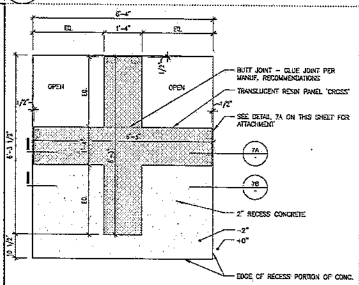

10 First Aid Cross
1/2" = 1'-0"

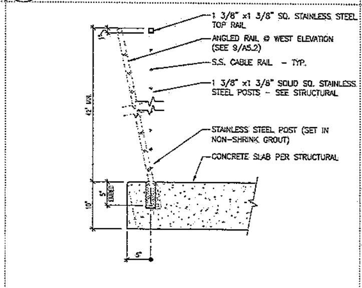

6 Ext. Guardrail at 3rd Floor Deck
1" = 1'-0"

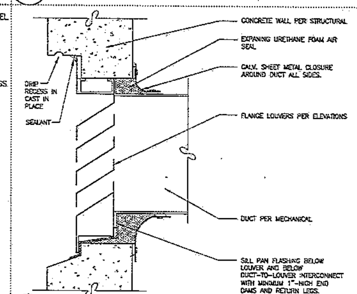

2 Metal Louver at Concrete Wall
1 1/2" = 1'-0"

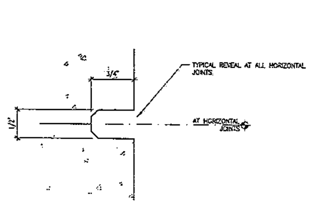

19 Reveal at Horizontal Joints
1" = 1"

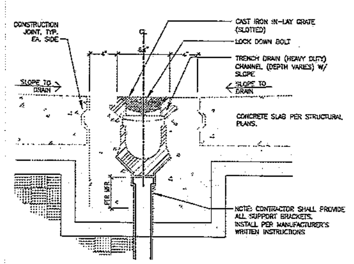

15 Precast Trench Drain at Garage
1 1/2" = 1'-0"

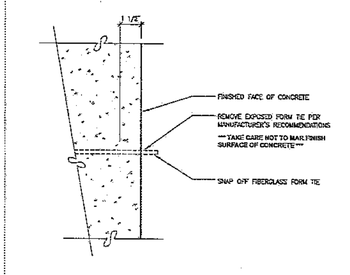

11 Form Tie Hole Treatment
3" = 1'-0"

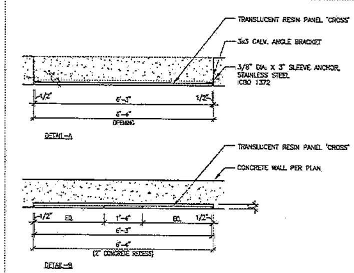

7 First Aid Cross (Sections)
1/2" = 1'-0"

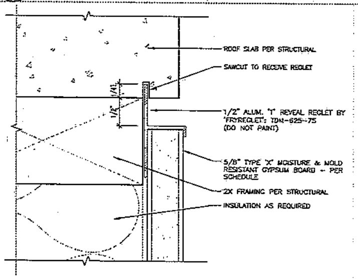

20 Reveal at Gyp. Board and Concrete
1" = 1"

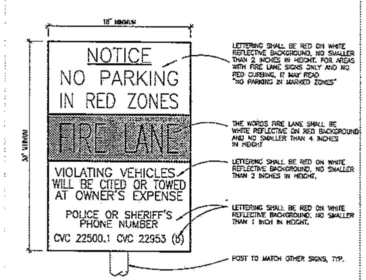

16 Fire Lane Entrance Sign
1 1/2" = 1'-0"
10400-10

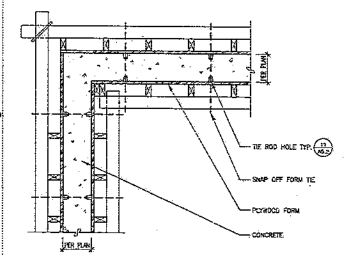

12 Concrete Form Corner Layout
3/4" = 1'-0"

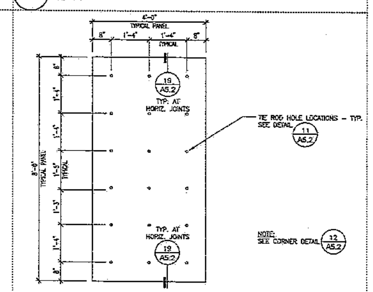

8 Tie Rod Spacing at Exposed Concrete Wall
1/2" = 1'-0"

A-21

SPEC. NO 8147

PLANS FOR THE CONSTRUCTION OF
South Mission Beach Lifeguard Station

Details A5.2

CITY OF SAN DIEGO, CALIFORNIA
ENGINEERING & CAPITAL PROJECTS
ARCHITECTURAL ENGINEERING & CONTRACTS DIVISION
SHEET 39 OF 94 SHEETS

WBS S-00791

10/13/2014

32849-39-D

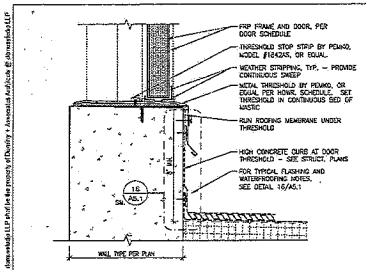

17 Ext. FRP Door Sill at Mech. Entrance
3" = 1'-0"

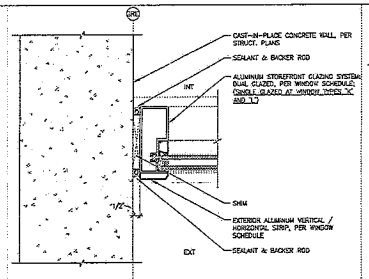

13 Storefront Jamb
3" = 1'-0"

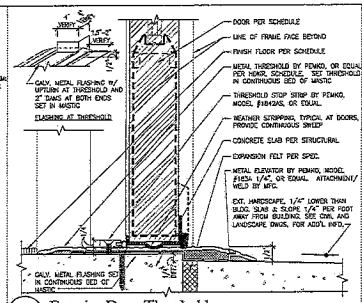

9 Exterior Door Threshold
6" = 1'-0"

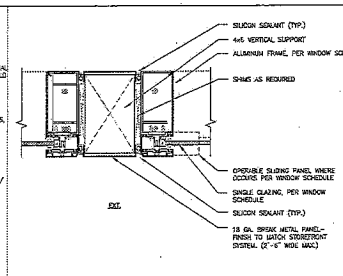

5 Break Metal at Vertical Support
3" = 1'-0"

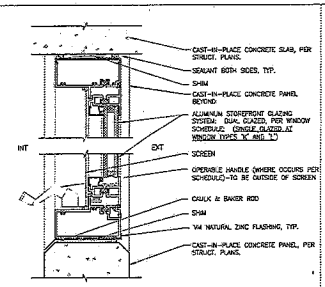

1 Storefront at Cast-In-Place Wall (Sill / Head)
3" = 1'-0"

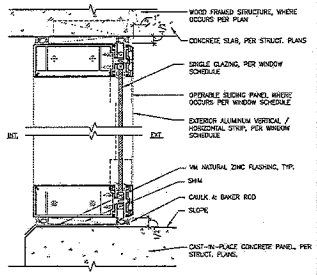

18 Storefront Head-Sill (Single Glaze)
3" = 1'-0"
(JAMB SIMILAR)

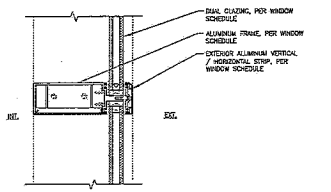

14 Storefront at Horizontal Mullion
3" = 1'-0"

10

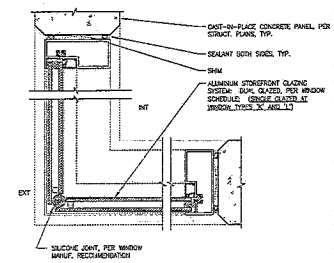

6 Storefront at Mitered Glazing
3" = 1'-0"

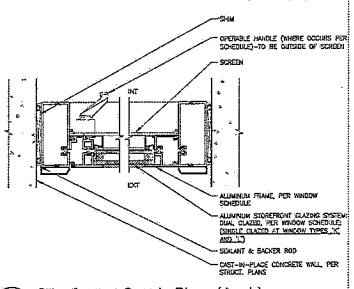

2 Storefront at Cast-In-Place (Jamb)
3" = 1'-0"

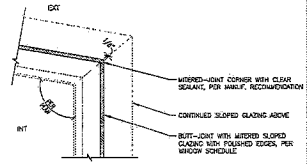

19 Storefront at Mitered Corner (Single Glaze)
3" = 1'-0"

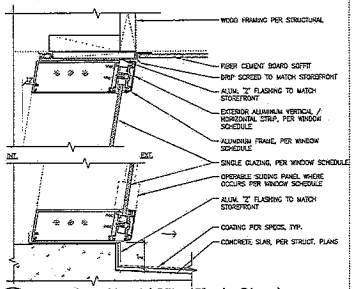

15 Storefront Head / Sill - (Single Glaze)
3" = 1'-0"

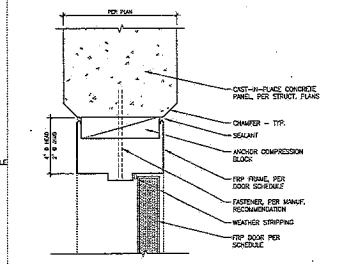

11 Exterior FRP Door Head At Cast-In-Place
3" = 1'-0"
(Jamb Similar)

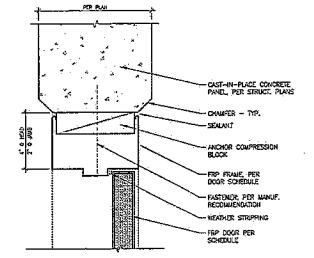

7 Interior FRP Door Head at Cast-In-Place
3" = 1'-0"
(Jamb Similar)

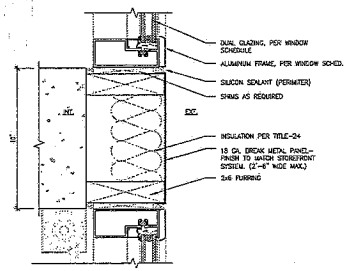

20 Break Metal at Horizontal Mullion
3" = 1'-0"

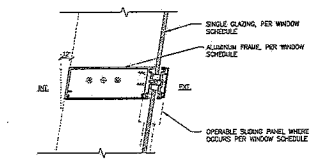

16 Storefront at Horizontal Mullion (Single Glaze)
3" = 1'-0"

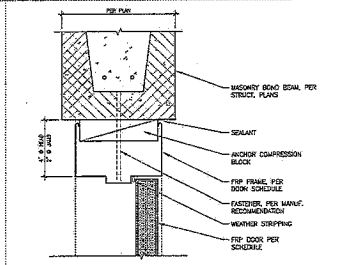

12 Interior FRP Door Head at Masonry
3" = 1'-0"
(Jamb Similar)

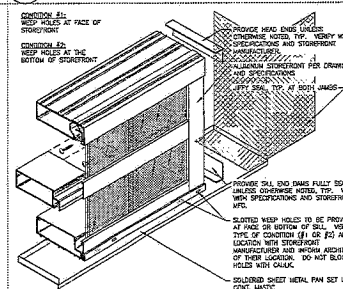

8 Storefront Detail (Sim. For Center Glazed System)
6" = 1'-0"

© COPYRIGHT Dosker Ki, 2014 ed 1 USA

Properties of Jones. These drawings and designs are protected by common law copyright. All parties who copy, exhibit or use without authorization and negotiation with Dosker y Asociados Arquitectos & Urbanistas S.C. and/or its successors in interest shall be subject to legal action.

Dosker y Asociados Arquitectos & Urbanistas S.C.
2160 West Washington, Suite 200
San Diego, California 92140
Tel 619.692.9393
Fax 619.692.9292
www.dosker.com

A-22

SPEC. NO. 8147

LICENSED ARCHITECT
No. C11174
REN 8.30.15
STATE OF CALIFORNIA

PLANS FOR THE CONSTRUCTION OF
South Mission Beach Lifeguard Station

Details — A5.3

CITY OF SAN DIEGO, CALIFORNIA
ENGINEERING & CAPITAL PROJECTS
ARCHITECTURAL ENGINEERING & CONTRACTS DIVISION
SHEET 40 OF 54 SHEETS

WBS S-00791

APPROVED 10/13/2014
FOR CITY ENGINEER DATE

SUBMITTED BY
JINAD SLEIMAN
PROJECT MANAGER

DESCRIPTION	BY	APPROVED	DATE	FILMED
ORIGINAL	TM/IT			

YOUSIF BENYAMIN
PROJECT ENGINEER
212-1093
CCS27 COORDINATES
1850-0253
CCS83 COORDINATES

CONTRACTOR _____ DATE STARTED _____
INSPECTOR _____ DATE COMPLETED _____

32849-40-D

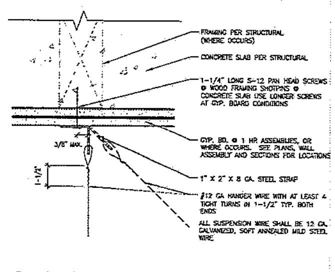

17 Bracing / Hanger Wire Attachment
3"= 1'-0"

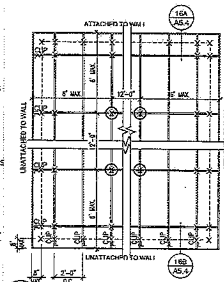

SUSPENDED CEILING NOTES:

1. GRID TO BE HEAVY DUTY
2. GRID TO BE ATTACHED TO TWO ADJACENT WALLS
3. CEILINGS WITHOUT RIGID BRACING MUST HAVE 2" OVERSIZE SPRINKLER TRIM RINGS
4. CEILINGS OVER 2,500 SF MUST HAVE SEISMIC SEPARATION JOINTS
5. VERTICAL HANGER WIRES:
   - SHALL BE 12 GA.
   - NOT GRATER THAN 4'-0" O.C.
   - SHALL BE PLUMB WITIN 1 IN 6
   - TIED WITH THREE TURNS IN 3" MAX.
6. CABLE TRAYS AND CONDUITS SHALL BE INDEPENDENTLY SUPPORTED AND BRACED
7. FIXTURES GREATER THAN 56 LBS. SHALL BEINDEPENDENTLY SUPPORTED AND BRACED FROM BLDG. STRUCTURE
8. BRACING SHALL BE INDEPENDENT OF THE CEILING SPLAY BRACING SYSTEM

X = HANGER WIRE

O = LATERAL BRACING (EVERY 12'-0" O.C. OR 144 SF)

13 Suspended Ceiling Grid Support
1/4"= 1'-0"

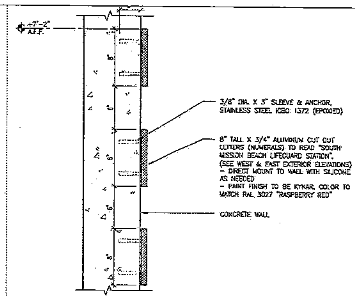

9 Building Signage - (Address Numbers Similar)
1-1/2"= 1'-0"

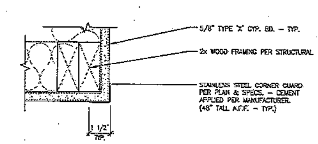

5 Corner Guard
3"= 1'-0"

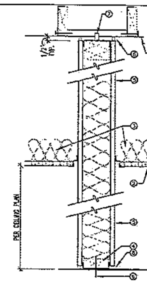

① LINE OF STRUCT. / FIRE RATED CEILING ASSEMBLY / ROOF SHEATHING ABOVE.
② CEILING PER PLANS
③ 3 1/2" THICK X 48" WIDE BATT INSULATION EA SIDE FOR SOUND CONTROL
④ 2X OR METAL FRAMING (PER STRUCT.)- FULL HT. @ 16" O.C. U.N.O. 3-1/2" SOUND BATT INSULATION. SEE WALL SCHEDULE
⑤ 5/8" TYPE 'X' GYP BD EACH SIDE, U.N.O. - EXTEND TO UNDERSIDE OF ROOF / CEILING / FLOOR ASSEMBLY ABOVE
⑥ POWER DRIVEN PINS NOT IDENTIFIED PER STRUCTURAL DWGS., USE "RAMSET" POWER DRIVEN PINS, ICBO No. ER-1147, OR EQUAL FASTENER. FOR 2" NOMINAL SILL PLATE ANCHORAGE, SHANK LENGTH SHALL BE 2.875", SHANK DIAMETER .146" OR .152", AND MAX. SPACING 1.5 FT. EXTERIOR AND INTERIOR SHEAR WALLS, AND 3 FT. FOR INTERIOR NONSHEAR WALLS. VERIFY WITH STRUCTURAL DRAWINGS.
⑦ CONNECTION PER STRUCT. SEE STRUCT.
⑧ @ RATED CONDITIONS. APPROVED FIRE RATED SEALANT EACH SIDE-TYP. AROUND PERIMETER

1 Typical Interior Partition Wall
1-1/2"= 1'-0"

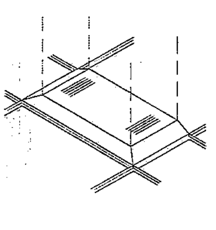

NOTE:

1. FIXTURES WEIGHING <10 LBS. SHALL HAVE (1) 12 GA. SLACK HANGER WIRE CONNECTED FROM THE FIXTURE TO STRUCTURE ABOVE
2. FIXTURES WEIGHING 10 LBS > X < 56 LBS. SHALL HAVE (2) GA. SLACK HANGER WIRES ATTACHED AT OPPOSITE CORNERS OF THE LIGHT FIXTURE TO STRUCTURE ABOVE.
3. FIXTURES >56 LBS. SHALL BE SUPPORTED BY TAUT WIRES DIRECTLY FROM THE STRUCTURE ABOVE. WIRE SHALL BE CAPABLE OF SUPPORTING 4 TIMES THE WEIGHT OF FIXTURE.
4. PENDANT FIXTURES SHALL BE DIRECTLY SUPPORTED FROM STRUCTURE ABOVE USING 9 GA. WIRE OR APPROVED ALTERNATE SUPPORT WITHOUT USING THE CEILING SUSPENSION FOR DIRECT SUPPORT.
5. TANDEM FIXTURES MAY UTILIZE COMMON WIRES.

18 Typical Fixture Support
1" = 1"

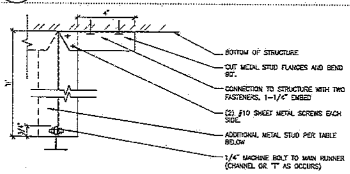

"H" MAX. LENGTH	PLAN VIEW	COMPRESSION STRUT
5'-10"	o	1/2" DIA. CONDUIT (EMT)
7'-3"	o	3/4" DIA. CONDUIT (EMT)
9'-9"	O	1" DIA. CONDUIT (EMT)
12'-0"	□	(1) 162S125-33 (1-5/8" X 20 GA.)

"H" MAX. LENGTH	PLAN VIEW	COMPRESSION STRUT
15'-0"	⌶	BACK TO BACK STUDS* (2) 162S125-33 (1-5/8" X 20 GA.)
13'-5"	]	(1) 250S125-33 (2-5/8" X 20 GA.)
15'-0"	⌶	BACK TO BACK STUDS* (2) 250S125-33 (2-5/8" X 20 GA.)

* JOINED W/ #10 SHEET METAL SCREWS

14 Compression Strut
N.T.S.

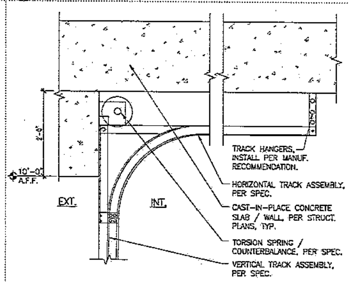

10 Sectional Roll-Up Door (Head)
1-1/2"= 1'-0"

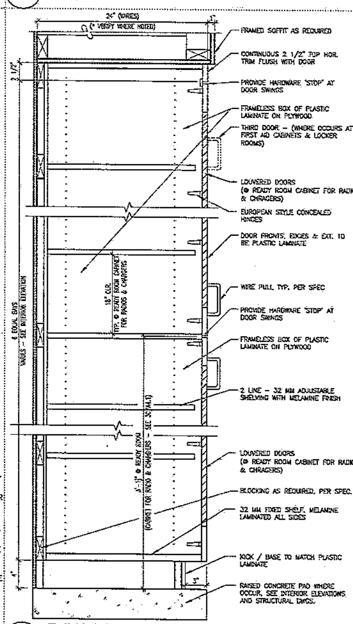

7 Full Height Cabinet Detail
1-1/2"= 1'-0"

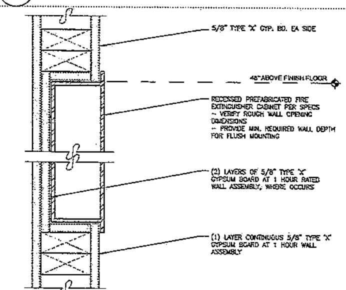

2 Extinguisher /Access Cabinet
3"= 1'-0"

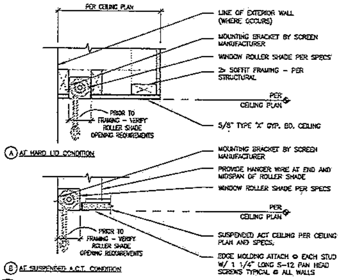

19 Roller Shade - (Recessed)
1-1/2"= 1'-0"

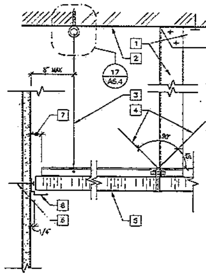

1 COMPRESSION STRUT AND ANCHORAGE PER DETAIL: 14/A5.4

2 STRUCTURE PER PLAN

3 12 GA VERTICAL HANGER WIRE @ 48" EA WAY W/3 TIGHT TURNS, IN 3" MAX. EA SIDE

4 (4) 12 GA SPLAY BRACING WIRE LOCATED @ STRUTS W/4 TIGHT TURNS, IN 3" MAX. EACH SIDE TYP.

5 ACOUSTIC CEILING TILE

6 EDGE MOLDING ATTACH @ EACH STUD W/ 1 1/4" LONG S-12 PAN HEAD SCREWS TYPICAL @ ALL WALLS

7 UNATTACHED WALLS: 3/4" CLR @ TWO ADJACENT WALLS, TYP. OR SLIP CLIP

8 ATTACHED WALLS: POP RIVET ATTACHMENT TO MAIN CROSS RUNNERS @ 2 ADJACENT WALLS

15 Acoustic Tile Ceilng Support
3"= 1'-0"

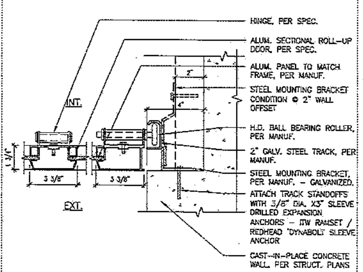

11 Sectional Roll-Up Door (Jamb)
3"= 1'-0"

A-23

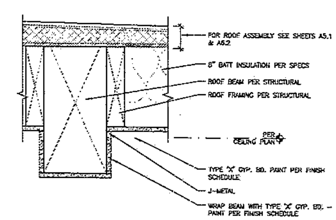

20 Header at Gyp. Bd. / Acoustical Panel
1-1/2"= 1'-0"

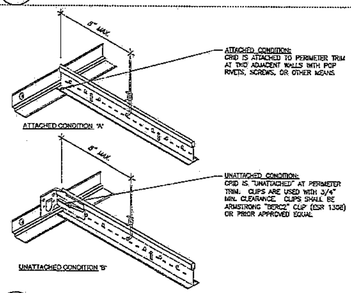

16 Seismic Perimeter Conditions
3"= 1'-0"

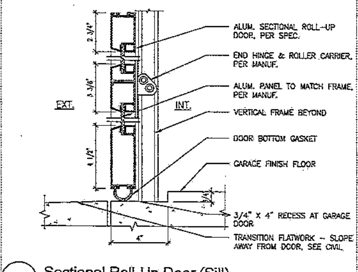

12 Sectional Roll-Up Door (Sill)
3"= 1'-0"

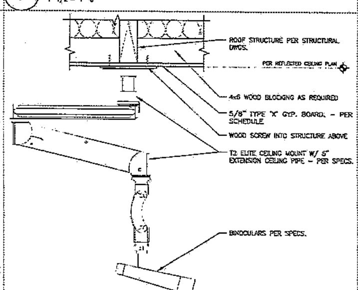

8 Binocular Ceiling Mount
1-1/2"= 1'-0"

Domusy+Associates Architects @ domusstudio
2150 West Washington, Suite 303
San Diego, California 92110
Tel 619.692.9393
Fax 619.692.9394
domusstudio.com

SPEC. NO 8147

LICENSED ARCHITECT WAYNE HOLTAN No. C12113 REN 9.30.15 STATE OF CALIFORNIA

PLANS FOR THE CONSTRUCTION OF

South Mission Beach Lifeguard Station

Details | A5.4

CITY OF SAN DIEGO, CALIFORNIA
ENGINEERING & CAPITAL PROJECTS
ARCHITECTURAL ENGINEERING & CONTRACTS DIVISION
SHEET 41 OF 94 SHEETS

APPROVED: FOR CITY ENGINEER — 10/13/2014 DATE

WBS S-00791

SUBMITTED BY: JIHAD SLEIMAN PROJECT MANAGER

DESCRIPTION	BY	APPROVED	DATE	FILMED
ORIGINAL	WH/TT			

YOUSIF BENYAMIN PROJECT ENGINEER

218-1693 CCS27 COORDINATES

1858-6253 CCS83 COORDINATES

CONTRACTOR ____ DATE STARTED ____
INSPECTOR ____ DATE COMPLETED ____

32849-41-D

©COPYRIGHT October 13, 2014 at 8:12AM
Proprietary design. These drawings and design are protected by common law copyright. All patentable material contained herein and originating with Domusy + Associates Architects @ domusstudio LLP shall be the property of Domusy + Associates Architects @ domusstudio LLP

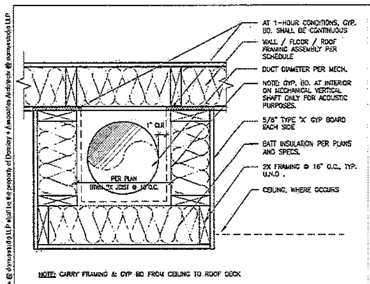

17 Shaft / Soffit Framing
3"= 1'-0"

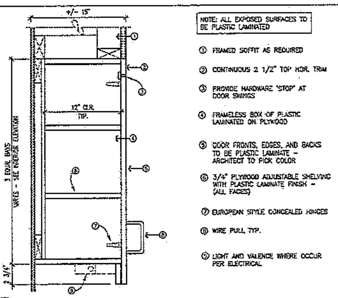

13 Upper Cabinets with Doors
1 1/2"= 1'-0" 06200-01

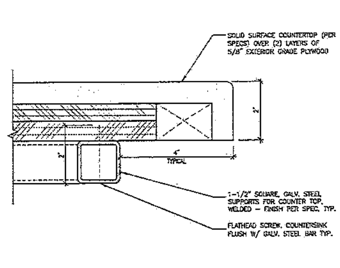

9 Typical Counter (Front / Side Edge)
6"= 1'-0" workcounter edges

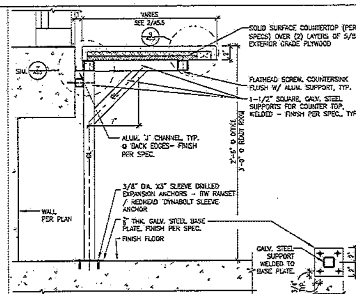

5 Typical Work Counter
1 1/2"= 1'-0" workcounter

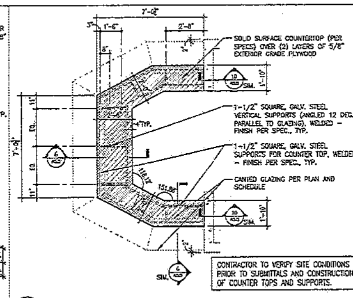

1 Oberservation Work Counter (Plan)
1/4"= 1'-0"

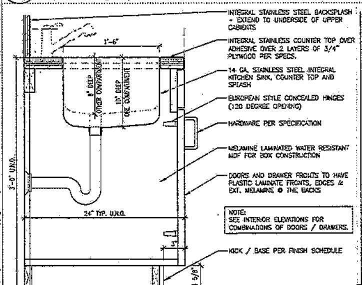

18 Kitchen Sink Cabinet - Countertop Detail
1-1/2"= 1'-0"

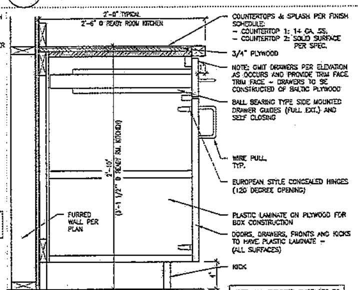

14 Lower Cabinets
1 1/2"= 1'-0" 06200-03

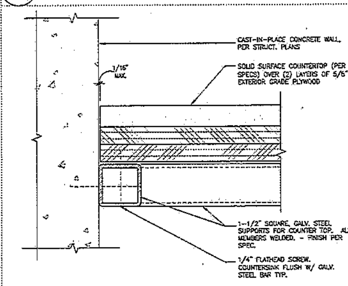

10 Counter Edge at Wall
6"= 1'-0" workcounter rear edge

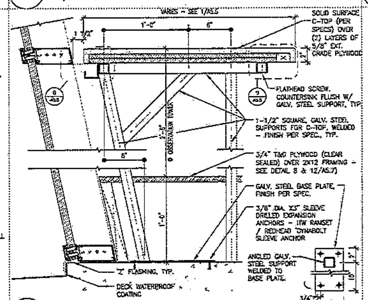

6 Work Counter at Angled Wall
1 1/2"= 1'-0" workcounter

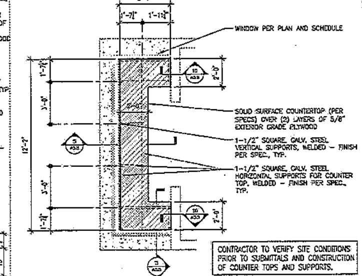

2 Ready Room Work Counter (Plan)
1/4"= 1'-0"

U.L. FIRESTOP SYSTEM NO. C-AJ-1551
F RATINGS – 2 HOUR
T RATING – 0 HOUR
W RATING – CLASS 1 (SEE ITEM 4)

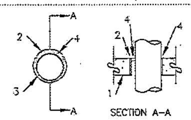

1. FLOOR OR WALL ASSEMBLY – MIN 2-1/2 IN. (64 MM) THICK REINFORCED LIGHTWEIGHT OR NORMAL WEIGHT (100-150 PCF OR 1600-2400 KG/M) CONCRETE FLOORS OR MIN 3-1/2" (89 MM) THICK REINFORCED LIGHTWEIGHT OR NORMAL WEIGHT CONCRETE WALLS. FLOOR ASSEMBLY MAY ALSO BE CONSTRUCTED OF ANY MIN 6 IN. (152 MM) THICK UL CLASSIFIED HOLLOW-CORE PRECAST CONCRETE UNITS. WALL MAY ALSO BE CONSTRUCTED OF ANY UL CLASSIFIED CONCRETE BLOCKS. MAX DIA. OF OPENING 28 IN. (711 MM). MAX DIA. OF OPENING IN FLOORS CONSTRUCTED OF HOLLOW-CORE CONCRETE IS 7 IN. (78 MM). SEE CONCRETE BLOCKS (CAZT) AND PRECAST CONCRETE UNITS (CFTV) CATEGORIES IN FIRE RESISTANCE DIRECTORY FOR NAMES OF MANUFACTURERS.
2. STEEL SLEEVE – (OPTIONAL) – NOM 28 IN. (711 MM) DIA. (OR SMALLER) SCHEDULE 10 (OR HEAVIER) STEEL SLEEVE CAST OR GROUTED INTO FLOOR OR WALL ASSEMBLY. STEEL SLEEVE MAY BE INSTALLED FLUSH OR MAY PROJECT MAX. 2 IN. (51 MM) BEYOND THE FLOOR OR WALL SURFACES.
3. THROUGH PENETRANT – ONE METALLIC PIPE, CONDUIT, TUBING OR FLEXIBLE METAL PIPING INSTALLED CONCENTRICALLY OR ECCENTRICALLY WITHIN OPENING. ANNULAR SPACE BETWEEN PENETRANT AND PERIPHERY OF OPENING OR SLEEVE SHALL BE MIN OF 0 IN. (0MM, POINT OF CONTACT) TO MAX. 3-7/8 IN. (98 MM). PENETRANT TO BE RIGIDLY SUPPORTED ON BOTH SIDES OF FLOOR OR WALL ASSEMBLY. THE FOLLOWING TYPES AND SIZES OF PENETRANTS MAY BE USED:
   A. STEEL PIPE – NOM. 24 IN. (610 MM) DIA. (OR SMALLER) SCHEDULE 10 (OR HEAVIER) STEEL PIPE.
   B. IRON PIPE – NOM. 24 IN.C (610 MM) DIA. (OR SMALLER) CAST OR DUTILE IRON PIPE.
   C. CONDUIT – NOM. 6 IN. (152 MM) DIA. (OR SMALLER) STEEL CONDUIT OR NOM 4 IN. (102 MM) DIA. (OR SMALLER) STEEL ELECTRICAL METALLIC TUBING.
   D. COPPER TUBING – NOM. 6 IN. (152 MM) DIA. (OR SMALLER) TYPE L (OR HEAVIER COPPER TUBING).
   E. COPPER PIPE – NOM. 6 IN. (152 MM) DIA. (OR SMALLER) REGULAR (OR HEAVIER COPPER PIPE.
   F. THROUGH PENETRATING PRODUCT – FLEXIBLE METAL PIPING – THE FOLLOWING TYPES OF STEEL FLEXIBLE METAL GAS PIPING MAY BE USED:
   OMEGA FLEX INC.
   1) NOM. 2 IN. (51 MM) DIA. (OR SMALLER) STEEL FLEXIBLE METAL GAS PIPING. PLASTIC COVERING ON PIPING MAY OR MAY NOT BE REMOVED ON BOTH SIDES OF FLOOR OR WALL ASSEMBLY.
   GASTITE, DIV OF TITEFLEX
   2) NOM. 1 IN. (25 MM) DIA. (OR SMALLER) STEEL FLEXIBLE METAL GAS PIPING. PLASTIC COVERING ON PIPING MAY OR MAY NOT BE REMOVED ON BOTH SIDES OF FLOOR OR WALL ASSEMBLY.
   WARD MFG. INC.
   3) NOM. 1 IN. (25 MM) DIA. (OR SMALLER) STEEL FLEXIBLE METAL GAS PIPING. PLASTIC COVERING ON PIPING MAY OR MAY NOT BE REMOVED ON BOTH SIDES OF FLOOR OR WALL ASSEMBLY.
4. FIRESTOP SYSTEM – THE DETAILS OF THE FIRESTOP SYSTEM SHALL BE AS FOLLOWS:
   A. PACKING MATERIAL – (OPTIONAL, NOT SHOWN) – POLYETHYLENE BACKER ROD OR MIN. 1 IN.C (25 MM) THICKNESS OF MIN. 4 PCF (64 KG/M) MINERAL WOOL BATT INSULATION FIRMLY PACKED INTO OPENING AS A PERMANENT FORM. PACKING MATERIAL TO BE RECESSED FROM TOP SURFACE OF FLOOR OR FROM BOTH SURFACES OF WALL AS REQUIRED TO ACCOMMODATE THE REQUIRED THICKNESS OF FILL MATERIAL. IN FLOORS CONSTRUCTED OF HOLLOW-CORE CONCRETE, PACKING MATERIAL TO BE RECESSED FROM TOP AND BOTTOM SURFACES OF FLOOR AS REQUIRED TO ACCOMMODATE THE REQUIRED THICKNESS OF FILL MATERIAL.
   B. FILL, VOID OR CAVITY MATERIALS – CAULK OR SEALANT – MIN. 1 IN. (25 MM) THICKNESS OF CAULK APPLIED WITHIN THE ANNULUS, FLUSH WITH TOP SURFACE OF FLOOR OR WITH BOTH SURFACES OF WALL. IN FLOORS CONSTRCUTED OF HOLLOW-CORE CONCRETE, MIN 1 IN. (25 MM) THICKNESS OF CAULK APPLIED WITHIN THE ANNULUS, FLUSH WITH TOP AND BOTTOM SURFACES OF FLOOR. MIN. 1/4 IN. (6 MM) DIA. BEAD OF CAULK APPLIED TO THE PENETRANT/CONCRETE OR PENETRANT/SLEEVE INTERFACE AT THE POINT OF CONTACT LOCATION ON THE TOP SURFACE OF FLOOR OR BOTH SURFACES OF WALL OR HOLLOW-CORE FLOOR.

20 2 HR. Firestop For Various Size Metallic Pipe Thru Concrete Wall / CMU Wall
1"= 1'-0"

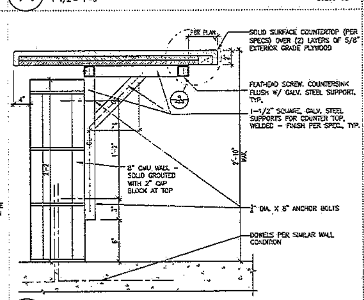

15 Reception Work Counter
1 1/2"= 1'-0" workcounter

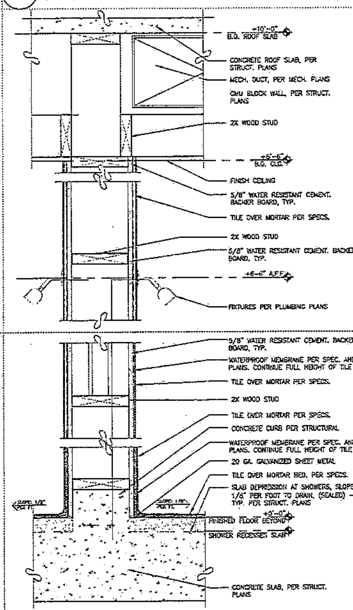

12

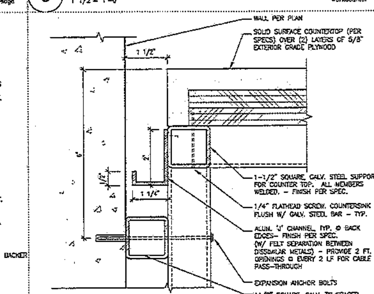

7 Typical Counter Back Edge
6"= 1'-0" workcounter rear edge

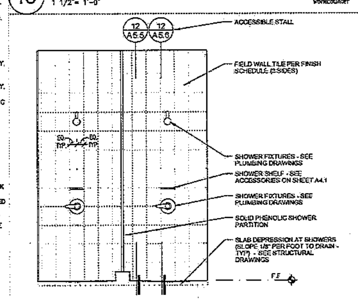

16 Typical Shower Elevation
1/2"= 1'-0"

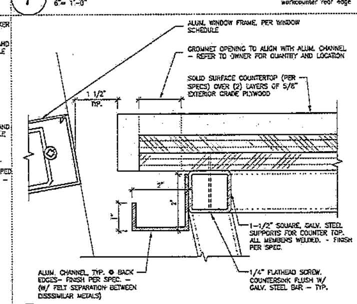

8 Coutner Back Edge at Angled Glazing
6"= 1'-0" workcounter rear edge

A-24

Domusy + Associates Architects @ domusstudio
2150 West Washington, Suite 303
San Diego, California 92110
Tel 619.692.9393
Fax 619.692.9394
domusstudio.com

SPEC. NO. 8147

LICENSED ARCHITECT WAYNE HOLTAN No. C12113 REN 9.30.15 STATE OF CALIFORNIA

PLANS FOR THE CONSTRUCTION OF
South Mission Beach Lifeguard Station

Details | A5.5

CITY OF SAN DIEGO, CALIFORNIA
ENGINEERING & CAPITAL PROJECTS
ARCHITECTURAL ENGINEERING & CONTRACTS DIVISION
SHEET 42 OF 94 SHEETS
APPROVED: [signature] FOR CITY ENGINEER
10/13/2014 DATE

WBS S-00791
SUBMITTED BY: JIHAD SLEIMAN PROJECT MANAGER
YOUSIF BENYAMIN PROJECT ENGINEER
218-1693 CCS27 COORDINATES
1858-6253 CCS83 COORDINATES

DESCRIPTION	BY	APPROVED	DATE	FILMED
ORIGINAL	WH/TT			

CONTRACTOR ________ DATE STARTED ________
INSPECTOR ________ DATE COMPLETED ________

32849-42-D

© COPYRIGHT October 13, 2014 at 8:13AM
Proprietary design: These drawings and design are protected by common law copyright. All patentable material contained herein and originating with Domusy + Associates Architects @ domusstudio LLP shall be the property of Domusy + Associates Architects @ domusstudio LLP

ADDENDUM "A"

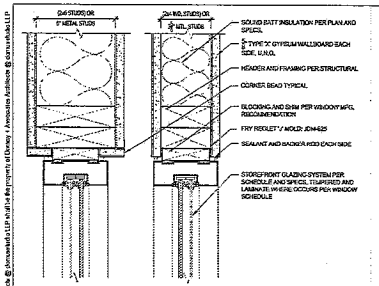

17 Interior Storefront Window Head-Jamb (Typ.)
3" = 1'-0"

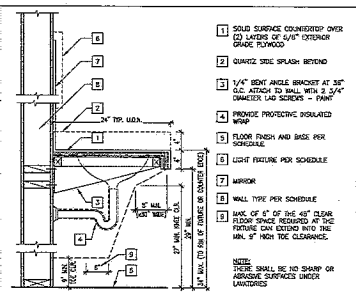

13 Lavatory & Locker Room Counter
NTS

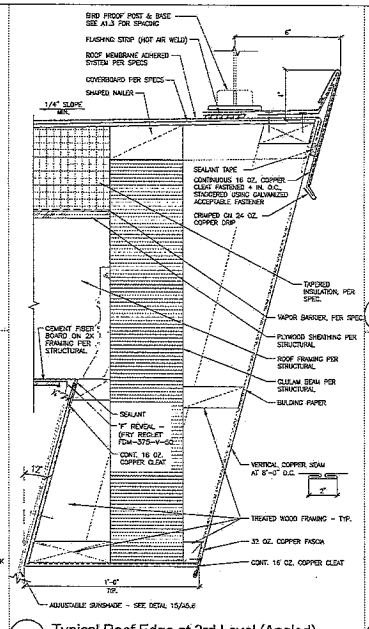

10 Typical Roof Edge at 3rd Level (Angled)
3" = 1'-0"

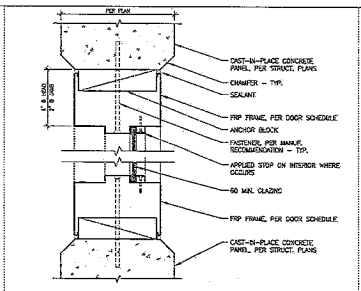

5 Interior FRP Window
3" = 1'-0" (Jamb Similar)

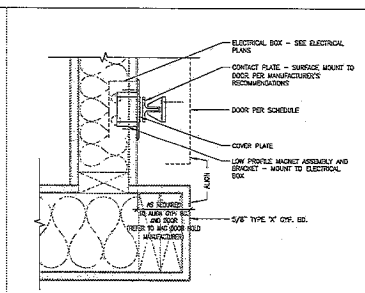

1 Electromagnetic Door Holder
3" = 1'-0"

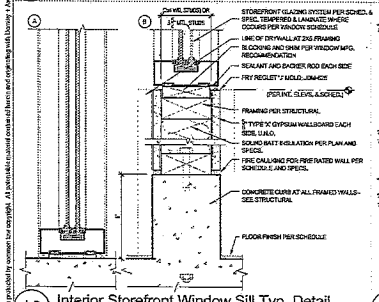

18 Interior Storefront Window Sill Typ. Detail
3" = 1'-0"

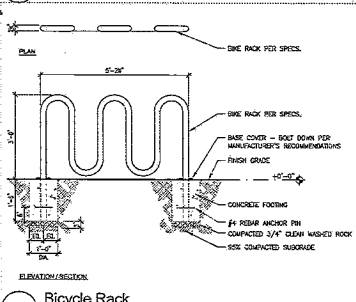

14 Bicycle Rack
1/2" = 1'-0"

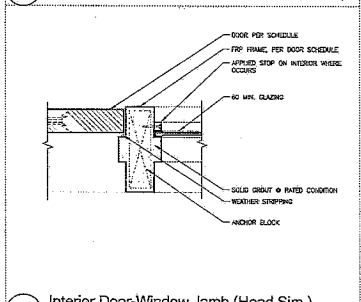

6 Interior Door-Window Jamb (Head Sim.)
3" = 1'-0"

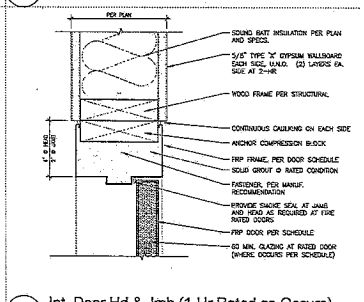

2 Int. Door Hd & Jmb (1-Hr Rated as Occurs)
3" = 1'-0"

19

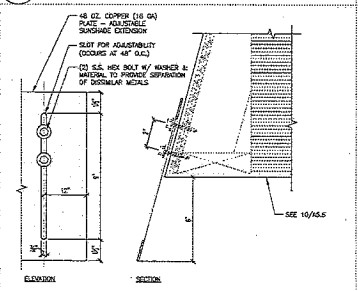

15 Sunshade Extension
3" = 1'-0"

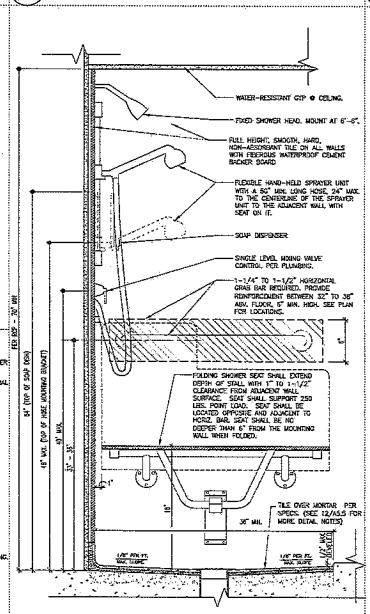

12 Accessible Shower Entry Section
1-1/2" = 1'-0"

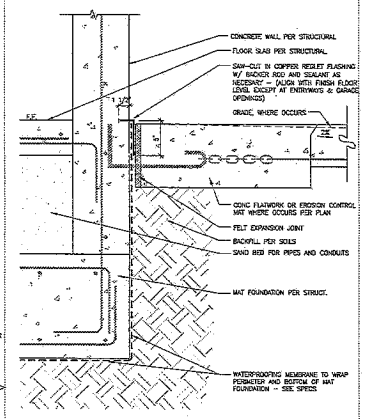

8 Below Wall Waterproofing
1 1/2" = 1'-0"

20

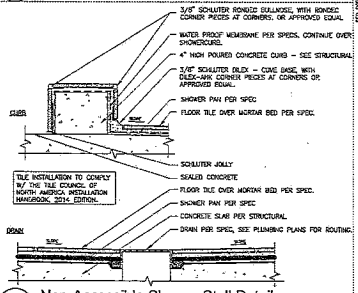

16 Non-Accessible Shower Stall Details
3" = 1'-0"

ADDENDUM "A"

November 10, 2014
South Mission Beach Lifeguard Station

Property of Dougherty + Associates Architects and/or consultants. All concepts, designs and drawings are the property of Dougherty + Associates Architects and/or consultants and may not be used in whole or in part without the written permission of Dougherty + Associates Architects. © COPYRIGHT Dougherty + Associates Architects, 2014 and 2015

Dougherty + Associates Architects
3120 Fifth Avenue, Suite 303
San Diego, California 92103
Tel 619.692.1093
Fax 619.692.9396
dougherty-aia.com

A-25

SPEC. NO. 8147

LICENSED ARCHITECT
No. C-21113
REN 9.30.15
STATE OF CALIFORNIA

PLANS FOR THE CONSTRUCTION OF
South Mission Beach Lifeguard Station

Details A5.6

CITY OF SAN DIEGO, CALIFORNIA
ENGINEERING & CAPITAL PROJECTS
ARCHITECTURAL ENGINEERING & CONTRACTS DIVISION
SHEET 43 OF 94 SHEETS

WBS S-00791

SUBMITTED BY: JAMAD SLEIMAN, PROJECT MANAGER

APPROVED: _____ 10/13/2014
FOR CITY ENGINEER DATE

DESCRIPTION	BY	APPROVED	DATE	PLMTD
ORIGINAL	MM/TT			

YOUSIF SEMYAAN, PROJECT ENGINEER
218-1053
CS27 COORDINATES
1858-6253
CS83 COORDINATES

CONTRACTOR _____ DATE STARTED _____
INSPECTOR _____ DATE COMPLETED _____

32649-43-D

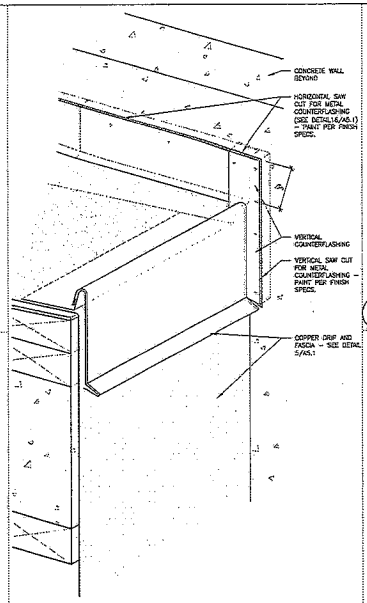

10 Roof Edge to Wall Termination
NTS

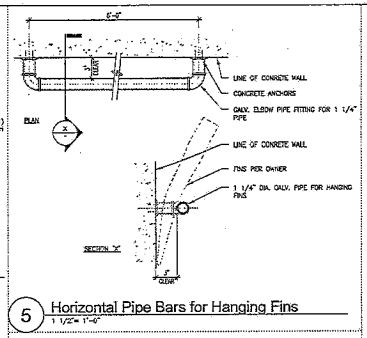

5 Horizontal Pipe Bars for Hanging Fins
1 1/2"= 1'-0"

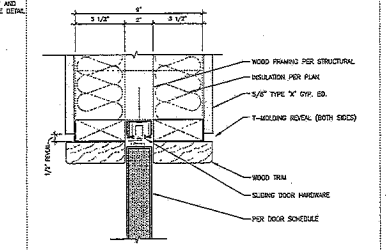

6 Pocket Door - (Head)
3"= 1'-0"

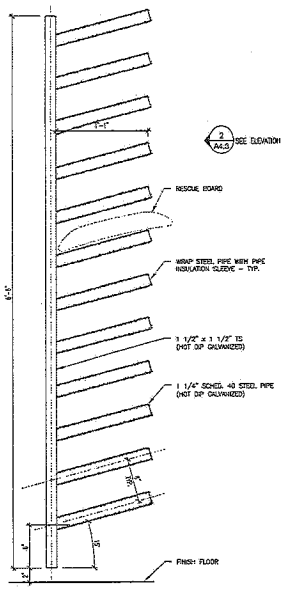

2 Rescue Board Rack
1 1/2"= 1'-0"

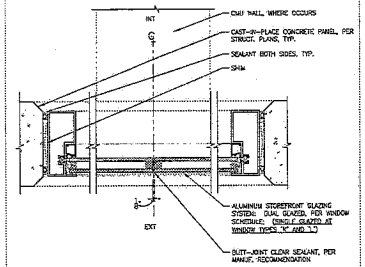

11 Storefront at Butt-Joint Glazing
3"= 1'-0"

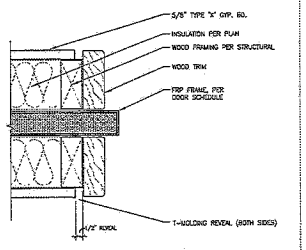

7 Pocket Door - (Jamb)
3"= 1'-0"

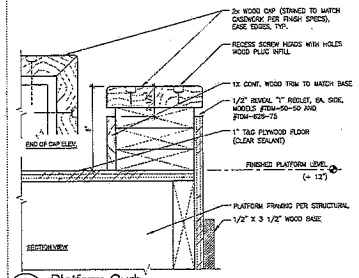

12 Platform Curb
3"= 1'-0"

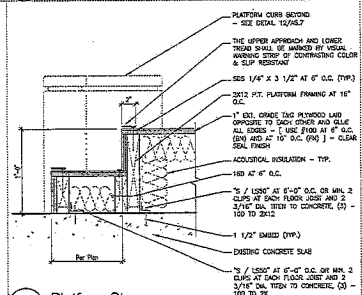

8 Platform Steps
1 1/2"= 1'-0"

A-26

Deasley + Associates Architects @ commando
2150 West Washington, Suite 303
San Diego, California 92110
tel 619.692.1093
fax 619.692.9394
deasley.com

SPEC. NO. 8147

LICENSED ARCHITECT — Exp. 08-31-15 — No. C-21153 — REN 9.30.13 — STATE OF CALIFORNIA

PLANS FOR THE CONSTRUCTION OF
South Mission Beach Lifeguard Station

Details — A5.7

CITY OF SAN DIEGO, CALIFORNIA
ENGINEERING & CAPITAL PROJECTS
ARCHITECTURAL ENGINEERING & CONTRACTS DIVISION
SHEET 44 OF 64 SHEETS

WBS S-00791

APPROVED
FOR CITY ENGINEER — DATE 10/13/2014

SUBMITTED BY:
ARNO BLEIMAN
PROJECT MANAGER

DESCRIPTION	BY	APPROVED	DATE	PLACED
ORIGINAL	MM/TT			

YOUSUF BENYAMIN
PROJECT ENGINEER
210-1853
CGS27 COORDINATES
1858-6253
CGS83 COORDINATES

CONTRACTOR
INSPECTOR
DATE STARTED
DATE COMPLETED

32849-44-D

Page 52 of 102

Proprietary design: These drawings and designs are protected by common law copyright. All protectable material considered trade secret or proprietary with Deasley + Associates Architects @ commando and is the property of Deasley + Associates Architects @ commando LLP

©COPYRIGHT October 15, 2014 at 8:44AM

Commercial Finish Notes

1. VERIFY ALL CARPET AND/OR OTHER FLOOR MATERIALS, SEAMS AND/OR JOINTS LAYOUT WITH ARCHITECT PRIOR TO INSTALLATION.
2. ALL COLORS SHALL BE SELECTED BY ARCHITECT (I.E. PLASTIC LAMINATE, HARDWARE, PAINT, CARPET TILE, ETC.) AND VERIFIED IN WRITING WITH ARCHITECT PRIOR TO ORDERING.
3. FLOOR AND BASE MATERIAL SHALL CONTINUE INTO ADJACENT UNSCHEDULED CLOSETS AND SERVICE ROOMS TO MATCH MATERIAL AT SCHEDULED ROOMS
4. INSTALL AND PAINT INTERIOR GYP. BOARD IN ALL UNSCHEDULED CLOSETS AND SERVICE ROOMS.
5. CONTRACTOR SHALL USE PREFORMED VINYL BASE CORNER AT ALL CORNERS BY APPROVED MANUFACTURERS WHERE VINYL BASE IS SCHEDULED.
6. UNLESS OTHERWISE NOTED (U.O.N.) WHERE DISSIMILAR FLOOR MATERIALS MEET, CONTRACTOR SHALL RAISE ONE AS REQUIRED AND/OR DIRECTED BY ARCHITECT TO INSURE A LEVEL TRANSITION; FILLER MATERIAL TO BE APPROVED BY ARCHITECT PRIOR TO INSTALLATION.
7. CONTRACTOR SHALL USE 5/8" THICK TYPE 'X' GYP. BOARD UNLESS OTHERWISE NOTED.
8. CONTRACTOR SHALL USE EPOXY PAINT FOR GYP. BOARD FOR ALL INTERIOR SCHEDULED JANITOR CLOSETS.
9. UNLESS OTHERWISE NOTED: CONTRACTOR SHALL COMPENSATE TILE PATTERN SO AS NEVER TO UTILIZE TILE WHICH HAS BEEN CUT TO LESS THAN HALF THEIR ORIGINAL SIZE.
10. CONTRACTOR SHALL USE 'CORNER', 'J', 'L', 'T' AND 'CLIP' MOLDING AT ALL GYP. BOARD AND OR PLASTER CONNECTIONS AND TERMINATIONS TO DISSIMILAR MATERIALS.
11. PAINTER SHALL EXAMINE ALL SURFACES TO BE PAINTED BEFORE BEGINNING PAINTING WORK. WORK OF OTHER TRADES THAT HAS BEEN LEFT OR INSTALLED IN A CONDITION NOT SUITABLE TO RECEIVE PAINT, STAIN, OR OTHER FINISH SHALL BE REPAIRED AND/OR CORRECTED BY THE APPLICABLE TRADE PRIOR TO PAINTING. PAINTED FINISH SHALL BE FREE OF CRACKS, CHECKS, DIVOTS, HAMMER MARKS, AND OTHER IMPERFECTIONS. PAINTING OF DEFECTIVE OR UNSUITABLE SURFACE IMPLIES ACCEPTANCE OF THE SURFACE BY THE PAINTER, THUS MAKING THE PAINTER RESPONSIBLE FOR PERFORMING ALL NECESSARY CORRECTIVE MEASURES TO ACHIEVE DEFECT FREE FINISH.
12. ALL EXPOSED HVAC DUCTS AND GRILLES SHALL BE PAINTED TO MATCH ADJACENT SURFACE UNLESS OTHERWISE NOTED ON PLANS.
13. SEE INTERIOR ELEVATIONS FOR EXTENT OF TILE.
14. WALL AND CEILING MATERIALS SHALL NOT EXCEED THE FLAME SPREAD CLASSIFICATION IN UBC TABLE 42-B. SUSPENDED CEILINGS SHALL COMPLY WITH UBC TABLES 47-A AND 23-P. SEE SPEC. FOR MORE INFO. ON CARPET CATEGORY, IF CARPET IS USED.
15. ALL INTERIOR FINISHES AND DECORATIVE MATERIALS SHALL BE MAINTAINED IN A FLAME RETARDANT CONDITION. (C.A.C. T 19, SEC. 1.14, 3.06, 3.21, AND U.F.C. SEC. 11.204, SEC. 25.103, SEC. 25.104).
16. ALL STEEL TO REMAIN EXPOSED SHALL BE GROUND SMOOTH, PRIMED AND PAINTED TYPICAL, UNLESS OTHERWISE NOTED.
17. CONTRACTOR PROVIDES AND INSTALLS HORIZONTAL BLINDS AT ALL GLAZED OPENINGS, INCLUDING DOORS, WHERE INDICATED ON FINISH SCHEDULE.
18. KITCHEN FINISHES REQUIRING HEALTH DEPARTMENT APPROVAL TO BE AS FOLLOWS UNLESS OTHERWISE NOTED ON PLANS:
   a. FLOORING– SMOOTH QUARRY TILE, QUARRY TILE WITH NON SKID MATERIAL (RESTRICTED TO TRAFFIC AREAS ONLY).
   b. BASE– 6" COVED QUARRY TILE WITH 3/8" MINIMUM RADIUS INTEGRAL COVE.
   c. WALLS– 5/8" MOISTURE RESISTANT TYPE "X" TYP. BOARD WITH SMOOTH FINISH. PAINT WITH SEMI GLOSS ENAMEL, LIGHT IN COLOR. WALLS BEHIND SINKS AND IN DISH WASHING AREA TO BE COVERED WITH LIGHT COLORED FRP AT LEAST 8 FEET HIGH. WALLS IN COOKING AREA AND BY HOOD TO BE COVERED WITH STAINLESS STEEL. SEE KITCHEN DRAWINGS FOR MORE INFO. PROVIDE STAINLESS STEEL CORNER GUARDS AT ALL WALL CORNERS
   d. CEILING– 2' x 4' DROPPED CEILING TILE SYSTEM WITH SMOOTH, NON ABSORBENT FINISH, LIGHT COLORED, EASILY CLEANABLE FINISH.
19. CONTRACTOR SHALL PROVIDE AND INSTALL R-11 BATT SOUND INSULATION INSIDE ALL WALL CAVITIES SURROUNDING ALL OFFICES, CLASSROOMS AND RESTROOMS, TYP.
20. ALL TILE TO CARPET, OR NATURAL STONE TO CARPET, AND ALL OTHER CHANGE OF MATERIAL FLOORING TRANSITIONS SHALL HAVE METAL EDGE, AS MANUFACTURED BY SCHLUTER, "SCHIENE–E", OR EQUAL. RAMP UNDER SHEET GOODS 24" MINIMUM, TO MAKE SMOOTH TRANSITION, AS REQUIRED. REVIEW UNIQUE CONDITIONS WITH ARCHITECT.
21. WHEN A REGLET MEETS AN OUTSIDE CORNER OF A WALL OR CEILING, CONTINUE REGLET AROUND THE OUTSIDE CORNER TO THE INSIDE CORNER BEYOND.
22. VERIFY ALL ACCENT WALL PAINT COLORS AND LOCATIONS WITH ARCHITECT. ALL CHANGES IN WALL COLORS SHOULD OCCUR AT INSIDE CORNERS WHERE POSSIBLE. PARTIAL RETURN WALLS ADJACENT TO ACCENT WALLS MAY NEED TO BE PAINTED THE ACCENT COLOR IN ORDER TO TERMINATE AT AN INSIDE CORNER. THESE LOCATIONS WILL BE AT THE DISCRETION OF THE ARCHITECT.
23. ALL STAIRS TO HAVE CARPET AND PAD PER SPECIFICATION – UNLESS OTHERWISE NOTED.
24. FINISHES ARE AS FOLLOWS:
   P1 FLAT LATEX PAINT
   P2 EGGSHELL LATEX PAINT
   P3 SATIN LATEX PAINT
   P4 SEMI-GLOSS LATEX PAINT
   P5 GLOSS LATEX PAINT
   P6 STAIN
   PC ACOUSTICAL CEILING WITH FACTORY FINISH
   V UNFINISHED

Finish Schedule

NO.	NAME	BASE	FLOOR	WALL NORTH	WALL EAST	WALL SOUTH	WALL WEST	CEILING	CABINETRY	WINDOW COVERINGS	REMARKS
101	FIRST AID ROOM	–	F1	W1	W2	W1	W1	C1 / C2	CA1	B2	–
102	RECEPTION	–	F1	W1	W2	W1	W1	C1 / C2	CA2	-	–
103	LOCKER ROOM #1	B1	F1 / F2	W1	W1 / W4A	W4A	W1 / W4	C1 / C2	CA2 / CA3	B2	W3 @ SOFFITS
104	LOCKER ROOM #2	B1	F1 / F2	W4A	W1 / W4A	W1	W1 / W4	C1 / C2	CA2 / CA3	B2	W3 @ SOFFITS
105	RESCUE VEHICLES	–	F1	W1	W1	W1	W2 / W4	C1	-	-	–
106	UTILITY #1	–	F1	W2	-	W2	W4	C2	-	-	–
107	UTILITY #2	–	F1	W1	W1	W1	-	C1	-	-	–
108	EQUIP./JAN. RM.	–	F1	W1	W5	W5	W1	C1	-	-	–
109	ELECT. RM.	–	F1	W1	W1	W1	W1	C1	-	-	–
110	STAIR #1	–	F1 SIM.	W1 / W3	W1	W1	W1 / W2	C1 / C2	-	B2	–
111	NOT USED	–	-	-	-	-	-	-	-	-	–
112	RESTROOM	B1	F1	W2	W2	W2	W2	C2	-	-	–
113	STORAGE	–	F1	W2	W1	W2	W2	C1	-	-	–
114	BOARD & BUOY STORAGE	–	F1	W1	W1	W2A	W1 / W2A	C1	-	-	–
115	TELECOM. RM.	–	F1	W2	W1	W1	W1	C1	-	-	–
200	READY ROOM	–	F1	W1 / W3	W3	W1 / W3	W1 / W3	C1 / C2/ C3	CA1 / CA2 / CA3	B2	–
201	RESTROOM	B1	F2	W3 / W4	W3 / W4	W3 / W4	W3 / W4	C2	CA2	-	–
202	ADMIN.	–	F1	W1	W1 / W3	W1 / W3	W1	C4	CA2	B2	–
203	STORAGE	–	F4	W3	W3	W1	W1	C1	-	-	–
204	STAIR #2	–	F1 SIM.	W3	W3	W1	W1	C2	-	-	–
301	OBSERVATION LEVEL	–	F1 *	W1 / GLASS / W3A	W1 / W3 / W3A	W1 / GLASS / W3A	W1 / GLASS / W3A	C2A	CA2	B1 / B2	* RAISED FLOOR PARTIAL - 8/A5.7

Finish Legend

FINISH REFERENCE: FF FACTORY FINISH; P1 FLAT LATEX PAINT; P2 EGGSHELL LATEX PAINT; P3 SATIN LATEX PAINT; P4 SEMI GLOSS LATEX PAINT; P5 GLOSS LATEX PAINT; P6 STAIN; P7 EPOXY; S SEALED; ST STAINED; U UNFINISHED; FT FIRE TAPE ONLY

BASE	
B1	INTEGRAL COVE BASE - TILE
FLOORING	(SEE FLOORING PATTERN PLAN FOR ADDITIONAL INFORMATION)
F1	EXPOSED CONCRETE SLAB, SEALED AND SLIP RESISTANT
F2	TILE
WALL	
W1	EXPOSED CONCRETE - SEALED
W2	EXPOSED CMU - SEALED
W3	5/8" TYPE 'X' MOISTURE & MOLD RESISTANT GYPSUM BOARD, PAINTED. (P4 U.N.O.)
W3A	5/8" TYPE 'X' MOISTURE & MOLD RESISTANT GYPSUM BOARD @ OBSERVATION LEVEL, PAINTED. (P4 U.N.O.)
W4	TILE, THINSET OVER GYP. BD., CMU OR CEMENTITIUS BACKER BOARD
W4A	ACCENT TILE, THINSET OVER GYP. BD., CMU OR CEMENTITIUS BACKER BOARD
W5	60" HIGH FRP WAINSCOT PANEL OVER CONCRETE
CEILING	(SEE REFLECTED CEILING PLANS FOR ADDITIONAL INFORMATION)
C1	EXPOSED CONCRETE - SEALED
C2	5/8" TYPE 'X' MOISTURE AND MOLD RESISTANT GYPSUM BOARD, PAINTED (P4, U.N.O.) (SEE REFLECTED CEILING PLANS FOR HEIGHTS)
C2A	5/8" TYPE 'X' MOISTURE AND MOLD RESISTANT GYPSUM BOARD @ OBSERVATION LEVEL, PAINTED (P4, U.N.O.) (SEE REFLECTED CEILING PLANS FOR HEIGHTS)
C3	ACOUSTICAL PANEL
C4	SUSPENDED ACOUSTICAL CEILNG
CABINETRY	(SEE INTERIOR ELEVATIONS FOR ADDITIONAL INFORMATION)
CA1	14 GA STAINLESS STEEL COUNTER TOP/ PLASTIC LAMINATE FACE
CA2	SOLID SURFACE COUNTER TOP
CA3	SOLID SURFACE COUNTER TOP / PLASTIC LAMINATE FACE
WINDOW COVERS	
B1	RETRACTABLE SHADE FILM
B2	RETRACTABLE SHADES

Door Schedule

NO.	TYPE	DOOR WIDTH	DOOR HEIGHT	DOOR THICK	DOOR MATERIAL / FINISH	CORE	GLAZ'G	LOUVER WIDTH	LOUVER HEIGHT	FRAME MATERIAL	DETAILS HEAD	DETAILS JAMB	DETAILS SILL	HDWR	RATING	REMARKS
101A	C	3'-0"	7'-0"	1 3/4"	FRP / FACTORY	S	Y	-	-	FRP / FACTORY	6/A5.6	11/A5.3	9/A5.3	02	–	A, E, F, G, H, M
101B	C	3'-0"	7'-0"	1 3/4"	FRP / FACTORY	S	Y	-	-	FRP / FACTORY	12/A5.3	12/A5.3	–	11	–	E, H, M
102A	B	6'-0" (PR)	8'-0"	1 3/4"	FRP / FACTORY	S	Y	-	-	FRP / FACTORY	6/A5.6	11/A5.3	9/A5.3	01	–	A, B, D, E, F, G, H, M
102B	B	6'-0" (PR)	8'-0"	1 3/4"	FRP / FACTORY	S	Y	-	-	FRP / FACTORY	6/A5.6	11/A5.3	9/A5.3	01	–	A, B, D, E, F, G, H, M
102C	A	3'-0"	7'-0"	1 3/4"	FRP / FACTORY	S	Y	-	-	FRP / FACTORY	7/A5.3	9/A5.6	-	05	60 MIN	E, F, K, M
103A	A	3'-0"	7'-0"	1 3/4"	FRP / FACTORY	S	–	-	-	FRP / FACTORY	7/A5.3	7/A5.3	–	07	–	J, L, M
103B	A	3'-0"	7'-0"	1 3/4"	FRP / FACTORY	S	–	-	-	FRP / FACTORY	12/A5.3	12/A5.3	9/A5.3	14	90 MIN	K, M
104A	A	3'-0"	7'-0"	1 3/4"	FRP / FACTORY	S	–	-	-	FRP / FACTORY	7/A5.3	7/A5.3	–	07	–	J, L, M
104B	A	3'-0"	7'-0"	1 3/4"	FRP / FACTORY	S	–	-	-	FRP / FACTORY	12/A5.3	12/A5.3	9/A5.3	14	90 MIN	K, M
105A	E	22'-0"	10'-0"	1 3/4"	ALUM / FACTORY	S	Y	-	-	-	10/A5.4	11/A5.4	12/A5.4	18	–	H, 10'-0" CLEAR VERTICAL HEIGHT; MINIMUM
105B	E	22'-0"	10'-0"	1 3/4"	ALUM / FACTORY	S	Y	-	-	-	10/A5.4	11/A5.4	12/A5.4	18	–	H, 10'-0" CLEAR VERTICAL HEIGHT, MINIMUM
108A	D	8'-0" (PR)	7'-0"	1 3/4"	FRP / FACTORY	S	–	-	-	FRP / FACTORY	7/A5.3	7/A5.3	–	13	–	E, J, M
109A	D	6'-0" (PR)	7'-0"	1 3/4"	FRP / FACTORY	S	–	1'-0"	1'-0"	FRP / FACTORY	11/A5.3	11/A5.3	9/A5.3	06	–	E, COORDINATE W/ UTILITY COMPANY, PROVIDE METAL LOUVER AT BOTH DOORS
112A	A	3'-0"	7'-0"	1 3/4"	FRP / FACTORY	S	–	-	-	FRP / FACTORY	12/A5.3	12/A5.3	–	16	–	C, E, J, L, M (UNISEX RESTROOM)
113A	A	3'-0"	7'-0"	1 3/4"	FRP / FACTORY	S	–	-	-	FRP / FACTORY	12/A5.3	12/A5.3	–	11	–	E, M
114A	C	3'-0"	7'-0"	1 3/4"	FRP / FACTORY	S	Y	1'-4"	1'-4"	FRP / FACTORY	6/A5.6	11/A5.3	9/A5.3	03	–	A, B, E, F, G, H, M
114B	A	3'-0"	7'-0"	1 3/4"	FRP / FACTORY	S	Y	-	-	FRP / FACTORY	7/A5.6	7/A5.6	-	03	60 MIN	E, F, K1, M (180° SWING) - HOLD OPEN (1/A5.6)
114C	C	3'-0"	8'-0"	1 3/4"	FRP / FACTORY	S	Y	-	-	FRP / FACTORY	6/A5.6	11/A5.3	9/A5.3	04	-	B, E, F, G, H, K, M
115A	A	3'-0"	7'-0"	1 3/4"	FRP / FACTORY	S	–	-	-	FRP / FACTORY	7/A5.3	7/A5.3	–	17	–	E, J, L, M
200A	A	3'-0"	7'-0"	1 3/4"	FRP / FACTORY	S	–	-	-	FRP / FACTORY	2/A5.6	2/A5.6	-	09	60 MIN	E, K1, M - HOLD OPEN (1/A5.6)
200B	A	2'-0"	7'-0"	1 3/4"	FRP / FACTORY	S	–	-	-	FRP / FACTORY	2/A5.6	2/A5.6	–	10	–	A, E
201A	AA	3'-0"	7'-0"	1 3/4"	FRP / FACTORY	S	–	-	-	FRP / FACTORY	6/A5.7	7/A5.7	–	10	–	C, E, J, M (UNISEX RESTROOM)
202A	C	3'-0"	7'-0"	1 3/4"	FRP / FACTORY	S	Y	-	-	FRP / FACTORY	7/A5.3	7/A5.3	–	15	–	E, H, M (NO CLOSER)
203A	A	2'-0"	7'-0"	1 3/4"	FRP / FACTORY	S	–	-	-	FRP / FACTORY	2/A5.6	2/A5.6	–	12	–	E
301A	C	2'-6"	7'-0"	1 3/4"	FRP / FACTORY	S	Y	-	-	FRP / FACTORY	11/A5.3	11/A5.3	9/A5.3	05	–	A, E, F, H, M
301B	C	3'-0"	5'-6"	1 3/4"	FRP / FACTORY	S	Y	-	-	FRP / FACTORY	11/A5.3	11/A5.3	17/A5.3	11	–	A, E, H, M

Door Notes

Title 24 Notes

1. HAND ACTIVATED DOOR HARDWARE SHALL BE CENTERED BETWEEN 30" AND 44" ABOVE THE FLOOR. LATCHING AND LOCKING DOORS THAT ARE HAND ACTIVATED AND WHICH ARE A PART OF THE PATH OF TRAVEL, SHALL BE OPERABLE WITH A SINGLE EFFORT BY LEVER TYPE HARDWARE, PANIC BARS, PUSH–PULL ACTIVATING BARS, OR OTHER HARDWARE DESIGNED TO PROVIDE PASSAGE WITHOUT REQUIRING THE ABILITY TO GRASP THE OPENING HARDWARE. LOCKED DOORS SHALL OPERATE AS ABOVE IN EGRESS DIRECTION.
2. MAXIMUM EFFORT TO OPERATE DOORS SHALL NOT EXCEED 5.5 POUNDS FOR EXTERIOR DOORS AND 5 POUNDS FOR INTERIOR DOOR. PUSH PULL OR PUSH EFFORT BEING APPLIED AT RIGHT ANGLES TO HINGED DOORS AND AT THE CENTER PLAN OF SLIDING OR FOLDING DOORS. COMPENSATING DEVICES OR AUTOMATIC DOOR OPERATIONS MAY BE UTILIZED TO MEET THE ABOVE STANDARDS. WHEN FIRE DOORS ARE REQUIRED THE MAXIMUM EFFORT TO OPERATE THE DOOR MAY BE INCREASED NOT TO EXCEED 15 POUNDS.
3. THE LOWER 10" OF ALL DOORS (EXCEPT SLIDING AND AUTOMATIC) SHALL HAVE A SMOOTH UNINTERRUPTED SURFACE. WHERE NARROW FRAME DOORS ARE USED, A 10" HIGH SMOOTH PANEL SHALL BE INSTALLED ON THE PUSH SIDE OF THE DOOR, WHICH WILL ALLOW THE DOOR TO BE OPENED BY A WHEELCHAIR FOOTREST WITHOUT CREATING A TRAP OR HAZARDOUS CONDITION.
4. MAXIMUM HEIGHT OF THRESHOLD TO BE 1/2". CHANGE IN LEVEL BETWEEN 1/4 INCH AND 1/2 INCH SHALL BE BEVELED WITH A SLOPE NO GREATER THAN 1:2.
5. ALL EXTERIOR DOORS SHALL COMPLY WITH SECTION T-20-1495(D) OF THE ENERGY STANDARDS.
   A. DOOR HEADS, SILLS AND JAMBS MUST HAVE SEALS, ASTRAGALS OR BAFFLES.
   B. A MINIMUM ONE-INCH LAP OF JAMB IS REQUIRED.
   C. DOORS MOUNTED BETWEEN THE JAMBS MUST HAVE A CONTINUOUS SEAL OR BAFFLE AT EACH JAMB.
   D. DOUBLE DOORS MUST HAVE A WEATHER–TIGHT ASTRAGAL OR CLOSURE AT THEIR CENTER.
   E. EXTERIOR DOORS MUST BE FULLY WEATHER–STRIPPED
6. "ALL EXIT DOORS SHALL BE OPERABLE FROM THE INSIDE WITHOUT THE USE OF A KEY OR ANY SPECIAL KNOWLEDGE OR EFFORT. NO DEAD BOLTS, NO SLIDING BOLTS, ETC." (U.B.C. SEC. 1004.3 AND U.F.C. SEC. 1 2.1 04(B)), UNLESS OTHERWISE NOTED ON THE PLANS.
7. DOORS SHALL MEET THE MINIMUM INFILTRATION REQUIREMENTS PER SECTION 2.5317 B.E.E.S AND CALIFORNIA BUILDING CODE TITLE 24-6-2-116.
8. ALL EXTERIOR DOORS SHALL BE SET IN SEALANT, WEATHER-STRIPPED AND LABELED AS COMPLYING WITH ANSI STANDARDS.

Notes

1. FINISH APPLIED TO DOORS SHALL OCCUR AT ALL SIX SURFACE EDGES.
2. STAINED DOORS TO HAVE STAINED JAMBS AND TRIM, UNLESS OTHERWISE NOTED.
3. STAIN GRADE DOOR TO BE 7 PLY. PAINT GRADE DOOR TO BE 5 PLY.
4. PAINTED WOOD DOORS TO HAVE PAINTED JAMBS AND TRIM, UNLESS OTHERWISE NOTED.
5. ALL FIRE RATED (F.R.) DOORS, DOOR FRAMES AND HARDWARE SHALL HAVE U.L. LABEL AND BE SELF OR AUTO CLOSING WITH APPROVED SIGNS PER L.S.C. 5-2.1.8.
6. GLASS IN DOORS TO BE TEMPERED AND LABELED PER CODE, UNLESS OTHERWISE NOTED.
7. IN B OCCUPANCIES: UNLESS DEADBOLT IS OPERABLE FROM THE INSIDE BY TURNING THE DOOR KNOB, THE DEADBOLT MUST BE AN INDICATING TYPE AND ON OR NEAR THE DOOR IN LETTERS 1" HIGH A SIGN STATING: "THIS DOOR TO REMAIN UNLOCKED DURING BUSINESS HOURS"
8. ALL FINISH HARDWARE TO BE INCLUDED IN AN ALLOWANCE ESTABLISHED BY THE GENERAL CONTRACTOR, UNLESS OTHERWISE NOTED (SEE SPECIFICATIONS SECTION 01020 AND/OR 08710).

Remarks

A. NON–FIRE RATED DOOR, SELF CLOSING WITH OVERHEAD STOP AND HOLDER
B. EXIT DOOR – SEE TITLE 24 NOTES, THIS PAGE
C. PROVIDE UNISEX REST ROOM SIGN 9/A5.0
D. PROVIDE SIGN "THIS DOOR TO REMAIN UNLOCKED DURING BUSINESS HOURS" PER UBC.
E. PROVIDE LOCK SET
F. ELECTRIC STRIKE / CONTROLS – SEE ELECTRICAL PLANS
G. DOOR TO HAVE ISA SIGN PER DETAIL 7/A5.0
H. DOOR TO HAVE INSTITUTIONAL LAMINATED GLASS
J. UNDERCUT DOOR, PER MECHANICAL
K. DOORS AND ASSEMBLIES TO BE FIRE RATED AND SELF CLOSING PER UBC SECTIONS 1005.3.3.5, 1005.3.4.4, 1005.3.5.3, 711.4 AND 713.2.
K1. DOORS AND ASSEMBLIES TO BE FIRE RATED AND SELF CLOSING, WITH AUTOMATIC HOLD-OPEN DECVICE CONNECETED TO FIRE ALARM SYSTEM. (SECTIONS 1005.3.3.5, 1005.3.4.4, 1005.3.5.3, 711.4 AND 713.2.)
L. NON–FIRE RATED DOOR WITH SELF CLOSER
M. PROVIDE STAINLESS STEEL KICK PLATE ON PUSH SIDE OF DOOR

A-27

Dominy + Associates Architects @ domusstudio
2150 West Washington, Suite 303
San Diego, California 92110
Tel 619.692.9393
Fax 619.692.9394
domusstudio.com

SPEC. NO. 8147

LICENSED ARCHITECT WAYNE HOLTAN No. C12113 REN 9.30.15 STATE OF CALIFORNIA

PLANS FOR THE CONSTRUCTION OF
South Mission Beach Lifeguard Station

Door Schedule + Finish Schedule | A6.0

CITY OF SAN DIEGO, CALIFORNIA
ENGINEERING & CAPITAL PROJECTS
ARCHITECTURAL ENGINEERING & CONTRACTS DIVISION
SHEET 45 OF 94 SHEETS

WBS S-00791

APPROVED: [signature] FOR CITY ENGINEER — DATE 10/13/2014

SUBMITTED BY: JIHAD SLEIMAN, PROJECT MANAGER

DESCRIPTION	BY	APPROVED	DATE	FILMED
ORIGINAL	YH/TT			

YOUSIF BENYAMIN — PROJECT ENGINEER
218-1693 — CCS27 COORDINATES
1858-6253 — CCS83 COORDINATES

CONTRACTOR ______ DATE STARTED ______
INSPECTOR ______ DATE COMPLETED ______

32849-45-D

Proprietary design. These drawings and design are protected by common law copyright. All patentable material contained herein and originating with Dominy + Associates Architects @ domusstudio LLP shall be the property of Dominy + Associates Architects @ domusstudio LLP
© COPYRIGHT October 13, 2014 at 8:00AM

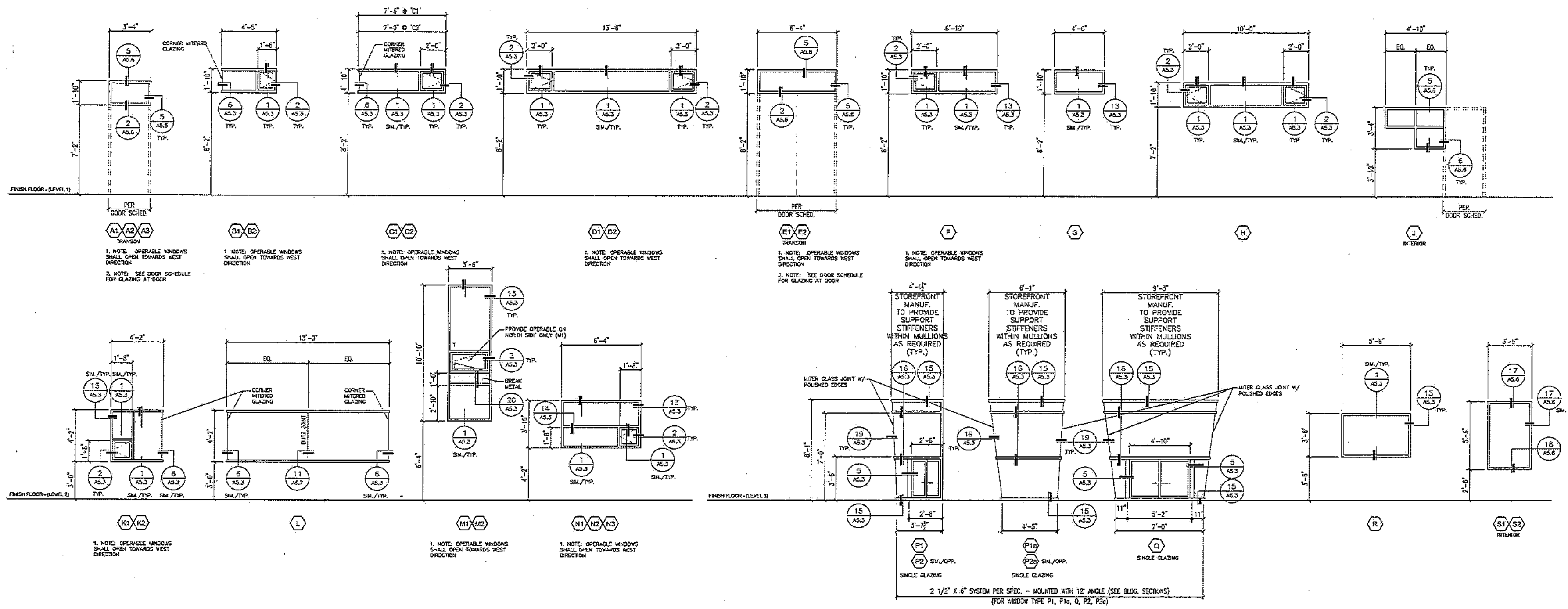

WINDOW SCHEDULE

NO.	DESCRIPTION	SIZE WIDTH	SIZE HEIGHT	FRAME MATERIAL / FINISH	DETAILS HEAD / JAMB / SILL	GLASS TYPE	ROLLER SHADE 1 (FABRIC)	ROLLER SHADE 2 (FILM)	REMARKS
A1	FIXED	3'-4"	1'-10"	ALUMINUM / FACTORY	SEE ELEVATIONS ABV.	1	X	-	-
A2	FIXED	3'-4"	1'-10"	ALUMINUM / FACTORY	SEE ELEVATIONS ABV.	1	X	-	-
A3	FIXED	3'-4"	1'-10"	ALUMINUM / FACTORY	SEE ELEVATIONS ABV.	1	X	-	-
B1	FIXED / CASEMENT	4'-5"	1'-10"	ALUMINUM / FACTORY	SEE ELEVATIONS ABV.	1	X	-	-
B2	FIXED / CASEMENT	4'-5"	1'-10"	ALUMINUM / FACTORY	SEE ELEVATIONS ABV.	1	X	-	-
C1	FIXED / CASEMENT	7'-6"	1'-10"	ALUMINUM / FACTORY	SEE ELEVATIONS ABV.	1	X	-	-
C2	FIXED / CASEMENT	7'-0"	1'-10"	ALUMINUM / FACTORY	SEE ELEVATIONS ABV.	1	X	-	-
D1	FIXED / CASEMENT	13'-6"	1'-10"	ALUMINUM / FACTORY	SEE ELEVATIONS ABV.	1	X	-	-
D2	FIXED / CASEMENT	13'-6"	1'-10"	ALUMINUM / FACTORY	SEE ELEVATIONS ABV.	1	X	-	-
E1	FIXED	6'-4"	1'-10"	ALUMINUM / FACTORY	SEE ELEVATIONS ABV.	1	X	-	-
E2	FIXED	6'-4"	1'-10"	ALUMINUM / FACTORY	SEE ELEVATIONS ABV.	1	X	-	-
F	FIXED / CASEMENT	6'-10"	1'-10"	ALUMINUM / FACTORY	SEE ELEVATIONS ABV.	1	X	-	-
G	FIXED	4'-0"	1'-10"	ALUMINUM / FACTORY	SEE ELEVATIONS ABV.	1	X	-	-
H	FIXED / CASEMENT	10'-10"	1'-10"	ALUMINUM / FACTORY	SEE ELEVATIONS ABV.	1	X	-	-
J	FIXED (INTERIOR)	4'-10"	3'-4"	HOLLOW MTL / PAINT	SEE ELEVATIONS ABV.	3	-	-	60 MIN.
K1	FIXED / CASEMENT	4'-2"	4'-2"	ALUMINUM / FACTORY	SEE ELEVATIONS ABV.	1	X	-	-
K2	FIXED / CASEMENT	4'-2"	4'-2"	ALUMINUM / FACTORY	SEE ELEVATIONS ABV.	1	X	-	-
L	FIXED	13'-0"	4'-0"	ALUMINUM / FACTORY	SEE ELEVATIONS ABV.	1	X	-	-
M1	FIXED	3'-6"	10'-0"	ALUMINUM / FACTORY	SEE ELEVATIONS ABV.	1	X	-	(2) ROLLER SHADES AT THIS WINDOW
M2	FIXED	3'-6"	10'-0"	ALUMINUM / FACTORY	SEE ELEVATIONS ABV.	1	X	-	(2) ROLLER SHADES AT THIS WINDOW
N1	FIXED / CASEMENT	6'-4"	3'-10"	ALUMINUM / FACTORY	SEE ELEVATIONS ABV.	1	X	-	-
N2	FIXED / CASEMENT	6'-4"	3'-10"	ALUMINUM / FACTORY	SEE ELEVATIONS ABV.	1	X	-	-
N3	FIXED / CASEMENT	6'-4"	3'-10"	ALUMINUM / FACTORY	SEE ELEVATIONS ABV.	1	X	-	-
P1	FIXED / SLIDER	VARIES	8'-1"	ALUMINUM / FACTORY	SEE ELEVATIONS ABV.	2	-	X	SINGLE GLAZING
P1a	FIXED	VARIES	8'-1"	ALUMINUM / FACTORY	SEE ELEVATIONS ABV.	2	-	X	SINGLE GLAZING
P2	FIXED / SLIDER	VARIES	8'-1"	ALUMINUM / FACTORY	SEE ELEVATIONS ABV.	2	-	X	SINGLE GLAZING
P2a	FIXED	VARIES	8'-1"	ALUMINUM / FACTORY	SEE ELEVATIONS ABV.	2	-	X	SINGLE GLAZING
Q	FIXED / SLIDER	VARIES	8'-1"	ALUMINUM / FACTORY	SEE ELEVATIONS ABV.	2	-	X	SINGLE GLAZING
R	FIXED	5'-6"	3'-6"	ALUMINUM / FACTORY	SEE ELEVATIONS ABV.	1	X	-	-
S1	FIXED (INTERIOR)	3'-6"	5'-6"	ALUMINUM / FACTORY	SEE ELEVATIONS ABV.	1	-	-	-
S2	FIXED (INTERIOR)	3'-6"	5'-6"	ALUMINUM / FACTORY	SEE ELEVATIONS ABV.	1	-	-	

1. NOTE: SEE DOOR SCHEDULE FOR GLAZING AT DOOR

NOTE: GLASS TYPES TO BE PER SCHEDULE. DETAILS ARE SIMILAR FOR BOTH DUAL & SINGLE GLAZE CONDITIONS.

Window Notes

1. CONTRACTOR SHALL VERIFY ALL WINDOW DIMENSIONS WITH SITE CONDITIONS PRIOR TO ORDERING.
2. ALL WINDOWS SHALL BE DUAL GLAZED, U.O.N.
3. WINDOWS SHALL MEET THE MINIMUM INFILTRATION REQUIREMENTS PER SECTION 2.5317 B.E.E.S. AND CALIFORNIA BUILDING CODE TITLE 24-6-2-116.
4. TEMPERED AND SAFETY GLAZING IS CALLED OUT IN DRAWINGS WITH SYMBOLS FOR CONTRACTORS CONVENIENCE AND SHALL NOT RELIEVE THE CONTRACTOR'S RESPONSIBILITY TO PROVIDE THIS GLASS IN ALL LOCATIONS REQUIRED BY CODE. ALL SAFETY GLAZING TEMPERED OR OTHERWISE SHALL BE LABELED PER CODE.
5. CONTRACTOR SHALL VERIFY ROUGH OPENING REQUIREMENTS WITH WINDOW MANUFACTURER BEFORE ROUGH FRAMING IS INSTALLED.
6. CONTRACTOR SHALL UTILIZE WINDOW PRODUCTS WITH FULL U-VALUE LABELING BY THE WINDOW MANUFACTURERS CHOICE OF DEFAULT OR NFRC-U METHOD.
7. ALL EXTERIOR WINDOWS AND SKYLIGHTS SHALL BE SET IN SEALANT, WEATHER-STRIPPED AND LABELED AS COMPLYING WITH ANSI STANDARDS.
8. SEE TITLE 24 ENERGY NOTES FOR MORE INFO.
9. EXTERIOR STRUCTURAL MEMBERS BETWEEN STOREFRONT FRAMES TO BE COVERED WITH BREAKMETAL PAINTED TO MATCH WINDOW SYSTEM, U.O.N.
10. ALL BREAK METAL AND ALUMINUM ANGLES/CHANNELS THAT ARE CONNECTED TO OR PART OF THE WINDOW OR SUN SHADE SYSTEM SHALL BE KYNAR COATED TO MATCH THE WINDOW SYSTEM.

SYMBOLS

ALUM = ALUMINUM
STL = STEEL
WD = WOOD
PTD = PAINTED
T = TEMPERED GLAZING
SPG = SAFETY GLAZING

GLASS TYPES (PER SPECS)

1. 1" DUAL GLAZE, OUTSIDE LITE: 1/4", FACE #1 CLEAR, FACE #2 GUARDIAN SUNGUARD SN54 AND INSIDE LITE: 1/4", FACE #3 & #4 CLEAR; AS MANUFACTURED BY GUARDIAN INDUSTRIES CORP. MAXIMUM U-FACTOR: 0.37; MAXIMUM SHGC: 0.29.
2. 9/16" LAMINATED PILKINGTON OPTIVIEW: 1/4" OPTI-GRAY23 ANNEALED / .060 SGP INTERLAYER / 1/4" CLEAR ANNEALED WITH OPTIVIEW COATING #4 SURFACE - MAXIMUM U-FACTOR: 0.65; MAXIMUM SHGC: 0.72. - (NO SUBSTITUTIONS)
3. PILKINGTON PYROSTOP 60 MIN INTERIOR INSTALLATION AS MANUFACTURED BY PILKINGTON ARCHITECTURAL GLASS.
4. GLAZING AT DOORS

A-28

Dominy + Associates Architects @ domusstudio
2150 West Washington, Suite 303
San Diego, California 92110
Tel 619.692.9393
Fax 619.692.9394
domusstudio.com

SPEC. NO 8147

LICENSED ARCHITECT WAYNE HOLTAN No. C21113 REN 9.30.15 STATE OF CALIFORNIA

PLANS FOR THE CONSTRUCTION OF
South Mission Beach Lifeguard Station

Window Schedule A6:1

CITY OF SAN DIEGO, CALIFORNIA
ENGINEERING & CAPITAL PROJECTS
ARCHITECTURAL ENGINEERING & CONTRACTS DIVISION
SHEET 46 OF 94 SHEETS

WBS S-00791

APPROVED: FOR CITY ENGINEER — DATE 10/13/2014

SUBMITTED BY: JIHAD SLEIMAN, PROJECT MANAGER

DESCRIPTION	BY	APPROVED	DATE	FILMED
ORIGINAL	WH/TT			

YOUSIF BENYAMIN, PROJECT ENGINEER
218-1693 CCS27 COORDINATES
1858-6253 CCS83 COORDINATES

CONTRACTOR ______ DATE STARTED ______
INSPECTOR ______ DATE COMPLETED ______

32849-46-D

SYMBOL	WALL ASSEMBLY	FIRE RATING	SOUND RATING	TEST ASSEMBLY	DESCRIPTION
W1 W1A W/ 2X6 FURRING	**CONCRETE WALL** 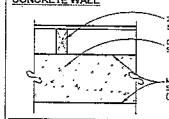	4 HR.	N/A	CBC TABLE 7-B ITEM 7-1.1	---
W2 W2A W/ 2X6 FURRING	**CMU WALL** 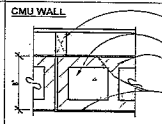	2 HR.	N/A	CBC TABLE 7-B ITEM 6-1.2	4.2" MIN. THICKNESS CALCAREOUS OR SILICEOUS GRAVEL.
W4A 2x4 STUDS	**INT. WALL - NON RATED** 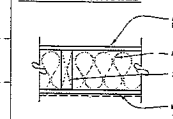	N/R	N/A	N/A	---
W4B 2x6 STUDS					
W4C 2x4 DBL. STUD WALL					
W5A WITH 2x4 STUDS	**1 HR. RATED WOOD FRAMED INTERIOR WALL (U.N.O.)** 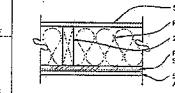	1 HR.	N/A	GA FILE NO. WP 3230	ONE LAYER 5/8" TYPE X GYPSUM WALLBOARD OR VENEER BASE APPLIED WITH 1" TYPE S DRYWALL SCREWS AT EDGES 6" O.C. AND CENTER ROW 12" O.C. GYPSUM WALLBOARD FILLER STRIP ATTACHED TO PLATE AT FLOOR LINE WITH 6d NAILS 1-7/8" LONG, .086" SHANK, 1/4" HEADS 16" O.C. 1-1/2" GLASS FIBER .8 PCF ATTACHED TO STUDS IN STUD SPACE WITH 1/2" LONG STAPLES. ON OPPOSITE SIDE ONE LAYER 5/8" TYPE X GYPSUM WALLBOARD OR VENEER BASE APPLIED AT RIGHT ANGLES TO STUDS WITH 6d NAILS AS DESCRIBED ABOVE 8" O.C. STAGGER END JOINTS 48" O.C. EACH SIDE. SOUND TESTED WITH 3- 1/2" CLASS FIBER INSULATION, (LOAD BEARING)
W6B WITH 3x6 STUDS					

SYMBOL	CEILING ASSEMBLY	FIRE RATING	SOUND RATING	TEST ASSEMBLY	DESCRIPTION
C-1	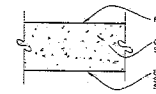	---	---	---	CEILING JOISTS SHALL BE PER STRUCTURAL OR COUNTY STANDARD MIN.
C-2	**DROPPED GYPSUM BOARD CEILING** 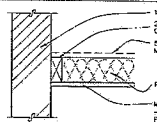	---	---	---	CEILING JOISTS SHALL BE PER STRUCTURAL OR COUNTY STANDARD MIN.
C-3	**DROPPED GYPSUM BOARD CEILING** 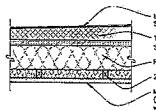	---	---	---	CEILING JOISTS SHALL BE PER STRUCTURAL OR COUNTY STANDARD MIN.
C-4	**SUSPENDED ACOUSTICAL CEILING** 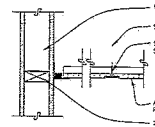	---	---	---	SEE SHEET A5.4 FOR CEILING SUPPORT AND RESTRAINT

SYMBOL	ROOF ASSEMBLY	FIRE RATING	SOUND RATING	TEST ASSEMBLY	DESCRIPTION
R1	**MEMBRANE ROOF** 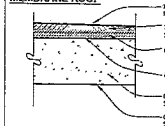	4 HR.	N/A	CBC TABLE 7-C ITEM	CLASS A RATED ROOFING
R1A @ GARAGE	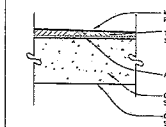	4 HR.	N/A	CBC TABLE 7-C ITEM	CLASS A RATED ROOFING
R2	**MEMBRANE ROOF** 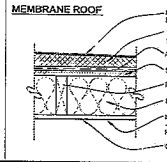	N/R	N/A	N/A	CLASS A RATED ROOFING

SYMBOL	FLOOR ASSEMBLY	FIRE RATING	SOUND RATING	TEST ASSEMBLY	DESCRIPTION
F1	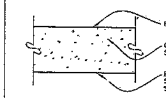	---	---	---	---

BUILDING ENVELOPE INSULATION

ROOF INSULATION:

FIRST LEVEL: (ABOVE LOCKER ROOMS)
(5-LAYERS (2.5") OF HIGH PERFORMANCE BUILDING INSULATION BLANKET (R24) + 1/2" TAPERED RIGID INSULATION (R6) = R30 TOTAL - (SEE 8/A5.1, TYP.)

SECOND LEVEL: (UNDER MECHANICAL)
(5-LAYERS (2.5") OF HIGH PERFORMANCE BUILDING INSULATION BLANKET (R24) + 1/2" TAPERED RIGID INSULATION (R6) = R30 TOTAL - (SEE 8/A5.1, TYP.)

OBSERVATION LEVEL: (UPPER ROOF)
8" BATT (R25) + 1/2" TAPERED RIGID INSULATION (R6) = R31 TOTAL

WALL INSULATION: 3 5/8" BATT INSULATION (R13)

ASSEMBLY NOTES

1. INTERIOR WALLS ARE FULL HEIGHT TO UNDERSIDE OF CONCRETE OR PLYWOOD ROOF DECK ABOVE, U.N.O. - SEE 1/A5.4 TYP.
2. INTERIOR FRAMED WALLS SHALL HAVE R13 MIN. BATT INSULATION FOR SOUND ATTENUATION, U.N.O.
3. WOOD STRUCTURAL PANELS MAY BE INSTALLED BETWEEN THE FIRE PROTECTION & THE WOOD STUDS ON EITHER THE INTERIOR OR EXTERIOR SIDE OF THE WOOD FRAME ASSEMBLY IN TABLE 7-B, PROVIDED THE LENGTH OF THE FASTENERS USED TO ATTACH THE FIRE PROTECTION ARE INCREASED BY AN AMOUNT AT LEAST EQUAL TO THE THICKNESS OF THE WOOD STRUCTURAL PANEL.
4. SEE FINISH SCHEDULE FOR MOISTURE RESISTANT GYPSUM BOARD LOCATIONS, IN LIEU OF REGULAR NON-RESISTANT GYPSUM BOARD.
5. FINISH MATERIAL SHALL BE APPLIED DIRECTLY AGAINST FIRE-RESISTIVE OR NON-COMBUSTIBLE CONSTRUCTION, OR TO FURRING STRIPS NOT EXCEEDING 1 3/4" INCHES. FURRED SPACE SHALL BE FILLED WITH INORGANIC / CLASS 1 MATERIAL, OR FIRE STOPPED, NOT TO EXCEED 8 FEET IN ANY DIRECTION. (SECTION 803, ITEM 1)

A-29

Deisley+Associates Architects & Consultants
2150 West Washington, Suite 203
San Diego, California 92110
Tel 619.692.9393
Fax 619.692.9394
deisleyaia.com

SPEC. NO B147

LICENSED ARCHITECT RENEWAL POCKET No. C11111 REN 9.30.15 STATE OF CALIFORNIA

PLANS FOR THE CONSTRUCTION OF
South Mission Beach Lifeguard Station

Wall Assemblies — A6.2

CITY OF SAN DIEGO, CALIFORNIA
ENGINEERING & CAPITAL PROJECTS
ARCHITECTURAL ENGINEERING & CONTRACTS DIVISION
SHEET 47 OF 94 SHEETS

WBS S-00791

APPROVED 10/13/2014
FOR CITY ENGINEER DATE

SUBMITTED BY: JOHN SLOMAN, PROJECT MANAGER

DESCRIPTION	BY	APPROVED	DATE	FILMED
ORIGINAL	MW/JT			

YOUSIF BENYAMIN, PROJECT ENGINEER
218-1693
DS527 COORDINATES
1806-6253
CCSD COORDINATES

CONTRACTOR _____ DATE STARTED _____
INSPECTOR _____ DATE COMPLETED _____

32849-47-D

Preparedby design: Plans drawings and design are protected by common law copyright. All potentials hall not be construed from standard drawings by Deisley + Associates Architects & Consultants LLP.
©COPYRIGHT: October 13, 2014 at 8:16AM

Proprietary design. These drawings and design are protected by common law copyright. All patentable material contained herein and adjoining with Domdry + Associates Architects @ domusstudio LLP shall be the property of Domdry + Associates Architects @ domusstudio LLP
© COPYRIGHT October 09, 2014 at 10:21AM

GENERAL

1. THE CONTRACTOR SHALL VERIFY ALL DIMENSIONS, ELEVATIONS AND CONDITIONS AT THE JOB SITE BEFORE STARTING WORK, AND SHALL NOTIFY THE ARCHITECT IMMEDIATELY OF ANY DISCREPANCIES.

2. NOTES AND DETAILS ON THE DRAWINGS SHALL TAKE PRECEDENCE OVER THESE STANDARD NOTES AND TYPICAL DETAILS IN CASE OF CONFLICT.

3. DIMENSIONS SHALL TAKE PRECEDENCE OVER SCALED DRAWINGS.

4. ALL MATERIALS AND WORKMANSHIP SHALL BE PERFORMED IN ACCORDANCE WITH LOCAL STANDARDS AND THE APPLICABLE PROVISIONS OF THE 2010 CALIFORNIA BUILDING CODE (CBC) AS AMENDED BY THE CITY OF SAN DIEGO.

5. WHERE NO CONSTRUCTION DETAILS ARE SHOWN OR NOTED FOR ANY PART OF THE WORK, SUCH DETAILS SHALL BE THE SAME AS FOR SIMILAR WORK SHOWN ON THE DRAWINGS.

6. THE CONTRACT STRUCTURAL DRAWINGS AND SPECIFICATIONS REPRESENT THE FINISHED STRUCTURE. UNLESS OTHERWISE INDICATED. THEY DO NOT INDICATE THE METHOD OF CONSTRUCTION. THE CONTRACTOR SHALL PROVIDE ALL MEASURES NECESSARY TO PROTECT THE STRUCTURE, WORKMEN, AND OTHER PERSONS DURING CONSTRUCTION. SUCH MEASURES SHALL INCLUDE, BUT NOT BE LIMITED TO, BRACING, SHORING FOR CONSTRUCTION EQUIPMENT, SHORING FOR THE BUILDING, SHORING FOR EARTH BANKS, FORMS, SCAFFOLDING, PLANKING, SAFETY NETS, SUPPORT AND BRACING FOR CRANES AND GIN POLES, ETC. THE CONTRACTOR SHALL SUPERVISE AND DIRECT THE WORK AND HE OR SHE SHALL BE SOLELY RESPONSIBLE FOR ALL CONSTRUCTION MEANS, METHODS, TECHNIQUES, SEQUENCES AND PROCEDURES. OBSERVATION VISITS TO THE SITE BY THE ENGINEER SHALL NOT CONSTITUTE INSPECTION OF THE ABOVE ITEMS.

7. THE PROJECT SPECIFICATIONS FORM A PART OF THESE GENERAL NOTES.

8. ALL WORK SHALL CONFORM TO THE MINIMUM STANDARDS OF THE FOLLOWING CODES:

   THE 2010 EDITION OF THE CALIFORNIA BUILDING CODE, AND OTHER REGULATING AGENCIES WHICH HAVE AUTHORITY OVER ANY PORTION OF THE WORK, AND THOSE CODES AND STANDARDS LISTED IN THESE NOTES AND THE PROJECT SPECIFICATIONS.

9. SEE THE ARCHITECTURAL DRAWINGS FOR THE FOLLOWING:

   SIZE AND LOCATION OF DOOR AND WINDOW OPENINGS.
   SIZES AND LOCATION OF INTERIOR AND EXTERIOR NON-BEARING PARTITIONS.
   SIZES AND LOCATIONS OF CONCRETE CURBS, FLOOR DRAINS, SLOPES, DEPRESSED AREAS, CHANGES IN LEVEL, CHAMFERS, GROOVES, INSERTS, ETC.
   SIZE AND LOCATION OF FLOOR AND ROOF OPENINGS.
   FLOOR AND ROOF FINISHES.
   STAIR FRAMING AND DETAILS.
   DIMENSIONS NOT SHOWN ON THE STRUCTURAL DRAWINGS.
   CEILING ASSEMBLIES.
   EXTERIOR WALL ASSEMBLIES.

10. SEE MECHANICAL, PLUMBING, AND ELECTRICAL DRAWINGS FOR THE FOLLOWING:

    PIPE SLEEVES, HANGERS, TRENCHES, WALL FLOOR AND ROOF OPENINGS, DUCT PENETRATION ETC., EXCEPT AS SHOWN OR NOTED.
    ELECTRICAL CONDUIT RUNS, BOXES, OUTLETS IN WALLS AND SLABS.
    CONCRETE INSERTS FOR ELECTRICAL, MECHANICAL OR PLUMBING FIXTURES.
    SIZE AND LOCATION OF MACHINE OR EQUIPMENT BASES, ANCHORS BOLTS FOR MOUNTS.

11. NOTIFY THE STRUCTURAL ENGINEER WHEN DRAWINGS BY OTHERS SHOW OPENINGS, POCKETS, ETC, NOT SHOWN ON THE STRUCTURAL DRAWINGS, BUT WHICH ARE LOCATED IN THE STRUCTURAL MEMBERS.

12. CONTRACTOR SHALL INVESTIGATE THE SITE DURING CLEARING AND EARTH WORK OPERATIONS FOR FILLED EXCAVATIONS OR BURIED STRUCTURES SUCH AS CESSPOOLS, CISTERNS, FOUNDATIONS, UTILITIES, ETC. IF ANY SUCH STRUCTURES ARE FOUND, THE STRUCTURAL ENGINEER SHALL BE NOTIFIED IMMEDIATELY.

13. CONSTRUCTION MATERIALS SHALL BE SPREAD OUT WHEN PLACED ON FRAMED FLOORS OR ROOFS. THE CONSTRUCTION MATERIAL LOAD SHALL NOT EXCEED THE DESIGN LIVE LOAD PER SQUARE FOOT. PROVIDE ADEQUATE SHORING AND/OR BRACING WHERE STRUCTURE HAS NOT ATTAINED DESIGN STRENGTH.

14. SHOP DRAWINGS SUBMITTED TO THE STRUCTURAL ENGINEER FOR REVIEW SHALL CONSIST OF 2 BLUELINE SETS MINIMUM.

DESIGN CRITERIA

1. LIVE LOADS:

   ROOF 20 P.S.F.
   FLOOR 50 P.S.F.
   STAIRS 100 P.S.F.

DESIGN CRITERIA (CONTINUED)

2. WIND DESIGN DATA: ASCE 7-05 CHAP 6

   BASIC WIND SPEED 85 M.P.H.
   3 SECOND GUST 85 M.P.H.
   WIND IMPORTANCE FACTOR 1.0
   OCCUPANCY CATEGORY II
   WIND EXPOSURE D

3. EARTHQUAKE DESIGN DATA:

SEISMIC PARAMETER	RECOMMENDED VALUE	ASCE 7-05
SEISMIC IMPORTANCE FACTOR	I = 1.0	SEC 11.5.1
S_S	1.476	SEC 11.4.1
S_1	0.566	SEC 11.4.1
SITE CLASS	S_D	
S_{DS}	0.984	
S_{D1}	0.566	
SEISMIC DESIGN CATEGORY	D	SEC 11.6.1.1
BASIC SEISMIC-FORCE-RESISTING SYSTEM(S)	A.1/A.7	TABLE 12.2-1
DESIGN BASE SHEAR	$V = C_S W$	
Cs	0.248	
R	5.0	
RHO	1.30	
ANALYSIS PROCEDURE USED	EQUIV LAT FORCE	

SOILS CONDITION

1. THE CHARACTER OF SOIL AT THIS SITE IS CONTAINED IN THE GEOTECHNICAL (SOILS) REPORT PREPARED BY TERRA COSTA CONSULTING GROUP, INC. PROJECT NO. 2231 DATED NOVEMBER 8, 2007 AND UPDATED FOR CBC 2010 SEISMIC REQUIREMENTS DATED DECEMBER 1, 2011. CONTRACTOR SHALL READ AND BECOME FAMILIAR WITH ITS REQUIREMENTS.

2. THE DESIGN IS BASED UPON:

   A. THE ALLOWABLE SOIL BEARING PRESSURE IS 2000 P.S.F. FOR DEAD PLUS LIVE LOADS. ALL SOIL PRESSURE VALUES MAY BE INCREASED BY 1/3 WHEN CONSIDERING TRANSIENT LOADS DUE TO WIND OR SEISMIC FORCES. THE ALLOWABLE SUBGRADE MODULUS IS 75 P.C.I.

   B. SOIL PASSIVE PRESSURE SHALL BE LIMITED TO AN EQUIVALENT FLUID PRESSURE OF 300 P.C.F.

   C. A SLIDING COEFFICIENT OF 0.45.

   D. BULKHEAD WALL DESIGN LOADS AS FOLLOWS:

3. EQUIVALENT FLUID PRESSURE OF 80 P.C.F. ASSUMING SATURATED BACKFILL.

4. MAXIMUM COMBINED HYDROSTATIC AND HYDRODYNAMIC WAVE FORCES OF 22,560 P.L.F.

5. PULSATING WAVE LOADS OF 8,500 P.L.F.

6. SUBGRADE PREPARATION UNDER THE BUILDING SHALL BE COMPACTED BY A COMBINATION OF FLOODING AND VIBRATION TO A MINIMUM RELATIVE COMPACTION OF 90% AS DETERMINED BY ASTM D-1557. THE TOP 2 FEET SHALL BE OVEREXCAVATED AND RECOMPACTED TO A MINIMUM 90% AND THIS RECOMPACTION SHOULD EXTEND A MINIMUM OF 5 FEET OUTSIDE OF THE BUILDING LIMITS.

7. FOOTING ELEVATIONS SHOWN ARE FOR BIDDING PURPOSES ONLY AND ARE ASSUMED TO BE IN SUITABLE BEARING MATERIALS. THE ACTUAL ADEQUACY OF THE BEARING MATERIAL SHALL BE DETERMINED BY A REPRESENTATIVE OF THE GEOTECHNICAL ENGINEER PRIOR TO PLACING OF REINFORCING OR POURING OF CONCRETE, AND FOOTING ELEVATIONS SHALL BE ADJUSTED, OR OTHER REMEDIAL ACTION TAKEN, AS DIRECTED BY THIS REPRESENTATIVE AND APPROVED BY THE ARCHITECT AND THE ENGINEER.

8. IF THE BUILDING INSPECTOR SUSPECTS EXPANSIVE SOILS BASED ON OBSERVATION OF THE FOUNDATION EXCAVATION, HE MAY REQUIRE SOIL EXPANSION INDEX TESTS IN ACCORDANCE WITH CBC STD 18-2 OR CHAP 6, DIV 7, TITLE 8 OF THE SAN DIEGO COUNTY CODE.

FOUNDATION

1. CONTRACTOR SHALL PROVIDE FOR PROPER DEWATERING OF EXCAVATIONS FROM SURFACE WATER, GROUND WATER, SEEPAGE, ETC.

2. CONTRACTOR SHALL PROVIDE FOR THE DESIGN AND INSTALLATION OF ALL CRIBBING, SHEATHING AND SHORING REQUIRED TO SAFELY AND ADEQUATELY RETAIN THE EARTH BANKS AND ANY EXISTING STRUCTURE.

3. FOOTING BACKFILL AND UTILITY TRENCH BACKFILL WITHIN THE BUILDING PERIMETER SHALL BE MECHANICALLY COMPACTED IN LAYERS, TO THE APPROVAL OF THE GEOTECHNICAL ENGINEER.

CONCRETE

1. ALL CONCRETE SHALL BE NORMAL WEIGHT, 150 P.C.F., U.O.N. USE 1-INCH NOMINAL AGGREGATE WITH WATER/CEMENT RATIO NOT TO EXCEED 0.45.

2. ALL CONCRETE SHALL HAVE A 28-DAY COMPRESSIVE STRENGTH OF 4,200 P.S.I. MINIMUM AND MINIMUM CEMENT CONTENT OF 520 POUNDS PER CUBIC YARD.

3. CONCRETE PROTECTION FOR REINFORCEMENT. THE FOLLOWING MINIMUM CONCRETE COVER SHALL BE PROVIDED FOR REINFORCEMENT:

   MIN COVER (INCHES)

   A. CONCRETE CAST AGAINST AND PERMANENTLY EXPOSED TO EARTH: 3

   B. CONCRETE EXPOSED TO EARTH OR WEATHER
      NO 6 THROUGH NO 18 BAR 2
      NO 5 BAR AND SMALLER 1 1/2

   C. CONCRETE NOT EXPOSED TO WEATHER OR IN CONTACT WITH GROUND:
      SLABS, WALLS
      NO 14 AND NO 18 BAR 1 1/2
      NO 11 BAR, AND SMALLER 3/4
      BEAMS, COLUMNS, PRIMARY REINFORCEMENT, TIES, STIRRUPS, SPIRALS 1 1/2

4. ANCHOR BOLTS AND DOWELS: SECURELY HELD IN PLACE PRIOR TO PLACING CONCRETE.

5. PIPES, DUCTS, VENTS AND SIMILAR OPENINGS ARE NOT PERMITTED UNLESS SHOWN ON THE STRUCTURAL DRAWINGS.

6. CHAMFER: 3/4" ON ALL EXPOSED CORNERS U.O.N.

7. THE ARCHITECT SHALL BE NOTIFIED 24 HOURS IN ADVANCE OF ALL CONCRETE PLACEMENT.

8. FORMS FOR CONCRETE SHALL BE LAID OUT AND CONSTRUCTED TO PROVIDE THE SPECIFIED CAMBERS SHOWN ON THE DRAWINGS.

9. THE CONTRACTOR SHALL MAINTAIN A LOG OF STRUCTURAL SLAB ELEVATIONS BASED ON THE ARCHITECTURAL DRAWINGS PLUS THE ADDITION OF ANY CAMBERS INDICATED ON THE CONSTRUCTION DOCUMENTS. THIS LOG SHALL INDICATE SCREED ELEVATION PRIOR TO THE CONCRETE POUR, AND TOP OF CONCRETE SLAB PRIOR TO REMOVAL OF FORMS.

10. THE CONCRETE SLAB THICKNESS SHALL BE MAINTAINED UNLESS OTHERWISE SHOWN.

11. CEMENT SHALL BE ASTM C-150 TYPE II OR TYPE V. USE TYPE V CEMENT AND CONCRETE COMPLYING WITH CBC SECTION 1904.3 WHEN CONCRETE IS EXPOSED TO SOILS CONTAINING SULFATES.

12. CONTRACTOR SHALL SUBMIT CONCRETE MIX DESIGNS TO THE ARCHITECT FOR APPROVAL PRIOR TO CASTING CONCRETE.

13. WHERE CONTINUOUS BARS ARE CALLED OUT, PROVIDE TIED CONTACT SPLICES AS REQUIRED. STAGGER SPLICES OF ALTERNATE BARS BY THE FULL SPLICE LENGTH.

14. CONCRETE MIXES MAY CONTAIN FLY ASH. THE FLY ASH SHALL CONFORM TO ASTM C618 CLASS F AND THE LOSS OF IGNITION SHALL BE LIMITED TO 2%. THE ADDITION RATE SHALL NOT EXCEED 15% OF THE CEMENT WEIGHT. THE CONTRACTOR SHALL SUBMIT ALL CERTIFICATES SHOWING THE FLY ASH CONFORMS TO THE ABOVE CRITERIA.

16. AGGREGATE FOR HARD ROCK CONCRETE SHALL CONFORM TO ALL REQUIREMENTS AND TESTS OF ASTM C33 AND PROJECT SPECIFICATIONS. EXCEPTIONS MAY BE USED ONLY WITH PERMISSION OF THE STRUCTURAL ENGINEER.

17. AT EXTERIOR HORIZONTAL CONSTRUCTION JOINTS (CJ) THE SURFACE TO RECEIVE NEW CONCRETE SHALL BE PREPARED IN THE FOLLOWING MANNER.

    A. SAND BLAST THE SURFACE TO 1/4 INCH AMPLITUDE EXPOSING THE CONCRETE MATRIX.

    B. DAMPEN TO SATURATED SURFACE DRY PRIOR TO PLACING NEW CONCRETE.

MASONRY

1. CONCRETE BLOCK: CBC STANDARD 21-4, ASTM C-90, GRADE N, MEDIUM WEIGHT, OPEN END UNITS. PROVIDE BOND BEAM UNITS AT ALL HORIZONTAL REINFORCEMENT. f'm = 1500 P.S.I.

2. ALL VERTICAL STEEL SHALL BE CENTERED ON THE WALL, EXCEPT VERTICAL REINFORCING IN WALLS WHICH RETAIN EARTH SHALL BE POSITIONED AS SHOWN ON SECTIONS AND DETAILS AND 3/4" FROM INSIDE SURFACE OF FACE SHELL.

3. REINFORCEMENT SPLICES: LAP 48 BAR DIAMETERS OR 1'-8", WHICHEVER IS GREATER, U.O.N.

MASONRY (CONTINUED)

4. MORTAR: CBC STANDARD 21-15 TYPE S WITH A COMPRESSIVE STRENGTH OF 1800 P.S.I. AT 28 DAYS. JOINTS SHALL BE LIGHTLY COMPRESSED.

5. GROUT: CBC STANDARD 21-19 WITH A COMPRESSIVE STRENGTH OF 2,000 P.S.I. AT 28 DAYS. ALL GROUT SHALL CONTAIN SIKA GROUT AID PER MANUFACTURER'S RECOMMENDATIONS.

6. ALL MASONRY SHALL BE RUNNING BOND AND SOLID GROUTED.

7. HORIZONTAL CONSTRUCTION JOINTS IN GROUT POUR SHALL BE MADE BY STOPPING THE GROUT 1-1/2" BELOW TOP OF MASONRY UNIT.

8. ALL GROUT SHALL BE VIBRATED WITH HIGH FREQUENCY INTERNAL MECHANICAL VIBRATING EQUIPMENT.

9. GROUTING OF WALLS SHALL COMPLY WITH THE CBC REQUIREMENTS FOR LOW LIFT GROUTING.

REINFORCING STEEL

1. ALL REINFORCING STEEL SHALL BE EPOXY COATED AND CONFORM TO THE REQUIREMENTS OF ASTM A615 GRADE 60 AND A934, EXCEPT #3 BARS AND WIRE TIES MAY HAVE Fy = 40,000 P.S.I. MIN.

2. VERTICAL REINFORCEMENT SHALL BE DOWELED TO THE SUPPORTING MEMBERS WITH THE SAME SIZE AND SPACING OF REINFORCEMENT AS CALLED FOR IN THE DRAWINGS OR STANDARD NOTES.

3. WELDING OF REINFORCEMENT IS NOT PERMITTED.

4. SPACER TIES: FURNISH #3 TIES AT 24" O.C. IN ALL BEAMS AND FOOTINGS, UNLESS OTHERWISE SHOWN IN DETAILS.

5. WELDED WIRE MESH SHALL BE EPOXY COATED AND CONFORM TO ASTM A497 AND A884, FLAT SHEETS.

STRUCTURAL STEEL

1. ALL STRUCTURAL STEEL SHALL CONFORM TO ASTM A572 GRADE 50, Fy = 50 K.S.I., AND SHALL BE FABRICATED ACCORDING TO AISC PRACTICE AND SPECIFICATIONS FOR BUILDINGS (UNLESS OTHERWISE SPECIFIED).

2. ALL STRUCTURAL HOLLOW TUBES SHALL CONFORM TO ASTM A 500 GRADE B. STEEL PIPE SHALL CONFORM TO ASTM A53, GRADE B. STRUCTURAL STEEL PLATES, CHANNELS & ANGLES SHALL BE ASTM A36, FY=36 K.S.I.

3. BOLTS SHALL CONFORM TO ASTM A 307 OR A325, U.O.N. ALL BOLTS SHALL BE INSTALLED WITH CUT STEEL WASHERS. BOLT HOLES SHALL BE 1/16-INCH OVERSIZED.

4. ALL WELDING SHALL BE PERFORMED BY CERTIFIED OPERATORS UNDER THE SUPERVISION OF AN APPROVED FABRICATOR USING THE ELECTRIC SHIELDED ARC PROCESS AS FORMULATED BY THE AMERICAN WELDING SOCIETY.

5. STEEL SHALL BE IDENTIFIED BY HEAT OR MELT NUMBERS AND SHALL BE ACCOMPANIED BY TEST REPORTS.

6. AISC STANDARD BEAM CONNECTIONS SHALL BE USED FOR CONNECTIONS NOT SHOWN (AISC 9TH EDITION OR EQUAL) USING 3/4-INCH BOLTS.

7. BASE PLATES SHALL BE BEDDED ON MINIMUM 1-INCH DRYPACK GROUT (NON-SHRINK GROUT).

8. ALL STEEL SHALL BE FABRICATED TO FIT TOGETHER PLUMB AND TRUE IN THE FIELD WITHOUT ALTERATION.

9. WELDING ELECTRODES FOR MANUAL SHIELDED METAL-ARC WELDING SHALL CONFORM TO SPECIFICATIONS FOR MILD STEEL COVERED ARC WELDING ELECTRODES, AWS A5.1, OR SPECIFICATION FOR LOW-ALLOY STEEL COVERED ARC- WELDING ELECTRODES AWS A5.5. ELECTRODES SHALL BE E70 SERIES.

10. ELECTRODES USED IN THE GAS METAL ARC PROCESS SHALL CONFORM TO SPECIFICATION FOR MILD STEEL ELECTRODES FOR GAS METAL-ARC WELDING AWS A5.18.

11. REFER TO SPECIAL INSPECTION NOTES FOR WELDING REQUIREMENTS.

12. EXCEPT AS SUBSEQUENTLY NOTED, HIGH STRENGTH BOLTS NEED NOT BE TIGHTENED BEYOND THE SNUG-TIGHT CONDITION, AS DEFINED IN SECTION 8 (C) "OF THE SPECIFICATIONS FOR STRUCTURAL JOINTS USING ASTM A325 OR A490 BOLTS." FOR CONNECTIONS SUBJECT TO DIRECT TENSION, CONNECTIONS FOR BRACED FRAMES, AND OTHER CONNECTIONS SHOWN OR NOTED ON THE PLANS AS S.C. (SLIP CRITICAL) OR FULLY TENSIONED, BOLTS SHALL BE TIGHTENED BY ONE OF THE METHODS DESCRIBED IN SECTION 8 (D) AND TO THE MINIMUM TENSION SPECIFIED IN SECTION 8 (D), TABLE 4.

13. ALL STRUCTURAL STEEL SHALL BE HOT DIP GALVANIZED.

DRIVEPIN FASTENERS (PINS)

1. INSTALLED WITH LOW VELOCITY, POWDER ACTUATED TOOLS.

2. FASTENERS (PINS) SHALL BE ICBO APPROVED FOR USE IN THE TYPE OF CONCRETE SPECIFIED.

   SIMPSON . . . . ESR #2138
   HILTI X-U . . . . ESR #2269
   ITW RAMSET . . . . ESR #1799

   SUBSTITUTIONS SHALL BE APPROVED BY THE ENGINEER OF RECORD, BECAUSE CONDITIONS OF USE IN ESR REPORTS MAY VARY.

3. FASTENERS (PINS) SHALL BE THE HEADED TYPE, INSTALLED WITH OR WITHOUT WASHERS AS RECOMMENDED BY ESR REPORT.

4. DRIVE PIN FASTENERS (PINS) SHALL NOT BE INSTALLED UNTIL CONCRETE HAS REACHED THE SPECIFIED 28 DAY STRENGTH.

5. THE DIAMETER AND MINIMUM EMBEDMENT SHALL BE AS INDICATED ON THE DRAWINGS.

6. WHEN INSTALLING POWDER DRIVEN PINS IN EXISTING NON-PRESTRESSED REINFORCED CONCRETE USE CARE AND CAUTION TO AVOID CUTTING OR DAMAGING THE EXISTING REINFORCING BARS. MAINTAIN A MINIMUM CLEARANCE OF ONE INCH BETWEEN THE REINFORCEMENT AND THE PIN.

MISCELLANEOUS METALS

1. MISCELLANEOUS METALS SHALL INCLUDE ITEMS MANUFACTURED AND SHOP FORMED OR FABRICATED ITEMS NOT SPECIFIED ELSEWHERE.

2. ALL MISCELLANEOUS STEEL ITEMS SHALL BE SHOP PRIMED UNLESS NOTED OTHERWISE. SEE STRUCTURAL STEEL NOTES.

3. WELDING SHALL COMPLY WITH AWS PROCEDURES, AND WELDERS MUST BE CERTIFIED.

4. ALL MISCELLANEOUS METALS SHALL BE HOT DIP GALVANIZED AND SHALL COMPLY WITH ASTM A123, WITH MINIMUM COATING THICKNESS PER TABLE.

5. PAINTING SHALL COMPLY WITH CARB AND EPA REGULATIONS.

6. STEEL SHAPES, PLATES AND BARS – ASTM A36. STAINLESS STEEL SHAPES PLATES AND BARS SHALL BE ASTM A276 316 S.S. Fy = 30 K.S.I.

7. STEEL PIPE – ASTM A501 OR ASTM A53, TYPE E OR S.

8. STEEL TUBE – ASTM A500 GRADE B.

9. BOLTS: ASTM A307 U.O.N.

10. FURNISH ALL NECESSARY ANCHORAGE DEVICES, AND FASTENERS FOR COMPLETE INSTALLATION.

11. VERIFY FIELD CONDITIONS SO THAT ITEMS CAN BE INSTALLED WITHOUT CUTTING AND FITTING IN THE FIELD.

12. FIT EXPOSED CONNECTIONS ACCURATELY TO FORM TIGHT JOINTS.

13. TOUCH UP PRIMED AND GALVANIZED SURFACES DAMAGED OR FIELD FITTED.

S-1

SPEC. NO. 8147

MARTIN & LIBBY
STRUCTURAL ENGINEERS
4452 Glacier Avenue, San Diego, CA 92120
Ph (619) 280-9307 F (619) 284-3533

REGISTERED PROFESSIONAL ENGINEER — JEAN M. LIBBY — Exp. 03-31-13 — CIVIL — STATE OF CALIFORNIA

PLANS FOR THE CONSTRUCTION OF
South Mission Beach Lifeguard Station

General Notes — S1.1

CITY OF SAN DIEGO, CALIFORNIA
ENGINEERING & CAPITAL PROJECTS
ARCHITECTURAL ENGINEERING & CONTRACTS DIVISION
SHEET 48 OF 94 SHEETS

WBS S-00791

APPROVED: [signature] 10/13/2014
FOR CITY ENGINEER — DATE

SUBMITTED BY: JIHAD SLEIMAN, PROJECT MANAGER
YOUSIF BENYAMIN, PROJECT ENGINEER

DESCRIPTION	BY	APPROVED	DATE	FILMED
ORIGINAL	WH/TT			

218-1693
CCS27 COORDINATES
1858-6253
CCS83 COORDINATES

CONTRACTOR ______ DATE STARTED ______
INSPECTOR ______ DATE COMPLETED ______

32849-48-D

Proprietary design: These drawings and design are protected by common law copyright. All patentable material contained herein and originating with Dominy + Associates Architects @ domusstudio LLP shall be the property of Dominy + Associates Architects @ domusstudio LLP
© COPYRIGHT October 09, 2014 at 10:21:45

STEEL SHEET PILES

1. STEEL SHEET PILES SHALL BE AS MANUFACTURED BY NUCOR CORPORATION OR AN APPROVED EQUAL.
2. STEEL SHEET PILES SHALL BE MANUFACTURED FROM ASTM A690 GRADE 50 MATERIAL.
3. CONTRACTOR SHALL SUBMIT DATA ON SHEET PILE PROPOSED FOR USE. THIS DATA SHALL INCLUDE CROSS SECTION DATA, DATA ON THE MATERIAL FROM WHICH THE PILES WERE MANUFACTURED AND A CERTIFICATE OF CONFORMANCE.

WOOD

1. ALL WOOD MEMBERS SHALL BE DOUGLAS FIR/LARCH, CONFORMING TO CBC STANDARD 23-1 USING CURRENT WWPA GRADING RULES, UNLESS OTHERWISE NOTED. EACH PIECE OF LUMBER SHALL BE GRADE MARKED.

   HORIZONTAL FRAMING MEMBERS: THICKNESS 2" & 3": NO 2. ALL OTHER HORIZONTAL MEMBERS: NO 1, U.O.N.

   VERTICAL FRAMING MEMBERS: 4x AND 6x POSTS: NO 1. ALL OTHER VERTICAL MEMBERS: NO 2

2. ALL PLYWOOD SHALL CONFORM TO CBC STANDARD 23-2 AND SHALL BE IDENTIFIED WITH APA GRADE MARKS. SEE PLANS FOR THICKNESS.

   ROOF SHEATHING: . . . . 1/2" STRUCTURAL I (24/16) OR ICC EQUAL; 3/4" STRUCTURAL I (48/24) OR ICC EQUAL

3. RUN LONG DIMENSION OF PLYWOOD PERPENDICULAR TO FRAMING MEMBERS. NAIL AS INDICATED ON PLANS WITH COMMON WIRE NAILS. PROVIDE 2x OR 3x BLOCKING AT JOINTS PERPENDICULAR TO FRAMING MEMBERS AS INDICATED ON PLAN. ALL FRAMING MEMBERS SHALL BE ON A 4'-0" MODULE TO COINCIDE WITH PLYWOOD PATTERN.
4. 2" SOLID BLOCKING SHALL BE PLACED BETWEEN ALL JOISTS AND RAFTERS AT SUPPORTS.
5. LAG SCREWS: PREDRILL WITH A BIT SIZE OF 65% OF THE SHANK DIAMETER FOR THE THREADED PORTION. LEAD HOLES SHALL BE THE SAME LENGTH AS THE UNTHREADED SHANK AND THE SAME DIAMETER AS THE SHANK. SCREW ALL LAGS INTO PLACE. CUT WASHERS SHALL BE PROVIDED UNDER HEADS WHICH BEAR ON WOOD.
6. BOLTS IN WOOD SHALL NOT BE LESS THAN 7 DIAMETERS FROM THE END AND 4 DIAMETERS FROM THE EDGE UNLESS OTHERWISE DETAILED.
7. DRILL HOLES 1/16 INCH LARGER IN DIAMETER THAN THE BOLT DIAMETER BEING USED. BOLT THREADS SHALL NOT BEAR ON WOOD. PROVIDE WASHERS WHERE BOLT HEAD OR NUT BEAR ON WOOD. PROVIDE SQUARE PLATE WASHERS FOR SILL BOLTS.
8. NO CHECKS OR SPLITS ALLOWED AT AREAS TO BE BOLTED.
9. ALL CONNECTORS SHALL BE BY SIMPSON STRONG-TIE COMPANY OR ICC EQUAL.
10. DIAPHRAGM (VERTICAL AND HORIZONTAL) SHEATHING NAILS OR OTHER APPROVED CONNECTORS SHALL BE DRIVEN SO THAT THEIR HEAD OR CROWN IS FLUSH WITH THE SURFACE OF THE SHEATHING.
11. ALL CONNECTORS AND FASTENERS SHALL BE HOT DIP GALVANIZED.

STRUCTURAL GLUED LAMINATED TIMBERS

1. MATERIAL, MANUFACTURER AND QUALITY CONTROL SHALL BE IN CONFORMANCE WITH CURRENT PROVISIONS OF AMERICAN NATIONAL STANDARD ANSI/AITC A190.1 AND ASTM D 3737, "DESIGN AND MANUFACTURER OF STRUCTURAL GLUED-LAMINATED TIMBER." MEMBERS SHALL BE MARKED WITH QUALITY MARK.
2. AN AMERICAN INSTITUTE OF TIMBER CONSTRUCTION (AITC) CERTIFICATE OF COMPLIANCE FOR GLUED LAMINATED WOOD MEMBERS SHALL BE GIVEN TO THE BUILDING INSPECTOR PRIOR TO INSTALLATION.
3. ADHESIVE SHALL MEET THE REQUIREMENTS FOR WET CONDITIONS OF SERVICE.
4. ALL SIMPLE SPAN BEAMS TO BE COMBINATION SYMBOL 24F-V4 IN CONFORMANCE WITH CURRENT VERSION OF AITC 117, "STANDARD SPECIFICATIONS FOR STRUCTURAL GLUED-LAMINATED TIMBER OF SOFTWOODS SPECIES."
5. ALL CANTILEVER BEAMS TO BE COMBINATION SYMBOL 24F-V8 IN CONFORMANCE WITH CURRENT VERSION OF AITC 117, "STANDARD SPECIFICATIONS FOR STRUCTURAL GLUED-LAMINATED TIMBER OF SOFTWOODS SPECIES."
6. MOISTURE CONTENT FOR STRUCTURAL GLUED-LAMINATED TIMBERS SHALL NOT EXCEED 16%.

TABLE 23-11-B-1 NAILING SCHEDULE

. . . (MINIMUM UNLESS NOTED OTHERWISE) . . .

JOIST TO SILL OR GIRDER, TOENAIL	(3) 8d
BRIDGING TO JOIST, TOENAIL EACH END	(2) 8d
SOLE PLATE TO JOIST OR BLOCKING, TYPICAL FACE NAIL	16d @ 16" O.C.
SOLE PLATE TO JOIST OR BLOCKING AT BRACED WALL PANELS	(3) 16d PER 16"
TOP PLATE TO STUD END NAIL	(2) 16d
STUD TO SOLE PLATE	(4) 8d TOENAIL, OR (2) 16d, END NAIL
DOUBLE STUDS, FACE NAIL	16d @ 24" O.C.
DOUBLED TOP PLATES, TYPICAL FACE NAIL	16d @ 16" O.C.
DOUBLE TOP PLATES, LAP SPLICE	(8) 16d
BLOCKING BETWEEN JOISTS OR RAFTERS TO TOP PLATE, TOENAIL	(3) 8d
RIM JOIST TO TOP PLATE, TOENAIL	8d @ 6" O.C.
TOP PLATES, LAPS AND INTERSECTIONS, FACE NAIL	(2) 16d
CONTINUOUS HEADER, TWO PIECES	16d @ 16" O.C. ALONG EACH EDGE
CONTINUOUS HEADER TO STUD, TOENAIL	(4) 8d
RAFTER TO PLATE, TOENAIL	(3) 8d
BUILT-UP CORNER STUDS	16d @ 24" O.C. @ EACH BEARING
BUILT-UP GIRDER AND BEAMS	20d @ 32" O.C. TOP & BOTTOM & STAGGERED (2) 20d @ ENDS AND EACH SPLICE

NOTES:
1. COMMON OR BOX NAILS MAY BE USED EXCEPT WHERE OTHERWISE NOTED.

STRUCTURAL OBSERVATION

1. STRUCTURAL OBSERVATION SHALL BE PROVIDED BY THE ENGINEER OF RECORD IN ACCORDANCE WITH SECTION 1710 OF THE CALIFORNIA BUILDING CODE FOR THE FOLLOWING ITEMS:
   - A. FOUNDATIONS.
   - B. CONCRETE OR MASONRY BEARING AND SHEAR WALLS.
   - C. REINFORCED CONCRETE COLUMNS, BEAMS AND SUPPORTED SLABS.
   - G. WOOD FRAMING AND DIAPHRAGMS.
2. STRUCTURAL OBSERVATION IS REQUIRED IN ADDITION TO ALL OTHER INSPECTIONS.
3. STRUCTURAL OBSERVATION MEANS THE VISUAL OBSERVATION OF THE STRUCTURAL SYSTEM BY THE ENGINEER OF RECORD, FOR GENERAL CONFORMATION TO THE APPROVED PLANS AND SPECIFICATIONS, AT SIGNIFICANT CONSTRUCTION STAGES FOR THE ITEMS LISTED AND AT COMPLETION OF THE STRUCTURAL SYSTEM. STRUCTURAL OBSERVATION DOES NOT INCLUDE OR WAIVE THE RESPONSIBILITY FOR THE INSPECTIONS REQUIRED BY SECTION 110, 1704 OR OTHER SECTIONS OF THE CBC.
4. IT IS THE RESPONSIBILITY OF THE CONTRACTOR TO REQUEST STRUCTURAL OBSERVATION BY THE ENGINEER. THE ENGINEER SHALL BE GIVEN A MINIMUM OF TWO WORK DAYS NOTICE BY THE CONTRACTOR PRIOR TO PERFORMING STRUCTURAL OBSERVATION.

QUALITY CONTROL

1. THE SPECIAL INSPECTOR MUST BE CERTIFIED BY THE CITY OF SAN DIEGO, DEVELOPMENT SERVICES, IN THE CATEGORY OF WORK REQUIRED TO HAVE SPECIAL INSPECTION.
2. THE CONSTRUCTION MATERIALS TESTING LABORATORY MUST BE APPROVED BY THE CITY OF SAN DIEGO, DEVELOPMENT SERVICES, FOR TESTING OF MATERIALS, SYSTEMS, COMPONENTS AND EQUIPMENT.
3. FABRICATOR MUST BE REGISTERED AND APPROVED BY THE CITY OF SAN DIEGO, DEVELOPMENT SERVICES, FOR THE FABRICATION OF MEMBERS AND ASSEMBLIES ON THE PREMISES OF THE FABRICATOR'S SHOP.
4. FABRICATOR SHALL SUBMIT AN "APPLICATION TO PERFORM OFF-SITE FABRICATION" TO THE INSPECTION SERVICES DIVISION FOR APPROVAL PRIOR TO THE COMMENCEMENT OF FABRICATION.
5. FABRICATOR SHALL SUBMIT A "CERTIFICATE OF COMPLIANCE FOR OFF-SITE FABRICATION" TO THE INSPECTION SERVICES DIVISION PRIOR TO ERECTION OF FABRICATED ITEMS AND ASSEMBLIES.
6. THE SPECIAL INSPECTIONS IDENTIFIED ON PLANS ARE, IN ADDITION TO, AND NOT SUBSTITUTE FOR, THOSE INSPECTIONS REQUIRED TO BE PERFORMED BY A CITY'S BUILDING INSPECTOR.
7. FABRICATION OF MEMBERS AND ASSEMBLIES DONE IN FABRICATOR'S SHOP APPROVED BY INSPECTION SERVICES NEED NOT HAVE CONTINUOUS OR PERIODIC SPECIAL INSPECTION. AT COMPLETION OF FABRICATION, THE APPROVED FABRICATOR SHALL SUBMIT THE "CERTIFICATE OF COMPLIANCE" FORM TO INSPECTION SERVICES.

SPECIAL INSPECTION

SPECIAL INSPECTION SHALL BE IN ACCORDANCE WITH THE FOLLOWING:

1. STRUCTURAL STEEL AND WELDING: CBC SECTION 1704.3 AND TABLE 1704.3.
2. CONCRETE CONSTRUCTION: CBC SECTION 1704.4 AND TABLE 1704.4.
3. MASONRY CONSTRUCTION: CBC SECTION 1704.5 AND TABLE 1704.5.1 (LEVEL 1 INSPECTION).
4. WOOD CONSTRUCTION: CBC SECTION 1704.6.
5. SOIL CONDITIONS, FILL PLACEMENT AND LOAD BEARING REQUIREMENTS: CBC SECTION 1704.7 AND TABLE 1704.7.
6. SPRAYED FIRE-RESISTANT MATERIALS: CBC SECTION 1704.10.1 AND TABLE 1704.10.5.
7. MASTIC AND INTUMESCENT FIRE-RESISTING COATING: CBC SECTION 1704.11.
8. POST INSTALLED ANCHORS: CBC SECTION 1704.4 AND TABLE 1704.4.
   - A. DRILLED IN ANCHORS.
   - B. ADHESIVE ANCHORS.
9. CONTRACTOR OR CONSTRUCTION MANAGER SHALL PROVIDE A WRITTEN STATEMENT ACKNOWLEDGING SPECIAL INSPECTIONS, STATING QUALITY CONTROL PROCEDURES INCLUDING METHOD, FREQUENCY & DISTRIBUTION OF REPORTS. THE STATEMENT SHALL ALSO IDENTIFY INDIVIDUALS EXERCISING CONTROL INCLUDING QUALIFICATIONS AND POSITION IN ORGANIZATION. THIS SHALL BE SUBMITTED PRIOR TO THE START OF WORK.
10. A CERTIFICATE OF SATISFACTORY COMPLETION OF WORK REQUIRING SPECIAL INSPECTION MUST BE COMPLETED AND SUBMITTED TO THE INSPECTION SERVICES DIVISION.
11. THE SPECIAL INSPECTIONS LISTED, ARE IN ADDITION TO, THE CALLED INSPECTIONS REQUIRED BY SECTION 108 OF THE CBC, AS AMENDED. SPECIAL INSPECTION IS NOT A SUBSTITUTE FOR INSPECTIONS REQUIRED TO BE PERFORMED BY A CITY BUILDING INSPECTOR.
12. THE SPECIAL INSPECTIONS MUST BE CERTIFIED BY THE CITY OF SAN DIEGO TO PERFORM THE TYPE OF INSPECTION SPECIFIED. EXCEPTIONS:
    - A. SOILS INSPECTIONS BY THE SOILS ENGINEER OF RECORD.
    - B. WHEN WAIVED BY THE BUILDING OFFICIAL.
13. IT IS THE RESPONSIBILITY OF THE CONTRACTOR TO NOTIFY THE SPECIAL INSPECTOR OR INSPECTION AGENCY AT LEAST ONE WORKING DAY PRIOR TO PERFORMING ANY WORK THAT REQUIRES SPECIAL INSPECTION.
14. SPECIALLY INSPECTED WORK THAT IS INSTALLED OR COVERED WITHOUT THE APPROVAL OF THE CITY INSPECTOR IS SUBJECT TO REMOVAL OR EXPOSURE.
15. THE SPECIAL INSPECTOR SHALL SUBMIT IN WRITING A REPORT OF OBSERVATIONS AND TESTING FOR EACH INSPECTION.
16. THE INSPECTOR SHALL REPORT IN ADVANCE THEIR ASSIGNMENT TO THE CITY OF SAN DIEGO BUILDING INSPECTION DEPARTMENT.

TABLE 1704.3
REQUIRED VERIFICATION AND INSPECTION OF STEEL CONSTRUCTION

VERIFICATION AND INSPECTION	CONTIN-UOUS	PERI-ODIC	REFERENCED STANDARD[a]	IBC REFERENCE
1. MATERIAL VERIFICATION OF STRUCTURAL STEEL:				
a. IDENTIFICATION MARKINGS TO CONFORM TO AISC 360.	–	–	AISC 360, SECTION M5.5	
b. MANUFACTURERS' CERTIFIED MILL TEST REPORTS.	–	X	–	
2. MATERIAL VERIFICATION OF WELD FILLER MATERIALS:				
a. IDENTIFICATION MARKINGS TO CONFORM TO AWS SPECIFICATION IN THE APPROVED CONSTRUCTION DOCUMENTS.	–	X	AISC 360, SECTION A3.5 & APPLICABLE AWS AS DOCUMENTS	–
b. MANUFACTURER'S CERTIFICATE OF COMPLIANCE REQUIRED.	–	X	–	–
3. INSPECTION OF WELDING:				
a. STRUCTURAL STEEL AND COLD-FORMED STEEL DECK:				
1) COMPLETE AND PARTIAL PENETRATION GROOVE WELDS.	X	–	AWS D1.1	1704.3.1
2) MULTIPASS FILLET WELDS.	X	–		
3) SINGLE-PASS FILLET WELDS > 5/16".	X	–		
5) SINGLE-PASS FILLET WELDS ≤ 5/16".	–	X		

FOR SI: 1 INCH = 25.4 mm.
a. WHERE APPLICABLE, SEE ALSO SECTION 1707.1, SPECIAL INSPECTION FOR SEISMIC RESISTANCE.

SPECIAL INSPECTION (CONTINUED)

TABLE 1704.4
REQUIRED VERIFICATION AND INSPECTION OF CONCRETE CONSTRUCTION

VERIFICATION AND INSPECTION	CONTIN-UOUS	PERI-ODIC	REFERENCED STANDARD*	IBC REFERENCE
1. INSPECTION OF REINFORCING STEEL AND PLACEMENT.	–	X	ACI 318: 3.5, 7.1-7.7	1913.4
2. INSPECT BOLTS TO BE INSTALLED IN CONCRETE PRIOR TO AND DURING PLACEMENT OF CONCRETE WHERE ALLOWABLE LOADS HAVE BEEN INCREASED.	X	–	ACI 318: 8.1.3, 21.2.8	1911.5
3. INSPECTIONS OF ANCHORS INSTALLED IN HARDENED CONCRETE.	–	X	ACI 318: 3.8.6, 8.1.3, 21.2.8	1912.1
4. VERIFYING USE OF REQUIRED DESIGN MIX.	–	X	ACI 318: CH. 4, 5.2-5.4	1904.2.2, 1913.2, 1913.3
5. AT THE TIME FRESH CONCRETE IS SAMPLED TO FABRICATE SPECIMENS FOR STRENGTH TESTS, PERFORM SLUMP AND AIR CONTENT TESTS, AND DETERMINE THE TEMPERATURE OF THE CONCRETE.	X	–	ASTM C 172 ASTM C 31 ACI 318: 5.6, 5.8	1913.10
6. INSPECTION OF CONCRETE AND SHOTCRETE PLACEMENT FOR PROPER APPLICATION TECHNIQUES.	X	–	ACI 318: 5.9, 5.10	1913.6, 1913.7, 1913.8
7. INSPECTION FOR MAINTENANCE OF SPECIFIED CURING TEMPERATURE AND TECHNIQUES.	–	X	ACI: 5.11-5.13	1913.9
8. ERECTION OF PRECAST CONCRETE MEMBERS.	–	X	ACI 318: CH. 16	–
9. INSPECT FORMWORK FOR SHAPE, LOCATION AND DIMENSIONS OF THE CONCRETE MEMBER BEING FORMED.	–	X	ACI 318: 6.1.1	–

TABLE 1704.5.1
LEVEL 1 SPECIAL INSPECTION

INSPECTION TASK	FREQUENCY OF INSPECTION: CONTIN-UOUS	FREQUENCY OF INSPECTION: PERIODIC	REFERENCE FOR CRITERIA: IBC SECTION	REFERENCE FOR CRITERIA: TMS 602/ ACI 530/ ASCE 5[a]	REFERENCE FOR CRITERIA: TMS 602/ ACI 530.1/ ASCE 6[a]
1. COMPLIANCE WITH REQUIRED INSPECTION PROVISIONS OF THE CONSTRUCTION DOCUMENTS AND THE APPROVED SUBMITTALS SHALL BE VERIFIED.	–	X	–	–	ART 1.5
2. VERIFICATION OF f'_m AND f'_{AAC} PRIOR TO CONSTRUCTION EXCEPT WHERE SPECIFICALLY EXEMPTED BY THIS CODE.	–	X	–	–	ART 1.4B
3. VERIFICATION OF SLUMP FLOW AND VSI AS DELIVERED TO THE SITE FOR SELF-CONSOLIDATING GROUT.	X	–	–	–	ART 1.5B.1.b.3
4. AS MASONRY CONSTRUCTION BEGINS, THE FOLLOWING SHALL BE VERIFIED TO ENSURE COMPLIANCE:					
a. PROPORTIONS OF SITE-PREPARED MORTAR.	–	X	–	–	ART 2.6A
b. CONSTRUCTION OF MORTAR JOINTS.	–	X	–	–	ART 3.3B
c. LOCATION OF REINFORCEMENT, CONNECTORS AND ANCHORAGES.	–	X	–	–	ART 3.4, 3.6A
d. GRADE AND SIZE OF ANCHORAGES.	–	X	–	–	ART 2.4B, 2.4H

SPECIAL INSPECTION (CONTINUED)

TABLE 1704.5.1 (CONTINUED)
LEVEL 1 SPECIAL INSPECTION

5. DURING CONSTRUCTION THE INSPECTION PROGRAM SHALL VERIFY:					
a. SIZE AND LOCATION OF STRUCTURAL ELEMENTS.	–	X	–	–	ART 3.3F
b. TYPE, SIZE AND LOCATION OF ANCHORS, INCLUDING OTHER DETAILS OF ANCHORAGE OF MASONRY TO STRUCTURAL MEMBERS, FRAMES OR OTHER CONSTRUCTION.	–	X	–	SEC 1.2.2(e), 1.16.1	–
c. SPECIFIED SIZE, GRADE AND TYPE OF REINFORCEMENT, ANCHOR BOLTS AND ANCHORAGES.	–	X	–	SEC 1.15	ART 2.4, 3.4
d. WELDING OF REINFORCING BARS.	X	–	–	SEC 2.1.9.7.2, 3.3.3.4(b)	–
e. PREPARATION, CONSTRUCTION AND PROTECTION OF MASONRY DURING COLD WEATHER (TEMPERATURE BELOW 40°F) OR HOT WEATHER (TEMPERATURE ABOVE 90°F).	–	X	SEC 2104.3, 2104.4	–	ART 1.8C, 1.8D
6. PRIOR TO GROUTING, THE FOLLOWING SHALL BE VERIFIED TO ENSURE COMPLIANCE:					
a. GROUT SPACE IS CLEAN.	–	X	–	–	ART 3.2D
b. PLACEMENT OF REINFORCEMENT, AND ANCHORAGES CONNECTORS	–	X	–	SEC 1.13	ART 3.4
c. PROPORTIONS OF SITE-PREPARED GROUT	–	X	–	–	ART 2.6B
d. CONSTRUCTION OF MORTAR JOINTS.	–	X	–	–	ART 3.3B
7. GROUT PLACEMENT SHALL BE VERIFIED TO ENSURE COMPLIANCE:	X	–	–	–	ART 3.5
8. PREPARATION OF ANY REQUIRED GROUT SPECIMENS, MORTAR SPECIMENS AND/OR PRISMS SHALL BE OBSERVED.	–	X	SEC 2105.2.2, 2105.3	–	ART 1.4

FOR SI: °C = [(°F) − 32]/1.8.
a. THE SPECIFIC STANDARDS REFERENCED ARE THOSE LISTED IN CHAPTER 35.

S-2

SPEC. NO. 5147

MARTIN & LIBBY
STRUCTURAL ENGINEERS
4452 Glacier Avenue, San Diego, CA 92120
Ph (619) 280-9307 F (619) 284-3533

REGISTERED PROFESSIONAL ENGINEER JEAN M. LIBBY Exp. 03-31-13 CIVIL STATE OF CALIFORNIA

PLANS FOR THE CONSTRUCTION OF
South Mission Beach Lifeguard Station

General Notes | S1.2

CITY OF SAN DIEGO, CALIFORNIA
ENGINEERING & CAPITAL PROJECTS
ARCHITECTURAL ENGINEERING & CONTRACTS DIVISION
SHEET 49 OF 94 SHEETS

WBS S-00791

APPROVED: FOR CITY ENGINEER — DATE 10/13/2014

SUBMITTED BY: JIHAD SLEIMAN, PROJECT MANAGER
YOUSIF BENYAMIN, PROJECT ENGINEER
218-1693 CCS27 COORDINATES
1856-6253 CCS83 COORDINATES

DESCRIPTION	BY	APPROVED	DATE	FILMED
ORIGINAL	WH/TT			

CONTRACTOR ____ DATE STARTED ____
INSPECTOR ____ DATE COMPLETED ____

32849-49-D

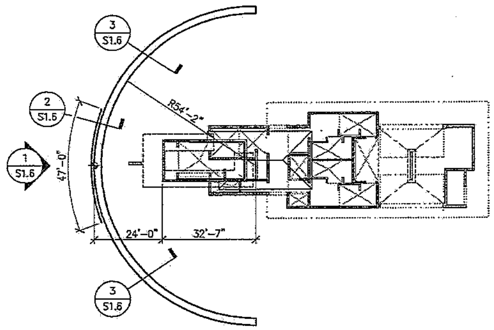

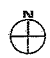

SHEET PILE PLAN

SCALE: 1" = 20'-0"

A

SPECIAL INSPECTION (CONTINUED)

TABLE 1704.7
REQUIRED VERIFICATION AND INSPECTION OF SOILS

VERIFICATION AND INSPECTION TASK	CONTINUOUS DURING TASK LISTED	PERIODICALLY DURING TASK LISTED
1. VERIFY MATERIALS BELOW FOOTINGS ARE ADEQUATE TO ACHIEVE THE DESIGN BEARING CAPACITY.	–	X
2. VERIFY EXCAVATIONS ARE EXTENDED TO PROPER DEPTH AND HAVE REACHED PROPER MATERIAL.	–	X
3. PERFORM CLASSIFICATION AND TESTING OF CONTROLLED FILL MATERIALS.	–	X
4. VERIFY USE OF PROPER MATERIALS, DENSITIES AND LIFT THICKNESS DURING PLACEMENT AND COMPACTION OF CONTROLLED FILL.	X	–
5. PRIOR TO PLACEMENT OF CONTROLLED FILL, OBSERVE SUBGRADE AND VERIFY THAT SITE HAS BEEN PREPARED PROPERLY.	–	X

SPECIAL INSPECTION (CONTINUED)

TABLE 1704.8
REQUIRED VERIFICATION AND INSPECTION OF PILE FOUNDATIONS TABLE

VERIFICATION AND INSPECTION TASK	CONTINUOUS DURING TASK LISTED	PERIODICALLY DURING TASK LISTED
1. VERIFY PILE MATERIALS, SIZES AND LENGTHS COMPLY WITH THE REQUIREMENTS.	X	–
2. DETERMINE CAPACITIES OF TEST PILES AND CONDUCT ADDITIONAL LOAD TESTS, AS REQUIRED.	X	–
3. OBSERVE DRIVING OPERATIONS AND MAINTAIN COMPLETE AND OCCURATE RECORDS FOR EACH PILE.	X	–
4. VERIFY PLACEMENT LOCATIONS AND PLUMBNESS, CONFIRM TYPE AND SIZE OF HAMMER, RECORD NUMBER OF BLOWS PER FOOT OF PENETRATION, DETERMINE REQUIRED PENETRATIONS TO ACHIEVE DESIGN CAPACITY, RECORD TIP AND BUTT ELEVATIONS AND DOCUMENT ANY PILE DAMAGE.	X	–
7. FOR SPECIALTY PILES, PERFORM ADDITONAL INSPECTIONS AS DETERMINED BY THE REGISTERED DESIGN PROFESSIONAL IN RESPONSIBLE CHARGE.	–	–

ABBREVIATIONS

&	AND
@	AT
A.B.	ANCHOR BOLT
ABV	ABOVE
A.C.	ASPHALT CONCRETE
A/C	AIR CONDITIONING
ADDL	ADDITIONAL
ALT	ALTERNATE
APPROX	APPROXIMATE
ARCH	ARCHITECT(URAL)
A.F.	BRACED FRAME
BLDG	BUILDING
BLK	BLOCK(ING)
BLKD	BLOCKED
BLW	BELOW
BM	BEAM
A.N.	BOUNDARY NAILING
B.O.F.	BOTTOM OF FOOTING
BRG	BEARING
BTM(B)	BOTTOM
BTWN	BETWEEN
C=	CAMBER
C.I.P.	CAST IN PLACE
C.J.	CONSTRUCTION JOINT
C.L. (℄)	CENTER LINE
CLG	CEILING
CLR	CLEAR(ANCE)
CNTR	CENTER(ED)
C.M.U.	CONCRETE MASONRY UNIT
COL	COLUMN
CONC	CONCRETE
CONN	CONNECT(ION)(OR)
CONST	CONSTRUCT(ION)
CONT	CONTINUOUS
CSK	COUNTERSINK
C.Y.	CUBIC YARD(S)
d	PENNY(NAILS)
DBL	DOUBLE
DEPT	DEPARTMENT
DIA (ø)	DIAMETER
DO, do	DITTO
DWG	DRAWINGS(S)
DWL	DOWEL(S)
(E)	EXISTING
EA	EACH
E.Z.	EACH FACE
E.J.	EXPANSION JOINT
EL	ELEVATION
ELEC	ELECTRICAL
ELEV	ELEVATOR
EMBED	EMBED(ED)(MENT)
E.N.	EDGE NAILING
EQ	EQUAL
EQUIP	EQUIPMENT
E.S.	EACH SIDE
E.W.	EACH WAY
EXIST (E)	EXISTING
EXP	EXPANSION
EXT	EXTERIOR
FDN	FOUNDATION
F.F.	FINISHED FLOOR
FIN	FINISH(ED)
FLR	FLOOR
FLNG	FLANGE
F.N.	FIELD NAILING
F.O.	FACE OF
F.O.C.	FACE OF CONCRETE
F.O.M.	FACE OF MASONRY
F.O.S.	FACE OF STUD
F.P.	FULL PENETRATION
FRMG	FRAMING
F.S.	FAR SIDE
FT	FOOT(FEET)
FTG	FOOTING
F.V.	FIELD VERIFY
GA	GAUGE(GAGE)
GALV	GALVANIZE(D)
G.L.	GLUE LAMINATED
G.L.B.	GLUED LAMINATED BEAM
GRD	GRADE
GYP	GYPSUM
GYP.BD.	GYPSUM WALLBOARD
HD	HOLDOWN
H.D.G.	HOT DIPPED GALVANIZED
HDR	HEADER
HGR	HANGER
HORIZ(H)	HORIZONTAL
H.S.B.	HIGH STRENGTH BOLT
HSS	HOLLOW STRUCTURAL SECTION
HT	HEIGHT
I.D.	INSIDE DIAMETER
IN	INCH(ES)
INT	INTERIOR
JST	JOIST
JT	JOINT
L	LONG(LENGTH)
LB	POUND(S)
Ld	DEVELOPMENT LENGTH
L.L.H.	LONG LEG HORIZONTAL
L.L.V.	LONG LEG VERTICAL
LONGIT	LONGITUDINAL
LTWT	LIGHTWEIGHT
MAS	MASONRY
MATL	MATERIAL
MAX	MAXIMUM
M.B.	MACHINE BOLT
MECH	MECHANICAL
MEZZ	MEZZANINE
MFR	MANUFACTURER
MIN	MINIMUM
MISC	MISCELLANEOUS
M.L.L.W.	MEAN LOWER LOW WATER
M.S.L.	MEAN SEA LEVEL
MTL	METAL
(N)	NEW
N.I.C.	NOT IN CONTRACT
NLG	NAILING
No. (#)	NUMBER
N.S.	NEAR SIDE
N.T.S.	NOT TO SCALE
O.C.	ON CENTER
O.D.	OUTSIDE DIAMETER
O.H.	OPPOSITE HAND
OPNG	OPENING
OPP	OPPOSITE
PC	PIECE
P/C	PRECAST
P.C.C.	PRECAST CONCRETE
PL P.L.	PLATE
(℗)	PROPERTY LINE
PLYWD	PLYWOOD
P.L.F.	POUNDS PER LINEAR FOOT
PNL	PANEL(S)
P/S	PRESTRESS(ED)
P.S.F.	POUNDS PER SQUARE FOOT
P.S.I.	POUNDS PER SQUARE INCH
P.T.	PRESSURE TREATED
R	RADIUS
R.B.S.	REDUCED BEAM SECTION
R.C.P.	REINF CONC PIPE
REF	REFERENCE
REINF	REINFORCE(ING)(MENT)
REQD	REQUIRED
RF	ROOF
R.W.	RETAINING WALL
RWD	REDWOOD
S.C.	SHEAR CONNECTOR
S.CRIT.	SLIP CRITICAL
SCHED	SCHEDULE(D)
SECT	SECTION
SHT	SHEET
SHTG	SHEATHING
SIM	SIMILAR
S.M.S.	SHEET METAL SCREW
S.O.G.	SLAB ON GRADE
SPCG	SPACING
SPEC	SPECIFICATION(S)
SQ	SQUARE
STD	STANDARD
STGR	STAGGER(ED)
STIFF	STIFFEN(ER)
STIR	STIRRUP(S)
STL	STEEL
STRUCT	STRUCTURAL
SYMM	SYMMETRICAL
T	TOP
T&B	TOP & BOTTOM
T&G	TONGUE & GROOVE
T.C.	TOP OF CURB
T.G.	TAPERED GIRDER
THK	THICK(NESS)
THRD	THREAD(ED)
T.N.	TOE NAIL(ING)
T.O.	TOP OF
T.O.C.	TOP OF CONCRETE
T.O.F.	TOP OF FOOTING
T.O.P.	TOP OF PARAPET
T.O.S.	TOP OF STEEL
TOT	TOTAL
T.O.W.	TOP OF WALL
TRANS	TRANSVERSE
T.S.G.	TAPERED STEEL GIRDER
TYP	TYPICAL
U.B.C.	UNIFORM BUILDING CODE
UNBLKD	UNBLOCKED
U.O.N.	UNLESS OTHERWISE NOTED
VERT(V)	VERTICAL
W	WIDTH(WIDE)
W/	WITH
WD	WOOD
W.H.S.	WELDED HEADED STUD
W/O	WITHOUT
W.P.	WORK POINT
WT	WEIGHT
W.T.S.	WELDED THREADED STUD
W.W.F.	WELDED WIRE FABRIC
X-STG	EXTRA STRONG
XX-STG	DOUBLE EXTRA STRONG
YD	YARD

S-3

SPEC. NO. 6147

MARTIN & LIBBY
STRUCTURAL ENGINEERS
4452 Glacier Avenue, San Diego, CA 92120
Ph (619) 280-9307 F (619) 284-3553

REGISTERED PROFESSIONAL ENGINEER
JEAN M. LIBBY
Exp. 03-31-15
CIVIL
STATE OF CALIFORNIA

PLANS FOR THE CONSTRUCTION OF
South Mission Beach Lifeguard Station

Sheet Pile Plan, General Notes & Abbreviations | S1.3

CITY OF SAN DIEGO, CALIFORNIA
ENGINEERING & CAPITAL PROJECTS
ARCHITECTURAL ENGINEERING & CONTRACTS DIVISION
SHEET 50 OF 84 SHEETS

WBS S-00791

APPROVED: 10/13/2014
FOR CITY ENGINEER DATE

SUBMITTED BY: JIHAD SLEMAN
PROJECT MANAGER

DESCRIPTION	BY	APPROVED	DATE	FILMED
ORIGINAL	WH/TT			

YOUSIF BENYAMIN
PROJECT ENGINEER
218-1693
CCS27 COORDINATES
1858-6253
CCS83 COORDINATES

CONTRACTOR ____ DATE STARTED ____
INSPECTOR ____ DATE COMPLETED ____

32849-50-D

TABLE 1 – PRIMARY REINFORCEMENT		
BAR BEND	BAR SIZE	MIN BEND DIA *
ALL GRADES OF REINFORCEMENT	#3 THRU #8	6 BAR DIA
	#9, #10 & #11	8 BAR DIA
	#14 & #18	10 BAR DIA

TABLE 2 – STIRRUP & TIE REINFORCEMENT	
BAR SIZE	MIN BEND DIA *
#3 THRU #5	4 BAR DIA
ALL OTHER BARS	SEE TABLE 1

NOTES:
* MEASURED ON INSIDE OF BAR
1. ALL REINFORCEMENT BENT COLD.
2. FIELD BENDING NOT PERMITTED U.O.N.

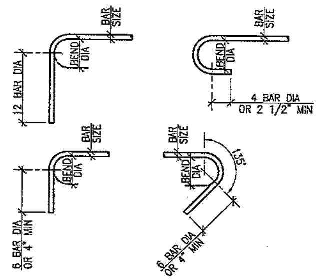

REINFORCEMENT HOOKS
SCALE: NONE
(1)

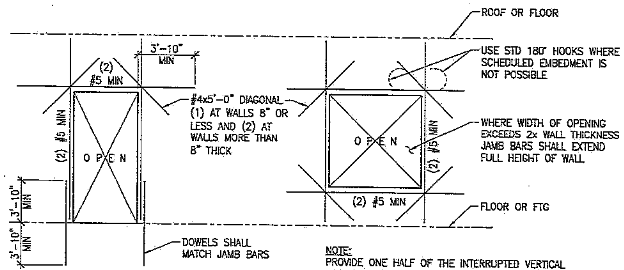

NOTE:
PROVIDE ONE HALF OF THE INTERRUPTED VERTICAL AND HORIZONTAL STEEL EACH SIDE OF OPENING.

OPENINGS IN CONCRETE WALLS
SCALE: NONE
(2)

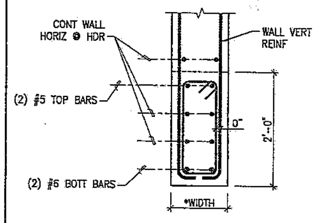

* WIDTH TO MATCH WALL THICKNESS

TYPICAL CONC HEADER (L = 6'-0" MAX)
SCALE: 1" = 1'-0"
(12)

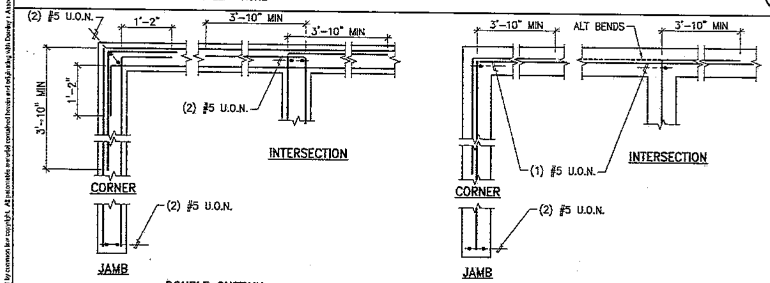

CONCRETE WALL INTERSECTIONS
SCALE: 3/4" = 1'-0"
(3)

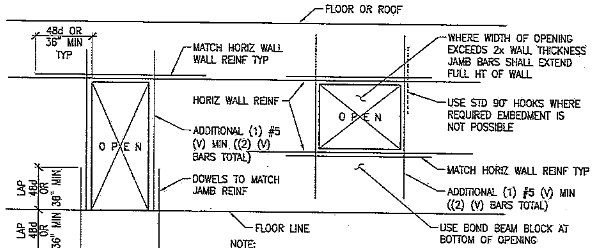

NOTE:
PROVIDE ONE-HALF OF INTERRUPTED VERTICAL AND HORIZONTAL STEEL ((1) #5 MIN) EA SIDE OF OPENING.

OPENINGS IN CMU WALLS
SCALE: NONE
(4)

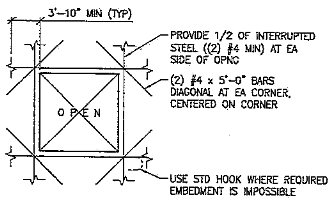

NOTES:
1. THIS DETAIL IS APPLICABLE AT OPENINGS WHERE ANY SIDE IS GREATER THAN 1'-0".
2. FOR OPENINGS SMALLER THAN 1'-0", BEND ALL REINF AROUND OPENING.

REINF AT CONC SLAB OPENINGS
SCALE: NONE
(5)

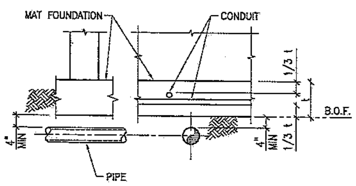

PIPES & CONDUITS AT MAT FOUNDATION
SCALE: 1/2" = 1'-0"
(6)

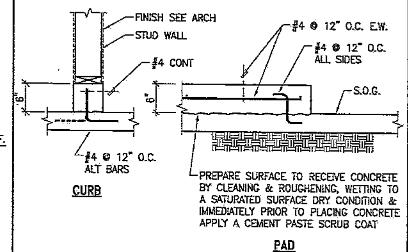

TYPICAL HOUSEKEEPING PAD/CURB
SCALE: 1" = 1'-0"
(7)

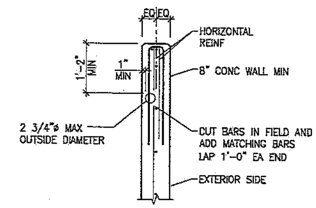

PLAN VIEW PIPES IN CONC WALL
SCALE: 3/4" = 1'-0"
(8)

REINFORCEMENT LAP SPLICE AND EMBEDMENT LENGTH							
BAR SIZE	CLASS A ** MIN LAP LENGTH (IN)		CLASS B ** MIN LAP LENGTH (IN)		** MIN EMBED LENGTH (IN)		
					STRAIGHT BARS		W/STD HOOK
	TOP BARS	OTHER BARS	TOP BARS	OTHER BARS	TOP BARS	OTHER BARS	
#3	24	21	31	27	24	21	6
#4	32	28	41	37	32	28	8
#5	40	35	52	46	40	35	14
#6	48	42	62	55	48	42	17
#7	69	61	90	79	69	61	20
#8	79	70	103	91	79	70	23
#9	89	79	115	102	89	79	25
#10	99	89	128	113	99	87	28
#11	109	95	141	125	108	96	31

fc = 4,200 P.S.I. Fy = 60,000 P.S.I.

** FOR BAR CLEAR SPACING LESS THAN 2 BAR DIAMETERS, ADD 50%.

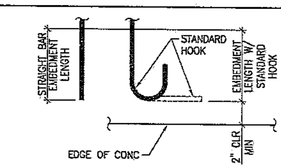

NOTES:
1. MIN LAP ALL BARS CLASS 'B' UNLESS OTHERWISE NOTED.
2. STAGGER LAP OF HORIZONTAL WALL BARS.
3. TOP BARS ARE HORIZONTAL BARS W/MORE THAN 12" DEPTH OF CONCRETE CAST BELOW THE REINFORCEMENT. MULTIPLE HORIZONTAL BARS IN A SINGLE VERTICAL PLAN SUCH AS COLUMN TIES OR HORIZONTAL BARS IN WALLS ARE NOT TOP BARS.

EPOXY COATED REBAR SPLICE (CLASS A & B) & EMBEDMENT
SCALE: NONE
(9)

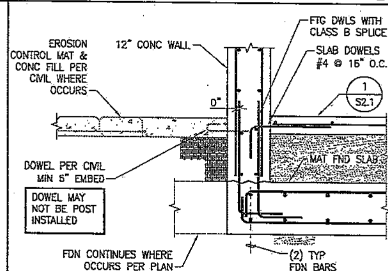

TYP 12" WALL
SCALE: 3/4" = 1'-0"
(10)

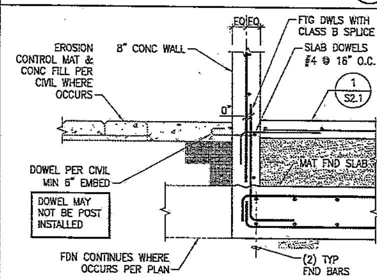

TYP 8" WALL
SCALE: 3/4" = 1'-0"
(11)

S-4

SPEC. NO. 5147

MARTIN & LIBBY
STRUCTURAL ENGINEERS
4452 Glacier Avenue, San Diego, CA 92120
Ph (619) 280-8307 F (619) 284-3533

PLANS FOR THE CONSTRUCTION OF
South Mission Beach Lifeguard Station

Typical Details S1.4

CITY OF SAN DIEGO, CALIFORNIA
ENGINEERING & CAPITAL PROJECTS
ARCHITECTURAL ENGINEERING & CONTRACTS DIVISION
SHEET 51 OF 94 SHEETS

WBS S-00791

10/13/2014

FOR CITY ENGINEER — DATE

SUBMITTED BY: JIHAD SLEIMAN, PROJECT MANAGER

YOUSIF BENYAMIN, PROJECT ENGINEER

218-1693 CCS27 COORDINATES

1838-6253 CCS83 COORDINATES

DESCRIPTION	BY	APPROVED	DATE	FILMED
ORIGINAL	Wt/T			

CONTRACTOR ______ DATE STARTED ______
INSPECTOR ______ DATE COMPLETED ______

32849-51-D

© COPYRIGHT October 09, 2014 at 10:21AM

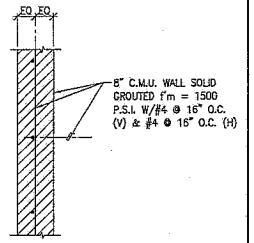

TYPICAL C.M.U. WALL
SCALE: 1" = 1'-0" (1)

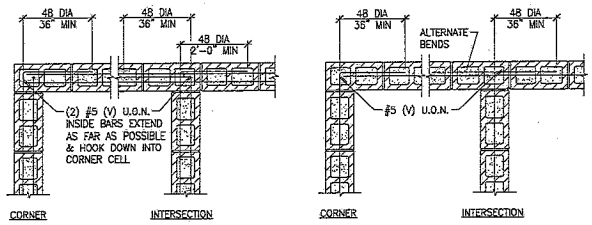

DOUBLE CURTAIN SINGLE CURTAIN

CMU WALL INTERSECTIONS
SCALE: NONE (2)

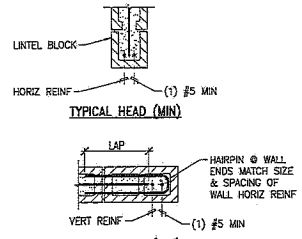

CMU WALL HEAD & JAMB REINFORCEMENT
SCALE: NONE (3)

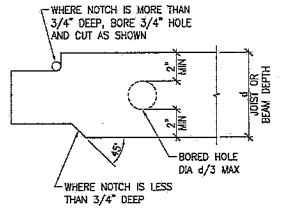

NOTES:
1. MAXIMUM DEPTH OF NOTCH @ ENDS OF MEMBER = d/4.
2. MAXIMUM DEPTH OF NOTCH IN SPAN LENGTH = d/6.
3. NOTCHING IN MIDDLE 1/3 OF SPAN NOT ALLOWED.

JOIST OR BEAM NOTCH
SCALE: NONE (4)

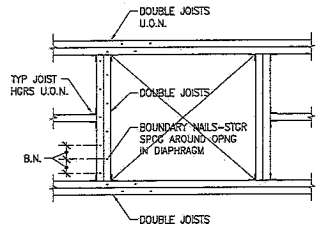

ROOF FRAMING @ OPENINGS
SCALE: NONE (5)

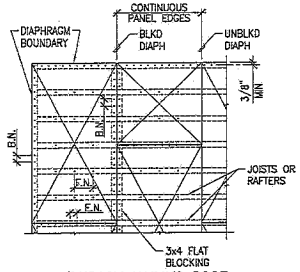

DIAPHRAGM NAILING ROOF
SCALE: NONE (6)

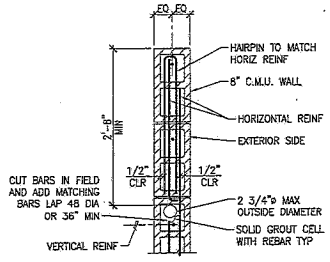

PLAN VIEW PIPES IN C.M.U. WALL
SCALE: 1" = 1'-0" (7)

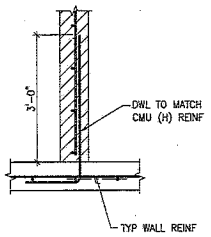

PLAN
SCALE: 3/4" = 1'-0" (8)

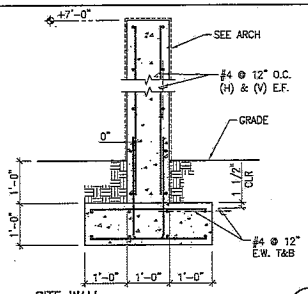

SITE WALL
SCALE: 3/4" = 1'-0" (9)

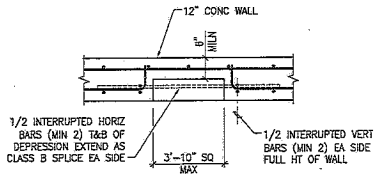

PLAN

NOTE: REINF AS AN OPENING IN CONC WALL.

DEPRESSED WALL AT SIGNAGE
SCALE: 3/4" = 1'-0" (10)

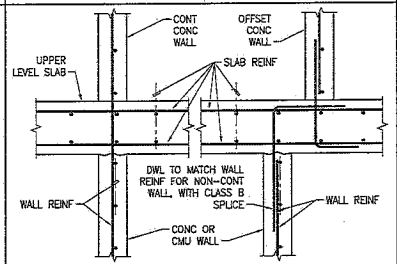

WALL/SLAB INTERSECTIONS
SCALE: 3/4" = 1'-0" (11)

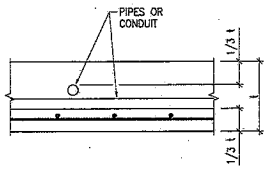

PIPES/CONDUITS IN SUPPORTED SLAB
SCALE: 1" = 1'-0" (12)

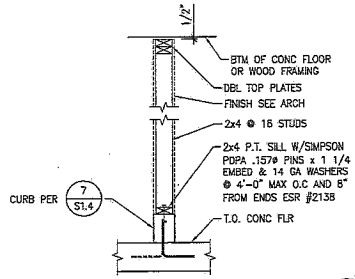

NON-BRG WOOD STUD WALL
SCALE: 1" = 1'-0" (13)

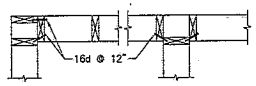

NON-SHEAR WALL

STUD WALL INTERSECTIONS
SCALE: NONE (14)

CEILING JOIST SCHEDULE			
SPAN	SIZE	HANGER	LEDGER NAILING
≤ 7'-6"	2x4 @ 16" O.C.	LU24	(2) 16d PER STUD
7'-6" < x ≤ 11'-3"	2x6 @ 16" O.C.	LU26	(2) 16d PER STUD

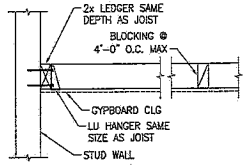

NOTE: CEILING JOIST SCHEDULE IS TYPICAL U.O.N. ON PLANS.

CEILING JOIST
SCALE: NONE (15)

S-5

MARTIN & LIBBY
STRUCTURAL ENGINEERS
4452 Decatur Avenue, San Diego, CA 92120
Ph (619) 280-9307 F (619) 284-3533

SPEC. NO. 8147

PLANS FOR THE CONSTRUCTION OF
South Mission Beach Lifeguard Station

Typical Details S1.5

CITY OF SAN DIEGO, CALIFORNIA
ENGINEERING & CAPITAL PROJECTS
ARCHITECTURAL ENGINEERING & CONTRACTS DIVISION
SHEET ___ OF ___ SHEETS

APPROVED _____ 10/13/2014
FOR CITY ENGINEER DATE

DESCRIPTION	BY	APPROVED	DATE	FILMED
ORIGINAL	WS/TT			

CONTRACTOR _____ DATE STARTED _____
INSPECTOR _____ DATE COMPLETED _____

WBS S-00791
SUBMITTED BY: DAVID SCHWIN PROJECT MANAGER
YOUSIF BENYAMIN PROJECT ENGINEER
219-1683
COGO7 COORDINATES
1858-6253
COG83 COORDINATES
32849-52-D

Proprietary Analysis. These drawings and designs are restricted by common law copyright. All materials provided construction use only shall be returned upon demand by Owner. Associates Architects @ Generation LLP shall be the property of Owner. Associates Architects @ Generation LLP

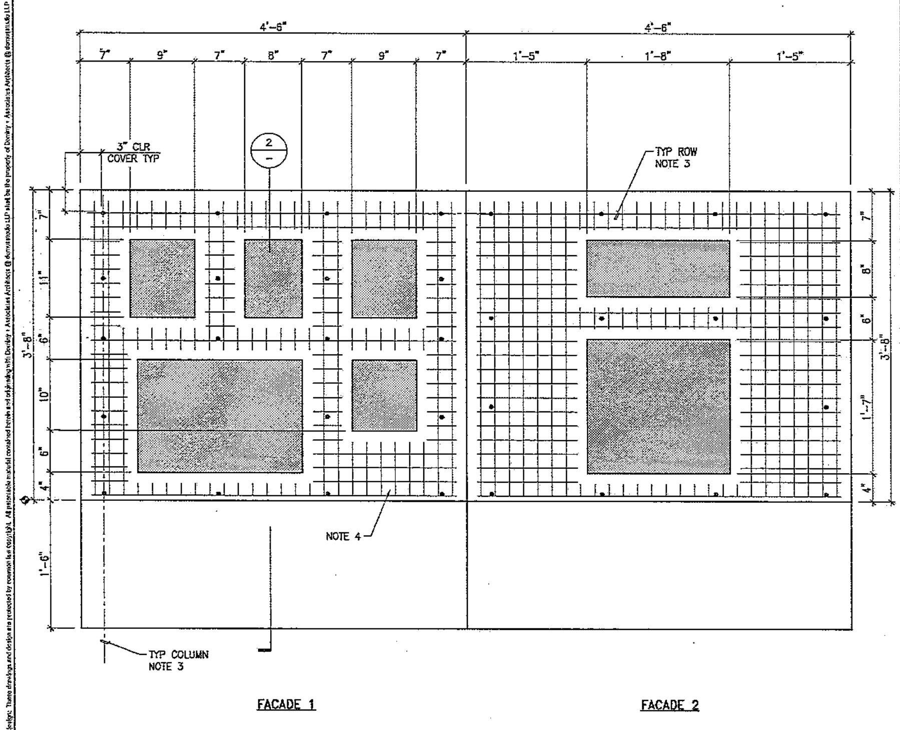

NOTES:
1. CITY WALL TO BE CAST FACE DOWN IN 4'-6" LENGTHS. WHEN CONCRETE HAS REACHED 75% f'c MIN, CLEAN AND ROUGHEN BACK, LIFT INTO PLACE AND USE AS FORM FOR CONCRETE SHEET PILE CAP.
2. FACADE ELEVATIONS VARY, SEE ARCHITECTURAL FOR FACADES 1 THRU 5.
3. CENTER HOOK BETWEEN 7" & 8" WIDE ROWS AND COLUMNS W/A MIN CLEAR COVER OF 3".
4. MEDIUM SANDBLAST ALL FINISHED CONCRETE PER ARCHITECT.

CITY WALL ELEVATION
SCALE: 1 1/2" = 1'-0" (1)

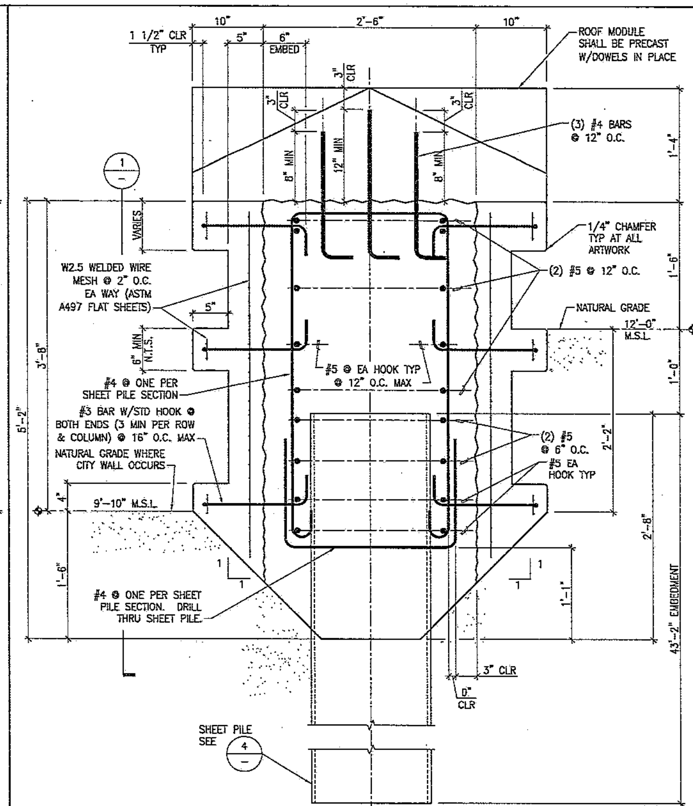

NOTE:
1. TAPER NATURAL GRADE ON OCEAN SIDE BETWEEN CITY WALL AND SEAT WALL.
2. FOR SHEET PILE PLAN SEE A/S1.3.
3. IF REFUSAL IS MET BEFORE REQUIRED EMBEDMENT DEPTH CONSULT RESIDENT ENGINEER, STRUCTURAL ENGINEER AND GEOTECHNICAL ENGINEER, DO NOT CUT OFF SHEET PILE.
4. PRECAST ROOF MODULE SHALL BE LIFTED INTO PLACE WHILE SHEET PILE CAP IS NEWLY PLACED. NOTE THAT POST INSTALLED EPOXY DOWELS WILL NOT BE PERMITTED.

CITY WALL SECTION
SCALE: 1 1/2" = 1'-0" (2)

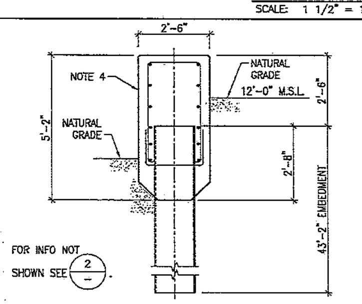

SEAT WALL SECTION
SCALE: 1/2" = 1'-0" (3)

SECTION	WIDTH B (IN)	HEIGHT H (IN)	THICKNESS E (IN)	THICKNESS A (IN)
AZ-28-700	27.56	18.15	0.52	0.52

PILE WEIGHT LB/FT	SECTION MODULUS IN³/FT	MOMENT OF INERTIA IN⁴/FT
73.93	51.3	465.9

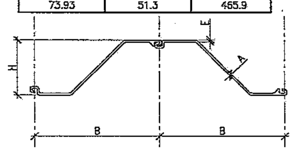

SHEET PILE
SCALE: 1" = 1'-0" (4)

S-6

SPEC. NO. 8147

MARTIN & LIBBY
STRUCTURAL ENGINEERS
4452 Glacier Avenue, San Diego, CA 92120
Ph (619) 280-9307 F (619) 284-3533

PLANS FOR THE CONSTRUCTION OF
South Mission Beach Lifeguard Station

City Wall Details S1.6

CITY OF SAN DIEGO, CALIFORNIA
ENGINEERING & CAPITAL PROJECTS
ARCHITECTURAL ENGINEERING & CONTRACTS DIVISION
SHEET 53 OF 94 SHEETS

WBS S-00791

FOR CITY ENGINEER — DATE 10/13/2014
SUBMITTED BY: JIHAD SLEIMAN, PROJECT MANAGER
TOUSIF BENYAMIN, PROJECT ENGINEER
218-1683 CCS27 COORDINATE
1858-6253 CCS83 COORDINATE
CONTRACTOR / INSPECTOR / DATE STARTED / DATE COMPLETED
32849-53-D

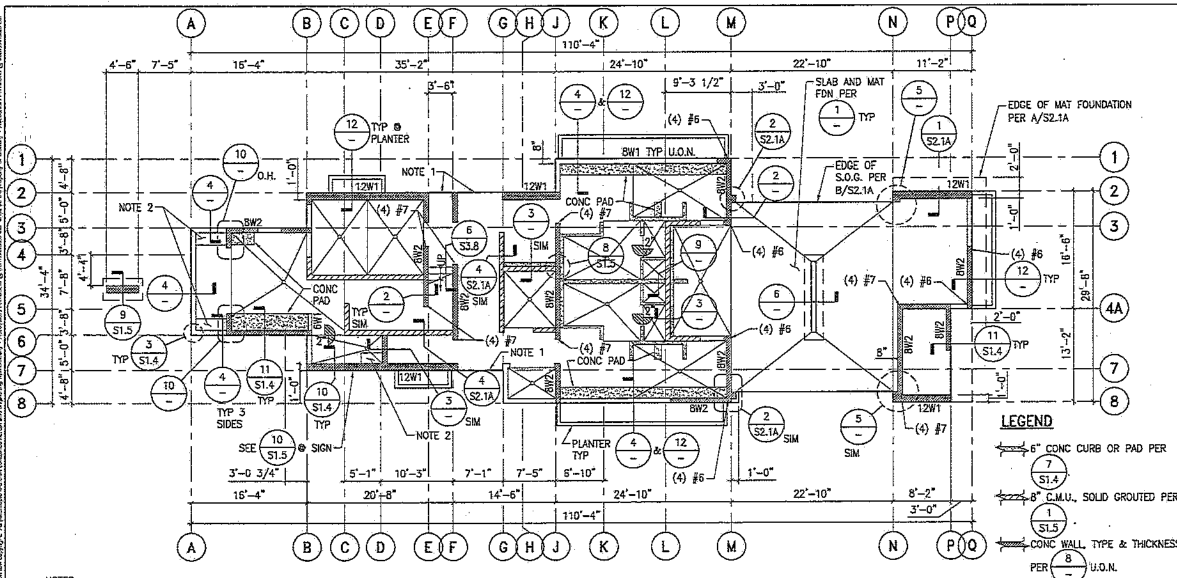

NOTES:
1. COORDINATE DOOR ROUGH OPENING WITH ARCHITECT.
2. CONCRETE BENCH PER ARCHITECT.

FIRST LEVEL FLOOR FRAMING & FOUNDATION PLAN (A)
SCALE: 1/8" = 1'-0"

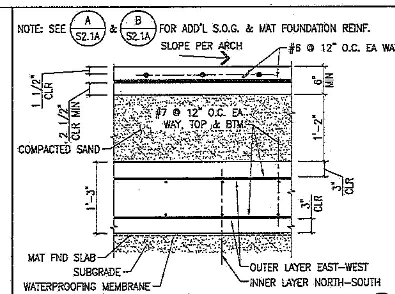

TYPICAL MAT FOUNDATION AND SLAB (1)
SCALE: 1" = 1'-0"

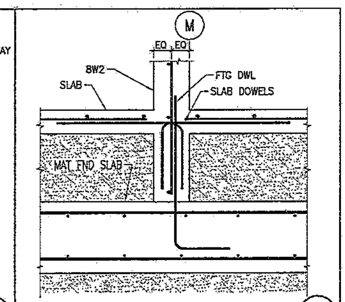

(2)
SCALE: 1" = 1'-0"

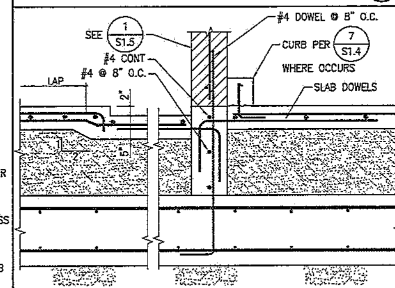

DEPRESSED SLAB (3)
SCALE: 1" = 1'-0"

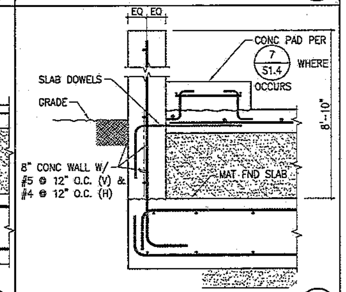

(4)
SCALE: 1" = 1'-0"

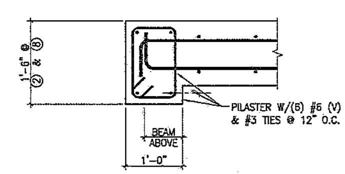

PLAN VIEW (5)
SCALE: 1" = 1'-0"

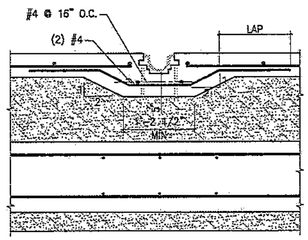

(6)
SCALE: 1" = 1'-0"

WALL SCHEDULE

MARK	THICKNESS (")	WALL REINFORCING VERTICAL	WALL REINFORCING HORIZONTAL
6W1	6	#4 @ 12 @ ℄	#4 @ 12
8W1	8	#5 @ 14 @ ℄	#5 @ 14
8W2	8	#5 @ 12 @ ℄	#5 @ 12
8W3	8	#5 @ 10 @ ℄	#4 @ 10
12W1	12	#5 @ 14 E.F.	#5 @ 14 E.F.

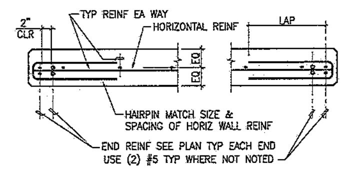

PLAN - SPECIAL WALL REINF SCHEDULE (8)
SCALE: 1" = 1'-0"

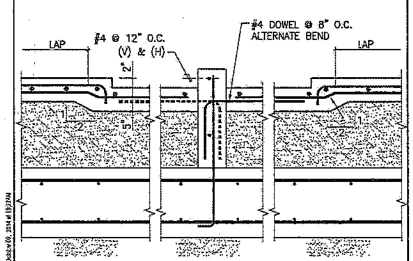

DEPRESSED SLAB AT SHOWERS (9)
SCALE: 1" = 1'-0"

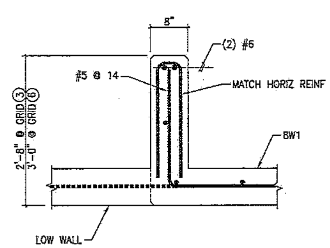

PLAN (10)
SCALE: 1" = 1'-0"

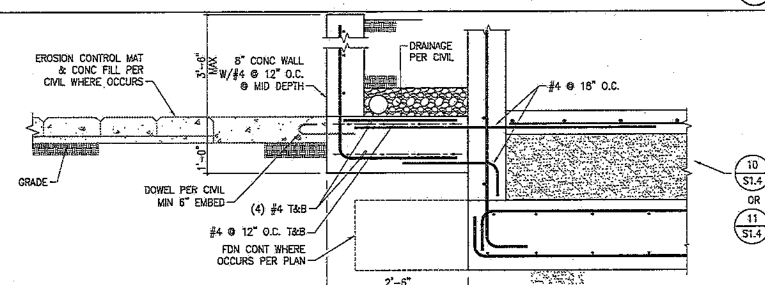

PLANTER WALL (12)
SCALE: 1" = 1'-0"

S-7

SPEC. NO. 8147

MARTIN & LIBBY
STRUCTURAL ENGINEERS
4452 Glacier Avenue, San Diego, CA 92120
Ph (619) 280-9307 F (619) 284-3533

PLANS FOR THE CONSTRUCTION OF
South Mission Beach Lifeguard Station

Mat Foundation Plan | S2.1

CITY OF SAN DIEGO, CALIFORNIA
ENGINEERING & CAPITAL PROJECTS
ARCHITECTURAL ENGINEERING & CONTRACTS DIVISION
SHEET 54 OF 94 SHEETS

WBS S-00791

FOR CITY ENGINEER 10/13/2014 DATE

SUBMITTED BY: JIHAD SLEIMAN, PROJECT MANAGER
YOUSIF BENYAMIN, PROJECT ENGINEER

ORIGINAL

32849-54-D

© COPYRIGHT October 09, 2014 Proprietary designs: These drawings and designs are protected by copyright. All reproduction rights reserved.

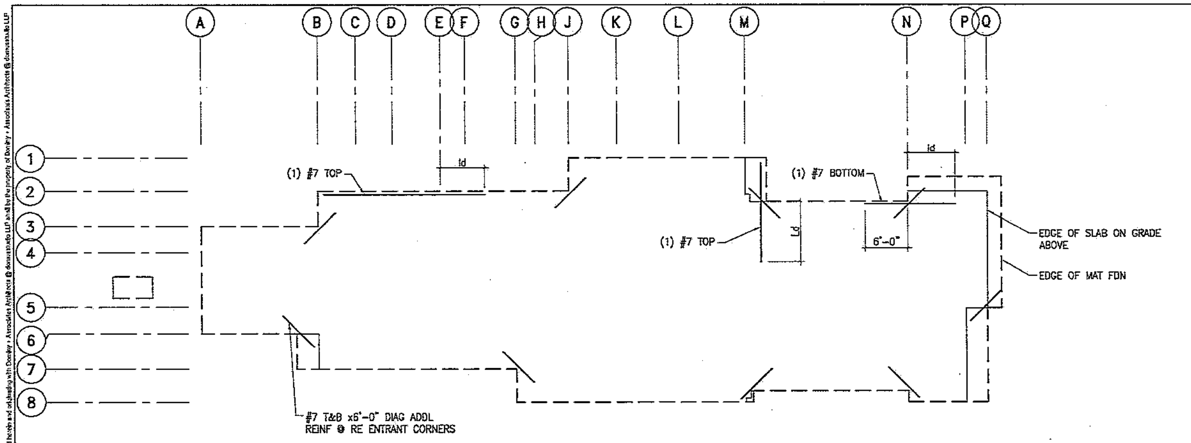

NOTES:

1. REINF SHOWN IN ADDITION TO TYP MAT FOUNDATION REINF PER 1/S2.1.
2. NO CONSTRUCTION JOINTS ALLOWED IN MAT FOUNDATION.
3. USE STD 180° HOOKS WHERE EMBEDMENT IS NOT POSSIBLE. SEE 2/S21.4.

MAT FOUNDATION ADDITIONAL REINF PLAN (A)

SCALE: 1/8" = 1'-0"

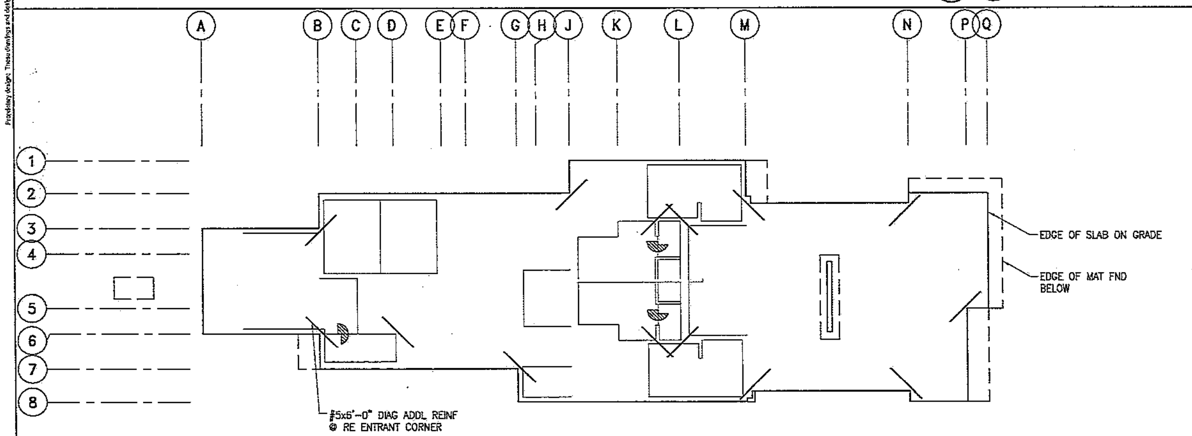

NOTES:

1. TYP S.O.G. REINF PER 1/S2.1.
2. CONCRETE PADS NOT SHOWN FOR CLARITY.
3. NO CONSTRUCTION JOINTS ON SLAB ON GRADE.
4. USE STD 180° HOOKS WHERE EMBEDMENT IS NOT POSSIBLE. SEE 2/S21.4.

SLAB ON GRADE PLAN (B)

SCALE: 1/8" = 1'-0"

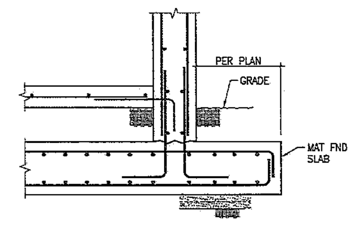

SCALE: 3/4" = 1'-0" (1)

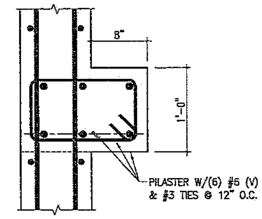

SCALE: 1 1/2" = 1'-0" (2)

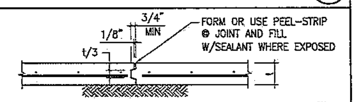

NOTES:
1. ADJACENT POURS MUST BE MADE AT LEAST 8 HOURS APART.
2. INTERRUPT ALL REINF AT JOINT.
3. CONTRACTOR MAY USE EITHER OF THESE DETAILS, U.O.N.

CONSTRUCTION JOINT (C.J.)

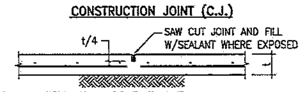

NOTES:
1. INTERRUPT ALL REINF AT JOINT.
2. JOINTS TO BE SAWCUT NOT LATER THAN 12 HOURS AFTER CASTING.
3. CONTRACTOR MAY USE EITHER OF THESE DETAILS, U.O.N.

WEAKENED PLANE JOINT (W.P.J.)

JOINTS IN CONC S.O.G. (3)

SCALE: NONE

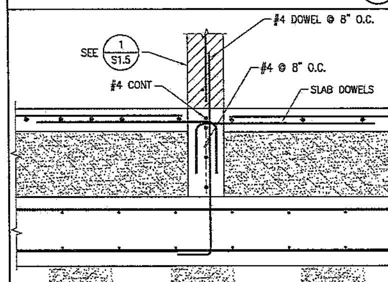

TYP SLAB @ CMU WALL (4)

SCALE: 1" = 1'-0"

S-8

SPEC. NO. 5147

MARTIN & LIBBY
STRUCTURAL ENGINEERS
4452 Glacier Avenue, San Diego, CA 92120
Ph (619) 280-5307 F (619) 284-3553

REGISTERED PROFESSIONAL ENGINEER JEAN M. LIBBY Exp. 03-31-13 CIVIL STATE OF CALIFORNIA

PLANS FOR THE CONSTRUCTION OF
South Mission Beach Lifeguard Station

Mat Foundation Additional Reinforcing Plan and Details | S2.1A

CITY OF SAN DIEGO, CALIFORNIA
ENGINEERING & CAPITAL PROJECTS
ARCHITECTURAL ENGINEERING & CONTRACTS DIVISION
SHEET 55 OF 84 SHEETS

WBS S-00791

APPROVED: ______ FOR CITY ENGINEER — 10/13/2014 DATE

SUBMITTED BY: JIHAD SLEIMAN PROJECT MANAGER

DESCRIPTION	BY	APPROVED	DATE	FILMED
ORIGINAL	WH/TT			

YOUSIF BENYAMIN PROJECT ENGINEER

218-1693 CCS27 COORDINATES

1868-6253 CCS83 COORDINATES

CONTRACTOR ______ DATE STARTED ______
INSPECTOR ______ DATE COMPLETED ______

32849-55-D

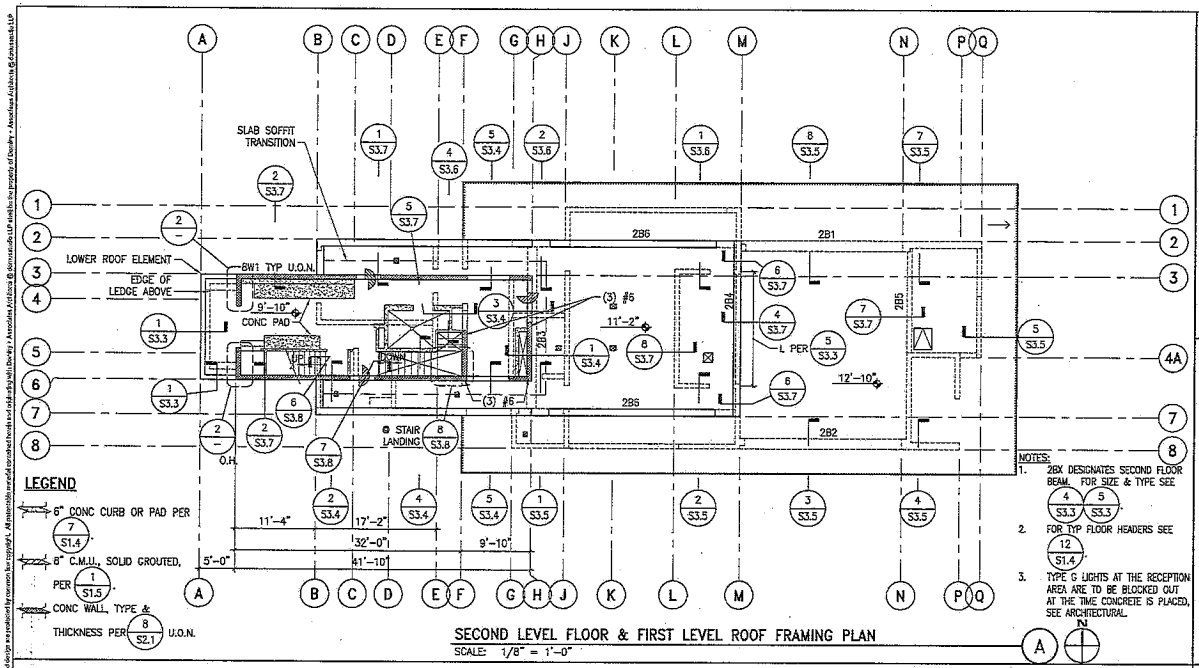

NOTES:
1. 2BX DESIGNATES SECOND FLOOR BEAM. FOR SIZE & TYPE SEE 4/S3.3 5/S3.3
2. FOR TYP FLOOR HEADERS SEE 12/S1.4
3. TYPE G LIGHTS AT THE RECEPTION AREA ARE TO BE BLOCKED OUT AT THE TIME CONCRETE IS PLACED, SEE ARCHITECTURAL.

SECOND LEVEL FLOOR & FIRST LEVEL ROOF FRAMING PLAN
SCALE: 1/8" = 1'-0"
A

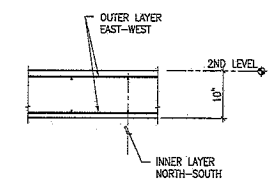

TYPICAL REINF PLACEMENT 2ND LEVEL
SCALE: 1" = 1'-0"
1

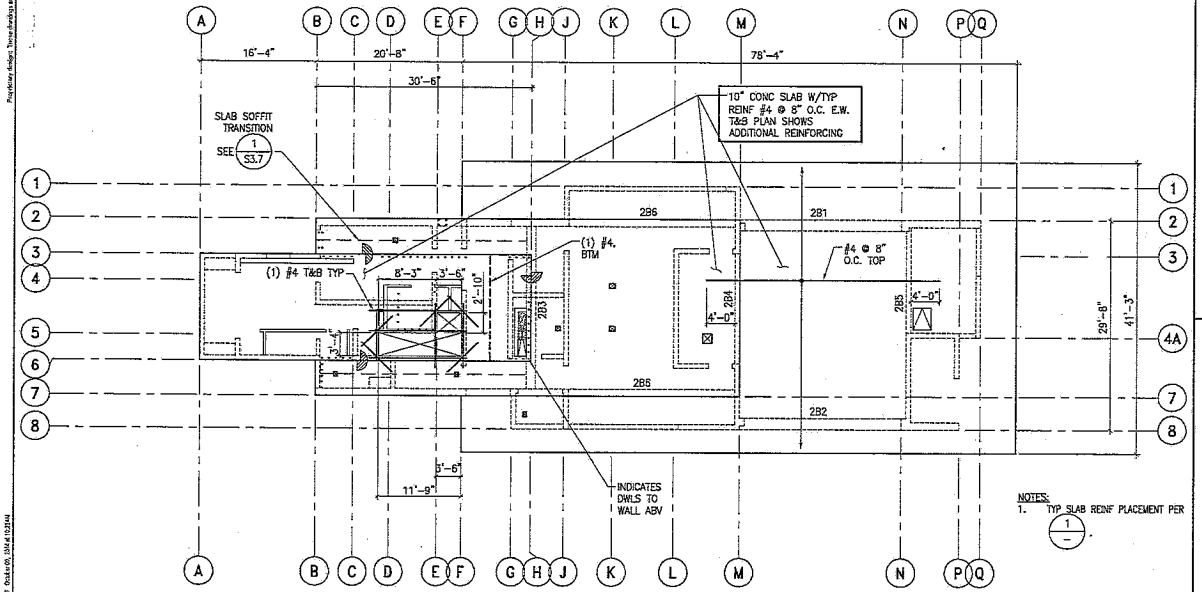

NOTES:
1. TYP SLAB REINF PLACEMENT PER 1/-

SECOND LEVEL FLOOR & FIRST LEVEL ROOF SLAB PLAN
SCALE: 1/8" = 1'-0"
B

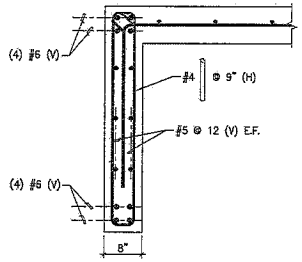

PLAN VIEW
SCALE: 1" = 1'-0"
2

S-9

SPEC. NO. 8147

MARTIN & LIBBY
STRUCTURAL ENGINEERS
4452 Glacier Avenue, San Diego, CA 92120
Ph (619) 280-9307 F (619) 284-3533

PLANS FOR THE CONSTRUCTION OF
South Mission Beach Lifeguard Station

Second Floor Framing Plan & Second Floor Slab Plan | S2.2

CITY OF SAN DIEGO, CALIFORNIA
ENGINEERING & CAPITAL PROJECTS
ARCHITECTURAL ENGINEERING & CONTRACTS DIVISION
SHEET 56 OF 84 SHEETS

WBS S-00791

APPROVED: 10/13/2014
FOR CITY ENGINEER — DATE

SUBMITTED BY: JHAO SLEMAN, PROJECT MANAGER

DESCRIPTION	BY	APPROVED	DATE	FILMED
ORIGINAL	WH/TT			

YOUSIF BENYAMIN, PROJECT ENGINEER
218-1693
CSS27 COORDINATES
1858-6253
CSS83 COORDINATES

CONTRACTOR _____ DATE STARTED _____
INSPECTOR _____ DATE COMPLETED _____

32849-56-D

Proprietary design. These drawings and design are protected by copyright. All reasonable means of construction is not a dedicating with Dewitt + Associates Architects @ donnesmith LLP shall be the property of Dewitt + Associates Architects @ donnesmith LLP
© COPYRIGHT Oct 09, 2014 at 10:24 AM

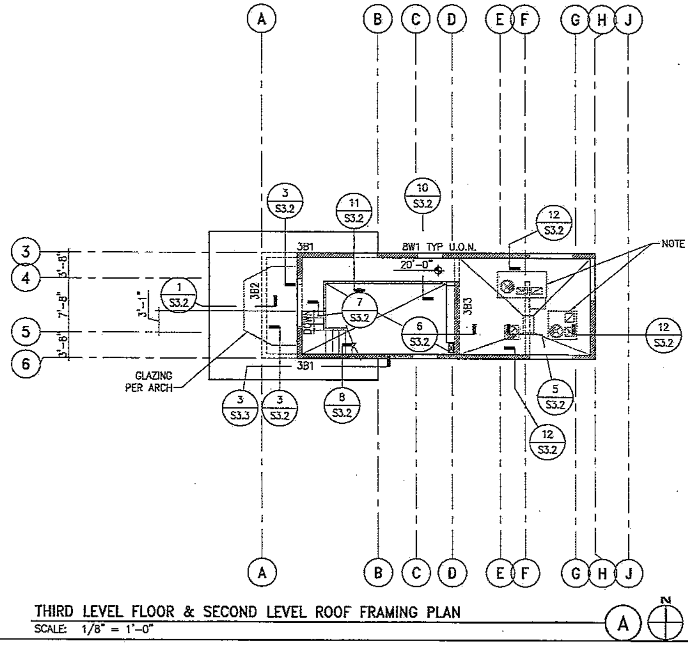

THIRD LEVEL FLOOR & SECOND LEVEL ROOF FRAMING PLAN

SCALE: 1/8" = 1'-0"

A

LEGEND

6" CONC CURB PER 7/S1.4.

CONC WALL, TYPE & THICKNESS PER 8/S2.1 U.O.N.

NOTES:

1. FOR TYP FLOOR HEADERS SEE 12/S1.4.
2. TYPE G LIGHTS AT THE OBSERVATION AREA ARE TO BE BLOCKED OUT AT THE TIME CONCRETE IS PLACED, SEE ARCHITECTURAL.
3. UNITS MOUNTED ON ROOF CURBS PER MECHANICAL.

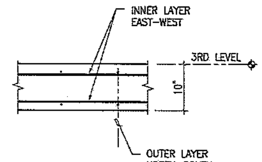

TYPICAL REINF PLACEMENT 3RD LEVEL

SCALE: 1" = 1'-0"

1

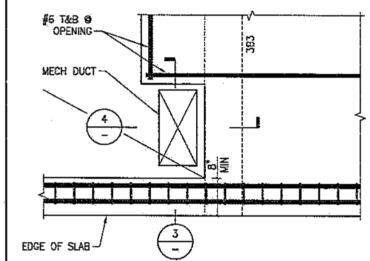

PLAN VIEW AT MECH OPNG

SCALE: 1" = 1'-0"

2

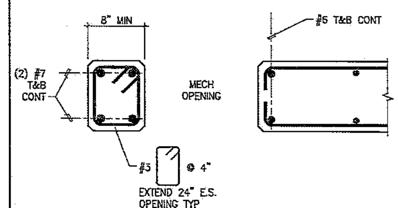

SCALE: 1 1/2" = 1'-0"

3

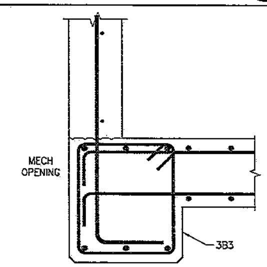

SCALE: 1 1/2" = 1'-0"

4

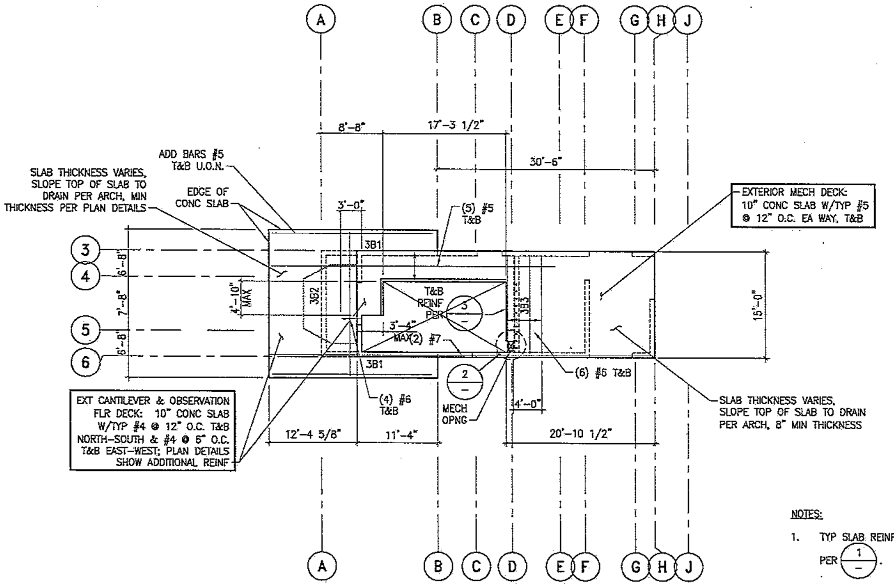

NOTES:

1. TYP SLAB REINF PLACEMENT PER 1/–.

THIRD LEVEL FLOOR & SECOND LEVEL ROOF SLAB PLAN

SCALE: 1/8" = 1'-0"

B

S-10

SPEC. NO. 5147

MARTIN & LIBBY STRUCTURAL ENGINEERS
4452 Glacier Avenue, San Diego, CA 92120
Ph (619) 280-5307 F (619) 284-3533

PLANS FOR THE CONSTRUCTION OF
South Mission Beach Lifeguard Station

Third Floor Framing Plan & Third Floor Slab Plan | S2.3

CITY OF SAN DIEGO, CALIFORNIA
ENGINEERING & CAPITAL PROJECTS
ARCHITECTURAL ENGINEERING & CONTRACTS DIVISION
SHEET 57 OF 84 SHEETS

WBS S-00791

FOR CITY ENGINEER 10/13/2014

SUBMITTED BY: JIHAD SLEIMAN, PROJECT MANAGER

YOUSEF BENYAMIN, PROJECT ENGINEER

DESCRIPTION	BY	APPROVED	DATE	FILMED
ORIGINAL	WH/JT			

218-1663
CCS27 COORDINATE 1858-6253
CCS83 COORDINATE

CONTRACTOR ______ DATE STARTED ______
INSPECTOR ______ DATE COMPLETED ______

32849-57-D

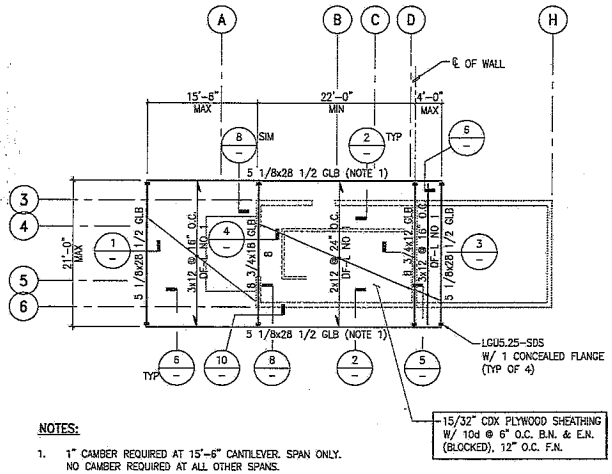

NOTES:

1. 1" CAMBER REQUIRED AT 15'-6" CANTILEVER. SPAN ONLY. NO CAMBER REQUIRED AT ALL OTHER SPANS.

OBSERVATION ROOF FRAMING PLAN A
SCALE: 1/8" = 1'-0"

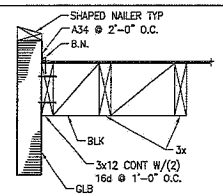

DETAIL 1
SCALE: 1" = 1'-0"

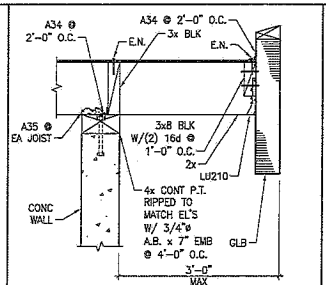

DETAIL 2
SCALE: 1" = 1'-0"

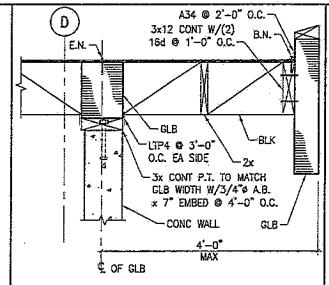

DETAIL 3
SCALE: 1" = 1'-0"

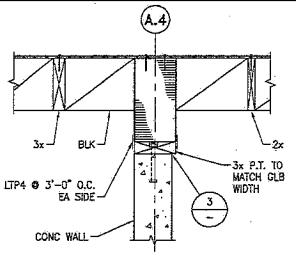

DETAIL 4
SCALE: 1" = 1'-0"

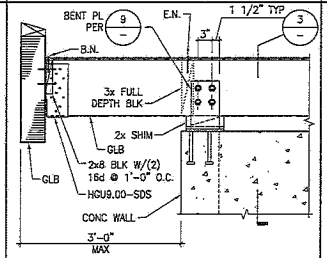

DETAIL 5
SCALE: 1" = 1'-0"

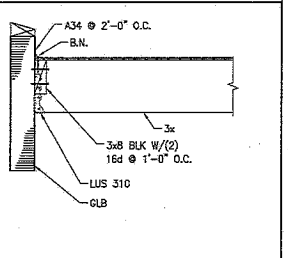

DETAIL 6
SCALE: 1" = 1'-0"

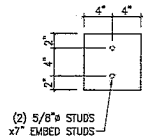

A

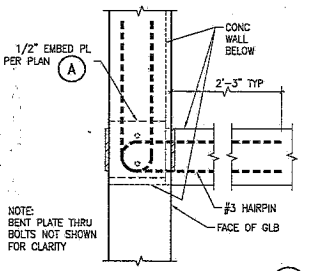

SCALE: 1 1/2" = 1'-0"
7

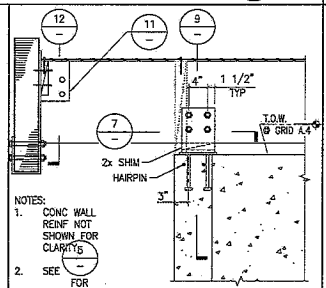

DETAIL
SCALE: 1" = 1'-0"
8

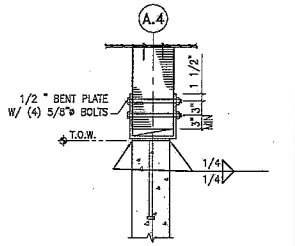

DETAIL
SCALE: 1" = 1'-0"
9

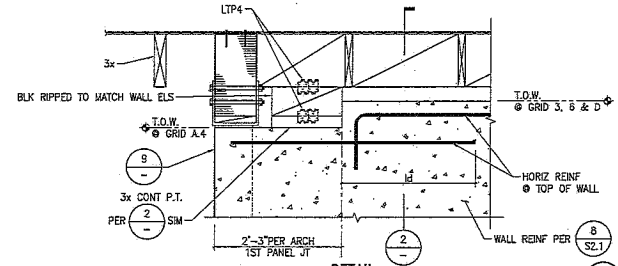

DETAIL
SCALE: 1" = 1'-0"
10

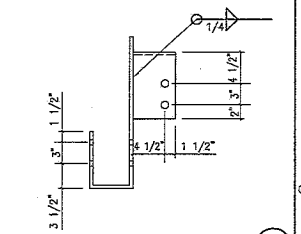

SCALE: 1 1/2" = 1'-0"
11

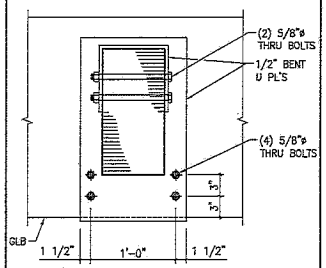

SCALE: 1 1/2" = 1'-0"
12

S-11

MARTIN & LIBBY
STRUCTURAL ENGINEERS
4452 Glacier Avenue, San Diego, CA 92120
Ph (619) 280-9307 F (619) 284-3333

SPEC. NO. 8147

PLANS FOR THE CONSTRUCTION OF
South Mission Beach Lifeguard Station

Observation Roof Framing Plan and Details | S2.4

CITY OF SAN DIEGO, CALIFORNIA
ENGINEERING & CAPITAL PROJECTS
ARCHITECTURAL, ENGINEERING & CONTRACTS DIVISION
SHEET 58 OF 84 SHEETS
FOR CITY ENGINEER — DATE 10/13/2011
WBS S-00791
SUBMITTED BY: JIHAD SLEIMAN, PROJECT MANAGER
YOUSIF BOHSMAN, PROJECT ENGINEER
619-1933
CCDZT COORDINATES
1858-6253
CGDES COORDINATES
32849-58-D

DESCRIPTION	BY	APPROVED	DATE	FILED
ORIGINAL	W/VT			

CONTRACTOR — DATE STARTED
INSPECTOR — DATE COMPLETED

© COPYRIGHT 2014 MARTIN & LIBBY
Preliminary drawings, Tentative drawings and designs are protected by common law copyright. All materials not published or released for construction shall remain the property of Martin + Associates Architects & Associates. It is unlawful to use this property without the written permission of Martin + Associates Architects & Associates.

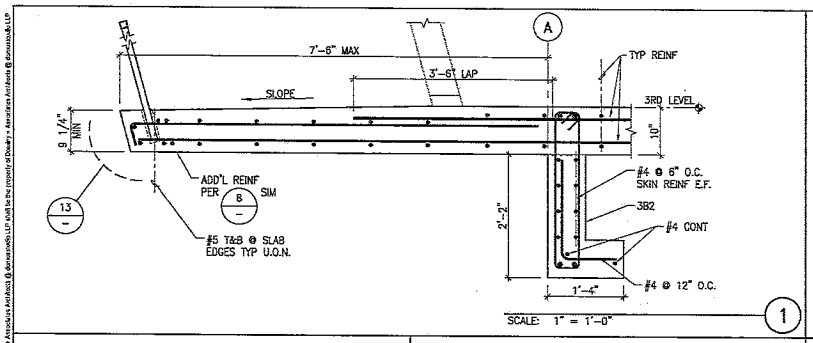

SCALE: 1" = 1'-0" — 1

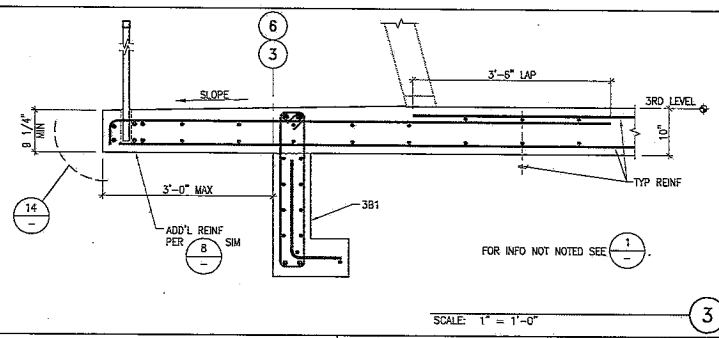

SCALE: 1" = 1'-0" — 3

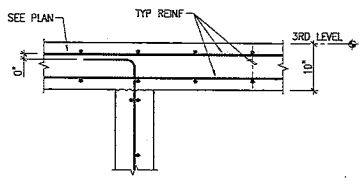

SCALE: 1" = 1'-0" — 5

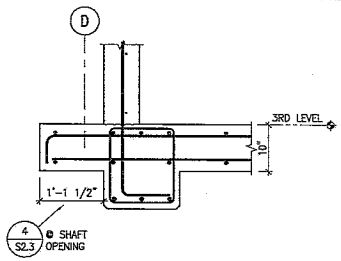

SCALE: 1" = 1'-0" — 6

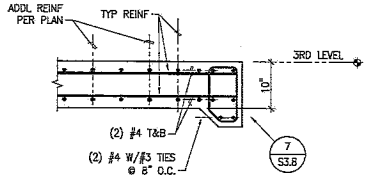

SLAB EDGE @ STAIR LANDING
SCALE: 1" = 1'-0" — 7

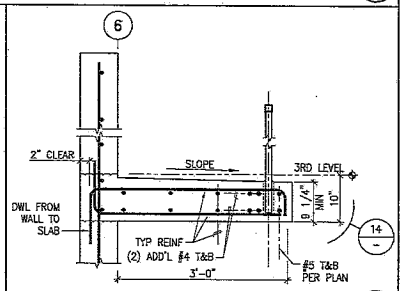

SCALE: 1" = 1'-0" — 8

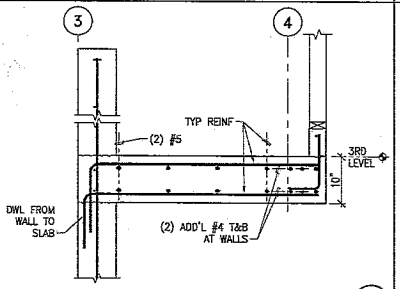

SCALE: 1" = 1'-0" — 10

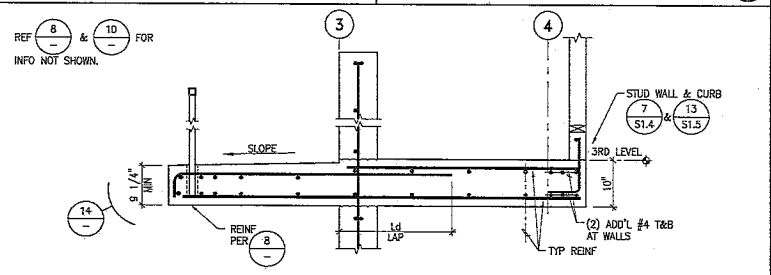

SCALE: 1" = 1'-0" — 11

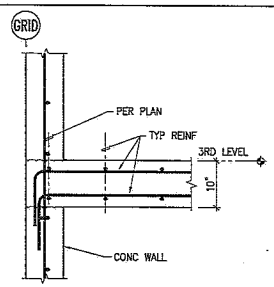

SCALE: 1" = 1'-0" — 12

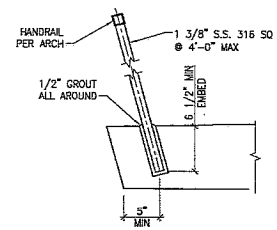

* SLAB REINF NOT SHOWN FOR CLARITY.

SCALE: 1 1/2" = 1'-0" — 13

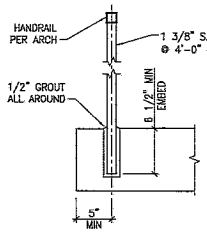

* SLAB REINF NOT SHOWN FOR CLARITY.

SCALE: 1 1/2" = 1'-0" — 14

MARTIN & LIBBY
STRUCTURAL ENGINEERS
4452 Decatur Avenue, San Diego, CA 92120
Ph. (619) 280-6307 F (619) 284-3533

SPEC. NO. 8147

PLANS FOR THE CONSTRUCTION OF
South Mission Beach Lifeguard Station

Third Floor Details — S3.2

CITY OF SAN DIEGO, CALIFORNIA
ENGINEERING & CAPITAL PROJECTS
ARCHITECTURAL ENGINEERING & CONTRACTS DIVISION
SHEET 52 OF 84 SHEETS

WBS S-00791

FOR CITY ENGINEER — DATE 10/13/2014

SUBMITTED BY: JRAD SLEIMAN, PROJECT MANAGER

DESCRIPTION	BY	APPROVED	DATE	FILMED
ORIGINAL	WH/YS			

YOUSIF BEHNAM, PROJECT ENGINEER
619-1583
COORDINATES
1530-6253
COORDINATES

CONTRACTOR — DATE STARTED
INSPECTOR — DATE COMPLETED

32849-59-D

S-12

© COPYRIGHT. Martin/Ri, Rita et Martin

Proprietary Design: These documents and design are restricted by common law copyright. All materials except contractual finish and detailing shall remain the property of Downey + Associates Architects (dba Downey + Associates Architects, LLP) and be the property of Downey + Associates Architects (dba Downey + Associates Architects, LLP)

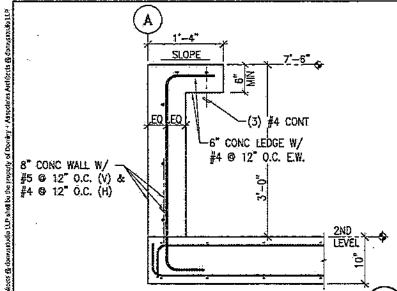

SCALE: 1" = 1'-0"

1

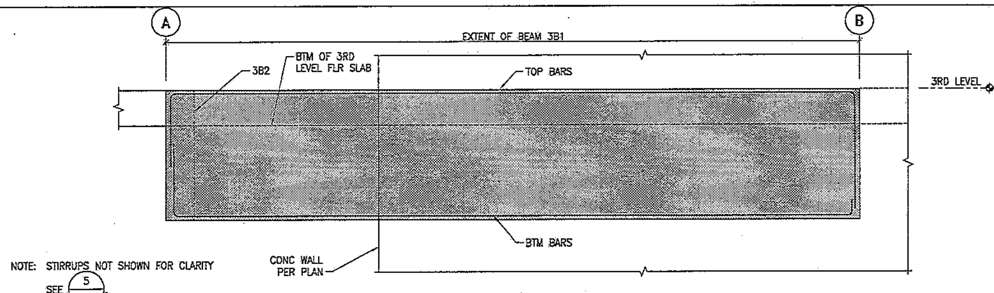

NOTE: STIRRUPS NOT SHOWN FOR CLARITY
SEE 5/–

BEAM 3B1 ELEVATION

SCALE: 3/4" = 1'-0"

3

BEAM MARK	WIDTH	DEPTH	TOP REINF	BTM REINF	STIRRUPS
2B1	1'-6"	2'-10"	(3) #5	(4) #6	#3
2B2	1'-6"	2'-10"	(3) #5	(4) #6	#3
2B3	1'-4"	1'-6"	(3) #5	(3) #5	#3
2B4	8"	2'-6"	(2) #6	(2) #6	#3
2B5	8"	1'-6"	(2) #6	(2) #6	#3
2B6	1'-0"	2'-6"	(2) #6	(2) #6	#3
3B1	8"	3'-0"	(2) #8	(2) #6	#3
3B2	8"	3'-0"	(2) #6	(2) #6	#3
3B3	1'-4"	1'-6"	(2) #5	(2) #6	#3

SECOND & THIRD FLOOR – GRAVITY BEAM SCHEDULE

SCALE: NONE

4

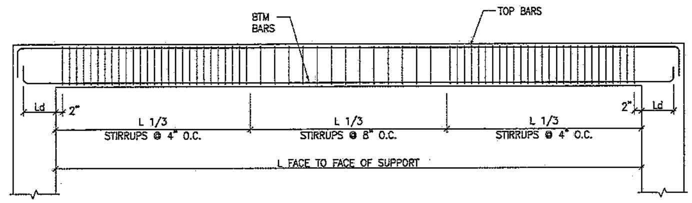

GRAVITY BEAM REINFORCEMENT

SCALE: NONE

5

S-13

SPEC. NO. 8147

MARTIN & LIBBY
STRUCTURAL ENGINEERS
4452 Glacier Avenue, San Diego, CA 92120
Ph (619) 280-9307 F (619) 284-3533

PLANS FOR THE CONSTRUCTION OF
South Mission Beach Lifeguard Station

Second & Third Floor Details | S3.3

CITY OF SAN DIEGO, CALIFORNIA
ENGINEERING & CAPITAL PROJECTS
ARCHITECTURAL ENGINEERING & CONTRACTS DIVISION
SHEET 60 OF 84 SHEETS

WBS S-00791

FOR CITY ENGINEER — DATE 10/13/2014

SUBMITTED BY: JIHAD SLEIMAN, PROJECT MANAGER

DESCRIPTION	BY	APPROVED	DATE	FILMED
ORIGINAL	WH/IT			

YOUSIF BENYAMIN, PROJECT ENGINEER
218-1683 CCS27 COORDINATES
1826-6253 CCS83 COORDINATES

CONTRACTOR / INSPECTOR / DATE STARTED / DATE COMPLETED

32849-60-D

© COPYRIGHT October 09, 2014 at 10:24AM
Proprietary design: These drawings and designs are protected by common law copyright. All patentable material contained herein are the property of Dominy + Associates Architects @ domusstudio LLP.

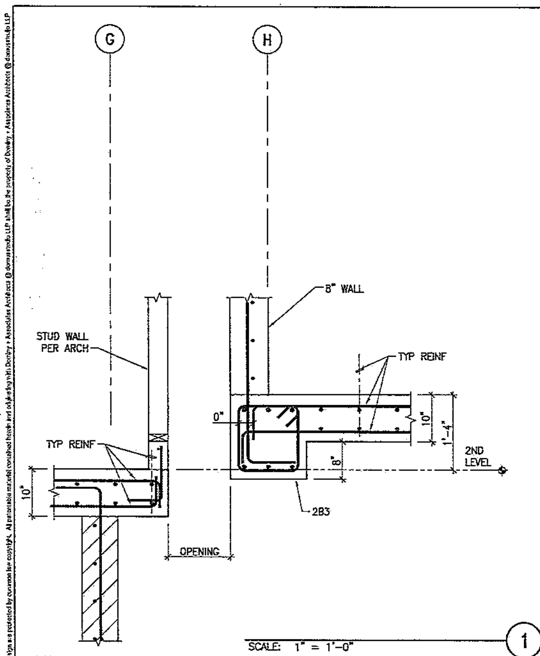

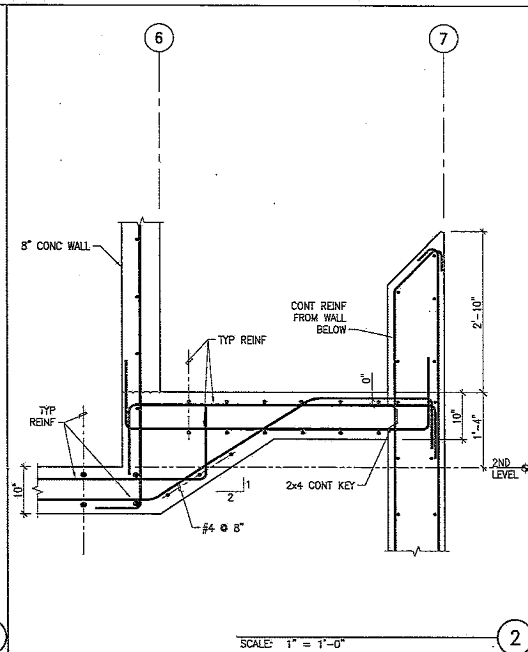

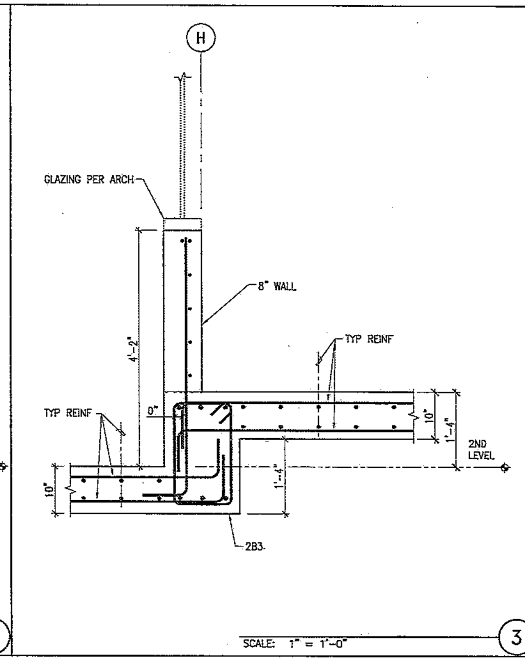

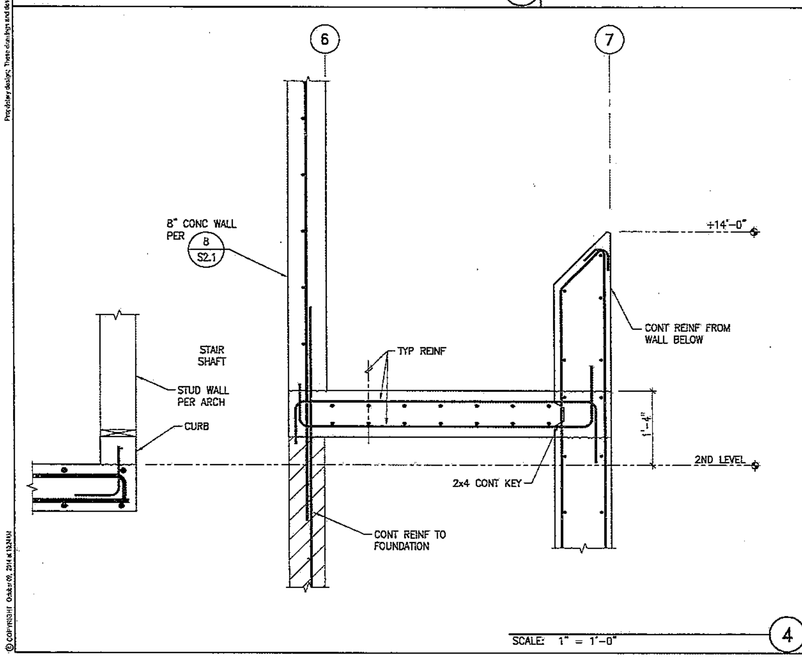

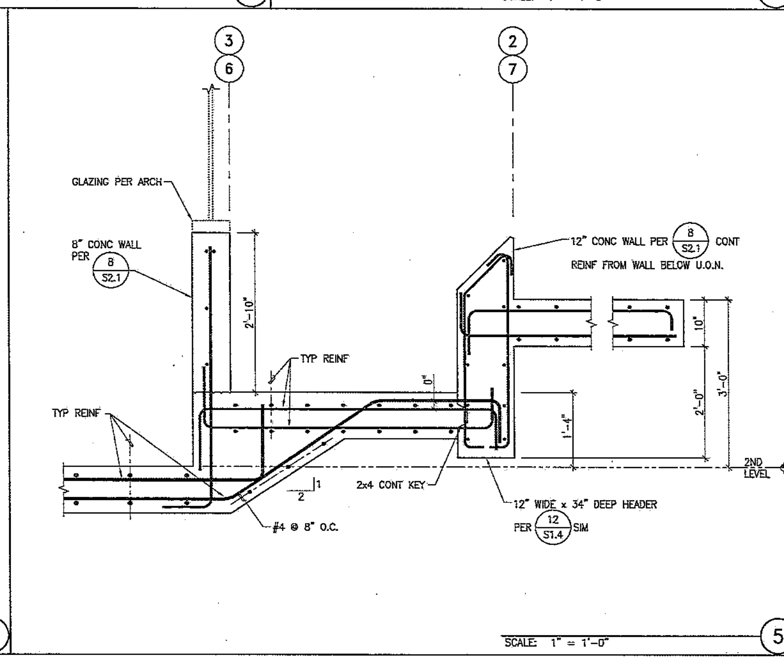

S-14

SPEC. NO. 8147

MARTIN & LIBBY
STRUCTURAL ENGINEERS
4452 Glacier Avenue, San Diego, CA 92120
Ph (619) 280-9307 F (619) 284-3553

REGISTERED PROFESSIONAL ENGINEER
JEAN N. LIBBY
No. 38412
Exp. 03-31-13
CIVIL
STATE OF CALIFORNIA

PLANS FOR THE CONSTRUCTION OF

South Mission Beach Lifeguard Station

Second Floor Details

S3.4

CITY OF SAN DIEGO, CALIFORNIA
ENGINEERING & CAPITAL PROJECTS
ARCHITECTURAL ENGINEERING & CONTRACTS DIVISION
SHEET 61 OF 94 SHEETS

WBS S-00791

APPROVED: ______ FOR CITY ENGINEER
10/13/2014 DATE

SUBMITTED BY: JIHAD SLEIMAN, PROJECT MANAGER

DESCRIPTION	BY	APPROVED	DATE	FILMED
ORIGINAL	WH/TT			

YOUSIF BENYAMIN
PROJECT ENGINEER
218-1693
CCS27 COORDINATES
1858-6253
CCS83 COORDINATES

CONTRACTOR ______ DATE STARTED ______
INSPECTOR ______ DATE COMPLETED ______

32849-61-D

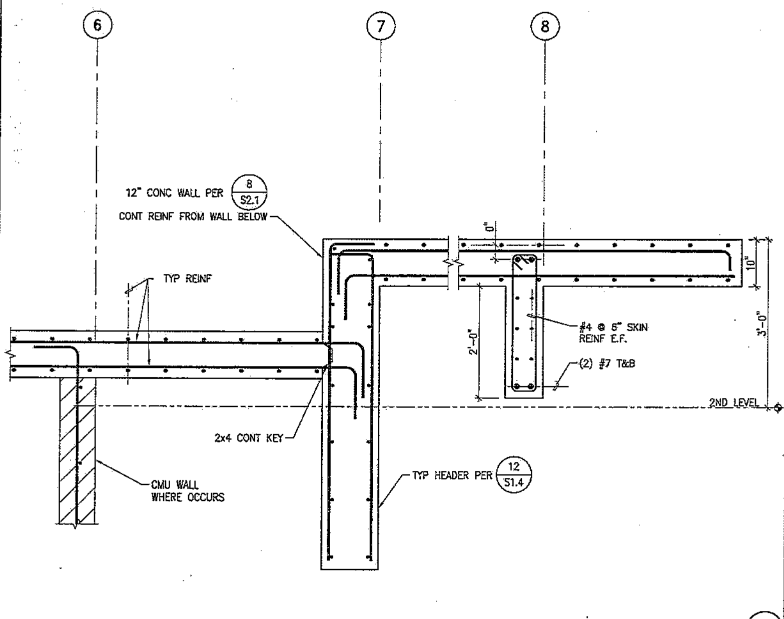

SCALE: 1" = 1'-0" (1)

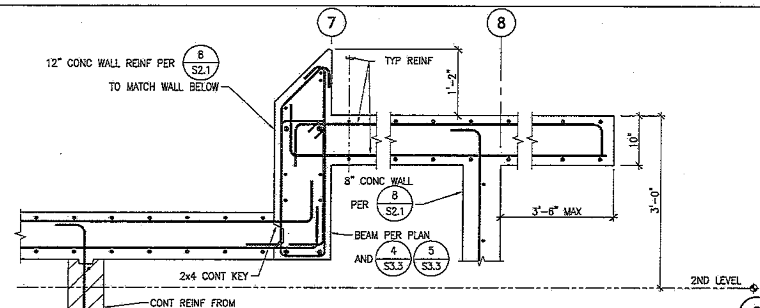

SCALE: 1" = 1'-0" (2)

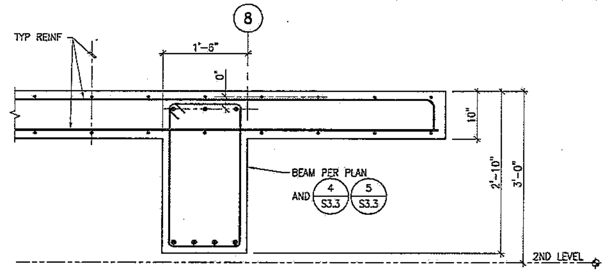

SCALE: 1" = 1'-0" (3)

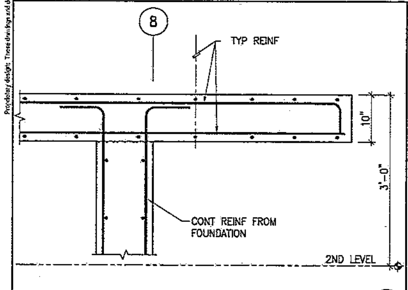

SCALE: 1" = 1'-0" (4)

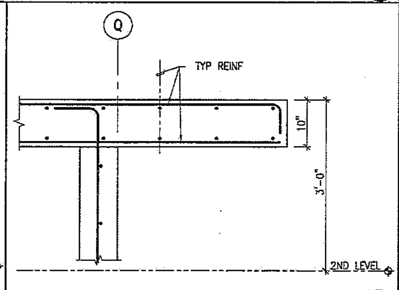

SCALE: 1" = 1'-0" (5)

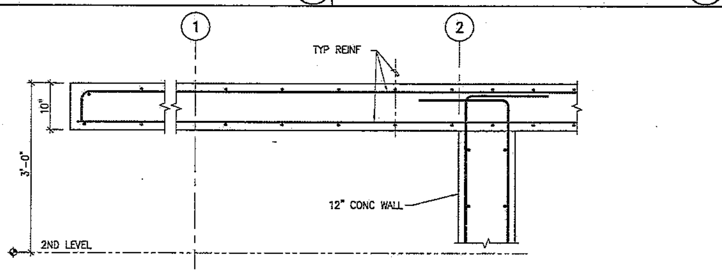

SCALE: 1" = 1'-0" (7)

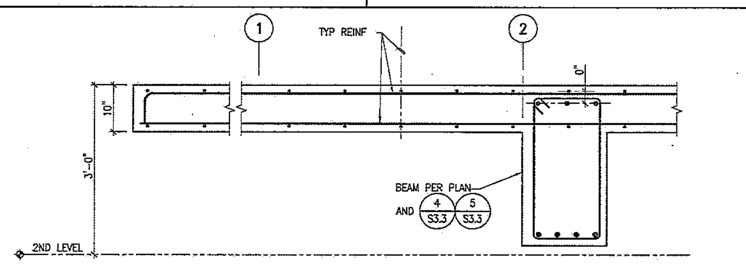

SCALE: 1" = 1'-0" (8)

S-15

SPEC. NO. 8147

MARTIN & LIBBY
STRUCTURAL ENGINEERS
4452 Glacier Avenue, San Diego, CA 92120
Ph (619) 280-9307 F (619) 284-3533

PLANS FOR THE CONSTRUCTION OF
South Mission Beach Lifeguard Station

Second Floor Details | S3.5

CITY OF SAN DIEGO, CALIFORNIA
ENGINEERING & CAPITAL PROJECTS
ARCHITECTURAL ENGINEERING & CONTRACTS DIVISION
SHEET 62 OF 84 SHEETS

WBS S-00791

FOR CITY ENGINEER — DATE 10/13/2014

SUBMITTED BY: JIHAD SLEIMAN, PROJECT MANAGER
YOUSIF BENJAMIN, PROJECT ENGINEER

DESCRIPTION	BY	APPROVED	DATE	FILMED
ORIGINAL	WH/JT			

218-1683
CCS27 COORDINATE
1838-6253
CCS83 COORDINATE

CONTRACTOR ____ DATE STARTED ____
INSPECTOR ____ DATE COMPLETED ____

32849-62-D

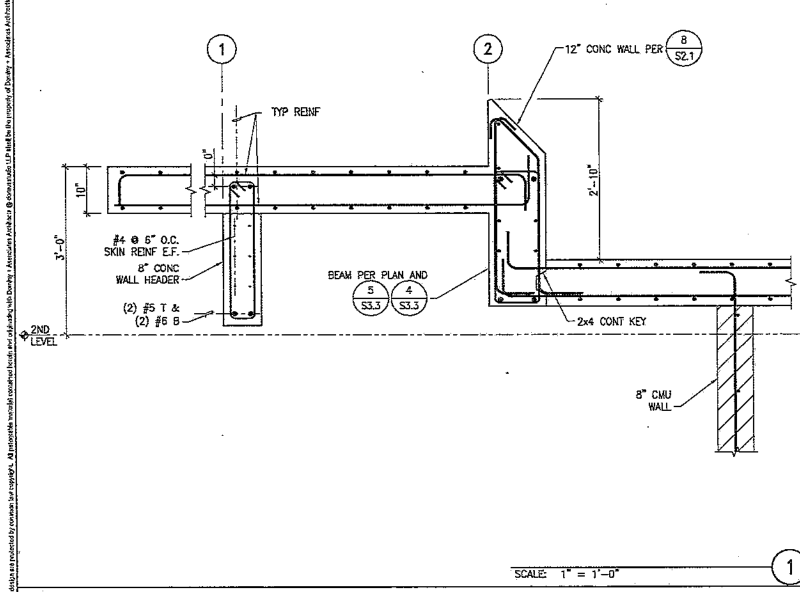

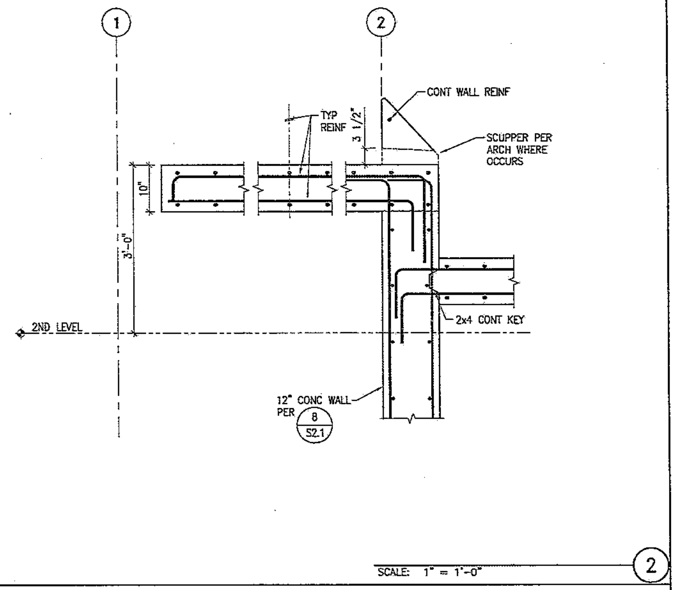

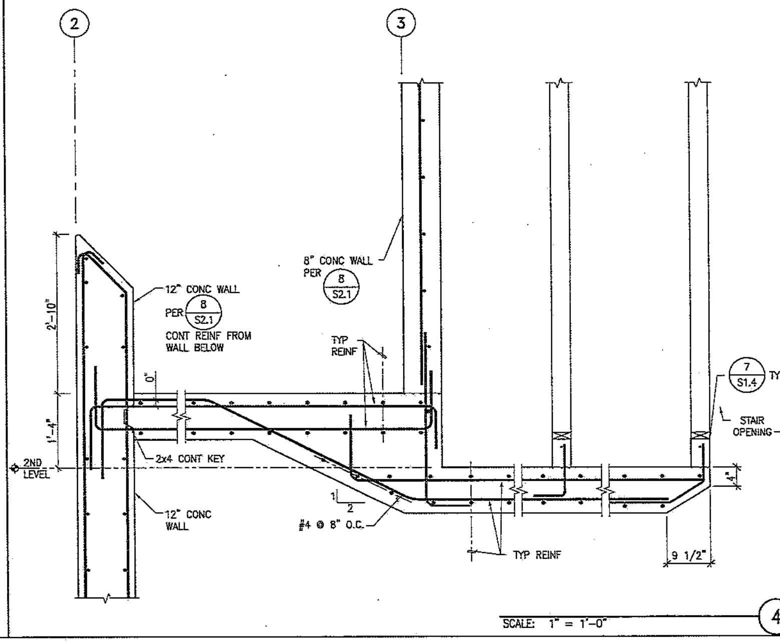

S-16

SPEC. NO. 8147

MARTIN & LIBBY
STRUCTURAL ENGINEERS
4452 Glacier Avenue, San Diego, CA 92120
Ph (619) 280-9307 F (619) 284-3533

REGISTERED PROFESSIONAL ENGINEER JEAN M. LIBBY No. 38412 Exp. 03-31-15 CIVIL STATE OF CALIFORNIA

PLANS FOR THE CONSTRUCTION OF
South Mission Beach Lifeguard Station

Second Floor Details	S3.6

CITY OF SAN DIEGO, CALIFORNIA
ENGINEERING & CAPITAL PROJECTS
ARCHITECTURAL ENGINEERING & CONTRACTS DIVISION
SHEET 63 OF 84 SHEETS

WBS S-00791

APPROVED: FOR CITY ENGINEER — DATE 10/13/2014

SUBMITTED BY: JIHAD SLEIMAN, PROJECT MANAGER

DESCRIPTION	BY	APPROVED	DATE	FILMED
ORIGINAL	WH/TT			

YOUSIF BENYAMIN
PROJECT ENGINEER
218-1693
CCS27 COORDINATES
1858-6253
CCS83 COORDINATES

CONTRACTOR ______ DATE STARTED ______
INSPECTOR ______ DATE COMPLETED ______

32849-63-D

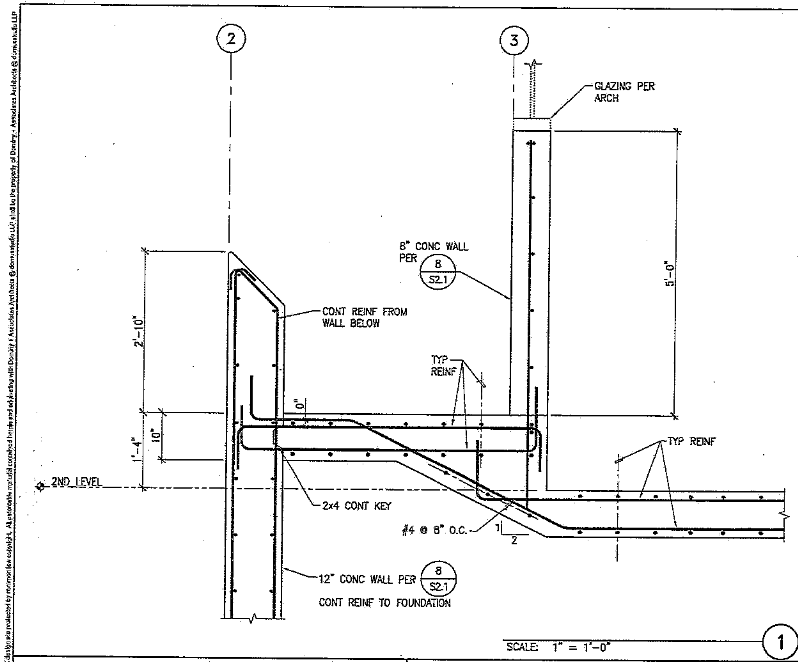

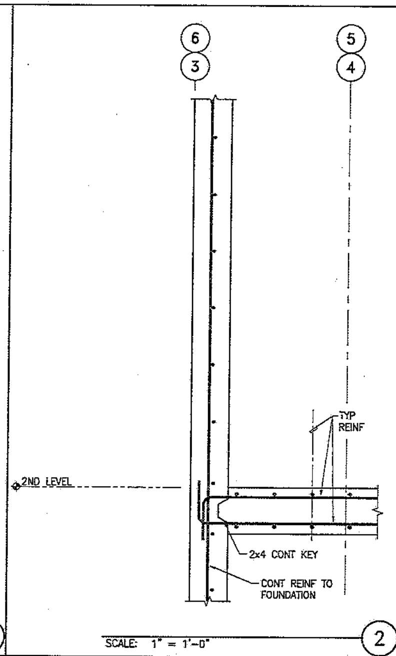

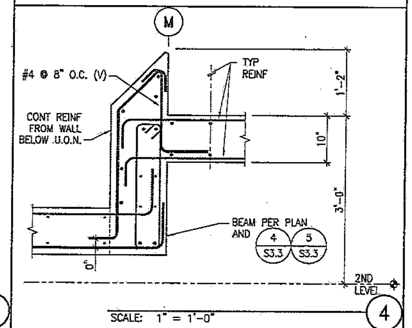

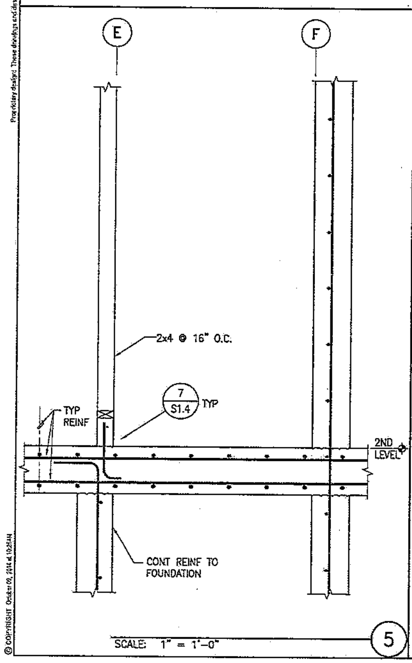

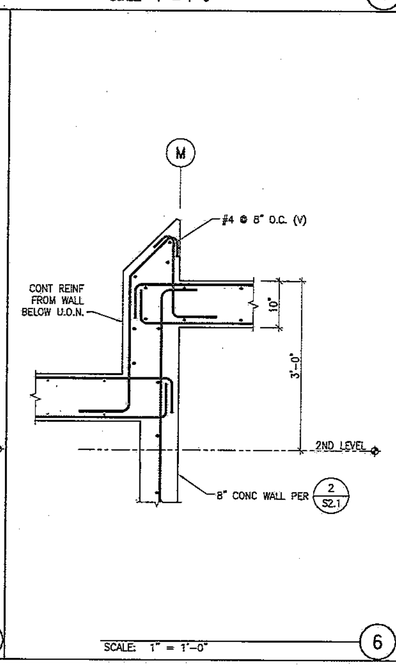

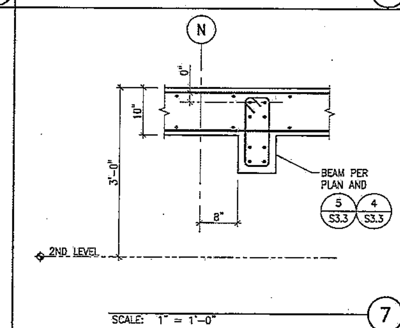

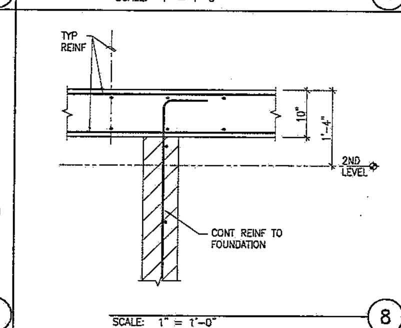

S-17

SPEC. NO. 8147

MARTIN & LIBBY
STRUCTURAL ENGINEERS
4452 Glacier Avenue, San Diego, CA 92120
Ph (619) 280-9307 F (619) 284-3533

REGISTERED PROFESSIONAL ENGINEER
JEAN M. LIBBY
Exp. 03-31-13
CIVIL
STATE OF CALIFORNIA

PLANS FOR THE CONSTRUCTION OF
South Mission Beach Lifeguard Station

Second Floor Details S3.7

CITY OF SAN DIEGO, CALIFORNIA
ENGINEERING & CAPITAL PROJECTS
ARCHITECTURAL ENGINEERING & CONTRACTS DIVISION
SHEET 64 OF 84 SHEETS

WBS S-00791

APPROVED: FOR CITY ENGINEER — DATE 10/13/2014

SUBMITTED BY: JIHAD SLEIMAN, PROJECT MANAGER

DESCRIPTION	BY	APPROVED	DATE	FILMED
ORIGINAL	WH/TT			

YOUSIF BENYAMIN
PROJECT ENGINEER
218-1693
CCS27 COORDINATES
1858-6253
CCS83 COORDINATES

CONTRACTOR ______ DATE STARTED ______
INSPECTOR ______ DATE COMPLETED ______

32849-64-D

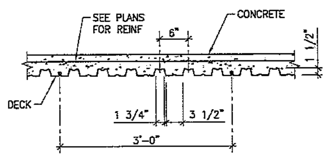

MINIMUM PROPERTIES				
GA	WEIGHT (P.S.F.)	I (IN⁴)/FT	+S (IN³)/FT	−S (IN³)/FT
20	2.3	0.216	0.235	0.248

COMPOSITE STEEL DECK
SCALE: NONE
(1)

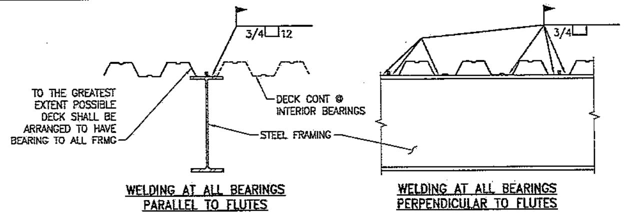

NOTES:
1. ALL 3/4"ø PLUG WELDS SHALL BE 1/2"ø EFFECTIVE.
2. BUTTON PUNCH SIDE LAPS @ 36".
3. SHEAR STUDS, WHEN WELDED THRU DECK, MAY BE SUBSTITUTED FOR PLUG WELDS ON A ONE TO ONE BASIS.

COMPOSITE STEEL DECK WELDING
SCALE: NONE
(3)

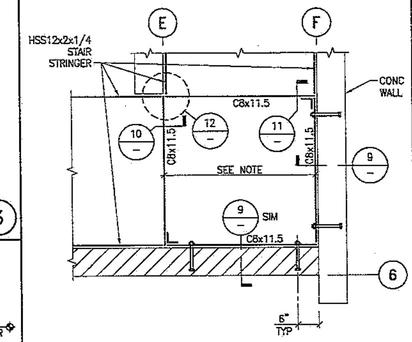

NOTE: 3 1/2" NORMAL WT CONC f'c = 4200 P.S.I. OVER 1 1/2"-20 GA GALV FORMLOK DECK WITH #4 @ 12" O.C; PUDDLE WELD TO BEARINGS PER TYP DET (3).

STAIR LANDING PLAN
SCALE: 3/4" = 1'-0"
(8)

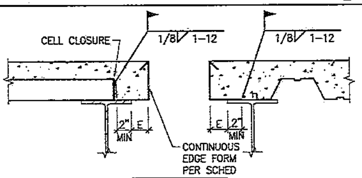

E	GA
2"	18
3"	16
4" & 5"	14
6" & 7"	12
8" & 9"	10

TYPICAL EDGE DECK DETAIL
SCALE: NONE
(5)

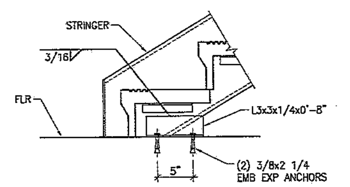

STAIR UP
SCALE: 1 1/2" = 1'-0"
(6)

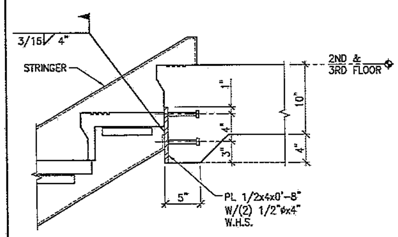

STAIR DOWN
SCALE: 1 1/2" = 1'-0"
(7)

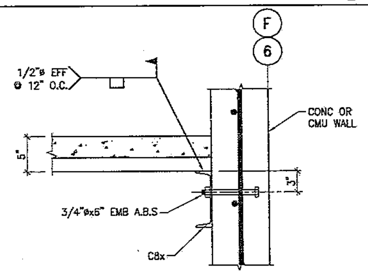

SCALE: 1 1/2" = 1'-0"
(9)

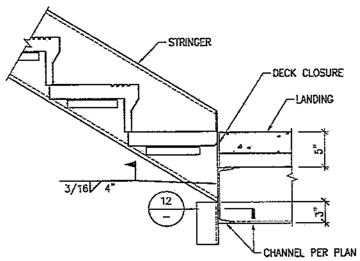

SCALE: 1 1/2" = 1'-0"
(10)

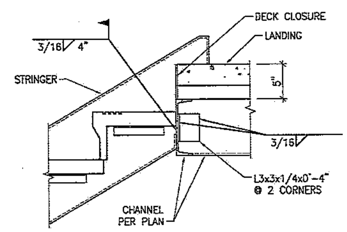

SCALE: 1 1/2" = 1'-0"
(11)

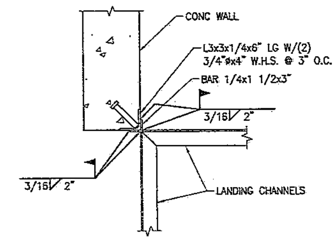

PLAN
SCALE: 1 1/2" = 1'-0"
(12)

S-18

MARTIN & LIBBY
STRUCTURAL ENGINEERS
4452 Glacier Avenue, San Diego, CA 92120
Ph (619) 280-9307 F (619) 284-3533

SPEC. NO. 8147

REGISTERED PROFESSIONAL ENGINEER
Exp. 03-31-15
CIVIL
STATE OF CALIFORNIA

PLANS FOR THE CONSTRUCTION OF
South Mission Beach Lifeguard Station

Details | S3.8

CITY OF SAN DIEGO, CALIFORNIA
ENGINEERING & CAPITAL PROJECTS
ARCHITECTURAL ENGINEERING & CONTRACTS DIVISION
SHEET 65 OF 94 SHEETS

WBS S-00791

FOR CITY ENGINEER 10/13/2014 DATE

SUBMITTED BY: JIHAD SLEIMAN PROJECT MANAGER
YOUSIF BENYAMIN PROJECT ENGINEER
218-1689 CCS27 COORDINATES
1856-6253 CCS83 COORDINATES

DESCRIPTION	BY	APPROVED	DATE	FILMED
ORIGINAL	WH/JT			

CONTRACTOR ____ DATE STARTED ____
INSPECTOR ____ DATE COMPLETED ____

32849-65-D

MECHANICAL GENERAL NOTES

1. CONTRACTOR SHALL CAREFULLY REVIEW THE PLANS AND SPECIFICATIONS PRIOR TO BID. CONTRACTOR SHALL ALSO REVIEW PLANS AND SPECIFICATIONS OF OTHER RELATED TRADES (INCLUDING STRUCTURAL AND ELECTRICAL) PRIOR TO BID TO ENSURE AN ACCURATE UNDERSTANDING OF EXACT SCOPE OF WORK.
2. CONTRACTOR SHALL VERIFY AND COORDINATE ALL EQUIPMENT, CAPACITIES, SIZES, WEIGHTS, VOLTAGES, AND ALL OTHER SCHEDULED INFORMATION WITH ALL OTHER APPLICABLE TRADES AND WITH THE MANUFACTURER PRIOR TO INSTALLATION.
3. THESE DRAWINGS ARE ESSENTIALLY DIAGRAMMATIC AND ARE NOT INTENDED TO INDICATE ALL NECESSARY OFFSETS OF DUCTWORK AND PIPING. THE CONTRACTOR SHALL INSTALL MATERIAL AND EQUIPMENT IN A MANNER AS TO CONFORM TO STRUCTURE, AVOID OBSTRUCTIONS, PRESERVE HEADROOM, AND KEEP OPENINGS AND PASSAGEWAYS CLEAR. ALL INSTALLATIONS SHALL BE CONSISTENT WITH NORMALLY ACCEPTABLE INDUSTRY STANDARDS. THE CONTRACTOR SHALL NOTIFY THE OWNER IN WRITING OF ANY DISCREPANCIES OR CONFLICTS THAT WOULD AFFECT THE SYSTEM PERFORMANCE OR WHICH WOULD INCUR ADDITIONAL COSTS. THIS NOTIFICATION SHALL BE MADE PRIOR TO THE INSTALLATION.
4. EQUIPMENT INDICATED ON THESE DRAWINGS ARE SHOWN IN APPROXIMATE POSITION(S). CONTRACTOR SHALL FIELD VERIFY ALL CONDITIONS INCLUDING EQUIPMENT LOCATIONS, P.O.C.'S, AND STRUCTURAL MEMBERS PRIOR TO INSTALLATION. IN ALL CASES, ADEQUATE ACCESS (PER MANUFACTURER'S RECOMMENDATIONS AND CODE COMPLIANCE) FOR MAINTENANCE AND REPLACEMENT OF EQUIPMENT SHALL BE PROVIDED.
5. ALL WORK SHALL BE DONE IN ACCORDANCE WITH ALL APPLICABLE CODES. NOTHING SHOWN IN THE PLANS OR STATED IN THE SPECIFICATIONS IS INTENDED TO INDICATE THAT THE INSTALLATION OR CONNECTIONS OF ANY ITEM OR DEVICE SHOULD BE DONE CONTRARY TO MANUFACTURER'S INSTRUCTIONS AND ALL APPLICABLE CODES AND REGULATIONS. THE CONTRACTOR IS RESPONSIBLE TO ENSURE THAT THE INSTALLATION AND CONNECTIONS OF ALL ITEMS AND DEVICES CONFORMS TO MANUFACTURER'S INSTRUCTIONS AND TO ALL APPLICABLE CODES AND REGULATIONS.
6. ALL HVAC EQUIPMENT, MATERIAL, AND ALL CONNECTIONS THERETO SHALL BE INSTALLED COMPLETE PER MANUFACTURERS INSTRUCTIONS TO PROVIDE A COMPLETE AND FULLY OPERATIONAL SYSTEM.
7. DUCT SIZES INDICATED ON DRAWINGS ARE INSIDE NET CLEAR DIMENSIONS.
8. CONTRACTOR SHALL REVIEW ANY REVISION TO DUCTWORK, SIZING AND ROUTING WITH THE ENGINEER PRIOR TO INSTALLATION. DUCTWORK THAT IS RESIZED MUST MAINTAIN THE SAME CROSS-SECTIONAL AREA.
9. IF THE CONTRACTORS' USE OF SUBSTITUTE MATERIALS, EQUIPMENT OR METHODS OF INSTALLATION REQUIRES ANY CHANGES IN OTHER TRADES WORK FROM THAT SHOWN ON THE DRAWINGS, THE EXTRA COST OF THE OTHER TRADES WORK SHALL BE THE RESPONSIBILITY OF THE CONTRACTOR INITIATING THE SUBSTITUTION.
10. SUBMITTALS: APPROVAL OF SUBMITTALS DOES NOT RELEASE THE CONTRACTOR FROM OBLIGATIONS TO FULLY COMPLY WITH ALL REQUIREMENTS OF THE CONSTRUCTION DOCUMENTS OR APPLICABLE CODE REGULATIONS.
11. THE CONTRACTOR SHALL BE RESPONSIBLE FOR ALL CUTTING AND PATCHING TO COMPLETE THE INSTALLATION OF THE MECHANICAL WORK. ALL EXPOSED FINISHED AREAS THAT ARE DAMAGED AS A RESULT OF THIS WORK SHALL BE REPAIRED TO MATCH THE EXISTING CONDITION AT NO ADDITIONAL COST TO THE OWNER.
12. THE CONTRACTOR SHALL FURNISH ALL MATERIAL, LABOR, EQUIPMENT, APPURTENANCES, AND OTHER CONTRACTUAL ITEMS REQUIRED FOR THE COMPLETE INSTALLATION OF THE MECHANICAL WORK TO THE SATISFACTION OF THE OWNER.
13. THE CONTRACTOR SHALL OBTAIN AND PAY FOR ALL PERMITS, LICENSES, AND INSPECTIONS REQUIRED TO COMPLETE THE MECHANICAL WORK.
14. COORDINATE FINAL LOCATION OF ALL THERMOSTATS AND ROOM SENSORS DURING CONSTRUCTION. REFER TO THE ARCHITECTURAL MILLWORK PLANS AND ELEVATIONS PRIOR TO ROUGHING IN THERMOSTATS OR ROOM SENSORS.
15. MECHANICAL CONTRACTOR TO PROVIDE ALL ACCESS PANELS AND GYPBD MOUNTED ARCHITECTURAL ACCESS DOORS AS REQUIRED TO PROVIDE ACCESS TO ALL MAINTENANCE POINTS AT EQUIPMENT, SFD, ETC. ACCESS PANELS AND DOORS SHALL HAVE PAINT GRADE FINISH.
16. PROVIDE BALANCING DAMPERS AT ALL DIFFUSER RUN OUTS, BRANCH TAKE OFFS, OUTSIDE AIR DUCTS, AND MAIN DUCT BRANCHES.
17. ALL EARTHQUAKE RESISTANT DESIGNS FOR THE MECHANICAL EQUIPMENT SHALL CONFORM TO THE REGULATIONS OF THE CBC 2001 CHAPTER 16 (SECTION 1632A) STRUCTURAL FORCES. THE EQUIPMENT SHALL BE SECURED TO WITHSTAND A FORCE IN ANY DIRECTION AS DETERMINED BY SECTION 1632A.
18. PROVIDE ACOUSTICALLY LINED DUCTWORK WHERE INDICATED.
19. ROUND DUCT CONNECTION SIZES TO DIFFUSER AND GRILLES SHALL BE, AS A MINIMUM, THE SAME AS THE CONNECTION NECK DIAMETER, UNLESS NOTED OTHERWISE.
20. LIMIT USE OF FLEXIBLE DUCTWORK TO 5FT MAXIMUM. PROVIDE RIGID GALVANIZED SHEET METAL CONNECTIONS TO DIFFUSERS UNLESS A PROPER FULL RADIUS ELBOW CONNECTION CAN BE PROVIDED.
21. LOCATE VOLUME DAMPERS OVER ACCESSIBLE CEILINGS WHEREVER POSSIBLE. WHERE DAMPERS MUST BE LOCATED OVER NON-ACCESSIBLE CEILINGS, PROVIDE CONCEALED DAMPER REGULATORS. STANDARD OF ACCEPTANCE: YOUNG REGULATOR OR DURODYNE. CONCEALED REGULATORS ARE NOT REQUIRED IN WASHROOMS & CUSTODIAL ROOMS.
22. INSULATION APPLIED TO THE EXTERIOR SURFACE OF DUCTS LOCATED IN BUILDING SHALL HAVE A FLAME SPREAD OF NOT MORE THAN 25 AND A SMOKE-DEVELOPED RATING OF NOT MORE THAN 50 WHEN TESTED AS A COMPOSITE INSTALLATION INCLUDING INSULATION, FACING MATERIALS, TAPES AND ADHESIVES AS NORMALLY APPLIED.
23. DO NOT CUT OR NOTCH ANY STRUCTURAL MEMBERS WITHOUT STRUCTURAL ENGINEER'S APPROVAL.
24. ALL MATERIALS LOCATED WITHIN THE PLENUM MUST COMPLY WITH SECTION 604.2 OF THE UMC.
25. ALL COMBUSTIBLE MATERIALS LOCATED WITHIN THE PLENUM MUST COMPLY WITH SECTION 601.3 OF THE UMC.
26. DUCTWORK SHALL BE CONSTRUCTED AND INSTALLED PER SMACNA "HVAC DUCT CONSTRUCTION STANDARDS METAL AND FLEXIBLE" 2005 EDITION.

MECHANICAL LEGEND

SYMBOL	ABBREV	DESCRIPTION	SYMBOL	ABBREV	DESCRIPTION
		CEILING SUPPLY DIFFUSER		IN.	INCH
		CEILING RETURN GRILLE		LBS.	POUNDS
		CEILING EXHAUST REGISTER		LDB	LEAVING DRY BULB
		WALL SUPPLY GRILLE		MAX.	MAXIMUM
(T)		ROOM THERMOSTAT		MIN.	MINIMUM
(S)		WALL SWITCH		NO.	NUMBER
	CAP.	CAPACITY		O.A.	OUTSIDE AIR
	C.F.M.	CUBIC FEET PER MINUTE		OPER.	OPERATING
	COMP.	COMPRESSOR		SENS.	SENSIBLE
	COND.	CONDENSER		S.F.	SQUARE FEET
	DB	DRY BULB		S.P.	STATIC PRESSURE
	D/G	DOOR GRILLE		TYP	TYPICAL
	ENT.	ENTERING		U/C	UNDERCUT DOOR
	EXT.	EXTERNAL		V./PH./HZ.	VOLTS/PHASE/HERTZ
	EQUIP.	EQUIPMENT		WT.	WEIGHT
	H.P.	HORSEPOWER			

DIFFUSER / REGISTER OR GRILLE TYPE: TYPE, SIZE, AIR QUANTITY (CFM)

EQUIPMENT IDENTIFICATION SYMBOL: EQUIPMENT TYPE, EQUIPMENT IDENTIFIER

MECHANICAL SHEET INDEX

SHEET NO.	SHEET CONTENTS
M0.1	MECHANICAL LEGENDS AND GENERAL NOTES
M0.2	MECHANICAL SCHEDULES
M0.3	MECHANICAL TITLE 24 SHEETS
M0.4	MECHANICAL TITLE 24 SHEETS
M0.5	MECHANICAL TITLE 24 SHEETS
M1.1	FIRST FLOOR MECHANICAL PLAN
M1.2	SECOND FLOOR AND ROOF MECHANICAL PLANS
M1.3	OBSERVATION FLOOR MECHANICAL PLAN
M4.1	MECHANICAL DETAILS
M4.2	MECHANICAL DETAILS

CODE COMPLIANCE NOTES

1. CALIFORNIA MECHANICAL CODE 2010 (CMC 2010), CALIFORNIA PLUMBING CODE (2010) AND 2008 TITLE 24 ENERGY STANDARDS ARE THE CURRENT CODES/STANDARDS THAT ARE APPLICABLE TO THIS PROJECT.
2. EXHAUST DUCTS SHALL BE EQUIPPED WITH BACK-DRAFT DAMPERS (SECTION 504.0 CMC).
3. ROOF ACCESS LADDER SHALL COMPLY WITH SECTION 304 CMC.
4. PROVIDE SMOKE DETECTORS IN MAIN SUPPLY AIR DUCTS OF AIR MOVING SYSTEMS EXCEEDING 2,000 CFM PER SECTION 609.0 CMC.
5. DRYER VENTS SHALL BE EQUIPPED WITH BACK-DRAFT DAMPERS (SECTION 504.0 CMC).
6. EXHAUST DUCT FOR TYPE II DRYERS SHALL COMPLY WITH SECTION 905.5 CMC.
7. TYPE II CLOTHES DRYERS SHALL BE EQUIPPED OR INSTALLED WITH LINT CONTROLLING MEANS.
8. CERTIFICATE OF ACCEPTANCE (MECH-2A AND ENV-2A) AND ALL RELATED ACCEPTANCE DOCUMENTS SHALL BE SUBMITTED TO THE FIELD INSPECTOR DURING CONSTRUCTION. CERTIFICATE OF OCCUPANCY WILL NOT BE ISSUED UNTIL THESE FORMS ARE REVIEWED AND APPROVED.
9. INSULATION MATERIAL SHALL MEET THE CALIFORNIA QUALITY STANDARD PER SECTION 118 ENERGY EFFICIENCY STANDARDS (EES).
10. DOORS AND WINDOWS SHALL MEET THE MINIMUM INFILTRATION REQUIREMENTS PER SECTION 116 EES.
11. ALL PIPING AND DUCT WORK SHALL BE INSULATED CONSISTENT WITH THE REQUIREMENTS OF SECTIONS 118, 123, 124 TITLE 24 ENERGY STANDARDS AND TABLE 6-6A AND 6-6B OF CMC.
12. ALL HVAC SYSTEMS SHALL MEET THE CONTROL REQUIREMENTS PER SECTION 112 AND 122 EES.
13. ALL HVAC EQUIPMENT AND APPLIANCES SHALL MEET THE REQUIREMENTS PER SECTION 111-113, 115, 120-124 TITLE 24 ENERGY STANDARDS.
14. OCCUPIED AREAS OF MECHANICALLY VENTILATED BUILDINGS SHALL BE PROVIDED WITH AIR FILTRATION MEDIA FOR OUTSIDE AND RETURN AIR PRIOR TO OCCUPANCY THAT PROVIDES AT LEAST MERV OF 8 (SEC 5.504.5.3), PLEASE SHOW ON THE PLANS.
15. COVERING OF DUCT OPENINGS AND PROTECTION OF MECHANICAL EQUIPMENT DURING CONSTRUCTION SHALL BE PROVIDED PER SECTION 5.504.3 OF THE CALIFORNIA GREEN BUILDING.
16. REGULARLY OCCUPIED AREAS OF THE BUILDING SHALL BE PROVIDED WITH AIR FILTRATION MEDIA, WHICH PROVIDES AT LEAST A MERV OF 8, FOR OUTSIDE AND RETURN AIR PRIOR TO OCCUPANCY.
17. CLEARANCES OF MINIMUM 25 FT SHALL BE PROVIDED BETWEEN OUTSIDE AIR INTAKES OF HVAC UNITS AND OUTDOOR AREAS THAT ARE PROVIDED FOR SMOKING.
18. BUILDING ASSEMBLIES AND COMPONENTS WITH STC VALUES DETERMINED IN ACCORDANCE WITH ASTM E90 AND ASTM E413 SHALL BE EMPLOYED.
19. WALL AND FLOOR-CEILING ASSEMBLIES MAKING UP THE BUILDING ENVELOPE SHALL HAVE AN STC VALUE OF AT LEAST 50 AND EXTERIOR WINDOWS SHALL HAVE A MINIMUM STC OF 30 PER SECTION 5.507.4 CGBSC.

M-1

SPEC. NO. 8147

M-E Engineers, Inc.
3760 Convoy St. Suite 340
San Diego CA 92111
t.858.565.3600/f.858.565.3606
www.me-engineers.com

REGISTERED PROFESSIONAL ENGINEER LAWRENCE A. BROOKS No. M16686 MECHANICAL STATE OF CALIFORNIA 10/07/14

PLANS FOR THE CONSTRUCTION OF
South Mission Beach Lifeguard Station

MECHANICAL LEGEND & GENERAL NOTES — M0.1

CITY OF SAN DIEGO, CALIFORNIA
ENGINEERING & CAPITAL PROJECTS
ARCHITECTURAL ENGINEERING & CONTRACTS DIVISION
SHEET 65 OF 94 SHEETS

WBS S-00791

FOR CITY ENGINEER — 10/13/2014 DATE

SUBMITTED BY: JIHAD SLEIMAN, PROJECT MANAGER
YOUSIF BENYAMIN, PROJECT ENGINEER
216-1693 CCS27 COORDINATES
1858-6253 CCS83 COORDINATES

DESCRIPTION	BY	APPROVED	DATE	FILMED
ORIGINAL	L A B			

CONTRACTOR ______ DATE STARTED ______
INSPECTOR ______ DATE COMPLETED ______

32849-66-D

South Mission Beach Lifeguard Station
San Diego, California

Proprietary design: These drawings and design are protected by common law copyright. All patentable material contained herein and originating with Domusstudio LLP shall be the property of Domusstudio LLP
© COPYRIGHT October 01, 2014 at 2:59PM

ROOFTOP PACKAGE HEAT PUMP SCHEDULE

EQUIP. NO.	MANUFACTURER	MODEL	C.F.M.	MIN. O.A.	EXT. S.P. (IN. H20)	ELECTRICAL DATA: COMP. RLA	COMP. LRA	COND. FAN FLA	INDOOR FAN FLA	INDOOR FAN H.P.	V. / PH. / HZ.	MCA (AMP)	MOCP (AMP)	HEATING: CAP. (MBH)	LDB (F)	COOLING: TOTAL CAP. (MBH)	SENS. (MBH)	ENT. DB (F)	ENT. WB (F)	AMBIENT (F)	LDB (F)	EER/SEER	HSPF	OPER. WT. (LBS.)	REMARKS
RTU-1	YORK	B6HZ030A06	900	580	1.0	14.7	73.0	1.2	4.1	0.5	208/1/60	23.7	30.0	27.0	95	26.0	16.8	80	67	95	59	11.0/13.0	7.7	460	(1)(2)(3)(4)(5)(6)
RTU-2	YORK	B6HQ060A06	2,000	135	1.0	25.0	134.0	4.4	9.1	1.5	208/1/60	44.8	60.0	53.0	95	50.7	30.0	80	67	95	57	12.0/14.0	7.7	700	(1)(2)(3)(4)(6)

(1) DISCONNECT PROVIDED BY DIVISION 26. (2) PROVIDE PRE-FABRICATED ROOF MOUNTING CURB. (3) R-410A REFRIGERANT. (4) PROVIDE ENTIRE UNIT WITH CORROSION RESISTANT COATING, SEE SPECIFICATION SECTION "CORROSION RESISTANT COATING". (5) INTERLOCK OPERATION WITH EF-4 & EF-5. (6) PROVIDE OUTSIDE AIR PACKAGE FOR ROOFTOP UNITS PROVENT PART #OA2POAFF1860100BL OR EQUAL.

SPLIT SYSTEM HEAT PUMP UNIT SCHEDULE

EQUIP. NO.	MANUFACTURER	MODEL	C.F.M.	MIN. O.A.	EXT. S.P. (IN. H20)	ELECTRICAL DATA: COMP. RLA	COMP. LRA	COND. FAN FLA	INDOOR FAN FLA	FAN H.P.	V. / PH. / HZ.	MCA (AMP)	MOCP (AMP)	HEATING: CAP. (MBH)	LDB (F)	COOLING: TOTAL CAP. (MBH)	SENS. (MBH)	ENT. DB (F)	ENT. WB (F)	AMBIENT (F)	LDB (F)	SEER	HSPF	OPER. WT. (LBS.)	REMARKS
CU-1	YORK	YHJD18S41S2	–	–	–	9.0	48.0	0.7	–	1/10	208/1/60	11.9	15.0	14.0	–	17.9	10.4	–	–	95	–	14.0	7.7	250	(1)(3)
FC-1	YORK	AHE18B3XH21	450	125	0.4	–	–	–	2.8	1/3	208/1/60	3.5	15.0	14.0	95	17.9	10.4	77	65	–	57.8	14.0	–	180	(1)(2)

(1) DISCONNECT PROVIDED BY DIVISION 26. (2) PROVIDE THERMAL EXPANSION VALVE TXV KIT S1-1TVM4G1. (3) PROVIDE ENTIRE UNIT WITH CORROSION RESISTANT COATING, SEE SPECIFICATION SECTION "CORROSION RESISTANT COATING".

FAN SCHEDULE

EQUIP. NO.	MANUFACTURER & MODEL	SERVICE	LOCATION	TYPE	CFM	TSP (IN.)	FAN (RPM)	SONES	ELECTRICAL V. / PH. / HZ.	WATTS	OPER. WT. (LBS.)	REMARKS
EF-1	GREENHECK SP-A190	FIRST AID ROOM (101)	CEILING	CEILING EXHAUST FAN	150	0.3	1,373	3.0	115/1/60	113 W	30	(1)(2)(3)(4)
EF-2	GREENHECK SP-A290	BOARD STORAGE (114)	CEILING	CEILING EXHAUST FAN	220	0.3	1000	3.0	115/1/60	81 W	35	(1)(2)(3)(8)
EF-3	GREENHECK SP-A125	RESTROOM (112)	CEILING	CEILING EXHAUST FAN	75	0.3	1100	1.5	115/1/60	53 W	30	(1)(2)(3)(5)
EF-4	GREENHECK AE-10-420-A8	LOCKER ROOM (103)	ROOF	AXIAL EXHAUST FAN	250	0.3	1725	12.0	115/1/60	1/8 HP	50	(1)(2)(3)(6)(9)
EF-5	GREENHECK AE-10-420-A8	LOCKER ROOM (104)	ROOF	AXIAL EXHAUST FAN	250	0.3	1725	12.0	115/1/60	1/8 HP	50	(1)(2)(3)(6)(9)
EF-6	GREENHECK SP-A125	JANITOR ROOM (108)	CEILING	CEILING EXHAUST FAN	75	0.3	1100	1.5	115/1/60	53 W	30	(1)(2)(3)(7)
EF-7	GREENHECK SP-A190	ELECTRICAL ROOM (109)	CEILING	CEILING EXHAUST FAN	140	0.3	1,330	2.7	115/1/60	113 W	30	(1)(2)(3)(7)
EF-8	GREENHECK SP-A125	RESTROOM (201)	CEILING	CEILING EXHAUST FAN	75	0.3	1100	1.5	115/1/60	53 W	30	(1)(2)(3)(5)
EF-9	GREENHECK SP-A125	TELECOM ROOM (115)	CEILING	CEILING EXHAUST FAN	75	0.3	1100	1.5	115/1/60	53 W	30	(1)(2)(3)(7)
SF-1	GREENHECK AS-12-433-A4	RESCUE VEHICLES (105)	ROOF	AXIAL SUPPLY FAN	700	0.4	1725	15.1	115/1/60	1/4 HP	50	(1)(3)(4)(9)

(1) PROVIDE SOLID STATE SPEED CONTROL. (2) PROVIDE BACKDRAFT DAMPER. (3) MANUFACTURER TO PROVIDE INTEGRAL DISCONNECT. (4) OPERATION THROUGH WALL SWITCH.
(5) INTERLOCK OPERATION WITH LIGHTS. (6) INTERLOCK OPERATION WITH RTU-1. (7) PROVIDE LINE VOLTAGE THERMOSTAT. (8) PROVIDE CONTINUOUS OPERATION.
(9) PROVIDE WITH FACTORY 8" ROOF CURB.

AIR DEVICE SCHEDULE

EQUIP. NO.	MANUFACTURER & MODEL	SERVICE	SURFACE TYPE	MAX CFM	NECK SIZE	FACE SIZE	MAX NC	REMARKS
CD-1	TITUS – MCD-AA	SUPPLY	LAY-IN CEILING	200	10"x10"	24"x24"	25	2-WAY 90°
CD-2	TITUS – MCD-AA	SUPPLY	GYP BOARD CEILING	700	14"x14"	16"x16"	25	1-WAY
WG-1	TITUS – 301FL	SUPPLY	SIDEWALL	225	12"x6"	14"x8"	20	
WG-2	TITUS – 301FL	SUPPLY	SIDEWALL	350	18"x6"	20"x8"	20	
EG-1	TITUS – 50F	EXHAUST	GYP BOARD CEILING	125	6"x6"	8"x8"	30	
WR-1	TITUS – 350FL	RETURN	SIDEWALL	400	16"x18"	18"x20"	30	
RG-1	TITUS – 8F	RETURN	LAY-IN CEILING	200	10"x10"	24"x24"	30	
RG-2	TITUS – 50F	RETURN	GYP BOARD CEILING	1450	6"x6"	8"x8"	20	

M-2

SPEC. NO. 5147

M-E Engineers, Inc.
3760 Convoy St. Suite 340
San Diego CA 92111
t.858.565.3900/f.858.565.3906
www.me-engineers.com

REGISTERED PROFESSIONAL ENGINEER LAWRENCE A. BROOKS NO. M16565 MECHANICAL STATE OF CALIFORNIA 10/07/14

PLANS FOR THE CONSTRUCTION OF
South Mission Beach Lifeguard Station

MECHANICAL SCHEDULES | M0.2

CITY OF SAN DIEGO, CALIFORNIA
ENGINEERING & CAPITAL PROJECTS
ARCHITECTURAL ENGINEERING & CONTRACTS DIVISION
SHEET 67 OF 94 SHEETS

WBS S-00791

FOR CITY ENGINEER 10/13/2014 DATE

SUBMITTED BY: JIHAD SLEIMAN, PROJECT MANAGER

DESCRIPTION	BY	APPROVED	DATE	FILMED
ORIGINAL	LAB			

YOUSIF BENYAMIN, PROJECT ENGINEER
216-1693 CCS27 COORDINATES
1858-6233 CCS83 COORDINATES

CONTRACTOR ______ DATE STARTED ______
INSPECTOR ______ DATE COMPLETED ______

32849-67-D

South Mission Beach Lifeguard Station
San Diego, California

Proprietary design. These drawings and design are protected by common law copyright. All patentable material contained herein and originating with Domusy + Associates Architects @ domusstudio LLP shall be the property of Domusy + Associates Architects @ domusstudio LLP

© COPYRIGHT October 07, 2014 at 2:55PM

PERFORMANCE CERTIFICATE OF COMPLIANCE (Part 1 of 3) PERF-1C

Project Name: South Mission Beach Lifeguard Station — Date: 5/1/2014

Project Address: 700 N. Jetty Rd. San Diego, CA — Climate Zone: CA Climate Zone 07 — Total Cond. Floor Area: 2,702 — Addition Floor Area: n/a

GENERAL INFORMATION

Building Type: ☑ Nonresidential ☐ High-Rise Residential ☐ Hotel/Motel Guest Room ☐ Relocatable - indicate specific climate zone ☐ all climates

Phase of Construction: ☑ New Construction ☐ Addition ☐ Alteration

STATEMENT OF COMPLIANCE

This certificate of compliance lists the building features and specifications needed to comply with Title 24, Parts 1 and 6 of the California Code of Regulations. This certificate applies only to a Building using the performance compliance approach.

The documentation author hereby certifies that the documentation is accurate and complete.

Documentation Author

Name: Ricky Sorrosalo — Signature: [signature]

Company: M-E Engineers, Inc. — Date: 5/1/2014

Address: 10113 Jefferson Blvd. — Phone: (310) 842-8700

City/State/Zip: Culver City, CA 90232

The Principal Designer hereby certifies that the proposed building design represented in this set of construction documents is consistent with the other compliance forms and worksheets, with the specifications, and with any other calculations submitted with this permit application. The proposed building has been designed to meet the energy efficiency requirements contained in sections 110, 116 through 118, and 140 through 149 of Title 24, Part 6. Please check one:

ENV.	LTG.	MECH.	
☐	☐	☒	I hereby affirm that I am eligible under the provisions of Division 3 of the Business and Professions Code to sign this document as the person responsible for its preparation; and that I am licensed in the State of California as a civil engineer, mechanical engineer, electrical engineer, or I am a licensed architect.
☐	☐	☐	I affirm that I am eligible under the provisions of Division 3 of the Business and Professions Code by section 5537.2 or 6737.3 to sign this document as the person responsible for its preparation; and that I am a licensed contractor performing this work.
☐	☐	☐	I affirm that I am eligible under Division 3 of the Business and Professions Code to sign this document because it pertains to a structure or type of work described as exempt pursuant to Business and Professions Code Sections 5537, 5538 and 6737.1.

Principal Envelope Designer

Name: Wayne Holtan — Signature: [signature]

Company: Domus Studio Architecture — Date: 10/13/14

Address: 2150 West Washington Suite 303 — License #: C12113

City/State/Zip: San Diego, CA 92110 — Phone: (619) 692-9393

Principal Mechanical Designer

Name: — Signature: Lawrence A. Brooks

Company: M-E Engineers, Inc. — Date: 10/07/2014

Address: 3760 Convoy Street — License #: M18060

City/State/Zip: San Diego, CA 92111 — Phone: (858) 565-3900

Principal Lighting Designer

Name: — Signature:

Company: Lighting Compliance Not In The Scope Of This Submittal — Date:

Address: — License #:

City/State/Zip: — Phone:

INSTRUCTIONS TO APPLICANT COMPLIANCE & WORKSHEETS (check box if worksheets are included)

☑	ENV-1C	Certificate of Compliance. Required on plans.	☑	MECH-1C	Certificate of Compliance. Required on plans.
☐	LTG-1C	Certificate of Compliance. Required on plans.	☑	MECH-2C	Air/Water Side/Service Hot Water & Pool Requirements.
☐	LTG-2C	Lighting Controls Credit Worksheet.	☑	MECH-3C	Mechanical Ventilation and Reheat.
☐	LTG-3C	Indoor Lighting Power Allowance.	☑	MECH-5C	Mechanical Equipment Details.

EnergyPro 5.1 by EnergySoft User Number: 7992 RunCode: 2014-05-01T15:51:25 ID: SD07007.00 Page 1 of 27

PERFORMANCE CERTIFICATE OF COMPLIANCE (Part 2 of 3) PERF-1C

Project Name: South Mission Beach Lifeguard Station — Date: 5/1/2014

ANNUAL TDV ENERGY USE SUMMARY (kBtu/sqft-yr)

Energy Component	Standard Design	Proposed Design	Compliance Margin
Space Heating	2.45	2.52	-0.08
Space Cooling	64.54	72.50	-7.99
Indoor Fans	77.32	74.50	2.77
Heat Rejection	0.00	0.00	0.00
Pumps & Misc.	0.00	0.00	0.00
Domestic Hot Water	50.57	35.82	[illegible]
Lighting	48.77	42.72	[illegible]
Receptacle	40.40	40.40	0.00
Process	[illegible]	[illegible]	0.00
Process Lighting	0.00	0.00	0.00
TOTALS	264.46	253.03	11.43
Percent better than Standard		[illegible]	22% excluding process

BUILDING COMPLIES

GENERAL INFORMATION

Building Orientation	(N) 0 deg	Conditioned Floor Area	2,702 sqft.
Number of Stories	3	Unconditioned Floor Area	0 sqft.
Number of Systems	3	Conditioned Footprint Area	[illegible] sqft.
Number of Zones	11	Natural Gas Available On Site	Yes

	Orientation	Gross Area	Glazing Area	Glazing Ratio
Front Elevation	(N)	[illegible] sqft.	294 sqft.	[illegible]
Left Elevation	(E)	[illegible] sqft.	45 sqft.	[illegible]
Rear Elevation	(S)	[illegible] sqft.	245 sqft.	[illegible]
Right Elevation	(W)	[illegible] sqft.	205 sqft.	[illegible]
Total		[illegible] sqft.	[illegible] sqft.	[illegible]
Roof		[illegible] sqft.	0 sqft.	0.0%

	Standard		Proposed		
Prescriptive Lighting Power Density	[illegible]	W/sqft.	[illegible]	W/sqft.	Prescriptive Values for Comparison only. See LTG-1C for allowed LPD.
Prescriptive Envelope TDV Energy	[illegible]		[illegible]		

Remarks:

EnergyPro 5.1 by EnergySoft User Number: 7992 RunCode: 2014-05-01T15:51:25 ID: SD07007.00 Page 2 of 27

PERFORMANCE CERTIFICATE OF COMPLIANCE (Part 3 of 3) PERF-1C

Project Name: South Mission Beach Lifeguard Station — Date: 5/1/2014

ZONE INFORMATION

System Name	Zone Name	Occupancy Type	Floor Area (sqft.)	Inst. LPD (W/sqft)[1]	Ctrl. Credits (W/sqft)[2]	Allowed LPD Area (W/sqft)[3]	Allowed LPD Tailored (W/sqft)[4]	Proc. Loads (W/sqft)
FC-1 (First Floor)	First Aid Room	Medical and Clinical Care	203	*1.200				
	Support	Corridor/Restroom/Support	518	*0.600				
RTU-1 (First Floor)	Reception	Lobby, Main Entry	240	*1.500				
	Locker Room	Locker/Dressing Room	616	*0.800				
	Support	Corridor/Restroom/Support	129	*0.600				
RTU-2 (Second Floor)	Ready Room	Office > 250 sqft	276	*0.900				
	Restroom	Corridor/Restroom/Support	55	*0.600				
	Admin	Office ≤ 250 sqft	105	*0.500				
	Stairs	All Others	295	*0.600				
	Observation Level	Office > 250 sqft	214	*0.900				
	Storage	All Others	40	*0.600				

Notes: 1. See LTG-1C (items marked with asterisk, see LTG-1C for others) 2. See LTG-2C 3. See LTG-3C (for others) 4. See LTG-4C — Items above require special documentation

EXCEPTIONAL CONDITIONS COMPLIANCE CHECKLIST

The local enforcement agency should pay special attention to the items specified in this checklist. These items require special written justification and documentation, and special verification to be used with the performance approach. The local enforcement agency determines the adequacy of the justifications, and may reject a building or design that otherwise complies based on the adequacy of the special justification and documentation submitted.

The exceptional features listed in this performance approach application have specifically been reviewed. Adequate written justification and documentation for their use have been provided by the applicant.

Authorized Signature or Stamp: ________________

EnergyPro 5.1 by EnergySoft User Number: 7992 RunCode: 2014-05-01T15:51:25 ID: SD07007.00 Page 3 of 27

CERTIFICATE OF COMPLIANCE AND FIELD INSPECTION ENERGY CHECKLIST (Part 1 of 3) ENV-1C

Project Name: South Mission Beach Lifeguard Station — Date: 5/1/2014

Project Address: 700 N. Jetty Rd. San Diego, CA — Climate Zone: 7 — Total Cond. Floor Area: 2,702 — Addition Floor Area: n/a

GENERAL INFORMATION

Building Type: ☑ Nonresidential ☐ High-Rise Residential ☐ Hotel/Motel Guest Room

☐ Schools (Public School) ☐ Relocatable Public School Bldg. ☑ Conditioned Spaces ☐ Unconditioned Spaces

☐ Skylight Area for Large Enclosed Space ≥ 8000 ft² (If checked include the ENV-4C with submittal)

Phase of Construction: ☑ New Construction ☐ Addition ☐ Alteration

Approach of Compliance: ☐ Component ☑ Overall Envelope ☐ Unconditioned (file affidavit)

Front Orientation: N, E, S, W or in Degrees: 0 deg

FIELD INSPECTION ENERGY CHECKLIST

OPAQUE SURFACE DETAILS / INSULATION

Tag/ID	Assembly Type	Area (ft²)	Orientation N, E, S, W	U-Factor	Cavity R-Value	Exterior R-Value	Exterior Furring[1]	Interior R-Value	Interior Furring[1]	Joint Appendix 4	Condition Status	Pass	Fail[2]
1	Roof	65	(N)	0.031	R-30					4.2.1-A20	New	☐	☐
2	Wall	84	(N)	0.740	None					4.3.6-F5	New	☐	☐
3	Door	21	(N)	1.450	None					4.5.1-A1	New	☐	☐
4	Wall	140	(S)	0.740	None					4.3.6-F5	New	☐	☐
5	Wall	104	(W)	0.740	None					4.3.6-F5	New	☐	☐
6	Slab	259	(N)	0.730	None					4.4.7-A1	New	☐	☐
7	Slab	170	(N)	0.730	None					4.4.7-A1	New	☐	☐
8	Slab	175	(N)	0.730	None					4.4.7-A1	New	☐	☐
9	Roof	110	(N)	0.031	R-30					4.2.1-A20	New	☐	☐
10	Wall	56	(N)	0.740	None					4.3.6-F5	New	☐	☐

1. See Instructions in the Nonresidential Compliance Manual, page 3-96.
2. If Fail, then describe on Page 2 of the Inspection Checklist Form and take appropriate action to correct. A fail does not meet compliance.

FENESTRATION SURFACE DETAILS

Tag/ID	Fenestration Type	Area (ft²)	Orientation N, E, S, W	Max U-Factor	U-Factor Source	Max (R)SHGC	SHGC Source	Overhang	Conditions Status	Pass	Fail[2]
1	Window	192	(N)	0.370	NFRC	0.290	NFRC	☐	New	☐	☐
2	Window	88	(W)	0.370	NFRC	0.290	NFRC	☐	New	☐	☐
3	Window	75	(S)	0.370	NFRC	0.290	NFRC	☐	New	☐	☐
4	Window	30	(N)	1.190	Default	0.830	Default	☑	New	☐	☐
5	Window	110	(S)	1.190	Default	0.830	Default	☑	New	☐	☐
6	Window	36	(W)	1.190	Default	0.830	Default	☑	New	☐	☐
7	Window	45	(E)	0.370	NFRC	0.290	NFRC	☐	New	☐	☐
8	Window	56	(N)	1.190	Default	0.830	Default	☑	New	☐	☐
9	Window	56	(S)	1.190	Default	0.830	Default	☑	New	☐	☐
10	Window	84	(W)	1.190	Default	0.830	Default	☑	New	☐	☐

1. See Instructions in the Nonresidential Compliance Manual, page 3-96.
2. If Fail then describe on Page 2 of the Inspection Checklist Form and take appropriate action to correct. Verify building plans if necessary.

EnergyPro 5.1 by EnergySoft User Number: 7992 RunCode: 2014-05-01T15:51:25 ID: SD07007.00 Page 4 of 27

CERTIFICATE OF COMPLIANCE AND FIELD INSPECTION ENERGY CHECKLIST (Part 1 of 3) ENV-1C

Project Name: South Mission Beach Lifeguard Station — Date: 5/1/2014

Project Address: 700 N. Jetty Rd. San Diego, CA — Climate Zone: 7 — Total Cond. Floor Area: 2,702 — Addition Floor Area: n/a

GENERAL INFORMATION

Building Type: ☑ Nonresidential ☐ High-Rise Residential ☐ Hotel/Motel Guest Room

☐ Schools (Public School) ☐ Relocatable Public School Bldg. ☑ Conditioned Spaces ☐ Unconditioned Spaces

☐ Skylight Area for Large Enclosed Space ≥ 8000 ft² (If checked include the ENV-4C with submittal)

Phase of Construction: ☑ New Construction ☐ Addition ☐ Alteration

Approach of Compliance: ☐ Component ☑ Overall Envelope ☐ Unconditioned (file affidavit)

Front Orientation: N, E, S, W or in Degrees: 0 deg

FIELD INSPECTION ENERGY CHECKLIST

OPAQUE SURFACE DETAILS / INSULATION

Tag/ID	Assembly Type	Area (ft²)	Orientation N, E, S, W	U-Factor	Cavity R-Value	Exterior R-Value	Exterior Furring[1]	Interior R-Value	Interior Furring[1]	Joint Appendix 4	Condition Status	Pass	Fail[2]
11	Door	42	(N)	1.450	None					4.5.1-A1	New	☐	☐
12	Wall	3	(S)	0.740	None					4.3.6-F5	New	☐	☐
13	Door	42	(S)	1.450	None					4.5.1-A1	New	☐	☐
14	Slab	235	(N)	0.730	None					4.4.7-A1	New	☐	☐
15	Roof	305	(N)	0.031	R-30					4.2.1-A20	New	☐	☐
16	Wall	210	(N)	0.740	None					4.3.6-F5	New	☐	☐
17	Wall	51	(E)	0.740	None					4.3.6-F5	New	☐	☐
18	Wall	51	(W)	0.740	None					4.3.6-F5	New	☐	☐
19	Slab	250	(N)	0.730	None					4.4.7-A1	New	☐	☐
20	Roof	308	(N)	0.031	R-30					4.2.1-A20	New	☐	☐

1. See Instructions in the Nonresidential Compliance Manual, page 3-96.
2. If Fail, then describe on Page 2 of the Inspection Checklist Form and take appropriate action to correct. A fail does not meet compliance.

FENESTRATION SURFACE DETAILS

Tag/ID	Fenestration Type	Area (ft²)	Orientation N, E, S, W	Max U-Factor	U-Factor Source	Max (R)SHGC	SHGC Source	Overhang	Conditions Status	Pass	Fail[2]
								☐		☐	☐
								☐		☐	☐
								☐		☐	☐
								☐		☐	☐
								☐		☐	☐
								☐		☐	☐
								☐		☐	☐
								☐		☐	☐
								☐		☐	☐
								☐		☐	☐

1. See Instructions in the Nonresidential Compliance Manual, page 3-96.
2. If Fail then describe on Page 2 of the Inspection Checklist Form and take appropriate action to correct. Verify building plans if necessary.

EnergyPro 5.1 by EnergySoft User Number: 7992 RunCode: 2014-05-01T15:51:25 ID: SD07007.00 Page 5 of 27

CERTIFICATE OF COMPLIANCE AND FIELD INSPECTION ENERGY CHECKLIST (Part 1 of 3) ENV-1C

Project Name: South Mission Beach Lifeguard Station — Date: 5/1/2014

Project Address: 700 N. Jetty Rd. San Diego, CA — Climate Zone: 7 — Total Cond. Floor Area: 2,702 — Addition Floor Area: n/a

GENERAL INFORMATION

Building Type: ☑ Nonresidential ☐ High-Rise Residential ☐ Hotel/Motel Guest Room

☐ Schools (Public School) ☐ Relocatable Public School Bldg. ☑ Conditioned Spaces ☐ Unconditioned Spaces

☐ Skylight Area for Large Enclosed Space ≥ 8000 ft² (If checked include the ENV-4C with submittal)

Phase of Construction: ☑ New Construction ☐ Addition ☐ Alteration

Approach of Compliance: ☐ Component ☑ Overall Envelope ☐ Unconditioned (file affidavit)

Front Orientation: N, E, S, W or in Degrees: 0 deg

FIELD INSPECTION ENERGY CHECKLIST

OPAQUE SURFACE DETAILS / INSULATION

Tag/ID	Assembly Type	Area (ft²)	Orientation N, E, S, W	U-Factor	Cavity R-Value	Exterior R-Value	Exterior Furring[1]	Interior R-Value	Interior Furring[1]	Joint Appendix 4	Condition Status	Pass	Fail[2]
21	Wall	210	(S)	0.740	None					4.3.6-F5	New	☐	☐
22	Slab	250	(N)	0.730	None					4.4.7-A1	New	☐	☐
23	Roof	35	(N)	0.031	R-30					4.2.1-A20	New	☐	☐
24	Slab	55	(N)	0.730	None					4.4.7-A1	New	☐	☐
25	Roof	55	(N)	0.031	R-30					4.2.1-A20	New	☐	☐
26	Slab	55	(N)	0.730	None					4.4.7-A1	New	☐	☐
27	Slab	39	(N)	0.730	None					4.4.7-A1	New	☐	☐
28	Roof	70	(N)	0.031	R-30					4.2.1-A20	New	☐	☐
29	Wall	190	(N)	0.740	None					4.3.6-F5	New	☐	☐
30	Wall	196	(S)	0.740	None					4.3.6-F5	New	☐	☐

1. See Instructions in the Nonresidential Compliance Manual, page 3-96.
2. If Fail, then describe on Page 2 of the Inspection Checklist Form and take appropriate action to correct. A fail does not meet compliance.

FENESTRATION SURFACE DETAILS

Tag/ID	Fenestration Type	Area (ft²)	Orientation N, E, S, W	Max U-Factor	U-Factor Source	Max (R)SHGC	SHGC Source	Overhang	Conditions Status	Pass	Fail[2]
								☐		☐	☐
								☐		☐	☐
								☐		☐	☐
								☐		☐	☐
								☐		☐	☐
								☐		☐	☐
								☐		☐	☐
								☐		☐	☐
								☐		☐	☐
								☐		☐	☐

1. See Instructions in the Nonresidential Compliance Manual, page 3-96.
2. If Fail then describe on Page 2 of the Inspection Checklist Form and take appropriate action to correct. Verify building plans if necessary.

EnergyPro 5.1 by EnergySoft User Number: 7992 RunCode: 2014-05-01T15:51:25 ID: SD07007.00 Page 6 of 27

CERTIFICATE OF COMPLIANCE AND FIELD INSPECTION ENERGY CHECKLIST (Part 1 of 3) ENV-1C

Project Name: South Mission Beach Lifeguard Station — Date: 5/1/2014

Project Address: 700 N. Jetty Rd. San Diego, CA — Climate Zone: 7 — Total Cond. Floor Area: 2,702 — Addition Floor Area: n/a

GENERAL INFORMATION

Building Type: ☑ Nonresidential ☐ High-Rise Residential ☐ Hotel/Motel Guest Room

☐ Schools (Public School) ☐ Relocatable Public School Bldg. ☑ Conditioned Spaces ☐ Unconditioned Spaces

☐ Skylight Area for Large Enclosed Space ≥ 8000 ft² (If checked include the ENV-4C with submittal)

Phase of Construction: ☑ New Construction ☐ Addition ☐ Alteration

Approach of Compliance: ☐ Component ☑ Overall Envelope ☐ Unconditioned (file affidavit)

Front Orientation: N, E, S, W or in Degrees: 0 deg

FIELD INSPECTION ENERGY CHECKLIST

OPAQUE SURFACE DETAILS / INSULATION

Tag/ID	Assembly Type	Area (ft²)	Orientation N, E, S, W	U-Factor	Cavity R-Value	Exterior R-Value	Exterior Furring[1]	Interior R-Value	Interior Furring[1]	Joint Appendix 4	Condition Status	Pass	Fail[2]
31	Wall	11	(W)	0.740	None					4.3.6-F5	New	☐	☐
32	Roof	55	(N)	0.031	R-30					4.2.1-A20	New	☐	☐
33	Roof	105	(N)	0.031	R-30					4.2.1-A20	New	☐	☐
34	Wall	21	(N)	0.740	None					4.3.6-F5	New	☐	☐
35	Wall	60	(E)	0.740	None					4.3.6-F5	New	☐	☐
36	Wall	11	(S)	0.740	None					4.3.6-F5	New	☐	☐
37	Roof	206	(N)	0.031	R-30					4.2.1-A20	New	☐	☐
38	Wall	205	(S)	0.740	None					4.3.6-F5	New	☐	☐
39	Roof	214	(N)	0.031	R-30					4.2.1-A20	New	☐	☐
40	Wall	234	(N)	0.740	None					4.3.6-F5	New	☐	☐

1. See Instructions in the Nonresidential Compliance Manual, page 3-96.
2. If Fail, then describe on Page 2 of the Inspection Checklist Form and take appropriate action to correct. A fail does not meet compliance.

FENESTRATION SURFACE DETAILS

Tag/ID	Fenestration Type	Area (ft²)	Orientation N, E, S, W	Max U-Factor	U-Factor Source	Max (R)SHGC	SHGC Source	Overhang	Conditions Status	Pass	Fail[2]
								☐		☐	☐
								☐		☐	☐
								☐		☐	☐
								☐		☐	☐
								☐		☐	☐
								☐		☐	☐
								☐		☐	☐
								☐		☐	☐
								☐		☐	☐
								☐		☐	☐

1. See Instructions in the Nonresidential Compliance Manual, page 3-96.
2. If Fail then describe on Page 2 of the Inspection Checklist Form and take appropriate action to correct. Verify building plans if necessary.

EnergyPro 5.1 by EnergySoft User Number: 7992 RunCode: 2014-05-01T15:51:25 ID: SD07007.00 Page 7 of 27

South Mission Beach Lifeguard Station
San Diego, California

M-3

SPEC. NO. 8147

me engineers — M-E Engineers, Inc. 3760 Convoy St. Suite 340 San Diego CA 92111 t.858.565.3900 / f.858.565.3906 www.me-engineers.com

REGISTERED PROFESSIONAL ENGINEER LAWRENCE A. BROOKS NO. M18060 MECHANICAL STATE OF CALIFORNIA 10/07/14

PLANS FOR THE CONSTRUCTION OF
South Mission Beach Lifeguard Station

MECHANICAL TITLE 24 SHEETS — M0.3

CITY OF SAN DIEGO, CALIFORNIA
ENGINEERING & CAPITAL PROJECTS
ARCHITECTURAL ENGINEERING & CONTRACTS DIVISION
SHEET 68 OF 94 SHEETS

WBS S-00791

FOR CITY ENGINEER — DATE 10/13/2014

SUBMITTED BY: JIHAD SLEIMAN, PROJECT MANAGER

YOUSIF BENYAMIN, PROJECT ENGINEER

DESCRIPTION	BY	APPROVED	DATE	FILMED
ORIGINAL	LAB			

218-1663 CCS27 COORDINATES

1838-6253 CCS83 COORDINATES

CONTRACTOR ______ DATE STARTED ______
INSPECTOR ______ DATE COMPLETED ______

32849-68-D

CERTIFICATE OF COMPLIANCE AND FIELD INSPECTION ENERGY CHECKLIST (Part 1 of 3) ENV-1C

Project Name			Date
South Mission Beach Lifeguard Station			5/1/2014
Project Address	**Climate Zone**	**Total Cond. Floor Area**	**Addition Floor Area**
700 N. Jetty Rd. San Diego, CA	7	2,702	n/a

GENERAL INFORMATION

Building Type: ☐ Nonresidential ☐ High-Rise Residential ☐ Hotel/Motel Guest Room

☐ Schools (Public School) ☐ Relocatable Public School Bldg. ☐ Conditioned Spaces ☐ Unconditioned Spaces

☐ Skylight Area for Large Enclosed Space ≥ 8000 ft² (if checked include the ENV-4C with submittal)

Phase of Construction: ☐ New Construction ☐ Addition ☐ Alteration

Approach of Compliance: ☐ Component ☐ Overall Envelope ☐ Unconditioned (file affidavit)

Front Orientation: N, E, S, W or in Degrees: 0 deg

FIELD INSPECTION ENERGY CHECKLIST

OPAQUE SURFACE DETAILS / INSULATION

Tag/ID	Assembly Type	Area (ft²)	Orientation (N, E, S, W)	U-Factor	Cavity R-Value	Exterior R-Value	Exterior Furring	Interior R-Value	Interior Furring	Joint Appendix 4	Condition Status	Pass	Fail
41	Wall	89	180	0.740	None					4.3.6-F5	New	☐	☐
42	Wall	66	315	0.740	None					4.3.6-F5	New	☐	☐
43	Roof	140	170	0.037	R-30					4.2.1-A30	New	☐	☐
44	Wall	255	180	0.740	None					4.3.6-F5	New	☐	☐

1. See instructions in the Nonresidential Compliance Manual, page 2-9%.
2. If Fail, then describe on Page 2 of the Inspection Checklist Form and take appropriate action to correct. A fail does not mean compliance.

FENESTRATION SURFACE DETAILS

Tag/ID	Fenestration Type	Area (ft²)	Orientation N, E, S, W	Max U-factor	U-Factor Source	Max SHGC	SHGC Source	Overhang	Condition Status	Pass	Fail

1. See instructions in the Nonresidential Compliance Manual, page 3-93.
2. If Fail then describe on Page 2 of the Inspection Checklist Form and take appropriate action to correct. Verify building plans if necessary.

CERTIFICATE OF COMPLIANCE AND FIELD INSPECTION ENERGY CHECKLIST (Part 2 of 3) ENV-1C

Project Name: South Mission Beach Lifeguard Station — Date: 5/1/2014

ROOFING PRODUCT (COOL ROOFS)

Discrepancies:

CERTIFICATE OF COMPLIANCE AND FIELD INSPECTION ENERGY CHECKLIST (Part 3 of 3) ENV-1C

Project Name: South Mission Beach Lifeguard Station — Date: 5/1/2014

Required Acceptance Tests

Designer:

This form is to be used by the designer and attached to the plans. Listed below is the acceptance test for Envelope Fenestrations system. The designer is required to check the acceptance tests and list all the fenestration products that require an acceptance test. If all the site-built fenestration of a certain type requires a test, list the different fenestration products and the number of systems. The NA7 Section in the Appendix of the Nonresidential Reference Appendices Manual describes the test. Since this form will be part of the plans, completion of this section will allow the responsible party to budget for the scope of work appropriately.

Enforcement Agency:

Systems Acceptance. Before Occupancy Permit is granted for a newly constructed building or space or whenever new fenestration is installed in the building or space shall be certified as meeting the Acceptance Requirements. The ENV-2A form is not considered a complete form and is not to be accepted by the enforcement agency unless the boxes are checked and/or filled and signed. In addition, a Certificate of Acceptance forms shall be submitted to the enforcement agency that certifies plans, specifications, installation certificates, and operating and maintenance information meet the requirements of §10-103(b) of Title 24 Part 6. The field inspector must receive the properly filled out and signed forms before the building can receive final occupancy. A copy of the ENV-2A for each different fenestration product line must be provided to the owner of the building for their records.

Test Description: Fenestration Products Name or ID Requiring Testing or Verification	Area of the Products	ENV-2A Building Envelope Acceptance Test	Test Performed By:
Double Pane Glazing	487	☑	
Single Pane Glass	378	☑	

CERTIFICATE OF COMPLIANCE and FIELD INSPECTION ENERGY CHECKLIST (Part 1 of 4) MECH-1C

Project Name			Date
South Mission Beach Lifeguard Station			5/1/2014
Project Address	**Climate Zone**	**Total Cond. Floor Area**	**Addition Floor Area**
700 N. Jetty Rd. San Diego, CA	7	2,702	n/a

GENERAL INFORMATION

Building Type: ☐ Nonresidential ☐ High-Rise Residential ☐ Hotel/Motel Guest Room

☐ Schools (Public School) ☐ Relocatable Public School Bldg. ☐ Conditioned Spaces ☐ Unconditioned Spaces (affidavit)

Phase of Construction: ☐ New Construction ☐ Addition ☐ Alteration

Approach of Compliance: ☐ Component ☐ Overall Envelope TDV Energy ☐ Unconditioned (file affidavit)

Front Orientation: N, E, S, W or in Degrees: 0 deg

HVAC SYSTEM DETAILS

Equipment[2]	Inspection Criteria	Pass	Fail – Describe Reason[2]
Item or System Tags (i.e. AC-1, RTU-1, HP-1)	DHW Heater	☐	☐
Equipment Type[3]	Electric Res DHW Boiler	☐	☐
Number of Systems	1	☐	☐
Max Allowed Heating Capacity[1]	15,358 Btu/hr	☐	☐
Minimum Heating Efficiency[1]	0.93 EF	☐	☐
Max Allowed Cooling Capacity[1]	n/a	☐	☐
Cooling Efficiency[1]	n/a	☐	☐
Duct Location/ R-Value	n/a	☐	☐
When duct testing is required, submit MECH-4A & MECH-4-HERS	n/a	☐	☐
Economizer	n/a	☐	☐
Thermostat	n/a	☐	☐
Fan Control	n/a	☐	☐

Equipment[2]	Inspection Criteria	Pass	Fail – Describe Reason[2]
Item or System Tags (i.e. AC-1, RTU-1, HP-1)	FC-1 (First Floor)	☐	☐
Equipment Type[3]	Split DX	☐	☐
Number of Systems	1	☐	☐
Max Allowed Heating Capacity[1]	19,700 Btu/hr	☐	☐
Minimum Heating Efficiency[1]	8.00 HSPF	☐	☐
Max Allowed Cooling Capacity[1]	17,900 Btu/hr	☐	☐
Cooling Efficiency[1]	14.0 SEER / 11.4 EER	☐	☐
Duct Location/ R-Value	Attic, Ceiling Ins, vented / 4.2	☐	☐
When duct testing is required, submit MECH-4A & MECH-4-HERS	No	☐	☐
Economizer	No Economizer	☐	☐
Thermostat	Setback Required	☐	☐
Fan Control	Constant Volume	☐	☐

1. If the Actual installed equipment performance efficiency and capacity is less than the Proposed (from the energy compliance submittal or from the building plans) the responsible party shall resubmit energy compliance to include the new changes.
2. For additional detailed discrepancy use Page 2 of the Inspection Checklist Form. Compliance fails if a Fail box is checked.
3. Indicate Equipment Type: Gas (Pkg or Split), VAV, HP (Pkg or split), Hydronic, PTAC, or other.

CERTIFICATE OF COMPLIANCE and FIELD INSPECTION ENERGY CHECKLIST (Part 1 of 4) MECH-1C

Project Name			Date
South Mission Beach Lifeguard Station			5/1/2014
Project Address	**Climate Zone**	**Total Cond. Floor Area**	**Addition Floor Area**
700 N. Jetty Rd. San Diego, CA	7	2,702	n/a

GENERAL INFORMATION

Building Type: ☐ Nonresidential ☐ High-Rise Residential ☐ Hotel/Motel Guest Room

☐ Schools (Public School) ☐ Relocatable Public School Bldg. ☐ Conditioned Spaces ☐ Unconditioned Spaces (affidavit)

Phase of Construction: ☐ New Construction ☐ Addition ☐ Alteration

Approach of Compliance: ☐ Component ☐ Overall Envelope TDV Energy ☐ Unconditioned (file affidavit)

Front Orientation: N, E, S, W or in Degrees: 0 deg

HVAC SYSTEM DETAILS

Equipment[2]	Inspection Criteria	Pass	Fail – Describe Reason[2]
Item or System Tags (i.e. AC-1, RTU-1, HP-1)	RTU-1 (First Floor)	☐	☐
Equipment Type[3]	Packaged DX	☐	☐
Number of Systems	1	☐	☐
Max Allowed Heating Capacity[1]	27,000 Btu/hr	☐	☐
Minimum Heating Efficiency[1]	7.70 HSPF	☐	☐
Max Allowed Cooling Capacity[1]	29,200 Btu/hr	☐	☐
Cooling Efficiency[1]	13.0 SEER / 11.3 EER	☐	☐
Duct Location/ R-Value	Attic, Ceiling Ins, vented / 4.2	☐	☐
When duct testing is required, submit MECH-4A & MECH-4-HERS	No	☐	☐
Economizer	No Economizer	☐	☐
Thermostat	Setback Required	☐	☐
Fan Control	Constant Volume	☐	☐

Equipment[2]	Inspection Criteria	Pass	Fail – Describe Reason[2]
Item or System Tags (i.e. AC-1, RTU-1, HP-1)	RTU-2 (Second Floor)	☐	☐
Equipment Type[3]	Packaged DX	☐	☐
Number of Systems	1	☐	☐
Max Allowed Heating Capacity[1]	53,000 Btu/hr	☐	☐
Minimum Heating Efficiency[1]	8.00 HSPF	☐	☐
Max Allowed Cooling Capacity[1]	56,700 Btu/hr	☐	☐
Cooling Efficiency[1]	14.0 SEER / 12.0 EER	☐	☐
Duct Location/ R-Value	Attic, Ceiling Ins, vented / 4.2	☐	☐
When duct testing is required, submit MECH-4A & MECH-4-HERS	No	☐	☐
Economizer	No Economizer	☐	☐
Thermostat	Setback Required	☐	☐
Fan Control	Constant Volume	☐	☐

1. If the Actual installed equipment performance efficiency and capacity is less than the Proposed (from the energy compliance submittal or from the building plans) the responsible party shall resubmit energy compliance to include the new changes.
2. For additional detailed discrepancy use Page 2 of the Inspection Checklist Form. Compliance fails if a Fail box is checked.
3. Indicate Equipment Type: Gas (Pkg or Split), VAV, HP (Pkg or split), Hydronic, PTAC, or other.

CERTIFICATE OF COMPLIANCE and FIELD INSPECTION ENERGY CHECKLIST (Part 2 of 4) MECH-1C

Project Name: South Mission Beach Lifeguard Station — Date: 5/1/2014

Discrepancies:

CERTIFICATE OF COMPLIANCE and FIELD INSPECTION ENERGY CHECKLIST (Part 3 of 4) MECH-1C

Project Name: South Mission Beach Lifeguard Station — Date: 5/1/2014

Required Acceptance Tests

Designer:

Building Departments:

South Mission Beach Lifeguard Station
San Diego, California

M–4

SPEC. NO. 8147

M-E Engineers, Inc.
3760 Convoy St. Suite 340
San Diego CA 92111
t 858.565.3300 / f 858.565.3906
www.me-engineers.com

REGISTERED PROFESSIONAL ENGINEER — MECHANICAL — STATE OF CALIFORNIA — 10/07/14

PLANS FOR THE CONSTRUCTION OF
South Mission Beach Lifeguard Station

MECHANICAL TITLE 24 SHEETS — M0.4

CITY OF SAN DIEGO, CALIFORNIA
ENGINEERING & CAPITAL PROJECTS
ARCHITECTURAL ENGINEERING & CONTRACTS DIVISION
SHEET 52 OF 94 SHEETS

WBS S-00791

FOR CITY ENGINEER — DATE 10/13/2014

SUBMITTED BY: JIHAD SLEIMAN, PROJECT MANAGER

DESCRIPTION	BY	APPROVED	DATE	FILMED
ORIGINAL	L A B			

YOUSIF BENYAMIN — PROJECT ENGINEER

218-1693 — CCS27 COORDINATES

1858-6253 — CCS83 COORDINATES

CONTRACTOR ______ DATE STARTED ______
INSPECTOR ______ DATE COMPLETED ______

32849–69–D

CERTIFICATE OF COMPLIANCE and FIELD INSPECTION ENERGY CHECKLIST (Part 4 of 4) MECH-1C

Project Name: South Mission Beach Lifeguard Station — Date: 5/1/2014

TEST DESCRIPTION	Qty	MECH-10A Fault Detection & Diagnostics for DX Units	MECH-11A Automatic Fault Detection & Diagnostics for Air & Zone	MECH-14A Distributed Energy Storage DX AC Systems	MECH-15A Thermal Energy Storage (TES) Systems	Test Performed By:
Equipment Requiring Testing						
FC-1/CU-1	1	☐	☐	☐	☐	
RTU-1	1	☐	☐	☐	☐	
RTU-2 BRH/2(?)	1	☐	☐	☐	☐	

EnergyPro 5.1 by EnergySoft — User Number: 7922 — RunCode: 2014-05-01T15:51:25 — ID: S007007.00 — Page 15 of 27

AIR SYSTEM REQUIREMENTS (Part 1 of 2) MECH-2C

Project Name: South Mission Beach Lifeguard Station — Date: 5/1/2014

Item or System Tags (i.e. AC-1, RTU-1, HP-1)		FC-1 (First Floor)	RTU-1 (First Floor)	RTU-2 (Second Floor)
Number of Systems		1	1	1
MANDATORY MEASURES	T-24 Sections			
Heating Equipment Efficiency	112(a)	8.00 HSPF	7.70 HSPF	8.00 HSPF
Cooling Equipment Efficiency	112(a)	14.0 SEER / 11.4 EER	13.0 SEER / 11.3 EER	14.0 SEER / 12.0 EER
HVAC Heat Pump Thermostat	112(b), 115(a)	Yes	Yes	Yes
Furnace Controls/Thermostat	112(c), 115(a)	n/a	n/a	n/a
Natural Ventilation	121(b)	Yes	Yes	Yes
Mechanical Ventilation	121(b)	75 cfm	579 cfm	30 cfm
VAV Minimum Position Control	121(c)	No	No	No
Demand Control Ventilation	121(c)	No	No	No
Time Control	122(e)	Programmable Switch	Programmable Switch	Programmable Switch
Setback and Setup Control	122(e)	Setback Required	Setback Required	Setback Required
Outdoor Damper Control	122(f)	Auto	Auto	Auto
Isolation Zones	122(g)	n/a	n/a	n/a
Pipe Insulation	123			
Duct Location/ R-value	124	Attic, Ceiling Ins, vented / 4.2	Attic, Ceiling Ins, vented / 4.2	Attic, Ceiling Ins, vented / 4.2
PRESCRIPTIVE MEASURES				
Calculated Design Heating Load	144(a & b)	n/a	n/a	n/a
Proposed Heating Capacity	144(a & b)	16,435 Btu/hr	23,275 Btu/hr	44,267 Btu/hr
Calculated Design Cooling Load	144(a & b)	n/a	n/a	n/a
Proposed Cooling Capacity	144(a & b)	[illegible] Btu/hr	27,390 Btu/hr	[illegible] Btu/hr
Fan Control	144(c)	Constant Volume	Constant Volume	Constant Volume
DP Sensor Location	144(c)			
Supply Pressure Reset (DDC only)	144(c)	Yes	Yes	Yes
Simultaneous Heat/Cool	144(d)	No	No	No
Economizer	144(e)	No Economizer	No Economizer	No Economizer
Heat Air Supply Reset	144(f)	Constant Temp	Constant Temp	Constant Temp
Cool Air Supply Reset	144(f)	Constant Temp	Constant Temp	Constant Temp
Electric Resistance Heating[1]	144(g)			
Air Cooled Chiller Limitation	144(i)			
Duct Leakage Sealing. If Yes, a MECH-4-A must be submitted	144(k)	No	No	No

1. Total installed capacity (MBtu/hr) of all electric heat on this project exclusive of electric auxiliary heat for heat pumps. If electric heat is used explain which exception(s) to §144(g) apply.

EnergyPro 5.1 by EnergySoft — User Number: 7922 — RunCode: 2014-05-01T15:51:25 — ID: S007007.00 — Page 16 of 27

WATER SIDE SYSTEM REQUIREMENTS (Part 2 of 2) MECH-2C

Project Name: South Mission Beach Lifeguard Station — Date: 5/1/2014

Item or System Tags (i.e. AC-1, RTU-1, HP-1)[1]	WATER SIDE SYSTEMS: Chillers, Towers, Boilers, Hydronic Loops		
Number of Systems			
MANDATORY MEASURES	T-24 Sections	Indicate Page Reference on Plans or Specification[2]	
Equipment Efficiency	112(a)		
Pipe Insulation	123		
PRESCRIPTIVE MEASURES			
Cooling Tower Fan Controls	144(h)2 A		
Cooling Tower Flow Controls	144(h)		
Variable Flow System Design	144(j)		
Chiller and Boiler Isolation	144(j)		
CHW and HHW Reset Controls	144(j)		
WLHP Isolation Valves	144(j)		
VSD on CHW, CW & WLHP Pumps >5HP	144(j)		
DP Sensor Location	144(j)		

1. If the proposed equipment need to match the building plans schedule or specifications. If a requirement is not applicable, put "N/A" in the column next to applicable section.
2. For each chiller, cooling tower, boiler and hydronic loop for groups of similar equipment fill in the reference to sheet number and/or specification section and paragraph number where the required features are documented. If a requirement is not applicable, put "N/A" in the column next to applicable section.

Item or System Tags (i.e. WH-1, HWP, BOIL, etc.)[1]	Service Hot Water, Pool Heating	
	DHW Heater	
Number of Systems	1	
MANDATORY MEASURES	T-24 Sections	Indicate Page Reference on Plans or Schedule[2]
SERVICE HOT WATER		
Certified Water Heater	111, 113(a)	A.O.Smith DRE-52
Water Heater Efficiency	113(b)	0.93 EF
Service Water Heating Installation	113(c)	Controls Req.
Pipe Insulation	123	Required
POOL AND SPA		
Pool and Spa Efficiency and Control	114(a)	n/a
Pool and Spa Installation	114(b)	n/a
Pool Heater – No Pilot Light	114(c)	n/a
Spa Heater – No Pilot Light	115(d)	n/a
Pipe Insulation	123	n/a

1. If the proposed equipment needs to match the building plans schedule or specifications. If a requirement is not applicable, put "N/A" in the column next to applicable section.
2. For each water heater, pool heater and domestic water system (or groups of similar equipment) fill in the reference to sheet number and/or specification section and paragraph number where the required features are documented. If a requirement is not applicable, put "N/A" in the column.

EnergyPro 5.1 by EnergySoft — User Number: 7922 — RunCode: 2014-05-01T15:51:25 — ID: S007007.00 — Page 17 of 27

MECHANICAL VENTILATION AND REHEAT MECH-3C

Project Name: South Mission Beach Lifeguard Station — Date: 5/1/2014

Zone/System	Condition Area (ft²)	CFM per ft²	Min CFM by Area B X C	Number of People	CFM per Person	Min CFM by Occupant E X F	REQ'D V.A. Max of D or G	Design Ventilation Air CFM	Transfer Air
First Aid Room	283	0.15	42	3.0	15.0	45	45	45	
Storage	518	0.15	78	2.0	15.0	30	78	30	47
FC-1 (First Floor)						Total	123	75	
Reception	230	0.15	35	3.0	15.0	45	45	45	
Lockers/Locker	518	0.15	78	10.0	50.0	500	500	500	
Storage	123	0.15	18	2.0	15.0	30	30	30	
RTU-1 (First Floor)						Total	575	579	
Ready Room	218	0.15	33				33	30	11
Restroom	65	0.15	10				10	0	8
Alarm	103	0.15	15				15	15	
Stair	208	0.15	31				31	0	31
Observation Level	214	0.15	32				32	30	2
Storage	40	0.15	6				6	10	
RTU-2 (Second Floor)						Total	130	30	

Column D: Minimum ventilation rate per Section §121, Table 121-A. — Column E: Based on fixed seat or the greater of the expected number of occupants and 50% of the CBC occupant load for egress purposes for spaces without fixed seating. — Column H: Required Ventilation Air (REQ'D V.A.) is the larger of the ventilation rates calculated on an AREA BASIS or OCCUPANCY BASIS (Column D or G). — Column I: Must be greater than or equal to H, or use Transfer Air (Column N) to make up the difference.

EnergyPro 5.1 by EnergySoft — User Number: 7922 — RunCode: 2014-05-01T15:51:25 — ID: S007007.00 — Page 18 of 27

MECHANICAL EQUIPMENT DETAILS (Part 1 of 2) MECH-5C

Project Name: South Mission Beach Lifeguard Station — Date: 5/1/2014

CHILLER AND TOWER SUMMARY

Equipment Name	Type	Qty.	Efficiency	Tons	Qty.	GPM	BHP	Pump Control

DHW / BOILER SUMMARY

System Name	Type	Distribution	Qty.	Rated Input	Vol. (Gals.)	Energy Factor or RE	Standby Loss or Pilot	Tank Ext. R-Value	Status
A.O.Smith DRE-52	Small Elec	Kitchen Pipe Ins	1	15,358	119	0.93	n/a	n/a	New

MULTI-FAMILY CENTRAL WATER HEATING DETAILS

Control	Hot Water Pump Qty.	HP	Type	In Plenum	Outside	Buried	Add 1/2" Insulation
							☐ ☐ ☐

CENTRAL SYSTEM RATINGS

System Name	Type	Qty.	Heating Output	Aux. kW	Efficiency	Cooling Output	Efficiency	Status
FC-1/CU-1	Split HP	1	16,435	0.0	8.00 HSPF	17,400	14.0 SEER / 11.4 EER	New
RTU-1	Packaged DX	1	23,275	0.0	7.70 HSPF	24,000	13.0 SEER / 11.3 EER	New
RTU-2 BRH/2	Packaged DX	1	44,267	0.0	8.00 HSPF	57,100	14.0 SEER / 12.0 EER	New

CENTRAL SYSTEM FAN SUMMARY

System Name	Fan Type	Economizer Type	Supply Fan CFM	Supply Fan BHP	Return Fan CFM	Return Fan BHP
FC-1/CU-1	Constant Volume	No Economizer	450	0.30	None	
RTU-1	Constant Volume	No Economizer	800	0.50	None	
RTU-2 BRH/2	Constant Volume	No Economizer	2,000	0.80	None	

EnergyPro 5.1 by EnergySoft — User Number: 7922 — RunCode: 2014-05-01T15:51:25 — ID: S007007.00 — Page 19 of 27

ENVELOPE MANDATORY MEASURES: NONRESIDENTIAL ENV-MM

Project Name: South Mission Beach Lifeguard Station — Date: 5/1/2014

DESCRIPTION

Building Envelope Measures:

§118(a):	Installed insulating material shall have been certified by the manufacturer to comply with the California Quality Standards for insulating material, Title 20, Chapter 4, Article 3.
§118(c):	All Insulating Materials shall be installed in compliance with the flame spread rating and smoke density requirements of Sections 2602 and 707 of Title 24, Part 2.
§118(f):	The opaque portions of framed demising walls in nonresidential buildings shall have insulation with an installed R-value of no less than R-13 between framing members.
§117(a):	All Exterior Joints and openings in the building that are observable sources of air leakage shall be caulked, gasketed, weatherstripped or otherwise sealed.
§116(a) 1:	Manufactured fenestration products and exterior doors shall have air infiltration rates not exceeding 0.3 cfm/ft² of window area, 0.3 cfm/ft² of door area for residential doors, 0.3 cfm/ft² of door area for nonresidential single doors (swinging and sliding), and 1.0 cfm/ft² for nonresidential double doors (swinging).
§116(a) 2:	Fenestration U-factor shall be rated in accordance with NFRC 100, or the applicable default U-factor.
§116(a) 3:	Fenestration SHGC shall be rated in accordance with NFRC 200, or NFRC 100 for site-built fenestration, or the applicable default SHGC.
§116(b):	Site Constructed Doors, Windows and Skylights shall be caulked between the unit and the building, and shall be weatherstripped (except for unframed glass doors and fire doors).

EnergyPro 5.1 by EnergySoft — User Number: 7922 — RunCode: 2014-05-01T15:51:25 — ID: S007007.00 — Page 20 of 27

MECHANICAL MANDATORY MEASURES: NONRESIDENTIAL MECH-MM

Project Name: South Mission Beach Lifeguard Station — Date: 5/1/2014

Equipment and System Efficiencies

§111:	Any appliance for which there is a California standard established in the Appliance Efficiency Regulations will comply with the applicable standard.
§115(a):	Fan type central furnaces shall not have a pilot light.
§123:	Piping, except that conveying fluids at temperatures between 60 and 105 degrees Fahrenheit, or within HVAC equipment, shall be insulated in accordance with Standards Section 123.
§124:	Air handling duct systems shall be installed and insulated in compliance with Sections 601, 602, 603, 604, and 605 of the CMC Standards.

Controls

§122(e):		Each space conditioning system shall be installed with one of the following:
	1A.	Each space conditioning system serving building types such as offices and manufacturing facilities (and all others not explicitly exempt from the requirements of Section 112 (d)) shall be installed with an automatic time switch with an accessible manual override that allows operation of the system during off-hours for up to 4 hours. The time switch shall be capable of programming different schedules for weekdays and weekends and have program backup capabilities that prevent the loss of the device's program and time setting for at least 10 hours if power is interrupted; or
	1B.	An occupancy sensor to control the operating period of the system; or
	1C.	A 4-hour timer that can be manually operated to control the operating period of the system.
	2.	Each space conditioning system shall be installed with controls that temporarily restart and temporarily operate the system as required to maintain a setback heating and/or a setup cooling thermostat setpoint.
§122(g):		Each space conditioning system serving multiple zones with a combined conditioned floor area more than 25,000 square feet shall be provided with isolation zones. Each zone, shall not exceed 25,000 square feet; shall be provided with isolation devices, such as valves or dampers that allow the supply of heating or cooling to be setback or shut off independently of other isolation areas; and shall be controlled by a time control device as described above.
§122(c):		Thermostats shall have numeric setpoints in degrees Fahrenheit (F) and adjustable setpoint stops accessible only to authorized personnel.
§122(b):		Heat pumps shall be installed with controls to prevent electric resistance supplementary heater operation when the heating load can be met by the heat pump alone.
§122(a&b):		Each space conditioning system shall be controlled by an individual thermostat that responds to temperature within the zone. Where used to control heating, the control shall be adjustable down to 55 degrees F or lower. For cooling, the control shall be adjustable up to 85 degrees F or higher. Where used for both heating and cooling, the control shall be capable of providing a deadband of at least 5 degrees F within which the supply of heating and cooling is shut off or reduced to a minimum.

Ventilation

§121(e):	Controls shall be provided to allow outside air dampers or devices to be operated at the ventilation rates as specified on these plans.
§122(f):	All gravity ventilating systems shall be provided with automatic or readily accessible manually operated dampers in all openings to the outside, except for combustion air openings.
§121(f):	Ventilation System Acceptance. Before an occupancy permit is granted for a newly constructed building or space, or a new ventilating system serving a building or space is operated for normal use, all ventilation systems serving the building or space shall be certified as meeting the Acceptance Requirements for Code Compliance.

Service Water Heating Systems

§113(c)		Installation
	3.	Temperature controls for public lavatories. The controls shall limit the outlet Temperature to 110°F.
	2.	Circulating service water-heating systems shall have a control capable of automatically turning off the circulating pump when hot water is not required.

EnergyPro 5.1 by EnergySoft — User Number: 7922 — RunCode: 2014-05-01T15:51:25 — ID: S007007.00 — Page 21 of 27

Proprietary design: These drawings and design are protected by common law copyright. All patentable material contained herein and originating with Domusstudio LLP shall be the property of Domusstudio LLP © domusstudio LLP

© COPYRIGHT October 07, 2014 at 2:31PM

South Mission Beach Lifeguard Station
San Diego, California

M–5

SPEC. NO. 8147

M-E Engineers, Inc.
3760 Convoy St. Suite 340
San Diego CA 92111
t 858.565.3200 / f 858.565.3306
www.me-engineers.com

REGISTERED PROFESSIONAL ENGINEER — LAWRENCE A. BROOKS — NO. M16565 — MECHANICAL — STATE OF CALIFORNIA — 10/07/14

PLANS FOR THE CONSTRUCTION OF
South Mission Beach Lifeguard Station

MECHANICAL TITLE 24 SHEETS — M0.5

CITY OF SAN DIEGO, CALIFORNIA
ENGINEERING & CAPITAL PROJECTS
ARCHITECTURAL ENGINEERING & CONTRACTS DIVISION
SHEET 70 OF 94 SHEETS

WBS S-00791

FOR CITY ENGINEER — DATE 10/13/2014

SUBMITTED BY: JIHAD SLEIMAN, PROJECT MANAGER
YOUSIF DENYAMIN, PROJECT ENGINEER

DESCRIPTION	BY	APPROVED	DATE	FILMED
ORIGINAL	LAB			

218-1693 CCS27 COORDINATES
1858-6253 CCS83 COORDINATES

CONTRACTOR ______ DATE STARTED ______
INSPECTOR ______ DATE COMPLETED ______

32849–70–D

South Mission Beach Lifeguard Station
San Diego, California

KEY NOTES

1. 8x6 EXHAUST DUCT UP THROUGH ROOF.
2. PROVIDE 0.28 S.F. FREE AREA (MINIMUM) DOOR INTAKE LOUVER.
3. 10x8 EXHAUST DUCT UP THROUGH ROOF.
4. PROVIDE 0.14 S.F. FREE AREA (MINIMUM) EXHAUST LOUVER.
5. PROVIDE 0.44 S.F. FREE AREA (MINIMUM) DOOR INTAKE LOUVER.
6. PROVIDE 0.30 S.F. FREE AREA (MINIMUM) INTAKE LOUVER.
7. 16"x16" SUPPLY AIR DUCT UP THRU ROOF TO SF-1.
8. 8x8 EXHAUST DUCT UP THRU ROOF.
9. 20x10 RETURN DUCT DOWN FROM RTU-1.
10. SEE DETAIL 3/M4.2. PROVIDE 18x24 ACCESS PANEL.
11. 4" RIGID METAL DRYER VENT WITH A TOTAL DUCT RUN NOT TO EXCEED 12'-0" AND MAXIMUM OF THREE (3) ELBOWS.
12. 20x10 SUPPLY DUCT DOWN FROM RTU-1.
13. SEE DETAIL 4/M4.2.
14. SEE DETAIL 4/M4.1.
15. SEE DETAIL 6/M4.1.
16. SEE DETAIL 8/M4.1.
17. SEE DETAIL 2/M4.1.
18. 4 SQUARE FEET NET FREE AREA WALL LOUVERS. SEE ARCHITECTURAL DRAWINGS.

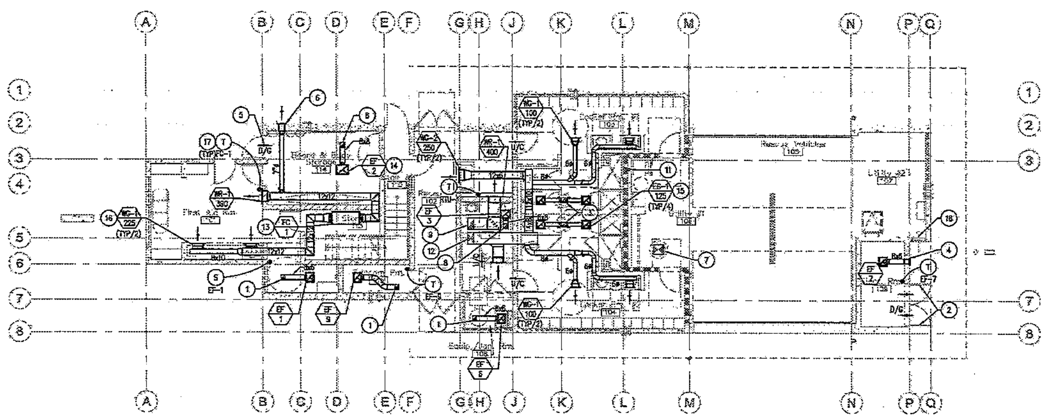

FIRST FLOOR MECHANICAL PLAN

SCALE: _" = 1'-0"

M-6

M-E Engineers, Inc.
3760 Convoy St. Suite 340
San Diego CA 92111
t.858.565.3800/f.858.565.3906
www.me-engineers.com

SPEC. NO. 8147

10/07/14

PLANS FOR THE CONSTRUCTION OF

South Mission Beach Lifeguard Station

FIRST FLOOR MECHANICAL PLAN — M1.1

CITY OF SAN DIEGO, CALIFORNIA
ENGINEERING & CAPITAL PROJECTS
ARCHITECTURAL ENGINEERING & CONTRACTS DIVISION
SHEET 71 OF 94 SHEETS

WBS S-00791

FOR CITY ENGINEER — DATE 10/13/2014

SUBMITTED BY: JIHAD SLEIMAN, PROJECT MANAGER

DESCRIPTION	BY	APPROVED	DATE	FILMED
ORIGINAL	L.A.B.			

YOUSIF BENYAMIN — PROJECT ENGINEER

215-1693 — CCS27 COORDINATES

1858-6255 — CCS83 COORDINATES

CONTRACTOR ______ DATE STARTED ______
INSPECTOR ______ DATE COMPLETED ______

32849-71-D

ADDENDUM "A"

South Mission Beach Lifeguard Station
San Diego, California

KEY NOTES

1. 6ø EXHAUST DUCT UP TO 3RD FLOOR.
2. PROVIDE 10'-0" CLEARANCE FROM ANY EXHAUST.
3. 8x6 EXHAUST DUCT UP THROUGH ROOF. SEE DETAIL 2/M4.2.
4. 8x8 EXHAUST DUCT UP THROUGH ROOF. SEE DETAIL 2/M4.2.
5. 20x10 RETURN DUCT UP THROUGH SHAFT.
6. 20x10 SUPPLY DUCT UP THROUGH SHAFT.
7. 20x12 RETURN AIR DUCT UP THROUGH ROOF TO RTU-2.
8. 20x12 SUPPLY AIR DUCT UP THROUGH ROOF TO RTU-2. PROVIDE DUCT TRANSITION AS NECESSARY TO AVOID OBSTRUCTIONS.
9. 15x15 RETURN AIR DUCT UP THROUGH ROOF TO RTU-1.
10. 15x15 SUPPLY AIR DUCT UP THROUGH ROOF TO RTU-1.
11. SEE DETAIL 6/M4.2.
12. CLOTHES DRYER EXHAUST. PROVIDE GOOSENECK.

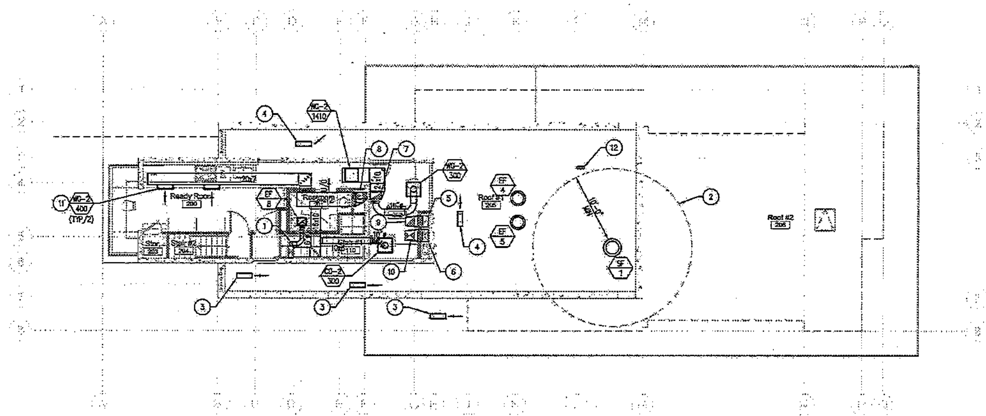

SECOND FLOOR AND ROOF MECHANICAL PLAN

SCALE: 1/8" = 1'-0"

M-7

M-E Engineers, Inc.
3760 Convoy St. Suite 340
San Diego CA 92111
t.858.565.3800/f.858.565.3806
www.me-engineers.com

SPEC. NO. 8147

10/07/14

PLANS FOR THE CONSTRUCTION OF
South Mission Beach Lifeguard Station

SECOND FLOOR & ROOF MECHANICAL PLAN — M1.2

CITY OF SAN DIEGO, CALIFORNIA
ENGINEERING & CAPITAL PROJECTS
ARCHITECTURAL ENGINEERING & CONTRACTS DIVISION
SHEET 72 OF 94 SHEETS

WBS S-00791

FOR CITY ENGINEER — DATE 10/13/2014

SUBMITTED BY: JIHAD SLEIMAN, PROJECT MANAGER
YOUSIF BENYAMIN, PROJECT ENGINEER
218-1693 CCS27 COORDINATES
1858-6253 CCS83 COORDINATES

DESCRIPTION	BY	APPROVED	DATE	FILMED
ORIGINAL	L A B			

CONTRACTOR ______ DATE STARTED ______
INSPECTOR ______ DATE COMPLETED ______

32849-72-D

© COPYRIGHT October 07, 2014 at 2:26 PM

South Mission Beach Lifeguard Station
San Diego, California

KEY NOTES

1. PROVIDE ONE-WAY THROW. AIR DIRECTION AS SHOWN ON PLANS.
2. 6x6 EXHAUST GRILLE. MAINTAIN 10'-0" DISTANCE FROM THE OUTSIDE AIR INTAKE.
3. 20x8" SUPPLY AIR DUCT DOWN TO SECOND FLOOR. SEE SHEET M1.2 FOR CONTINUATION.
4. ROUTE SUPPLY AIR DUCT IN SOFFIT. REFER TO ARCHITECTURAL PLANS.
5. SUPPLY AIR DUCT RISE UP BETWEEN JOISTS. REFER TO ARCHITECTURAL AND STRUCTURAL PLANS.
6. 6"ø EXHAUST DUCT DOWN TO SECOND FLOOR. SEE SHEET M1.2 FOR CONTINUATION.

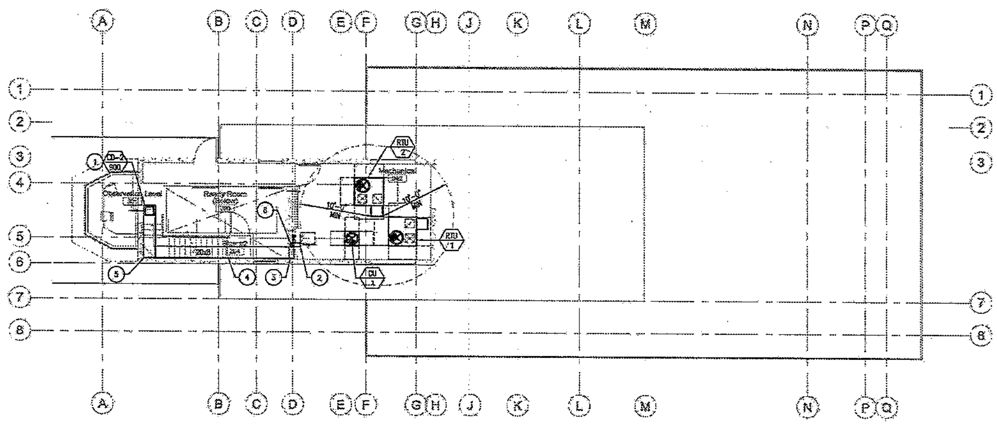

OBSERVATION LEVEL MECHANICAL PLAN

SCALE: 1/8" = 1'-0"

M-8

M-E Engineers, Inc. 3760 Convoy St. Suite 340 San Diego CA 92111 t.858.565.3900 / f.858.565.3906 www.me-engineers.com	SPEC. NO. 8147 — MECHANICAL, STATE OF CALIFORNIA, 10/07/14

PLANS FOR THE CONSTRUCTION OF
South Mission Beach Lifeguard Station

OBSERVATION LEVEL MECHANICAL PLAN — M1.3

CITY OF SAN DIEGO, CALIFORNIA
ENGINEERING & CAPITAL PROJECTS
ARCHITECTURAL ENGINEERING & CONTRACTS DIVISION
SHEET 73 OF 94 SHEETS

WBS S-00791

10/13/2014
FOR CITY ENGINEER — DATE

SUBMITTED BY: JIHAD SLEIMAN, PROJECT MANAGER
YOUSIF BENYAMIN, PROJECT ENGINEER
218-1803 CCS27 COORDINATES
1858-6253 CCS83 COORDINATES

DESCRIPTION	BY	APPROVED	DATE	FILMED
ORIGINAL	L.A.B.			

CONTRACTOR ____ DATE STARTED ____
INSPECTOR ____ DATE COMPLETED ____

32849-73-D

© COPYRIGHT October 07, 2014 at 2:26 PM

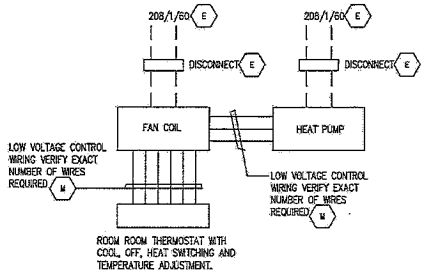

SPLIT SYSTEM HEAT PUMP CONTROL DIAGRAM

SCALE: NONE | 7 | M4-1

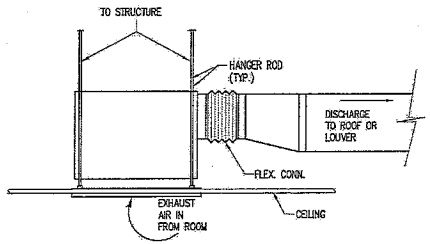

CEILING EXHAUST FAN DETAIL

SCALE: NONE | 4 | M4-1

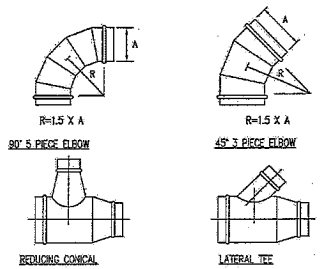

NOTES:
1. FITTINGS TO BE 2 GAGES HEAVIER THAN CONNECTING DUCT.
2. ADJUSTABLE ELBOWS PERMITTED W/DUCT CONSTRUCTION OF 2" W.C. OR LESS.
3. CONTINUOUS SEALANT AT EACH GORE JOINT.

ROUND DUCT FITTINGS DETAIL

SCALE: NONE | 1 | M4-1

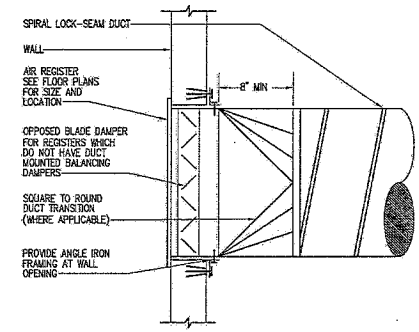

SIDEWALL REGISTER DETAIL

SCALE: NONE | 8 | M4-1

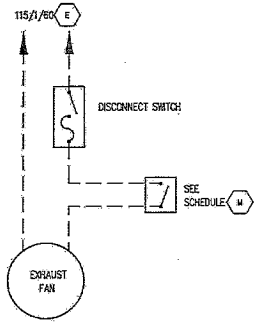

EXHAUST FAN CONTROL DIAGRAM

SCALE: NONE | 5 | M4-1

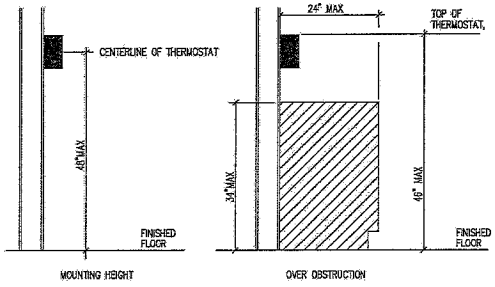

THERMOSTAT MOUNTING DETAIL

SCALE: NONE | 2 | M4-1

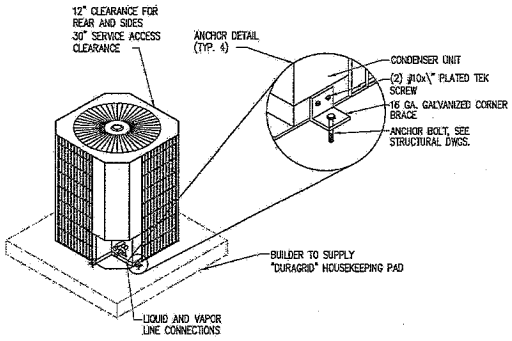

ROOFTOP CONDENSER UNIT DETAIL

SCALE: NONE | 9 | M4-1

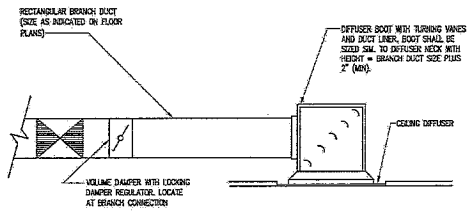

1. RETURN AND EXHAUST REGISTERS INSTALLED SIMILARLY, EXCEPT REGISTER BOOT SHALL BE UNLINED.
2. FOR HARD CEILINGS PROVIDE SURFACE MOUNTED TYPE CEILING DIFFUSERS WITH OPPOSED BLADE DAMPERS.
3. SEE SPECIFICATION FOR AIR DISTRIBUTION TYPE.
4. ATTACH DIFFUSER BOOT TO TERMINAL WITH SHEET METAL SCREWS AND MEDIUM PRESSURE DUCT SEALANT.

CEILING DIFFUSER W/ HEIGHT RESTRICTION HARD CONNECTION DETAIL

SCALE: NONE | 6 | M4-1

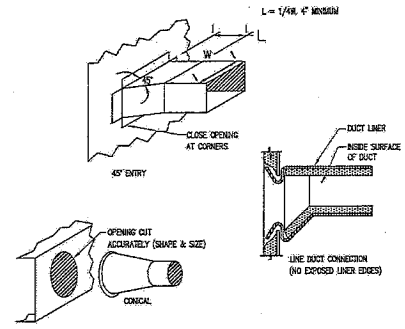

BRANCH CONNECTIONS DETAIL

SCALE: NONE | 3 | M4-1

M-9

M-E Engineers, Inc.
3760 Convoy St. Suite 340
San Diego CA 92111
t.858.565.3500/f.858.565.3505
www.me-engineers.com

SPEC. NO. 4147

10/07/14

PLANS FOR THE CONSTRUCTION OF
South Mission Beach Lifeguard Station

MECHANICAL DETAILS | M4.1

CITY OF SAN DIEGO, CALIFORNIA
ENGINEERING & CAPITAL PROJECTS
ARCHITECTURAL ENGINEERING & CONTRACTS DIVISION
SHEET 74 OF 84 SHEETS

WBS S-00791

10/13/2014
FOR CITY ENGINEER — DATE

SUBMITTED BY: JHAD ELEMAN, PROJECT MANAGER

DESCRIPTION	BY	APPROVED	DATE	FILMED
ORIGINAL	L. A. B.			

YOUSIF BENYAMIN, PROJECT ENGINEER

216-1853
COORD COORDINATES

1856-6253
COORD COORDINATES

CONTRACTOR _____ DATE STARTED _____
INSPECTOR _____ DATE COMPLETED _____

32849-74-D

Proprietary Rights: These drawings and designs are protected by common law and copyright. All permissible rights reserved. Use and copying with Attorney's Associates Architects dba Brandstetter, LLP and/or the permission of Attorney's Associates Architects dba Brandstetter, LLP
© COPYRIGHT Brandstetter, 2014 at 4:25PM

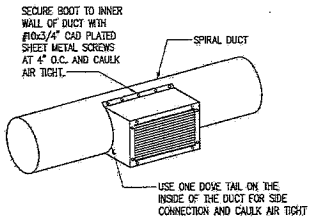

EXPOSED DUCT REGISTER DETAIL

SCALE: NONE | 6 | M4-2

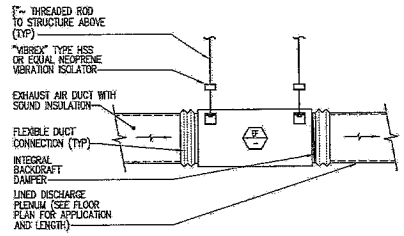

INLINE EXHAUST FAN DETAIL

SCALE: NONE | 3 | M4-2

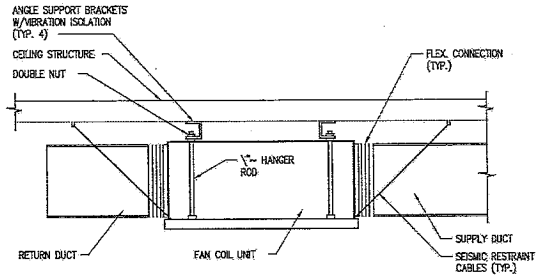

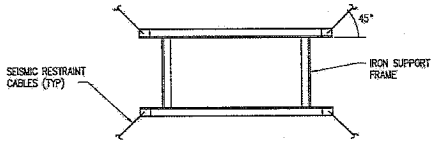

FAN COIL SUPPORT DETAIL

SCALE: NONE | 4 | M4-2

SEQUENCE OF OPERATION

FC-1 / CU-1:

A. SYSTEM SHALL BE STARTED, STOPPED AND CONTROLLED THROUGH THE WALL THERMOSTAT.
B. WHEN THE SYSTEM IS STARTED, THE SUPPLY AIR FAN SHALL BE CONSTANTLY 'ON'.
C. COOLING MODE: ROOM TEMPERATURE SHALL BE MAINTAINED AT 76°F (FIELD ADJUSTABLE).
   1. WHEN THE ROOM TEMPERATURE SENSOR SENSED THAT THE ROOM TEMPERATURE IS WARMER THAN THE SETPOINT, THE CONDENSER FAN AND COMPRESSOR IN THE OUTDOOR UNIT SHALL OPERATE.
   2. WHEN THE ROOM TEMPERATURE SENSOR SENSED THAT THE ROOM TEMPERATURE IS COLDER THAN THE SETPOINT, THE CONDENSER FAN AND COMPRESSOR IN THE OUTDOOR UNIT SHALL TURN 'OFF'.
D. HEATING MODE: ROOM TEMPERATURE SHALL BE MAINTAINED AT 72°F (FIELD ADJUSTABLE).
   1. WHEN THE ROOM TEMPERATURE SENSOR SENSED THAT THE ROOM TEMPERATURE IS COLDER THAN THE SETPOINT, THE CONDENSER FAN AND COMPRESSOR IN THE OUTDOOR UNIT SHALL OPERATE.
   2. WHEN THE ROOM TEMPERATURE SENSOR SENSED THAT THE ROOM TEMPERATURE IS WARMER THAN THE SETPOINT, THE CONDENSER FAN AND COMPRESSOR IN THE OUTDOOR UNIT SHALL TURN 'OFF'.

RTU-1 & RTU-2:

A. SYSTEM SHALL BE STARTED, STOPPED AND CONTROLLED THROUGH THE WALL THERMOSTAT.
B. WHEN THE SYSTEM IS STARTED, THE SUPPLY AIR FAN SHALL BE CONSTANTLY 'ON'.
C. COOLING MODE: ROOM TEMPERATURE SHALL BE MAINTAINED AT 76°F (FIELD ADJUSTABLE).
   1. WHEN THE ROOM TEMPERATURE SENSOR SENSED THAT THE ROOM TEMPERATURE IS WARMER THAN THE SETPOINT, THE CONDENSER FAN AND COMPRESSOR IN THE OUTDOOR UNIT SHALL OPERATE.
   2. WHEN THE ROOM TEMPERATURE SENSOR SENSED THAT THE ROOM TEMPERATURE IS COLDER THAN THE SETPOINT, THE CONDENSER FAN AND COMPRESSOR IN THE OUTDOOR UNIT SHALL TURN 'OFF'.
D. HEATING MODE: ROOM TEMPERATURE SHALL BE MAINTAINED AT 72°F (FIELD ADJUSTABLE).
   1. WHEN THE ROOM TEMPERATURE SENSOR SENSED THAT THE ROOM TEMPERATURE IS COLDER THAN THE SETPOINT, THE CONDENSER FAN AND COMPRESSOR IN THE OUTDOOR UNIT SHALL OPERATE.
   2. WHEN THE ROOM TEMPERATURE SENSOR SENSED THAT THE ROOM TEMPERATURE IS WARMER THAN THE SETPOINT, THE CONDENSER FAN AND COMPRESSOR IN THE OUTDOOR UNIT SHALL TURN 'OFF'.

SEQUENCE OF OPERATION

SCALE: NONE | 1 | M4-2

NO. PINS	LINER INTERIOR WIDTH
0	8" DIA.
2	9"-16"
3	17"-28"
4	29"-40"
5	41"-52"
6	53"-64"
7	65"-76"
8	77"-88"
9	89"-100"

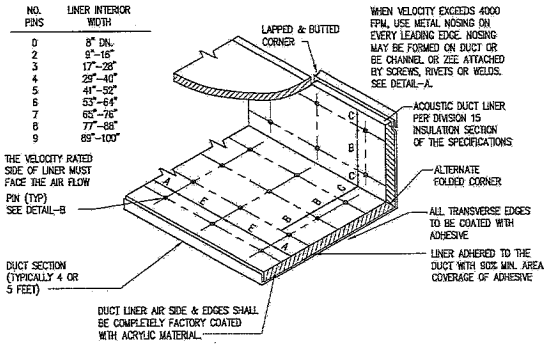

MAXIMUM SPACING FOR FASTENERS.
ACTUAL INTERVALS ARE APPROXIMATE.

VELOCITY *	DIMENSIONS			
	A	B	C	E
0-2500 FPM	3"	12"	4"	18"
2501-6000 FPM	3"	6"	4"	16"

* UNLESS A LOWER LEVEL IS SET BY MANUFACTURER OR LISTING AGENCY

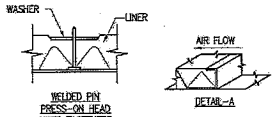

DUCT LINING DETAIL

SCALE: NONE | 5 | M4-2

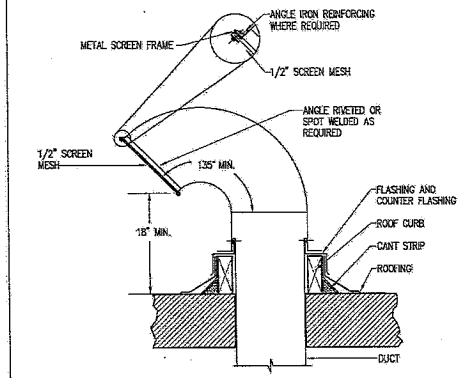

RECTANGULAR GOOSENECK DETAIL

SCALE: NONE | 2 | M4-2

M-10

me engineers
M-E Engineers, Inc.
3760 Convoy St. Suite 340
San Diego CA 92111
t.858.565.3800 f.858.565.3805
www.me-engineers.com

SPEC. NO. 3147

REGISTERED PROFESSIONAL ENGINEER — Jamal A. Sleiman — MECHANICAL — STATE OF CALIFORNIA
10/07/14

PLANS FOR THE CONSTRUCTION OF
South Mission Beach Lifeguard Station

MECHANICAL DETAILS | M4.2

CITY OF SAN DIEGO, CALIFORNIA
ENGINEERING & CAPITAL PROJECTS
ARCHITECTURAL ENGINEERING & CONSTRUCTION DIVISION
SHEET 73 OF 94 SHEETS

FOR CITY ENGINEER — DATE 10/13/2014

WBS S-00791

SUBMITTED BY: JAMAL SLEIMAN, PROJECT MANAGER

YOUSIF BENYAMIN, PROJECT ENGINEER

DESCRIPTION	BY	APPROVED	DATE	FILMED
ORIGINAL	L A B			

215-1893 GRID COORDINATES
1838-6253 GRID COORDINATES

CONTRACTOR — DATE STARTED
INSPECTOR — DATE COMPLETED

32849-75-D

Proprietary design: These drawings and designs are protected by common law copyright. All reasonable material contained herein and originating with Dunlap + Associates Architects ® Dunlap + Associates Architects, LLP shall be the property of Dunlap + Associates Architects ® Dunlap + Associates Architects, LLP
©COPYRIGHT, Dunlap+D, 2014 at 4:28PM

ADDENDUM "A"

Proprietary design: These drawings and design are protected by common law copyright. All patentable material contained herein and originating with Dominy + Associates Architects @ domusstudio LLP shall be the property of Dominy + Associates Architects @ domusstudio LLP

FIXTURE CONNECTION SCHEDULE

MARK	DESCRIPTION	MINIMUM PIPE SIZE CW	HW	WASTE	VENT	MANUFACTURER & MODEL NUMBER	REMARKS
WC-1	WATER CLOSET – FLOOR MTD., F.V., (S.S.)	1-1/2"	–	4"	2"	KOHLER – #K-4406, "WELLWORTH", FLOOR MOUNTD, ELONGATED, V.C., 1.28 GPF WITH OLSONITE #10CC-SS, OPEN FRONT SEAT & SLOAN ROYAL #111 1.28 GPF FLUSH VALVE. FIXTURE COLOR: WHITE.	
WC-2	WATER CLOSET –FLOOR MTD., F.V., (S.S. ADA)	1-1/2"	–	4"	2"	KOHLER – #K-K-4405, "HIGHLINE", FLOOR MOUNTED, ELONGATED, SIPHON JET, V.C., WITH OLSONITE #10CC-SS, OPEN FRONT SEAT & SLOAN ROYAL #111 1.28 GPF FLUSH VALVE. FIXTURE COLOR: WHITE.	INSTALL PER ADA REQUIREMENTS PROVIDE WITH SLOAN *F-72-A1 FLUSHOMETER TRAP PRIMER CONNECTOR WHERE INDICATED ON PLANS.
LAV-1	LAVATORY	1/2"	1/2"	2"	1-1/2"	AMERICAN STANDARD 0321.026 "DECLYN" VITREOUS CHINA WITH WALL HANGER , ADA COMPLIANT, SYMMONS #S-60-GH SELF-CLOSING FAUCET, 0.2 GALLONS/CYCLE MAXIMUM. GRID DRAIN & ANGLE STOPS, BRADLEY S59-4000A TMV.	PROVIDE WITH SLOAN *F-72-A1 FLUSHOMETER TRAP PRIMER CONNECTOR WHERE INDICATED ON PLANS.
LAV-2	LAVATORY	1/2"	1/2"	2"	1-1/2"	KOHLER PENNINGTON K-2196 VITREOUS CHINA, 4" CENTERS WITH OVERFLOW, OVAL COUNTER MOUNTED LAVATORY AND MOEN 8413F03 FAUCET, SINGLE HANDLE, 0.35 GPM LAVATORY FAUCET.	INSULATE TAILPIECE AND SUPPLIES W/ HANDY SHIELD OR APPROVED EQUAL.
LAV-3	LAVATORY	1/2"	1/2"	2"	1-1/2"	KOHLER PENNINGTON K-2196 VITREOUS CHINA, 4" CENTERS WITH OVERFLOW, OVAL COUNTER MOUNTED LAVATORY AND MOEN 8413F03 FAUCET, SINGLE HANDLE, ADA COMPLIANT, 0.35 GPM LAVATORY FAUCET. BRADLEY S59-4000A TMV.	INSULATE TAILPIECE AND SUPPLIES W/ HANDY SHIELD OR APPROVED EQUAL.
S-1	SINK	1/2"	1/2"	2"	1-1/2"	ELKAY LRAD3322, FOUR (4) HOLE PUNCHED DOUBLE COMPARTMENT, 18 GAUGE TYPE 304 STAINLESS, SELF RIMMING, 13.5"X 16"X 5.5" DEEP, WITH ELKAY LKAD18 3" GRID STRAINERS, CHICAGO FAUCET 1102CP FAUCET WITH WRISTBLADE HANDLES, 8" SWING SPOUT AND SIDE SPRAY, 1.8 GPM MAXIMUM FLOWRATE	
KS-1	SINK	1/2"	1/2"	2"	1-1/2"	SINK INTEGRAL WITH COUNTERTOP BY OTHERS. MOEN 8707 1.5 GPM FAUCET WITH SIDE SPRAY. EVERPURE EV9820-10 DRINKING WATER FAUCET WITH FILTER SYSTEM QL2-OW200L. PROVIDE TRAP AND SUPPLIES. PROVIDE AND INSTALL FILTER FOR REFRIGERATOR PER MANUFACTURERS RECOMMENDATIONS.	FURNISHED BY OTHERS. PROVIDE AND INSTALL TRAPS , SUPPLIES AND OTHER ACCESSORIES REQUIRED.
SH-1	SHOWER	3/4"	3/4"	2"	1-1/2"	MOEN POSI-TEMP T-2444-25802 SHOWER SYSTEM. PRESSURE BALANCING VALVE W/INTERAL STOPS. MOEN-FLO XL 6302-EP SHOWER HEAD 1.75 GPM. DRAIN SHALL BE FD-1 LESS TRAP PRIMER CONNECTION.	
SH-2	SHOWER – ADA	3/4"	3/4"	3"	1-1/2"	MOEN 8342 ADA SHOWER SYSTEM. PRESSURE BALANCING MIXING VALVE W/INTEGRAL STOPS, 3 FUNCTION TRANSFER VALVE, 6302-EP FIXED SHOWERHEAD WITH ARM. 8349EP17 1.75 GPM HANDHELD HEAD W/NON-POSITIVE PAUSE, FLEXIBLE 5 FOOT METAL HOSE, SLIDE BAR & INLINE VACUUM BREAKER. DRAIN SHALL BE FD-1 LESS TRAP PRIMER.	
JS-1	MOP BASIN	3/4"	3/4"	3"	1-1/2"	FIAT TSB-3636 TERRAZZO MOP BASIN WITH S.S CAPS ON CURBS. 36 X 36 X 12" DEEP. CHICAGO FAUCET 540-LD897SWXF FAUCET WITH WATTS SERIES 8A VACUUM BREAKER	
JS-2	MOP BASIN FAUCET	3/4"	3/4"	3"	1-1/2"	CHICAGO FAUCET 640-L12E1ABCP-369YAB FAUCET WITH 12" L TYPE SWING SPOUT	INSTALLED IN FIRST AID ROOM 101
JS-3	SINK	1/2"	1/2"	2"	1-1/2"	JUST A-18565 WALL HUNG, 14 GAUGE TYPE 304 STAINLESS STEEL SERVICE SINK 23"X 18-1/2"X 12" DEEP, J-35 DRAIN, CHICAGO FAUCET 640-L9E1-369YAB WALL MOUNTED FAUCET WITH ADJUSTABLE ARMS, INTEGRAL STOPS, 9-1/2" SWING SPOUT.	
WB-1	WASHER BOX	3/4"	3/4"	2"	1-1/2"	ACORN #8186- RECESSED, STAINLESS STEEL, WASHER SUPPLY DRAIN WITH HW, CW, WASTE CONNECTIONS, VACUUM BREAKERS. INSTALL WATER HAMMER ARRESTORS	
IB-1	ICE MAKER BOX	1/2"	–	–	–	OATEY 39140 POWDER COATED GALVANIZED STEEL ICE MAKER BOX WITH 1/4 TURN VALVE AND WATER HAMMER ARRESTOR	
HB-1	HOSE BIBB	3/4"	–	–	–	ACORN – #8121-SSLF-CP, LEAD FREE WALL MOUNT TYPE WITH VACCUM BREAKER AND CHROME PLATING, WITH LOCKSHIELD BONNET & REMOVABLE LOOSE KEY HANDLE.	
HB-2	WALL HYDRANT	3/4"	3/4"	–	–	ACORN – #8156-SSLF, RECESSED HOT & COLD HOSE BIBB IN HOSE BOX WITH VACUUM BREAKER ACCESS DOOR WITH LOCK VANDAL RESISTANT, LEAD FREE.	
HB-3	WALL HYDRANT	3/4"	–	–	–	ACORN – #8151-SSLF, RECESSED COLD WATER HOSE BIBB IN HOSE BOX WITH VACUUM BREAKER ACCESS DOOR WITH LOCK VANDAL RESISTANT, LEAD FREE.	
FD-1	FLOOR DRAIN	–	–	2"	1-1/2"	J.R. SMITH – #2005YA-P050, 5" DIA., ROUND NICKEL BRONZE STRAINER HEAD & TRAP PRIMER CONNECTION.	ALL FLOOR DRAINS SHALL HAVE TRAP PRIMER CONNECTIONS
FS-1	FLOOR SINK	–	–	2"	1-1/2"	J.R. SMITH – #3100Y, NO-HUB OUTLET. PARTIAL GRATE, 8-1/2"X 8-1/2""X 6" DEEP. 2" OUTLET, TRAP PRIMER CONNECTION.	
IWR-1	ROOF INDIRECT WASTE RECEPTOR	–	–	2"	1-1/2"	J.R. SMITH – #3960 ROOF-CEPTOR, NO-HUB OUTLET. 7]" OPENING. 2" OUTLET NO TRAP PRIMER CONNECTION.	IWR-1 SHALL BE LISTED BY IAPMO AS AN APPROVED INDIRECT WASTE RECEPTOR.
TD-1	TRENCH DRAIN	–	–	4"	2"	ZURN 883 6" WIDE SHALLOW MODULAR POLYPROPYLENE TRENCH DRAIN SYSTEM W/SLOTTED, H-20 RATED DUCTILE IRON GRATE	
RD-1	ROOF DRAIN	–	–	–	–	J.R. SMITH – 1310-ERC DUCO CAST IRON BODY WITH ALUMINUM DOME, EXTENSION, SUMP RECEIVER AND UNDERDECK CLAMP	
ORD-1	OVERFLOW ROOF DRAIN	–	–	–	–	J.R. SMITH – 1310-ERC-WD DUCO CAST IRON BODY WITH ALUMINUM DOME, EXTENSION, SUMP RECEIVER, UNDERDECK CLAMP AND 2" SOLID WATER DAM	
ST-1	STORM & OVERFLOW TERMINATION FITTING	–	–	–	–	J.R. SMITH – 1770 DOWNSPOUT NOZZLE	INSTALL AT STORM AND OVERFLOW STORM TERMINATION OUTSIDE BUILDING
TP-1	TRAP PRIMER	1/2"	–	–	–	PPP OR EQUAL. PRESSURE TYPE CONFORMING TO AB 1953 CAPABLE OF SERVING MULTIPLE DRAINS.	
TP-2	ELECTRIC TRAP PRIMER	1/2"	–	–	–	PPP OR EQUAL. ELECTRIC T.P. CONFORMING TO AB 1953 CAPABLE OF SERVING MULTIPLE DRAINS.	

PLUMBING EQUIPMENT SCHEDULE

ITEM	DESCRIPTION	LOCATION	MANUFACTURER & MODEL NUMBER	REMARKS
WH 1	WATER HEATER (ELECTRIC)	JANITORS ROOM	A.O.SMITH – DRE 120 –119 GALLON CAPACITY, 45 KILOWATT, 184 GPH RECOVERY RATE AT 100F. RISE. OPERATING WEIGHT–1400 LBS., 9 ELEMENTS, 5 KILOWATT PER ELEMENT. 208 V/ 3 PH.	TERMINATE P & T RELIEF LINE AT FLOOR SINK. THERMAL EXPANSION TANK ZURN XT-18. LEAD FREE 2.4 GALLONS ACCEPTANCE. WEIGHT 10 LBS.
CP 1	CIRCULATION PUMP (IN-LINE)	JANITORS ROOM	BELL & GOSSETT – NBF-10S, 3 GPM AT 5 FT. HD., 115 V/ 1 PH., 0.46 AMPS, 55 WATTS, 2800 RPM, 9 LBS.	
GD 1	GARBAGE DISPOSAL	SEE PLANS	IN-SINK-ERATOR – MODEL PRO 77, 1 H.P., STAINLESS STEEL CONSTRUCTION, 115 V/ 1 PH, 1725 RPM.	
PRV 1	PRESSURE REGULATING CW VALVE	SEE PLANS	WILKINS – #500YSBR SERIES. 1-1/2" ALL BRONZE BODY. FACTORY SET AT 70 PSI. LEAD FREE	FALL-OFF PRESSURE OF 10 PSI AT 60 GPM PROVIDE AND INSTALL Y STRAINER UPSTREAM LEAD FREE
SI 1&2	SAND INTERCEPTOR	SEE PLANS	JENSEN – 320 GALLON SAND-OIL INTERCEPTOR. H-20 TRAFFIC LOAD. 4" INLET/OUTLET. PRE-CAST CONCRETE.	

PLUMBING GENERAL NOTES

1. THESE DRAWINGS ARE ESSENTIALLY DIAGRAMMATIC AND ARE NOT INTENDED TO INDICATE ALL DETAILS AND NECESSARY OFFSETS OF PIPING. THE CONTRACTOR SHALL INSTALL MATERIAL AND EQUIPMENT IN A MANNER AS TO CONFORM TO STRUCTURE, AVOID OBSTRUCTIONS, PRESERVE HEADROOM, AND KEEP OPENINGS AND PASSAGEWAYS CLEAR. ALL INSTALLATIONS SHALL BE CONSISTENT WITH NORMALLY ACCEPTABLE INDUSTRY STANDARDS.
2. EQUIPMENT INDICATED ON THIS DRAWING IS SHOWN IN APPROXIMATE POSITION(S). CONTRACTOR SHALL FIELD VERIFY ALL CONDITIONS INCLUDING EQUIPMENT LOCATIONS, P.O.C'S AND STRUCTURAL MEMBERS PRIOR TO INSTALLATION. IN ALL CASES, ADEQUATE ACCESS (PER MANUFACTURERS RECOMMENDATIONS AND CODE COMPLIANCE) FOR MAINTENANCE AND REPLACEMENT OF EQUIPMENT SHALL BE PROVIDED.
3. ALL WORK SHALL BE DONE IN ACCORDANCE WITH ALL APPLICABLE CODES. NOTHING SHOWN ON THE PLANS OR STATED IN THE SPECIFICATIONS IS INTENDED TO INDICATE THAT THE INSTALLATIONS OR CONNECTIONS OF ANY ITEM OR DEVICE SHOULD BE DONE CONTRARY TO MANUFACTURERS INSTRUCTIONS AND ALL APPLICABLE CODES AND REGULATIONS. THE CONTRACTOR IS RESPONSIBLE TO INSURE THAT THE INSTALLATIONS AND CONNECTIONS OF ALL ITEMS AND DEVICES CONFORMS TO MANUFACTURERS INSTRUCTIONS AND TO ALL APPLICABLE CODES AND REGULATIONS.
4. ALL PLUMBING EQUIPMENT, MATERIAL, AND ALL CONNECTIONS THERETO SHALL BE INSTALLED COMPLETE PER MANUFACTURERS INSTRUCTIONS TO PROVIDE A COMPLETE AND FULLY OPERATIONAL SYSTEM.
5. SOIL, SEWER AND WASTE PIPING UNDER 3" IN SIZE SHALL SLOPE AT 1/4" PER FOOT MINIMUM, PIPING OVER 3" SHALL SLOPE AT 1/8" PER FOOT MINIMUM.
6. ALL PLUMBING SOLDER SHALL BE LEAD FREE.
7. CONDENSATE DRAIN PIPING FROM EQUIPMENT WITHIN BUILDING SHALL BE INSULATED A MINIMUM DISTANCE OF 20 (TWENTY) FEET FROM SAID EQUIPMENT.
8. CROSS CONNECTION PROTECTION SHALL BE PROVIDED AT ALL POTABLE WATER SUPPLIED APPLIANCES AND EQUIPMENT.
9. FLOOR SINKS FOR INDIRECT WASTE, (EXCLUDING KITCHENS): FLOOR SINKS INDICATED ON THESE DRAWINGS ADJACENT TO EITHER OWNER OR CONTRACTOR FURNISHED EQUIPMENT ARE USED FOR INDIRECT WASTE DRAINAGE OF SAID EQUIPMENT. THE CONTRACTOR SHALL PROVIDE AND ROUTE INDIRECT WASTE PIPING FROM EQUIPMENT TO THE INDICATED FLOOR SINK(S), AND SPILL INTO FLOOR SINK(S) WITH A MINIMUM ONE INCH (1") AIR GAP. NO DIRECT CONNECTION OF EQUIPMENT IS ALLOWED. ALL FLOOR SINKS SHALL BE INSTALLED FLUSH WITH FINISHED FLOOR, OR AS REQUIRED BY LOCAL CODE AUTHORITY.
10. PLUMBING PIPING SYSTEMS SHALL BE INSULATED PER BUILDING ENERGY EFFICIENCY STANDARDS (E.E.S.) SECTION 123.
11. PLUMBING EQUIPMENT SHALL BE CERTIFIED BY AND COMPLY WITH THE STATE OF CALIFORNIA ENERGY CONSERVATION STANDARDS (E.E.S.) SECTION 113. COMPLIANCE CERTIFICATES SHALL BE PROVIDED WITH EQUIPMENT SUBMITTALS.
12. WATER HEATERS FOR DOMESTIC HOT WATER SHALL COMPLY WITH THE STATE OF CALIFORNIA ENERGY EFFICIENCY STANDARDS (E.E.S.) SECTION 113.
13. ALL INSULATING MATERIALS INSTALLED MUST BE CERTIFIED BY CALIFORNIA ENERGY COMMISSION TO MEET C.E.C. ENERGY EFFICIENCY STANDARDS (E.E.S.) SECTION 118, 123 AND 124.
14. ALL HOSE BIBBS INSTALLED SHALL BE EQUIPPED WITH VACUUM BREAKERS.
15. SANITARY SEWER AND STORM DRAIN PIPING BELOW GRADE TO FIVE (5) FEET OUT OF BUILDING: HUBLESS CAST IRON OR ABS (AS APPROVED BY LOCAL CODE AUTHORITY). STORM, SOIL, WASTE, AND VENT PIPING, ABOVE GRADE, WITHIN BUILDING: HUBLESS CAST IRON SOIL PIPE WITH NEOPRENE SLEEVES AND STAINLESS STEEL COUPLINGS. ABS DWV PIPING MAY BE USED BELOW GRADE WITHIN BUILDING. PRESSURE WASTE PIPING: TYPE "L" COPPER WITH WROUGHT COPPER SWEAT FITTINGS AND 95/5 SOLDER.
16. WATER CLOSETS SHALL CONSUME NO MORE THAN 1.28 GALLONS PER FLUSH. URINALS SHALL CONSUME NO MORE THAN 0.5 GALLON PER FLUSH. (IN SAN DIEGO COUNTY, BOTH FIXTURES SHALL BE LISTED ON THE WATER AUTHORITY "LIST OF APPROVED LOW CONSUMPTION FIXTURES").
17. LAVATORY FAUCETS IN PUBLIC TOILET ROOMS SHALL BE THE SELF CLOSING TYPE.
18. ALL LAVATORY FAUCETS SHALL DISCHARGE A MAXIMUM OF 0.4 GPM.
19. ANTI-SCALD MIXING VALVES SHALL BE PROVIDED AT TUB/SHOWER CONTROLS.
20. ALL SHOWERHEADS SHALL DISCHARGE A MAXIMUM OF 2.0 GPM.
21. ALL WATER HEATERS SHALL COMPLY WITH UPC 2010 SECTION 608.3.
22. PLUMBING FIXTURES, FAUCETS AND COMPONENTS WITH EXPOSURE TO POTABLE WATER SYSTEM FOR HUMAN CONSUMPTION SHALL COMPLY WITH AB 1953.
23. ALL SINK FAUCETS SHALL DISCHARGE A MAXIMUM OF 1.8 GPM.
24. BUILDING DRAIN AND VENT PIPING MATERIALS SHALL COMPLY WITH SECTIONS 701.0 AND 903.0 OF THE CALIFORNIA PLUMBING CODE.
25. FLOOR DRAINS OR SIMILAR TRAPS DIRECTLY CONNECTED TO THE DRAINAGE SYSTEM AND SUBJECT TO INFREQUENT USE SHALL BE PROVIDED WITH AN APPROVED AUTOMATIC MEANS OF MAINTAINING THEIR WATER SEALS.
26. POTABLE WATER PIPING SHALL BE COPPER TUBE ASTM B88 TYPE L WITH COPPER PRESSURE FITTINGS ASME 16.18 CAST COPPER ALLOY OR ASME 16.22 WROUGHT COPPER JOINED BY SOLDER FILLER METALS ASTM B32 LEAD FREE ALLOYS WITH WATER FLUSHABLE FLUX ACCORDING TO ASTM B813.
27. WATER HEATER SHALL BE ANCHORED OR STRAPPED TO RESIST HORIZONTAL DISPLACEMENT DUE TO EARTHQUAKE MOTION PER SECTION 508.2 CPC.
28. PLUMBING FIXTURES AND FITTINGS SHALL COMPLY WITH ALL THE REQUIREMENTS LISTED IN TABLES 5.303.2.2 OR 5.303.23 AND TABLE 5.303.6 IN THE CALIFORNIA GREEN BUILDING STANDARDS CODE.
29. BUILDING SEWERS SHALL COMPLY WITH CHAPTER 7 CPC.
30. SHOWERS AND TUB-SHOWER COMBINATIONS SHALL BE PROVIDED WITH MIXING VALVES PER SECTION 418 CPC.

PLUMBING LEGEND

SYMBOL	ABBREV.	DESCRIPTION
————	S OR W	SOIL OR WASTE ABOVE GRADE OR FLOOR
————	S OR W	SOIL OR WASTE BELOW GRADE OR FLOOR
—— SD ——	SD	STORM DRAIN ABOVE GRADE OR FLOOR
—— SD ——	SD	STORM DRAIN BELOW GRADE OR FLOOR
— — — —	V	VENT
—— – ——	CW	COLD WATER
—— – – –	HW	HOT WATER
— – – – —	HWR	HOT WATER RETURN
—— G ——	G	GAS
	VALVE	SHUTOFF VALVE
—— F ——	F	FIRE SERVICE
	BC	BALANCING VALVE OR COCK
	BFV	BUTTERFLY VALVE
	BV	BALL VALVE
	SOV	SHUTOFF VALVE
		PIPING UP
		PIPING DOWN
	FS	FLOOR SINK
	FD	FLOOR DRAIN
	WHA	WATER HAMMER ARRESTOR

PLUMBING DRAWING LIST

SHEET NO.	SHEET TITLE
P0.1	PLUMBING LEGEND, SCHEDULES AND NOTES
P1.0	UNDERFLOOR PLUMBING PLAN
P1.1	FIRST FLOOR PLUMBING PLAN
P1.2	SECOND FLOOR & ROOF PLUMBING PLAN
P1.3	OBSERVATION FLOOR AND ROOF PLUMBING PLAN
P3.1	WASTE & VENT DIAGRAM & WATER RISER
P4.1	PLUMBING DETAILS

South Mission Beach Lifeguard Station
San Diego, California

P-1

SPEC. NO. 8147

me engineers
M-E Engineers, Inc.
3760 Convoy St. Suite 340
San Diego CA 92111
1.858.565.3800/1.858.565.3906
www.me-engineers.com

10/07/14

PLANS FOR THE CONSTRUCTION OF
South Mission Beach Lifeguard Station

PLUMBING LEGEND, SCHEDULES & NOTES — P0.1

CITY OF SAN DIEGO, CALIFORNIA
ENGINEERING & CAPITAL PROJECTS
ARCHITECTURAL, ENGINEERING & CONTRACTS DIVISION
SHEET 76 OF 94 SHEETS

WBS S-00791

FOR CITY ENGINEER — DATE 10/13/2014

SUBMITTED BY: JIHAD SLEMAN, PROJECT MANAGER
YOUSIF BENYAMIN, PROJECT ENGINEER
218-1893 CCS27 COORDINATES
1858-6255 CCS83 COORDINATES

DESCRIPTION	BY	APPROVED	DATE	FILMED
ORIGINAL	L.A.B			

CONTRACTOR ____ DATE STARTED ____
INSPECTOR ____ DATE COMPLETED ____

32849-76-D

© COPYRIGHT October 07, 2014 at 2:14PM

KEYED NOTES:

1. 2" W UP TO FLOOR DRAIN
2. 2" W UP TO FLOOR SINK
3. 1/2" TRAP PRIMER LINE
4. 1-1/2" VENT UP FROM FLOOR DRAIN OR SHOWER DRAIN
5. 2" W UP TO SINK
6. 3" W UP TO JS
7. 1-1/2" V UP
8. 4" SAN UP/2" V UP TO WC
9. 2" W UP TO LAV
10. 2" W UP TO IWR
11. 2" W UP TO WASHER BOX
12. 4" SAN UP TO WATER CLOSET
13. SEAL ALL FOUNDATION WALL PENETRATIONS WITH LINKSEAL.

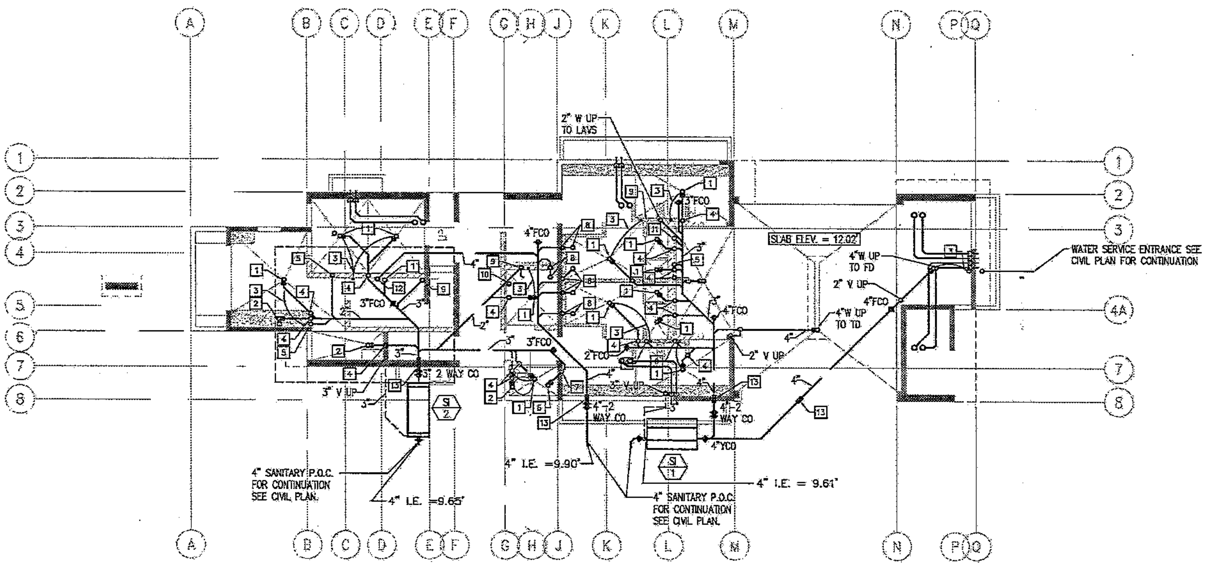

(A) UNDERFLOOR PLUMBING PLAN

SCALE: _" = 1'-0"

South Mission Beach Lifeguard Station
San Diego, California

P-2

SPEC. NO. 8147

M-E Engineers, Inc.
3760 Convoy St. Suite 340
San Diego CA 92111
t.858.565.3800/f.858.565.3806
www.me-engineers.com

10/07/14

PLANS FOR THE CONSTRUCTION OF
South Mission Beach Lifeguard Station

UNDERFLOOR PLUMBING PLAN — P1.0

CITY OF SAN DIEGO, CALIFORNIA
ENGINEERING & CAPITAL PROJECTS
ARCHITECTURAL ENGINEERING & CONTRACTS DIVISION
SHEET 77 OF 94 SHEETS

WBS S-00791

FOR CITY ENGINEER — DATE 10/13/2014

SUBMITTED BY: JIHAD SLEMAN, PROJECT MANAGER
YOUSIF BENYAMIN, PROJECT ENGINEER
216-1693 CCS27 COORDINATES
1858-6253 CCS83 COORDINATES

DESCRIPTION	BY	APPROVED	DATE	FILMED
ORIGINAL	L A B			

CONTRACTOR ______ DATE STARTED ______
INSPECTOR ______ DATE COMPLETED ______

32849-77-D

© COPYRIGHT October 01, 2014 #21292

November 10, 2014
South Mission Beach Lifeguard Station

ADDENDUM "A"

GENERAL NOTES:

1. PROVIDE CONDENSATE DRAINAGE TO HVAC EQUIPMENT.

KEYED NOTES:

1. 1-1/2" CW DN, 2" VENT UP, 4"W. DN TO W.C.(TYP)
2. 1/2" C & HW UP, 1-1/2" V UP, 2"W. DN TO LAV
3. 1/2" CW VALVED CONNECTION TO TRAP PRIMER
4. 1-1/2" VENT DN TO FLOOR DRAIN OR SHOWER DRAIN
5. 3/4" H & CW DN TO SHOWER
6. 3/4" H & CW DN, 1-1/2" VENT UP, 2"W. DN TO SHOWER
7. 3/4" H & CW DN, 1-1/2" VENT UP, 2"W. DN TO WB-1
8. 3/4" H & CW DN, 1-1/2" VENT UP, 2"W. DN TO SINK
9. 3/4" H & CW DN TO JS
10. 1/2" H & CW UP, 2" W UP TO LAV
11. 3/4" CW UP, 1/2" HW UP, 2"W UP
12. CONNECT 3/4" CONDENSATE FROM F.C. TO SINK TAILPIECE
13. 2" WASTE DN WITH 2" FINISHED WALL CLEANOUT
14. 3/4" CW DN TO HOSE BIBB
15. 3/4" VALVED CW CONNECTION TO ICE MACHINE. PROVIDE AND INSTALL WATER FILTER SYSTEM PER ICE MAKER MANUFACTURER'S RECOMMENDATIONS.
16. 3/4" VALVED C & HW CONNECTION TO HOSE BIBB
17. STORM PIPING UP TO ROOF DRAIN
18. STORM PIPING DN TERMINATE OUTSIDE BUILDING W/ST-1
19. OVERFLOW STORM PIPING UP TO OVERFLOW ROOF DRAIN
20. OVERFLOW STORM PIPING DN TERMINATE OUTSIDE BUILDING W/ST-1
21. 2" W UP TO IWR
22. 2" W DN
23. 3" V DN FROM SI-2
24. INCREASE STORM AND OVERFLOW STORM PIPING SIZE FROM 2" TO 3" TRANSITIONING FROM VERTICAL TO HORIZONTAL

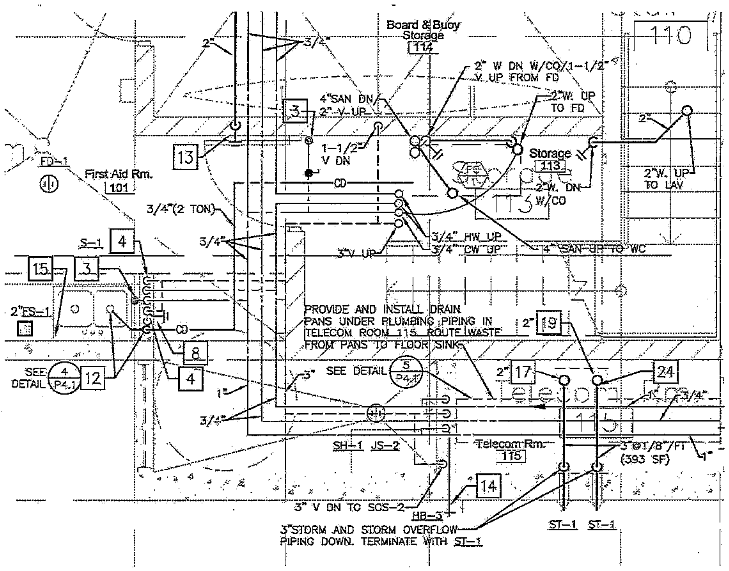

D ENLARGED FLOOR PLAN

SCALE: 1/2" = 1'-0"

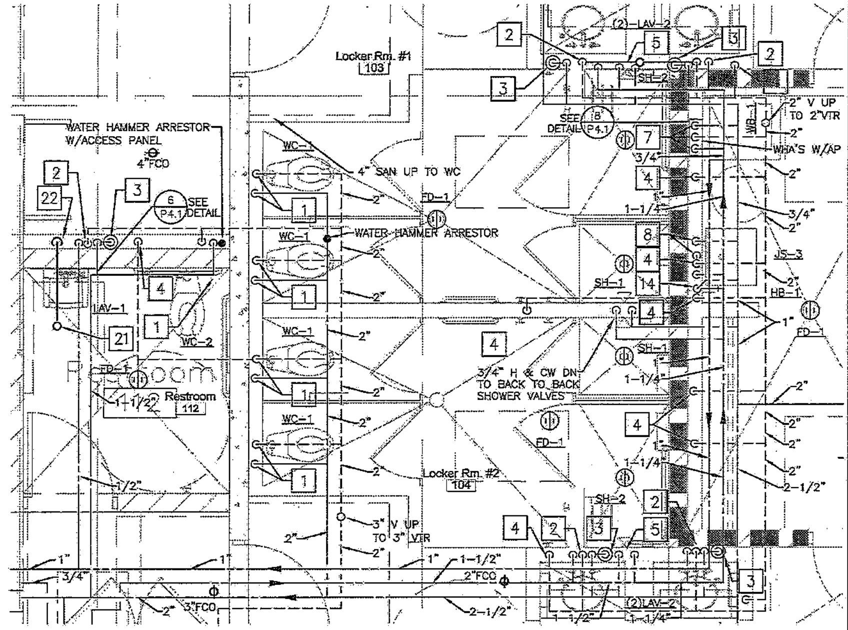

B ENLARGED FLOOR PLAN

SCALE: 1/2" = 1'-0"

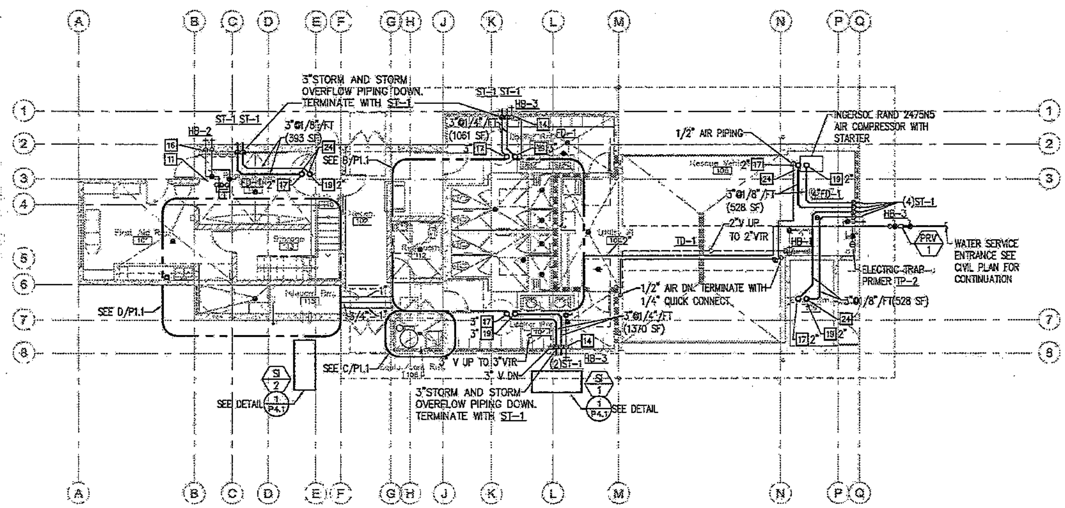

A FIRST FLOOR PLUMBING PLAN

SCALE: _" = 1'-0"

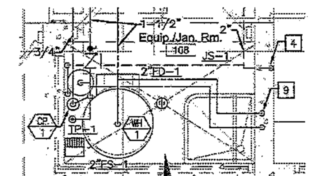

C ENLARGED EQUIPMENT/JAN ROOM PLAN

SCALE: 1/2" = 1'-0"

South Mission Beach Lifeguard Station

San Diego, California

P-3

M-E Engineers, Inc.
3760 Convoy St. Suite 340
San Diego CA 92111
www.me-engineers.com

10/07/14

PLANS FOR THE CONSTRUCTION OF

South Mission Beach Lifeguard Station

FIRST FLOOR PLUMBING PLAN | P1.1

CITY OF SAN DIEGO, CALIFORNIA

SHEET 78 OF 94 SHEETS

S-00791

10/13/2014

32849-78-D

November 10, 2014

South Mission Beach Lifeguard Station

ADDENDUM "A"

GENERAL NOTES:

1. PROVIDE CONDENSATE DRAINAGE TO HVAC EQUIPMENT.

KEYED NOTES:

[1] PROVIDE AND INSTALL WATER FILTER SYSTEM FOR REFRIGERATOR ICE MAKER PER MANUFACTURER'S RECOMMENDATIONS UNDER SINK KS-1 IF REFRIGERATOR IS NOT FURNISHED WITH FILTER. ROUTE PIPING FROM FILTER TO ICEMAKER BOX. SEE DETAIL 7/P4.1

[2] 2" STORM PIPING UP TO RD-1(309 SF)

[3] 2" OVERFLOW STORM PIPING UP TO ORD-1(309 SF)

[4] INCREASE STORM AND OVERFLOW STORM PIPING SIZE FROM 2" TO 3" TRANSITIONING FROM VERTICAL TO HORIZONTAL

[5] 3"STORM AND STORM OVERFLOW PIPING DOWN. TERMINATE WITH ST-1

[6] THRU WALL SCUPPER

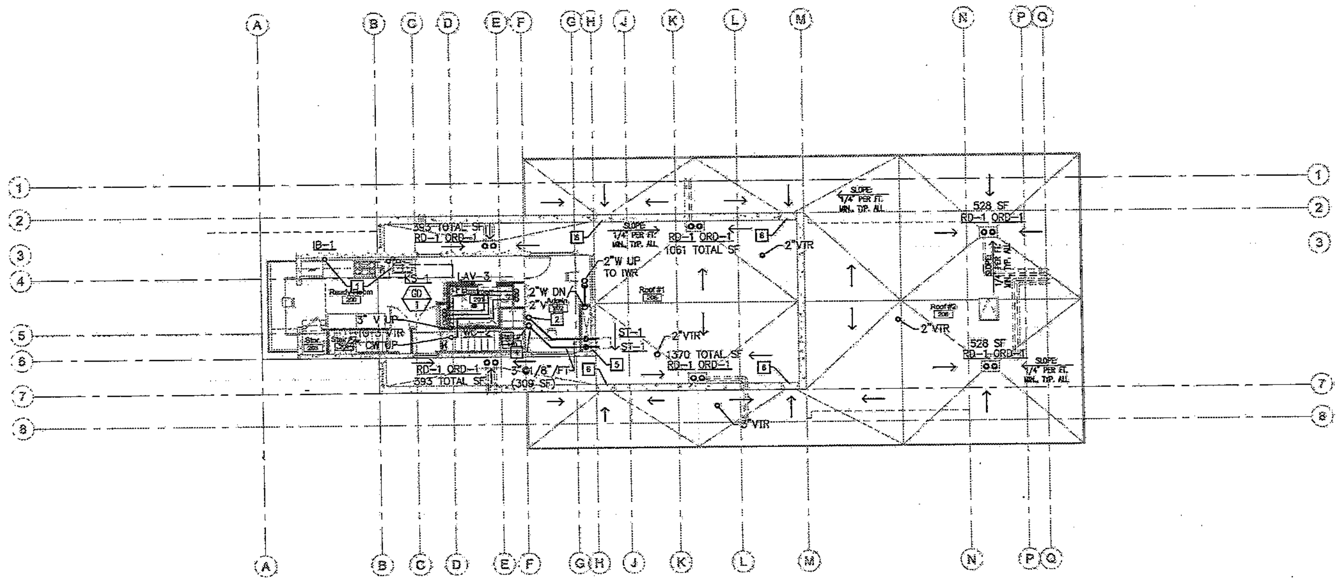

SECOND FLOOR / ROOF PLAN

SECOND FLOOR AND ROOF PLUMBING PLAN

SCALE: _" = 1'-0"

ADDENDUM "A"

P-4

SPEC. NO. 8147

M-E Engineers, Inc.
3760 Convoy St. Suite 340
San Diego CA 92111
t.858.565.3800/f.858.565.3805
www.me-engineers.com

10/07/14

PLANS FOR THE CONSTRUCTION OF

South Mission Beach Lifeguard Station

SECOND FLOOR & ROOF PLUMBING PLAN — P1.2

CITY OF SAN DIEGO, CALIFORNIA
ENGINEERING & CAPITAL PROJECTS
ARCHITECTURAL ENGINEERING & CONTRACTS DIVISION
SHEET 79 OF 94 SHEETS

WBS S-00791

FOR CITY ENGINEER — DATE 10/13/2014

SUBMITTED BY: JIHAD SLEIMAN, PROJECT MANAGER

YOUSIF BENYAMIN, PROJECT ENGINEER

216-1693 CCS27 COORDINATES

1858-6253 CCS83 COORDINATES

DESCRIPTION	BY	APPROVED	DATE	FILMED
ORIGINAL	L A B			

CONTRACTOR ______ DATE STARTED ______
INSPECTOR ______ DATE COMPLETED ______

32849-79-D

South Mission Beach Lifeguard Station
San Diego, California

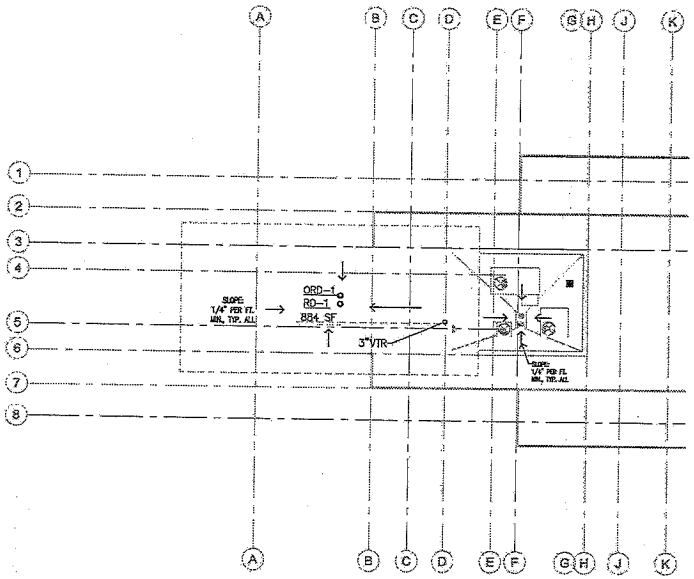

OBSERVATION LEVEL ROOF PLUMBING PLAN

SCALE: _" = 1'-0"

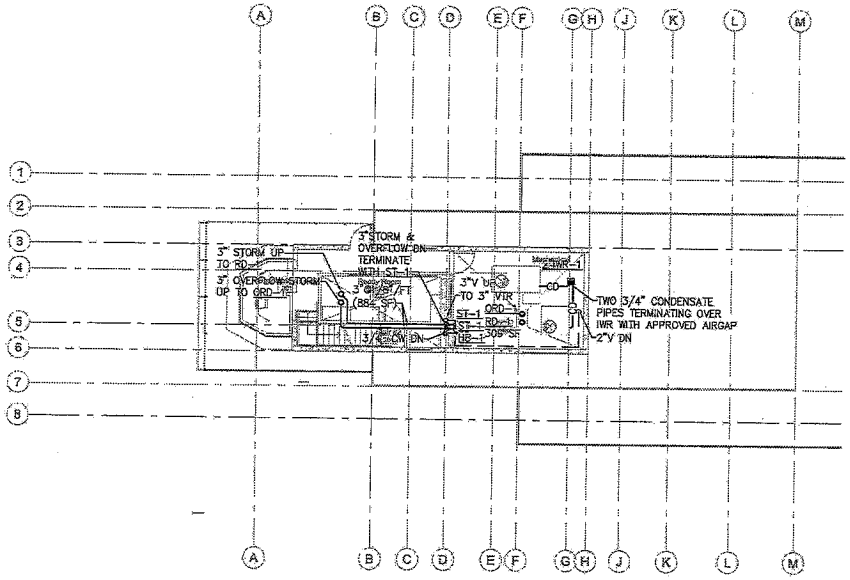

OBSERVATION FLOOR PLUMBING PLAN

SCALE: _" = 1'-0"

ADDENDUM "A"

P-5

me engineers
M-E Engineers, Inc.
3760 Convoy St. Suite 340
San Diego CA 92111
t 858.565.3800 / f 858.565.3806
www.me-engineers.com

SPEC. NO. 8147

REGISTERED PROFESSIONAL ENGINEER
LAWRENCE A. BRENNAN
NO. M10665
MECHANICAL
STATE OF CALIFORNIA
10/07/14

PLANS FOR THE CONSTRUCTION OF
South Mission Beach Lifeguard Station

OBSERVATION FLOOR AND ROOF PLUMBING PLAN

P1.3

CITY OF SAN DIEGO, CALIFORNIA
ENGINEERING & CAPITAL PROJECTS
ARCHITECTURAL, ENGINEERING & CONTRACTS DIVISION
SHEET 80 OF 94 SHEETS

WBS S-00791

FOR CITY ENGINEER — DATE 10/13/2014

SUBMITTED BY: JAMAD SLEIMAN, PROJECT MANAGER
YOUSIF BENYAMIN, PROJECT ENGINEER
215-1693, CCS27 COORDINATES
1856-6253, CCS83 COORDINATES

DESCRIPTION	BY	APPROVED	DATE	FILMED
ORIGINAL	L A B			

CONTRACTOR _____ DATE STARTED _____
INSPECTOR _____ DATE COMPLETED _____

32849-80-D

Proprietary design. These drawings and design are protected by common law copyright. All printable material contained herein and originating with Dentry + Associates Architects & Dimensions LLP shall be the property of Dentry + Associates Architects & Dimensions LLP

© COPYRIGHT October 07, 2014 at 5:58 PM

November 10, 2014
South Mission Beach Lifeguard Station

South Mission Beach Lifeguard Station
San Diego, California

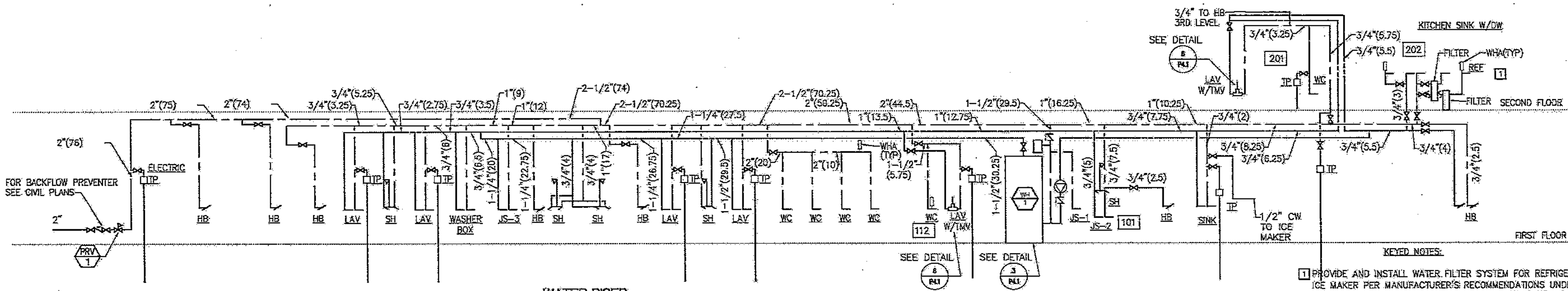

1. PROVIDE AND INSTALL WATER FILTER SYSTEM FOR REFRIGERATOR ICE MAKER PER MANUFACTURER'S RECOMMENDATIONS UNDER SINK KS-1 IF REFRIGERATOR IS NOT FURNISHED WITH FILTER. ROUTE PIPING FROM FILTER TO ICEMAKER BOX

KEYED NOTES:

WATER RISER

NO SCALE

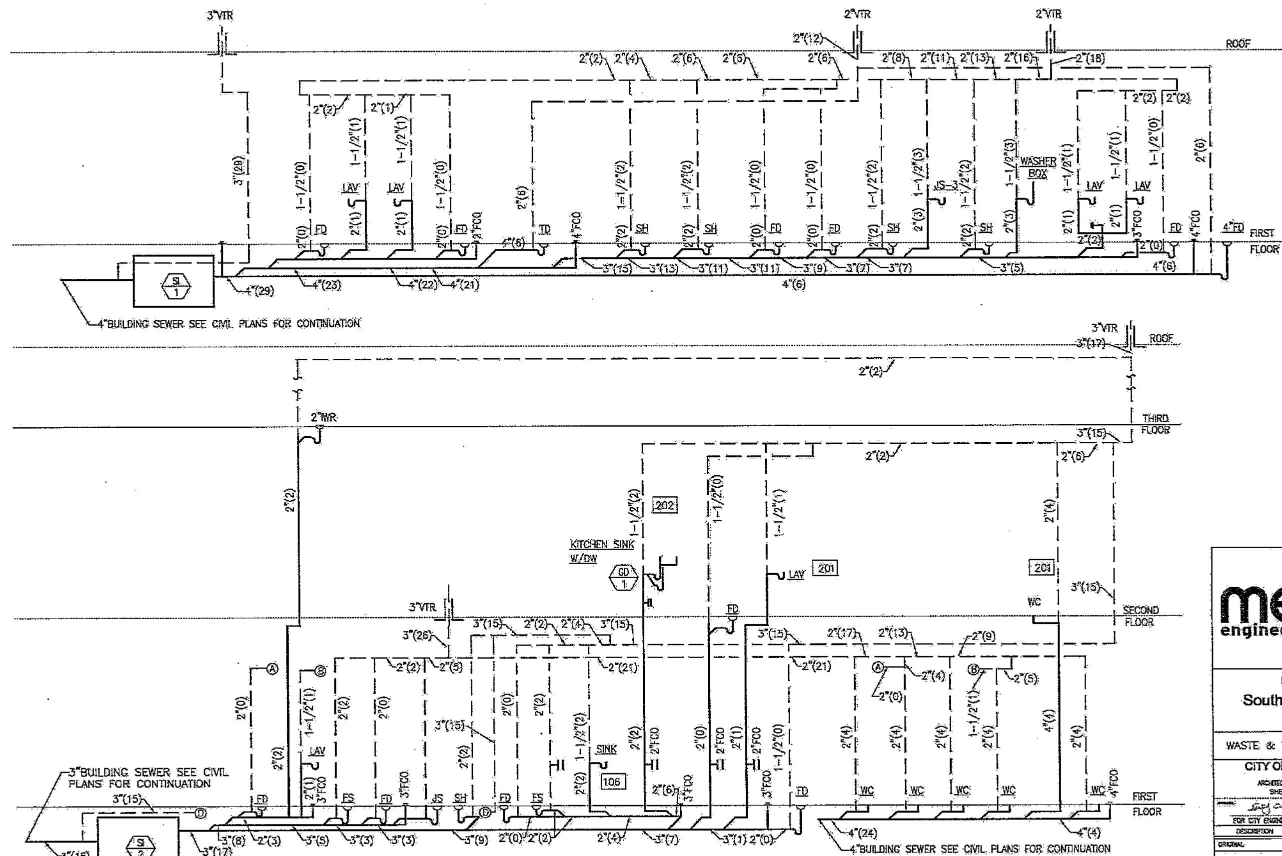

WASTE + VENT DIAGRAM

NO SCALE

DOMESTIC WATER CALCULATIONS

WATER SUPPLY FIXTURES

TYPE	NO.	FU/FT EACH	FU/FT TOTAL	FU/FV EACH	FU/FV TOTAL
TOILETS	6	–	–	6	30
URINALS	0	–	–	–	0
LAVATORIES	6	1	6	–	–
SER. SINK	2	3	6	–	–
SER. SINK FTG	1	3	3	–	–
FIRST AID SINK	1	2	2	–	–
SHOWERS	5	2	10	–	–
KITCHEN SINK	1	1.5	1.5	–	–
DISHWASHER	1	1.5	1.5	–	–
CLOTHESWASHER	1	4	4	–	–
DRINKING FOUN.	0	0.5	0	–	–
HOSE BIBBS	1	2.5	2.5	–	–
HOSE BIBBS*	6	1	6	–	–
ICE MACHINE	1	1	1	–	–
SUBTOTAL	–	–	44.5	–	30

74.5 TOTAL FU'S = 60 GPM

AVAILABLE PRESSURE

HI = 129#, LOW = 119#

BUILDING

PRV SET PRESSURE		70 PSI
PRV FALLOFF		10 PSI
REQUIRED AT LAST FIXTURE		35.0 PSI
ELEVATION HEAD	18 FT	
AT .4335 PSI/FT		8 PSI
PRESSURE AVAILABLE		17 PSI
DEVELOPED LENGTH	130 FT X 1.5	195 FT
	17 X 100/195	
AVAILABLE FOR FRICTION LOSS INSIDE BLDG		8.7 PSI

COLD WATER					HOT WATER		
Pipe Size Inches	A GPM	Velocity (fps)	A Flush Tank (SFU)	B Flush Valve (SFU)	GPM	Velocity (fps)	C Flush Tank (SFU)
1/2	3.1	4.3	3.00	0	3.1	4.3	3.00
3/4	[illegible]	[illegible]	[illegible]	0	[illegible]	5.0	[illegible]
1	15.4	6.0	21	0	12.2	5.0	17
1-1/4	23.5	6.0	36	6	[illegible]	5.0	[illegible]
1 1/2	33.3	6.0	60	19	27.7	5.0	48
2	[illegible]	[illegible]	[illegible]	[illegible]	[illegible]	5.0	[illegible]
2 1/2	69.2	6.0	315	166	74.4	5.0	245
3	[illegible]	[illegible]	[illegible]	[illegible]	[illegible]	5.0	[illegible]
4	224.0	6.0	1135	1135	186.8	5.0	840

P-6

SPEC. NO. 8147

M-E Engineers, Inc.
3760 Convoy St. Suite 340
San Diego CA 92111
t.858.565.3900/f.858.565.3906
www.me-engineers.com

10/07/14

PLANS FOR THE CONSTRUCTION OF

South Mission Beach Lifeguard Station

WASTE & VENT DIAGRAM & WATER RISER | P3.1

CITY OF SAN DIEGO, CALIFORNIA
ENGINEERING & CAPITAL PROJECTS
ARCHITECTURAL ENGINEERING & CONTRACTS DIVISION
SHEET 81 OF 94 SHEETS

WBS S-00791

FOR CITY ENGINEER — DATE 10/13/2014

SUBMITTED BY: JIHAD SLEIMAN, PROJECT MANAGER

DESCRIPTION	BY	APPROVED	DATE	FILMED
ORIGINAL	L A B			

YOUSIF BENYAMIN, PROJECT ENGINEER

218-1893 CCS27 COORDINATES

1859-6253 CCS83 COORDINATES

CONTRACTOR ______ DATE STARTED ______
INSPECTOR ______ DATE COMPLETED ______

32849-81-D

ADDENDUM "A"

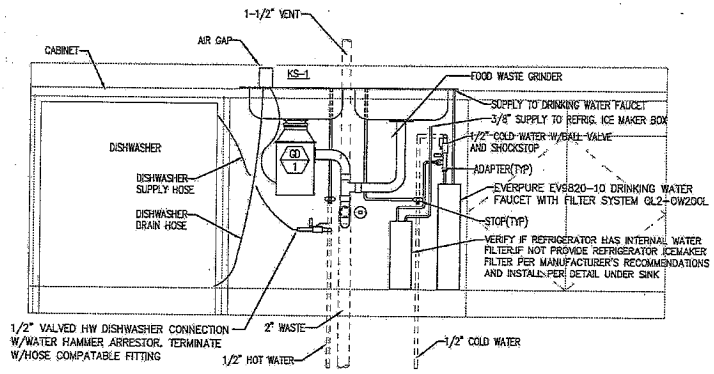

KITCHEN SINK DETAIL

NO SCALE

7 / P4-1

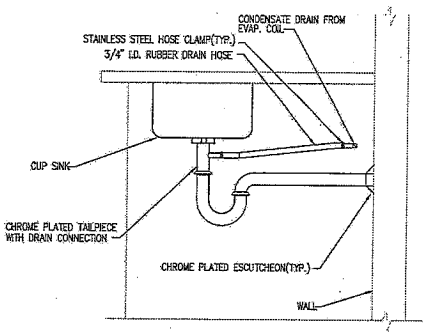

CONDENSATE CONN. TO LAV TAILPIECE

NO SCALE

4 / P4-1

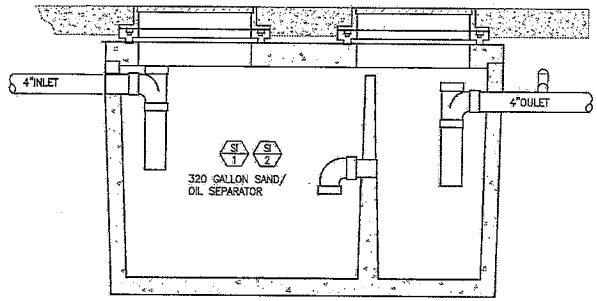

SAND/OIL SEPARATOR

NO SCALE

1 / P4-1

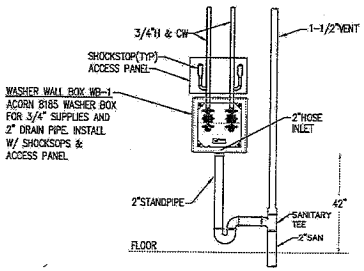

WASHER BOX DETAIL

NO SCALE

8 / P4-1

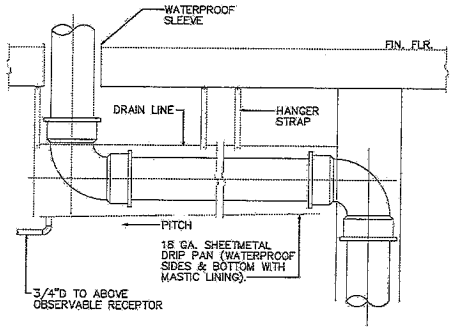

DRAIN PAN DETAIL

NO SCALE

5 / P4-1

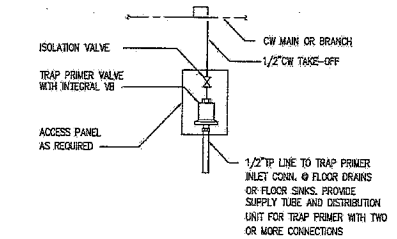

TRAP PRIMER DETAIL

NO SCALE

2 / P4-1

FIXTURES & FITTINGS		WATER CONSUMPTION		WATER
MARK	DESCRIPTION	STANDARD	DESIGN	SAVINGS
WC-1	WATER CLOSET	1.60 GALLONS/MINUTE	1.28 GALLONS/MINUTE	20%
WC-2	WATER CLOSET	1.60 GALLONS/MINUTE	1.28 GALLONS/MINUTE	20%
LAV-1	LAV (METERED)	0.25 GALLONS/CYCLE	0.20 GALLONS/CYCLE	20%
LAV-2	LAVATORY	0.50 GALLONS/MINUTE	0.35 GALLONS/MINUTE	30%
LAV-3	LAVATORY	0.50 GALLONS/MINUTE	0.35 GALLONS/MINUTE	30%
S-1	SINK	2.20 GALLONS/MINUTE	1.80 GALLONS/MINUTE	18%
KS-1	KITCHEN SINK	2.20 GALLONS/MINUTE	1.50 GALLONS/MINUTE	32%
SH-1	SHOWERHEAD	2.50 GALLONS/MINUTE	1.75 GALLONS/MINUTE	30%
SH-2	SHOWERHEAD	2.50 GALLONS/MINUTE	1.75 GALLONS/MINUTE	30%

NOTE:

PLUMBING FIXTURES (WATER CLOSETS AND URINALS) AND FITTINGS (FAUCETS AND SHOWERHEADS) SHALL MEET THE STANDARDS REFERENCED IN TABLE 5.303.6 OF DIVISION 5.3 OF THE 2010 GREEN CODE.

INDOOR WATER USE TABLE

NO SCALE

9 / P4-1

NOTE:

LAV-1 IS SINGLE TEMPERED SUPPLY PUSHBUTTON
LAV-3 -S A SINGLE HANDLE FAUCET REQUIRING A TEMPERED HOT AND A COLD SUPPLY.

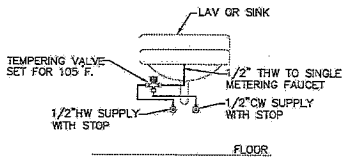

LAVATORY TEMPERING VALVE DETAIL

NO SCALE

6 / P4-1

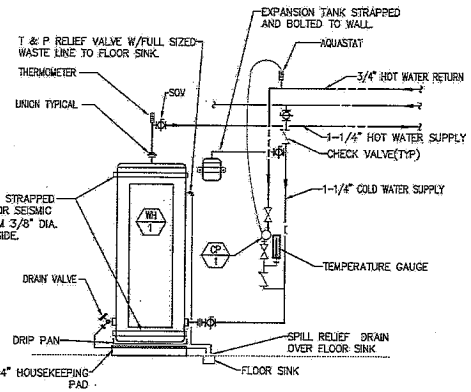

ELECTRIC WATER HEATER DETAIL

NO SCALE

3 / P4-1

P-7

me engineers
M-E Engineers, Inc.
9760 Cowley St. Suite 340
San Diego CA 92111
t 858.560.2800/f 858.560.2806
www.me-engineers.com

SPEC. NO. 6147

10/07/14

PLANS FOR THE CONSTRUCTION OF
South Mission Beach Lifeguard Station

PLUMBING DETAILS — P4.1

CITY OF SAN DIEGO, CALIFORNIA
ENGINEERING & CAPITAL PROJECTS
ARCHITECTURAL ENGINEERING & CONTRACTS DIVISION
SHEET ___ OF ___ SHEETS

FOR CITY ENGINEER — DATE: 10/13/2014

WBS: S-00791

SUBMITTED BY: JIHAD SLEIMAN, PROJECT MANAGER

DESCRIPTION	BY	APPROVED	DATE	PLANS
ORIGINAL	L.A.S			

YOUSIF BENYAMIN, PROJECT ENGINEER

1256-1801 COORD COORDINATES

1858-6253 GRIDS COORDINATES

CONTRACTOR _____ DATE STARTED _____
INSPECTOR _____ DATE COMPLETED _____

32849-82-D

Preliminary design. These drawings and design are protected by common law copyright. All parts/data/material contained herein and originating with Downey + Associates Architects @ Gonsalves & Gonsalves LLP shall be the property of Downey + Associates Architects @ Gonsalves & Gonsalves LLP

© COPYRIGHT October 01, 2014 at 1:16 PM

Proprietary design: These drawings and design are protected by common law copyright. All patentable material contained herein and originating with Domusstudio LLP shall be the property of Domusstudio LLP. © COPYRIGHT October 14, 2014

LIGHTING/SWITCHING SYMBOLS

- LIGHTING CONTROL PANEL, SEE CONTROL DETAIL AND SCHEDULES FOR MORE INFORMATION.
- PUSH BUTTON LOW VOLTAGE OVERRIDE CONTROL SWITCH
- ZONE CONTROLLED (UPPER CASE LETTER DENOTES ZONE CONTROLLED)
- SWITCH LEG CONTROLLED (LOWER CASE LETTER DENOTES SWITCH LEG CONTROLLED)
- SaSb — SWITCH, SINGLE POLE 20A, MTD. 48" AFF TO TOP. DESIGNATION TO CONTROL LIGHTING IN CIRCUIT LEGS. DEVICE: WHITE COVERPLATE: WHITE
  - 2- DOUBLE POLE — K - KEYED SWITCH
  - 3- THREE WAY — T - MANUAL MOTOR STARTER WITH THERMAL OVERLOADS
  - 4- FOUR WAY — D - LOAD RATED DIMMER
  - PL - PILOT LIGHT — PB - PUSHBUTTON
- WALL MOUNTED MOTION CONTROLLED LIGHTING SWITCH WITH INTEGRAL BI-LEVEL SWITCHING. DEVICE - WHITE MTD. 48" AFF TO TOP.
- CEILING MOUNTED ULTRASONIC MOTION SENSOR. DEVICE: WHITE
- WALL MOUNTED DUAL-TECHNOLOGY MOTION SENSOR. DEVICE: WHITE
- 1-100-A — FIXTURE CALLOUT:
  - TYPE (SEE LIGHT FIXTURE SCHEDULE)
  - WATTAGE
  - QUANTITY
- RELAY
- TIME CLOCK
- PHOTOCELL
- EPO — EMERGENCY POWER OFF PUSHBUTTON, MOUNTED AT +48" UON.

TEL/DATA SYMBOLS

- DATA OUTLET WITH TRIM RING, PULLSTRING TO ACCESSIBLE CEILING SPACE. +18" A.F.F. TO CENTER.
- TELEPHONE OUTLET WITH TRIM RING, PULLSTRING TO ACCESSIBLE CEILING SPACE. +18" A.F.F. TO CENTER.
- TELECOMMUNICATIONS OUTLET WITH TRIM RING, PULLSTRING TO ACCESSIBLE CEILING SPACE +18" A.F.F. TO CENTER.
- TELECOMMUNICATION OUTLET FLUSH FLOOR MOUNTED ON FIRE RATED POKE-THRU.
- SPEAKER BACK BOX LOCATION
- INTERCOM J-BOX LOCATION
- ELECTROMAGNETIC DOOR HOLDER
- INTERCOM LOCATION
- CARD READER
- ELECTRIC DOOR STRIKE
- 3/4" FIRE RATED PLYWOOD BACKBOARD WITH #6AWG GROUND TO BUILDING SYSTEM GROUND.
- CABLE TRAY PER PLANS. COORDINATE ROUTING WITH OTHER DISIPLINES.

GENERAL NOTES

1. EXTERIOR LIGHTING SYSTEM SHALL BE EQUIPPED WITH AUTOMATIC TIMING DEVICE AND CONTROL SHUT-OFF BETWEEN 11PM & 6AM UNLESS USING LPS LAMP TYPE LUMINAIRES
2. ALL CONDUITS SHALL BE CONCEALED. IF EXPOSED CONDUITS ARE PROPSED CONTRACTOR SHALL PROVIDE SHOP DRAWINGS INDICATING LAYOUT FOR APPROVAL PRIOR TO INSTALLATION
3. ALL ELECTRICAL DEVICES AND UTILIZATION EQUIPMENT SHALL BE LISTED BY AN APPROVED TESTING AGENCY
4. ALL WORK TO COMPLY WITH THE 2013 EDITION OF THE CALIFORNIA ELECTRICAL CODE
5. USE COPPER CONDUCTORS ONLY
6. THERMOSTATS, SWITCHES AND/OR RECEPTACLES INSTALLED IN RESTROOMS OR OTHER AREAS EQUIPPED FOR THE DISABLED, SHALL BE LOCATED AT NOT TO EXCEED 48" TO TOP OF BOX FROM THE FLOOR.
5. ALL 120V RECEPTACLES IN KITCHEN AREAS SHALL BE GFCI PROTECTED
6. CONTRACTOR IS TO VERIFY MOUNTING HEIGHTS OF ALL DEVICES PRIOR TO MOUNTING
7. VERIFY ROUTING OF ANY SURFACE MOUNTED CONDUITS PRIOR TO INSTALLATION
8. REVIEW ALL PLANS BY OTHER TRADES AND PROVIDE ADDITIONAL WORK AS REQUIRED NOT OUTLINED IN THESE DOCUMENTS
9. COORDINATE ALL DIMMING FLUORESCENT BALLASTS WITH DIMMING SYSTEM, PROVIDE WIRE COUNT AS REQUIRED. USE ADVANCE MARK X BALLASTS.
10. ELECTRICAL CONTRACTOR SHALL PROVIDE MULTI-POLE CIRCUIT BREAKERS WITH COMMON TRIP OR U.L. LISTED HANDLE TIES FOR ALL MULTI-POLE CIRCUITS WITH SHARED NEUTRAL
11. ALL LIGHTING CONTROLS SHALL BE CERTIFIED BY THE MANUFACTURER AND LISTED IN THE ENERGY COMMISSION DIRECTORIES
12. ALL COPPER CONDUCTORS SHOWN ARE TO BE STRANDED
13. ALL RECEPTACLES SHALL BE 20A TAMPERPROOF
14. ALL PANELS AND SWITCHGEAR SHALL BE PROPERLY LABELED AND CONTAIN ARC FLASH POTENTIAL RATING

POWER SYMBOLS

- JUNCTION BOX
- WALL MOUNTED JUNCTION BOX
- DUPLEX RECEPTACLE MTD 18" AFF TO CENTER COVERPLATE COLOR: WHITE

DEVICE TYPE	DEVICE COLOR
STANDARD	WHITE
IG ISOLATED GROUND	ORANGE
D DEDICATED 20A RATED	GRAY
UPS 15A OR 20A UPS	GRAY
EM EMERGENCY	RED

- GFI DUPLEX RECEPTACLE MTD 18" AFF TO CENTER COVERPLATE COLOR: WHITE
- DOUBLE DUPLEX RECEPTACLE MTD 18" AFF TO CENTER. SCHEDULE AS NOTED ABOVE.
- SPLIT WIRED 15A 1/2 HOT, 1/2 SWITCHED OUTLET COLOR: WHITE
- 208V/1Ø RECEPTACLE, NEMA CONFIGURATION AS NOTED.
- 208V/3Ø RECEPTACLE, NEMA CONFIGURATION AS NOTED.
- FLUSH FLOOR MOUNTED DUPLEX RECEPTACLE.
- FLOOR BOX WITH DOUBLE DUPLEX RECEPTACLE AND SINGLE GANG TEL/DATA RECEPTACLE.
- FLOOR BOX WITH DUPLEX RECEPTACLE AND SINGLE GANG TEL/DATA RECEPTACLE.
- SPECIALTY FLOOR BOX PER PLANS MULTIPLE GANG BOX; SEE SPECS.
- PEDESTAL MOUNTED DOUBLE DUPLEX RECEPTACLE MANUF: HUBBELL SA6608 W/STAINLESS STEEL COVERPLATES
- PEDESTAL MOUNTED DUPLEX RECEPTACLE MANUF: HUBBELL#SA6686 W/STAINLESS STEEL COVERPLATES
- ROOF MOUNTED WEATHERPROOF GFI WORK OUTLET. PROVIDE CAST BOX W/STAINLESS STEEL WP COVER.
- EXTERNALLY OPERATED FUSED DISCONNECT SWITCH. PROVDE PER NEMA RATING REQUIRED.
- COMBINATION FVNR MAGNETIC MOTOR STARTER AND DISCONNECT RATING AND POLES AS INDICATED. PROVIDE WITH OVERLOAD PER HORSEPOWER REQUIREMENTS, CPT, H.O.A. WITH PILOT LIGHTS, PROVIDE WITH (1) EACH N.O. AND N.C. AUX CONTACTS.
- FVNR MAGNETIC STARTER WITH OVERLOAD PER HORSEPOWER REQUIREMENTS, CPT, H.O.A. WITH PILOT LIGHTS, PROVIDE WITH (1) EACH N.O. AND N.C. AUX CONTACTS.
- MOTOR PROVIDED BY OTHERS.
- FLUSH MOUNTED PANELBOARD
- SURFACE MOUNTED PANELBOARD
- SURFACE MOUNTED LIGHTING CONTROL PANEL, U.O.N.
- FLUSH MOUNTED LIGHTING DIMMING PANEL, U.O.N.
- FIRE RATED DOUBLE DUPLEX POKE THROUGH, SEE DETAILS FOR MORE INFORMATION.
- FIRE RATED SYSTEMS FURNITURE FEED POKE THROUGH, SEE DETAILS FOR MORE INFORMATION.
- CLOCK HANGER OUTLET ONLY. MOUNTED AT +__" U.O.N.
- TELEVISION SYSTEM OUTLET WITH JACK, WALL MOUNTED AT +12" U.O.N.
- MULTI-OUTLET ASSEMBLY, LENGTH AS INDICATED ON PLANS.
- FLEXIBLE CONDUIT
- WIRING OR CONDUIT CONCEALED IN WALL OR CEILING
- WIRING OR CONDUIT EXPOSED
- WIRING OR CONDUIT CONCEALED UNDERGROUND OR IN FLOOR
- RACEWAY OR WIREWAY ASSEMBLY DOWN
- RACEWAY OR WIREWAY ASSEMBLY UP
- HOMERUN TO PANEL. CIRCUITS AS INDICATED.
- UNDERGROUND HOMERUN TO PANEL. CIRCUITS AS INDICATED.
- CONCEALED EMT CONDUIT WITH THHN WIRE 2#12 AWG 3/4" C. MINIMUM
- CONCEALED EMT CONDUIT WITH THHN WIRE 3#12 AWG 3/4" MINIMUM. CHEVRONS INDICATE #10 CONDUCTORS
- FUSED SWITCH. SEE SINGLE LINE DIAGRAM FOR MORE INFORMATION.
- CIRCUIT BREAKER. SEE SINGLE LINE DIAGRAM FOR MORE INFORMATION.
- TRANSFORMER. SEE SINGLE LINE DIAGRAM FOR MORE INFORMATION.
- CURRENT TRANSFORMER
- AUTOMATIC TRANSFER SWITCH
- GROUNDING ELECTRODE

ABBREVIATIONS

A	AMPERES
AC	ALTERNATING CURRENT
AIC	AMPERES INTERRUPTING CAPACITY
AFF	ABOVE FINISHED FLOOR
AFG	ABOVE FINISHED GRADE
AF	AMP FRAME/AMP FUSE
AL	ALUMINUM
ARCH	ARCHITECT OR ARCHITECTURAL
AS	AMP SWITCH
AT	AMP TRIP
ATS	AUTOMATIC TRANSFER SWITCH
AUX	AUXILIARY
AWG	AMERICAN WIRE GAUGE
BKBD	BACKBOARD
C	CONDUIT WITH WIRE
CATV	CABLE TELEVISION
CCTV	CLOSED CIRCUIT TELEVISION
CB	CIRCUIT BREAKER
CLF	CURRENT LIMITING FUSE
C.O.	CONDUIT ONLY WITH NYLON PULL CORD
CONTR	CONTRACTOR
CU	COPPER
CT	CURRENT TRANSFORMER
CW	COLD WATER
D	DEDICATED OUTLET
DC	DIRECT CURRENT
DF	DRINKING FOUNTAIN
DIA	DIAMETER
DISC	DISCONNECT
DIST	DISTRIBUTION
DWGS	DRAWINGS
EA	EACH
EB	90-MINUTE BATTERY CONNECTED TO UNIT
EC	ELECTRICAL CONTRACTOR
EG	EMERGENCY GENERATOR CONNECTION
EF	EXHAUST FAN
ELECT	ELECTRICAL
ELEV	ELEVATION/ELEVATOR
EMT	ELECTRO-METALLIC TUBING
EXIST	EXISTING
FA	FIRE ALARM
FC	FOOT CANDLE
FIXT	FIXTURE
FLUOR	FLUORESCENT
FT.	FEET OR FOOT
GC	GENERAL CONTRACTOR
GD	GARBAGE DISPOSAL
GEN	GENERATOR
GFI	GROUND FAULT INTERRUPTER
GFR	GROUND FAULT RELAY
GRD	GROUND
H	HORIZONTAL
HID	HIGH INTENSITY DISCHARGE
HP	HORSEPOWER
HPS	HIGH PRESSURE SODIUM
HR	HOUR
HT	HEIGHT
HZ	HERTZ
IG	ISOLATED GROUND BUS OR WIRE
IMC	INTERMEDIATE METAL CONDUIT
INCAND	INCANDESCENT
J-BOX	JUNCTION BOX
KVA	KILO-VOLTAMPERE
KW	KILO-WATT
KWH	KILOWATT-HOUR
LF	LINEAL FEET
LTG	LIGHTING
LV	LOW VOLTAGE
MANUF	MANUFACTURER
MAX	MAXIMUM
MC	MECHANICAL CONTRACTOR
MCC	MOTOR CONTROL CENTER
MECH	MECHANICAL
MIN	MINIMUM
MH	METAL HALIDE
MLO	MAIN LUGS ONLY
MTG	MOUNTING
MV	MERCURY VAPOR
N	NEUTRAL
NEC	NATIONAL ELECTRIC CODE
NIC	NOT IN CONTRACT
NL	NIGHT LIGHT
NTS	NOT TO SCALE
OC	ON CENTER
OFCI	OWNER FURNISHED CONTRACTOR INSTALLED
OFOI	OWNER FURNISHED OWNER INSTALLED
P	PEDESTAL MOUNT
PB	PULL BOX
PC	PHOTOCELL CONTROL
PCTC	PHOTOCELL/TIMECLOCK CONTROL
PH	PHASE
PIV	POST INDICATING VALVE
PL	PILOT LIGHT
PVC	POLYVINYL CHLORIDE
PWR	POWER
PP	POWER POLE
QR	FIXTURE WITH QUARTZ RESTRIKE
QTY	QUANTITY
RECEPT	RECEPTACLE
REF	REFRIGERATOR
RGS	RIGID GALVANIZED STEEL
SD	SMOKE DETECTOR
SPEC	SPECIFICATION
SQ FT	SQUARE FEET OR SQUARE FOOT
SW	SWITCH
SWBD	SWITCHBOARD
TEMP	TEMPERATURE OR TEMPORARY
TV	TELEVISION
TEL, TELE	TELEPHONE
TC	TIME CLOCK
TRANSF	TRANSFORMER
TYP	TYPICAL
UGPS	UNDERGROUND PULL SECTION
UL	UNDERWRITERS LABORATORIES
UNO	UNLESS NOTED OTHERWISE
UPS	UNINTERRUPTIBLE POWER SUPPLY
V	VOLTS
VA	VOLT-AMPERE
WH	WATER HEATER
WP XFMR	WEATHER PROOF TRANSFORMER

E-1

SPEC. NO. E147

KRUSE & ASSOCIATES

PLANS FOR THE CONSTRUCTION OF
South Mission Beach Lifeguard Station

Symbols List — E0.1

CITY OF SAN DIEGO, CALIFORNIA
ENGINEERING & CAPITAL PROJECTS
ARCHITECTURAL ENGINEERING & CONTRACTS DIVISION
SHEET 83 OF 94 SHEETS

WBS S-00791

APPROVED: FOR CITY ENGINEER — DATE 10/13/2014

SUBMITTED BY: JIHAD SLEIMAN, PROJECT MANAGER
YOUSIF BENYAMIN, PROJECT ENGINEER

DESCRIPTION	BY	APPROVED	DATE	FILMED
ORIGINAL	KNK			

218-1893 CCS27 COORDINATES
1858-6253 CCS83 COORDINATES

CONTRACTOR ____ DATE STARTED ____
INSPECTOR ____ DATE COMPLETED ____

32849–83–D

ADDENDUM "A"

VOLTAGE 120/208	A.I.C. 42,000	PANEL "A"	MOUNTING SURFACE	MAINS LUGS ONLY
PHASE 3		LOCATION ELECTRIC ROOM		BUSSING 225A
WIRE 4		FEEDER SEE SINGLE LINE		FEED BOTTOM

LOCATION	WATTAGE ØA	WATTAGE ØB	WATTAGE ØC	LTG	REC	MIS	BKR	CIR	Ø	CIR	BKR	MIS	REC	LTG	WATTAGE ØA	WATTAGE ØB	WATTAGE ØC	LOCATION	
FIRST AID	1000				3		20	1	A	2	20		2		500			TTB	
ACCESS CONTROL		500				1	20	3	B	4	30/		1			2250		DRYER	
MISC. RECEPT.			720		3		20	5	C	6	/2		-				2250	---	
GARAGE	1000				2		20	7	A	8	20		1		1200			TOILET	
GARAGE		1000			2		20	9	B	10	20		1			1200		WASHER	
T-24, ELECT.			700		1	1	20	11	C	12	20	1					1000	STORAGE	
LOCKER	1200				2		20	13	A	14	20		3		600			WATCH ROOM	
LOCKER		1200			2		20	15	B	16	20		3			1200		TOILETS	
REFRIGERATOR			1900		1		20	17	C	18	20		1				900	GARB DISP.	
READY ROOM	1500				2		20	19	A	20	20		1		1500			DISHWASHER	
CLOSET		1000			4		20	21	B	22	20		1			1500		READY ROOM	
OVEN			5000		1		50/	23	C	24	20		1				1500	READY ROOM	
---	5000				-		/2	25	A	26	20			9	126			EXTERIOR	*
OBSERVATION		1000			2		20	27	B	28	20			23		1154		GARAGE, LOCKER, 4a	*
OBSERVATION			1000		2		20	29	C	30	20	1		20			590	LOCKER, RECEPTION	*
SIGN	1000					1	20	31	A	32	20			12	624			FIRST AID, STORAGE	*
EF-4 & 5		220				2	15	33	B	34	20	1		20		240		READY ROOM, OBSER.	*
MICROWAVE			1500		1		20	35	C	36	20		1				700	ICE MACHINE	
SPACE ONLY	–						0	37	A	38	20				—			SPARE	
SPACE ONLY		—					0	39	B	40	20			1		15		FLAG POLE	*
SPACE ONLY			—				0	41	C	42	0						--	SPACE ONLY	
SUBTOTAL	10700	4920	10820												4350	7559	6940		

TOTAL ØA 15050 ØB 12479 ØC 17760

TOTAL LOAD 45289 WATTS AT 120/208 V.,3Ø,4W.= 125.7 A.

HIGH PHASE 17760 WATTS AT 120 V.,1Ø,2W.= 148.0 A. DATE 03/05/14

* = ROUTE CIRCUIT THROUGH T-24 CONTROL PANEL

O = INTERLOCK WITH RTU-1

VOLTAGE 120/208	A.I.C. 42,000	PANEL "B"	MOUNTING SURFACE	MAINS LUGS ONLY
PHASE 3		LOCATION ELECTRIC ROOM		BUSSING 225A
WIRE 4		FEEDER SEE SINGLE LINE		FEED BOTTOM

LOCATION	WATTAGE ØA	WATTAGE ØB	WATTAGE ØC	LTG	REC	MIS	BKR	CIR	Ø	CIR	BKR	MIS	REC	LTG	WATTAGE ØA	WATTAGE ØB	WATTAGE ØC	LOCATION
EAH-1	550					1	15/	1	A	2	15/	1			799			CU-1
---		550				-	/2	3	B	4	/2	-				799		---
FC-1			291			1	15/	5	C	6	30/	1					1972	RTU-1
---	291					-	/2	7	A	8	/2	-			1972			---
CP-1		55				1	15	9	B	10	30/	1				2036		RTU-2
SF-6			121			1	15	11	C	12	/2	-					2038	---
DRYER	1200				1		20	13	A	14	20		1		1200			GARAGE DOOR
FIRE RISER		500				2	20	15	B	16	20		1			1200		GARAGE DOOR
RECEPTION			1000		2		20	17	C	18	0						—	SPACE ONLY
TV	450				1		20	19	A	20	0				—			SPACE ONLY
SF-1		700				1	15	21	B	22	0					—		SPACE ONLY
EXTERIOR			1000		5		20	23	C	24	0						—	SPACE ONLY
FACP	1000						20	25	A	26	0				—			SPACE ONLY
SPACE ONLY		—					0	27	B	28	0					—		SPACE ONLY
SPACE ONLY			—				0	29	C	30	0						—	SPACE ONLY
SPACE ONLY	—						0	31	A	32	0				—			SPACE ONLY
SPACE ONLY		—					0	33	B	34	0					—		SPACE ONLY
SPACE ONLY			—				0	35	C	36	0						—	SPACE ONLY
SPACE ONLY	—						0	37	A	38	0				—			SPACE ONLY
SPACE ONLY		—					0	39	B	40	0					—		SPACE ONLY
SPACE ONLY			—				0	41	C	42	0						—	SPACE ONLY
SUBTOTAL	3491	1805	2412												3971	4037	4010	

TOTAL ØA 7462 ØB 5842 ØC 6422

TOTAL LOAD 19726 WATTS AT 120/208 V.,3Ø,4W.= 54.8 A.

HIGH PHASE 7462 WATTS AT 120 V.,1Ø,2W.= 62.2 A. DATE 03/05/14

☐ = ROUTE CIRCUIT THROUGH T-24 CONTROL PANEL

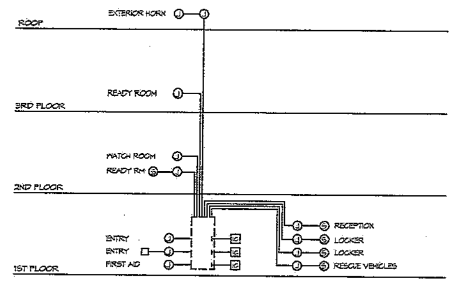

PA/INTERCOM RISER DIAGRAM

NO SCALE

LIGHT FIXTURE SCHEDULE

FIXTURE TYPE	FIXTURE SYMBOL	MANUFACTURER	CATALOG NUMBER	WATTS	VOLTS	MTG	LAMP TYPE	BUG	REMARKS
A		KENALL LIGHTING	MLHA12-48-R-CC-CP-1-45135K-DCC-1-120	50	120	CS	50W 35K LED	-	
B		PRESCOLITE	LP6LEDG4-6FLED764-35K-WT	26	120	CR	26W 35K LED	-	
C		KENALL LIGHTING	MLA813-PAN-AS-LG-1-14L35K-120	14	120	WS	14W 35K LED 1000 LUMENS	-	
D		KENALL LIGHTING	MS11FL-PP-CC-20L35K-1-DCC	20	120	CS	20W 35K LED	-	
E		ALKCO	LINCS 100 L28-120-WHG-35K-CSJT-3	9	120	UC	9W 35K LED	-	
F		BK LIGHTING	B-HP2-LED-TR-X22-SP-MAC-D15-120	15	120	G	15W LED	-	
G		DESIGN PLAN	LD6-L-1F-4-55-1-G-G	6	120	CR	6W LED	-	
H		COLUMBIA	LTRE22-35KHL-RPA-ED-U	40	120	CR	40W 35K LED	-	
J		CONTRAST	HEXDL-01-MG-35-30-M NW-HEX- 120-D2-P2	30	120	CR	30W LED	-	
K		LUMIUM	H1-CS-D-LED-SW-35K-4-U-SD-SC-MP-XX-SW-55-W-4-WP	20	120	CS	20W 35K LED	-	

MOUNTING TYPES:

WS-WALL SURFACE, WR-WALL RECESSED, CS-CEILING SURFACE, CR-CEILING RECESSED, CH-CHAIN, PN-PENDANT, U-UNIVERSAL, G-GROUND, P-POLE, UC-UNDER CABINET, T-TRACK, CB-CABLE, TR-TRELLIS, C-COVE

GENERAL NOTES

EXTERIOR FIXTURES SHALL BE POWDER COATED ALUMINUM AND CONTAIN A POLY-CARBONITE LENS

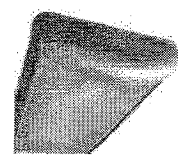

FIXTURE TYPE "A"

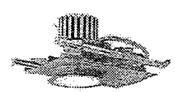

FIXTURE TYPE "B"

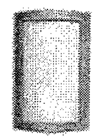

FIXTURE TYPE "C"

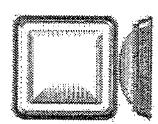

FIXTURE TYPE "D"

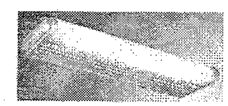

FIXTURE TYPE "E"

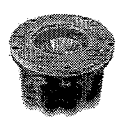

FIXTURE TYPE "F"

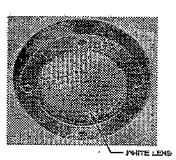

FIXTURE TYPE "G"

FIXTURE TYPE "H"

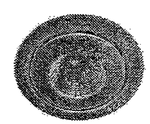

FIXTURE TYPE "J"

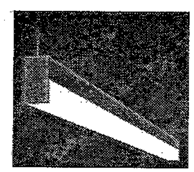

FIXTURE TYPE "K"

E-2

SPEC. NO. 8147

PLANS FOR THE CONSTRUCTION OF

South Mission Beach Lifeguard Station

Fixture Schedule & Panels | E0.2

CITY OF SAN DIEGO, CALIFORNIA
ENGINEERING & CAPITAL PROJECTS
ARCHITECTURAL ENGINEERING & CONTRACTS DIVISION
SHEET 84 OF 94 SHEETS

WBS S-00791

FOR CITY ENGINEER — DATE 10/13/2014

SUBMITTED BY: JIHAD SLEIMAN, PROJECT MANAGER

YOUSEF BENYAMIN, PROJECT ENGINEER

DESCRIPTION	BY	APPROVED	DATE	FILMED
ORIGINAL	KNK			

218-1823 CCS27 COORDINATES

1858-6253 CCS83 COORDINATES

CONTRACTOR ________ DATE STARTED ________

INSPECTOR ________ DATE COMPLETED ________

32849–84–D

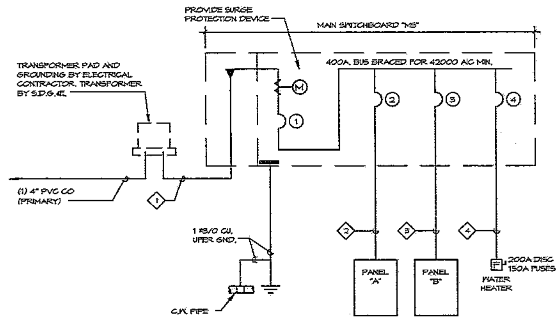

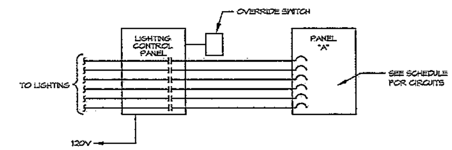

LIGHTING CONTROL DIAGRAM

NO SCALE

SINGLE LINE DIAGRAM - NO SCALE

FEEDER SCHEDULE

DEVICE NUMBER	C.B. OR S.W. SIZE	FUSE SIZE	FUSE TYPE	FEEDER NUMBER	CONDUITS & CONDUCTORS							
					CONDUIT TYPE	CONDUIT SIZE	CNDCTR. QUANTITY	CNDCTR. SIZE	CNDCTR. TYPE	GND. CU.	LENGTH	0/0 V.D.
1	400A3P	-	-	1	PVC.	4"	-	-	-	-	-	-
2	200A3P	-	-	2	PVC.	2"	4	3/0	CU.	6	-	-
3	100A3P	-	-	3	PVC.	2"	4	2	CU.	8	-	-
4	150A3P	-	-	4	PVC.	1 1/2"	3	1/0	CU.	6	-	-

SINGLE LINE DIAGRAM NOTES

1. VERTICAL BUS MAY BE TAPERED TO NOT LESS THAN 1/3 THE AMPACITY RATING OF THE MAIN HORIZONTAL BUS.
2. HORIZONAL AND VERTICAL BUS SHALL BE FULL LENGTH, AND BE RATED NO LESS THAN THE NOTED AIC RATED VALUE.
3. CONTRACTOR SHALL SUBMIT SWITCHBOARD SHOP DRAWINGS TO THE SERVING UTILITY FOR APPROVAL PRIOR TO FABRICATION. SWITCHBOARD SHALL COMPLY WITH SDG&E REQUIREMENTS.
4. CONTRACTOR TO SUBMIT 1/4" PLAN TO ENGINEER OF PROPOSED SWITCHGEAR LAYOUT TO CONFORM WITH MANUFACTURER'S SHOP DRAWINGS. SHOP DRAWING TO BE SUBMITTED AND APPROVED PRIOR TO UNDERGROUND ROUGH-IN.
5. ALL CONDUCTORS FEEDING PANELBOARDS SHALL BE COPPER TYPE 'THWN' WITH EMT CONDUIT. BRANCH CIRCUIT AND FEEDER CABLES IN ALL SIZES SHALL HAVE 'THW', 'THHN' OR 'THWN' INSULATION WITH EMT CONDUIT. AC CABLE IS NOT ALLOWED TO BE INSTALLED. A EQUIPMENT GROUND CONDUCTOR SHALL BE IN ALL FLEXIBLE CONDUITS. 'XHHW' TO BE USED AT ALL EXTERIOR LOCATION PANEL FEEDERS.
6. ALL EQUIPMENT SHOWN IS NEW UNLESS NOTED OTHERWISE.
7. ALL TERMINATION LUGS OF PANELS AND SWITCHBOARDS TO BE RATED TO ACCEPT 75 DEGREE CONDUCTORS.
8. THE CONTRACTOR SHALL PROVIDE A SERIES RATED SYSTEM TO ENSURE THAT ALL ELECTRICAL COMPONENTS OF THIS SYSTEM EXCEED THE MAXIMUM SHORT CIRCUIT WITHSTAND RATINGS AVAILABLE. PROVIDE ENGRAVED PHENOLIC NAMEPLATES ON ALL SWITCHBOARDS AND PANELBOARDS TO DENOTE THE USE OF SERIES RATED DEVICES. OVERCURRENT DEVICE ENCLOSURES WILL BE IDENTIFIED AS SERIES-RATED AND LABELED IN ACCORDANCE WITH NEC 110-22. THE OVERCURRENT DEVICES SHALL BE AIC RATED PER MANUFACTURERS' LABELING OF THE ELECTRICAL EQUIPMENT.
9. ALL MAIN SERVICE CIRCUIT BREAKERS SHALL BE 100% RATED.
10. FOR ALL PANELBOARDS SUPPLYING FIRE ALARM EQUIPMENT, PROVIDE LOCKABLE COVER, INDENTIFIED CIRCUIT BREAKER (RED), AND A BREAKER "LOCK-OFF" DEVICE.

LOAD SUMMARY

PANEL "A" — 46368 W.
PANEL "B" — 20493 W.
WATER HEATER — 45000 W.

111861 W. = 310.7 AMPS @ 120/208V., 3Ø., 4W.

E-3

SPEC. NO. 8147

PLANS FOR THE CONSTRUCTION OF
South Mission Beach Lifeguard Station

Single Line Diagram — E0.3

CITY OF SAN DIEGO, CALIFORNIA
ENGINEERING & CAPITAL PROJECTS
ARCHITECTURAL ENGINEERING & CONTRACTS DIVISION
SHEET 85 OF 94 SHEETS

WBS S-00791

APPROVED: FOR CITY ENGINEER — DATE 10/13/2014

SUBMITTED BY: JIHAD SLEIMAN, PROJECT MANAGER
YOUSIF BENYAMIN, PROJECT ENGINEER

DESCRIPTION	BY	APPROVED	DATE	FILMED
ORIGINAL	KNK			

218-1683 CCS27 COORDINATES
1858-6253 CCS83 COORDINATES

CONTRACTOR ______ DATE STARTED ______
INSPECTOR ______ DATE COMPLETED ______

32849-85-D

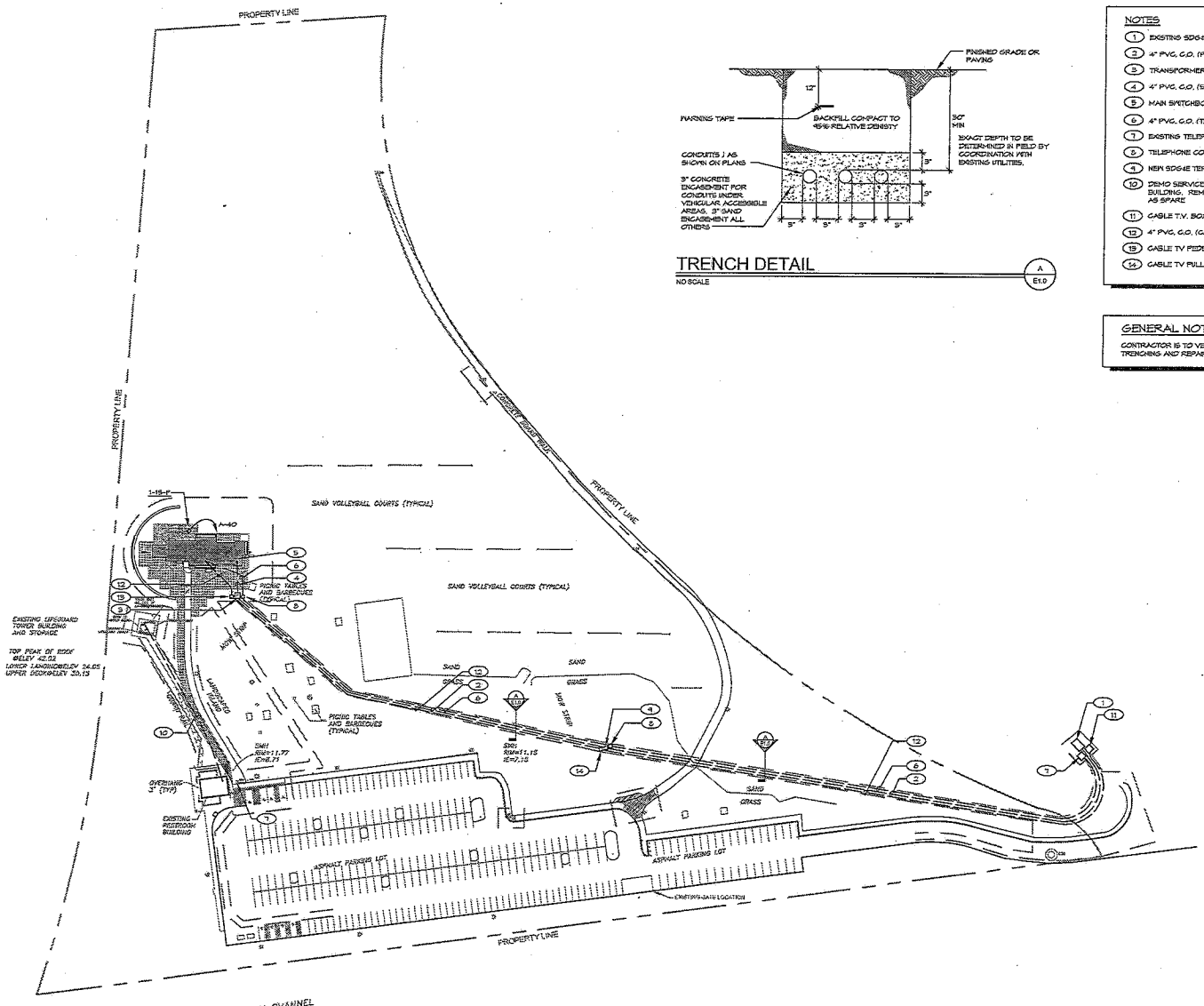

SITE ELECTRICAL PLAN

SCALE: 1" = 60'

TRENCH DETAIL

NO SCALE

A E1.0

NOTES

1. EXISTING SDG&E HAND HOLE
2. 4" PVC, C.O. (PRIMARY) CONCRETE ENCASED.
3. TRANSFORMER BY SDG&E CO. PAD AND GROUNDING BY ELECTRICAL CONTRACTOR.
4. 4" PVC, C.O. (SECONDARY) CONCRETE ENCASED
5. MAIN SWITCHBOARD "MS" 400A 120/208V3Ø
6. 4" PVC, C.O. (TELEPHONE)
7. EXISTING TELEPHONE COMPANY PULLBOX.
8. TELEPHONE COMPANY PULLBOX/PEDESTAL
9. NEW SDG&E TERMINATOR CABINET
10. DEMO SERVICES TO EXISTING LIFEGUARD STATION UPON COMPLETION OF NEW BUILDING. REMOVE CONDUCTORS, LABEL FEED BREAKER IN EXISTING RESTROOMS AS SPARE
11. CABLE T.V. BOX, VERIFY EXACT LOCATION
12. 4" PVC, C.O. (CABLE TV)
19. CABLE TV PEDESTAL
14. CABLE TV PULLBOX

GENERAL NOTES

CONTRACTOR IS TO VERIFY ROUTING OF CONDUITS ON SITE WITH CITY REP. PROVIDE ALL TRENCHING AND REPAIR ALL SERVICES TO ORIGINAL FINISH

E-4

SPEC. NO. 8147

KOUSE & ASSOCIATES

REGISTERED PROFESSIONAL ENGINEER DAVID L. KOUSE No. 18713 EXP. 06-30-14 ELECTRICAL STATE OF CALIFORNIA

PLANS FOR THE CONSTRUCTION OF

South Mission Beach Lifeguard Station

Site Plan - Electrical — E1.0

CITY OF SAN DIEGO, CALIFORNIA
ENGINEERING & CAPITAL PROJECTS
ARCHITECTURAL DESIGNING & CONSTRUCTION DIVISION
SHEET 20 OF 24 SHEETS

WBS S-00791

APPROVED 10/13/2014
FOR CITY ENGINEER DATE

SUBMITTED BY: JUHAD SLEIMAN PROJECT MANAGER

DESCRIPTION	BY	APPROVED	DATE	PLANS
ORIGINAL	KKK			

YOUSIF HENNAWI PROJECT ENGINEER

218-1863 COGO2 COORDINATES

1858-6253 COGS COORDINATES

CONTRACTOR _____ DATE STARTED _____
INSPECTOR _____ DATE COMPLETED _____

32849-86-D

Preliminary design. Shown drawings and design are the property of the consultant and may not be reproduced without permission. All common law rights reserved. ©2014 Kouse & Associates

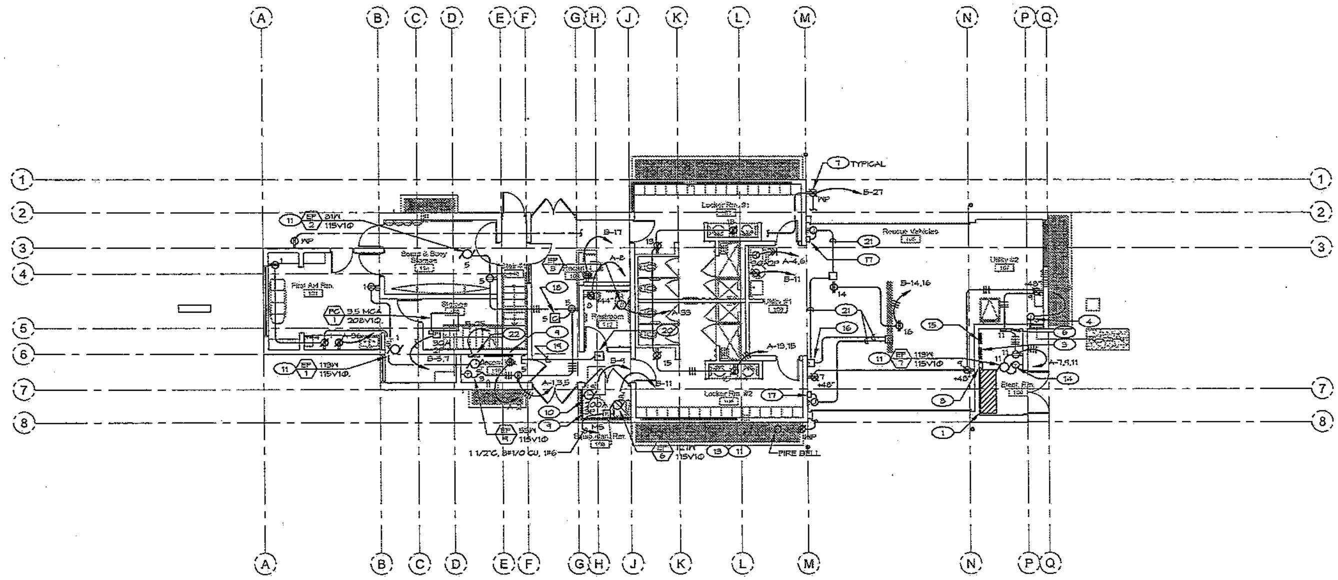

FIRST FLOOR POWER PLAN

1/8" = 1'-0"

NOTES:

1. MAIN SWITCHBOARD "MS"
2. THIS AREA IS CLASS 1, DIVISION 2 HAZARDOUS LOCATION. ALL ELECTRICAL DEVICES ARE TO BE SERVED FROM ABOVE.
3. PANEL "A"
4. FIRE SPRINKLER RISER, PROVIDE CONNECTION TO BELL
5. PLUGMOLD MOUNTED AT +44"
6. T-24 CONTROL PANEL
7. ALL EXTERIOR BOXES SHALL BE COLE TLS10
8. SURGE PROTECTION
9. WATER HEATER 45KW 208V3Φ.
10. CP-1 55W, 115V, 1Φ
11. INTERNAL DISCONNECT PROVIDED WITH UNIT
12. INTERLOCK WITH RTU-1
13. ROUTE THROUGH TITLE 24 CONTROL PANEL
14. LINE VOLTAGE T-STAT PROVIDED BY MECHANICAL CONTRACTOR INSTALLED BY ELECTRICAL CONTRACTOR
15. PANEL "B"
16. MASTER DOOR CONTROLLER PROVIDED BY DOOR SUPPLIERS
17. DOOR CONTROLLER PROVIDED BY DOOR SUPPLIERS
18. CARBON MONOXIDE SENSOR, KIDDE KN-COB-IC OR EQUAL
19. 2"C.O. RUN ABOVE CEILING
20. 8"X8"X6" PULLBOX ABOVE CEILING WITH 2"C.O. TO LOW ROOF, PROVIDE WEATHERHEAD
21. CONTROLLER WIRING, 3-WIRE LOW VOLTAGE
22. FIRE ALARM CONTROL PANEL

GENERAL NOTES

1. FIXTURE MOUNTED IN CONCRETE CEILING SHALL BE BLOCKED OUT DURING CONSTRUCTION. CORING AFTER POUR IS UNACCEPTABLE
2. ALL CONDUITS SHALL BE CONCEALED

E-5

SPEC. NO. 8147

KRUSE & ASSOCIATES

PLANS FOR THE CONSTRUCTION OF

South Mission Beach Lifeguard Station

1st Floor Power Plan — E2.0

CITY OF SAN DIEGO, CALIFORNIA
ENGINEERING & CAPITAL PROJECTS
ARCHITECTURAL ENGINEERING & CONTRACTS DIVISION
SHEET 87 OF 94 SHEETS

WBS S-00791

APPROVED: FOR CITY ENGINEER — DATE 10/13/2014

SUBMITTED BY: JIHAD SLEIMAN, PROJECT MANAGER

DESCRIPTION	BY	APPROVED	DATE	FILMED
ORIGINAL	KNK			

YOUSIF BENYAMIN — PROJECT ENGINEER

218-1893 — CCS27 COORDINATES

1858-6253 — CCS83 COORDINATES

CONTRACTOR ____ DATE STARTED ____
INSPECTOR ____ DATE COMPLETED ____

32849-87-D

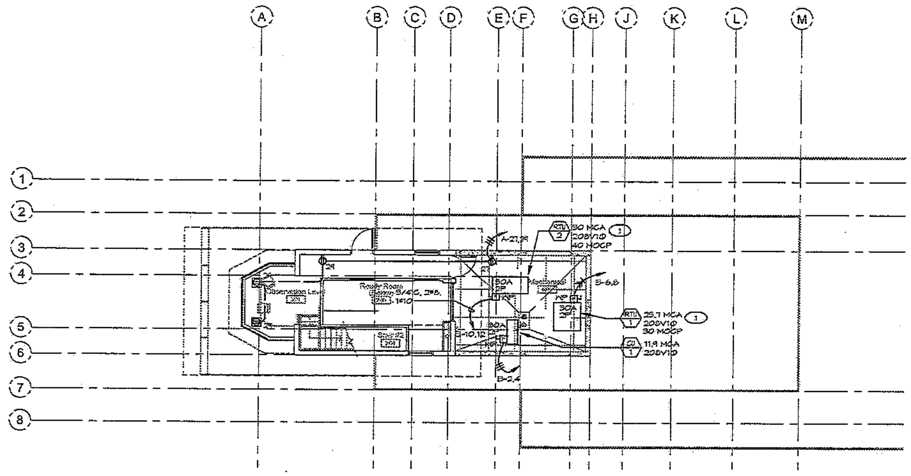

THIRD FLOOR POWER PLAN
1/8" = 1'-0"

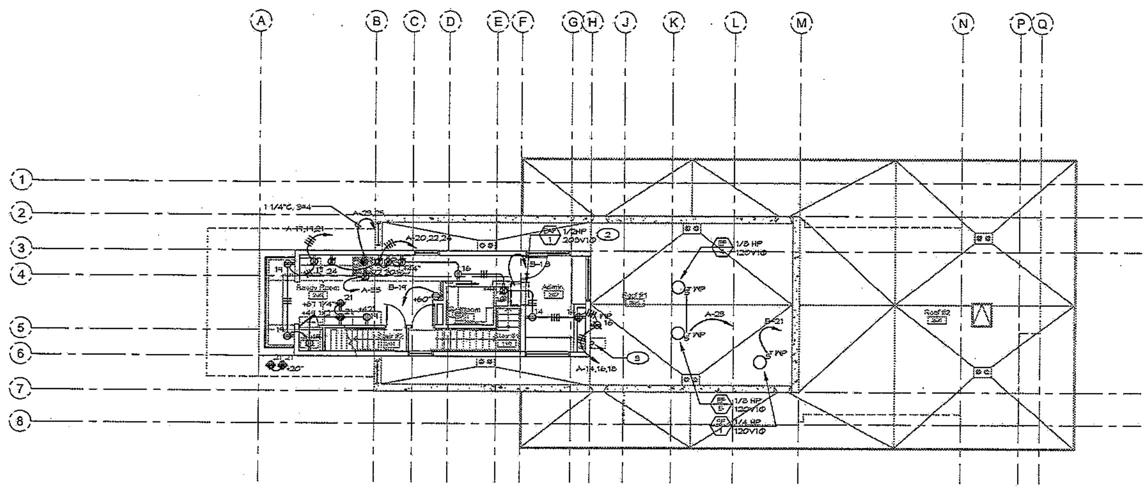

SECOND FLOOR POWER PLAN / ROOF PLAN
1/8" = 1'-0"

NOTES

1. INTERLOCK UNIT WITH EF-4 & EF-5
2. INTEGRAL DISCONNECT PROVIDED WITH UNIT
3. 2"C.O. WITH WEATHERHEAD

GENERAL NOTES

1. FIXTURE MOUNTED IN CONCRETE CEILING SHALL BE BLOCKED OUT DURING CONSTRUCTION. CORING AFTER POUR IS UNACCEPTABLE
2. ALL CONDUITS SHALL BE CONCEALED

E-6

SPEC. NO. 5147

KRUSE & ASSOCIATES

PLANS FOR THE CONSTRUCTION OF
South Mission Beach Lifeguard Station

2nd & 3rd Floor Power Plans — E2.1

CITY OF SAN DIEGO, CALIFORNIA
ENGINEERING & CAPITAL PROJECTS
ARCHITECTURAL ENGINEERING & CONTRACTS DIVISION
SHEET 83 OF 94 SHEETS

WBS S-00791

APPROVED: FOR CITY ENGINEER — DATE 10/13/2014

SUBMITTED BY: JIHAD SLEMAN, PROJECT MANAGER

YOUSIF BENYAMIN, PROJECT ENGINEER

DESCRIPTION	BY	APPROVED	DATE	FILMED
ORIGINAL	NNK			

218-1893 CCS27 COORDINATES
1858-6253 CCS83 COORDINATES

CONTRACTOR ______ DATE STARTED ______
INSPECTOR ______ DATE COMPLETED ______

32849—88—D

© COPYRIGHT October 14, 2014 at 3:30 PM. Proprietary design. These drawings and designs are protected by common law copyright. All rights reserved.

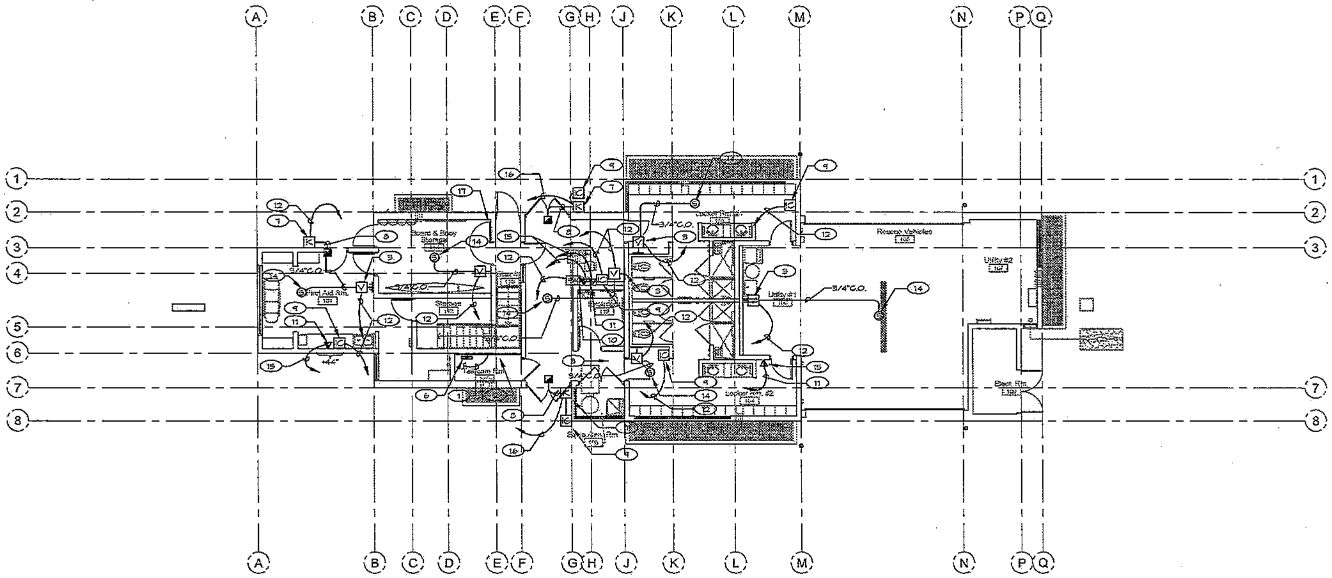

FIRST FLOOR TELEPHONE/DATA/INTERCOM

1/8" = 1'-0"

NOTES:

1. PROVIDE 1#6, CU, GND TO MAIN BUILDING GROUND PER TELEPHONE COMPANY REQUIREMENTS.
2. TELEPHONE TERMINAL BOARD "TTB" 4x8x3/4" PLYWOOD.
3. PROVIDE 4"x4" J-BOX WITH 2"x4" OPENING, FOR CITY PROVIDED AND INSTALLED VOLUME CONTROL
4. INSTALL OWNER FURNISHED BACKBOX FOR PA/INTERCOM, MOUNTED AT +48", PROVIDE
5. 3/4"C.O. TO PA/INTERCOM TERMINAL CABINET. SEE A/E0.2
6. PA/INTERCOM RACK PROVIDED AND INSTALLED BY CITY AT TOP OF BACKBOARD
7. PROVIDE 2"x4" J-BOX AT +48" FOR KEYLESS ENTRY. KEY-PAD PROVIDED AND INSTALLED BY CITY
8. PROVIDE 1/2" CONDUIT TO ELECTRIC DOOR STRIKE. COORDINATE WITH DOOR HARDWARE INSTALLER.
9. PROVIDE 2"x4" J-BOX AT +68" FOR CITY PROVIDED AND INSTALLED INTERCOM SUB-STATION.
10. PROVIDE 4"x4" J-BOX FOR PUBLIC ADDRESS SYSTEM PROVIDED AND INSTALLED BY CITY
11. PROVIDE 4"x4" J-BOX FOR CITY FURNISHED AND INSTALLED TELEPHONE AND DATA DEVICES
12. 3/4" C.O. TO (6)
13. INSTALL OWNERS BACKBOX FOR OWNERS FLUSH MOUNTED I.C. STATION. SEE A/E0.2
14. PROVIDE 4"x4" J-BOX FOR CITY FURNISHED AND INSTALLED 8" SPEAKER. SEE A/E0.2
15. 3/4" C.O TO (2)
16. 1" C.O TO (6)
17. THIS DOOR IS TO BE PROVIDED WITH A HOLD OPEN DEVICE. TIE TO P.A. SYSTEM

GENERAL NOTES

1. ALL BOXES TO BE 4"x4" WITH 2"x4" TRIM RING FOR BOXES IN MASONRY WALLS USE 2"x4" EXTRA DEEP
2. FIXTURE MOUNTED IN CONCRETE CEILING SHALL BE BLOCKED OUT DURING CONSTRUCTION. CORING AFTER POUR IS UNACCEPTABLE
3. ALL CONDUITS SHALL BE CONCEALED

E-7

SPEC. NO. 8147

PLANS FOR THE CONSTRUCTION OF

South Mission Beach Lifeguard Station

1st Floor Data Plan — E2.2

CITY OF SAN DIEGO, CALIFORNIA
ENGINEERING & CAPITAL PROJECTS
ARCHITECTURAL ENGINEERING & CONTRACTS DIVISION
SHEET 89 OF 94 SHEETS

WBS S-00791

FOR CITY ENGINEER — DATE 10/13/2014

SUBMITTED BY: JIHAD SLEMAN, PROJECT MANAGER

YOUSIF BENYAMIN, PROJECT ENGINEER

DESCRIPTION	BY	APPROVED	DATE	FILMED
ORIGINAL	KNK			

218-1803 CCS27 COORDINATES

1858-6253 CCS83 COORDINATES

CONTRACTOR ________ DATE STARTED ________
INSPECTOR ________ DATE COMPLETED ________

32849-89-D

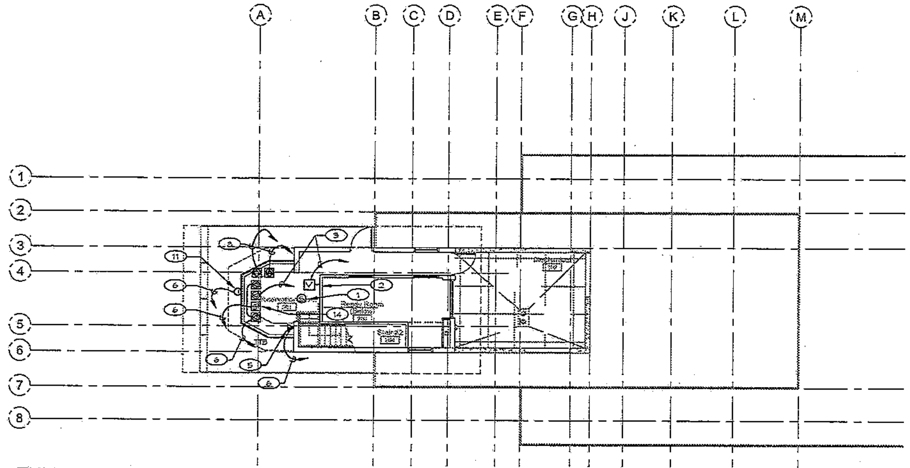

THIRD FLOOR DATA PLAN
1/8" = 1'-0"

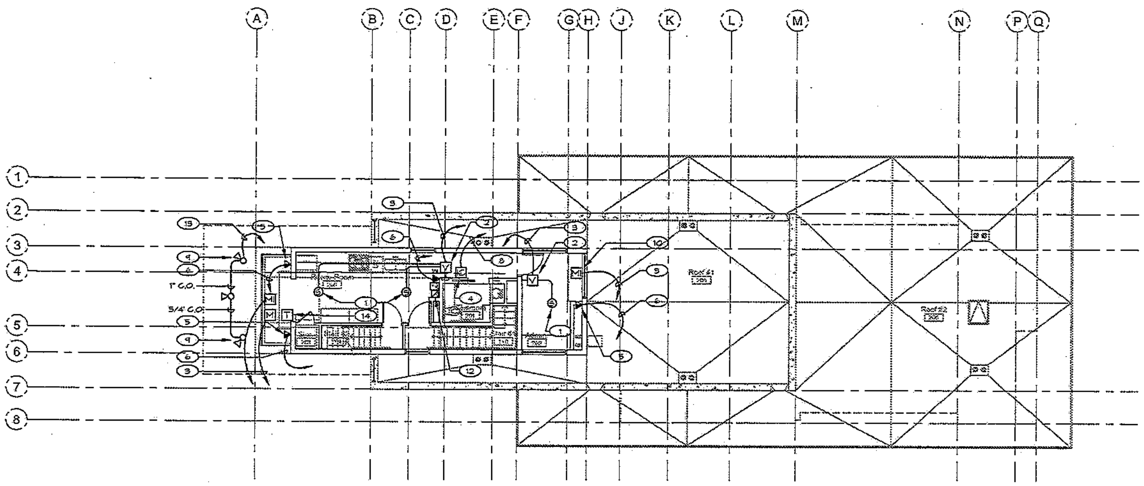

SECOND FLOOR DATA PLAN / ROOF PLAN
1/8" = 1'-0"

NOTES

1. PROVIDE SPECIALTY BACK BOX 4"x4" J-BOX FOR CITY FURNISHED AND INSTALLED 8" SPEAKER SEE A/E2.2
2. PROVIDE 2"x4" J-BOX FOR CITY PROVIDED AND INSTALLED VOLUME CONTROL
3. 3/4" C.O. TO PA/INTERCOM TERMINAL CABINET
4. PROVIDE 2"x4" J-BOX AT +65" FOR CITY PROVIDED AND INSTALLED INTERCOM SUB-STATION
5. PROVIDE 4"x4" J-BOX FOR CITY FURNISHED AND INSTALLED TELEPHONE AND DATA DEVICES
6. 3/4" C.O. TO TTB
7. PROVIDE FLUSH FLOOR MOUNTED (2) COMPARTMENT J-BOX FOR CITY PROVIDED AND INSTALLED TELEPHONE AND DATA DEVICES. TYPICAL OF 4
8. 1" C.O. TO PA/INTERCOM TERMINAL CABINET
9. 4"x4" J-BOX FOR CITY PROVIDED AND INSTALLED LOUD SPEAKER
10. 4"x4" J-BOX FOR CITY PROVIDED AND INSTALLED MICROPHONE
11. 4"x4" J-BOX FOR CITY PROVIDED AND INSTALLED ANTENNA
12. THIS DOOR IS TO BE PROVIDED WITH A HOLD OPEN DEVICE, TIE TO F.A. SYSTEM
13. 1 1/2" C.O. TO PA/INTERIOR TERMINAL CABINET
14. TOGGLE SWITCH FOR SPEAKER ELECTRIC (PA)

GENERAL NOTES

1. FIXTURE MOUNTED IN CONCRETE CEILING SHALL BE BLOCKED OUT DURING CONSTRUCTION. CORING AFTER POUR IS UNACCEPTABLE
2. ALL CONDUITS SHALL BE CONCEALED

E-8

KRUSE & ASSOCIATES

SPEC. NO. 5147

REGISTERED PROFESSIONAL ENGINEER GERALD L. GREEN No. E015891 Exp. 06-30-14 ELECTRICAL STATE OF CALIFORNIA

PLANS FOR THE CONSTRUCTION OF
South Mission Beach Lifeguard Station

2nd & 3rd Floor Data Plans | E2.3

CITY OF SAN DIEGO, CALIFORNIA
ENGINEERING & CAPITAL PROJECTS
ARCHITECTURAL ENGINEERING & CONTRACTS DIVISION
SHEET 90 OF 94 SHEETS

WBS S-00791

APPROVED: FOR CITY ENGINEER — DATE 10/13/2014

SUBMITTED BY: JIHAD SLEIMAN, PROJECT MANAGER

DESCRIPTION	BY	APPROVED	DATE	FILMED
ORIGINAL	KNK			

YOUSIF BENYAMIN
PROJECT ENGINEER
216-1893
CCS27 COORDINATES
1856-6253
CCS83 COORDINATES

CONTRACTOR ________ DATE STARTED ________
INSPECTOR ________ DATE COMPLETED ________

32849-90-D

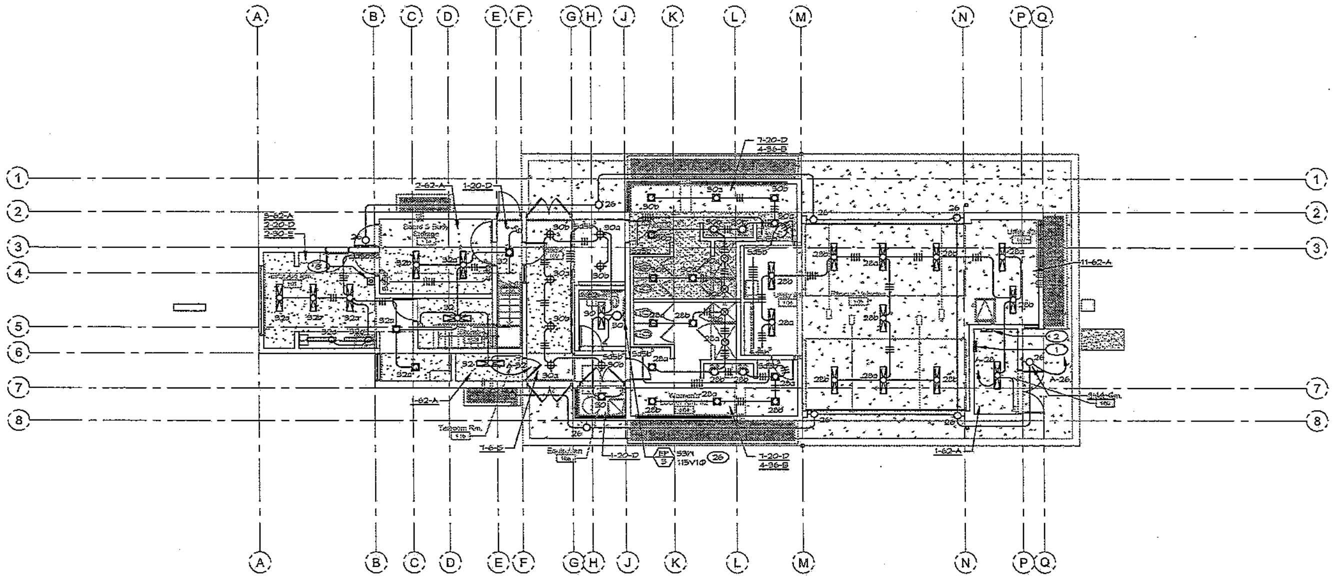

First Floor Lighting Plan

1/8" = 1'-0"

NOTES

1. PANEL "A"
2. T-24 CONTROL PANEL. COOPER LIGHT KEEPER LKB
3. T-24 OVERRIDE SWITCH.

GENERAL NOTES

1. FIXTURE MOUNTED IN CONCRETE CEILING SHALL BE BLOCKED OUT DURING CONSTRUCTION. CORING AFTER POUR IS UNACCEPTABLE
2. ALL CONDUITS SHALL BE CONCEALED

E-9

KRUSE & ASSOCIATES
LIGHTING AND ELECTRICAL DESIGN

SPEC. NO. 8147

REGISTERED PROFESSIONAL ENGINEER GERALD L. GREEN No. E015891 Exp. 06-30-14 ELECTRICAL STATE OF CALIFORNIA

PLANS FOR THE CONSTRUCTION OF
South Mission Beach Lifeguard Station

First Floor Lighting Plan | E3.0

CITY OF SAN DIEGO, CALIFORNIA
ENGINEERING & CAPITAL PROJECTS
ARCHITECTURAL ENGINEERING & CONTRACTS DIVISION
SHEET 91 OF 94 SHEETS

WBS S-00791

APPROVED: FOR CITY ENGINEER — DATE 10/13/2014

SUBMITTED BY: JIHAD SLEMAN, PROJECT MANAGER
YOUSIF BENYAMIN, PROJECT ENGINEER
218-1683 CCS27 COORDINATES
1858-6253 CCS83 COORDINATES

DESCRIPTION	BY	APPROVED	DATE	FILMED
ORIGINAL	KNK			

CONTRACTOR ______ DATE STARTED ______
INSPECTOR ______ DATE COMPLETED ______

32849-91-D

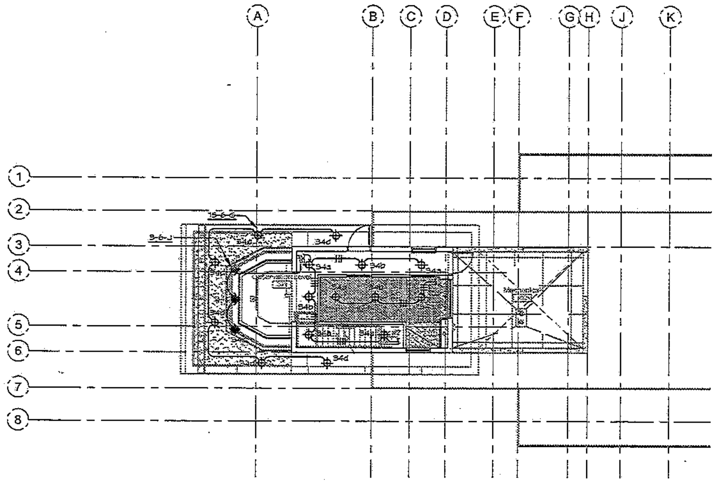

OBSERVATION LEVEL LIGHTING PLAN

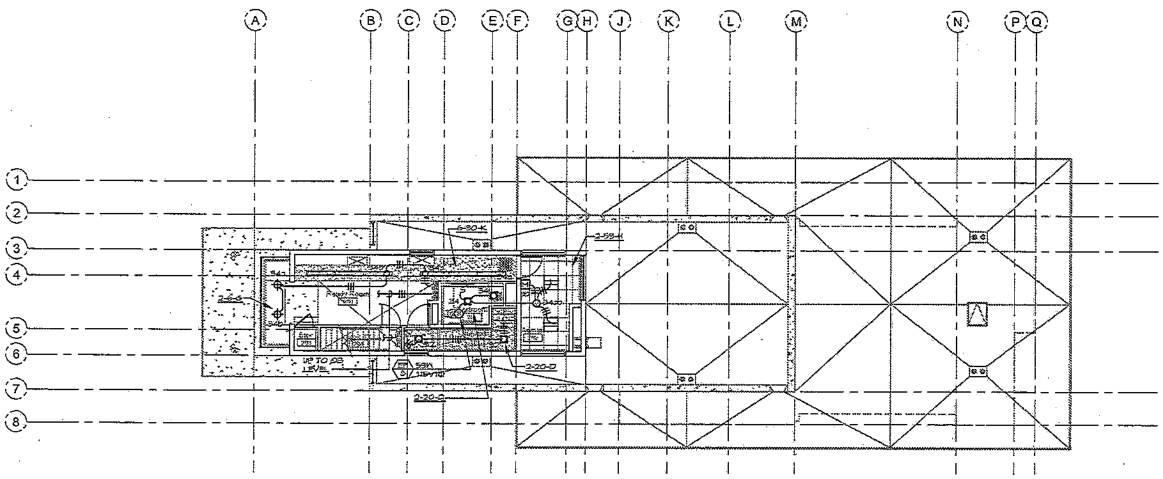

SECOND FLOOR LIGHTING PLAN

1/8" = 1'-0"

GENERAL NOTES

1. FIXTURE MOUNTED IN CONCRETE CEILING SHALL BE BLOCKED OUT DURING CONSTRUCTION. CORING AFTER POUR IS UNACCEPTABLE
2. ALL CONDUITS SHALL BE CONCEALED

E-10

PLANS FOR THE CONSTRUCTION OF

South Mission Beach Lifeguard Station

2nd & Obs. Floor Lighting Plans | E3.1

CITY OF SAN DIEGO, CALIFORNIA
ENGINEERING & CAPITAL PROJECTS
ARCHITECTURAL ENGINEERING & CONTRACTS DIVISION
SHEET 92 OF 94 SHEETS

WBS S-00791

FOR CITY ENGINEER — DATE 10/13/2014

SUBMITTED BY: JIHAD SLEMAN, PROJECT MANAGER

YOUSIF BENYAMIN, PROJECT ENGINEER

DESCRIPTION	BY	APPROVED	DATE	FILMED
ORIGINAL	KNK			

218-1693 CCS27 COORDINATES

1858-6253 CCS83 COORDINATES

CONTRACTOR ______ DATE STARTED ______
INSPECTOR ______ DATE COMPLETED ______

32849-92-D

CERTIFICATE OF COMPLIANCE (Part 1 of 4) LTG-1C

Project Name	Date
South Mission Beach Lifeguard Station	10/8/2014

Project Address	Climate Zone	Total Cond. Floor Area	Unconditioned Floor Area
San Diego	7	2,846	1,096

GENERAL INFORMATION

- Building Type: ☒ Nonresidential ☐ High-Rise Residential ☐ Hotel/Motel Guest Room ☐ School ☐ Relocatable Public School ☒ Conditioned Spaces ☒ Unconditioned Spaces
- Phase of Construction: ☒ New Construction ☐ Addition ☐ Alteration
- Method of Compliance: ☐ Complete Building ☒ Area Category ☐ Tailored

Documentation Author's Declaration Statement

I certify that this Certificate of Compliance documentation is accurate and complete.

Name: Keith Kruse	Signature: [signature]
Company: Kruse & Associates	Date: 10/8/2014
Address: 12240 World Trade Dr. Suite A	CEA # / CEPE #
City/State/Zip: San Diego, California 92128	Phone: 858.673.9776

The Principal Lighting Designer's Declaration Statement

- I am eligible under Division 3 of the California Business and Professional Code to accept responsibility for the lighting design.
- This Certificate of Compliance identifies the lighting features and performance specifications required for compliance with Title 24, Pages 1 and 6 of the California Code of Regulations.
- The design features represented on this Certificate of Compliance are consistent with the information provided to document this design on the other applicable compliance forms, worksheets, calculations, plans and specifications submitted to the enforcement agency for approval with this building permit application.

Name: Gerry Green	Signature: [signature]
Company: Kruse & Associates	Phone: (858) 673-9776
Address: 12240 World Trade Dr	License #: 15691
City/State/Zip: San Diego, CA 92128	Date: 10/08/14

Lighting Mandatory Measures
Indicate location on building plans of Mandatory Measures Note Block: SHEET E4.1

LIGHTING COMPLIANCE FORMS & WORKSHEETS (check box if worksheets is included)

For detailed instructions on the use of this and all Energy Efficiency Standards compliance forms, please refer to the Nonresidential Manual published by the California Energy Commission.

☒	LTG-1C Pages 1 through 4	Certificate of Compliance. All Pages required on plans for all submittals.
☒	LTG-2C	Lighting Controls Credit Worksheet
☒	LTG-3C	Indoor Lighting Power Allowance
☐	LTG-4C Pages 1 through 4	Tailored Method Worksheet
☐	LTG-5C Pages 1 and 2	Line Voltage Track Lighting Worksheet

EnergyPro 5.1 by EnergySoft User Number: [illegible] RunCode: 2014-10-08T10:39:[illegible] ID: Page 1 of 14

CERTIFICATE OF COMPLIANCE (Part 2 of 4) LTG-1C

South Mission Beach Lifeguard Station — 10/8/2014

INDOOR LIGHTING SCHEDULE and FIELD INSPECTION ENERGY CHECKLIST

- Installation Certificate, LTG-1-INST (Retain a copy and verify form is completed and signed.) Field Inspector ☐
- Certificate of Acceptance, LTG-2A and LTG-3A (Retain a copy and verify form is complete and signed.) Field Inspector ☐

A Separate Lighting Schedule Must Be Filled Out for Conditioned and Unconditioned Spaces. Installed Lighting Power listed on this Lighting Schedule is only for:

☒ CONDITIONED SPACE ☐ UNCONDITIONED SPACE

☒ The actual indoor lighting power listed below includes all installed permanent and portable lighting systems in accordance with §146(e).

☒ Only for offices: Up to the first 0.2 watts per square foot of portable lighting shall not be required to be included in the calculation of actual indoor lighting power density in accordance with the Exception to §146(a). All portable lighting in excess of 0.2 watts per square foot is totaled below.

A: Name or Item Tag	B: Complete Luminaire Description	C	D: Watts per Luminaire	E: CEC Default From NA8	E: According to §130(d) or (e)	F: Number of Luminaires	G: Installed Watts (D x F)	H: Field Inspector Pass	H: Fail
A	(2) 4 ft Fluorescent T8 Rapid Start Elec		82.0	☒	☐	8	496	☐	☐
B	(2) 42w Compact Fluorescent Triple 4 Pin Elec		32.0	☒	☐	8	288	☐	☐
D	20w LED		20.0	☒	☐	20	400	☐	☐
E	(1) 28w Linear Fluorescent T5 Elec		36.0	☒	☐	3	93	☐	☐
G	6w LED		6.0	☒	☐	21	126	☐	☐
H	(3) 4 ft Fluorescent T8 Rapid Start Elec		92.0	☒	☐	2	185	☐	☐
J	20w LED		30.0	☒	☐	3	90	☐	☐

Installed Watts Page Total: 1,646
Building total number of pages: Installed Watts Building Total (Sum of all pages); Enter into LTG-1C Page 4 of 4: 1,646

EnergyPro 5.1 by EnergySoft Page 2 of 14

CERTIFICATE OF COMPLIANCE (Part 2 of 4) LTG-1C

South Mission Beach Lifeguard Station — 10/8/2014

INDOOR LIGHTING SCHEDULE and FIELD INSPECTION ENERGY CHECKLIST

☐ CONDITIONED SPACE ☒ UNCONDITIONED SPACE

A: Name or Item Tag	B: Complete Luminaire Description	C	D: Watts per Luminaire	E: CEC Default From NA8	E: According to §130(d) or (e)	F: Number of Luminaires	G: Installed Watts (D x F)	H: Field Inspector Pass	H: Fail
A	(2) 4 ft Fluorescent T8 Rapid Start Elec		82.0	☒	☐	12	744	☐	☐

Installed Watts Page Total: 744
Building total number of pages: Installed Watts Building Total (Sum of all pages); Enter into LTG-1C Page 4 of 4: 744

EnergyPro 5.1 by EnergySoft Page 3 of 14

CERTIFICATE OF COMPLIANCE (Part 3 of 4) LTG-1C

South Mission Beach Lifeguard Station — 10/8/2014

INDOOR LIGHTING SCHEDULE and FIELD INSPECTION ENERGY CHECKLIST

[illegible] controls for all spaces: a) area controls, b) multi-level controls, c) manual daylighting controls for daylit areas > 250 ft², automatic daylighting controls for daylit areas > 2,500 ft², d) shut-off controls, e) display lighting controls, f) tailored lighting controls – general lighting controlled separately from display, ornamental and display case lighting and g) demand responsive automatic controls for retail stores > 50,000 ft², in accordance with Section 131

MANDATORY LIGHTING CONTROLS – FIELD INSPECTION ENERGY CHECKLIST

Type/ Description	Number of Units	Location in Building	Special Features	Field Inspector Pass	Fail
SaSb		Entire Space	☐	☐	☐
Title 24 Control Panel		Entire Space	☐	☐	☐
Motion Sensor		Admin 202	☐	☐	☐

SPECIAL FEATURES INSPECTION CHECKLIST (See Page 2 of 4 of LTG-1C)

[illegible]

Field Inspector's Notes or Discrepancies:

EnergyPro 5.1 by EnergySoft Page 4 of 14

CERTIFICATE OF COMPLIANCE (Part 4 of 4) LTG-1C

South Mission Beach Lifeguard Station — 10/8/2014

CONDITIONED AND UNCONDITIONED SPACE LIGHTING MUST NOT BE COMBINED FOR COMPLIANCE

Indoor Lighting Power for Conditioned Spaces		Watts	Indoor Lighting Power for Unconditioned Spaces		Watts
Installed Lighting (from Conditioned LTG-1C, Page 2)		1,646	Installed Lighting (from Unconditioned LTG-1C, Page 2)		744
Lighting Control Credit Conditioned Spaces (from LTG-2C)	-	37	Lighting Control Credit Unconditioned Spaces (from LTG-2C)	-	0
Adjusted Installed Lighting Power	=	1,609	Adjusted Installed Lighting Power	=	744
Complies if Installed ≤ Allowed			Complies if Installed ≤ Allowed		
Allowed Lighting Power Conditioned Spaces (from LTG-3C or PERF-1)		2,754	Allowed Lighting Power Unconditioned Spaces (from LTG-3C)		909

Required Acceptance Tests

Designer:

This form is to be used by the designer and attached to the plans. Listed below is the acceptance test for the Lighting system, LTG-2A and LTG-3A. The designer is required to check the acceptance tests and list all control devices serving the building or space shall be certified as meeting the Acceptance Requirements for Code Compliance. If all the lighting system or control of a certain type requires a test, list the different lighting and the number of systems. The NA7 Section in the Appendix of the Nonresidential Reference Appendices Manual describes the test. Since this form will be part of the plans, completion of this section will allow the responsible party to budget for the scope of work appropriately. Forms can be grouped by type of Luminaire controlled.

Enforcement Agency:

Systems Acceptance. Before Occupancy Permit is granted for a newly constructed building or space or when ever new lighting [illegible]

Equipment Requiring Testing	Description	Number of Luminaires controlled	Location	LTG-2A and LTG-3A
Occ Sensor - Multi Level	(3) 4 ft Fluorescent T8 Rapid Start Elec	2	Elect	☒

EnergyPro 5.1 by EnergySoft Page 5 of 14

LIGHTING CONTROLS CREDIT WORKSHEET (Part 1 of 2) LTG-2C

South Mission Beach Lifeguard Station — 10/8/2014

POWER ADJUSTMENT FACTORS (PAF) FOR NON-DAYLIGHT CONTROLS

☒ CONDITIONED SPACES ☐ UNCONDITIONED SPACES

A: Room # Zone ID Area	B: Lighting Control Description	C: Plan Reference	D: Room Area ft²	E: Watts of Control Lighting	F: Power Adjustment Factor	G: Control Credit Watts
Elect	Occ Sensor - Multi Level	H	102	185	0.20	37

Page Total: 37

EnergyPro 5.1 by EnergySoft Page 6 of 14

INDOOR LIGHTING POWER ALLOWANCE LTG-3C

South Mission Beach Lifeguard Station — 10/8/2014

ALLOWED LIGHTING POWER (Chose One Method)

A Separate LTG-3C must be filled out for Conditioned and Unconditioned Spaces. Indoor Lighting Power Allowances listed on this page are only for:
☒ CONDITIONED SPACES ☐ UNCONDITIONED SPACES

COMPLETE BUILDING METHOD

BUILDING CATEGORY (From §146 Table 146-E)	WATTS PER (ft²)	x	COMPLETE BLDG. AREA	=	ALLOWED WATTS
TOTALS			AREA		WATTS

AREA CATEGORY METHOD

BUILDING CATEGORY (From §146 Table 146-F)	WATTS PER (ft²)	x	Area ft²	=	ALLOWED WATTS
Electrical, Mechanical Rooms	0.70		102		71
Locker/Dressing Room	0.80		722		578
Lobby, Main Entry	1.50		160		240
Medical and Clinical Care	1.20		351		400
Convention Conference/Meeting	1.40		546		764
Offices ≤ 250 sqft	1.10		146		160
Corridor/Restroom/Support	0.60		237		464
TOTALS			2,846		2,754

TAILORED METHOD

Total Allowed Watts using the Tailored Method taken from LTG-4C (Page 1 of 4) Row 3: 0

EnergyPro 5.1 by EnergySoft Page 7 of 14

E-11

SPEC. NO. 8147

KRUSE & ASSOCIATES — LIGHTING AND ELECTRICAL DESIGN

REGISTERED PROFESSIONAL ENGINEER — GERALD L. GREEN — No. E015891 — Exp. [illegible]-30-14 — ELECTRICAL — STATE OF CALIFORNIA

PLANS FOR THE CONSTRUCTION OF
South Mission Beach Lifeguard Station

Title-24 Calculations — E4.0

CITY OF SAN DIEGO, CALIFORNIA
ENGINEERING & CAPITAL PROJECTS
ARCHITECTURAL ENGINEERING & CONTRACTS DIVISION
SHEET 93 OF 94 SHEETS

WBS S-00791

APPROVED: [signature] FOR CITY ENGINEER — DATE 10/13/2014

SUBMITTED BY: JIHAD SLEIMAN, PROJECT MANAGER
YOUSIF BENYAMIN, PROJECT ENGINEER

DESCRIPTION	BY	APPROVED	DATE	FILMED
ORIGINAL	KNK			

218-1683 CCS27 COORDINATES
1858-6253 CCS83 COORDINATES

CONTRACTOR ____ DATE STARTED ____
INSPECTOR ____ DATE COMPLETED ____

32849-93-D

INDOOR LIGHTING POWER ALLOWANCE — LTG-3C

Project Name: South Mission Beach Lifeguard Station — Date: 10/8/2014

ALLOWED LIGHTING POWER (Choose One Method)

A Separate LTG-3C must be filled out for Conditioned and Unconditioned Spaces. Indoor Lighting Power Allowances listed on this page are only for:
☐ CONDITIONED SPACES ☒ UNCONDITIONED SPACES

COMPLETE BUILDING METHOD

BUILDING CATEGORY (From §146 Table 146-E)	WATTS PER (ft²)	X	COMPLETE BLDG. AREA	=	ALLOWED WATTS
		TOTALS	AREA		WATTS

AREA CATEGORY METHOD

BUILDING CATEGORY (From §146 Table 146-F)	WATTS PER (ft²)	X	Area ft²	=	ALLOWED WATTS
Auto Repair	[illegible]		[illegible]		[illegible]
Stairwell/Mechanical Room	[illegible]		[illegible]		[illegible]
		TOTALS	[illegible]		960
			AREA		WATTS

TAILORED METHOD

Total Allowed Watts using the Tailored Method (taken from LTG-4C (Page 1 of 4) Row 3): 0

LIGHTING MANDATORY MEASURES: NONRESIDENTIAL — LTG-MM

Project Name: South Mission Beach Lifeguard Station — Date: 10/8/2014

Indoor Lighting Measures:

§131(d): Shut-off Controls

1. For every floor, all interior lighting systems shall be equipped with a separate automatic control to shut off the lighting. This automatic control shall meet the requirements of Section 119 and may be an occupancy sensor, automatic time switch, or other device capable of automatically shutting off the lighting.
2. Override for Building Lighting Shut-off: The automatic building shut-off system is provided with a manual, accessible override switch in sight of the lights. The area of override is not to exceed 5,000 square feet.

- §119(h): Automatic Control Devices Certified: All automatic control devices specified are certified, all alternate equipment shall be certified and installed as directed by the manufacturer.
- §111: Fluorescent Ballast and Luminaires Certified: All fluorescent fixtures specified for the project are certified and listed in the Directory. All installed fixtures shall be certified.
- §131(a): Individual Room/Area Controls: Each room and area in this building is equipped with a separate switch or occupancy sensor device for each area with floor-to-ceiling walls.
- §131(b): Uniform Reduction for Individual Rooms: All rooms and areas greater than 100 square feet and more than 0.8 watts per square foot of lighting load shall be controlled with bi-level switching for uniform reduction of lighting within the room.
- §131(c): Daylight Area Control: All rooms with windows and skylights that are greater than 250 square feet and that allow for the effective use of daylight in the area shall have 50% of the lamps in each daylit area controlled by a separate switch; or the effective use of daylight cannot be accomplished because the windows are continuously shaded by a building on the adjacent lot. Diagram of shading during different times of the year is included on plans.
- §131(e): Display Lighting. Display lighting shall be separately switched on circuits that are 20 amps or less.

Outdoor Lighting Measures:

- §130(c)1: Mandatory lighting power determination for medium base sockets without permanently installed ballasts
- §132(a): All permanently installed luminaires with lamps rated over 100 Watts either have a lamp efficacy of at least 60 lumens per Watt or are controlled by a motion sensor.
- §132(b): All Luminaires with lamps rated greater than 175 watts in hardscape areas, including parking lots, building entrances, canopies, and all outdoor sales areas meet the Cutoff Requirements.
- §132(c)1: All permanently installed outdoor lighting meets the control requirements listed.
- §132(c): Building facades, parking lots, garages, canopies, and outdoor sales areas meet the Multi-Level Lighting Requirements listed.

CERTIFICATE OF COMPLIANCE (Part 1 of 4) — OLTG-1C

Project Name: South Mission Beach Lifeguard Station — Date: 10/8/2014
Project Address: San Diego, CA — Total Illuminated Area: 0

GENERAL INFORMATION

Phase of Construction: ☒ New Construction ☐ Addition ☐ Alteration

Documentation Author's Declaration Statement

I certify that this Certificate of Compliance documentation is accurate and complete.

Name: Keith Kruse	Signature: (signed)
Company: Kruse & Associates	Date: 10/8/2014
Address: 12245 World Trade Dr., Suite A	CEA # / CEPE #
City/State/Zip: San Diego, California 92128	Phone: 858.676.9770

Principal Lighting Designer's Declaration Statement

- I am eligible under Division 3 of the California Business and Professional Code to accept responsibility for the lighting design.
- This Certificate of Compliance identifies the lighting features and performance specifications required for compliance with Title 24, Parts 1 and 6 of the California Code of Regulations.
- The design features represented on this Certificate of Compliance are consistent with the information provided to document this design on the other applicable compliance forms, worksheets, calculations, plans and specifications submitted to the enforcement agency for approval with this building permit application.

Name: Gerald Green	Signature: (signed)
Company: Kruse & Associates	Phone: (858) 676-9770
Address: 12245 World Trade Dr.	License #: 15691
City/State/Zip: San Diego, CA 92128	Date: 10/08/14

Principal Lighting Designer's Declaration

☒ I certify that this Certificate of Compliance documentation is accurate and complete, and accounts for all outdoor lighting power, including building mounted, pole mounted, as well as all other lighting designed for the site, and that Additional Lighting Power Allowances for Specific Applications or Additional Lighting Power Allowances for Ordinance Requirements have not been counted more than one time for the same area, in accordance with Section 147 of the Standards.

Outdoor Lighting Mandatory Measures
Indicate location on building plans of Mandatory Measures Note Block: SHEET E4.2

LIGHTING COMPLIANCE FORMS & WORKSHEETS (check box if worksheets is included)

For detailed instructions on the use of this and all Energy Efficiency Standards compliance forms, please refer to the Nonresidential Manual published by the California Energy Commission.

- ☒ OLTG-1C — Certificate of Compliance. All 4 pages required on plans for all submittals.
- ☒ OLTG-2C — (Page 1 of 3) Lighting Wattage Allowance for General Hardscape, Sales Frontage, or Ornamental Lighting. Optional on plans.
- ☐ OLTG-2C — (Page 2 of 3) Lighting Wattage Allowance for Per Application or Per Area. Optional on plans.
- ☐ OLTG-2C — (Page 3 of 3) Additional Lighting Power Allowance for Ordinance Requirements. Optional on plans.

CERTIFICATE OF COMPLIANCE (Part 2 of 4) — OLTG-1C

Project Name: South Mission Beach Lifeguard Station — Date: 10/8/2014

COMPLIANCE FIXTURE / LIGHTING CONTROL SCHEDULE and FIELD INSPECTION CHECKLIST

EXEMPT LUMINAIRES

MANDATORY CONTROLS

SPECIAL FEATURES INSPECTION CHECKLIST (See Page 2 of 4 of OLTG-1C)

Filed Inspector Notes or Discrepancies:

CERTIFICATE OF COMPLIANCE (Part 3 of 4) — OLTG-1C

Project Name: South Mission Beach Lifeguard Station — Date: 10/8/2014

A. OUTDOOR LIGHTING ZONE

OUTDOOR LIGHTING ZONE: ☐ OLZ 1 ☐ OLZ 2 ☒ OLZ 3 ☐ OLZ 4

Is the Outdoor Lighting Zone: ☒ Default in accordance with §10-114, or ☐ Amended by JHA

Complete the information below if the default Outdoor Lighting Zone has been amended by the local jurisdiction having authority (JHA):

- ☐ The site is a government designated park, recreational area, wildlife preserve, or portion thereof, and has been designated as LZ2 or LZ3, in accordance with Table 10-114-A, because the site is contained within such a zone.
- ☐ The local jurisdiction having authority has officially adopted a change to the State Default Lighting Zone and has notified the Energy Commission by providing the materials required in §10-114(d) to the Executive Director.
- ☐ The adopted change is posted on the Energy Commission website.

B. ADDITIONAL LIGHTING POWER ALLOWANCE FOR ORDINANCE REQUIREMENTS

Are additional lighting power allowances for ordinance in Table 147-C used? ☐ Yes ☒ No

Complete the information below if additional lighting power allowances for ordinance requirements are used:

- ☐ The local jurisdiction having authority has officially adopted specific outdoor light levels, which are expressed as average or minimum footcandle levels, by following a public process that allowed for formal public notification, review, and comment about the proposed change.
- ☐ The local jurisdiction having authority which adopted specific outdoor light levels and has notified the Commission by providing the following materials required §10-114(f) to the Executive Director.

C. ACCEPTANCE FORMS

Required Acceptance Tests

Designer:

This form is to be used by the designer and attached to the plans. Listed below is the acceptance test for the Lighting system, OLTG-2A. The designer is required to check the acceptance tests and list all control devices serving the building or space shall be certified as meeting the Acceptance Requirements for Code Compliance. If all the lighting system or control of a certain type requires a test, list the different lighting and the number of systems. The NA7 Section in the Appendix of the Nonresidential Reference Appendices Manual describes the test. Since this form will be part of the plans, completion of this section will allow the responsible party to budget for the scope of work appropriately. Forms can be grouped by type of Luminaire controlled.

Enforcement Agency:

Systems Acceptance: Before Occupancy Permit is granted for a newly constructed building or space or when ever new lighting system ...

Equipment Requiring Testing	Description	Luminaires Controlled: Qty of Like Controls	Luminaires Controlled: Interface	OLTG-2A: Outdoor Lighting Acceptance Tests

CERTIFICATE OF COMPLIANCE (Part 4 of 4) — OLTG-1C

Project Name: South Mission Beach Lifeguard Station — Date: 10/8/2014

ALLOWED AND INSTALLED OUTDOOR LIGHTING POWER

		Lighting Wattage Power Allowance
A	Lighting power allowance for general hardscape (from OLTG-2C Page 1 of 3)	1,034
B	Specific application lighting wattage allowance per unit length (from OLTG-2C Page 1 of 3)	0
C	Specific application lighting wattage allowance for ornamental lighting (from OLTG-2C Page 1 of 3)	0
D	Specific application lighting wattage allowance per application (from OLTG-2C Page 2 of 3)	0
E	Specific application lighting wattage allowance per area (from OLTG-2C Page 2 of 3)	0
F	Specific application lighting wattage allowance for ordinance requirements (from OLTG-2C Page 3 of 3)	0
G	Total Allowed Wattage – Sum of rows A through F:	1,034
H	Total installed watts (from Compliance Fixture Schedule, (from OLTG-2C Page 1 of 3)	126
Complies if wattage in row H is less than or equal to the wattages in row G	☒ Yes	☐ No

OUTDOOR LIGHTING WORKSHEET (Part 1 of 3) — OLTG-2C

Project Name: South Mission Beach Lifeguard Station — Date: 10/8/2014

A. LIGHTING POWER ALLOWANCE FOR GENERAL HARDSCAPE

B. SPECIFIC APPLICATION LIGHTING WATTAGE ALLOWANCE PER UNIT LENGTH

C. SPECIFIC APPLICATION WATTAGE ALLOWANCE FOR ORNAMENTAL LIGHTING

NOTES

CERTIFICATE OF ACCEPTANCE (LTG-2A) AND ALL RELATED ACCEPTANCE DOCUMENTS SHALL BE SUBMITTED TO THE FILED INSPECTOR DURING CONSTRUCTION. CERTIFICATE OF OCCUPANCY WILL NOT BE ISSUED UNTIL THESE FORMS ARE REVIEWED AND APPROVED.

E-12

KRUSE & ASSOCIATES

SPEC. NO. 5147

REGISTERED PROFESSIONAL ENGINEER — GERALD L. GREEN — No. E015691 — ELECTRICAL — STATE OF CALIFORNIA

PLANS FOR THE CONSTRUCTION OF
South Mission Beach Lifeguard Station

Title-24 Calculations — E4.1

CITY OF SAN DIEGO, CALIFORNIA
ENGINEERING & CAPITAL PROJECTS
ARCHITECTURAL ENGINEERING & CONTRACTS DIVISION
SHEET 94 OF 94 SHEETS

WBS S-00791

APPROVED: (signed) FOR CITY ENGINEER — DATE: 10/13/2014

SUBMITTED BY: JIHAD SLEIMAN, PROJECT MANAGER

YOUSIF DENYAKH, PROJECT ENGINEER

DESCRIPTION	BY	APPROVED	DATE	FILMED
ORIGINAL	KNK			

216-1863 CCS27 COORDINATES
1858-6253 CCS83 COORDINATES

CONTRACTOR ____ DATE STARTED ____
INSPECTOR ____ DATE COMPLETED ____

32849-94-D

Proprietary design. These drawings and designs are protected by common law copyright. All materials ... © COPYRIGHT

City of San Diego

CITY CONTACT: Damian Singleton - Contract Specialist, Email: DSingleton@sandiego.gov
Phone No. (619) 533-3482, **Fax No**. (619) 533-3633

ADDENDUM "B"

FOR

SOUTH MISSION BEACH LIFEGUARD STATION

BID NO.: K-15-1180-DBB-3
SAP NO. (WBS/IO/CC): S-00791
CLIENT DEPARTMENT: 1912
COUNCIL DISTRICT: 2
PROJECT TYPE: BB

BID DUE DATE:

2:00 PM
NOVEMBER 25, 2014
CITY OF SAN DIEGO
PUBLIC WORKS CONTRACTS
1010 SECOND AVENUE, 14th FLOOR, MS 614C
SAN DIEGO, CA 92101

ENGINEER OF WORK

The engineering Specifications and Special Provisions contained herein have been prepared by or under the direction of the following Registered Engineer:

11.13.14

1) Registered Architect — Date — Seal:

2) For City Engineer — Date — Seal:

A. CHANGES TO CONTRACT DOCUMENTS

The following changes to the Contract Documents are hereby made effective as though originally issued with the bid package. Bidders are reminded that all previous requirements to this solicitation remain in full force and effect.

THE SUBMITTAL DATE FOR THIS PROJECT HAS BEEN **EXTENDED AS STATED ON THE COVER PAGE**.

B. BIDDER's QUESTIONS

Q1. Please clarify how the curtain wall horizontal is supported at the butt joints. There are no vertical shown to support the horizontal at the joints like there are at the jambs. See detail #1/A3.1 and 19/A5.3 for a reference. Old castle as specified in 08 41 00 does not make a 12 degree angled mullion. Please clarify how to achieve the 12 degree shown.

A1. The curtain wall corners are clear sealant, miter-joint conditions per detail 19/A5.3. The horizontal mullions are supported by sloped vertical members per detail 5/A5.3. (Also see sheet A6.1 for window type P1, P2, & Q). In addition, the Specification Section 08 41 00 Aluminum Storefront System calls for the supplier to design/provide additional internal structural support as required for the complete system.

Q2. Door 114C is shown to be 60 Minute Rated in the Hardware Specifications. It is not shown as being Rated on the Door Schedule which I believe is correct?

A2. Door 114C is not rated.

Q3. I believe that during our meeting, you stated there will be no electric access hardware. Is this correct?

A3. Electric access controls to be provided per specifications.

Q4. Doors 102C & 114B are listed as Type A doors and the Door Schedule calls for Glazing which I believe is in error. Please Clarify?

A4. Doors 102C and 114B do not have glass.

Q5. The elevations on the Door Types show "Louvers per Schedule" but I am unable to find a schedule with this information. Perhaps my plans are not complete or the latest. Please advise where I may access this information.

A5. Doors 101A and 109A have 12"x12" typical door grilles per mechanical plans.

Q6. Spec section 10 01 01 2.1.7 calls for Perforated Lattice Patterned Grills for Cabinetry. The elevation for cabinets does not show any lattice. Some cabinets have louvers but no lattice. Please clarify where this product is located. Please clarify the thickness and material for these grills.

A6. The specification section 10 01 01 2.1.7 that calls for Perforated Lattice Patterned Grills for Cabinetry is correct. Keynote #53 of interior elevation 3c/A4.1 and detail 7/A5.4 shall reference the perforated grills of the specifications. The perforated grills are aluminum (black anodized finish) with a thickness of 1/8". Spec section 10 01 01 (2.1.7) calls out the size (*36" H x 12" W).* It shall read "*custom size grilles per cabinetry manufacturer's shop drawings*". See Item 1 in Part D. Volume 1 below.

Q7. Was it stated at the Pre-bid meeting Tuesday that the Contractors had to self-perform 50% of the work? Does Section 1 - Terms, Definitions Item 2-3.2.2 (attached) waive that requirement? Please review to clarify.

A7. The self performance percentage requirement will be waived for contracts when a "B" License is required or allowed.

Q8. There is a sunshade shown on detail 1 & 2 /A3.1. Detail 10 & 15 / A5.6 just calls for an extension sunshade. There are no references in the spec for a sunshade. Please provide information on manufacturer, model, size, etc.

A8. The reference sunshade extension is not a manufactured product. It is considered a sheet metal / roofing detail.

Q9. Noted on drawing A1.1 is Black Slate Veneer on the free standing concrete wall. Please clarify if the Black Slate Veneer is covering the entire concrete wall. Also please clarify the finish specifications for the Black Slate Veneer.

A9. The black slate veneer shall be applied to all sides of the free standing wall. The finish shall be smooth solid slate slabs per 09 06 00.

Q10. The specification calls out for a 30 yr warranty. The Roof system is not a 30 yr assembly system.

A10. To provide the 30 year warranty requirement, revise Specification Division 07 54 00 – Adhered PVC Membrane Roofing. See Item 2 in Part D. Volume 1 below.

Q11. Sheet A6.2 all assembly, W1 calls for light sandblast finish. Note on plans #1 calls for a smooth texture, finish schedule has sealed finish. Which shall it be? Also, is it your intent to have a heavy sandblast finish on the W2, CMU walls?

A11. Concrete and masonry walls shall be per specifications section S 03 30 00, 04 22 00, and 09 06 00.

Q12. Please clarify the support hardware for the 3-Form mounted red cross.

A12. Provide the Manufacturers XT Point Support Hardware at each connection to the 3x3x1/4" stainless steel angle as shown on Details 7,10/A5.2.

C. CLARIFICATIONS

1. Lifeguard services currently has three storage containers (30' x 15' each) and four seasonal towers within the limit of work areas. Access to these containers and towers will be required. It is the contractor's responsibility to provide Lifeguard services access to these areas.

2. The Plans are being replaced due to the quality and formatting of the drawings. The scope of work **HAS NOT** changed.

D. ADDENDUM

1. To Addendum A, Item E, "Plans," **DELETE** in their entirety.

E. VOLUME 1

1. To Attachment E, Supplementary Special Provisions, pages 214 through 232, Technicals, Section 07 54 00 – Adhered PVC Membrane Roofing, **DELETE** in its entirety and **SUBSTITUTE** with pages 6 through 25 of this Addendum.

2. To Attachment E, Supplementary Special Provisions, page 352, Technicals, Section 10 01 01 – Miscellaneous Specialties, Part 2 - Products, Sub-section 2.1.7 Perforated Lattice Pattern Grilles, **DELETE** in its entirety and **SUBSTITUTE** with the following:

   2.1.7 Perforated Lattice Patterned Grilles for Cabinetry: Air Flex Industries, Inc. (631-752-1234) Pattern: Number 1011, or approved equal. Material to be 1/8" thick custom size grilles per cabinetry manufacturer's shop drawings with 1" margin all sides typical. Pattern repeat ¼" with ¼" bar, open area 25%. Black anodized finish, mount with matching flat head screws.

F. PLANS

1. To Drawings numbered 32849-01-D through 32849-94-D, **DELETE** in their entirety and **REPLACE** with Addendum B with revised Drawings numbered 32849-01-D through 32849-94-D uploaded at the City's online bidding service.

James Nagelvoort, Director
Public Works Department

Dated: *November 17, 2014*
San Diego, California

JN/BD/Lad

SECTION 07 54 00 - ADHERED PVC MEMBRANE ROOFING

PART 1 - GENERAL CONDITIONS

1.01 DESCRIPTION

A. Scope

1. The extent of the PVC roofing system work is defined to include roofing, flashing, and roofing accessories integrally related to roofing installation.

2. Contractor shall coordinate with all other trades that directly influence the roof system application to provide a watertight installation of all roof membrane and roof flashings.

3. Contractor shall verify condition of substrate, curbs, penetrations, flashings, equipment supports, etc. and shall notify the owner of any discrepancies in the scope of work prior to commencement of roofing.

B. System Description-Upper roof Location

1. Over the new plywood deck, the contractor is to install a single layer of a 10 mil polyethylene air barrier. The air barrier is to be loose-laid over the deck with all edges over-lapping 4 inches and all joints sealed with butyl tape. The air barrier is to be extended and sealed to the perimeter of the building as well as all deck penetrations to provide continuity of the building's air envelope. All roof penetrations must be sealed on the vertical surface utilizing butyl tape.

2. Over the properly installed air barrier, provide all accessories to install polyisocyanurate cricket insulation. The crickets are to be mechanically fastened using manufacturer approved fasteners and plates and in accordance with this specification and drawings.

3. Over the mechanically fastened crickets, install a factory primed ½" fiberglass reinforced protection board. The protection board is to be mechanically fastened in accordance with the manufacturer's written instructions and with manufacturer approved fasteners and plates.

4. Over the factory primed ½" protection board, install a new fully adhered 80 mil PVC membrane. The color of the membrane is to be Energy Smart White. The new roof system shall be installed in accordance with this specification and details.

5. All parapet walls are to be fully adhered utilizing manufacturer approved adhesives and flashing membrane thickness of 60 mils.

6. Provide an allowance in base bid to install PVC walk tread as required by the Owner/Owner's Representative.

7. All clad metal used is to be stainless steel.

C. System Description-Lower and Midlevel Roof Location

1. Over the new concrete deck, the contractor is to provide all accessories to install self-adhered vapor barrier, and full tapered polyisocyanurate insulation system adhered using manufacturer approved low rise foam adhesive and in accordance with the manufacturer's specifications. Average insulation R Value shall equal R-19.

2. Over the new tapered polyisocyanurate insulation system, install a factory primed ½" fiberglass reinforced protection board. The protection board is to be fully adhered in accordance with the manufacturer's written instructions and with manufacturer approved low rise foam adhesive.

3. Over the factory primed ½" fiberglass reinforced protection board, install a fully adhered 80 mil PVC membrane. The color of the membrane is to be Energy Smart White. The new roof system shall be installed in accordance with this specification and details.

4. All parapet walls are to be fully adhered utilizing manufacturer approved adhesives and flashing membrane matching the thickness of the field membrane.

5. Provide an allowance in base bid to install PVC walk tread as required by the Owner/Owner's Representative.

6. All clad metal used is to be stainless steel.

D. Upon successful completion of work the following warranties may be obtained:

1. Membrane Manufacturer 30 year System Warranty
2. Applicator 5 year Warranty

1.02 QUALITY ASSURANCE

A. This system shall be applied only by a Roofing Contractor authorized by the membrane manufacturer. ("Approved Applicator").

B. Third Party Inspections:

An authorized/licensed independent inspector, hired by the subcontractor/general contractor shall be present at all times during the installation of the PVC roofing system work. Prior to and during the installation of the PVC roofing system, he will inspect and approve (if satisfactory) required items per the manufacturer's recommendations. Work shall not proceed until inspections are complete and the inspected work is approved.

Upon completion of the installation and the delivery to the membrane manufacturer by the Applicator of a certification that all work has been done in strict accordance with the contract specifications and the membrane manufacturer's requirements, an inspection shall be made by the inspector, a Technical Representative of the manufacturer, Resident Engineer, Architect, and Owner's representative, to review the installed roof system.

C. There shall be no deviation made from the Project Specification or the approved shop drawings without prior written approval by the Owner, the Owner's Representative and the membrane manufacturer.

D. All work pertaining to the installation of specified membrane and flashings shall only be completed by Applicator personnel trained and authorized by the membrane manufacturer in those procedures.

E. Membrane to have no formulation changes in the last (15) years as certified by the manufacturer.

F. Manufacturer's warranty shall have "No Dollar Limit" for the replacement of defective materials and/or labor and shall not containany exclusion for ponding water.

G. Membrane manufacturer shall submit; third-party test data documenting the proposed equal has a membrane "polymer thickness" to be certified to the specified thickness, ASTM (+/-) mil tolerances are not acceptable.

H. Membrane shall have a minimum of twenty-two (22) mils of waterproofing polymers above the reinforcements as documented by a third party source.

I. Membrane manufacturer to confirm in writing that they directly manufacture the roofing membrane (private labeled membranes are not acceptable).

J. Provide PRE-CONSTRUCTION CONFERENCE per 3.01.

K. Prior to demobilization from the site, the work shall be reviewed per 1.02 Item B above. Provide POST-CONSTRUCTION CONFERENCE per 3.11**.**

1.03 SUBMITTALS

A. Submittals of Specified Material

At the time of award, the Applicator shall submit to six (6) copies of the following:

1. Samples of each primary component to be used in the roof system and the manufacturer's current literature for each component.

2. Sample copy of Manufacturer's 30 year System Warranty.

3. Sample copy of Applicator's 5 year Workmanship Warranty.

4. Certifications Letter from proposed Roofing Manufacturer indicating the actual polymer thickness of the product supplied for this project is 80 mils. Polymer thickness variance shall not exceed ± 0.001 inch.

5. Certification from the Applicator that the system specified meets all identified code and insurance requirements as required by the Specification.

6. Material Safety Data Sheets (MSDS)

B. Submittals of Equals

Submit proposed equals to be considered for use on this project no less than ten (10) days prior to bid date. Proposed roof systems which have been reviewed and accepted will be listed in an addendum prior to bid date; only then will roof systems be accepted at bidding.

Submittals shall include the following:

1. Copies of Specification.

2. Samples of each primary component to be used in the roof system and the manufacturer's current literature for each component.

3. Sample copy of Manufacturer's warranty, must meet all requirements as outlined in Quality Assurance 1.02-F and Warranty 1.08-A.

4. Sample copy of Applicator's warranty.

5. Submit documentation that materials and system meet the standards as set forth by Quality Assurance 1.02A through J.

6. Certifications by manufacturers of roofing and insulating materials that all materials supplied comply with all requirements of the identified ASTM and industry standards or practices and requirements of this specification including warranty requirements.

7. Certification from the Applicator that the system specified meets all identified code and insurance requirements as required by the Specification.

8. Letter from the proposed manufacturer confirming the number of years it has DIRECTLY manufactured the proposed roof system under the trade names and/or trademarks as proposed.

9. Material Safety Data Sheets (MSDS).

10. Copies of all Code Ratings as described in Section 1.04.

1.04 CODE REQUIREMENTS

The applicator shall submit evidence that the proposed roof system meets the requirements of the local building code and has been tested and approved or listed by the following test organizations. These requirements are minimum standards and no roofing work shall commence without written documentation of the system's compliance, as required in the "Submittals" section of this specification.

A. Factory Mutual Research Corporation (FM) - Norwood, MA

1. Class 1-90

B. Underwriters Laboratories, Inc. - Northbrook, IL

1. Class A assembly

1.05 PRODUCT DELIVERY, STORAGE AND HANDLING

A. All products delivered to the job site shall be in the original unopened containers or wrappings bearing all seals and approvals.

B. Handle all materials to prevent damage. Place all materials on pallets and fully protect from moisture.

C. Membrane rolls shall be stored lying down on pallets and fully protected from the weather with clean canvas tarpaulins. Unvented polyethylene tarpaulins are not accepted due to the accumulation of moisture beneath the tarpaulin in certain weather conditions that may affect the ease of membrane weldability.

D. As a general rule all adhesives shall be stored at temperatures between 40º F and 80º F. Read instructions contained on adhesive canister for specific storage instructions.

E. All flammable materials shall be stored in a cool, dry area away from sparks and open flames. Follow precautions outlined on containers or supplied by material manufacturer/supplier.

1.06 JOB CONDITIONS

A. Roofing materials may be installed under certain adverse weather conditions but only after consultation with the manufacturer, as installation time and system integrity may be affected.

B. Only as much of the new roofing as can be made weathertight each day, including all flashing and detail work, shall be installed. All seams shall be heat welded before leaving the job site that day.

C. All surfaces to receive new membrane or flashings shall be dry. Should surface moisture occur, the Applicator shall provide the necessary equipment to dry the surface prior to application.

D. All new and temporary construction, including equipment and accessories, shall be secured in such a manner as to preclude wind blow-off and subsequent roof or equipment damage.

E. Uninterrupted waterstops shall be installed at the end of each day's work and shall be completely removed before proceeding with the next day's work. Waterstops shall not emit dangerous or unsafe fumes and shall not remain in contact with the finished roof as the installation progresses. Contaminated membrane shall be replaced at no cost to the Owner.

F. The Applicator is cautioned that certain roofing membranes are incompatible with asphalt, coal tar, heavy oils, roofing cements, creosote and some preservative materials. Such materials shall not remain in contact with PVC membranes. The Applicator shall consult the membrane manufacturer regarding compatibility, precautions and recommendations.

G. Arrange work sequence to avoid use of newly constructed roofing as a walking surface or for equipment movement and storage. Where such access is absolutely required, the contractor requiring access shall provide all necessary protection and barriers to segregate the work area and to prevent damage to adjacent areas. A substantial protection layer consisting of plywood over 9 oz. felt or plywood over insulation board shall be provided for all new and existing roof areas that receive rooftop traffic during construction.

H. Prior to and during application, all dirt, debris and dust shall be removed from surfaces by vacuuming, sweeping, blowing with compressed air and/or similar methods.

I. The Applicator shall follow all safety regulations as required by OSHA and any other applicable authority having jurisdiction.

J. All new roofing waste material (i.e., scrap roof membrane, empty cans of adhesive) shall be immediately removed from the site by the Applicator and properly transported to a legal dumping area authorized to receive such material.

K. The Applicator shall take precautions that storage and/or application of materials and/or equipment does not overload the roof deck or building structure.

L. Flammable adhesives and deck primers shall not be stored and not be used in the vicinity of open flames, sparks and excessive heat.

M. All rooftop contamination that is anticipated or that is occurring shall be reported to the membrane manufacturer to determine the corrective steps to be taken.

N. The Applicator shall verify that all roof drain lines are functioning correctly (not clogged or blocked) before starting work. Applicator shall report any such blockages in writing

(letter copy to the membrane manufacturer) to the Owner's Representative for corrective action prior to the installation of the PVC roof system.

O. Site cleanup, including both interior and exterior building areas that have been affected by construction, shall be completed to the Owner's satisfaction.

P. The PVC membrane shall not be installed under the following conditions without consulting the membrane manufacturer's Technical Department for precautionary steps:

1. The roof assembly permits interior air to pressurize the membrane underside.
2. Any exterior wall has 10% or more of the surface area comprised of opening doors or windows.
3. The wall/deck intersection permits air entry into the wall flashing area.

Q. Protective wear shall be worn when using solvents or adhesives or as required by job conditions.

R. PVC membranes are slippery when wet or covered with snow, frost, or ice. Working on surfaces under these conditions is hazardous. Appropriate safety measures must be implemented prior to working on such surfaces. Always follow OSHA and other relevant fall protection standards when working on roofs.

1.07 BIDDING REQUIREMENTS

A. Pre-Bid:

1. Provide any questions to the drawings and specifications at least 10 days prior to bid.

1.08 WARRANTIES

A. Membrane Manufacturer's 30 Year System Warranty

1. Upon successful completion of the work to the membrane manufacturer's satisfaction and receipt of final payment, the 30 Year System Warranty shall be issued. The warranty shall have "No Dollar Limit" for the replacement of defective materials and/or labor and shall not contain any exclusion for ponding water for any length of time.

B. Applicator 5 Year Warranty

1. The Applicator shall supply the Owner with a separate 5 year workmanship warranty. In the event any work related to roofing, flashing, or metal is found to be within the Applicator warranty term, defective or otherwise not in accordance with the Contract Documents, the Applicator shall repair that defect at no cost to the Owner. The Applicator's warranty obligation shall run directly to the Owner, and a copy shall be sent to the membrane manufacturer.

C. Owner Responsibility

1. Owner shall notify both the membrane manufacturer and the Applicator of any leaks as they occur during the time period when both warranties are in effect.

PART 2 - PRODUCTS

2.01 GENERAL

A. The basis of design for the roof system is Sika Sarnafil or equal. Equals must comply with Quality Assurance section 1.02 and Submittal section 1.03B.

2.02 MEMBRANE

A. Sarnafil®80 mil G410 fiberglass reinforced membrane with a lacquer coating. Other manufacturers offering acceptable products include the following:

1. FiberTite
2. Tremco TPA

B. Membrane shall conform to ASTM D4434 &D6754 (latest version), "Standard for Polyvinyl Chloride Sheet Roofing". Classification: Type II & III, Grade I.

1. Sarnafil G410, 80 mil minimum, thermoplastic membrane with fiberglass mat reinforcement.

C. Certified Polymer Thickness

1. ASTM +/- tolerance for membrane thickness is not accepted.

D. Color of Membrane

1. Energy Smart White, initial reflectivity of 0.83, initial emissivity 0.90, solar reflective index (SRI) of 104.

2.03 FLASHING MATERIALS

A. Wall/Curb Flashing

1. G410 Flashing Membrane

   A 60 mil fiberglass reinforced membrane available in Light Gray adhered to approved substrate using VOC compliant adhesive.

2. Sarnaclad – Stainless Steel

   A PVC coated, heat weldable sheet metal capable of being formed into a variety of

shapes and profiles. Sarnaclad is a stainless steel sheet metal with an unsupported Sarnafil membrane laminated on one side.

B. Miscellaneous Flashing

1. Reglet Termination Bar

A heavy-duty, extruded aluminum flashing termination reglet used at walls and large curbs. Reglet termination bar is produced from 6063-T5, 0.10 inch - 0.12 inch thick extruded aluminum. The Reglet has a 2¼ inch deep profile, and is provided in 10 foot lengths. Use prefabricated reglet mitered inside and outside corners where walls intersect.

2. Multi-Purpose Sealant

A proprietary sealant used at flashing terminations. Consult Product Data Sheet for additional information.

3. VOC Compliant Solvent Based Adhesive

A VOC compliant adhesive used to attach membrane to flashing substrate.

2.04 DECK PRIMERS

A. Sarnavap Self-Adhered Primer WB

A water-based primer designed for use with Sarnavap Self-Adhered vapor barrier to promote adhesion to most substrates. Particularly recommended when use of solvent-based primer is not advised or permitted. Consult Product Data Sheet for additional information.

2.05 VAPOR BARRIERS

A. Sarnavap-10

A 10 mil thick polyethylene vapor barrier/air barrier. Air/Vapor Barrier is supplied in a folded panel that is rolled onto a core. The core width is 5 feet. When unrolled off the core and unfolded, the sheet dimensions are 20 feet wide by 100 feet long. Consult Product Data Sheet for additional information.

B. Sarnavap Self-Adhered

A 32 mil self-adhesive vapor barrier that can also serve as temporary roof protection. Sarnavap Self-Adhered is available in rolls 44.9 inches x 133.8 feet. Consult Product Data Sheet for additional information.

2.06 INSULATION BOARD

A. Tapered Polyisocyanurate Insulation

A rigid isocyanurate foam insulation with glass mat facers. Tapered Polyisocyanurate insulation is available in 4 x 4 ft and 4 x 8ft sizes and in a various thicknesses. Consult Product Data Sheet for additional information.

2.07 PROTECTION BOARD

A. Dens Deck Prime

A siliconized gypsum, fire-tested hardboard with glass-mat facers and factory applied primer. Dens Deck Prime is provided in a 4 x 8 ft board size and in a thickness of½ inch.

2.08 ATTACHMENT COMPONENTS

A. Protection Board / Insulation plate: Used with the #12 fasteners to attach protection and insulation boards to roof deck. The cover board plate is a 3 inch square 26 gauge stamping of SAE 1010 steel with an AZ 55 Galvalume coating.

B. Protection Board / Insulation fastener: A #12 corrosion-resistant fastener used with plates to attach protection and insulation boards to steel or wood roof decks. The #12 fastener has a modified buttress thread, a shank diameter of approximately 0.168 inch and a thread diameter of approximately 0.214 inch. The driving head has a diameter of approximately 0.435 inch with a #3 Phillips recess for positive engagement.

C. Water Based Membrane Adhesive:

A water-based adhesive used to attach the membrane to horizontal or near-horizontal substrates.

Notes:

1. There is a significant increase in drying time due to an increase in humidity and/or a decrease in temperature. Do not install when outdoor or substrate temperatures during drying period are expected to fall below 40º F.
2. Do not allow water based membrane adhesive to skin-over or surface-dry prior to installation of membrane.
3. Use a water-filled, foam-covered lawn roller to consistently and evenly press the membrane into the adhesive layer.

D. Insulation and Protection board adhesive: A low odor, VOC compliant, one step, low-rise urethane foam used to attach insulation and protection board to approved compatible substrates. Adhesive is applied with a gravity fed applicator or by hand with a dual component caulk gun. Additional adhesive may be required for rougher surfaces. Consult

Product Data Sheets for additional information. Application rate is as follows:

1. Coverage - Approximately 550 square feet per case. Rates are based on an application pattern of 4 ribbons, 1/4 to 1/2 inch beads, 12 inches on center per 4 x 4 feet board. Coverage rates may vary over irregular surfaces

E. Membrane Termination Bar: An extruded aluminum, low profile bar used with certain fasteners to attach to the roof deck or to walls/curbs at terminations, penetrations and at incline changes of the substrate. Peel stop is a 1 inch wide, flat aluminum bar 1/8 inch thick that has predrilled holes every 6 inches on center.

2.09 WALKWAY PROTECTION

A. Walk Tread: A polyester reinforced, 0.096 inch, weldable membrane with surface embossment. Used as a protection layer from rooftop traffic. Walk tread is supplied in rolls of 3.25feet wide and 50 feet long.

2.10 MISCELLANEOUS ACCESSORIES

A. Aluminum Tape: A 2 inch wide pressure-sensitive aluminum tape used as a separation layer between small areas of asphalt contamination and the membrane and as a bond-breaker under the coverstrip at the PVC Clad joints.

B. PVC Cleaner: A high quality solvent cleaner used for the general cleaning of residual asphalt, scuff marks, etc., from the membrane surface. PVC Cleaner is also used daily to clean seam areas prior to hot-air welding in tear off or dirty conditions or if the membrane is not welded the same day it is unrolled.

C. Multi-Purpose Butyl Tape: A high performance sealant tape used with metal flashings as a preventive measure against air and windblown moisture entry. Also used as sealant tape for the air/vapor barrier.

2.11 SEALANTS

A. Multi-Purpose Sealant (for termination details).

B. Two Part urethane sealant.

C. Depending on substrates, the following sealants are options for temporary overnight tie-ins:

1. Two Part urethane sealant.
2. Multiple layers of roofing cement and felt.
3. Spray-applied, water-resistant urethane foam.
4. Mechanical attachment with rigid bars and compressed sealant.

2.12 MISCELLANEOUS FASTENERS AND ANCHORS

A. All fasteners, anchors, nails, straps, bars, etc. shall be post-galvanized steel, aluminum or stainless steel. Mixing metal types and methods of contact shall be assembled in such a manner as to avoid galvanic corrosion. Fasteners for attachment of metal to masonry shall be expansion type fasteners with stainless steel pins. All concrete fasteners and anchors shall have a minimum embedment of 1¼ inch and shall be approved for such use by the fastener manufacturer. All miscellaneous wood fasteners and anchors used for flashings shall have a minimum embedment of 1 inch and shall be approved for such use by the fastener manufacturer.

PART 3- EXECUTION

3.01 PRE-CONSTRUCTION CONFERENCE

A. The Applicator, Owner's Representative and Manufacturer shall attend a pre-construction conference.

B. The meeting shall discuss all aspects of the project including but not limited to:

1. Safety
2. Set up
3. Construction schedule
4. Contract conditions
5. Coordination of the work

3.02 SUBSTRATE PREPARATION

The roof deck and existing roof construction must be structurally sound to provide support for the new roof system. The Applicator shall load materials on the rooftop in such a manner as to eliminate risk of deck overload due to concentrated weight. The Owner's Representative shall ensure that the roof deck is secured to the structural framing according to local building code and in such a manner as to resist all anticipated wind loads in that location.

A. New Construction

1. Poured Concrete Deck

The roof deck shall be installed and cured in accordance with industry standards. The surface shall have a smooth and level finish and shall be free of dust, excess moisture, oil-based curing agents and loose debris. Sharp ridges or other projections above the surface shall be removed before roofing.

2. Wood Deck:

   a) FM Approved Wood Deck - All rotted or deteriorated wood shall be removed and replaced. The deck thickness shall be 2 inch minimum lumber or ¾ inch plywood. The deck shall conform to FM's requirements for Class 1 wood decks. Deck attachment shall conform to FM and local code requirements. Fastener heads shall be recessed into the wood surface.

   b) Non-FM Approved Wood Deck - All rotted or deteriorated wood shall be removed and replaced. The deck thickness shall be 1-1/2 inch lumber or 15/32 plywood or match existing deck if greater. Deck type and attachment shall conform to local code requirements. Fastener heads shall be recessed into the wood surface.

3.03 SUBSTRATE INSPECTION

A. A dry, clean and smooth substrate shall be prepared to receive the PVC roof system.

B. The Applicator shall inspect the substrate for defects such as excessive surface roughness, contamination, structural inadequacy, or any other condition that will adversely affect the quality of work.

C. The substrate shall be clean, smooth, dry, free of flaws, sharp edges, loose and foreign material, oil and grease. Roofing shall not start until all defects have been corrected.

D. All roof surfaces shall be free of moisture.

E. Roofing membrane shall be applied over compatible and accepted substrates only.

3.04 VAPOR / AIR BARRIER

General Criteria:

Interior (inside temperature/relative humidity) and exterior conditions may create a need for a vapor barrier. The design professional shall decide whether a vapor barrier is necessary. It is the design professional's responsibility to determine the type and location of a vapor barrier. If sealed properly, a vapor barrier can also act as an air barrier (positive pressure) for roofs intended over air-permeable decks (steel, wood, precast, etc.). When reroofing over the existing asphalt roof, the old roof may be considered to be an adequate vapor barrier/air barrier if the details are properly sealed.

A. Sarnavap-10

1. Wood Deck - Upper Deck:

   Sarnavap-10 is loose-laid over suitable substrate. Overlap all edges 4 inches and seal with butyl tape. Extend Sarnavap-10 to perimeter and deck penetrations and seal to

provide continuity of the building's air/vapor envelope. Sarnavap-10 must be sealed on the vertical surface at roof penetrations also.

2. Primer Application

   The substrate must be clean, dry and free of dust, grease or other contaminants. Shake well before using. Apply to clean and dry surfaces with a paint brush, roller or sprayer. Application rates will vary depending on substrate. Sarnavap Self-Adhered vapor barrier must be installed on the same day as the primer application. Acceptable substrates for primer application include concrete, lightweight concrete, and gypsum boards. Drying time is typically 30 minutes to 3 hours.

3. Membrane Application Over Concrete Deck - Lower Decks:

   Install Sarnavap Self-Adhered over a clean and dry substrate. In concrete deck applications concrete must be fully dry. Do not install when it is raining, snowing, or on wet/humid surfaces. Install in temperatures 14°F and above. The use of a primer is required on the following substrates: wood, concrete, lightweight concrete, gypsum boards and decks.

   a) Begin application at the bottom of the slope. Unroll Sarnavap Self-Adhered onto the substrate without adhering for alignment. Overlap each preceding sheet by 3inches lengthwise following the reference line and by 6 inches at each end. Stagger end laps by at least 12 inches. Do not immediately remove the silicone release sheet.

   b) Once aligned, peel back a portion of the silicone release sheet and press the membrane onto the substrate for initial adherence. Hold Sarnavap Self-Adhered tight and peel back the release sheet by pulling diagonally.

Use a minimum 100 lb steel, membrane roller, by rolling in two directions to press Sarnavap Self-Adhered down into the substrate including the laps. Finish by aligning the edge of the roller with the lower end of the side laps and rolling up the membrane. Do not cut the membrane to remove air bubbles trapped under the laps. Squeeze out air bubbles by pushing the roller to the edge of the laps.

3.05 PROTECTION AND INSULATION BOARD INSTALLATION

A. Protection and insulation board shall be installed according to manufacturer's instructions.

B. Protection and insulation board shall be neatly cut to fit around penetrations and projections.

C. Do not install more protection and insulation board than can be covered with membrane by the end of the day or the onset of inclement weather.

D. Mechanical Attachment

1. Insulation shall be mechanically fastened to the deck with approved fasteners and plates at a rate according to the insulation manufacturer's and Sika Sarnafil's recommendations for fastening rates and patterns. The quantity and locations of the fasteners and plates shall also cause the insulation boards to rest evenly on the roof deck/substrate so that there are no significant and avoidable air spaces between the boards and the substrate. Each insulation board shall be installed tightly against the adjacent boards on all sides.

2. Fasteners are to be installed consistently in accordance with fastener manufacturer's recommendations. Fasteners are to have minimum penetration into structural deck recommended by the fastener manufacturer and Sika Sarnafil.

3. Use fastener tools with a depth locator and torque-limiting attachment as recommended or supplied by fastener manufacturer to ensure proper installation

E. Adhered Attachment

1. With a utility knife, cut away the plastic plugs from the two component low rise foam cartridge mixing head. Attach a mixing tip to the threaded mixing head. Place the cartridge into the applicator. At the beginning of the tube, some of the material should be pumped out initially to make sure of a proper mix. Apply using a gravity fed applicator or by hand with a dual component caulk gun over properly installed and prepared substrates in bands 12 in. o.c. Bands are 1/4-1/2 in. wide before foaming. Adhesive will quickly, within 30-45 seconds at 60-80°F, transform from a liquid into a low rise foam. Immediately set protection/insulation boards into wet adhesive. Do not allow the adhesive to skin over. Walk protection/insulation boards into place to ensure full embedment. Within 5-15 minutes the boards are securely attached to the substrate. In warmer weather this process is a little quicker. In colder weather the process is a little slower. CAUTION: Walking protection/insulation boards in immediately after placement into adhesive may cause slippage/movement until adhesive starts to set up. On roof slopes greater than 1/2 inch in 12 inches, begin adhering protection/insulation boards at low point and work upward to avoid slippage. One person should be designated to walk in, trim/slit and apply weight to all boards to ensure adequate securement. Only areas that can be made completely watertight in the same day's operations shall be coated. Un-used adhesive can be applied at a later date by simply replacing the mixing tip.

2. Installation Guidelines:

a) For ease of application, maintain a minimum material temperature of 70°F prior to use.
b) Store between 60°F and 80°F.
c) Adhesive shall not be used during inclement weather.
d) Adhesive shall not be applied to wet or damp surfaces.
e) Do not use warped or curled boards.

f) For uneven surfaces, trimming or slitting of boards may be necessary.
g) Approximate Set-Time:Air Temperature between 60-90°F = 5-8 minutes.
Air Temperature between 32-60°F = 8-15 minutes.

3. Coverage: Approximately 550 sq. ft. per case. Rates are based on an application pattern of 4 ribbons, 1/4-1/2 in. beads, 12 in. o.c. per 4 x 4 ft. board. Coverage rates may vary over irregular surfaces.

3.06 INSTALLATION OF MEMBRANE

A. The surface of the substrate shall be inspected prior to installation of the PVC roof membrane. The substrate shall be clean, dry, free from debris and smooth with no surface roughness or contamination. Broken, delaminated, wet or damaged protection boards shall be removed and replaced.

B. Water Based Membrane Adhesive:

1. Over the properly installed and prepared substrate, adhesive shall be poured out of the pail and spread using a medium nap roller. The membrane adhesive shall be applied at a rate according to Manufacturer's requirements. No adhesive is applied to the back of the PVC membrane. **Do not allow adhesive to skin-over or surface-dry prior to installation of PVC membrane.**

2. The PVC roof membrane is unrolled immediately into the wet water based membrane adhesive. Adjacent rolls overlap previous rolls by 3 inches. This process is repeated throughout the roof area. Immediately after application into adhesive, each roll shall be pressed firmly into place with a water-filled, foam-covered lawn roller by frequent rolling in two directions. **Do not allow adhesive to skin-over or surface-dry prior to installation of PVC membrane.**

Notes:

a) Sarnacol 2121 shall not be used if temperatures below 40º F are expected during application or subsequent drying time.

b) No adhesive shall be applied in seam areas. All membrane shall be applied in the same manner.
Membrane adhesive shall not be used on vertical surfaces or sloped surfaces greater than a 2 inch rise per 1 horizontal foot.

C. Membrane Termination Bar: After installing the adhered membrane; securely fasten a termination bar placed 4ft and 8 ft from the entire roof edge12 inches on center to the structural deck with acceptable fasteners. Hot air weld a 60 mils thickness color matched 8 inch cover strip over the termination bar.

3.07 HOT-AIR WELDING OF SEAM OVERLAPS

A. General

1. All seams shall be hot-air welded. Seam overlaps should be 3 inches wide when automatic machine-welding and 4 inches wide when hand-welding, except for certain details.

2. Welding equipment shall be provided by or approved by the membrane manufacturer. All mechanics intending to use the equipment shall have successfully completed a training course provided by the membrane manufacturer's Technical Representative prior to welding.

3. All membrane to be welded shall be clean and dry.

B. Hand-Welding

1. Hand-welded seams shall be completed in two stages. Hot-air welding equipment shall be allowed to warm up for at least one minute prior to welding.

2. The back edge of the seam shall be welded with a narrow but continuous weld to prevent loss of hot air during the final welding.

2. The nozzle shall be inserted into the seam at a 45 degree angle to the edge of the membrane. Once the proper welding temperature has been reached and the membrane begins to "flow," the hand roller is positioned perpendicular to the nozzle and rolled lightly. For straight seams, the 1-1/2 inch wide nozzle is recommended for use. For corners and compound connections, the 3/4 inch wide nozzle shall be used.

C. Machine Welding

1. Machine welded seams are achieved by the use of the membrane manufacturer's automatic welding equipment. When using this equipment, Manufacturer's instructions shall be followed and local codes for electric supply, grounding and over current protection observed. Dedicated circuit house power or a dedicated portable generator is recommended. No other equipment shall be operated simultaneously off the generator.

2. Metal tracks may be used over the deck membrane and under the machine welder to minimize or eliminate wrinkles.

D. Quality Control of Welded Seams

1. The Applicator shall check all welded seams for continuity using a rounded screwdriver. Visible evidence that welding is proceeding correctly is smoke during the welding operation, shiny membrane surfaces, and an uninterrupted flow of dark grey material from the underside of the top membrane. On-site evaluation of welded

seams shall be made daily by the Applicator at locations as directed by the Owner's Representative or the membrane manufacturer's representative. One inch wide cross-section samples of welded seams shall be taken at least two times a day. Correct welds display failure from shearing of the membrane prior to separation of the weld. Each test cut shall be patched by the Applicator at no extra cost to the Owner.

3.08 MEMBRANE FLASHINGS

All flashings shall be installed concurrently with the roof membrane as the job progresses. No temporary flashings shall be allowed without the prior written approval of the Owner's Representative and the membrane manufacturer. If any water is allowed to enter under the newly completed roofing, the affected area shall be removed and replaced at the Applicator's expense. Flashing shall be adhered to compatible, dry, smooth, and solvent-resistant surfaces. Use caution to ensure adhesive fumes are not drawn into the building.

A. VOC Compliant Flashing Adhesive

1. Over the properly installed and prepared flashing substrate, the flashing adhesive shall be applied according to instructions found on the Product Data Sheet. The flashing adhesive shall be applied in smooth, even coats with no gaps, globs or similar inconsistencies. Only an area which can be completely covered in the same day's operations shall be flashed. The bonded sheet shall be pressed firmly in place with a hand roller.

2. No adhesive shall be applied in seam areas that are to be welded. All panels of membrane shall be applied in the same manner, overlapping the edges of the panels as required by welding techniques.

B. Install peel stop according to the Detail Drawings with approved fasteners into the structural deck at the base of parapets, walls and curbs. Peel stop is required by the membrane manufacturer at the base of all tapered edge strips and at transitions, peaks, and valleys according to the Manufacturer's details.

C. The Manufacturer's requirements and recommendations and the specifications shall be followed. All material submittals shall have been accepted by the membrane manufacturer prior to installation.

D. All flashings shall extend a minimum of 8 inches above roofing level unless otherwise accepted in writing by the Owner's Representative and the membrane manufacturer's Technical Department.

E. All flashing membranes shall be consistently adhered to substrates. All interior and exterior corners and miters shall be cut and hot-air welded into place. No bitumen shall be in contact with the PVC membrane.

F. All flashing membranes shall be mechanically fastened along the counter-flashed top edge with Peel stop at 6-8 inches on center.

G. Membrane flashings shall be terminated according to the membrane manufacturer's recommended details.

3.09 METAL FLASHINGS

A. Metal details, fabrication practices and installation methods shall conform to the applicable requirements of the following:

1. Factory Mutual Loss Prevention Data Sheet 1-49 (latest issue).
2. Sheet Metal and Air Conditioning Contractors National Association, Inc. (SMACNA) - latest issue.

B. Metal, other than that provided by the membrane manufacturer, is not covered under the Manufacturer's warranty.

C. Complete all metal work in conjunction with roofing and flashings so that a watertight condition exists daily.

D. Metal shall be installed to provide adequate resistance to bending to allow for normal thermal expansion and contraction.

E. Metal joints shall be watertight.

F. Metal flashings shall be securely fastened into solid wood blocking. Fasteners shall penetrate the wood nailer a minimum of 1 inch.

G. Airtight and continuous metal hook strips are required behind metal fascias. Hook strips are to be fastened 12 inches on center into the wood nailer or masonry wall.

H. Counter flashings shall overlap base flashings at least 4 inches.

I. Hook strips shall extend past wood nailers over wall surfaces by 1-1/2 inch minimum and shall be securely sealed from air entry.

3.10 WALKWAY INSTALLATION

A. PVC Walk tread

Roofing membrane to receive PVC walk tread shall be clean and dry. Place chalk lines on deck sheet to indicate location of walk tread. Apply a continuous coat of VOC Compliant flashing adhesive to the deck sheet and the back of walk tread in accordance with the membrane manufacturer's technical requirements and press walk tread into place with a water-filled, foam-covered lawn roller. Clean the deck membrane in areas to be welded. Hot-air weld the entire perimeter of the walk tread to the PVC deck sheet. Check all

welds with a rounded screwdriver. Re-weld any inconsistencies. Important: Check all existing deck membrane seams that are to be covered by walk tread with rounded screwdriver and reweld any inconsistencies before walk tread installation.

3.11 TEMPORARY CUT-OFF

All flashings shall be installed concurrently with the roof membrane in order to maintain a watertight condition as the work progresses. All temporary waterstops shall be constructed to provide a 100% watertight seal. The new membrane shall be carried into the waterstop. The waterstop shall be sealed to the deck and/or substrate so that water will not be allowed to travel under the new or existing roofing. The edge of the membrane shall be sealed in a continuous heavy application of sealant as described in Section 2.08. When work resumes, the contaminated membrane shall be cut out. All sealant, contaminated membrane, fillers, etc. shall be removed from the work area and properly disposed of off site. None of these materials shall be used in the new work.

If inclement weather occurs while a temporary waterstop is in place, the Applicator shall provide the labor necessary to monitor the situation to maintain a watertight condition.

If any water is allowed to enter under the newly-completed roofing, the affected area shall be removed and replaced at the Applicator's expense.

3.12 COMPLETION

Prior to demobilization from the site, the work shall be reviewed as part of a POST-CONSTRUCTION Conference per 1.02 Item B above. All defects noted and non-compliances with the Specifications or the recommendations of the Manufacturer shall be itemized in a punch list. These items must be corrected immediately by the Applicator to the satisfaction of the Inspector and membrane manufacturer prior to demobilization.

All Warranties referenced in this Specification shall have been submitted and have been accepted at time of contract award.

END OF SECTION 07 54 05

City of San Diego

CONTRACTOR'S NAME: EC Constructors, Inc.
ADDRESS: 9834 River Street, Lakeside, CA 92040
TELEPHONE NO.: 619-440-7181 FAX NO.: 619-440-7180
CITY CONTACT: Damian Singleton - Contract Specialist, Email: DSingleton@sandiego.gov
Phone No. (619) 533-3482, Fax No. (619) 533-3633
JSleiman/ Bdoringo/Lad

CONTRACT DOCUMENTS

FOR

SOUTH MISSION BEACH LIFEGUARD STATION

VOLUME 2 OF 2

BID NO.: K-14-1180-DBB-3
SAP NO. (WBS/IO/CC): S-00793
CLIENT DEPARTMENT: 1912
COUNCIL DISTRICT: 2
PROJECT TYPE: BB

THIS CONTRACT IS SUBJECT TO THE FOLLOWING:

- THE CITY'S SUBCONTRACTING PARTICIPATION REQUIREMENTS FOR SLBE PROGRAM.
- PREVAILING WAGE RATES: STATE ☒ FEDERAL ☐
- APPRENTICE SHIP

THIS BIDDING DOCUMENT TO BE SUBMITTED IN ITS ENTIRETY
REFER TO VOLUME 1 COVER PAGE FOR TIME, DATE, AND LOCATION

TABLE OF CONTENTS

DESCRIPTION **PAGE NUMBER**

Volume 2 - Bidding Documents

The following forms must be completed in their entirety and submitted with the Bid. Include the form(s) even if the information does not apply. Where the information does not apply write in N/A. Failure to include any of the forms may cause the Bid to be deemed **non-responsive.** If you are uncertain or have any questions about any required information, contact the City no later than 14 days prior to Bid due date.

1. Bid/Proposal 3
2. Bid Bond 6
3. Non-Collusion Affidavit to be executed by Bidder and Submitted with Bid under 23 USC 112 and PCC 7106 7
4. Contractors Certification of Pending Actions 8
5. Equal Benefits Ordinance Certification of Compliance 9
6. Proposal (Bid) 10
7. Form AA35 - List of Subcontractors 13
8. Form AA40 - Named Equipment/Material Supplier List 14

PROPOSAL

Bidder's General Information

To the City of San Diego:

Pursuant to "Notice Inviting Bids", specifications, and requirements on file with the City Clerk, and subject to all provisions of the Charter and Ordinances of the City of San Diego and applicable laws and regulations of the United States and the State of California, the undersigned hereby proposes to furnish to the City of San Diego, complete at the prices stated herein, the items or services hereinafter mentioned. The undersigned further warrants that this bid is not made in the interest of, or on behalf of, any undisclosed person, partnership, company, association, organization, or corporation; that the bid is genuine and not collusive or sham; that the bidder has not directly or indirectly induced or solicited any other bidder to put in a false or sham bid, and has not directly or indirectly colluded, conspired, connived, or agreed with any bidder or anyone else to put in a sham bid, or that anyone shall refrain from bidding; that the bidder has not in any manner, directly or indirectly, sought by agreement, communication, or conference with anyone to fix the bid price of the bidder or any other bidder, or to fix any overhead, profit, or cost element of the bid price, or of that of any other bidder, or to secure any advantage against the public body awarding the contract of anyone interested in the proposed contract; that all statements contained in the bid are true; and, further, that the bidder has not, directly or indirectly, submitted his or her bid price or any breakdown thereof, or the contents thereof, or divulged information or data relative thereto, or paid, and will not pay, any fee to any corporation, partnership, company, association, organization, bid depository, or to any member or agent thereof to effectuate a collusive or sham bid.

The undersigned bidder(s) further warrants that bidder(s) has thoroughly examined and understands the entire Contract Documents (plans and specifications) and the Bidding Documents therefore, and that by submitting said Bidding Documents as its bid proposal, bidder(s) acknowledges and is bound by the entire Contract Documents, including any addenda issued thereto, as such Contract Documents incorporated by reference in the Bidding Documents.

IF A SOLE OWNER OR SOLE CONTRACTOR SIGN HERE:

(1) Name under which business is conducted_____

(2) Signature (Given and surname) of proprietor _____

(3) Place of Business (Street & Number) _____

(4) City and State _____ Zip Code _____

(5) Telephone No. _____ Facsimile No._____

(6) Email Address _____

IF A PARTNERSHIP, SIGN HERE:

(1) Name under which business is conducted _____

(2) Name of each member of partnership, indicate character of each partner, general or special (limited):

_____

_____

(3) Signature (Note: Signature must be made by a general partner)

_____

Full Name and Character of partner

_____

_____

(4) Place of Business (Street & Number) _____

(5) City and State _____ Zip Code _____

(6) Telephone No. _____ Facsimile No. _____

(7) Email Address _____

IF A CORPORATION, SIGN HERE:

(1) Name under which business is conducted EC Constructors, Inc.

(2) Signature, with official title of officer authorized to sign for the corporation:

_____
(Signature)

Sherri L. Summers
(Printed Name)

CEO
(Title of Officer)

(Impress Corporate Seal Here)

(3) Incorporated under the laws of the State of California

(4) Place of Business (Street & Number) 9834 River Street

(5) City and State Lakeside, CA Zip Code 92040

(6) Telephone No. 619-440-7181 Facsimile No. 619-440-7180

(7) Email Address jim@ecconstructors.com

THE FOLLOWING SECTIONS MUST BE FILLED IN BY ALL PROPOSERS:

In accordance with the "**NOTICE INVITING BIDS**", the bidder holds a California State Contractor's license for the following classification(s) to perform the work described in these specifications:

LICENSE CLASSIFICATION B & C8

LICENSE NO. 585677 EXPIRES 2/29/16

This license classification must also be shown on the front of the bid envelope. Failure to show license classification on the bid envelope may cause return of the bid unopened.

TAX IDENTIFICATION NUMBER (TIN): [redacted]

Email Address: jim@ecconstructors.com

THIS PROPOSAL MUST BE NOTARIZED BELOW:

I certify, under penalty of perjury, that the representations made herein regarding my State Contractor's license number, classification and expiration date are true and correct.

Signature _____ Title Sherri L. Summers, CEO

SUBSCRIBED AND SWORN TO BEFORE ME, THIS _____ DAY OF _____, _____.

Notary Public in and for the County of _____, State of _____

_____

(NOTARIAL SEAL)

CA Jurat Attached

State of California
County of San Diego

Subscribed and sworn to (or affirmed) before me on this 17th day of Nov., 2014, by Sherri L. Summers,
proved to me on the basis of satisfactory evidence to be the person(s) who appeared before me.

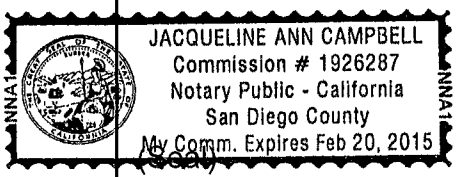

(Seal)

Signature

BID BOND

KNOW ALL MEN BY THESE PRESENTS,

That EC Constructors, Inc. as Principal, and Hartford Fire Insurance Company as Surety, are held and firmly bound unto The City of San Diego hereinafter called "OWNER," in the sum of **10% OF THE TOTAL BID AMOUNT** for the payment of which sum, well and truly to be made, we bind ourselves, our heirs, executors, administrators, successors, and assigns, jointly and severally, firmly by these presents.

WHEREAS, said Principal has submitted a Bid to said OWNER to perform the WORK required under the bidding schedule(s) of the OWNER's Contract Documents entitled

South Mission Beach Lifeguard Station, Project - K-15-1180-DBB-3

NOW THEREFORE, if said Principal is awarded a contract by said OWNER and, within the time and in the manner required in the "Notice Inviting Bids" enters into a written Agreement on the form of agreement bound with said Contract Documents, furnishes the required certificates of insurance, and furnishes the required Performance Bond and Payment Bond, then this obligation shall be null and void, otherwise it shall remain in full force and effect. In the event suit is brought upon this bond by said OWNER and OWNER prevails, said Surety shall pay all costs incurred by said OWNER in such suit, including a reasonable attorney's fee to be fixed by the court.

SIGNED AND SEALED, this 13th day of November, 20 14

EC Constructors, Inc. (SEAL)	Hartford Fire Insurance Company (SEAL)
(Principal)	(Surety)
By: _____	By: _____
(Signature)	(Signature) Charlotte Aquino, Attorney-in-Fact

(SEAL AND NOTARIAL ACKNOWLEDGEMENT OF SURETY)

CALIFORNIA ALL-PURPOSE ACKNOWLEDGMENT

STATE OF CALIFORNIA

County of San Diego }

On NOV 13 2014 (Date) before me, John Richard Flores JR. (Insert Name of Notary exactly as it appears on the official seal), Notary Public,

personally appeared Charlotte Aquino (Name(s) of Signer(s)),

who proved to me on the basis of satisfactory evidence to be the person(s) whose name(s) is/are subscribed to the within instrument and acknowledged to me that he/she/they executed the same in his/her/their authorized capacity(ies), and that by his/her/their signature(s) on the instrument the person(s), or the entity upon behalf of which the person(s) acted, executed the instrument.

I certify under PENALTY OF PERJURY under the laws of the State of California that the foregoing paragraph is true and correct.

Witness my hand and official seal.

Signature _____ (Signature of Notary Public) John Richard Flores JR.

JOHN RICHARD FLORES JR.
COMM. #2036097
Notary Public - California
San Diego County
My Comm. Expires Aug. 8, 2017

Place Notary Seal Above

OPTIONAL

Though the information below is not required by law, it may prove valuable to persons relying on the document and could prevent fraudulent removal and reattachment of the form to another document.

Description of Attached Document

Title or Type of Document: _____

Document Date: _____ Number of Pages: _____

Signer(s) Other Than Named Above: _____

Capacity(ies) Claimed by Signer(s)

Signer's Name: _____
- ☐ Individual
- ☐ Corporate Officer — Title(s): _____
- ☐ Partner ☐ Limited ☐ General
- ☑ Attorney in Fact
- ☐ Trustee
- ☐ Guardian or Conservator
- ☐ Other: _____

Signer is Representing:
Surety Company

RIGHT THUMBPRINT OF SIGNER
Top of thumb here

Signer's Name: _____
- ☐ Individual
- ☐ Corporate Officer — Title(s): _____
- ☐ Partner ☐ Limited ☐ General
- ☐ Attorney in Fact
- ☐ Trustee
- ☐ Guardian or Conservator
- ☐ Other: _____

Signer is Representing:

RIGHT THUMBPRINT OF SIGNER
Top of thumb here

POWER OF ATTORNEY

Direct Inquiries/Claims to:

THE HARTFORD
BOND, T-4
One Hartford Plaza
Hartford, Connecticut 06155
call: 888-266-3488 *or fax:* 860-757-5835

KNOW ALL PERSONS BY THESE PRESENTS THAT: Agency Code: 72-160200

- [X] **Hartford Fire Insurance Company**, a corporation duly organized under the laws of the State of Connecticut
- [X] **Hartford Casualty Insurance Company**, a corporation duly organized under the laws of the State of Indiana
- [ ] **Hartford Accident and Indemnity Company**, a corporation duly organized under the laws of the State of Connecticut
- [ ] **Hartford Underwriters Insurance Company**, a corporation duly organized under the laws of the State of Connecticut
- [ ] **Twin City Fire Insurance Company**, a corporation duly organized under the laws of the State of Indiana
- [ ] **Hartford Insurance Company of Illinois**, a corporation duly organized under the laws of the State of Illinois
- [ ] **Hartford Insurance Company of the Midwest**, a corporation duly organized under the laws of the State of Indiana
- [ ] **Hartford Insurance Company of the Southeast**, a corporation duly organized under the laws of the State of Florida

having their home office in Hartford, Connecticut, (hereinafter collectively referred to as the "Companies") do hereby make, constitute and appoint, ***up to the amount of unlimited:***

Lawrence F. McMahon, James Baldassare Jr., Sarah Myers, Maria Guise, Lilia Robinson, Charlotte Aquino, Jennifer L. Clampert, Janice Martin
of
San Diego, CA

their true and lawful Attorney(s)-in-Fact, each in their separate capacity if more than one is named above, to sign its name as surety(ies) only as delineated above by ☒, and to execute, seal and acknowledge any and all bonds, undertakings, contracts and other written instruments in the nature thereof, on behalf of the Companies in their business of guaranteeing the fidelity of persons, guaranteeing the performance of contracts and executing or guaranteeing bonds and undertakings required or permitted in any actions or proceedings allowed by law.

In Witness Whereof, and as authorized by a Resolution of the Board of Directors of the Companies on August 1, 2009 the Companies have caused these presents to be signed by its Vice President and its corporate seals to be hereto affixed, duly attested by its Assistant Secretary. Further, pursuant to Resolution of the Board of Directors of the Companies, the Companies hereby unambiguously affirm that they are and will be bound by any mechanically applied signatures applied to this Power of Attorney.

Wesley W. Cowling, Assistant Secretary

M. Ross Fisher, Vice President

STATE OF CONNECTICUT }
COUNTY OF HARTFORD } ss. Hartford

On this 12th day of July, 2012, before me personally came M. Ross Fisher, to me known, who being by me duly sworn, did depose and say: that he resides in the County of Hartford, State of Connecticut; that he is the Vice President of the Companies, the corporations described in and which executed the above instrument; that he knows the seals of the said corporations; that the seals affixed to the said instrument are such corporate seals; that they were so affixed by authority of the Boards of Directors of said corporations and that he signed his name thereto by like authority.

Kathleen T Maynard
Notary Public
My Commission Expires July 31, 2016

CERTIFICATE

I, the undersigned, Vice President of the Companies, DO HEREBY CERTIFY that the above and foregoing is a true and correct copy of the Power of Attorney executed by said Companies, which is still in full force effective as of NOV 13 2014
Signed and sealed at the City of Hartford.

Gary W. Stumper, Vice President

NON-COLLUSION AFFIDAVIT TO BE EXECUTED BY BIDDER AND SUBMITTED WITH BID UNDER 23 UNITED STATES CODE 112 AND PUBLIC CONTRACT CODE 7106

State of California)

) ss.

County of San Diego)

Sherri L. Summers, being first duly sworn, deposes and says that he or she is CEO of the party making the foregoing bid that the bid is not made in the interest of, or on behalf of, any undisclosed person, partnership, company, association, organization, or corporation; that the bid is genuine and not collusive or sham; that the bidder has not directly or indirectly induced or solicited any other bidder to put in a false or sham bid, and has not directly or indirectly colluded, conspired, connived, or agreed with any bidder or anyone else to put in a sham bid, or that anyone shall refrain from bidding; that the bidder has not in any manner, directly or indirectly, sought by agreement, communication, or conference with anyone to fix the bid price of the bidder or any other bidder, or to fix any overhead, profit, or cost element of the bid price, or of that of any other bidder, or to secure any advantage against the public body awarding the contract of anyone interested in the proposed contract; that all statements contained in the bid are true; and further, that the bidder has not, directly or indirectly, submitted his or her bid price or any breakdown thereof, or the contents thereof, or divulged information or data relative thereto, or paid, and will not pay, any fee to any corporation, partnership, company association, organization, bid depository, or to any member or agent thereof to effectuate a collusive or sham bid.

Signed: Sherri L Summers 11-20-14

Title: Sherri L. Summers, CEO

Subscribed and sworn to before me this _____day of_____,20___

_____

Notary Public

(SEAL)

CA Jurat Attached

State of California
County of San Diego

Subscribed and sworn to (or affirmed) before me on this 20th day of Nov., 2014, by Sherri L. Summers,
proved to me on the basis of satisfactory evidence to be the person(s) who appeared before me.

JACQUELINE ANN CAMPBELL
Commission # 1926287
Notary Public - California
San Diego County
My Comm. Expires Feb 20, 2015

(Seal)

Signature

CONTRACTORS CERTIFICATION OF PENDING ACTIONS

As part of its bid or proposal (Non-Price Proposal in the case of Design-Build contracts), the Bidder shall provide to the City a list of all instances within the past 10 years where a complaint was filed or pending against the Bidder in a legal or administrative proceeding alleging that Bidder discriminated against its employees, subcontractors, vendors or suppliers, and a description of the status or resolution of that complaint, including any remedial action taken.

CHECK ONE BOX ONLY.

☒ The undersigned certifies that within the past 10 years the Bidder has NOT been the subject of a complaint or pending action in a legal administrative proceeding alleging that Bidder discriminated against its employees, subcontractors, vendors or suppliers.

☐ The undersigned certifies that within the past 10 years the Bidder has been the subject of a complaint or pending action in a legal administrative proceeding alleging that Bidder discriminated against its employees, subcontractors, vendors or suppliers. A description of the status or resolution of that complaint, including any remedial action taken and the applicable dates is as follows:

DATE OF CLAIM	LOCATION	DESCRIPTION OF CLAIM	LITIGATION (Y/N)	STATUS	RESOLUTION/REMEDIAL ACTION TAKEN

Contractor Name: EC Constructors, Inc.

Certified By Sherri L. Summers Title CEO

Name

Signature Date 11-13-14

USE ADDITIONAL FORMS AS NECESSARY

EQUAL BENEFITS ORDINANCE CERTIFICATION OF COMPLIANCE

For additional information, contact:
CITY OF SAN DIEGO
EQUAL BENEFITS PROGRAM
202 C Street, MS 9A, San Diego, CA 92101
Phone (619) 533-3948 Fax (619) 533-3220

COMPANY INFORMATION

Company Name: EC Constructors, Inc.
Contact Name: Jim Summers
Company Address: 9834 River Street, Lakeside, CA 92040
Contact Phone: 619-440-7181
Contact Email: jim@ecconstructors.com

CONTRACT INFORMATION

Contract Title: South Mission Beach Lifeguard Station
approx. Start Date: 1/15/15
Contract Number (if no number, state location): K-14-1180-DBB-3
approx. End Date: 1/20/16

SUMMARY OF EQUAL BENEFITS ORDINANCE REQUIREMENTS

The Equal Benefits Ordinance [EBO] requires the City to enter into contracts only with contractors who certify they will provide and maintain equal benefits as defined in SDMC §22.4302 for the duration of the contract. To comply:

- Contractor shall offer equal benefits to employees with spouses and employees with domestic partners.
  - Benefits include health, dental, vision insurance; pension/401(k) plans; bereavement, family, parental leave; discounts, child care; travel/relocation expenses; employee assistance programs; credit union membership; or any other benefit.
  - Any benefit not offer an employee with a spouse, is not required to be offered to an employee with a domestic partner.
- Contractor shall post notice of firm's equal benefits policy in the workplace and notify employees at time of hire and during open enrollment periods.
- Contractor shall allow City access to records, when requested, to confirm compliance with EBO requirements.
- Contractor shall submit *EBO Certification of Compliance*, signed under penalty of perjury, prior to award of contract.

NOTE: This summary is provided for convenience. Full text of the EBO and Rules Implementing the EBO are available at *www.sandiego.gov/administration*.

CONTRACTOR EQUAL BENEFITS ORDINANCE CERTIFICATION

Please indicate your firm's compliance status with the EBO. The City may request supporting documentation.

☒ I affirm **compliance** with the EBO because my firm *(contractor must select one reason):*

- ☒ Provides equal benefits to spouses and domestic partners.
- ☐ Provides no benefits to spouses or domestic partners.
- ☐ Has no employees.
- ☐ Has collective bargaining agreement(s) in place prior to January 1, 2011, that has not been renewed or expired.

☐ I request the City's approval to pay affected employees a cash equivalent in lieu of equal benefits and verify my firm made a reasonable effort but is not able to provide equal benefits upon contract award. I agree to notify employees of the availability of a cash equivalent for benefits available to spouses but not domestic partners and to continue to make every reasonable effort to extend all available benefits to domestic partners.

It is unlawful for any contractor to knowingly submit any false information to the City regarding equal benefits or cash equivalent associated with the execution, award, amendment, or administration of any contract. [San Diego Municipal Code §22.4307(a)]

Under penalty of perjury under laws of the State of California, I certify the above information is true and correct. I further certify that my firm understands the requirements of the Equal Benefits Ordinance and will provide and maintain equal benefits for the duration of the contract or pay a cash equivalent if authorized by the City.

Sherri L. Summers, CEO		11-17-14
Name/Title of Signatory	Signature	Date

FOR OFFICIAL CITY USE ONLY

Receipt Date: EBO Analyst: ☐ Approved ☐ Not Approved – Reason:

(Rev 02/15/2011)

PROPOSAL (BID)

The Bidder agrees to the construction of **South Mission Beach Lifeguard Station**, for the City of San Diego, in accordance with these contract documents for the prices listed below. The Bidder guarantees the Contract Price for a period of 120 days (90 days for federally funded contracts and contracts valued at $500,000 or less) from the date of Bid opening to Award of the Contract. The duration of the Contract Price guarantee shall be extended by the number of days required for the City to obtain all items necessary to fulfill all conditions precedent e.g., bond and insurance.

Item	Quantity	Unit	NAICS	Payment Reference	Description	Unit Price	Extension
BASE BID							
1	1	LS	524126	2-4.1	Bonds (Payment and Performance)		$ 38,335.00
2	1	AL	236220	7-5.3	Building Permits: Mechanical, Structural, Plumbing, Electrical and related Fees , including City of San Diego, Water & Sewer Capacities and connection Fees.		$100,000.00
3	1	LS	236220	9-3.4.1	Mobilization		$ 90,000.00
4	1	LS	236220	01 02 50	Construction of South Mission Beach Lifeguard Station and related site improvements.		$3,251,530.00
5	1	LS	236220	701-13.9.5	Water Pollution Control Program Development		$1,402.00
6	1	LS	237990	701-13.9.5	Water Pollution Control Program Implementation		$9,565.00
7	1	AL		9-3.5	Field Orders		$200,000.00
8	1	AL	236220	01 02 50 - 08	Furniture, Fixtures and Equipments		$ 10,000.00
9	1	AL	236220	01 02 50 - 09	Roof Specialty Inspection		$ 3,000.00
10	1	AL	237990	01 02 50 - 10	Rip Rap Rock Removal ($50/ton x 200 tons)		$ 10,000.00
11	1	LS	238990	01 02 50 - 11	Dewatering		$ 2,337.00

Item	Quantity	Unit	NAICS	Payment Reference	Description	Unit Price	Extension
12	1	AL	541350	4-1.3.4	Special Inspections		$ 15,000.00
13	1	AL	236220	Technical Specifications Division 26	SDG&E Service Fee, dry utilites connections, Pack Bell, AT&T, and Time Warner		$ 5,000.00
						ESTIMATED TOTAL BASE BID:	$3,736,169.00

TOTAL BID PRICE FOR BID (Items 1 through 13 inclusive) amount written in words:

THREE MILLION SEVEN HUNDRED THIRTY SIX THOUSAND ONE HUNDRED SIXTY NINE AND ZERO CENTS

The Bid shall contain an acknowledgment of receipt of all addenda, the numbers of which shall be filled in on the Bid form. If an addendum or addenda has been issued by the City and not noted as being received by the Bidder, this proposal shall be rejected as being **non-responsive**. The following addenda have been received and are acknowledged in this bid: Addenda A & B

The names of all persons interested in the foregoing proposal as principals are as follows:

James J. Summers, President

Sherri L. Summers, CEO/Secretary

IMPORTANT NOTICE: If Bidder or other interested person is a corporation, state secretary, treasurer, and manager thereof; if a co-partnership, state true name of firm, also names of all individual co-partners composing firm; if Bidder or other interested person is an individual, state first and last names in full.

Bidder: Sherri L. Summers on behalf of EC Constructors, Inc.

Title: Secretary/ CEO

Business Address: 9834 River Street

Place of Business: Lakeside, CA

Place of Residence: Alpine, CA

Signature: [signature]

NOTES:

A. The City shall determine the low Bid based on the Base Bid alone.

B. Prices and notations shall be in ink or typewritten. All corrections (which have been initiated by the Bidder using erasures, strike out, line out, or "white-out") shall be typed or written in with ink adjacent thereto, and shall be initialed in ink by the person signing the bid proposal.

C. Failure to initial all corrections made in the bidding documents may cause the Bid to be rejected as **non-responsive** and ineligible for further consideration.

D. Blank spaces must be filled in, using figures. Bidder's failure to submit a price for any Bid item that requires the Bidder to submit a price shall render the Bid **non-responsive** and shall be cause for its rejection.

E. Unit prices shall be entered for all unit price items. Unit prices shall not exceed two (2) decimal places. If the Unit prices entered exceed two (2) decimal places, the City will only use the first two digits after the decimal points without rounding up or down.

F. All extensions of the unit prices bid will be subject to verification by the City. In the case of inconsistency or conflict between the product of the Quantity x Unit Price and the Extension, the product shall govern.

G. In the case of inconsistency or conflict, between the sums of the Extensions with the estimated total Bid, the sum of the Extensions shall govern.

H. Bids shall not contain any recapitulation of the Work. Conditional Bids will be rejected as being **non-responsive**. Alternative proposals will not be considered unless called for.

I. Subcontractors' License Number must be filled in. Failure to provide the information specified may deem the bidder **non-responsive**.

LIST OF SUBCONTRACTORS

In accordance with the requirements provided in the "Subletting and Subcontracting Fair Practices Act", Division 2, Part 1, Chapter 4 of the Public Contract Code, the Bidder shall list below the name and address of each Subcontractor who will perform work, labor, render services or specially fabricates and installs a portion [type] of the work or improvement, in an amount in excess of 0.5% of the Contractor's total Bid. The Bidder shall also list below the portion of the work which will be done by each subcontractor under this Contract. The Contractor shall list only one Subcontractor for each portion of the Work. The **DOLLAR VALUE** of the total Bid to be performed shall be stated for all subcontractors listed. Failure to comply with this requirement shall result in the Bid being rejected as **non-responsive** and ineligible for award. The Bidder's attention is directed to the Special Provisions - General; Paragraph 2-3 Subcontracts, which stipulates the percent of the Work to be performed with the Bidders' own forces. The Bidder shall list all SLBE, ELBE, DBE, DVBE, MBE, WBE, OBE, SDB, WoSB, HUBZone, and SDVOSB Subcontractors that Bidders are seeking recognition towards achieving any mandatory, voluntary, or both subcontracting participation percentages.

Subcontractors' License Number must be filled in. Failure to provide the information specified may deem the bidder **non-responsive**.

NAME, ADDRESS AND TELEPHONE NUMBER OF SUBCONTRACTOR	CONSTRUCTOR OR DESIGNER	SUBCONTRACTOR LICENSE NUMBER	TYPE OF WORK	DOLLAR VALUE OF SUBCONTRACT (MUST BE FILLED OUT)	MBE, WBE, DBE, DVBE, OBE, ELBE, SLBE, SDB, WoSB, HUBZone, OR SDVOSB①	WHERE CERTIFIED ②	CHECK IF JOINT VENTURE PARTNERSHIP
Name: William A. Steen Associates Address: 8580 La Mesa Blvd. City: La Mesa State: CA Zip: 91942 Phone: (619) 460-9000	Constructor		Survey	$8,960.00	SLBE	City of San Diego	
Name: Johnston Tractor, Inc. Address: 1824 Highlands View Road City: Alpine State: CA Zip: 91901 Phone: (619) 722-7505	Constructor	833490	Demo & Grading	~~$112,150.00~~ $102,000			
Name: Address: City: State: Zip: Phone:							

① As appropriate, Bidder shall identify Subcontractor as one of the following and shall include a valid proof of certification (except for OBE, SLBE and ELBE):

Certified Minority Business Enterprise	MBE	Certified Woman Business Enterprise	WBE
Certified Disadvantaged Business Enterprise	DBE	Certified Disabled Veteran Business Enterprise	DVBE
Other Business Enterprise	OBE	Certified Emerging Local Business Enterprise	ELBE
Certified Small Local Business Enterprise	SLBE	Small Disadvantaged Business	SDB
Woman-Owned Small Business	WoSB	HUBZone Business	HUBZone
Service-Disabled Veteran Owned Small Business	SDVOSB		

② As appropriate, Bidder shall indicate if Subcontractor is certified by:

City of San Diego	CITY	State of California Department of Transportation	CALTRANS
California Public Utilities Commission	CPUC	San Diego Regional Minority Supplier Diversity Council	SRMSDC
State of California's Department of General Services	CADoGS	City of Los Angeles	LA
State of California	CA	U.S. Small Business Administration	SBA

The Bidder will not receive any subcontracting participation percentages if the Bidder fails to submit the required proof of certification.

LIST OF SUBCONTRACTORS

In accordance with the requirements provided in the "Subletting and Subcontracting Fair Practices Act", Division 2, Part 1, Chapter 4 of the Public Contract Code, the Bidder shall list below the name and address of each Subcontractor who will perform work, labor, render services or specially fabricates and installs a portion [type] of the work or improvement, in an amount in excess of 0.5% of the Contractor's total Bid. The Bidder shall also list below the portion of the work which will be done by each subcontractor under this Contract. The Contractor shall list only one Subcontractor for each portion of the Work. The **DOLLAR VALUE** of the total Bid to be performed shall be stated for all subcontractors listed. Failure to comply with this requirement shall result in the Bid being rejected as **non-responsive** and ineligible for award. The Bidder's attention is directed to the Special Provisions - General; Paragraph 2-3 Subcontracts, which stipulates the percent of the Work to be performed with the Bidders' own forces. The Bidder shall list all SLBE, ELBE, DBE, DVBE, MBE, WBE, OBE, SDB, WoSB, HUBZone, and SDVOSB Subcontractors that Bidders are seeking recognition towards achieving any mandatory, voluntary, or both subcontracting participation percentages.

Subcontractors' License Number must be filled in. Failure to provide the information specified may deem the bidder **non-responsive**.

NAME, ADDRESS AND TELEPHONE NUMBER OF SUBCONTRACTOR	CONSTRUCTOR OR DESIGNER	SUBCONTRACTOR LICENSE NUMBER	TYPE OF WORK	DOLLAR VALUE OF SUBCONTRACT (MUST BE FILLED OUT)	MBE, WBE, DBE, DVBE, OBE, ELBE, SLBE, SDB, WoSB, HUBZone, OR SDVOSB①	WHERE CERTIFIED ②	CHECK IF JOINT VENTURE PARTNERSHIP
Name: Curtis Drilling Co. Address: 2625 S Santa Fe Avenue City: San Marcos State: CA Zip: 92069 Phone: (760) 727-7330	Constructor	624663	Sheet Piling	$80,871.00			
Name: Seal Right Paving Co. Address: City: Spring Valley State: CA Zip: Phone:	Constructor	364113	Asphalt & Striping	$37,255.00	SLBE	City of San Diego	
Name: Underground Pipeline Solutions, Inc. Address: P.O. Box 145 City: Alpine State: CA Zip: 91903 Phone: (619) 964-2276	Constructor	956807	Underground Utilities	$179,857.00	SLBE	City of San Diego	

① As appropriate, Bidder shall identify Subcontractor as one of the following and shall include a valid proof of certification (except for OBE, SLBE and ELBE):

Certified Minority Business Enterprise	MBE	Certified Woman Business Enterprise	WBE
Certified Disadvantaged Business Enterprise	DBE	Certified Disabled Veteran Business Enterprise	DVBE
Other Business Enterprise	OBE	Certified Emerging Local Business Enterprise	ELBE
Certified Small Local Business Enterprise	SLBE	Small Disadvantaged Business	SDB
Woman-Owned Small Business	WoSB	HUBZone Business	HUBZone
Service-Disabled Veteran Owned Small Business	SDVOSB		

② As appropriate, Bidder shall indicate if Subcontractor is certified by:

City of San Diego	CITY	State of California Department of Transportation	CALTRANS
California Public Utilities Commission	CPUC	San Diego Regional Minority Supplier Diversity Council	SRMSDC
State of California's Department of General Services	CADoGS	City of Los Angeles	LA
State of California	CA	U.S. Small Business Administration	SBA

The Bidder will not receive any subcontracting participation percentages if the Bidder fails to submit the required proof of certification.

LIST OF SUBCONTRACTORS

In accordance with the requirements provided in the "Subletting and Subcontracting Fair Practices Act", Division 2, Part 1, Chapter 4 of the Public Contract Code, the Bidder shall list below the name and address of each Subcontractor who will perform work, labor, render services or specially fabricates and installs a portion [type] of the work or improvement, in an amount in excess of 0.5% of the Contractor's total Bid. The Bidder shall also list below the portion of the work which will be done by each subcontractor under this Contract. The Contractor shall list only one Subcontractor for each portion of the Work. The **DOLLAR VALUE** of the total Bid to be performed shall be stated for all subcontractors listed. Failure to comply with this requirement shall result in the Bid being rejected as **non-responsive** and ineligible for award. The Bidder's attention is directed to the Special Provisions - General; Paragraph 2-3 Subcontracts, which stipulates the percent of the Work to be performed with the Bidders' own forces. The Bidder shall list all SLBE, ELBE, DBE, DVBE, MBE, WBE, OBE, SDB, WoSB, HUBZone, and SDVOSB Subcontractors that Bidders are seeking recognition towards achieving any mandatory, voluntary, or both subcontracting participation percentages.

Subcontractors' License Number must be filled in. Failure to provide the information specified may deem the bidder **non-responsive**.

NAME, ADDRESS AND TELEPHONE NUMBER OF SUBCONTRACTOR	CONSTRUCTOR OR DESIGNER	SUBCONTRACTOR LICENSE NUMBER	TYPE OF WORK	DOLLAR VALUE OF SUBCONTRACT (MUST BE FILLED OUT)	MBE, WBE, DBE, DVBE, OBE, ELBE, SLBE, SDB, WoSB, HUBZone, OR SDVOSB①	WHERE CERTIFIED ②	CHECK IF JOINT VENTURE PARTNERSHIP
Name: Amigos Design Build Landscapes, Inc. Address: 771 Jamacha Road # 372 City: El Cajon State: CA Zip: 92019 Phone: (619) 749-9530	Constructor	983654	Landscape	$91,924.00	SLBE	City of San Diego	
Name: Quality Reinforcing, Inc. Address: 13275 Gregg Street City: Poway State: CA Zip: 92064 Phone: (858) 748-8400	Constructor	683317	Reinforcing Steel	$217,055.00			
Name: Schwartz Masonry, Inc. Address: 9359 Alto Drive City: La Mesa State: CA Zip: 91941 Phone: (619) 668-0887	Constructor	590853	Masonry	$27,750.00			

① As appropriate, Bidder shall identify Subcontractor as one of the following and shall include a valid proof of certification (except for OBE, SLBE and ELBE):

Certified Minority Business Enterprise	MBE	Certified Woman Business Enterprise	WBE
Certified Disadvantaged Business Enterprise	DBE	Certified Disabled Veteran Business Enterprise	DVBE
Other Business Enterprise	OBE	Certified Emerging Local Business Enterprise	ELBE
Certified Small Local Business Enterprise	SLBE	Small Disadvantaged Business	SDB
Woman-Owned Small Business	WoSB	HUBZone Business	HUBZone
Service-Disabled Veteran Owned Small Business	SDVOSB		

② As appropriate, Bidder shall indicate if Subcontractor is certified by:

City of San Diego	CITY	State of California Department of Transportation	CALTRANS
California Public Utilities Commission	CPUC	San Diego Regional Minority Supplier Diversity Council	SRMSDC
State of California's Department of General Services	CADoGS	City of Los Angeles	LA
State of California	CA	U.S. Small Business Administration	SBA

The Bidder will not receive any subcontracting participation percentages if the Bidder fails to submit the required proof of certification.

LIST OF SUBCONTRACTORS

In accordance with the requirements provided in the "Subletting and Subcontracting Fair Practices Act", Division 2, Part 1, Chapter 4 of the Public Contract Code, the Bidder shall list below the name and address of each Subcontractor who will perform work, labor, render services or specially fabricates and installs a portion [type] of the work or improvement, in an amount in excess of 0.5% of the Contractor's total Bid. The Bidder shall also list below the portion of the work which will be done by each subcontractor under this Contract. The Contractor shall list only one Subcontractor for each portion of the Work. The **DOLLAR VALUE** of the total Bid to be performed shall be stated for all subcontractors listed. Failure to comply with this requirement shall result in the Bid being rejected as **non-responsive** and ineligible for award. The Bidder's attention is directed to the Special Provisions - General; Paragraph 2-3 Subcontracts, which stipulates the percent of the Work to be performed with the Bidders' own forces. The Bidder shall list all SLBE, ELBE, DBE, DVBE, MBE, WBE, OBE, SDB, WoSB, HUBZone, and SDVOSB Subcontractors that Bidders are seeking recognition towards achieving any mandatory, voluntary, or both subcontracting participation percentages.

Subcontractors' License Number must be filled in. Failure to provide the information specified may deem the bidder **non-responsive**.

NAME, ADDRESS AND TELEPHONE NUMBER OF SUBCONTRACTOR	CONSTRUCTOR OR DESIGNER	SUBCONTRACTOR LICENSE NUMBER	TYPE OF WORK	DOLLAR VALUE OF SUBCONTRACT (MUST BE FILLED OUT)	MBE, WBE, DBE, DVBE, OBE, ELBE, SLBE, SDB, WoSB, HUBZone, OR SDVOSB①	WHERE CERTIFIED ②	CHECK IF JOINT VENTURE PARTNERSHIP
Name: Systems Waterproofing, Inc. Address: 2925 E. Ricker Way City: Anaheim State: CA Zip: 92806 Phone: (714) 575-1115	Constructor	923679	Waterproofing	$52,200.00			
Name: ~~Golden State Roofing~~ Address: ~~19703 Eddington Drive~~ City: ~~Carson~~ State: ~~CA~~ Zip: ~~90746~~ Phone: ~~(310) 808-9242~~	~~Constructor~~	~~941466~~	~~Roofing~~	~~$59,325.00~~			
Name: Challenger Sheet Metal, Inc. Address: 9450 Canida Street City: Santee State: CA Zip: 92126 Phone: (858) 547-8040	Constructor	525782	Sheet Metal	$63,000.00			

① As appropriate, Bidder shall identify Subcontractor as one of the following and shall include a valid proof of certification (except for OBE, SLBE and ELBE):

Certified Minority Business Enterprise	MBE	Certified Woman Business Enterprise	WBE
Certified Disadvantaged Business Enterprise	DBE	Certified Disabled Veteran Business Enterprise	DVBE
Other Business Enterprise	OBE	Certified Emerging Local Business Enterprise	ELBE
Certified Small Local Business Enterprise	SLBE	Small Disadvantaged Business	SDB
Woman-Owned Small Business	WoSB	HUBZone Business	HUBZone
Service-Disabled Veteran Owned Small Business	SDVOSB		

② As appropriate, Bidder shall indicate if Subcontractor is certified by:

City of San Diego	CITY	State of California Department of Transportation	CALTRANS
California Public Utilities Commission	CPUC	San Diego Regional Minority Supplier Diversity Council	SRMSDC
State of California's Department of General Services	CADoGS	City of Los Angeles	LA
State of California	CA	U.S. Small Business Administration	SBA

The Bidder will not receive any subcontracting participation percentages if the Bidder fails to submit the required proof of certification.

LIST OF SUBCONTRACTORS

In accordance with the requirements provided in the "Subletting and Subcontracting Fair Practices Act", Division 2, Part 1, Chapter 4 of the Public Contract Code, the Bidder shall list below the name and address of each Subcontractor who will perform work, labor, render services or specially fabricates and installs a portion [type] of the work or improvement, in an amount in excess of 0.5% of the Contractor's total Bid. The Bidder shall also list below the portion of the work which will be done by each subcontractor under this Contract. The Contractor shall list only one Subcontractor for each portion of the Work. The **DOLLAR VALUE** of the total Bid to be performed shall be stated for all subcontractors listed. Failure to comply with this requirement shall result in the Bid being rejected as **non-responsive** and ineligible for award. The Bidder's attention is directed to the Special Provisions - General; Paragraph 2-3 Subcontracts, which stipulates the percent of the Work to be performed with the Bidders' own forces. The Bidder shall list all SLBE, ELBE, DBE, DVBE, MBE, WBE, OBE, SDB, WoSB, HUBZone, and SDVOSB Subcontractors that Bidders are seeking recognition towards achieving any mandatory, voluntary, or both subcontracting participation percentages.

Subcontractors' License Number must be filled in. Failure to provide the information specified may deem the bidder **non-responsive**.

NAME, ADDRESS AND TELEPHONE NUMBER OF SUBCONTRACTOR	CONSTRUCTOR OR DESIGNER	SUBCONTRACTOR LICENSE NUMBER	TYPE OF WORK	DOLLAR VALUE OF SUBCONTRACT (MUST BE FILLED OUT)	MBE, WBE, DBE, DVBE, OBE, ELBE, SLBE, SDB, WoSB, HUBZone, OR SDVOSB①	WHERE CERTIFIED ②	CHECK IF JOINT VENTURE PARTNERSHIP
Name: C-1 ROOFING Address: City: SPRING VALLEY State: CA Zip: Phone:	CONSTRUCTOR	542724	ROOFING	$69,914			
Name: Superior Door Systems Address: 8059 Wing Avenue City: El Cajon State: CA Zip: 92020 Phone: (619) 562-0224	Constructor	736878	Overhead Sectional Doors	$23,985.00			
Name: ~~Centex Glazing, Inc.~~ Address: ~~8260 Commercial Street~~ City: ~~La Mesa~~ State: ~~CA~~ Zip: ~~91942~~ Phone: ~~(619) 644-1981~~	~~Constructor~~	~~806989~~	~~Glazing~~	~~$126,300.00~~			

① As appropriate, Bidder shall identify Subcontractor as one of the following and shall include a valid proof of certification (except for OBE, SLBE and ELBE):

Certified Minority Business Enterprise	MBE	Certified Woman Business Enterprise	WBE
Certified Disadvantaged Business Enterprise	DBE	Certified Disabled Veteran Business Enterprise	DVBE
Other Business Enterprise	OBE	Certified Emerging Local Business Enterprise	ELBE
Certified Small Local Business Enterprise	SLBE	Small Disadvantaged Business	SDB
Woman-Owned Small Business	WoSB	HUBZone Business	HUBZone
Service-Disabled Veteran Owned Small Business	SDVOSB		

② As appropriate, Bidder shall indicate if Subcontractor is certified by:

City of San Diego	CITY	State of California Department of Transportation	CALTRANS
California Public Utilities Commission	CPUC	San Diego Regional Minority Supplier Diversity Council	SRMSDC
State of California's Department of General Services	CADoGS	City of Los Angeles	LA
State of California	CA	U.S. Small Business Administration	SBA

The Bidder will not receive any subcontracting participation percentages if the Bidder fails to submit the required proof of certification.

LIST OF SUBCONTRACTORS

In accordance with the requirements provided in the "Subletting and Subcontracting Fair Practices Act", Division 2, Part 1, Chapter 4 of the Public Contract Code, the Bidder shall list below the name and address of each Subcontractor who will perform work, labor, render services or specially fabricates and installs a portion [type] of the work or improvement, in an amount in excess of 0.5% of the Contractor's total Bid. The Bidder shall also list below the portion of the work which will be done by each subcontractor under this Contract. The Contractor shall list only one Subcontractor for each portion of the Work. The **DOLLAR VALUE** of the total Bid to be performed shall be stated for all subcontractors listed. Failure to comply with this requirement shall result in the Bid being rejected as **non-responsive** and ineligible for award. The Bidder's attention is directed to the Special Provisions - General; Paragraph 2-3 Subcontracts, which stipulates the percent of the Work to be performed with the Bidders' own forces. The Bidder shall list all SLBE, ELBE, DBE, DVBE, MBE, WBE, OBE, SDB, WoSB, HUBZone, and SDVOSB Subcontractors that Bidders are seeking recognition towards achieving any mandatory, voluntary, or both subcontracting participation percentages.

Subcontractors' License Number must be filled in. Failure to provide the information specified may deem the bidder **non-responsive**.

NAME, ADDRESS AND TELEPHONE NUMBER OF SUBCONTRACTOR	CONSTRUCTOR OR DESIGNER	SUBCONTRACTOR LICENSE NUMBER	TYPE OF WORK	DOLLAR VALUE OF SUBCONTRACT (MUST BE FILLED OUT)	MBE, WBE, DBE, DVBE, OBE, ELBE, SLBE, SDB, WoSB, HUBZone, OR SDVOSB①	WHERE CERTIFIED ②	CHECK IF JOINT VENTURE PARTNERSHIP
Name: E L Hobbs, Inc. Address: City: El Cajon State: CA Zip: Phone:	Constructor	777073	Gypsum Board	$32,500.00			
Name: Continental Marble & Tile Address: City: Corona State: CA Zip: Phone:	Constructor	394	Tile	$40,547			
Name: Dunn Painting Address: PO Box 255 City: Jamul State: CA Zip: 91935 Phone: (619) 507-8119	Constructor	702238	Painting	$23,400.00			

① As appropriate, Bidder shall identify Subcontractor as one of the following and shall include a valid proof of certification (except for OBE, SLBE and ELBE):

Certified Minority Business Enterprise	MBE	Certified Woman Business Enterprise	WBE
Certified Disadvantaged Business Enterprise	DBE	Certified Disabled Veteran Business Enterprise	DVBE
Other Business Enterprise	OBE	Certified Emerging Local Business Enterprise	ELBE
Certified Small Local Business Enterprise	SLBE	Small Disadvantaged Business	SDB
Woman-Owned Small Business	WoSB	HUBZone Business	HUBZone
Service-Disabled Veteran Owned Small Business	SDVOSB		

② As appropriate, Bidder shall indicate if Subcontractor is certified by:

City of San Diego	CITY	State of California Department of Transportation	CALTRANS
California Public Utilities Commission	CPUC	San Diego Regional Minority Supplier Diversity Council	SRMSDC
State of California's Department of General Services	CADoGS	City of Los Angeles	LA
State of California	CA	U.S. Small Business Administration	SBA

The Bidder will not receive any subcontracting participation percentages if the Bidder fails to submit the required proof of certification.

LIST OF SUBCONTRACTORS

In accordance with the requirements provided in the "Subletting and Subcontracting Fair Practices Act", Division 2, Part 1, Chapter 4 of the Public Contract Code, the Bidder shall list below the name and address of each Subcontractor who will perform work, labor, render services or specially fabricates and installs a portion [type] of the work or improvement, in an amount in excess of 0.5% of the Contractor's total Bid. The Bidder shall also list below the portion of the work which will be done by each subcontractor under this Contract. The Contractor shall list only one Subcontractor for each portion of the Work. The **DOLLAR VALUE** of the total Bid to be performed shall be stated for all subcontractors listed. Failure to comply with this requirement shall result in the Bid being rejected as **non-responsive** and ineligible for award. The Bidder's attention is directed to the Special Provisions - General; Paragraph 2-3 Subcontracts, which stipulates the percent of the Work to be performed with the Bidders' own forces. The Bidder shall list all SLBE, ELBE, DBE, DVBE, MBE, WBE, OBE, SDB, WoSB, HUBZone, and SDVOSB Subcontractors that Bidders are seeking recognition towards achieving any mandatory, voluntary, or both subcontracting participation percentages.

Subcontractors' License Number must be filled in. Failure to provide the information specified may deem the bidder **non-responsive**.

NAME, ADDRESS AND TELEPHONE NUMBER OF SUBCONTRACTOR	CONSTRUCTOR OR DESIGNER	SUBCONTRACTOR LICENSE NUMBER	TYPE OF WORK	DOLLAR VALUE OF SUBCONTRACT (MUST BE FILLED OUT)	MBE, WBE, DBE, DVBE, OBE, ELBE, SLBE, SDB, WoSB, HUBZone, OR SDVOSB①	WHERE CERTIFIED ②	CHECK IF JOINT VENTURE PARTNERSHIP
Name: WEST COAST IRON Address: City: SPRING VALLEY State: CA Zip: Phone:	CONSTRUCTOR	574017	STRUCTURAL STEEL	$68,336			
Name: SUN PACIFIC GLAZING Address: City: SPRING VALLEY State: CA Zip: Phone:	CONSTRUCTOR	777178	GLAZING	$100,000			
Name: RAL Investment Corporation Address: 11211 Sorento Valley Road City: San Diego State: CA Zip: 92121 Phone: (858) 444-4101	Constructor	927409	Lockers	$24,337.00	MBE, SDB	City of San Diego	

① As appropriate, Bidder shall identify Subcontractor as one of the following and shall include a valid proof of certification (except for OBE, SLBE and ELBE):

Certified Minority Business Enterprise	MBE	Certified Woman Business Enterprise	WBE
Certified Disadvantaged Business Enterprise	DBE	Certified Disabled Veteran Business Enterprise	DVBE
Other Business Enterprise	OBE	Certified Emerging Local Business Enterprise	ELBE
Certified Small Local Business Enterprise	SLBE	Small Disadvantaged Business	SDB
Woman-Owned Small Business	WoSB	HUBZone Business	HUBZone
Service-Disabled Veteran Owned Small Business	SDVOSB		

② As appropriate, Bidder shall indicate if Subcontractor is certified by:

City of San Diego	CITY	State of California Department of Transportation	CALTRANS
California Public Utilities Commission	CPUC	San Diego Regional Minority Supplier Diversity Council	SRMSDC
State of California's Department of General Services	CADoGS	City of Los Angeles	LA
State of California	CA	U.S. Small Business Administration	SBA

The Bidder will not receive any subcontracting participation percentages if the Bidder fails to submit the required proof of certification.

LIST OF SUBCONTRACTORS

In accordance with the requirements provided in the "Subletting and Subcontracting Fair Practices Act", Division 2, Part 1, Chapter 4 of the Public Contract Code, the Bidder shall list below the name and address of each Subcontractor who will perform work, labor, render services or specially fabricates and installs a portion [type] of the work or improvement, in an amount in excess of 0.5% of the Contractor's total Bid. The Bidder shall also list below the portion of the work which will be done by each subcontractor under this Contract. The Contractor shall list only one Subcontractor for each portion of the Work. The **DOLLAR VALUE** of the total Bid to be performed shall be stated for all subcontractors listed. Failure to comply with this requirement shall result in the Bid being rejected as **non-responsive** and ineligible for award. The Bidder's attention is directed to the Special Provisions - General; Paragraph 2-3 Subcontracts, which stipulates the percent of the Work to be performed with the Bidders' own forces. The Bidder shall list all SLBE, ELBE, DBE, DVBE, MBE, WBE, OBE, SDB, WoSB, HUBZone, and SDVOSB Subcontractors that Bidders are seeking recognition towards achieving any mandatory, voluntary, or both subcontracting participation percentages.

Subcontractors' License Number must be filled in. Failure to provide the information specified may deem the bidder **non-responsive**.

NAME, ADDRESS AND TELEPHONE NUMBER OF SUBCONTRACTOR	CONSTRUCTOR OR DESIGNER	SUBCONTRACTOR LICENSE NUMBER	TYPE OF WORK	DOLLAR VALUE OF SUBCONTRACT (MUST BE FILLED OUT)	MBE, WBE, DBE, DVBE, OBE, ELBE, SLBE, SDB, WoSB, HUBZone, OR SDVOSB①	WHERE CERTIFIED ②	CHECK IF JOINT VENTURE PARTNERSHIP
Name: GPS PLUMBING Address: City: SPRING VALLEY State: CA Zip: Phone:	CONSTRUCTOR	950919	PLUMBING	$133,000.00 ~~$135,000.00~~			
Name: A-1 Fire Protection, Inc. Address: 8655 Miramar Place City: San Diego State: CA Zip: 92121 Phone: (858) 623-2733	Constructor	388358	Fire Suppression	$14,500.00	SLBE	City of San Diego	
Name: ~~R&M Plumbing Contractors, Inc.~~ Address: ~~8825 Diamond Back Drive~~ City: ~~Santee~~ State: ~~CA~~ Zip: ~~92071~~ Phone: ~~(619) 504-6520~~	~~Constructor~~	~~956104~~	~~Plumbing~~	~~$148,500.00~~			

① As appropriate, Bidder shall identify Subcontractor as one of the following and shall include a valid proof of certification (except for OBE, SLBE and ELBE):

Certified Minority Business Enterprise	MBE	Certified Woman Business Enterprise	WBE
Certified Disadvantaged Business Enterprise	DBE	Certified Disabled Veteran Business Enterprise	DVBE
Other Business Enterprise	OBE	Certified Emerging Local Business Enterprise	ELBE
Certified Small Local Business Enterprise	SLBE	Small Disadvantaged Business	SDB
Woman-Owned Small Business	WoSB	HUBZone Business	HUBZone
Service-Disabled Veteran Owned Small Business	SDVOSB		

② As appropriate, Bidder shall indicate if Subcontractor is certified by:

City of San Diego	CITY	State of California Department of Transportation	CALTRANS
California Public Utilities Commission	CPUC	San Diego Regional Minority Supplier Diversity Council	SRMSDC
State of California's Department of General Services	CADoGS	City of Los Angeles	LA
State of California	CA	U.S. Small Business Administration	SBA

The Bidder will not receive any subcontracting participation percentages if the Bidder fails to submit the required proof of certification.

LIST OF SUBCONTRACTORS

In accordance with the requirements provided in the "Subletting and Subcontracting Fair Practices Act", Division 2, Part 1, Chapter 4 of the Public Contract Code, the Bidder shall list below the name and address of each Subcontractor who will perform work, labor, render services or specially fabricates and installs a portion [type] of the work or improvement, in an amount in excess of 0.5% of the Contractor's total Bid. The Bidder shall also list below the portion of the work which will be done by each subcontractor under this Contract. The Contractor shall list only one Subcontractor for each portion of the Work. The **DOLLAR VALUE** of the total Bid to be performed shall be stated for all subcontractors listed. Failure to comply with this requirement shall result in the Bid being rejected as **non-responsive** and ineligible for award. The Bidder's attention is directed to the Special Provisions - General; Paragraph 2-3 Subcontracts, which stipulates the percent of the Work to be performed with the Bidders' own forces. The Bidder shall list all SLBE, ELBE, DBE, DVBE, MBE, WBE, OBE, SDB, WoSB, HUBZone, and SDVOSB Subcontractors that Bidders are seeking recognition towards achieving any mandatory, voluntary, or both subcontracting participation percentages.

Subcontractors' License Number must be filled in. Failure to provide the information specified may deem the bidder **non-responsive**.

NAME, ADDRESS AND TELEPHONE NUMBER OF SUBCONTRACTOR	CONSTRUCTOR OR DESIGNER	SUBCONTRACTOR LICENSE NUMBER	TYPE OF WORK	DOLLAR VALUE OF SUBCONTRACT (MUST BE FILLED OUT)	MBE, WBE, DBE, DVBE, OBE, ELBE, SLBE, SDB, WoSB, HUBZone, OR SDVOSB①	WHERE CERTIFIED ②	CHECK IF JOINT VENTURE PARTNERSHIP
Name: PAC Heating & Air Conditioning Address: PO Box 1536 City: Lakeside State: CA Zip: 92040 Phone: (619) 561-9163	Constructor	750189	HVAC	$88,401.00			
Name: Titan Electric Group, Inc. Address: 10746 Kenney Street, Suite 301 City: Santee State: CA Zip: 92071 Phone:	Constructor	959497	Electrical	$258,216.00	SLBE	City of San Diego	
Name: McKernan Inc. Address: City: Redlands State: CA Zip: Phone:	Constructor	957421	Doors & Hardware	$92,150			

① As appropriate, Bidder shall identify Subcontractor as one of the following and shall include a valid proof of certification (except for OBE, SLBE and ELBE):

Certified Minority Business Enterprise	MBE	Certified Woman Business Enterprise	WBE
Certified Disadvantaged Business Enterprise	DBE	Certified Disabled Veteran Business Enterprise	DVBE
Other Business Enterprise	OBE	Certified Emerging Local Business Enterprise	ELBE
Certified Small Local Business Enterprise	SLBE	Small Disadvantaged Business	SDB
Woman-Owned Small Business	WoSB	HUBZone Business	HUBZone
Service-Disabled Veteran Owned Small Business	SDVOSB		

② As appropriate, Bidder shall indicate if Subcontractor is certified by:

City of San Diego	CITY	State of California Department of Transportation	CALTRANS
California Public Utilities Commission	CPUC	San Diego Regional Minority Supplier Diversity Council	SRMSDC
State of California's Department of General Services	CADoGS	City of Los Angeles	LA
State of California	CA	U.S. Small Business Administration	SBA

The Bidder will not receive any subcontracting participation percentages if the Bidder fails to submit the required proof of certification.

LIST OF SUBCONTRACTORS

In accordance with the requirements provided in the "Subletting and Subcontracting Fair Practices Act", Division 2, Part 1, Chapter 4 of the Public Contract Code, the Bidder shall list below the name and address of each Subcontractor who will perform work, labor, render services or specially fabricates and installs a portion [type] of the work or improvement, in an amount in excess of 0.5% of the Contractor's total Bid. The Bidder shall also list below the portion of the work which will be done by each subcontractor under this Contract. The Contractor shall list only one Subcontractor for each portion of the Work. The **DOLLAR VALUE** of the total Bid to be performed shall be stated for all subcontractors listed. Failure to comply with this requirement shall result in the Bid being rejected as **non-responsive** and ineligible for award. The Bidder's attention is directed to the Special Provisions - General; Paragraph 2-3 Subcontracts, which stipulates the percent of the Work to be performed with the Bidders' own forces. The Bidder shall list all SLBE, ELBE, DBE, DVBE, MBE, WBE, OBE, SDB, WoSB, HUBZone, and SDVOSB Subcontractors that Bidders are seeking recognition towards achieving any mandatory, voluntary, or both subcontracting participation percentages.

Subcontractors' License Number must be filled in. Failure to provide the information specified may deem the bidder **non-responsive**.

NAME, ADDRESS AND TELEPHONE NUMBER OF SUBCONTRACTOR	CONSTRUCTOR OR DESIGNER	SUBCONTRACTOR LICENSE NUMBER	TYPE OF WORK	DOLLAR VALUE OF SUBCONTRACT (MUST BE FILLED OUT)	MBE, WBE, DBE, DVBE, OBE, ELBE, SLBE, SDB, WoSB, HUBZone, OR SDVOSB①	WHERE CERTIFIED ②	CHECK IF JOINT VENTURE PARTNERSHIP
Name: PVI Address: City: SAN DIEGO State: CA Zip: Phone:	CONSTRUCTOR	924362	CASEWORK	$60,993.00			
Name: Address: City: State: Zip: Phone:							
Name: Address: City: State: Zip: Phone:							

① As appropriate, Bidder shall identify Subcontractor as one of the following and shall include a valid proof of certification (except for OBE, SLBE and ELBE):

Certified Minority Business Enterprise	MBE	Certified Woman Business Enterprise	WBE
Certified Disadvantaged Business Enterprise	DBE	Certified Disabled Veteran Business Enterprise	DVBE
Other Business Enterprise	OBE	Certified Emerging Local Business Enterprise	ELBE
Certified Small Local Business Enterprise	SLBE	Small Disadvantaged Business	SDB
Woman-Owned Small Business	WoSB	HUBZone Business	HUBZone
Service-Disabled Veteran Owned Small Business	SDVOSB		

② As appropriate, Bidder shall indicate if Subcontractor is certified by:

City of San Diego	CITY	State of California Department of Transportation	CALTRANS
California Public Utilities Commission	CPUC	San Diego Regional Minority Supplier Diversity Council	SRMSDC
State of California's Department of General Services	CADoGS	City of Los Angeles	LA
State of California	CA	U.S. Small Business Administration	SBA

The Bidder will not receive any subcontracting participation percentages if the Bidder fails to submit the required proof of certification.

LIST OF SUBCONTRACTORS

In accordance with the requirements provided in the "Subletting and Subcontracting Fair Practices Act", Division 2, Part 1, Chapter 4 of the Public Contract Code, the Bidder shall list below the name and address of each Subcontractor who will perform work, labor, render services or specially fabricates and installs a portion [type] of the work or improvement, in an amount in excess of 0.5% of the Contractor's total Bid. The Bidder shall also list below the portion of the work which will be done by each subcontractor under this Contract. The Contractor shall list only one Subcontractor for each portion of the Work. The **DOLLAR VALUE** of the total Bid to be performed shall be stated for all subcontractors listed. Failure to comply with this requirement shall result in the Bid being rejected as **non-responsive** and ineligible for award. The Bidder's attention is directed to the Special Provisions - General; Paragraph 2-3 Subcontracts, which stipulates the percent of the Work to be performed with the Bidders' own forces. The Bidder shall list all SLBE, ELBE, DBE, DVBE, MBE, WBE, OBE, SDB, WoSB, HUBZone, and SDVOSB Subcontractors that Bidders are seeking recognition towards achieving any mandatory, voluntary, or both subcontracting participation percentages.

Subcontractors' License Number must be filled in. Failure to provide the information specified may deem the bidder **non-responsive**.

NAME, ADDRESS AND TELEPHONE NUMBER OF SUBCONTRACTOR	CONSTRUCTOR OR DESIGNER	SUBCONTRACTOR LICENSE NUMBER	TYPE OF WORK	DOLLAR VALUE OF SUBCONTRACT (MUST BE FILLED OUT)	MBE, WBE, DBE, DVBE, OBE, ELBE, SLBE, SDB, WoSB, HUBZone, OR SDVOSB①	WHERE CERTIFIED ②	CHECK IF JOINT VENTURE PARTNERSHIP
Name: Address: City: State: Zip: Phone:							
Name: Address: City: State: Zip: Phone:							
Name: Address: City: State: Zip: Phone:							

① As appropriate, Bidder shall identify Subcontractor as one of the following and shall include a valid proof of certification (except for OBE, SLBE and ELBE):

Certified Minority Business Enterprise	MBE	Certified Woman Business Enterprise	WBE
Certified Disadvantaged Business Enterprise	DBE	Certified Disabled Veteran Business Enterprise	DVBE
Other Business Enterprise	OBE	Certified Emerging Local Business Enterprise	ELBE
Certified Small Local Business Enterprise	SLBE	Small Disadvantaged Business	SDB
Woman-Owned Small Business	WoSB	HUBZone Business	HUBZone
Service-Disabled Veteran Owned Small Business	SDVOSB		

② As appropriate, Bidder shall indicate if Subcontractor is certified by:

City of San Diego	CITY	State of California Department of Transportation	CALTRANS
California Public Utilities Commission	CPUC	San Diego Regional Minority Supplier Diversity Council	SRMSDC
State of California's Department of General Services	CADoGS	City of Los Angeles	LA
State of California	CA	U.S. Small Business Administration	SBA

The Bidder will not receive any subcontracting participation percentages if the Bidder fails to submit the required proof of certification.

LIST OF SUBCONTRACTORS

In accordance with the requirements provided in the "Subletting and Subcontracting Fair Practices Act", Division 2, Part 1, Chapter 4 of the Public Contract Code, the Bidder shall list below the name and address of each Subcontractor who will perform work, labor, render services or specially fabricates and installs a portion [type] of the work or improvement, in an amount in excess of 0.5% of the Contractor's total Bid. The Bidder shall also list below the portion of the work which will be done by each subcontractor under this Contract. The Contractor shall list only one Subcontractor for each portion of the Work. The **DOLLAR VALUE** of the total Bid to be performed shall be stated for all subcontractors listed. Failure to comply with this requirement shall result in the Bid being rejected as **non-responsive** and ineligible for award. The Bidder's attention is directed to the Special Provisions - General; Paragraph 2-3 Subcontracts, which stipulates the percent of the Work to be performed with the Bidders' own forces. The Bidder shall list all SLBE, ELBE, DBE, DVBE, MBE, WBE, OBE, SDB, WoSB, HUBZone, and SDVOSB Subcontractors that Bidders are seeking recognition towards achieving any mandatory, voluntary, or both subcontracting participation percentages.

Subcontractors' License Number must be filled in. Failure to provide the information specified may deem the bidder **non-responsive**.

NAME, ADDRESS AND TELEPHONE NUMBER OF SUBCONTRACTOR	CONSTRUCTOR OR DESIGNER	SUBCONTRACTOR LICENSE NUMBER	TYPE OF WORK	DOLLAR VALUE OF SUBCONTRACT (MUST BE FILLED OUT)	MBE, WBE, DBE, DVBE, OBE, ELBE, SLBE, SDB, WoSB, HUBZone, OR SDVOSB①	WHERE CERTIFIED ②	CHECK IF JOINT VENTURE PARTNERSHIP
Name: Address: City: State: Zip: Phone:							
Name: Address: City: State: Zip: Phone:							
Name: Address: City: State: Zip: Phone:							

① As appropriate, Bidder shall identify Subcontractor as one of the following and shall include a valid proof of certification (except for OBE, SLBE and ELBE):

Certified Minority Business Enterprise	MBE	Certified Woman Business Enterprise	WBE
Certified Disadvantaged Business Enterprise	DBE	Certified Disabled Veteran Business Enterprise	DVBE
Other Business Enterprise	OBE	Certified Emerging Local Business Enterprise	ELBE
Certified Small Local Business Enterprise	SLBE	Small Disadvantaged Business	SDB
Woman-Owned Small Business	WoSB	HUBZone Business	HUBZone
Service-Disabled Veteran Owned Small Business	SDVOSB		

② As appropriate, Bidder shall indicate if Subcontractor is certified by:

City of San Diego	CITY	State of California Department of Transportation	CALTRANS
California Public Utilities Commission	CPUC	San Diego Regional Minority Supplier Diversity Council	SRMSDC
State of California's Department of General Services	CADoGS	City of Los Angeles	LA
State of California	CA	U.S. Small Business Administration	SBA

The Bidder will not receive any subcontracting participation percentages if the Bidder fails to submit the required proof of certification.

LIST OF SUBCONTRACTORS

In accordance with the requirements provided in the "Subletting and Subcontracting Fair Practices Act", Division 2, Part 1, Chapter 4 of the Public Contract Code, the Bidder shall list below the name and address of each Subcontractor who will perform work, labor, render services or specially fabricates and installs a portion [type] of the work or improvement, in an amount in excess of 0.5% of the Contractor's total Bid. The Bidder shall also list below the portion of the work which will be done by each subcontractor under this Contract. The Contractor shall list only one Subcontractor for each portion of the Work. The **DOLLAR VALUE** of the total Bid to be performed shall be stated for all subcontractors listed. Failure to comply with this requirement shall result in the Bid being rejected as **non-responsive** and ineligible for award. The Bidder's attention is directed to the Special Provisions - General; Paragraph 2-3 Subcontracts, which stipulates the percent of the Work to be performed with the Bidders' own forces. The Bidder shall list all SLBE, ELBE, DBE, DVBE, MBE, WBE, OBE, SDB, WoSB, HUBZone, and SDVOSB Subcontractors that Bidders are seeking recognition towards achieving any mandatory, voluntary, or both subcontracting participation percentages.

Subcontractors' License Number must be filled in. Failure to provide the information specified may deem the bidder **non-responsive.**

NAME, ADDRESS AND TELEPHONE NUMBER OF SUBCONTRACTOR	CONSTRUCTOR OR DESIGNER	SUBCONTRACTOR LICENSE NUMBER	TYPE OF WORK	DOLLAR VALUE OF SUBCONTRACT (MUST BE FILLED OUT)	MBE, WBE, DBE, DVBE, OBE, ELBE, SLBE, SDB, WoSB, HUBZone, OR SDVOSB①	WHERE CERTIFIED ②	CHECK IF JOINT VENTURE PARTNERSHIP
Name: Address: City: State: Zip: Phone:							
Name: Address: City: State: Zip: Phone:							
Name: Address: City: State: Zip: Phone:							

① As appropriate, Bidder shall identify Subcontractor as one of the following and shall include a valid proof of certification (except for OBE, SLBE and ELBE):

Certified Minority Business Enterprise	MBE	Certified Woman Business Enterprise	WBE
Certified Disadvantaged Business Enterprise	DBE	Certified Disabled Veteran Business Enterprise	DVBE
Other Business Enterprise	OBE	Certified Emerging Local Business Enterprise	ELBE
Certified Small Local Business Enterprise	SLBE	Small Disadvantaged Business	SDB
Woman-Owned Small Business	WoSB	HUBZone Business	HUBZone
Service-Disabled Veteran Owned Small Business	SDVOSB		

② As appropriate, Bidder shall indicate if Subcontractor is certified by:

City of San Diego	CITY	State of California Department of Transportation	CALTRANS
California Public Utilities Commission	CPUC	San Diego Regional Minority Supplier Diversity Council	SRMSDC
State of California's Department of General Services	CADoGS	City of Los Angeles	LA
State of California	CA	U.S. Small Business Administration	SBA

The Bidder will not receive any subcontracting participation percentages if the Bidder fails to submit the required proof of certification.

LIST OF SUBCONTRACTORS

In accordance with the requirements provided in the "Subletting and Subcontracting Fair Practices Act", Division 2, Part 1, Chapter 4 of the Public Contract Code, the Bidder shall list below the name and address of each Subcontractor who will perform work, labor, render services or specially fabricates and installs a portion [type] of the work or improvement, in an amount in excess of 0.5% of the Contractor's total Bid. The Bidder shall also list below the portion of the work which will be done by each subcontractor under this Contract. The Contractor shall list only one Subcontractor for each portion of the Work. The **DOLLAR VALUE** of the total Bid to be performed shall be stated for all subcontractors listed. Failure to comply with this requirement shall result in the Bid being rejected as **non-responsive** and ineligible for award. The Bidder's attention is directed to the Special Provisions - General; Paragraph 2-3 Subcontracts, which stipulates the percent of the Work to be performed with the Bidders' own forces. The Bidder shall list all SLBE, ELBE, DBE, DVBE, MBE, WBE, OBE, SDB, WoSB, HUBZone, and SDVOSB Subcontractors that Bidders are seeking recognition towards achieving any mandatory, voluntary, or both subcontracting participation percentages.

Subcontractors' License Number must be filled in. Failure to provide the information specified may deem the bidder **non-responsive.**

NAME, ADDRESS AND TELEPHONE NUMBER OF SUBCONTRACTOR	CONSTRUCTOR OR DESIGNER	SUBCONTRACTOR LICENSE NUMBER	TYPE OF WORK	DOLLAR VALUE OF SUBCONTRACT (MUST BE FILLED OUT)	MBE, WBE, DBE, DVBE, OBE, ELBE, SLBE, SDB, WoSB, HUBZone, OR SDVOSB①	WHERE CERTIFIED ②	CHECK IF JOINT VENTURE PARTNERSHIP
Name: Address: City: State: Zip: Phone:							
Name: Address: City: State: Zip: Phone:							
Name: Address: City: State: Zip: Phone:							

① As appropriate, Bidder shall identify Subcontractor as one of the following and shall include a valid proof of certification (except for OBE, SLBE and ELBE):

Certified Minority Business Enterprise	MBE	Certified Woman Business Enterprise	WBE
Certified Disadvantaged Business Enterprise	DBE	Certified Disabled Veteran Business Enterprise	DVBE
Other Business Enterprise	OBE	Certified Emerging Local Business Enterprise	ELBE
Certified Small Local Business Enterprise	SLBE	Small Disadvantaged Business	SDB
Woman-Owned Small Business	WoSB	HUBZone Business	HUBZone
Service-Disabled Veteran Owned Small Business	SDVOSB		

② As appropriate, Bidder shall indicate if Subcontractor is certified by:

City of San Diego	CITY	State of California Department of Transportation	CALTRANS
California Public Utilities Commission	CPUC	San Diego Regional Minority Supplier Diversity Council	SRMSDC
State of California's Department of General Services	CADoGS	City of Los Angeles	LA
State of California	CA	U.S. Small Business Administration	SBA

The Bidder will not receive any subcontracting participation percentages if the Bidder fails to submit the required proof of certification.

NAMED EQUIPMENT/MATERIAL SUPPLIER LIST

The Bidder seeking the recognition of equipment, materials, or supplies obtained from Suppliers towards achieving any mandatory, voluntary, or both subcontracting participation percentages shall list the Supplier(s) on the Named Equipment/Material Supplier List. The Named Equipment/Material Supplier List, at a minimum, shall have the name, locations (City) and the **DOLLAR VALUE** of the Suppliers. The Bidder will be credited up to 60% of the amount to be paid to the Suppliers for such materials and supplies unless vendor manufactures or substantially alters materials and supplies in which case 100% will be credited. The Bidder is to indicate (Yes/No) whether listed firm is a supplier or manufacturer. In calculating the subcontractor participation percentages, vendors/suppliers will receive 60% credit of the listed **DOLLAR VALUE**, whereas manufacturers will receive 100% credit. If no indication provided, listed firm will be credited at 60% of the listed dollar value for purposes of calculating the Subcontractor Participation Percentage, Suppliers will receive 60% credit of the listed **DOLLAR VALUE**, whereas manufacturers will receive 100% credit. If no indication provided, listed firm will be credited at 60% of the listed **DOLLAR VALUE** for purposes of calculating the subcontractor participation percentages.

NAME, ADDRESS AND TELEPHONE NUMBER OF VENDOR/SUPPLIER	MATERIALS OR SUPPLIES	DOLLAR VALUE OF MATERIAL OR SUPPLIES (MUST BE FILLED OUT)	SUPPLIER (Yes/No)	MANUFACTURER (Yes/No)	MBE, WBE, DBE, DVBE, OBE, ELBE, SLBE, SDB, WoSB, HUBZone, OR SDVOSB①	WHERE CERTIFIED②
Name: Address: City: State: Zip: Phone:						
Name: Address: City: State: Zip: Phone:						
Name: Address: City: State: Zip: Phone:						

① As appropriate, Bidder shall identify Vendor/Supplier as one of the following and shall include a valid proof of certification (except for OBE,SLBE and ELBE):

Certified Minority Business Enterprise	MBE	Certified Woman Business Enterprise	WBE
Certified Disadvantaged Business Enterprise	DBE	Certified Disabled Veteran Business Enterprise	DVBE
Other Business Enterprise	OBE	Certified Emerging Local Business Enterprise	ELBE
Certified Small Local Business Enterprise	SLBE	Small Disadvantaged Business	SDB
Woman-Owned Small Business	WoSB	HUBZone Business	HUBZone
Service-Disabled Veteran Owned Small Business	SDVOSB		

② As appropriate, Bidder shall indicate if Vendor/Supplier is certified by:

City of San Diego	CITY	State of California Department of Transportation	CALTRANS
California Public Utilities Commission	CPUC	San Diego Regional Minority Supplier Diversity Council	SRMSDC
State of California's Department of General Services	CADoGS	City of Los Angeles	LA
State of California	CA	U.S. Small Business Administration	SBA

The Bidder will not receive any subcontracting participation percentages if the Bidder fails to submit the required proof of certification.

Proprietary design: These drawings and design are protected by common law copyright. All patentable material contained herein and originating with Dominy + Associates Architects @ domusstudio LLP shall be the property of Dominy + Associates Architects @ domusstudio LLP

Architectural Engineering & Parks Division, Engineering & Capitol Projects Department

South Mission Beach Lifeguard Station

700 N. Jetty Road - San Diego, California

PTS #323774

South Mission Beach Lifeguard Station
San Diego, California

Architectural Abbreviations

AP	ACCESS PANEL	ID	INSIDE DIAMETER
@	AT	INCL	INCLUDE(D)
AB	ANCHOR BOLT	INTEG	INTEGRATED
ABV	ABOVE		
A/C	AIR CONDITIONING	INSTR	INSTRUCTIONS
AC	ASPHALT CONCRETE	INS	INSULATE(D), (ION)
ACOUS	ACOUSTICAL	INT	INTERIOR
ADA	AMERICANS w/ DISABILITIES ACT		
ADD	ADDENDUM	JAN	JANITOR
ADH	ADHESIVE	JT	JOINT
ADJ	ADJACENT		
ADJT	ADJUSTABLE	KIT	KITCHEN
A.F.F.	ABOVE FINISH FLOOR	KO	KNOCKOUT
AGG	AGGREGATE		
ALT	ALTERNATE	LAM	LAMINATE(D)
ALUM	ALUMINUM	LAV	LAVATORY
ANOD	ANODIZED	LOC	LOCATION / LOCATE
ARCH	ARCHITECT(URAL)	LT	LIGHT
ASTM	AMERICAN SOCIETY FOR TESTING MATERIALS	LWC	LIGHTWEIGHT CONCRETE
AUTO	AUTOMATIC	MAX	MAXIMUM
A/V	AUDIO VISUAL	MECH	MECHANIC(AL)
AWMBS	AIR, WATER, MOISTURE BARRIER SYSTEM	MED	MEDIUM
		MFR	MANUFACTURER(R)
BD	BOARD	MIN	MINIMUM
BSMT	BASEMENT	MISC	MISCELLANEOUS
BM	BENCHMARK	MH	MANHOLE
BTWN	BETWEEN	MOD	MODIFIED
BIT	BITUMINOUS	MTL	METAL
BLDG	BUILDING	MULL	MULLION
BLKG	BLOCKING		
BTM	BOTTOM	N.I.C.	NOT IN CONTRACT
BTU	BRITISH THERMAL UNIT	NOM	NOMINAL
BUR	BUILT UP ROOF	N.T.S.	NOT TO SCALE
CAB	CABINET	o/	OVER
CBC	CALIFORNIA BUILDING CODE	O.C.	ON CENTER
CFM	CUBIC FOOT OF AIR PER MINUTE	OD	OUTSIDE DIAMETER
CIPC	CAST-IN-PLACE CONCRETE	oH	OVERHEAD
CJ	CONSTRUCTION JOINT	OPG	OPENING
CL	CENTER LINE		
CLG	CEILING	PA	PLANTER AREA
CLOS	CLOSET	PAR	PARALLEL
CLR	CLEAR(ANCE)	PCC	PRECAST CONCRETE
CMU	CONCRETE MASONRY UNIT	PERF	PERFORATE(D)
COL	COLUMN	PH	PANIC HARDWARE
COMB	COMBINATION	PL	PLATE
CONC	CONCRETE	P.L.	PROPERTY LINE
CONF	CONFERENCE	PLAM	PLASTIC LAMINATE
CONST	CONSTRUCTION	PLAS	PLASTER
CONT	CONTINUOUS/CONTINUE	PLY	PLYWOOD
CONTR	CONTRACT(OR)	PNL	PANEL
CORR	CORRIDOR	PSF	POUNDS PER SQUARE FOOT
CPT	CARPET(ED)	PSI	POUNDS PER SQUARE INCH
CT	CERAMIC TILE	PT	POINT / PAINT
CTR	COUNTER	P.T.	PRESSURE TREATED
CSI	CONSTRUCTION SPECIFICATIONS INSTITUTE	PVC	POLYVINYL CHLORIDE
d (D)	PENNY	R	RISER
DBL	DOUBLE	RA	RETURN AIR
DEMO	DEMOLISH/DEMOLITION	RAD	RADIUS
DTL	DETAIL	RD	ROOF DRAIN
D.F.	DRINKING FOUNTAIN	REF	REFERENCE
DIAG	DIAGONAL	REINF	REINFORCING (ED)
DIA	DIAMETER	REQ'D.	REQUIRED
DIM	DIMENSION	REV	REVISION(S), REVISED
DIV	DIVISION	RF	ROOF
DR	DOOR	RFL	REFLECT (ED) (IVE) (OR)
DN	DOWN	RM	ROOM
DS	DOWNSPOUT	R.O.	ROUGH OPENING
DWG	DRAWING		
		SA	SUPPLY AIR
(E)	EXISTING	SAWM	SELF ADHESIVE WATERPROOF MEMBRANE
EA.	EACH	SC	SOLID CORE
ELEC.	ELECTRIC(AL)	SCH	SCHEDULE
EL / ELEV	ELEVATION	SD	STORM DRAIN
ENC	ENCLOSE (URE)	SEC	SECTION
EQ	EQUAL	SHT	SHEET
EQUIP	EQUIPMENT	SHT'G	SHEATHING
EST	ESTIMATE	SIM	SIMILAR
EXH	EXHAUST	SLDG	SLIDING
EXIST	EXISTING	SPEC	SPECIFICATION(S)
EJ	EXPANSION JOINT	SQ	SQUARE
EXP	EXPOSED	SS	STAINLESS STEEL
EXT	EXTERIOR	STD	STANDARD
		STO/STOR	STORAGE
FAS	FASTEN, FASTENER	STL	STEEL
FAU	FORCED AIR UNIT	STRUCT	STRUCTURAL
FD	FLOOR DRAIN	SYM	SYMMETRY (ICAL)
FE	FIRE EXTINGUISHER		
F.E.C.	FIRE EXTINGUISHER CABINET	T	TREAD
F.F.	FINISHED FLOOR	T&B	TOP & BOTTOM
F.F.E.	FINISHED FLOOR ELEVATION	T&G	TONGUE & GROOVE
F.G.	FINISH GRADE	TEL	TELEPHONE
F.H.C.	FIRE HOSE CABINET	THK	THICK(NESS)
FIN	FINISH(ED)	T.O.	TOP OF
FL	FLOW LINE	T.O.C.	TOP OF CURB
FLASH	FLASHING	T.O.P.	TOP OF PARAPET
FLEX	FLEXIBLE	TV	TELEVISION
FLR	FLOOR(ING)	TYP	TYPICAL
F.O.C.	FACE OF CONCRETE / CURB		
F.O.F.	FACE OF FINISH	UBC	UNIFORM BUILDING CODE
F.O.M.	FACE OF MASONRY	UNFIN	UNFINISHED
F.O.S.	FACE OF STUDS	U.O.N./ U.N.O.	UNLESS OTHERWISE NOTED
FND	FOUNDATION		
FP	FIREPROOF		
FR	FIRE RATED	VB	VAPOR BARRIER/VINYL BASE
FRP	FIBER REINFORCED PANEL	VCT	VINYL COMPOSITION TILE
FT	FOOT	VERT	VERTICAL
FTG	FOOTING	V.I.F.	VERIFY IN FIELD
FURR	FURRED (ING)	VTR	VENT THROUGH ROOF
FUT	FUTURE	VTW	VENT THROUGH WALL
GA	GAGE, GAUGE	W/	WITH
GAL	GALLON	W/O	WITHOUT
GALV	GALVANIZED	WC	WATER CLOSET
GD	GRADE	WD	WOOD
GL	GLASS, GLAZING	WH	WALL HUNG
GLU-LAM	GLUED, PRESSURE-LAMINATED BEAM	WP	WATERPROOF
GYP	GYPSUM	WPF	WATERPROOFING
		WPM	WATERPROOF MEMBRANE
HB	HOSE BIBB		
HBD	HARDBOARD		
HC	HOLLOW CORE		
HDW	HARDWARE		
HDR	HEADER		
HM	HOLLOW METAL		
HOR	HORIZONTAL		
HR	HOUR		
HT	HEIGHT		
HVAC	HEATING/VENTILATING/ AIR CONDITIONING		
HWD	HARDWOOD		
HWH	HOT WATER HEATER		

Deferred Submittal

DEFERRED SUBMITTAL'S SHALL BE PROVIDED FOR THE FOLLOWING BUILDING COMPONENTS/ELEMENTS

A. AUTOMATIC FIRE SPRINKLER SYSTEM
B. FIRE ALARM

1. SUBMITTAL DOCUMENTS FOR DEFERRED SUBMITTAL ITEMS SHALL BE SUBMITTED TO THE BUILDING OFFICIAL FOR REVIEW AND APPROVAL BY CONTRACTOR AND COPIED TO THE ARCHITECT OF RECORD, AND NOT SUBMITTED BY THE INDIVIDUAL SUB-CONTRACTOR .

2. DEFERRED SUBMITTAL DOCUMENTS IN ADDITION TO THE SEAL OF THE RESPONSIBLE ENGINEER SHALL BEAR THE SHOP DRAWING APPROVAL STAMP OF THE ARCHITECT OF RECORD, ENGINEER OF RECORD, AND THE GENERAL CONTRACTOR ON ALL SHEETS OF THE PLANS AND COVER OF THE CALCULATION.

3. SUBMITTAL DOCUMENTS FOR DEFERRED SUBMITTAL ITEMS SHALL BE SUBMITTED IN A TIMELY MANNER THAT ALLOWS A MINIMUM OF THIRTY WORKING DAYS FOR THE INITIAL PLAN REVIEW. ALL COMPONENTS RELATED TO THE DEFERRED SUBMITTAL MUST BE ADDRESSED TO THE SATISFACTION OF THE PLAN CHECK DIVISION PRIOR TO APPROVAL OF THE SUBMITTAL ITEMS.

4. DEFERRED SUBMITTAL ITEMS SHALL NOT BE FABRICATED / INSTALLED UNTIL THEIR DESIGN AND SUBMITTAL DOCUMENTS HAVE BEEN APPROVED BY THE BUILDING OFFICIAL.
5. PROVIDE TWO COPIES OF THE DEFERRED SUBMITTAL DOCUMENTS FOR FINAL APPROVAL.

6. CONTRACTOR IS RESPONSIBLE FOR ALL COST FOR OBTAINING REQUIRED APPROVALS, PERMIT FEES, AND INSPECTION FEES FOR ALL DEFERRED APPROVALS.

Special Inspection & Off-site Fabrication

Special Inspection:

SEE STRUCTURAL DRAWINGS FOR LIST OF "SPECIAL INSPECTION PROGRAM".

Off-site Fabrication:

AN APPLICATION TO PERFORM OFF-SITE FABRICATION MUST BE SUBMITTED TO THE INSPECTION SERVICES DIVISION FOR APPROVAL PRIOR TO FABRICATION.

A CERTIFICATE OF COMPLIANCE FOR OFF-SITE FABRICATION MUST BE COMPLETED AND SUBMITTED TO THE INSPECTION SERVICES DIVISION PRIOR TO ERECTION OF PREFABRICATED COMPONENTS.

Structural Observation

WHERE OCCURS, SEE STRUCTURAL DRAWINGS SHEET S0.1 FOR STRUCTURAL OBSERVATION

General Notes

1. FOR ADDITIONAL NOTES, SEE SHEET T2.0

2. NOTICE TO THE APPLICANT / OWNER / OWNER'S AGENT /ARCHITECT OR ENGINEER OF RECORD : BY USING THIS PERMITTED CONSTRUCTION DRAWINGS FOR CONSTRUCTION/INSTALLATION OF THE WORK SPECIFIED HEREIN, YOU AGREE TO COMPLY WITH THE REQUIREMENTS OF THE CITY OF SAN DIEGO FOR SPECIAL INSPECTIONS, STRUCTURAL OBSERVATIONS, CONSTRUCTION MATERIAL TESTING AND OFF-SITE FABRICATION OF BUILDING COMPONENTS, CONTAINED IN THE STATEMENT OF SPECIAL INSPECTIONS AND, AS REQUIRED BY THE CALIFORNIA CONSTRUCTION CODE.

3. NOTICE TO THE CONTRACTOR / BUILDER / INSTALLER / SUB-CONTRACTOR / OWNER-BUILDE R: BY USING THIS PERMITTED CONSTRUCTION DRAWINGS FOR CONSTRUCTION/INSTALLATION OF THE WORK SPECIFIED HEREIN, YOU ACKNOWLEDGE AND ARE AWARE OF. THE REQUIREMENTS CONTAINED IN THE STATEMENT OF SPECIAL INSPECTIONS. YOU AGREE TO COMPLY WITH THE REQUIREMENTS OF THE CITY OF SAN DIEGO FOR SPECIAL INSPECTIONS, STRUCTURAL OBSERVATIONS, CONSTRUCTION MATERIAL TESTING AND OFF-SITE FABRICATION OF BUILDING COMPONENTS, CONTAINED IN THE STATEMENT OF SPECIAL INSPECTIONS AND, AS REQUIRED BY THE CALIFORNIA CONSTRUCTION CODES.

Contractor's Responsibilities

1. PURSUANT TO SECTION 4216 OF THE CALIFORNIA GOVERNMENT CODE, AT LEAST 2 WORKING DAYS PRIOR TO EXCAVATION, YOU MUST CONTACT THE REGIONAL NOTIFICATION CENTER (E.G., UNDERGROUND SERVICE ALERT OF SOUTHERN CALIFORNIA) AND OBTAIN AN INQUIRY INDENTIFICATION NUMBER.

2. NOTIFY SDG&E AT LEAST 10 DAYS PRIOR TO EXCAVATING WITHIN 10' OF SDG&E UNDERGROUND HIGH VOLTAGE TRANSMITSSION POWER LINES. (I.E., 69 KV & HIGHER)

Storm Water Protection

1. THIS PROJECT IS SUBJECT TO MUNICIPAL STORM WATER PERMIT ORDER NO. R9-2007-001 AND WPCP.

2. THIS PROJECT WILL FOLLOW PHASED GRADING NOT TO EXCEED FIVE ACRES PER PHASE.

3. THE CONTRACTOR SHALL COMPLY WITH THE REQUIREMENTS NOTED IN THE GREENBOOK 2012 CITY SUPPLEMENT SEC 701 - WATER POLLUTION CONTROL.

Building Data C.B.C. 2010 EDITION (TITLE 24)

Governing Codes: SEE SHEET T2.0 FOR REFERENCES

Type Of Construction: V-B - (NON RATED)

Sprinklered: ■ YES (Garage Only) ☐ NO

Occupancy: (2010 CBC) B; S-2 (RESCUE VEHICLE AREA) — OCCUPANCY IS PART OF MIXED-USE, NON-SEPARATED FROM PRIMARY USE)

Number Of Stories: 2 STORIES + MEZZANINE

Actual Height: - @ TOP OF PARAPET (- ALLOWED PER MC X.X.X.) - @ TYP. ROOF

Allowable Area (Table 5A) : BASIC 9,000 SF FOR NON-SEPARATED OCCUPANCIES

Allowable Area (Multi-Story): 9,000 SF X 2 = 18,000 S.F.

Actual Area:

	B OCCUPANCY	S-2 OCCUPANCY	TOTAL
MAIN LEVEL	1,806 SF	1,107 SF	2,913 SF
2ND LEVEL	682 SF	0 SF	682 SF
OBSERVATION LEVEL (MEZZANINE)	214 SF	0 SF	214 SF
TOTAL:	2,702 SF	1,107 SF	3,809 SF

Allowable Stories (Table 5A) : BASIC 2 STORIES

Actual Stories (Table 5A) : 2 STORIES + MEZZANINE

Exterior Wall Ratings: (Table 602): TYPE VB: 1 HOUR LESS THAN 10 FT./ NR ELSEWHERE FOR A3, B, E, AND S1 OCC.

Vicinity Map

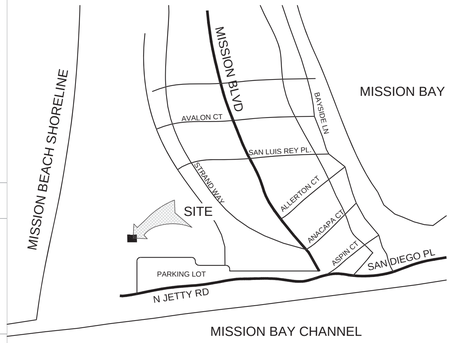

Project Data

Descretionary Approvals: SITE DEVELOPMENT PERMIT # 197971; COASTAL DEVELOPMENT PERMIT # 6-11-044

Project Name: SOUTH MISSION BEACH LIFEGUARD STATION

Project Description: DEMOLITION OF AN EXISTING 897 SQUARE-FOOT, THREE STORY LIFEGUARD TOWER BUILT IN 1974 AND CONSTRUCTION OF A NEW 3,676 SQUARE-FOOT, THREE STORY LIFEGUARD STATION.
WORK ALSO TO INCLUDE:
A. EROSION CONTROL BARRIER
B. EXTENSION OF 6 FOOT WIDE SIDEWALK.
C. RE-STRIPPING OF ACCESSIBLE PARKING STALLS.
D. LANDSCAPING REPAIR AS INDICATED.

Project Address: 700 N. JETTY RD. SAN DIEGO, CA 92109

Historic: No

Zone: MBPD-R-S

Existing Use: LIFEGUARD STATION

Approvals: SITE DEVELOPMENT PERMIT #197971; COASTAL DEVELOPMENT PERMIT #6-11-044

Legal Description: PUEBLO LOT 1803 OF PUEBLO LANDS OF SAN DIEGO, IN THE CITY OF SAN DIEGO, COUNTY OF SAN DIEGO, STATE OF CALIFORNIA, ACCORDING TO THE MAP THEREOF MADE BY JAMES PASCOE IN 1870, A COPY OF WHICH MAP IS FILED AS MISCELLANEOUS MAP NO. 36 IN THE OFFICE OF THE COUNTY RECORDER OF SAID COUNTY OF SAN DIEGO, BOUNDED ON THE NORTH BY THE WESTERNLY EXTENSION OF THE SOUTH LINE OF BALBOA COURT IN MISSION BEACH, AS SAME IS SHOWN ON MAP THEREOF NO. 1809, FILED IN THE COUNTY RECORDER'S OFFICE; BOUNDED ON ENTRANCE TO MISSION BAY (FALSE BAY); BOUNDED ON THE NORTHEAST AND EAST BY THE SOUTHWESTERLY LINES OF OCEAN FRONT WALK IN MISSION BEACH, THE SOUTHWESTERLY LINE OF MISSION BOULEVARD IN MISSION BEACH, AND THE SOUTHWESTERLY LINE OF THE LAND DESCRIBED IN DEED FROM UNION TRUST COMPANY OF SAN DIEGO, TO CITY OF SAN DIEGO, DATED FEBRUARY 3, 1906 AND RECORDED IN BOOK 700, PAGE 386 OF DEEDS.

A.P.N.: 423-750-01

Site Acreage: 9.79 ACRES (426,452 S.F.)

Lot Coverage: <.6%

Floor Area Ratio (F.A.R.): <.7%

Floor Area: 3,809 SF

Parking Existing:

STANDARD		272 SPACES
ACCESSIBLE		4 SPACES
	TOTAL:	276 SPACES

Parking Proposed:

STANDARD		266 SPACES
ACCESSIBLE		8 SPACES (4 Existing & 4 New)
	TOTAL:	274 SPACES

Bicycle Parking Proposed: (4) BICYCLE SPACES PROVIDED

Coastal Height Limit: 30 FEET FROM EXISTING GRADE

Building Height: 30 FEET FROM 12.02 ELEVATION / EXISTING GRADE. THE HIGHEST POINT OF THE ROOF, EQUIPMENT OR ANY VENT , PIPE, ANENNA OR OTHER PROJECTION SHALL NOT EXCEED 30 FT. ABOVE GRADE. (ORDINACE 11333 NS) - (AS MEASURED IN ACCORDANCE W/ THE UBC 1970 EDITION)

Permits: ANY DEMOLITION SHALL BE UNDER A SEPARATE PERMIT

Sheet Index

94 Sheets Total

Sheet_of 94	Discipline Code	Sheet No.	Sheet Name
1	G-1	T1.0	Title Sheet
2	G-2	T2.0	General Notes, Symbols & Abbreviations
3	G-3	T3.0	Existing Topo / Survey
4	G-4	T4.0	Site Development Conditions
5	G-5	T5.0	Coastal Development Conditions
6	G-6	PA0.1	Public Art Wall - 'Beach Castles'
			Civil
7	C-1	C-1	Title Sheet
8	C-2	C-2	General Notes
9	C-3	C-3	Details
10	C-4	C-4	Details
11	C-5	C-5	Demolition Plan
12	C-6	C-6	Demolition Plan
13	C-7	C-7	Grading and Drainage Plan
14	C-8	C-8	Utility Plan
15	C-9	C-9	Utility Plan
16	C-10	C-10	Erosion Control Notes and Details
17	C-11	C-11	Erosion Control Plan
18	C-12	C-12	Horizontal Control Plan
			Architectural
19	A-1	A0.1	Site Plan
20	A-2	A0.2	Enlarged Site Plan
21	A-3	A1.0	Construction Staging + Fencing Plan
22	A-4	A1.1	First Floor Plan
23	A-5	A1.2	Second Floor + Roof Plan
24	A-6	A1.3	Observation Floor + Roof Plan
25	A-7	A1.4	First Floor Reflected Ceiling Plan
26	A-8	A1.5	Second + Third Reflected Ceiling Plans
27	A-9	A2.0	Exterior Elevations
28	A-10	A2.1	Cast-In-Place Panel Layout
29	A-11	A3.0	Building Sections
30	A-12	A3.1	Wall Sections
31	A-13	A3.2	Wall Sections
32	A-14	A4.0	Enlarged Plans + Interior Elevations
33	A-15	A4.1	Enlarged Plans + Interior Elevations
34	A-16	A4.2	Stair Plans + Sections
35	A-17	A4.3	Interior Elevations
36	A-18	A5.0	Accessibility Details
37	A-19	A5.01	Accessibility Notes
38	A-20	A5.1	Details
39	A-21	A5.2	Details
40	A-22	A5.3	Details
41	A-23	A5.4	Details
42	A-24	A5.5	Details
43	A-25	A5.6	Details
44	A-26	A5.7	Details
45	A-27	A6.0	Door Schedule + Finish Schedule
46	A-28	A6.1	Window Schedule
47	A-29	A6.2	Wall Assemblies
			Structural
48	S-1	S1.1	General Notes
49	S-2	S1.2	General Notes
50	S-3	S1.3	Sheet Pile Plan, General Notes & Abbreviations
51	S-4	S1.4	Typical Details
52	S-5	S1.5	Typical Details
53	S-6	S1.6	City Wall Details
54	S-7	S2.1	Mat Foundation Plan
55	S-8	S2.1A	Mat Foundation Additional Reinforcing Plan & Details
56	S-9	S2.2	Second Floor Framing Plan & Second Floor Slab Plan
57	S-10	S2.3	Third Floor Framing Plan & Third Floor Slab Plan
58	S-11	S2.4	Observation Roof Framing Plan & Details
		S3.1	Not Used
59	S-12	S3.2	Third Floor Details
60	S-13	S3.3	Second Floor Details
61	S-14	S3.4	Second Floor Details
62	S-15	S3.5	Second Floor Details
63	S-16	S3.6	Second Floor Details
64	S-17	S3.7	Second Floor Details
65	S-18	S3.8	Details
			Mechanical
66	M-1	M0.1	Mechanical Legend and General Notes
67	M-2	M0.2	Mechanical Schedules
68	M-3	M0.3	Mechanical Title 24
69	M-4	M0.4	Mechanical Title 24
70	M-5	M0.5	Mechanical Title 24
71	M-6	M1.1	Frist Floor Mechanical Plan
72	M-7	M1.2	Second Floor and Roof Mechanical Plan
73	M-8	M1.3	Observation Floor Mechanical Plan
74	M-9	M4.1	Mechanical Details
75	M-10	M4.2	Mechanical Details
			Plumbing
76	P-1	P0.1	Plumbing Legend, Schedules + Notes
77	P-2	P1.0	Underfloor Plumbing Plan
78	P-3	P1.1	First Floor Plumbing Plan
79	P-4	P1.2	Second Floor + Roof Plumbing Plan
80	P-5	P1.3	Observation Floor Plumbing Plan
81	P-6	P3.1	Waste + Vent Diagram + Water Riser
82	P-7	P4.1	Plumbing Details
			Electrical
83	E-1	E0.1	Symbols List
84	E-2	E0.2	Fixture Schedules, Panel Schedule & Pictures
85	E-3	E0.3	Single Line Diagram
86	E-4	E1.0	Site Plan
87	E-5	E2.0	First Floor Power Plan
88	E-6	E2.1	Second Floor + Observation/Roof Power Plan
89	E-7	E2.2	First Floor Data Plan
90	E-8	E2.3	Second Floor + Observation/Roof Data Plans
91	E-9	E3.0	First Floor Lighting Plan
92	E-10	E3.1	Second Floor + Observation/Roof Lighting Plans
93	E-11	E4.0	Interior Title 24 Calculations
94	E-12	E4.1	Exterior Title 24 Calculations

Project Team

Legal Owner: SOUTH MISION BEACH LIFEGUARD STATION; CITY OF SAN DIEGO; ARCHITECTURAL ENGINEERING + PARKS DIVISION; ENGINEERING + CAPITOL PROJECTS DEPARTMENT; 525 B ST., SUITE 750 MS#908A; SAN DIEGO, CA 92101; 619.533.3108; 619.533.3112 FAX; CONTACT: JIHAD SLEIMAN; email: JSleiman@sandiego.gov

Architect: DOMUSSTUDIO ARCHITECTURE; 2150 W. WASHINGTON, SUITE 303; SAN DIEGO, CALIFORNIA 92110; 619.692.9393; CONTACT: Wayne Holtan (x15); email: wayne.holtan@domusstudio.com

Geotech: TERRA COSTA CONSULTING GROUP; 445 Murphy Canyon Rd., Suite 100; San Diego, CA 92123-4379; 858. 573.6900; 858. 573.8900 FAX; CONTACT: WALT CRAMPTON; email: wcrampton@terracosta.com

Civil: RBF CONSULTING; 975 Clairemont Mesa Blvd., Suite 100; San Diego, CA 92124; 858. 614.5000; 858. 614.5001 FAX; CONTACT: ROB GERKE; email: rgehrke@rbf.com

Structural: MARTIN + LIBBY STRUCTURAL ENGINEERS; 4452 Glacier Avenue; San Diego, CA 92120; 619. 280.9307; 619. 280.3533 FAX; CONTACT: JEAN LIBBY, P.E.; email: jlibby@libby-lei.com

Mechanical / Plumbing: M-E ENGINEERS, INC.; 3760 Convoy St., Ste. 340; San Diego, CA 92111; 858.565.3900; 858. 565.3906 FAX; CONTACT: LAWRENCE BROOKS, PE; email: lawrence.brooks@me-engineers.com

Electrical: KRUSE + ASSOCIATES; 12245 World Trade Drive, Suite A; San Diego, CA 92128; 858. 676.9776; 858. 676.9744 FAX; CONTACT: KEITH KRUSE; email: keith@kruseassoc.net

G-1

PLANS FOR THE CONSTRUCTION OF

South Mission Beach Lifeguard Station

Title Sheet — T1.0

CITY OF SAN DIEGO, CALIFORNIA
ENGINEERING & CAPITAL PROJECTS
ARCHITECTURAL ENGINEERING & CONTRACTS DIVISION
SHEET 01 OF 94 SHEETS

WBS S-00791

APPROVED: FOR CITY ENGINEER — DATE 10/13/2014

SUBMITTED BY: JIHAD SLEIMAN, PROJECT MANAGER

DESCRIPTION	BY	APPROVED	DATE	FILMED
ORIGINAL	WH/TT			

YOUSIF BENYAMIN, PROJECT ENGINEER

SEE SHEETS — CCS27 COORDINATES

SEE SHEETS — CCS83 COORDINATES

CONTRACTOR _____ DATE STARTED _____
INSPECTOR _____ DATE COMPLETED _____

32849-01-D

CONSTRUCTION CHANGE / ADDENDUM

CHANGE	DATE	AFFECTED OR ADDED SHEET NUMBERS

WARNING

0 1

IF THIS BAR DOES NOT MEASURE 1" THEN DRAWING IS NOT TO SCALE

CITY OF SAN DIEGO
PUBLIC WORKS PROJECT

Dominy Associates Architects @ domusstudio
2150 West Washington, Suite 303
San Diego, California 92110
Tel 619.692.9393
Fax 619.692.9394
domusstudio.com

SPEC. NO. 8147

LICENSED ARCHITECT — WAYNE HOLTAN — No. C12113 — REN. 9.30.15 — STATE OF CALIFORNIA

© COPYRIGHT October 13, 2014 at 7:51AM

Architectural Legend

California Green Building Standards Code

1. BICYCLE PARKING FOR PROJECTS WITH OVER 10 TENANT OCCUPANTS (10 EMPLOYEE OCCUPANTS) SHALL COMPLY WITH CGC SECTION 5.106.4.
2. FUEL-EFFICIENT VEHICLE PARKING WILL BE PROVIDED IN ACCORDANCE WITH CGC SECTION 5.106.5.1. PROVIDE PAINTED LETTERS IN THE PAINT USED FOR STALL STRIPING THAT READ: "CLEAN AIR VEHICLE" SUCH THAT THE LOWER EDGE OF THE LAST WORD ALIGNS WITH THE END OF THE STALL STRIPING AND IS VISIBLE BENEATH A PARKED VEHICLE.
3. EXTERIOR LIGHT POLLUTION MUST COMPLY WITH CGC SECTION 5.106.8.
4. CONTRACTOR SHALL PREPARE AND SUBMIT TO THE REGULATING AGENCY A "WASTE MANAGEMENT PLAN" THAT OUTLINES THE ITEMS LISTED IN CGC SECTION 5.408.2.
5. A MINIMUM OF 50% OF CONSTRUCTION WASTE IS TO BE RECYCLED PER CGC SECTION 5.408.3.
6. 100% OF TREES, STUMPS, ROCKS, VEGETATION AND ASSOCIATED SOILS PRIMARILY FROM THE CONSTRUCTION WILL BE REUSED OR RECYCLED PER CGC SECTION 5.408.4.
7. CONTRACTOR TO PROVIDE A BUILDING "SYSTEMS MANUAL" AS LISTED IN CGC SECTION 5.410.2.5. AND DELIVER TO THE BUILDING OWNER OR REPRESENTATIVE AND THE FACILITES OPERATOR. THE "SYSTEMS MANUAL" SHALL CONTAIN THE REQUIRED FEATURS LISTED IN CGC SECTION 5.410.2.5.1.
8. DURING CONSTRUCTION, THE ENDS OF DUCT OPENINGS ARE TO BE SEALED AND MECHANICAL EQUIPMENT IS TO BE COVERED PER CGC SECTION 5.504.3
9. VOC'S MUST COMPLY WITH THE LIMITATIONS LISTED IN CGC SECTION 5.504.4 AND TABLES 4.504.1, 5.504.4.1, 5.504,4.2, 5.504.4.3 AND 5.504.4.5 FOR ADHESIVES, SEALANTS, PAINTS, COATINGS, CARPET AND COMPOSITION WOOD PRODUCTS.
10. THE INSTALLATIONS OF HVAC, REFRIGERATION AND FIRE SUPPRESSION SYSTEMS WILL NOT CONTAIN CFC'S OR HALONS, PER CGC SECTION 5.508.1.
11. PRIOR TO THE FINAL APPROVAL OF THE BUILDING, THE LICENSED CONTRACTOR, ARCHITECT OR ENGINEER IN RESPONSIBLE CHARGE FO THE OVERALL CONSTRUCTION MUST COMPLETE AND SIGN THE GREEN BUILDING STANDARS CERTIFICATION FORM WHICH SHALL BE GIVEN TO THE BUILDING DEPARTMENT OFFICIAL TO BE FILED WITH THE APPROVED PLANS.
12. LANDSCAPE IRRIGATION WATER USE SHALL HAVE WEATHER BASED CONTROLLERS PER CGC SECTION 5.304.3.1.

Storm Water Quality Notes / Construction BMP's

1. BICYCLE PARKING FOR PROJECTS WITH OVER 10 TENANT OCCUPANTS (10 EMPLOYEE OCCUPANTS) SHALL COMPLY WITH CGC SECTION 5.106.4.
2. THIS PROJECT SHALL COMPLY WITH ALL REQUIREMENTS OF THE STATE PERMIT; CALIFORNIA REGIONAL WATER QUALITY CONTROL BOARD. NOTES BELOW REPRESENT KEY MINIMUM REQUIREMENTS FOR CONSTRUCTION BMP'S.
3. THE CONTRACTOR SHALL BE RESPONSIBLE FOR CLEANUP OF ALL SILT AND MUD ON ADJACENT STREET(S), DUE TO CONSTRUCTION VEHICLES OR ANY OTHER CONSTRUCTION ACTIVITY, AT THE END OF EACH WORK DAY, OR AFTER A STORM EVENT THAT CAUSES A BREECH IN INSTALLED CONSTRUCTION BMP'S WHICH MAY COMPROMISE STORM WATER QUALITY WITHIN ANY STREET(S). A STABILIZED CONSTRUCTION EXIT MAY BE REQUIRED TO PREVENT CONSTRUCTION VEHICLES OR EQUIPMENT FROM TRACKING MUD OR SILT ONTO THE STREET.
4. ALL STOCKPILES OF SOIL AND/OR BUILDING MATERIALS THAT ARE INTENDED TO BE LEFT FOR A PERIOD GREATER THAT SEVEN CALENDAR DAYS ARE TO BE COVERED. ALL REMOVABLE BMP DEVICES SHALL BE IN PLACE AT THE END OF EACH WORKING DAY WHEN FIVE DAY RAIN PROBABILITY FORECAST EXCEEDS 40%.
5. A CONCRETE WASHOUT SHALL BE PROVIDED ON ALL PROJECTS WHICH PROPOSE THE CONSTRUCTION OF ANY CONCRETE IMPROVEMENTS WHICH ARE TO BE POURED IN PLACE ON SITE.
6. THE CONTRACTOR SHALL RESTORE ALL EROSION/SEDIMENT CONTROL DEVICES TO WORKING ORDER AFTER EACH RUN-OFF PRODUCING RAINFALL OR AFTER ANY MATERIAL BREACH IN EFFECTIVENESS.
7. ALL SLOPES THAT ARE CREATED OR DISTURBED BY CONSTRUCTION ACTIVITY MUST BE PROTECTED AGAINST EROSION AND SEDIMENT TRANSPORT AT ALL TIMES.
8. THE STORAGE OF ALL CONSTRUCTION MATERIALS AND EQUIPMENT MUST BE PROTECTED AGAINST ANY POTENTIAL RELEASE OF POLLUTANTS IN THE ENVIRONMENT.
9. THE CONTRACTOR SHALL COMPLY WITH THE REQUIREMENTS NOTED IN THE GREENBOOK 2012 CITY SUPPLEMENT SEC 701 - WATER POLLUTION CONTROL.

Proprietary design: These drawings and design are protected by common law copyright. All patentable material contained herein and originating with Dominy + Associates Architects @ domusstudio LLP shall be the property of Dominy + Associates Architects @ domusstudio LLP

© COPYRIGHT October 13, 2014 at 8:20AM

General Notes

1. CONTRACTOR SHALL FIELD VERIFY ALL EXISTING CONDITIONS PRIOR TO BID AND CONSTRUCTION.
2. ALL CONTRACTORS SHALL REPORT ANY CONFLICT / INCONSISTENCIES IMMEDIATELY TO THE RESIDENT ENGINEER AND PRIOR TO PROCEEDING WITH THEIR WORK.
3. TO PROMOTE CLEAR COMMUNICATION IN THE FIELD, ALL QUESTIONS AND CLARIFICATIONS SHALL BE SUBMITTED, IN WRITING, TO THE RESIDENT ENGINEER IN A TIMELY MANNER. OFFICIAL RESOLUTIONS TO THESE ISSUES SHALL BE ISSUED IN WRITING ONLY.
4. LOCATIONS OF UTILITIES AS SHOWN IN DRAWINGS IS BASED UPON INFORMATION INCLUDED IN RECORD DRAWINGS. THE CONTRACTOR SHALL VERIFY THE LOCATION OF ALL UTILITIES. THE ARCHITECTS AND ARCHITECTS CONSULTANTS WILL NOT BE RESPONSIBLE FOR THE RECORD DRAWINGS. WHERE CONFLICTS ARISE BETWEEN ACTUAL LOCATION AND DRAWINGS, THE ARCHITECT SHALL BE NOTIFIED. UNLESS OTHERWISE NOTED. ALL UTILITIES SHALL BE PROVIDED AND INSTALLED UNDERGROUND.
5. ANY PERIODIC VISITS TO THE JOB SITE BY THE ARCHITECT ARE FOR THE PURPOSE OF DETERMINING COMPLIANCE WITH THE TECHNICAL PROVISIONS OF THE CONTRACT DOCUMENTS AND ARE IN NO WAY A GUARANTEE OF INSURANCE, NOR ASSUME RESPONSIBILITY FOR METHODS OR APPLIANCES USED BY THE CONTRACTOR, NOR THE SAFETY ON THE JOB IN COMPLIANCE WITH THE LAWS AND REGULATIONS.
6. DO NOT SCALE DRAWINGS, DIMENSIONS PREVAIL.
7. WHERE NO DETAILS ARE SHOWN OR NOTED FOR ANY PART OF THE WORK, THE DETAILS SHALL BE THE SAME AS FOR ANY OTHER SIMILAR WORK OR AS DIRECTED BY THE ARCHITECT.
8. ALL CONSTRUCTION MUST MEET OR EXCEED ALL REQUIREMENTS STATED IN SOILS REPORT. COPIES OF SOILS REPORTS ARE AVAILABLE UPON REQUEST.
9. ALL WORK UNDER ALL SECTIONS SHALL BE PERFORMED IN STRICT ACCORDANCE WITH THE HIGHEST STANDARDS OF PRACTICE RELATED TO THE TRADES INVOLVED, AND SHALL BE COMPLETE AND PROPERLY COORDINATED WITH ALL WORK ADJACENT OR RELATED TO IT.
10. FRAMER SHALL LAYOUT ALL STUDS / CEILING JOISTS / RAFTERS TO ACCOMMODATE RECESSED LIGHTS, EXHAUST FANS AND ANY OTHER ELECTRICAL / MECHANICAL FIXTURES.
11. THE CONTRACTOR SHALL PROVIDE AND PAY FOR TEMPORARY TELEPHONE SERVICE FOR THE JOB SITE DURING THE ENTIRE CONSTRUCTION.
12. OWNER SHALL PAY FOR BUILDING AND OTHER PERMITS. CONTRACTOR SHALL OBTAIN BUILDING AND OTHER PERMITS FROM THE CITY OF JURISDICTION.
13. IT IS THE INTENT OF THESE DOCUMENTS THAT THE WORK DESCRIBED HEREIN, WHEN ACCOMPLISHED, SHALL CONSTITUTE A COMPLETE JOB. ALL COORDINATION, FEES, TASKS, LABOR, MATERIALS, TOOLS, CONNECTIONS, EQUIPMENT, CLEANUP (UNLESS OTHERWISE NOTED IN DOCUMENTS) REQUIRED TO FULLY FINISH THE DESCRIBED PROJECT SHALL BE FURNISHED AND PAID FOR BY THE CONTRACTOR WITHIN THE SCOPE OF THE WORK. ANY AND ALL EXCEPTIONS SHALL BE REQUESTED AND AGREED TO IN WRITING AT THE TIME OF THE SIGNING OF THE OWNER / CONTRACTOR AGREEMENT.
14. FINISH GRADE SHALL SLOPE AWAY FROM THE BUILDING A MINIMUM OF 2%.
15. ALL NATURAL GAS APPLIANCES, THAT ARE INSTALLED IN THE BUILDING MUST BE EQUIPPED WITH APPROVED INTERMITTENT IGNITION DEVICES.
16. CONTRACTOR SHALL BE RESPONSIBLE TO PROVIDE PVC SLEEVES AND CHASERS BENEATH PAVING TO ALL AREAS INCLUDING RAISED PLANTERS FOR INSTALLATION OF UTILITY LINES.
17. IT IS THE INTENT OF THESE CONTRACT DOCUMENTS THAT THE NEW CONSTRUCTION OF THE PROJECT WHEN COMPLETED SHALL CONFORM TO REGULATIONS AT THE TIME OF PLAN CHECK, OF THE FOLLOWING CODES. GOVERNING CODES; PERFORM ALL WORK IN ACCORDANCE WITH THE LATEST EDITION OF CALIFORNIA ADMINISTRATIVE CODES AND THE FOLLOWING ADOPTED CODES AND REGULATIONS, AND STANDARDS:

    - CALIFORNIA AND FEDERAL OCCUPATIONAL HEALTH AND SAFETY ACTS
    - CALIFORNIA BUILDING STANDARDS CODE 2010 (WHICH ADOPTS THE 2009 IBC)
    - CALIFORNIA BUILDING CODE 2010
    - CALIFORNIA MECHANICAL CODE 2010 (WHICH ADOPTS THE 2009 UMC)
    - CALIFORNIA PLUMBING CODE 2010 (WHICH ADOPTS THE 2009 UPC)
    - CALIFORNIA ELECTRICAL CODE 2010 (WHICH ADOPTS THE 2008 NEC)
    - CALIFORNIA TITLE 24 2010
    - CALIFORNIA FIRE CODE 2010
    - NATIONAL FIRE PROTECTION ASSOC.
    - AMERICAN CONCRETE CODE
    - AMERICAN DISABILITY ACT
    - TCA CERAMIC TILE INSTALLATION 2011
    - MASONRY ASSOCIATION
    - CALIFORNIA ENERGY EFFICIENCY STANDARDS - 2008
    - 2012 GREENBOOK AND WHITEBOOK WITH STANDARD DRAWINGS
18. WORK IN FURRED AREAS SHALL NOT BE CONCEALED UNTIL SUCH WORK HAS BEEN INSPECTED AND APPROVED BY THE INSPECTING AUTHORITIES. IF SUCH WORK IS CONCEALED WITHOUT INSPECTION AND APPROVAL, THE CONTRACTOR SHALL BE FINANCIALLY RESPONSIBLE FOR ALL WORK REQUIRED TO OPEN AND RESTORE THE CONCEALED AREAS IN ADDITION TO ANY REQUIRED MODIFICATION TO THE SYSTEM AS WELL AS TO OTHER SYSTEMS.
19. CONTRACTOR TO PROVIDE ALL BACKING PLATES AND SUPPORTS FOR ITEMS SUCH AS, BUT NOT LIMITED TO, TOILET ACCESSORIES, TOILET PARTITIONS, MIRRORS, CASEWORK, HANDRAILS, ETC.
20. CONTRACTOR TO PROVIDE SEPARATION OR BARRIER BETWEEN ALL DISSIMILAR METALS.
21. ELEVATORS, ESCALATORS AND LIFTS SHALL COMPLY WITH CBC CHAPTER 30 ALL BUILDINGS AND STRUCTURES WITH ONE OR MORE SHALL BE PROVIDED WITH NOT LESS THAN ONE MEDICAL EMERGENCY SERVICE TO ALL LANDINGS MEETING THE PROVISIONS OF SECTION 3003.5.
22. VACUUM BREAKERS SHALL BE INSTALLED AT ALL HOSE BIBS.
23. ANY EXISTING STRUCTURE OR MATERIAL TO REMAIN THAT IS DISTURBED OR DAMAGED DURING CONSTRUCTION SHALL BE PATCHED TO MATCH EXISTING CONDITIONS.
24. WHERE WALLS AND CEILINGS ARE REQUIRED TO BE OF FIRE RESISTIVE OR NON-COMBUSTIBLE CONSTRUCTION AND WALLS ARE SET OUT OR CEILINGS ARE DROPPED. THE HANGERS AND ASSEMBLY MEMBERS OF SUCH DROPPED CEILINGS THAT ARE BELOW THE MAIN CEILING LINE SHALL BE OF NON-COMBUSTIBLE MATERIALS EXCEPT THAT IN TYPE III AND TYPE V CONSTRUCTION, FIRE RETARDANT TREATED WOOD MAY BE USED.
25. CONTRACTOR SHALL UTILIZE WINDOW PRODUCTS WITH FULL U-VALUE LABELING BY THE WINDOW MANUFACTURERS CHOICE OF DEFAULT OR NFRC-U METHOD. ALL EXTERIOR WINDOWS AND DOORS SHALL BE SET IN SEALANT, WEATHERSTRIPPED AND LABELED AS COMPLYING WITH ANSI STANDARD.
26. NO PERSON SHALL PERFORM ANY WORK ON ANY BUILDING OR STRUCTURE ADJACENT TO A PUBLIC WAY IN GENERAL USE BY THE PUBLIC FOR PEDESTRIAN TRAVEL, UNLESS THE PEDESTRIANS SHALL BE PROTECTED BY FENCES, CANOPIES, OR OTHER DEVICES. UBC 3303
27. SUPPLY AND INSTALL GALVANIZED SHEET METAL ROOF JACKS FOR VENTING. VENTS SHALL BE GANGED TOGETHER AND ROUTED TO BACKSIDE OF ROOF TO PENETRATE ROOF AS DIRECTED BY ARCHITECT, MIN. 18" FROM FASCIA & 18" MIN. FROM RIDGES.
28. EXPOSED HOT WATER AND DRAIN PIPES UNDER LAVATORY TO BE INSULATED OR COVERED AND BE FREE OF SHARP OR ABRASIVE SURFACES.
29. ALL EXISTING TO REMAIN MECHANICAL, ELECTRICAL, PLUMBING, AND EQUIPMENT, (DUCTS, WIRING, ETC) DISTURBED BY NEW CONSTRUCTION SHALL BE REROUTED OR MODIFIED AS REQUIRED TO PROVIDE A COMPLETE OPERATING SYSTEM.

Security Notes

1. CONTRACTOR SHALL FIELD VERIFY ALL EXISTING CONDITIONS PRIOR TO BID AND CONSTRUCTION.
2. SLIDING GLASS DOORS AND WINDOWS LOCATED LESS THAN 16 FEET ABOVE ANY SURFACE AVAILABLE FOR USE BY THE PUBLIC SHALL BE CAPABLE OF BEING LOCKED SECURELY. MOVEABLE PANELS SHALL NOT BE EASILY REMOVED FROM THE FRAME.
3. EXTERIOR WOODEN DOORS SHALL BE OF SOLID CORE CONSTRUCTION OR SHALL BE COVERED ON THE INSIDE FACE WITH 16-GAGE SHEER METAL ATTACHED WITH SCREWS AT 6 INCH ON CENTERS AROUND THE PERIMETER.
4. ALL SWINGING DOORS SHALL BE EQUIPPED WITH A DEAD BOLT WITH A MINIMUM THROW OF 1 INCH AND AN EMBEDMENT OF NOT LESS THAN 5/8 INCH.
5. UNFRAMED GLASS DOORS SHALL BE OF FULLY TEMPERED GLASS NOT LESS THAN 1/2 INCH THICK.
6. NARROW-FRAMED GLASS DOORS SHALL BE OF FULLY TEMPERED GLASS NOT LESS THAN 1/4 INCH THICK.
7. ANY GLASS THAT IS LOCATED WITHIN 40 INCHES OF THE LOCKING DEVICE ON A DOOR SHALL BE FULLY TEMPERED, OR HAVE APPROVED METAL BARS.
8. ALL NEW SECURITY GRILLS, DOORS AND WINDOWS MUST COMPLY WITH BUILDING SECURITY STANDARD, ORDINANCE #7-79.

Miscellaneous Notes

1. CONTRACTOR SHALL FIELD VERIFY ALL EXISTING CONDITIONS PRIOR TO BID AND CONSTRUCTION.
2. THE FINAL COMPACTION REPORT AND SOIL ENGINEER EXCAVATION INSPECTION REPORT MUST BE SUBMITTED TO THE BUILDING INSPECTOR PRIOR TO FOUNDATION INSPECTION AND THAT CITY INSPECTOR MUST INSPECT EXCAVATIONS BEFORE POURING ANY CONCRETE.
3. FIRE DAMPER ASSEMBLIES, INCLUDING SLEEVES, AND INSTALLATION PROCEDURES MUST BE AT THE SITE FOR THE BUILDING INSPECTORS USE.

Commercial Fire Notes

1. PLANS FOR ALL FIRE ALARM AND SPRINKLER SYSTEMS SHALL BE INCLUDED IN CONTRACT AND BE SUBMITTED TO THE LOCAL FIRE PROTECTION AUTHORITY AND FIRE MARSHAL FOR APPROVAL PRIOR TO INSTALLATION. PLANS FOR ALL FIXED FIRE PROTECTION EQUIPMENT (INCLUDING COMPLETE PLANS AND SPECIFICATIONS FOR FIRE ALARM SYSTEMS: FIRE-EXTINGUISHING SYSTEMS, INCLUDING AUTOMATIC SPRINKLERS AND WET & DRY STANDPIPES; HALON SYSTEMS AND OTHER SPECIAL TYPES OF AUTOMATIC FIRE -EXTINGUISHING SYSTEMS; BASEMENT PIPE INLETS; AND OTHER FIRE-PROTECTION SYSTEMS AND APPURTENANCES THERETO) SHALL BE PREPARED AND SUBMITTED BY INSTALLING CONTRACTOR TO THE FIRE PROTECTION BUREAU, FIRE MARSHAL AND ARCHITECT FOR APPROVAL PRIOR TO INSTALLATION. PLANS FOR STANDPIPES, SPRINKLER SYSTEMS OR FIRE ALARM SYSTEMS MUST BE SUBMITTED TO THE ARCHITECT FOR REVIEW AND ACCEPTANCE OF EXPOSED EQUIPMENT AND LOCATIONS, PRIOR TO REVIEW AND APPROVAL OF THE PLANS BY THE FIRE PREVENTION BUREAU. ALL EXPOSED HEADS SHALL BE STRATEGICALLY LOCATED IN THE CENTER OF THE CEILING TILES UNLESS OTHERWISE NOTED.
2. BUILDING CONTRACTOR SHALL SECURE PERMITS REQUIRED BY THE LOCAL FIRE PROTECTION AUTHORITY PRIOR TO OCCUPYING THIS BUILDING(S).
3. BUILDINGS UNDER CONSTRUCTION, ALTERATION OR DEMOLITION SHALL CONFORM TO CFC CHAPTER 14. FIRE DAMPER ASSEMBLIES, INCLUDING SLEEVES, ACCESS, AND INSTALLATION PROCEDURES, AND FIRE SPRINKLER PLANS AND FIRE-LIFE-SAFETY PLANS SHALL BE SUBMITTED FOR REVIEW, APPROVAL AND PERMIT ISSUANCE .
4. NO SMOKING OR COOKING IS ALLOWED IN STRUCTURES WHERE COMBUSTIBLE MATERIALS ARE EXPOSED OR WITHIN 25' OF COMBUSTIBLE MATERIALS STORAGE AREAS.
5. CUTTING, WELDING, OR OTHER HOT WORK SHALL BE IN CONFORMANCE WITH CFC CHAPTER 26.
6. APPROVAL OF THESE PLANS SHALL NOT PERMIT THE VIOLATION OF ANY CODE OR LAW. REQUIREMENTS OR FEATURES NOT IDENTIFIED ON THE PLAN MAY APPLY AND INSPECTORS MAY REQUIRE ADDITIONAL INFORMATION OR ITEMS FROM THOSE SHOWN ON THE PLAN DEPENDING ON ACTUAL OR ANTICIPATED FIELD CONDITIONS. SUCH CHANGES MAY NECESSITATE SUBMITTAL OF REVISED OR AS-BUILT PLANS TO THE FIRE DEPARTMENT AND THE CITY/COUNTY WHERE THE PROJECT IS LOCATED.
7. WHEN REQUIRED, EMERGENCY PLANS SHALL BE SUBMITTED TO FIRE OFFICIAL FOR REVIEW AND APPROVAL PRIOR TO OCCUPANCY. CFC 404.2

GENERAL REQUIREMENTS

8. ADDRESS NUMBERS SHALL BE PROVIDED FOR ALL NEW AND EXISTING BUILDINGS, BE A MINIMUM 4 INCHES HIGH (VERIFY WITH LOCAL FIRE AUTHORITY), CONTRAST WITH THEIR BACKGROUND, AND BE PLAINLY LEGIBLE AND VISIBLE FROM THE STREET OR ROAD FRONTING THE PROPERTY. TEMPORARY ADDRESS NUMBERS SHALL BE PROVIDED ON CONSTRUCTION FENCING OR THE BUILDING UNTIL PERMANENT NUMBERS CAN BE PROVIDED. CBC 501.2, CFC 505
9. PROVIDE AN APPROVED KNOX BOXES / KEY CABINETS IN AN APPROVED LOCATION. SEE PROPOSED LOCATION(S) ON SITE PLAN. COORDINATE FINAL LOCATION WITH FIRE OFFICIAL (506.1).
10. KNOX BOXES/KEY CABINETS SHALL BE PROVIDED FOR ALL HIGH-RISE BUILDINGS, POOL ENCLOSURES, GATES IN THE PATH OF FIREFIGHTER TRAVEL TO STRUCTURES, SECURED PARKING LEVELS, DOORS GIVING ACCESS TO ALARM PANELS AND/OR ANNUNCIATORS, AND ANY OTHER STRUCTURES OR AREAS WHERE IMMEDIATE ACCESS IS REQUIRED OR IS UNDULY DIFFICULT CONTACT YOUR LOCAL FIRE STATION TO ARRANGE AN APPOINTMENT TO SECURE MASTER BUILDING KEYS IN THE KNOX BOX.
11. DUMPSTERS AND TRASH CONTAINERS EXCEEDING 1.5 CUBIC YARDS SHALL NOT BE STORED IN BUILDINGS OR PLACED WITHIN 5 FEET OF COMBUSTIBLE WALLS, OPENINGS OR COMBUSTIBLE ROOF EAVE LINES UNLESS PROTECTED BY AN APPROVED SPRINKLER SYSTEM OR LOCATED IN A TYPE I OR IIA STRUCTURE SEPARATED BY 10 FEET FROM OTHER STRUCTURES. CONTAINERS LARGER THAN 1 CUBIC YARD SHALL BE OF NON- OR LIMITED-COMBUSTIBLE MATERIALS OR SIMILARLY PROTECTED OR SEPARATED. CFC 304.3
12. EXITS, EXIT SIGNS, FIRE ALARM PANELS, HOSE CABINETS, FIRE EXTINGUISHER LOCATIONS, AND STANDPIPE CONNECTIONS SHALL NOT BE CONCEALED BY CURTAINS, MIRRORS, OR OTHER DECORATIVE MATERIAL.
13. THE EGRESS PATH SHALL REMAIN FREE AND CLEAR OF ALL OBSTRUCTIONS AT ALL TIMES. NO STORAGE IS PERMITTED IN AISLES.
14. EXIT DOORS SHALL BE OPENABLE FROM THE INSIDE WITHOUT THE USE OF A KEY OR ANY SPECIAL KNOWLEDGE OR EFFORT. DOORS SHALL NOT BE PROVIDED WITH THUMB-TURN LOCKS OR DEADBOLTS THAT DO NOT UNLATCH IN TANDEM WITH THE NORMAL OPERATING LEVER. THE OPENING FORCE FOR INTERIOR DOORS WITHOUT CLOSERS SHALL NOT EXCEED 5 POUNDS. THE UNLATCHING AND OPENING FORCE FOR OTHER DOORS, INCLUDING FIRE DOORS, SHALL NOT EXCEED 15 POUNDS. CBC 1008
15. RATED DOORS SHALL BE SELF-CLOSING AND LATCHING; SUCH DOORS SHALL NOT BE EQUIPPED WITH DOOR STOPS OR OTHERWISE PROPPED OPEN. RATED DOORS SHALL BE EQUIPPED WITH RATED HARDWARE. CFC 703
16. THE EXIT PATH SHALL BE CLEARLY IDENTIFIED WITH EXIT SIGNS CONFORMING TO CBC 1011. STAIRS SERVING 4+ STORIES SHALL HAVE STAIRWELL SIGNS CONFORMING TO CBC 1022.8. ILLUMINATED EXIT SIGNS MUST HAVE 90-MINUTE EMERGENCY POWER BACK-UP. TACTILE SIGNS SHALL BE PROVIDED IN COMMERCIAL BUILDINGS, PUBLIC BUILDINGS AND ACCOMMODATIONS, AND PUBLICLY FUNDED HOUSING SUBJECT TO CBC CHAPTER 11B AND SHALL CONFORM TO 1117B.5.1, BE LOCATED FIVE FEET ABOVE FINISH FLOOR LEVEL AND, WHENEVER POSSIBLE, ON THE STRIKE SIDE OF THE DOOR. LETTERING SHALL BE BETWEEN 5/8" AND 2" HIGH. CBC 1011.3
17. THE EXIT PATH SHALL BE ILLUMINATED AT ALL TIMES IN ACCORDANCE WITH CBC 1006. EMERGENCY LIGHTING SHALL BE PROVIDED WITH 90-MINUTE BACK-UP.
18. RATED ASSEMBLIES SHALL CONFORM TO APPROVED METHODS AND MATERIALS OF CONSTRUCTION. PENETRATIONS THROUGH RATED WALLS, CEILINGS, OR FLOORS SHALL BE PROTECTED IN AN APPROVED MANNER COMPLYING WITH CBC/CFC CHAPTER 7.
19. THE REQUIRED FIRE-RESISTANCE RATING OF FIRE-RESISTANCE RATED CONSTRUCTION (INCLUDING WALLS, FIRESTOPS, SHAFT ENCLOSURES, PARTITIONS, SMOKE BARRIERS, FLOORS, FIRE RESISTIVE
20. COATINGS AND SPRAYED FIRE-RESISTANT MATERIALS APPLIED TO STRUCTURAL MEMBERS AND FIR-RESITANT JOINT SYSTEMS) SHALL BE MAINTAINED. (CFC 703.1)
21. IN AREAS WHERE RECESSED FIXTURES VIOLATE THE INTEGRITY OF A FIRE RATED ASSEMBLY, PROTECTION SHALL BE CONTINUOUS AROUND RECESSED FIXTURE TO MAINTAIN CONTINUITY OF THE FIRE RATED ASSEMBLY.
22. IN FIRE RESISTIVE CONSTRUCTION, THE FIRE RESISTIVE CONSTRUCTION SHALL BE MAINTAINED PASSING THROUGH ATTIC AND OTHER SIMILAR AREAS.
23. WALL, FLOOR AND CEILING FINISHES AND MATERIALS SHALL NOT EXCEED THE FLAME SPREAD CLASSIFICATIONS IN CFC TABLE 803.3. DECORATIVE MATERIALS SHALL BE PROPERLY TREATED BY A PRODUCT OR PROCESS APPROVED BY THE STATE FIRE MARSHAL WITH APPROPRIATE DOCUMENTATION PROVIDED TO THE BUILDING OFFICIAL.
14. ALL DECORATIVE MATERIALS SHALL BE MAINTAINED IN A FLAME RETARDANT CONDITION.
15. FIRE PROTECTION, INCLUDING FIRE APPARATUS ACCESS ROADS AND WATER SUPPLIES FOR FIRE PROTECTION, SHALL BE INSTALLED AND MADE SERVICEABLE PRIOR TO AND DURING TIME OF CONSTRUCTION. (CFC SEC. 501.4)
16. DEAD END ACCESS ROADWAYS IN EXCESS OF 150 FEET LONG SHALL BE PROVIDED WITH APPROVED PROVISIONS FOR THE TURNING AROUND OF FIRE DEPARTMENT APPARATUS. THE ACCESS ROADWAY SHALL BE EXTENDED TO WITHIN 150 FEET OF ALL PORTIONS OF THE EXTERIOR WALLS OF THE FIRST STORY OF ANY BUILDING. WHERE THE ACCESS ROADWAY CANNOT BE PROVIDED, APPROVED FIRE PROTECTION SYSTEM(S) SHALL BE PROVIDED AS REQUIRED AND APPROVED BY THE FIRE MARSHAL.

FIRE EXTINGUISHERS

17. LOCATIONS AND CLASSIFICATIONS OF EXTINGUISHERS SHALL BE IN ACCORDANCE WITH CFC 906 AND CCR TITLE 19. AT LEAST ONE EXTINGUISHER SHALL BE PROVIDED DURING CONSTRUCTION ON EACH FLOOR AT EACH STAIRWAY, IN EACH STORAGE AND CONSTRUCTION SHED, IN LOCATIONS WHERE FLAMMABLE OR COMBUSTIBLE LIQUIDS ARE STORED OR USED, OR WHERE SIMILAR HAZARDS ARE PRESENT PER CFC 1415.1. BEFORE FINAL OCCUPANCY, AT LEAST ONE 2A:10B:C EXTINGUISHER SHALL BE PROVIDED SO THAT NO POINT IS MORE THAN 75' TRAVEL DISTANCE FROM THE EXTINGUISHER. EXTINGUISHERS SHALL BE LOCATED ALONG THE PATH OF EGRESS TRAVEL AND IN A READILY VISIBLE AND ACCESSIBLE LOCATION, WITH THE BOTTOM OF THE EXTINGUISHER AT LEAST 4" ABOVE THE FLOOR. ADDITIONAL EXTINGUISHERS MAY BE REQUIRED BY INSPECTORS DEPENDING ON PROJECT OR SITE CONDITIONS AND FINAL PLACEMENT IS SUBJECT TO THEIR APPROVAL.
18. AT LEAST ONE FIRE EXTINGUISHER WITH A MINIMUM RATING OF 4-A-20BC (VERIFY RATING AND SIZE WITH INSPECTOR) SHALL BE PROVIDED OUTSIDE EACH MECHANICAL, ELECTRICAL, OR BOILER ROOM.

SPECIFIC REQUIREMENTS FOR ASSEMBLY OCCUPANCIES

19. OCCUPANT LOAD SIGN, WITH MINIMUM ONE-INCH LETTERS AND NUMBERS CONTRASTING WITH THEIR BACKGROUND, SHALL BE POSTED IN A CONSPICUOUS LOCATION NEAR THE MAIN EXIT PER CBC 1004.3 AND TITLE 19 3.30. WHERE MULTIPLE SEATING CONFIGURATIONS OR USES ARE ANTICIPATED, SEATING DIAGRAMS AND THEIR RESPECTIVE OCCUPANT LOADS MAY ALSO BE REQUIRED TO BE POSTED.
20. PANIC HARDWARE SHALL BE PROVIDED FOR ALL EXIT AND EXIT ACCESS DOORS IN ASSEMBLY OCCUPANCIES. SUCH DOORS SHALL SWING IN THE DIRECTION OF EXIT TRAVEL. DOORS EQUIPPED WITH PANIC HARDWARE SHALL HAVE NO OTHER LOCK OR LATCH UNLESS IT RELEASES AUTOMATICALLY UPON ACTIVATION OF THE PANIC HARDWARE. IF PANIC HARDWARE IS OMITTED ON THE MAIN DOOR WHEN PERMITTED BY CBC 1008.1.9.3, A SIGN STATING "THIS DOOR TO REMAIN UNLOCKED WHEN BUILDING IS OCCUPIED" IN MINIMUM 1-INCH LETTERS CONTRASTING WITH THEIR BACKGROUND SHALL BE POSTED IN A CONSPICUOUS LOCATION ON OR ADJACENT TO THE DOOR.
21. TABLES SHALL BE SPACED AT LEAST 50 INCHES APART WHERE SEATING IS BACK TO BACK AND AISLE ACCESSWAYS SERVE MORE THAN 4 OCCUPANTS OR ARE LONGER THAN SIX FEET. AISLE WIDTHS SHALL BE A MINIMUM OF 36 INCHES WHERE SEATING IS ONLY ON ONE SIDE OF THE AISLE OR 42 INCHES FOR SEATING ON BOTH SIDES. WHERE SEATS BACK UP INTO AISLES, SEAT BACKS SHALL BE LOCATED AT 19 INCHES FROM THE TABLE EDGE AND THE CLEAR AISLE WIDTH SHALL BE MEASURED FROM THE BACK OF THE SEAT. CBC 1028.9, 1017.4
22. OPEN FLAME IN ASSEMBLY AREAS IS PROHIBITED EXCEPT AS SPECIFICALLY PERMITTED BY THE FIRE DEPARTMENT IN COMPLIANCE WITH 2010 CFC 308.

EXTINGUISHING SYSTEMS

23. WHEN REQUIRED, AN AUTOMATIC FIRE SPRINKLER SYSTEM SHALL BE PROVIDED THROUGHOUT THE BUILDING IN COMPLIANCE WITH 2010 NFPA 13 (13-R) AND CFC 903. REVIEW AND APPROVAL OF A SPRINKLER PLAN IS REQUIRED PRIOR TO INSTALLATION OR MODIFICATION.
24. ALL VALVES CONTROLLING THE WATER SUPPLY FOR AUTOMATIC SPRINKLER SYSTEMS, PUMPS, TANKS, WATER LEVELS AND TEMPERATURES, CRITICAL AIR PRESSURES AND WATER-FLOW SWITCHES ON ALL SPRINKLER SYSTEMS SHALL BE ELECTRONICALLY SUPERVISED BY A LISTED FIRE ALARM CONTROL UNIT. (UFC 903.4)
25. AN AUTOMATIC EXTINGUISHING SYSTEM SHALL BE PROVIDED TO PROTECT COMMERCIAL-TYPE FOOD HEATING EQUIPMENT THAT PRODUCES GREASE-LADEN VAPORS AND SHALL COMPLY WITH 2010 CFC AND CMC AND 2002 NFPA 17A. REVIEW AND APPROVAL OF A HOOD AND DUCT EXTINGUISHING SYSTEM PLAN IS REQUIRED PRIOR TO INSTALLATION OR USE OF COOKING EQUIPMENT.
26. ONE EXTERIOR APPROVED AUDIBLE DEVICE SHALL BE CONNECTED TO EVERY AUTOMATIC SPRINKLER SYSTEM IN AN APPROVED LOCATION. WHERE A BUILDING FIRE ALARM IS INSTALLED, ACTUATION OF THE AUTOMATIC SPRINKLER SYSTEM SHALL ACTUATE THE BUILDING FIRE ALARM SYSTEM. (CFC 903.4.2)

FIRE HYDRANTS AND STANDPIPES

27. FIRE HYDRANTS SHALL COMPLY WITH FIRE DEPARTMENT REQUIREMENTS FOR ON SITE FIRE HYDRANTS. (CFC 507.5)
28. IN BUILDINGS FOUR OR MORE STORIES IN HEIGHT, STANDPIPES SHALL BE PROVIDED DURING CONSTRUCTION WHEN THE HEIGHT REACHES 40 FEET ABOVE THE LOWEST POINT OF FIRE DEPARTMENT ACCESS. A FIRE DEPARTMENT CONNECTION SHALL BE NO MORE THAN 100 FEET FROM AVAILABLE FIRE DEPARTMENT VEHICLE ACCESS ROADWAYS. A HYDRANT SHALL BE LOCATED ALONG THE ACCESS ROADWAY WITHIN 150 FEET OF THE LOCATION(S) THAT THE FDC CAN BE ACCESSED FROM. CFC 1413
29. FIRE HYDRANT LOCATIONS SHALL BE IDENTIFIED BY THE INSTALLATION OF FIRE DEPARTMENT APPROVED REFLECTIVE MARKERS.

ALARM AND MONITORING SYSTEMS

30. A FIRE ALARM SYSTEM (INCLUDING AUDIBLE AND VISUAL ALARMS) SHALL BE PROVIDED IN COMPLIANCE WITH CBC/CFC 907 AND 2010 NFPA 72. A SEPARATE PLAN SUBMITTAL IS REQUIRED FOR APPROVAL PRIOR TO INSTALLATION OR MODIFICATION.
31. AUTOMATIC FIRE SPRINKLER SYSTEM(S) AND ALL CONTROL VALVES, WITH THE EXCEPTION OF THOSE LISTED IN CFC 903.4, SHALL BE MONITORED BY A UL LISTED CENTRAL ALARM STATION.
32. WHEN SPRINKLER OR FIRE ALARMS ARE PROVIDED, APPROVED NOTIFICATION APPLIANCES FOR THE HEARING IMPAIRED SHALL BE INSTALLED IN ACCORDANCE WITH NATIONAL STANDARDS IN THE FOLLOWING AREAS:
    a. RESTROOMS, CORRIDORS, MULTIPURPOSE ROOMS
    b. OCCUPIED ROOMS WHERE AMBIENT NOISE IMPAIRS HEARING OF THE FIRE ALARM
    c. LOBBIES; MEETING ROOMS; ANY OTHER AREA FOR COMMON USE. SECTION 4-5.5 (CBC 1114B.1.1)
32.

OTHER REQUIREMENTS

33. STORAGE, DISPENSING, OR USE OF ANY HAZARDOUS MATERIALS SHALL COMPLY WITH CBC 414 AND CFC REGULATIONS. THE STORAGE AND USE OF HAZARDOUS MATERIALS SHALL BE REVIEWED AND APPROVED BY THE FIRE DEPARTMENT PRIOR TO SUCH MATERIALS BEING BROUGHT ON SITE. APPROPRIATE HAZARDOUS MATERIALS WARNING SIGNS SHALL BE PROMINENTLY PLACED IN THE VICINITY/ENTRANCES TO AREAS WHERE HAZARDOUS MATERIALS ARE STORED IN QUANTITIES SUFFICIENT TO REQUIRE A CFC PERMIT.

Landscape Notes / General

1. PER CALIFORNIA COASTAL COMMISSION CONDITIONS OF APPROVAL, NO NEW SITE LANDSCAPE IS TO BE ADDED.

1A. SEE 1 GALLON PLANTS AT FLOW THROUGH STORM WATER PLANTERS PER KEYNOTE 65 ON SHEET A1.1

2. CONTRACTOR IS RESPONSIBLE TO PATCH AND REPAIR ALL IMPACTS TO PLANTING AREAS DUE TO INSTALLATION OR DEMOLITION OF WORK AS DEPICTED ON THESE DRAWINGS TO INCLUDE REPAIR AND REPLACE IRRIGATION HEADS AND LATERALS AND TO REPLACE EXISTING PLANTING WITH LIKE SIZE AND KIND, TURF, AND SHRUBS.

CONSTRUCTION NOTES:

1. UNLESS SPECIFIED OTHERWISE CONSTRUCTION AND LAYOUT WORK INCLUDES, BUT IS NOT LIMITED TO THE LOCATION, PLACEMENT AND DETAILING OF ALL PAVING.
2. DIMENSIONS INDICATED ON PLANS SHALL PREVAIL OVER PLAN SCALE. DIMENSIONS ARE TO FACES OF, AND PERPENDICULAR FACE OF BUILDING WALLS UNLESS SHOWN OTHERWISE. ALL ANGLES AND CONNECTIONS ARE (90) DEGREES UNLESS NOTED OTHERWISE. WALKS CONNECTING DOORS ARE TO BE ALIGNED WITH FACE OF BUILDING UNLESS NOTED OTHERWISE.
3. ALL COORDINATE POINTS AND DIMENSIONS ARE TAKEN FROM THE BACK OF CURB UNLESS NOTED OTHERWISE.
4. LAYOUT POINTS OF ALL RADIUS SHALL BE CONNECTED BY SMOOTH EVEN LINES TO CREATE THE CURVED CONFIGURATION AS SHOWN ON THE PLANS..
5. NO DEVIATIONS FROM PLANS SHALL OCCUR WITHOUT APPROVAL OF THE ARCHITECT.
6. ANY PROPOSED WORK THAT IS INCONSISTENT WITH COMMON, SAFE CONSTRUCTION PRACTICES SHALL BE BROUGHT TO THE ATTENTION OF THE OWNER'S REPRESENTATIVE PRIOR TO COMMENCING WITH CONSTRUCTION .
7. CONTRACTOR SHALL VISIT SITE AND VERIFY ALL FIELD CONDITIONS PRIOR TO BEGINNING CONSTRUCTION.
8. CONTRACTOR SHALL REVIEW PLANS AND DETAILS TO ASCERTAIN LOCATIONS NECESSARY TO PROVIDE ELECTRICAL CONNECTIONS TO POWER IRRIGATION, LIGHTING, ETC.
9. CONTRACTOR SHALL DETERMINE THE LOCATION OF DEPTH OF ALL SITE UTILITIES PRIOR TO CONSTRUCTION. NOTIFY OWNERS REPRESENTATIVE OF ANY DISCREPANCIES IMMEDIATELY.
10. CONTRACTOR SHALL SECURE ALL PERMITS AND PAY ALL APPLICABLE FEES TO CONSTRUCT THE PLANS HEREIN .
11. THE CONTRACTOR SHALL HAVE CITY INSPECTOR OR ARCHITECT VERIFY ALL CONSTRUCTION STAKING LOCATIONS PRIOR TO INSTALLATION OF PAVING.
12. THE CONTRACTOR SHALL PROVIDE ALL CONSTRUCTION STAKING AND RE-STAKING REQUIRED TO COMPLETE THE PROJECT.
13. ALL HARDWARE SUCH AS NAILS, BOLTS, FASTENERS ETC., SHALL BE HOT DIPPED GALVANIZED UNLESS NOTED OTHERWISE.
14. CONTRACTOR SHALL COORDINATE ALL WORK WITH OTHER TRADES AS NECESSARY .
15. CONTRACTOR SHALL BE RESPONSIBLE FOR DAILY CLEANUP OF THE SITE AND PROVIDING ADEQUATE SAFETY MEASURES DURING CONSTRUCTION ON A 24 HOUR BASIS.
16. ANY CREDITS AND/OR DEBITS SHALL BE REPORTED TO OWNER AT TIME OF OCCURRENCE FOR PROPER VERIFICATION AND/OR APPROVAL PRIOR TO COMMENCEMENT OF RESULTING ACTION.
17. CONTRACTOR SHALL PROVIDE A 24 HOUR PHONE NUMBER AVAILABLE IN CASE OF EMERGENCY .

PLANTING NOTES:

1. CONTRACTOR SHALL NOTIFY OWNER'S REPRESENTATIVE OF ANY DISCREPANCIES IN THE EXISTING CONDITIONS OR WITHIN THE PLANS PRIOR TO BEGINNING WORK.
2. FINISHED GRADES SHALL BE SMOOTHED TO ELIMINATE PUDDLING OR STANDING WATER, CONTRACTOR SHALL MAINTAIN A MINIMUM 2% DRAINAGE AWAY FROM BUILDINGS AND PAVING INTO DRAINAGE STRUCTURES OR TO STREET. CONTRACTOR SHALL NOTIFY OWNERS'S REPRESENTATIVE IMMEDIATELY OF ANY CONFLICTS IN MAINTAINING DRAINAGE..
3. OWNER'S REPRESENTATIVE SHALL APPROVE ALL FINISH GRADING PRIOR TO PLACEMENT OF ANY PLANT MATERIAL..
4. CONTRACTOR SHALL NOTIFY OWNER'S REPRESENTATIVE FOR REPAIR OBSERVATION AT THE FOLLOWING TIMES:
    - MAINLINE: PRIOR TO BACKFILL AND PRESSURE TEST
    - LATERAL LINES: PRIOR TO BACKFILL
    - CONTROL WIRES: PRIOR TO BACKFILL
    - TREE LOCATIONS: PRIOR TO PLANTING
    - IRRIGATION COVERAGE: PRIOR TO PLANT PLACEMENT
    - PLANT APPROVAL AND SPOTTING PRIOR TO PLANTING
    - PRE-MAINTENANCE APPROVAL
    - POST-MAINTENACNE/FINAL APPROVAL
5. SOIL AMENDMENTS PER INDUSTRY STANDARDS AND EXISTING SOIL CONDITIONS ARE PROVIDED FOR BIDDING.
6. PRIOR TO BEGINNING THE PLANTING OPERATION, IRRIGATE ALL PLANTING AREAS NORMALLY FOR TWO WEEKS TO GERMINATE WEEDS. APPLY CONTACT HERBICIDE TO WEEDS ONLY PER MANUFACTURER, MONSANTO "ROUND-UP" OR EQUAL. REPEAT PROCESS IF WEEDS PERSIST.
7. PRIOR TO PLANTING REPAIR, IRRIGATION SYSTEM SHALL BE FULLY OPERATIONAL AND ALL PLANTING AREAS SHALL BE THOROUGHLY WATERED.
8. PLANT MATERIAL MAY BE REJECTED AT ANY TIME BY OWNER'S REPRESENTATIVE DUE TO CONDITION, FORM OR DAMAGE BEFORE OR AFTER PLANTING.
9. PLANTING TABLETS SHALL BE GRO-POWER PLANTING TABLETS 12-8-8 (12 MONTH SLOW RELEASE FORMULATION).
10. ALL PLANTING BEDS SHALL HAVE 2" (TWO INCH) THICK MULCH LAYER, "MULCH" SHALL BE BARK MULCH FROM ONE OF THE FOLLOWING SOURCES: SHREDDED FIR OR SHREDDED CEDAR. MULCH SHOULD BE FREE OF STICKS, STONES, CLAY OR OTHER FOREIGN MATERIAL / OR "EARTHWISE-ECO MULCH". EXISTING MULCH ON SITE MAY BE MIXED WITH NEW MULCH. CONTRACTOR SHALL SUBMIT SAMPLE TO OWNER'S REPRESENTATIVE FOR APPROVAL PRIOR TO INSTALLATION.
11. ALL PLANTING SHALL BE GUARANTEED THROUGH THE ESTABLISHMENT PERIOD (SEE PLANTING SPECIFICATIONS). ESTABLISHMENT PERIOD SHALL BE 90 DAYS. TREES AND SHRUBS SHALL BE GUARANTEED FOR A PERIOD OF ONE YEAR, BEGINNING FROM THE DATE OF THE FINAL ACCEPTANCE OF THE ESTABLISHMENT PERIOD.
12. AT COMPLETION OF THE ESTABLISHMENT PERIOD, APPLY COMMERCIAL FERTILIZER (15-15-15) AT 2 LBS/1000 SF. TO TURF AREAS ONLY AND WATER IMMEDIATELY WITH A THOROUGH IRRIGATION CYCLE.
13. CONTRACTOR IS RESPONSIBLE FOR MAINTAINING ALL REPAIR AREAS IN A WEED AND DEBRIS-FREE CONDITION THROUGHOUT THE ESTABLISHMENT PERIOD.
14. PROVIDE 90 DAY MAINTENANCE OF ENTIRE REPAIR AREA INDICATED BY THE LIMIT OF WORK LINE. FIRE EXTINGUISHERS
15. CONTRACTOR SHALL COORDINATE WITH THE OWNER REPRESENTATIVE PRUNED BY THE CONTRACTOR PRIOR TO COMMENCING WITH TRENCHING OPERATIONS WHERE REQUIRED.
16. CONTRACTOR WILL PROVIDE BUTLERS MILL SPORTS FIELD MIX GRASS SEED AND BUTLERS MILL GROMEX SEED TOPDRESS FOR ALL EXISTING TURF AREAS DAMAGED FROM TRENCHING OPERATIONS.

IRRIGATION NOTES:

1. THE IRRIGATION SYSTEM IS EXISTING OPERATIONAL AND SHALL BE REPAIRED TO THE SAME OPERATIONAL STANDARDS..
2. THE IRRIGATION SYSTEM IS EXISTING. LOCATE ALL PIPING, VALVES, BACKFLOW PREVENTERS, AND OTHER IRRIGATION EQUIPMENT WITHIN PLANTING AREAS UNLESS NOTED OR DIRECTED OTHERWISE. LOCATE ALL VALVES AND VALVE BOX SIX INCHES FROM EDGE OF PAVING OR CURB..
3. EXISTING UTILITES AND FIELD CONDITIONS: PRIOR TO EXCAVATION, LOCATE ALL CABLES, CONDUITES, AND UNDERGROUND UTILITIES. CONTRACTOR SHALL BE RESPONSIBLE FO AN UNDERGROUND UTILITY SERVICE TO LOCATE AND MARK UTILITIES. CONTRACTOR WILL TAKE PROPER PRECAUTIONS NOT TO DAMAGE OR DISTRURB SUCH UNDERGROUND IMPROVEMENTS. NOTIFY THE OWNER'S REPRESENTATIVE IMMEDIATELY IF A CONFLICT EXISTS BETWEEN SUCH OBSTACLES AND THE PROPOSED WORK. PROCEED IN SAME MANNER IF ROCK LAYERS OR ANY OTHER CONDITIONS ENCOUNTERED UNDERGROUND MAKE CHANGES ADVISABLE.
4. ALL PIPING AND WIRING UNDER ROADWAYS AND PAVING AND THROUGH WALLS SHALL BE SLEEVED..
5. USE TWO WRAPS OF THREE-QUARTER INCH (3/4") TEFLON TAPE FOR ALL THREADED VALVE CONNECTIONS..
6. PROVIDE PULL BOXES FOR CONTROL WIRING LOCATED UNDER PAVING ALL CHANGES IN DIRECTION GREATER THAN FORTY-FIVE (45) DEGREES AND WHERE WIRE RUNS EXCEED TWO HUNDRED FEET (200') IN LENGTH. WIRE SPLICES SHALL BE MADE IN PULL BOXES OR CONTROL VALVE BOXES ONLY.
7. THE CONTRACTOR SHALL BE RESPONSIBLE FOR CONNECTION OF FIELD WIRES TO APPROPRIATE TERMINAL STRIPS. (DO NOT CONNECT FLOW SENSORS AND MASTER VALVE WIRES TO CONTROLLER).
8. ADJUST ALL REPLACED SPRINKLERS TO AVOID OVER SPRAY ONTO WALLS, WALKS, STREETS, UTILITY BOXES, BUILDINGS AND OTHER IMPROVEMENTS.
9. WHERE TRENCHING NEAR TREE ROOTS, TAKE EXTREME CAUTION, NOTIFY INSPECTOR WHEN TRENCHING OPERATIONS HAVE SEVERED TREE ROOTS GREATER THAN THREE INCHES IN DIAMETER.
10. ALL SPRINKLER HEADS SHALL BE SET PERPENDICULAR TO THE FINISH GRADE OF THE AREA TO BE IRRIGATED UNLESS NOTED OTHERWISE ON THE PLANS .
11. CONTRACTOR SHALL INSTALL IN-LINE ANTI-DRAIN VALVES AS WARRANTED BY THE SITE CONDITIONS TO ALLEVIATE LOW HEAD DRAINAGE.
12. THE CONTRACTOR SHALL NOT WILLFULLY INSTALL THE SPRINKLER SYSTEM AS SHOWN ON THE DRAWINGS WHEN IT IS OBVIOUS IN THE FIELD THAT OBSTRUCTIONS, GRADE DIFFERENCES OR DIFFERENCES IN AREA DIMENSIONS ARE FOUND. SUCH OBSTRUCTIONS OR DIFFERENCES SHALL BE BROUGHT TO THE ATTENTION OF THE REPRESENTATIVE. IN THE EVENT THIS NOTIFICATION IS NOT PERFORMED, THE CONTRACTOR SHALL BE RESPONSIBLE FOR ANY REVISIONS NECESSARY.
13. THE CONTRACTOR SHALL KEEP AN UP-TO-DATE COMPLETE "AS-BUILT" RECORD SET OF PRINTS WHICH SHALL BE UPDATED DAILY AND SHOW EVERY CHANGE FROM THE ORIGINAL DESIGN. ALL WORK SHALL BE NEAT AND LEGIBLE.
14. INSTALL IRRIGATION HEADS IN TURF AREAS 1" FROM WALKS AND HARDSCAPE AREAS.
15. LATERAL LINE END RUNS SHALL BE 3/4" UNLESS NOTED OTHERWISE.
16. ALL CONTROL VALVES SHALL BE MANIFOLD AND GROUPED IN GENERAL AREAS SHOWN ON PLAN. VALVES SHALL BE LOCATED IN PLANTING AREAS AND IMMEDIATELY ADJACENT TO WALKS, CURBS, OR PAVING AREAS AND SET AT RIGHT ANGLES TO EDGES. INSTALL VALVE BOXES 6" FROM EDGES OF HARDSCAPE AREAS.
17. IRRIGATION LINES SHALL BE INSTALLED IN PLNTING AREAS WHERE EVER FEASBILE AND WITHIN 12" OF PLANTING AREA EDGES UNLESS SHOWN OTHERWISE.
18. CONTRACTOR SHALL REMOVE AND DISCARD DAILY, ALL PIPING DISTURBED DURING TRENCHING OPERATION.
19. PROVIDE PULL BOXES FOR FLOW SENSING AND MASTER VALVE CABLE AT ALL CHANGES GREATER THAN FORY-FIVE (45) DEGREES AND WHERE CABLE RUNS EXCEED TWO HUNDRED FEET (200') IN LENGTH. INSTALL SEPARATE FLOW SENSING CABLE AND MASTER VALVE CABLE IN THE SAME ONE AND A QUARTER INCH (1-1/4") CONDUIT. NO SPLICES WILL BE ALLOWED IN FLOW SENSOR AND MASTER VALVE CABLE.
20. ALL BOLTS FOR LOCKING VALVE BOX LIDS SHALL BE STAINLESS STEEL.
21. CONTRACTOR WILL BE RESPONSIBLE FOR ANY CITY BUILDING PERMITS OR ENCROACHMENT EASEMENT PERMITS NECESSARY FOR WORK.
22. CONTRACTOR SHALL REMOVE ALL EXISTING IRRIGATION HEADS AND AUTOMATIC OR MANUAL VALVES PRIOR TO, DURING, OR AFTER INSTALLATION OF NEW WORK SHOWN ON THESE PLANS.
23. CONTRACTOR SHALL CONTACT INSPECTOR PRIOR TO ANY TRENCHING OPERATIONS. INSPECTOR AND CONTRACTOR TO DISCUSS TRENCHING OPERATIONS AROUND TREES AND PLANT MATERIAL TRIMMING REQUIREMENTS.
24. CONTRACTOR WILL PROVIDE TEMPORARY IIRGATIONI SYSTEM, OR HAND-WATER EXSITING LANDSCAPE AREAS DURING CONSTRUCTION PERIOD. WATERING SHALL BE PERFORMED AT A TIME AS TO NOT INTERFERE WITH NORMAL ACTIVITIES. OWNER'S REPRESENTATIVE SHALL BE RESPONSIBLE FOR DTERMINING IRRIGATION NEEDS AND SCHDULING.
25. CONTRACTOR SHALL BACKFILL AND COMPACT TRENCHES. TOP 4" OF TRENCH BACKFILL IN EXISTING TURF AREAS SHALL BE AMENDED WITH TOPSOIL. GRADE TRENCH LINES TO MATCH GRADE WITH SURROUNDING PLANTING AREAS. CONTRACTOR SHALL HAVE TRENCH LINES GRADED IN A CONDITION READY FOR SEEDING OR SODDING.

South Mission Beach Lifeguard Station
700 N. Jetty Road

G-2

Dominy + Associates Architects @ domusstudio
2150 West Washington, Suite 303
San Diego, California 92110

Tel 619.692.9393
Fax 619.692.9394
domusstudio.com

SPEC. NO. 8147

LICENSED ARCHITECT
WAYNE HOLTAN
No. C12113
REN 9.30.15
STATE OF CALIFORNIA

PLANS FOR THE CONSTRUCTION OF

South Mission Beach Lifeguard Station

General Notes	T2.0

CITY OF SAN DIEGO, CALIFORNIA
ENGINEERING & CAPITAL PROJECTS
ARCHITECTURAL ENGINEERING & CONTRACTS DIVISION
SHEET 02 OF 94 SHEETS

WBS S-00791

APPROVED: [signature] FOR CITY ENGINEER — 10/13/2014 DATE

SUBMITTED BY: JIHAD SLEIMAN, PROJECT MANAGER

DESCRIPTION	BY	APPROVED	DATE	FILMED
ORIGINAL	WH/TT			

YOUSIF BENYAMIN
PROJECT ENGINEER
218–1693
CCS27 COORDINATES
1858–6253
CCS83 COORDINATES

CONTRACTOR ______ DATE STARTED ______
INSPECTOR ______ DATE COMPLETED ______

32849–02–D

Proprietary design. These drawings and design are protected by common law copyright. All patentable material contained herein and originating with Dominy + Associates Architects @ domusstudio LLP shall be the property of Dominy + Associates Architects @ domusstudio LLP

COPYRIGHT October 13, 2014 at 8:30AM

EXISTING TOPOGRAPHY / SURVEY
1"= 40'

NOTE: THE EXISTING PARKING LOT INCLUDES (270) STANDARD SPACES AND (4) ACCESSIBLE SPACES. TOTAL EXISTING PARKING IS (274).

G-3

Dominy + Associates Architects @ domusstudio
2150 West Washington, Suite 303
San Diego, California 92110
Tel 619.692.9393
Fax 619.692.9394
domusstudio.com

SPEC. NO. 8147

LICENSED ARCHITECT WAYNE POLTAK No. C12113 REN 9.30.15 STATE OF CALIFORNIA

PLANS FOR THE CONSTRUCTION OF
South Mission Beach Lifeguard Station

Existing Topo and Survey | T3.0

CITY OF SAN DIEGO, CALIFORNIA
ENGINEERING & CAPITAL PROJECTS
ARCHITECTURAL ENGINEERING & CONTRACTS DIVISION
SHEET 03 OF 94 SHEETS

WBS S-00791

APPROVED: FOR CITY ENGINEER — DATE 10/13/2014

SUBMITTED BY: JIHAD SLEIMAN, PROJECT MANAGER

DESCRIPTION	BY	APPROVED	DATE	FILMED
ORIGINAL	WH/TT			

YOUSIF BENYAMIN, PROJECT ENGINEER
218-1693
CCS27 COORDINATES
1858-6253
CCS83 COORDINATES

CONTRACTOR _____ DATE STARTED _____
INSPECTOR _____ DATE COMPLETED _____

32849-03-D

Proprietary design. These drawings and design are protected by common law copyright. All patentable material contained herein and originating with Dommy + Associates Architects @ domusstudio LLP shall be the property of Dommy + Associates Architects @ domusstudio LLP

RECORDING REQUESTED BY
CITY OF SAN DIEGO
DEVELOPMENT SERVICES
PERMIT INTAKE, MAIL STATION 501

WHEN RECORDED MAIL TO
PERMIT INTAKE
MAIL STATION 501

THE ORIGINAL OF THIS DOCUMENT WAS RECORDED ON MAY 13, 2011
DOCUMENT NUMBER 2011-0249841
Ernest J. Dronenburg, Jr., COUNTY RECORDER
SAN DIEGO COUNTY RECORDER'S OFFICE
TIME: 11:14 AM

SPACE ABOVE THIS LINE FOR RECORDER'S USE

JOB ORDER NUMBER: 335040

Site Development Permit No. 197971
South Mission Beach Lifeguard Station
Hearing Officer

This Site Development Permit No. 197971 is granted by the Hearing Officer of the City of San Diego to the Engineering and Capital Projects Department, of the City of San Diego Owner/Permittee, pursuant to San Diego Municipal Code [SDMC] section 143.0110. The 9.79-acre site is located at the south end of South Mission Beach and just north of the North Jetty in the Mission Beach Precise District in the R-S, R-2B and R-2 zones of the Mission Beach Precise Plan. The project site is legally described as Block No. 6801, Mission Beach, Map No. 1809.

Subject to the terms and conditions set forth in this Permit, permission is granted to Owner/Permittee to demolish the existing South Mission Beach Lifeguard Station and construct a replacement 3,125 square-foot lifeguard station with third-story observation tower, first aid room, a reception area, ground-level enclosed parking/storage for safety vehicles and equipment, and restrooms as described and identified by size, dimension, quantity, type, and location on the approved exhibits, dated September 27, 2006, on file in the Development Services Department.

The project or facility shall include:

a. Demolition of an existing South Mission Beach Lifeguard Station, construction of a replacement 3,125 square-foot lifeguard station with third-story observation tower, first aid room, a reception area, ground-level enclosed parking/storage for safety vehicles and equipment, and restrooms.

b. Landscaping (planting, irrigation and landscape related improvements).

c. Accessory improvements determined by the City Manager to be consistent with the land use and development standards in effect for this site per the adopted community plan, California Environmental Quality Act Guidelines, public and private improvement

requirements of the City Engineer, the underlying zone(s), conditions of this Permit, and any other applicable regulations of the SDMC in effect for this site.

STANDARD REQUIREMENTS:

1. Construction, grading or demolition must commence and be pursued in a diligent manner within thirty-six months after the effective date of final approval by the City, following all appeals. Failure to utilize the permit within thirty-six months will automatically void the permit unless an Extension of Time has been granted. Any such Extension of Time must meet all the SDMC requirements and applicable guidelines in effect at the time the extension is considered by the appropriate decision maker.

2. No permit for the construction, occupancy or operation of any facility or improvement described herein shall be granted, nor shall any activity authorized by this Permit be conducted on the premises until:

a. The Permittee signs and returns the Permit to the Development Services Department; and

b. The Permit is recorded in the Office of the San Diego County Recorder.

3. Unless this Permit has been revoked by the City of San Diego the property included by reference within this Permit shall be used only for the purposes and under the terms and conditions set forth in this Permit unless otherwise authorized by the City Manager.

4. This Permit is a covenant running with the subject property and shall be binding upon the Permittee and any successor or successors, and the interests of any successor shall be subject to each and every condition set out in this Permit and all referenced documents.

5. The utilization and continued use of this Permit shall be subject to the regulations of this and any other applicable governmental agency.

6. Issuance of this Permit by the City of San Diego does not authorize the Permittee for this permit to violate any Federal, State or City laws, ordinances, regulations or policies including, but not limited to, the Endangered Species Act of 1973 [ESA] and any amendments thereto (16 U.S.C. § 1531 et seq.).

7. The Owner/Permittee shall secure all necessary building permits. The applicant is informed that to secure these permits, substantial modifications to the building and site improvements to comply with applicable building, fire, mechanical and plumbing codes and State law requiring access for disabled people may be required.

8. Before issuance of any building or grading permits, complete grading and working drawings shall be submitted to the City Manager for approval. Plans shall be in substantial conformity to Exhibit "A," on file in the Development Services Department. No changes,

modifications or alterations shall be made unless appropriate application(s) or amendment(s) to this Permit have been granted.

9. All of the conditions contained in this Permit have been considered and have been determined to be necessary in order to make the findings required for this Permit. It is the intent of the City that the holder of this Permit be required to comply with each and every condition in order to be afforded the special rights which the holder of the Permit is entitled as a result of obtaining this Permit.

10. In the event that any condition of this Permit, on a legal challenge by the Owner/Permittee of this Permit, is found or held by a court of competent jurisdiction to be invalid, unenforceable, or unreasonable, this Permit shall be void. However, in such an event, the Owner/Permittee shall have the right, by paying applicable processing fees, to bring a request for a new permit without the "invalid" condition(s) back to the discretionary body which approved the Permit for a determination by that body as to whether all of the findings necessary for the issuance of the proposed permit can still be made in the absence of the "invalid" condition(s). Such hearing shall be a hearing de novo and the discretionary body shall have the absolute right to approve, disapprove, or modify the proposed permit and the condition(s) contained therein.

LANDSCAPE REQUIREMENTS:

11. In the event that the Landscape Plan and the Site Plan conflict, the Site Plan shall be revised to be consistent with the Landscape Plan such that landscape areas are consistent with the Exhibit "A," Landscape Development Plan.

12. No change, modification, or alteration shall be made to the project unless appropriate application or amendment of this Permit shall have been granted by the City.

13. Prior to issuance of any construction permits for structures (including shell), complete landscape and irrigation construction documents consistent with the Landscape Standards (including planting and irrigation plans, details and specifications) shall be submitted to the City Manager for approval. The construction documents shall be in substantial conformance with Exhibit "A," Landscape Development Plan, on file in the Office of Development Services.

14. Prior to final inspection, it shall be the responsibility of the Permittee or subsequent Owner to install all required landscape and obtain all required landscape inspections. The permittee or subsequent Owner will maintain all required landscape improvements, on a permanent basis, in accordance with the Land Development Code and Landscape Standards.

15. All required landscape shall be maintained in a disease, weed, and litter free condition at all times. Severe pruning or "topping" of trees is not permitted. The trees shall be maintained in a safe manner to allow each tree to grow to its mature height and spread.

16. If any required landscape (including existing or new plantings, hardscape, landscape features, etc.) indicated on the approved construction document plans is damaged or removed during demolition or construction, it shall be repaired and/or replaced in kind and equivalent size

per the approved documents to the satisfaction of the City Manager within 30 days of damage or Certificate of Occupancy.

17. Invasive species are prohibited from being planted adjacent to any, water course, wet land or native habitats within the city limits of San Diego. Invasive plants are those which rapidly self propagate by air born seeds or trailing as noted in section 1.3 of the Landscape Standards.

PLANNING/DESIGN REQUIREMENTS:

18. There shall be compliance with the regulations of the underlying zone(s) unless a deviation or variance to a specific regulation(s) is approved or granted as a condition of approval of this Permit. Where there is a conflict between a condition (including exhibits) of this Permit and a regulation of the underlying zone, the regulation shall prevail unless the condition provides for a deviation or variance from the regulations. Where a condition (including exhibits) of this Permit establishes a provision which is more restrictive than the corresponding regulation of the underlying zone, then the condition shall prevail.

19. The height(s) of the building(s) or structure(s) shall not exceed those heights set forth in the conditions and the exhibits (including, but not limited to, elevations and cross sections) or the maximum permitted building height of the underlying zone, whichever is lower, unless a deviation or variance to the height limit has been granted as a specific condition of this Permit.

20. A topographical survey conforming to the provisions of the SDMC may be required if it is determined, during construction, that there may be a conflict between the building(s) under construction and a condition of this Permit or a regulation of the underlying zone. The cost of any such survey shall be borne by the Permittee.

21. Any future requested amendment to this Permit shall be reviewed for compliance with the regulations of the underlying zone(s) which are in effect on the date of the submittal of the requested amendment.

22. All private outdoor lighting shall be shaded and adjusted to fall on the same premises where such lights are located and in accordance with the applicable regulations in the SDMC.

23. The use of textured or enhanced paving shall meet applicable City standards as to location, noise and friction values.

24. The subject property and associated common areas on site shall be maintained in a neat and orderly fashion at all times.

WATER REQUIREMENTS:

25. Prior to the issuance of any building permits, the Owner/Permittee shall apply for a plumbing permit for the installation of appropriate private back flow prevention device(s) on each water service (domestic, fire, and irrigation), in a manner satisfactory to the Water

Department Director, the City Engineer, and the Cross Connection Supervisor in the Customer Support Division of the Water Department.

26. Prior to the issuance of any certificates of occupancy, public water facilities necessary to serve the development, including services, shall be complete and operational in a manner satisfactory to the Water Department Director and the City Engineer.

27. The Owner/Permittee agrees to design and construct all proposed public water facilities in accordance with established criteria in the most current edition of the City of San Diego Water Facility Design Guidelines and City regulations, standards and practices pertaining thereto. Public water facilities shall be modified at final engineering to comply with standards.

WASTEWATER REQUIREMENTS:

28. All proposed sewer facilities will be privately maintained by the Park and Recreation Department.

29. No structures or landscaping that would inhibit access shall be installed in or over any public sewer main or its access easement.

30. No trees or shrubs exceeding three feet in height at maturity shall be located within ten feet of any public sewer facilities.

31. The developer shall design and construct any proposed public sewer facilities to the most current edition of the City of San Diego's Sewer Design Guide.

32. Proposed private underground sewer facilities shall be designed to meet the requirements of the California Uniform Plumbing Code and shall be reviewed as part of the building permit plan check.

INFORMATION ONLY:

Any party, on whom fees, dedications, reservations, or other exactions have been imposed as conditions of approval of this development permit, may protest the imposition within ninety days of the approval of this development permit by filing a written protest with the City Clerk pursuant to California Government Code section 66020.

APPROVED by the Hearing Officer of the City of San Diego on September 27, 2006.

Permit Type/PTS Approval No.: Site Development Permit No. 197971
Date of Approval: September 27, 2006

AUTHENTICATED BY THE CITY OF SAN DIEGO DEVELOPMENT SERVICES DEPARTMENT

Patricia Grabski
Development Project Manager

NOTE: Notary acknowledgment must be attached per Civil Code section 1189 et seq.

The undersigned Owner/Permittee, by execution hereof, agrees to each and every condition of this Permit and promises to perform each and every obligation of Owner/Permittee hereunder.

Engineering and Capital Projects Department
Owner/Permittee

By J. C. Sleiman.
Jihad Sleiman
Project Manager

NOTE: Notary acknowledgments must be attached per Civil Code section 1189 et seq.

CALIFORNIA ALL-PURPOSE ACKNOWLEDGMENT

State of California
County of San Diego }
On May 10, 2011 before me, Stacie L. Maxwell, Notary Public
(Here Insert Name and Title of the Officer)
personally appeared Patricia Grabski
(Name(s) of Signer(s))

who proved to me on the basis of satisfactory evidence to be the person(s) whose name(s) is/are subscribed to the within instrument and acknowledged to me that he/she/they executed the same in his/her/their authorized capacity(ies), and that by his/her/their signature(s) on the instrument the person(s), or the entity upon behalf of which the person(s) acted, executed the instrument.

I certify under PENALTY OF PERJURY under the laws of the State of California that the foregoing paragraph is true and correct.

WITNESS my hand and official seal.

Signature Patricia Grabski
Signature of Notary Public

STACIE L. MAXWELL
Commission # 1810493
Notary Public - California
San Diego County
My Comm. Expires Aug 22, 2012

Place Notary Seal Above

OPTIONAL

Though the information below is not required by law, it may prove valuable to persons relying on the document and could prevent fraudulent removal and reattachment of this form to another document.

Description of Attached Document
Title or Type of Document: South Mission Beach Lifeguard Station PTS 19
Document Date: _____ Number of Pages: _____
Signer(s) Other Than Named Above: _____

Capacity(ies) Claimed by Signer(s)

Signer's Name: _____
☐ Individual
☐ Corporate Officer — Title(s): _____
☐ Partner — ☐ Limited ☐ General
☐ Attorney in Fact
☐ Trustee
☐ Guardian or Conservator
☐ Other: _____
Signer Is Representing: _____
RIGHT THUMBPRINT OF SIGNER — Top of thumb here

Signer's Name: _____
☐ Individual
☐ Corporate Officer — Title(s): _____
☐ Partner — ☐ Limited ☐ General
☐ Attorney in Fact
☐ Trustee
☐ Guardian or Conservator
☐ Other: _____
Signer Is Representing: _____
RIGHT THUMBPRINT OF SIGNER — Top of thumb here

© 2007 National Notary Association • 9350 De Soto Ave., P.O. Box 2402 • Chatsworth, CA 91313-2402 • www.NationalNotary.org Item #5907 Reorder: Call Toll-Free 1-800-876-6827

CALIFORNIA ALL-PURPOSE ACKNOWLEDGMENT

State of California
County of San Diego }
On May 10, 2011 before me, Stacie L. Maxwell, Notary Public
(Here Insert Name and Title of the Officer)
personally appeared Jihad Sleiman
(Name(s) of Signer(s))

who proved to me on the basis of satisfactory evidence to be the person(s) whose name(s) is/are subscribed to the within instrument and acknowledged to me that he/she/they executed the same in his/her/their authorized capacity(ies), and that by his/her/their signature(s) on the instrument the person(s), or the entity upon behalf of which the person(s) acted, executed the instrument.

I certify under PENALTY OF PERJURY under the laws of the State of California that the foregoing paragraph is true and correct.

WITNESS my hand and official seal.

Signature Stacie L. Maxwell
Signature of Notary Public

STACIE L. MAXWELL
Commission # 1810493
Notary Public - California
San Diego County
My Comm. Expires Aug 22, 2012

Place Notary Seal Above

OPTIONAL

Though the information below is not required by law, it may prove valuable to persons relying on the document and could prevent fraudulent removal and reattachment of this form to another document.

Description of Attached Document
Title or Type of Document: South Mission Beach Lifeguard Station
Document Date: _____ Number of Pages: _____
Signer(s) Other Than Named Above: _____

Capacity(ies) Claimed by Signer(s)

Signer's Name: _____
☐ Individual
☐ Corporate Officer — Title(s): _____
☐ Partner — ☐ Limited ☐ General
☐ Attorney in Fact
☐ Trustee
☐ Guardian or Conservator
☐ Other: _____
Signer Is Representing: _____
RIGHT THUMBPRINT OF SIGNER — Top of thumb here

Signer's Name: _____
☐ Individual
☐ Corporate Officer — Title(s): _____
☐ Partner — ☐ Limited ☐ General
☐ Attorney in Fact
☐ Trustee
☐ Guardian or Conservator
☐ Other: _____
Signer Is Representing: _____
RIGHT THUMBPRINT OF SIGNER — Top of thumb here

© 2007 National Notary Association • 9350 De Soto Ave., P.O. Box 2402 • Chatsworth, CA 91313-2402 • www.NationalNotary.org Item #5907 Reorder: Call Toll-Free 1-800-876-6827

HEARING OFFICER
RESOLUTION NO. 5944
SITE DEVELOPMENT PERMIT NO. 197971
SOUTH MISSION BEACH LIFEGUARD STATION

WHEREAS, THE ENGINEERING AND CAPITAL PROJECTS DEPARTMENT, Owner/Permittee, filed an application with the City of San Diego for a permit to demolish the existing South Mission Beach Lifeguard Station and construct a replacement 3,125 square-foot lifeguard station with third-story observation tower, first aid room, a reception area, ground-level enclosed parking/storage for safety vehicles and equipment, and restrooms (as described in and by reference to the approved Exhibits "A" and corresponding conditions of approval for the associated Permit No. 197971 on portions of a 9.79-acre site;

WHEREAS, the project site is located at 700, North Jetty Road in the R-S, R2B, and R2 Zones of the Mission Beach Community Plan Area;

WHEREAS, the project site is legally described as Block No. 6801, Mission Beach, Map No. 1809;

WHEREAS, on September 27, 2006, the Hearing Officer of the City of San Diego considered Site Development Permit No 197971, pursuant to the Land Development Code of the City of San Diego; NOW, THEREFORE,

BE IT RESOLVED by the Hearing Officer of the City of San Diego as follows:

That the Hearing Officer adopts the following written Findings, dated September 27, 2006.

FINDINGS:

Site Development Permit - Section 126.0504

A. Findings for all Site Development Permits

1. The proposed development will not adversely affect the applicable land use plan;

The project would demolish an existing lifeguard tower and construct a new lifeguard tower at South Mission Beach. The Mission Beach Precise Plan does not specify a land use designation for the project area. However, the Plan requires that open space be preserved and that views to and along the shoreline from public areas be protected from blockage by development and or vegetation. The proposed new lifeguard station would be a public safety accessory use supporting the beach open space and has been designed to minimize blockage of public views. The station would be constructed in an orientation perpendicular to the shoreline, and, therefore, would present its narrowest dimension to the public view areas to the east of the project site. As

the project would support the open space preservation called for in the Precise Plan and has been designed to minimize public view blockage, the proposal is consistent with the Precise Plan. Therefore, the proposed development will not adversely affect the applicable land use plan.

2. The proposed development will not be detrimental to the public health, safety, and welfare; and

The project would demolish an existing lifeguard tower and construct a new lifeguard tower at South Mission Beach. As its primary objective, a new, state-of-the-art lifeguard station fully supports and promotes the safety, health and welfare of the public. The project is an enhancement to the public welfare in that it would encourage increased public use of the beach and the resources provided by this coastal community. The project would improve beach accessibility and enhance the areas recreational opportunities. While providing improved safety to beachgoers, the project has been designed to minimize impacts to public views. The station would be constructed in an orientation perpendicular to the shoreline, and, therefore, would present its narrowest dimension to the public view areas to the east of the project site. The Negative Declaration prepared for this project evaluated the visual quality issue and concluded that the project would not have a significant impact to public views, and that no mitigation would be required.

The Negative Declaration also examined potential geologic hazards associated with the project and concluded that proper engineering design of all new structures would ensure that the potential for geologic impacts from regional hazards would not be significant, and that no mitigation would be required. Compliance with the City's Stormwater Regulation would be required during construction activities and would include silt fencing, the covering of all storm drain inlets with filter cloth and sand bags, and the placement of mud guards at the entrance to the construction site. As the proposal has addressed health, safety and welfare issues including visual, geologic and water quality aspects of the project, and concluded there are no significant impacts, the proposed development will enhance public health, safety and welfare.

3. The proposed development will comply with the applicable regulations of the Land Development Code.

The project would demolish an existing lifeguard tower and construct a new lifeguard tower at South Mission Beach. The project complies with the applicable Land Development Code regulations, including building heights, landscaping and parking requirements. The project has addressed all required water quality issues through the project review, describing the type of all pollutants which would be generated during post-construction and the pollutants to be captured and treated by the proposed Best Management Practices. The project would also comply with City's Stormwater Regulation. As the project would comply with building height, landscaping, parking and water quality requirements, the proposed lifeguard station would comply with the applicable regulations of the Land Development Code.

B. Supplemental Findings--Environmentally Sensitive Lands

1. The site is physically suitable for the design and siting of the proposed development and the development will result in minimum disturbance to environmentally sensitive lands;

The project would demolish an existing lifeguard tower and construct a new lifeguard tower at South Mission Beach. The site for the new construction is approximately 80 feet to the north of the existing lifeguard tower. The proposed site is immediately adjacent to an existing green recreation space and was selected to minimize any disturbance to the beach area. The site will require minimal grading and would allow for the perpendicular orientation to the beach, which would minimize impacts to public views. As the site would allow the new lifeguard station to be located near previously disturbed areas, and would allow the project to be oriented to preserve public views, the project is physically suitable for the design and siting of the proposed development and the development will result in minimum disturbance to enviromentally sensitive lands.

2. The proposed development will minimize the alteration of natural land forms and will not result in undue risk from geologic and erosional forces, flood hazards, or fire hazards;

The project would demolish an existing lifeguard tower and construct a new lifeguard tower at South Mission Beach. There are no prominent natural landforms near or on the proposed site. The project would minimally altering existing topography and drainage patterns since the existing site is relatively flat. Therefore, erosional forces and flood hazards would not be increased. Based on the nature of the proposed construction, no increase in fire hazard is anticipated. The project would implement permanent construction Best Management Practices as required by the City of San Diego. Because of the project's relatively small size and distance from the beach, additional erosion of the beach or impacts to the local shoreline sand supply is not anticipated. Geologic review determined that the project has adequately addressed geologic conditions potentially affecting the project. Through project review, staff has determined there would be no erosional forces, flood hazards or fire hazards. Therefore the proposed development would minimally alter the site would not result in undue risk from geologic and erosional forces, flood hazards, or fire hazards.

3. The proposed development will be sited and designed to prevent adverse impacts on any adjacent environmentally sensitive lands;

The project would demolish an existing lifeguard tower and construct a new lifeguard tower at South Mission Beach. The new lifeguard station would be constructed approximately 80 feet north of the existing tower and would be constructed slightly farther from the shoreline. The new station would be constructed in an orientation perpendicular to the shoreline, and, therefore, this design would present its narrowest dimension to the public view areas to the east of the project site. This would help preserve public views to the environmentally sensitive resource (coastal beaches). The project is also proposed to be located adjacent to the existing green space and

would be connected to the existing parking lot by an accessible pathway. In this way, the new lifeguard station would minimize any new disturbance to other coastal beach areas while improving safety and security. Therefore, the proposed development would be sited and designed to prevent adverse impacts on any adjacent environmentally sensitive lands.

4. The proposed development will be consistent with the City of San Diego's Multiple Species Conservation Program (MSCP) Subarea Plan;

The project would demolish an existing lifeguard tower and construct a new lifeguard tower at South Mission Beach. The project is not located in or near the Multiple Species Conservation Program (MSCP) Subarea. Therefore, the proposed development will be consistent with the City of San Diego's Multiple Species Conservation Program (MSCP) Subarea Plan.

5. The proposed development will not contribute to the erosion of public beaches or adversely impact local shoreline sand supply; and

The project would demolish an existing lifeguard tower and construct a new lifeguard tower at South Mission Beach. The project's direct run-off would be discharged to an existing storm drain located adjacent to the project site. Because of the project's relatively small size and distance from the beach, additional erosion of the beach or impacts to the local shoreline sand supply is not anticipated. The project would comply with current Best Management Practices during construction. As such, the development would reduce pollutants discharged from the project site to the maximum extent practicable. Therefore, the proposed development will not contribute to the erosion of public beaches or adversely impact local shoreline sand supply.

6. The nature and extent of mitigation required as a condition of the permit is reasonably related to, and calculated to alleviate, negative impacts created by the proposed development.

The project would demolish an existing lifeguard tower and construct a new lifeguard tower at South Mission Beach. No mitigation is required of this project. Therefore, the nature and extent of mitigation required as a condition of the permit is reasonably related to, and calculated to alleviate, negative impacts created by the proposed development.

BE IT FURTHER RESOLVED that, based on the findings hereinbefore adopted by the Hearing Officer, Site Development Permit No. 197971 is hereby GRANTED by the Hearing Officer to the referenced Owner/Permittee, in the form, exhibits, terms and conditions, as set forth in Permit No. 197971, a copy of which is attached hereto and made a part hereof.

Patricia Grabski
Development Project Manager
Development Services

Development Services

Adopted on: September 27, 2006

Job Order No. 335040

cc: Legislative Recorder, Planning Department

G-4

Domiy + Associates Architects @ domusstudio
2150 West Washington, Suite 303
San Diego, California 92110

Tel 619.692.9393
Fax 619.692.9394
domusstudio.com

SPEC. NO. 8147

LICENSED ARCHITECT
CHRISTINE POMEROY
No. C12113
REN 9.30.15
STATE OF CALIFORNIA

PLANS FOR THE CONSTRUCTION OF

South Mission Beach Lifeguard Station

Site Development Conditions

T4.0

CITY OF SAN DIEGO, CALIFORNIA
ENGINEERING & CAPITAL PROJECTS
ARCHITECTURAL ENGINEERING & CONTRACTS DIVISION
SHEET 04 OF 94 SHEETS

WBS S-00791

APPROVED: _____ FOR CITY ENGINEER
10/13/2014 DATE

SUBMITTED BY:
JIHAD SLEIMAN
PROJECT MANAGER

DESCRIPTION	BY	APPROVED	DATE	FILMED
ORIGINAL	WH/TT			

YOUSIF BENYAMIN
PROJECT ENGINEER

218-1693
CCS27 COORDINATES

1858-6253
CCS83 COORDINATES

CONTRACTOR _____ DATE STARTED _____
INSPECTOR _____ DATE COMPLETED _____

32849-04-D

© COPYRIGHT October 13, 2014 at 8:30AM

Proprietary design: These drawings and design are protected by common law copyright. All patentable material contained herein and originating with Dominy + Associates Architects @ domusstudio LLP shall be the property of Dominy + Associates Architects @ domusstudio LLP

CALIFORNIA COASTAL COMMISSION
San Diego Coast Area Office
7575 Metropolitan Drive, Suite 103
San Diego, CA 92108-4402
(619) 767-2370

Date: August 30, 2011
Permit Application No.: 6-11-044
Page: 1

NOTICE OF INTENT TO ISSUE PERMIT
(Upon satisfaction of special conditions)

THIS IS NOT A COASTAL DEVELOPMENT PERMIT

THE SOLE PURPOSE OF THIS NOTICE IS TO INFORM THE APPLICANT OF THE STEPS NECESSARY TO OBTAIN A VALID AND EFFECTIVE COASTAL DEVELOPMENT PERMIT ("CDP"). A Coastal Development Permit for the development described below has been approved but is not yet effective. Development on the site cannot commence until the CDP is effective. In order for the CDP to be effective, Commission staff must issue the CDP to the applicant, and the applicant must sign and return the CDP. **Commission staff cannot issue the CDP until the applicant has fulfilled each of the "prior to issuance" Special Conditions.** A list of all of the Special Conditions for this permit is attached.

The Commission's approval of the CDP is valid for two years from the date of approval. To prevent expiration of the CDP, you must fulfill the "prior to issuance" Special Conditions, obtain and sign the CDP, and commence development within two years of the approval date specified below. You may apply for an extension of the permit pursuant to the Commission's regulations at Cal. Code Regs. title 14, section 13169.

On **August 10, 2011**, the California Coastal Commission approved Coastal Development Permit No. **6-11-044**, requested by **City of San Diego** subject to the attached conditions, for development consisting of: **Demolition of an existing three-story, 30 ft. high, 897 sq. ft. lifeguard station and construction of a new three-story, 30 ft. high, 3,125 sq. ft. lifeguard station including a buried semi-circular sheet-pile bulkhead seawall located 30 feet seaward of the proposed lifeguard structure. Also proposed is an architectural concrete cap on top of the bulkhead wall a maximum of approximately 3 ft. high,** more specifically described in the application file in the Commission offices. **Commission staff will not issue the CDP until the "prior to issuance" special conditions have been satisfied.**

The development is within the coastal zone **on the beach adjacent to 700 North Jetty Road, Mission Beach, San Diego, San Diego County. APN 423-750-01.**

requirements of the City Engineer, the underlying zone(s), conditions of this Permit, and any other applicable regulations of the SDMC in effect for this site.

STANDARD REQUIREMENTS:

1. Construction, grading or demolition must commence and be pursued in a diligent manner within thirty-six months after the effective date of final approval by the City, following all appeals. Failure to utilize the permit within thirty-six months will automatically void the permit unless an Extension of Time has been granted. Any such Extension of Time must meet all the SDMC requirements and applicable guidelines in effect at the time the extension is considered by the appropriate decision maker.

2. No permit for the construction, occupancy or operation of any facility or improvement described herein shall be granted, nor shall any activity authorized by this Permit be conducted on the premises until:

a. The Permittee signs and returns the Permit to the Development Services Department; and

b. The Permit is recorded in the Office of the San Diego County Recorder.

3. Unless this Permit has been revoked by the City of San Diego the property included by reference within this Permit shall be used only for the purposes and under the terms and conditions set forth in this Permit unless otherwise authorized by the City Manager.

4. This Permit is a covenant running with the subject property and shall be binding upon the Permittee and any successor or successors, and the interests of any successor shall be subject to each and every condition set out in this Permit and all referenced documents.

5. The utilization and continued use of this Permit shall be subject to the regulations of this and any other applicable governmental agency.

6. Issuance of this Permit by the City of San Diego does not authorize the Permittee for this permit to violate any Federal, State or City laws, ordinances, regulations or policies including, but not limited to, the Endangered Species Act of 1973 [ESA] and any amendments thereto (16 U.S.C. § 1531 et seq.).

7. The Owner/Permittee shall secure all necessary building permits. The applicant is informed that to secure these permits, substantial modifications to the building and site improvements to comply with applicable building, fire, mechanical and plumbing codes and State law requiring access for disabled people may be required.

8. Before issuance of any building or grading permits, complete grading and working drawings shall be submitted to the City Manager for approval. Plans shall be in substantial conformity to Exhibit "A," on file in the Development Services Department. No changes,

ORIGINAL

3. **Interpretation.** Any questions of intent or interpretation of any condition will be resolved by the Executive Director or the Commission.

4. **Assignment.** The permit may be assigned to any qualified person, provided assignee files with the Commission an affidavit accepting all terms and conditions of the permit.

5. **Terms and Conditions Run with the Land.** These terms and conditions shall be perpetual, and it is the intention of the Commission and the permittee to bind all future owners and possessors of the subject property to the terms and conditions.

SPECIAL CONDITIONS:

The permit is subject to the following conditions:

1. Final Plans. **PRIOR TO THE ISSUANCE OF THE COASTAL DEVELOPMENT PERMIT**, the applicant shall submit to the Executive Director for review and written approval final site and building plans for the proposed lifeguard station. The final plans shall be in substantial conformance with the plans by Dominy + Associates Architects dated 6/2/2011, but shall be revised to include the following notes:

a) No advertising shall be permitted on the approved structures;

b) Clocks, temperature displays, or other safety information may be located on the façade of the approved structures.

c) Any fill material used during construction shall be clean, beach compatible material with no rubble, organics, or other debris.

d) During construction of the approved development, disturbance to sand and intertidal areas shall be minimized to the maximum extent feasible. All excavated beach sand shall be redeposited on the beach. Local sand, cobbles or shoreline rocks shall not be used for backfill or for any other purpose as construction material.

e) The landscaping proposed along the perimeter of the new lifeguard station shall be deleted.

The permittee shall undertake the development in accordance with the approved plans. Any proposed changes to the approved plans shall be reported to the Executive Director. No changes to the plans shall occur without a Coastal Commission approved amendment to this coastal development permit unless the Executive Director determines that no amendment is legally required.

2. As-Built Plans. Within 60 days following completion of the project, the permittees shall submit as-built plans to be reviewed and approved in writing by the Executive Director, documenting that the lifeguard station and seawall have been constructed consistent with the Executive Director approved construction plans

3. Storage and Staging Areas/Access Corridors. **PRIOR TO THE ISSUANCE OF THE COASTAL DEVELOPMENT PERMIT**, the applicant shall submit to the Executive Director for review and written approval, final plans indicating the location of access corridors to the construction site and staging areas. The final plans shall indicate that:

a) No overnight storage of equipment or materials shall occur on sandy beach or public parking spaces.

b) Access corridors shall be located in a manner that has the least impact on public access to and along the shoreline via Mission Boulevard, Ocean Front Walk and the public parking lot south of the project site.

c) No work shall occur on the beach between Memorial Day weekend and Labor Day of any year.

d) The applicant shall submit evidence that the approved plans/notes have been incorporated into construction bid documents. The staging site shall be removed and/or restored immediately following completion of the development.

The permittee shall undertake the development in accordance with the approved plans. Any proposed changes to the approved plans shall be reported to the Executive Director. No changes to the plans shall occur without a Coastal Commission approved amendment to this coastal development permit unless the Executive Director determines that no amendment is legally required.

4. Protection of Water Quality - During Construction. **PRIOR TO ISSUANCE OF THE COASTAL DEVELOPMENT PERMIT**, the applicant shall submit for the review and approval of the Executive Director a Construction Best Management Practices Plan for the project site, prepared by a licensed professional, and shall incorporate erosion, sediment, and chemical control Best Management Practices (BMPs) designed to minimize to the maximum extent practicable the adverse impacts to receiving waters associated with construction. The applicant shall implement the approved Construction Best Management Practices Plan on the project site prior to and concurrent with the project staging, demolition and construction operations. The BMPs shall be maintained throughout the development process.

A. Said plan shall include the following requirements:

(i) No construction materials, debris, or waste shall be placed or stored in a manner where it may be subject to wave, wind, rain, or tidal erosion and dispersion.

(ii) Any and all refuse and debris resulting from construction and demolition activities shall be removed from the project site within 72 hours of completion of demolition and construction. Construction and demolition debris and sediment shall be removed from or contained and secured within work areas each day that construction or demolition occurs to prevent the accumulation of sediment and other debris that could be discharged into coastal waters. All demolition/ construction debris and other waste materials removed from the project site shall be disposed of or recycled in compliance with all local, state and federal regulations. No debris or other waste materials shall be placed in coastal waters or be allowed to move into coastal waters. If a disposal site is located in the coastal zone, a coastal development permit or an amendment to this permit shall be required before disposal can take place.

(iv) Erosion control/sedimentation Best Management Practices (BMPs) shall be used to control dust and sedimentation impacts to coastal waters during construction and demolition activities. BMPs shall include, but are not limited to: placement of sand bags around drainage inlets to prevent runoff/sediment transport into the storm drain system and Pacific Ocean

(v) All construction materials, excluding lumber, shall be covered and enclosed on all sides, and kept as far away from a storm drain inlet and receiving waters as possible.

8. The required Construction Best Management Practices Plan for the project site shall also include the following BMPs designed to prevent spillage and/or runoff of construction and demolition-related materials, sediment, or contaminants associated with construction activity. The applicant shall:

(i) Develop and implement spill prevention and control measures and ensure the proper handling, storage, and application of petroleum products and other construction materials. These shall include a designated fueling and vehicle maintenance area with appropriate berms and protection to prevent any spillage of gasoline or related petroleum products or contact with runoff. The fueling and maintenance area shall be located as far away from the receiving waters and storm drain inlets as possible and shall not be located on the beach if at all possible. If fueling or maintenance is proposed to be on the beach then the applicant shall submit a plan showing how there is essentially no possibility of contaminating beach materials through those operations.

(ii) Maintain and wash equipment and machinery in confined areas specifically designed to control runoff. Thinners or solvents shall not be discharged into sanitary or storm sewer systems. Washout from concrete trucks shall be disposed of at a controlled location not subject to runoff into coastal waters, and more than fifty feet away from a storm drain, open ditch or surface waters.

(iii) Provide and maintain adequate disposal facilities for solid waste, including excess concrete, produced during construction.

(iv) Provide and maintain temporary sediment basins (including debris basins, desilting basins or silt traps), temporary drains and swales, sand bag barriers, wind barriers such as solid board fence or hay bales, and silt fencing.

(v) Stabilize any stockpiled fill with geofabric covers or other appropriate cover, and close and stabilize open trenches as soon as possible.

(vi) Prior to final inspection of the proposed project the applicant shall ensure that no gasoline, lubricant, or other petroleum-based product was deposited on the beach or at any beach facility. If such residues are discovered, the residues and all contaminated sand shall be reported to the Executive Director in order to determine if the removal and disposal of the

contaminated matter shall require a permit amendment pursuant to the requirements of the Coastal Act and the California Code of Regulations.

The Construction Best Management Practices Plan approved by the Executive Director pursuant to this condition shall be attached to all final construction plans. The permittee shall undertake the approved development in accordance with the Construction Best Management Practices Plan approved by the Executive Director pursuant to this condition. Any proposed changes to the approved Construction Best Management Practices Plan shall be reported to the Executive Director in order to determine if the proposed change shall require a permit amendment pursuant to the requirements of the Coastal Act and the California Code of Regulations. No changes to the approved plan shall occur without a Commission amendment to this coastal development permit unless the Executive Director determines that no amendment is legally required.

5. Protection of Water Quality - Project Design & Post Construction. **PRIOR TO ISSUANCE OF THE COASTAL DEVELOPMENT PERMIT**, the applicant shall submit for the review and approval of the Executive Director, a Water Quality Management Plan (WQMP) for the post-construction project site, prepared by a licensed water quality professional, and shall incorporate structural and non-structural Best Management Practices (BMPs) designed to reduce, to the maximum extent practicable, the volume, velocity and pollutant load of storm water and nuisance flow leaving the developed site. The plan shall be in conformance with the following requirements:

A. Water Quality Goals.

(i) Appropriate site design, source control and treatment control BMPs shall be implemented to minimize the amount of polluted runoff from all surfaces and activities at the development.

(ii) Runoff from all parking areas, maintenance areas, rooftops, and driveways shall be collected and directed through a system of appropriate structural BMPs. The filter elements shall be designed to 1) trap sediment, particulates and other solids and 2) remove or mitigate contaminants through filtration and/or biological uptake. There shall be no construction of drain outlets onto the beach. The drainage system shall also be designed to convey and discharge runoff from the building site in a non-erosive manner.

(iii) If the applicant uses post-construction structural BMPs (or suites of BMPs), they should be designed to treat, infiltrate or filter the amount of storm water

runoff produced by all storms up to and including the 85th percentile, 24-hour storm event for volume-based BMPs, and/or the 85th percentile, 1-hour storm event, with an appropriate safety factor (i.e., 2 or greater), for flow-based BMPs.

B. Monitoring and Maintenance

All BMPs shall be operated, monitored, and maintained for the life of the project and at a minimum, all structural BMPs shall be inspected, cleaned-out, and where necessary, repaired, at the following minimum frequencies: 1) prior to October 15th each year; 2) during each month between October 15th and April 15th of each year and, 3) at least twice during the dry season (between April 16 and October 14).

(i) Debris and other water pollutants removed from structural BMP(s) during clean-out shall be contained and disposed of in a proper manner.

(ii) All inspection, maintenance and clean-out activities shall be documented in an **annual report** submitted to the Executive Director no later than June 30th of each year. This report shall be submitted for the first three years following the completion of development.

(iii) It is the applicant's responsibility to maintain the drainage system and the associated structures and BMPs according to manufacturer's specification.

The permittee shall undertake and maintain the approved development in accordance with the Water Quality Management Plan approved by the Executive Director pursuant to this condition. Any proposed changes to the approved Water Quality Management Plan shall be reported to the Executive Director in order to determine if the proposed change shall require a permit amendment pursuant to the requirements of the Coastal Act and the California Code of Regulations. No changes to the approved plan shall occur without a Commission amendment to this coastal development permit unless the Executive Director determines that no amendment is legally required.

6. Exterior Treatment. **PRIOR TO ISSUANCE OF THE COASTAL DEVELOPMENT PERMIT AMENDMENT**, the applicant shall submit for the review and approval in writing of the Executive Director, a final color board or other indication of the exterior materials and color scheme to be utilized in the construction of the proposed lifeguard station, in substantial conformance with the plans by Dominy + Associates Architects dated 6/2/2011. The color of the structures and roofs

permitted hereby shall be restricted to colors compatible with the surrounding environment with no bright tones except as minor accents. All windows shall be comprised of non-glare glass.

The permittee shall undertake the development in accordance with the color board. Any proposed changes to the approved color board shall be reported to the Executive Director. No changes to the color board that result in either building taking on a substantially different appearance inconsistent with the surrounding environment shall occur without a Coastal Commission approved amendment to this coastal development permit unless the Executive Director determines that no amendment is legally required.

7. Removal of Riprap. **PRIOR TO ISSUANCE OF THE COASTAL DEVELOPMENT PERMIT**, the applicant shall submit for review and written approval of the Executive Director a plan for removal of the rip rap from the beach fronting the existing lifeguard station proposed to be demolished. The removal plan shall provide:

a. All visible and extractable rip rap seaward of the existing lifeguard station proposed to be demolished shall be removed from the beach. The rock shall be removed within the identified work area (Site Plan from TerraCosta Consulting Group/Figure 1).

b. After the initial removal effort that is part of construction, future maintenance efforts shall include removal of any additional riprap (excluding approved foestone) from the portions of the dry beach seaward of the existing lifeguard station that may become visible in the future.

c. A schedule for removal, with the first extraction to occur within 1 year of issuance of the Coastal Development Permit;

d. Criteria for removal, such as all visible rock, all rock within 3 feet of the surface of the sand layer;

e. Method of removal;

f. Location of the export site. If the export site is within the coastal zone, a separate Coastal Development Permit or permit amendment may be required from the California Coastal Commission or its successors in interest;

g. General plans for the disposal of additional riprap that may become visible in subsequent years.

h. Removal of riprap shall not occur between Memorial Day weekend and Labor Day of any year.

8. State Lands Commission Review. **PRIOR TO ISSUANCE OF THE COASTAL DEVELOPMENT PERMIT**, the applicant shall obtain a copy of written authorization to construct the proposed development from the State Lands Commission.

9. No Future Seaward Extension of Shoreline Protective Device.

A. By acceptance of this Permit, the applicant agrees, on behalf of itself (or himself or herself, as applicable) and all successors and assigns, that no future repair or maintenance, enhancement, reinforcement, or any other activity affecting the shoreline protective device for the lifeguard tower approved pursuant to Coastal Development Permit No.6-11-044, as described and depicted on an Exhibit attached to the Notice of Intent to Issue Permit (NOI) that the Executive Director issues for this permit, shall be undertaken if such activity extends the footprint seaward of the subject shoreline protective device. By acceptance of this Permit, the applicant waives, on behalf of itself (or himself or herself, as applicable) and all successors and assigns, any rights to such activity that may exist under Public Resources Code Section 30235.

B. **PRIOR TO THE ISSUANCE BY THE EXECUTIVE DIRECTOR OF THE NOI FOR THIS PERMIT**, the applicant shall submit for the review and approval of the Executive Director, and upon such approval, for attachment as an Exhibit to the NOI, a formal legal description and graphic depiction of the shoreline protective device approved by this permit, as generally described above and shown on Exhibit #s 1 & 7 attached to this staff report, showing the footprint of the device and the elevation of the device referenced to NGVD (National Geodetic Vertical Datum).

10. Assumption of Risk, Waiver of Liability and Indemnity Agreement

A. By acceptance of this permit, the applicant acknowledges and agrees (i) that the site may be subject to hazards from waves, storm waves, flooding and erosion; (ii) to assume the risks to the applicant and the property that is the subject of this permit of injury and damage from such hazards in connection with this permitted development; (iii) to unconditionally waive any claim of

damage or liability against the Commission, its officers, agents, and employees for injury or damage from such hazards; and (iv) to indemnify and hold harmless the Commission, its officers, agents, and employees with respect to the Commission's approval of the project against any and all liability, claims, demands, damages, costs (including costs and fees incurred in defense of such claims), expenses, and amounts paid in settlement arising from any injury or damage due to such hazards.

B. **PRIOR TO ANY CONVEYANCE OF THE PROPERTY THAT IS THE SUBJECT OF THIS COASTAL DEVELOPMENT PERMIT**, the applicant shall execute and record a deed restriction, in a form and content acceptable to the Executive Director: (1) indicating that, pursuant to this permit, the California Coastal Commission has authorized development on the subject property, subject to terms and conditions that restrict the use and enjoyment of that property (hereinafter referred to as the "Standard and Special Conditions"); and (2) imposing all Standard and Special Conditions of this permit as covenants, conditions and restrictions on the use and enjoyment of the Property. The restriction shall include a legal description of the applicant's entire parcel or parcels. It shall also indicate that, in the event of an extinguishment or termination of the deed restriction for any reason, the Standard and Special Conditions of this permit shall continue to restrict the use and enjoyment of the subject property so long as either this permit or the development it authorizes – or any part, modification, or amendment thereof – remains in existence on or with respect to the subject property.

C. **PRIOR TO ISSUANCE OF THE COASTAL DEVELOPMENT PERMIT**, the applicant shall submit a written agreement, in a form and content acceptable to the Executive Director, incorporating all of the above terms of this condition.

© COPYRIGHT October 13, 2014 at 8:31AM

G-5

Dominy+Associates Architects @ domusstudio
2150 West Washington, Suite 303
San Diego, California 92110
Tel 619.692.9393
Fax 619.692.9394
domusstudio.com

SPEC. NO. 8147

LICENSED ARCHITECT WAYNE POPPER No. C12113 REN 9.30.15 STATE OF CALIFORNIA

PLANS FOR THE CONSTRUCTION OF

South Mission Beach Lifeguard Station

Coastal Development Conditions — T5.0

CITY OF SAN DIEGO, CALIFORNIA
ENGINEERING & CAPITAL PROJECTS
ARCHITECTURAL ENGINEERING & CONTRACTS DIVISION
SHEET 05 OF 94 SHEETS

WBS S-00791

APPROVED: _____ FOR CITY ENGINEER — DATE 10/13/2014

SUBMITTED BY: JIHAD SLEIMAN — PROJECT MANAGER

DESCRIPTION	BY	APPROVED	DATE	FILMED
ORIGINAL	WH/TT			

YOUSIF BENYAMIN — PROJECT ENGINEER
218–1893
CCS27 COORDINATES
1858–6253
CCS83 COORDINATES

CONTRACTOR _____ DATE STARTED _____
INSPECTOR _____ DATE COMPLETED _____

32849–05–D

© COPYRIGHT October 13, 2014 at 8:32AM
Proprietary design. These drawings and design are protected by common law copyright. All patentable material contained herein and originating with Dominy + Associates Architects @ domusstudio LLP shall be the property of Dominy + Associates Architects @ domusstudio LLP

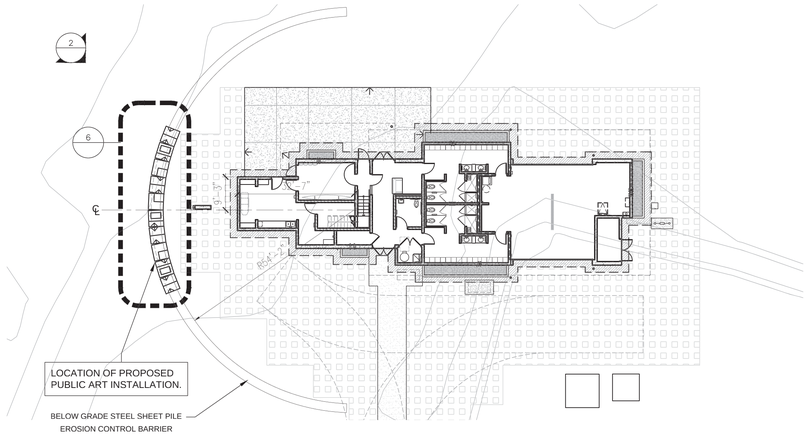

1 Site Plan

0' 5' 10' 20' 40'

SCALE: 1" = 20'

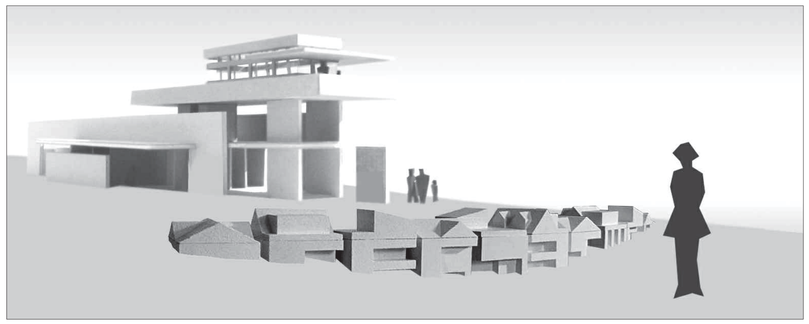

2 Concept Image - 'Beach Castles'

NTS

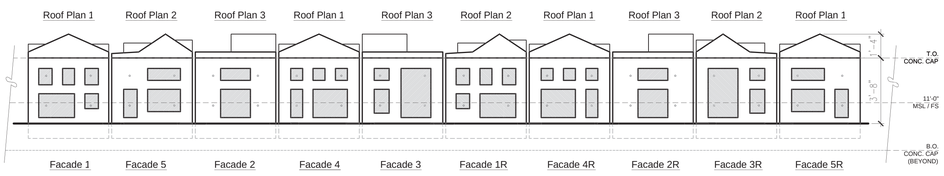

3 West Elevation

1/4" = 1'-0"

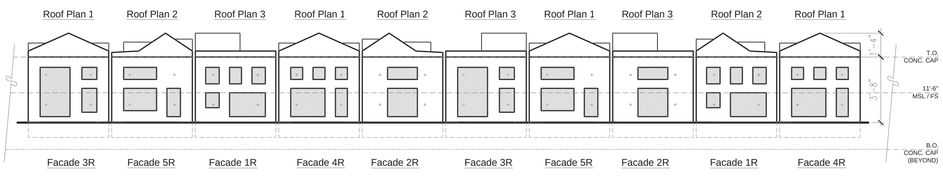

4 East Elevation

1/4" = 1'-0"

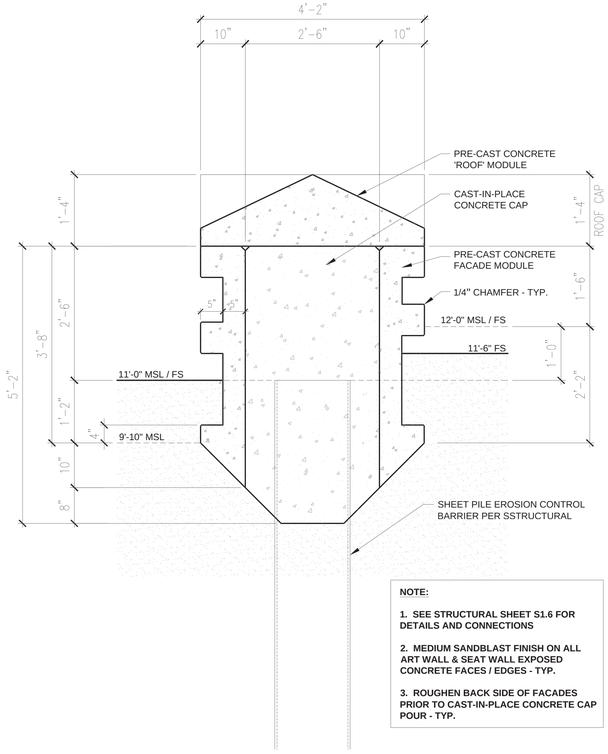

NOTE:

1. SEE STRUCTURAL SHEET S1.6 FOR DETAILS AND CONNECTIONS

2. MEDIUM SANDBLAST FINISH ON ALL ART WALL & SEAT WALL EXPOSED CONCRETE FACES / EDGES - TYP.

3. ROUGHEN BACK SIDE OF FACADES PRIOR TO CAST-IN-PLACE CONCRETE CAP POUR - TYP.

5 Partial Wall Section

3/4" = 1'-0"

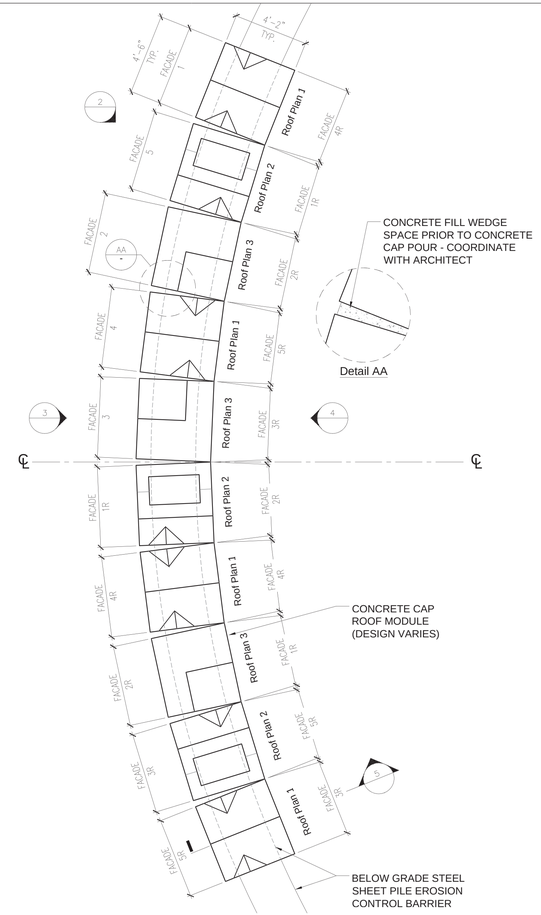

6 Partial Plan

1/4" = 1'-0"

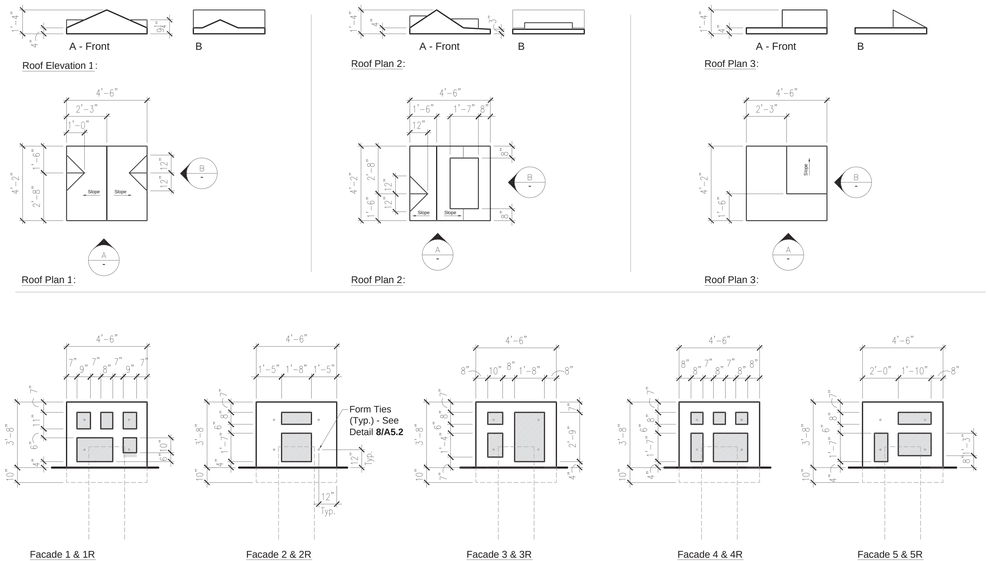

7 'Facades' and 'Roofs' - Plans & Elevations

1/4" = 1'-0"

South Mission Beach Lifeguard Station

7000 N. Jetty Road

CONCEPT ARTIST: ROMAN de SALVO

G-6

Dominy + Associates Architects @ domusstudio
2150 West Washington, Suite 303
San Diego, California 92110
Tel 619.692.9393
Fax 619.692.9394
domusstudio.com

SPEC. NO. 8147

LICENSED ARCHITECT ROMAN DOMINIC POLLARI No. C12113 REN 9.30.15 STATE OF CALIFORNIA

PLANS FOR THE CONSTRUCTION OF

South Mission Beach Lifeguard Station

Public Art Wall - 'Beach Castles' | PA0.1

CITY OF SAN DIEGO, CALIFORNIA
ENGINEERING & CAPITAL PROJECTS
ARCHITECTURAL ENGINEERING & CONTRACTS DIVISION
SHEET 06 OF 94 SHEETS

WBS S-00791

APPROVED: _____ FOR CITY ENGINEER — DATE 10/13/2014

SUBMITTED BY: JIHAD SLEIMAN, PROJECT MANAGER

DESCRIPTION	BY	APPROVED	DATE	FILMED
ORIGINAL	WH/TT			

YOUSIF BENYAMIN, PROJECT ENGINEER

218-1693
CCS27 COORDINATES
1858-6253
CCS83 COORDINATES

CONTRACTOR _____ DATE STARTED _____
INSPECTOR _____ DATE COMPLETED _____

32849-06-D

SOUTH MISSION BEACH LIFEGUARD STATION

IMPROVEMENT PLANS FOR:

GENERAL NOTES

1. APPROVAL OF THESE PLANS BY THE CITY ENGINEER DOES NOT AUTHORIZE ANY WORK TO BE PERFORMED UNTIL A PERMIT HAS BEEN ISSUED.

2. THE APPROVAL OF THIS PLAN OR ISSUANCE OF A PERMIT BY THE CITY OF SAN DIEGO DOES NOT AUTHORIZE THE CONTRACTOR TO VIOLATE ANY FEDERAL, STATE OR CITY LAWS, ORDINANCES, REGULATIONS, OR POLICIES, INCLUDING, BUT NOT LIMITED TO, THE FEDERAL ENDANGERED SPECIES ACT OF 1973 AND AMENDMENTS THERETO (16 USC SECTION 1531 ET.SEQ.)

3. THE CONTRACTOR SHALL BE RESPONSIBLE FOR SURVEY MONUMENTS AND/OR VERTICAL CONTROL BENCHMARKS WHICH ARE DISTURBED OR DESTROYED BY CONSTRUCTION. A LAND SURVEYOR MUST FIELD LOCATE, REFERENCE, AND/OR PRESERVE ALL HISTORICAL OR CONTROLLING MONUMENTS PRIOR TO ANY EARTHWORK. IF DESTROYED, A LAND SURVEYOR SHALL REPLACE SUCH MONUMENTS WITH APPROPRIATE MONUMENTS. A CORNER RECORD OR RECORD OF SURVEY, AS APPROPRIATE, SHALL BE FILED AS REQUIRED BY THE PROFESSIONAL LAND SURVEYORS ACT, SECTION 8771 OF THE BUSINESS AND PROFESSIONS CODE OF THE STATE OF CALIFORNIA. IF ANY VERTICAL CONTROL IS TO BE DISTURBED OR DESTROYED, THE CITY OF SAN DIEGO FIELD SURVEY SECTION MUST BE NOTIFIED, IN WRITING, AT LEAST 3 DAYS PRIOR TO THE CONSTRUCTION. THE CONTRACTOR WILL BE RESPONSIBLE FOR THE COST OF REPLACING ANY VERTICAL CONTROL BENCHMARKS DESTROYED BY THE CONSTRUCTION.

4. IMPORTANT NOTICE: SECTION 4216 OF THE GOVERNMENT CODE REQUIRES A DIG ALERT IDENTIFICATION NUMBER BE ISSUED BEFORE A ''PERMIT TO EXCAVATE" WILL BE VALID. FOR YOUR DIG ALERT I.D. NUMBER, CALL UNDERGROUND SERVICE ALERT, TOLL FREE 1-800-422-4133, TWO DAYS BEFORE YOU DIG.

5. CONTRACTOR SHALL IMPLEMENT AN EROSION AND SEDIMENT CONTROL PROGRAM DURING THE PROJECT GRADING AND/OR CONSTRUCTION ACTIVITIES. THE PROGRAM SHALL MEET ALL APPLICABLE REQUIREMENTS OF THE STATE WATER RESOURCE CONTROL BOARD AND THE CITY OF SAN DIEGO MUNICIPAL CODE AND STORM WATER STANDARDS MANUAL.

6. ALL EXISTING AND/OR PROPOSED PUBLIC UTILITY SYSTEM AND SERVICE FACILITIES SHALL BE INSTALLED UNDERGROUND IN ACCORDANCE WITH SECTION 144.0240 OF THE MUNICIPAL CODE.

7. PRIOR TO ANY DISTURBANCE TO THE SITE, EXCLUDING UTILITY MARK-OUTS AND SURVEYING, THE CONTRACTOR SHALL MAKE ARRANGEMENTS FOR A PRE-CONSTRUCTION MEETING WITH THE CITY OF SAN DIEGO FIELD ENGINEERING DIVISION (858) 627-3200.

8. DEVIATIONS FROM THESE SIGNED PLANS WILL NOT BE ALLOWED UNLESS A CONSTRUCTION CHANGE IS APPROVED BY THE CITY ENGINEER OR THE CHANGE IS REQUIRED BY THE CITY INSPECTOR.

9. AS-BUILT DRAWINGS MUST BE SUBMITTED TO THE RESIDENT ENGINEER PRIOR TO ACCEPTANCE OF THIS PROJECT BY THE CITY OF SAN DIEGO.

10. AN AS-GRADED GEOTECHNICAL REPORT AND A SET OF THE REDLINE GRADING PLANS SHALL BE SUBMITTED AT AREA 3 ON THE THIRD FLOOR OF DEVELOPMENT SERVICES WITHIN 30 CALENDAR DAYS OF THE COMPLETION OF GRADING. AN ADDITIONAL SET SHALL BE PROVIDED TO THE RESIDENT ENGINEER OF THE FIELD ENGINEERING DIVISION AT 9485 AERO DR.

11. THE AREA WHICH IS DEFINED AS A NON GRADING AREA AND WHICH IS NOT TO BE DISTURBED SHALL BE STAKED AND DELINEATED WITH HIGH VISIBILITY FENCE PRIOR TO START OF THE WORK. THE PERMIT APPLICANT AND ALL OF THEIR REPRESENTATIVES OR CONTRACTORS SHALL COMPLY WITH THE REQUIREMENTS FOR PROTECTION OF THIS AREA AS REQUIRED BY ANY APPLICABLE AGENCY. ISSUANCE OF THE CITY'S GRADING PERMIT SHALL NOT RELIEVE THE APPLICANT OR ANY OF THEIR REPRESENTATIVES OR CONTRACTORS FROM COMPLYING WITH ANY STATE OR FEDERAL REQUIREMENTS BY AGENCIES INCLUDING BUT NOT LIMITED TO CALIFORNIA REGIONAL WATER QUALITY CONTROL BOARD, CALIFORNIA DEPARTMENT OF FISH AND GAME. COMPLIANCE MAY INCLUDE OBTAINING PERMITS, OTHER AUTHORIZATIONS, OR COMPLIANCE WITH MANDATES BY ANY APPLICABLE STATE OR FEDERAL AGENCY.

12. ALL ONSITE, PRIVATE IMPROVEMENTS SHOWN ON THIS DRAWING ARE FOR INFORMATION ONLY. THE CITY ENGINEERS'S APPROVAL OF THE DRAWING, IN NO WAY CONSTITUTES AN APPROVAL OF SAID PRIVATE IMPROVEMENTS. A SEPARATE PERMIT FOR SUCH IMPROVEMENTS MAY BE REQUIRED.

13. CONTRACTOR SHALL COORDINATE WTH ADJACENT PROPERTY OWNERS FOR ACCESS AND COMMENCEMENT OF CONSTRUCTION.

14. CONTRACTOR TO ENSURE CONSTRUCTION DOES NOT EXCEED HOURS OF CONSTRUCTION BETWEEN 8:00AM AND 3:30PM.

SPECIAL NOTES

THE FOLLOWING NOTES ARE PROVIDED TO GIVE DIRECTION TO THE CONTRACTOR BY THE ENGINEER OF WORK. THE CITY ENGINEER'S SIGNATURE ON THESE PLANS DOES NOT CONSTITUTE APPROVAL OF THESE NOTES AND THE CITY WILL NOT BE RESPONSIBLE FOR THEIR ENFORCEMENT.

1. THE ENGINEER OF WORK SHALL NOT BE RESPONSIBLE FOR THE CONTRACTOR'S FAILURE TO CARRY OUT CONSTRUCTION WORK IN ACCORDANCE WITH THE CONTRACT DOCUMENTS, NOR SHALL THE ENGINEER BE REQUIRED TO SUPERVISE CONDUCT OF THE WORK OF THE CONSTRUCTION PROCEDURES AND SAFETY PROCEDURES FOLLOWED BY THE CONTRACTOR OR SUBCONTRACTORS OR THEIR RESPECTIVE EMPLOYEES OR BY ANOTHER PERSON AT THE JOB SITE OTHER THAN THAT OF THE ENGINEER'S EMPLOYEES.
2. THE LOCATIONS OF ANY UNDERGROUND STRUCTURES AS SHOWN ON THESE PLANS HAVE BEEN OBTAINED FROM AVAILABLE RECORDS AND ARE SHOWN FOR THE BENEFIT OF THE CONTRACTOR. THE CONTRACTOR SHALL TAKE ALL NECESSARY PRECAUTIONARY MEASURES TO PROTECT ALL UNDERGROUND OR OVERHEAD STRUCTURES WHETHER SHOWN OR NOT ON THESE DRAWINGS
3. THE CONTRACTOR SHALL VERIFY THE LOCATION OF AND PROTECT ALL EXISTING IMPROVEMENTS BEFORE AND DURING CONSTRUCTION. CONTRACTOR SHALL PROVIDE PICTURES AND VIDEO OF SURROUNDING HOUSES, LANDSCAPE, AND EXISTING INFRASTRUCTURE PRIOR TO CONSTRUCTION. CONTRACTOR TO PROVIDE COPIES OF VIDEOS AND PICTURES TO THE CITY OF SAN DIEGO.
4. CONTRACTOR SHALL MAKE EXPLORATION EXCAVATIONS AND LOCATE EXISTING UNDERGROUND FACILITIES SUFFICIENTLY AHEAD OF CONSTRUCTION TO PERMIT REVISIONS TO PLANS IF REVISIONS ARE NECESSARY BECAUSE OF LOCATION OF EXISTING FACILITIES.
5. CONSTRUCTION CONTRACTOR AGREES THAT IN ACCORDANCE WITH GENERALLY ACCEPTED CONSTRUCTION PRACTICES, CONSTRUCTION CONTRACTOR WILL BE REQUIRED TO ASSUME SOLE AND COMPLETE RESPONSIBILITY FOR THE JOB SITE CONDITIONS DURING THE COURSE OF CONSTRUCTION OF THE PROJECT INCLUDING SAFETY OF ALL PERSONS AND PROPERTY; THAT THIS REQUIREMENT SHALL BE MADE TO APPLY CONTINUOUSLY AND NOT BE LIMITED TO NORMAL WORKING HOURS, AND CONSTRUCTION CONTRACTOR FURTHER AGREES TO DEFEND, INDEMNIFY AND HOLD DESIGN PROFESSIONAL HARMLESS FROM ANY AND ALL LIABILITY, REAL OR ALLEGED, IN CONNECTION WITH THE PERFORMANCE OF WORK ON THIS PROJECT, EXCEPTING LIABILITY ARISING FROM THE SOLE NEGLIGENCE OF THE DESIGN PROFESSIONAL.

GRADING NOTES

1. GRADING SHOWN ON THESE PLANS SHALL BE IN CONFORMANCE WITH CURRENT STANDARD SPECIFICATIONS AND CHAPTER 14, ARTICLE 2, DIVISION 1, OF THE SAN DIEGO MUNICIPAL CODE.

2. GRADED, DISTURBED, OR ERODED AREAS THAT WILL NOT BE PERMANENTLY PAVED, COVERED BY STRUCTURE, OR PLANTED FOR A PERIOD OVER 90 DAYS, SHALL BE TEMPORARILY RE-VEGETATED WITH A NON-IRRIGATED HYDROSEED MIX, GROUND COVER, OR EQUIVALENT MATERIAL. SEE SHEET 10 FOR MIX AND SPECIFICATIONS.

3. THE PRECISE LOCATION OF SUBDRAINS SHALL BE ACCURATELY LOCATED AND SHOWN ON THE FINAL AS-GRADED PLANS.

CONSTRUCTION CHANGE TABLE

	DATE	AFFECTED OR ADDED SHEET NUMBERS

DECLARATION OF RESPONSIBLE CHARGE

I HEREBY DECLARE THAT I AM THE ENGINEER OF WORK FOR THIS PROJECT, THAT I HAVE EXERCISED RESPONSIBLE CHARGE OVER THE DESIGN OF THE PROJECT AS DEFINED IN SECTION 6703 OF THE BUSINESS AND PROFESSIONS CODE, AND THAT THE DESIGN IS CONSISTENT WITH CURRENT STANDARDS.

I UNDERSTAND THAT THE CHECK OF PROJECT DRAWINGS AND SPECIFICATIONS BY THE CITY OF SAN DIEGO IS CONFINED TO A REVIEW ONLY AND DOES NOT RELIEVE ME, AS ENGINEER OF WORK, OF MY RESPONSIBILITIES FOR PROJECT DESIGN.

Robert R. Gehrke — 10/10/14

ROBERT R. GEHRKE R.C.E. No. 45717 DATE

VICINITY MAP

NO SCALE

GRADING AND GEOTECHNICAL SPECIFICATIONS

1. ALL GRADING SHALL BE DONE UNDER OBSERVATION AND TESTING BY A QUALIFIED CIVIL ENGINEER OR GEOTECHNICAL ENGINEER AND, IF REQUIRED, BOTH A QUALIFIED CIVIL ENGINEER OR GEOTECHNICAL ENGINEER AND AN ENGINEERING GEOLOGIST. ALL GRADING MUST BE PERFORMED IN ACCORDANCE WITH APPLICABLE CITY ORDINANCE AND THE RECOMMENDATIONS AND SPECIFICATIONS SET FORTH IN THE SOILS REPORT OR GEOLOGICAL/GEOTECHNICAL INVESTIGATIONS ENTITLED:

GEOTECHNICAL INVESTIGATION AND COASTAL ENGINEERING REPORT, SOUTH MISSION BEACH LIFEGUARD TOWER (ALL ADDENDUMS)
PROJECT NUMBER: 2231
PREPARED BY: TERRACOSTA CONSULTING GROUP, INC. DATED: FEBRUARY 16, 2005

2. ALL FILL MATERIAL SHALL BE COMPACTED TO A MINIMUM OF 90% OF THE MAXIMUM DRY DENSITY AS DETERMINED BY THE MOST RECENT VERSION OF A.S.T.M. D-1557 OR AN APPROVED ALTERNATIVE STANDARD.

3. AT THE COMPLETION OF THE GRADING OPERATIONS FOR THE EARTHWORK SHOWN ON THIS PLAN, AN AS-GRADED SOILS REPORT, OR IF REQUIRED, AN AS-GRADED SOILS AND GEOLOGICAL REPORT WILL BE PREPARED IN ACCORDANCE WITH THE MOST RECENT EDITION OF THE CITY OF SAN DIEGO TECHNICAL GUIDELINES FOR GEOTECHNICAL REPORTS. THE FINAL "AS-GRADED" GEOTECHNICAL REPORT WILL BE SUBMITTED TO THE FIELD ENGINEERING SECTION OF PUBLIC WORKS AND A SECOND COPY TO THE GEOLOGY SECTION OF THE DEVELOPMENT SERVICES DEPARTMENT WITHIN 15 DAYS OF THE COMPLETION OF GRADING. WHERE GEOLOGIC INSPECTION IS INDICATED IN THE PERMIT OR PROJECT PLANS, REPORTS OR SPECIFICATIONS, THE FINAL REPORT MUST ALSO BE REVIEWED AND SIGNED BY A CALIFORNIA CERTIFIED ENGINEERING GEOLOGIST.

4. IF THE GEOTECHNICAL CONSULTANT OF RECORD IS CHANGED FOR THE PROJECT, THE WORK SHALL BE STOPPED UNTIL THE REPLACEMENT HAS AGREED IN WRITING TO ACCEPT THE RESPONSIBILITY WITHIN THE AREA OF THEIR TECHNICAL COMPETENCE FOR APPROVAL UPON COMPLETION OF THE WORK. IT SHALL BE THE DUTY OF THE PERMITTEE TO NOTIFY THE CITY ENGINEER AND THE LDR GEOLOGY SECTION OF THE DEVELOPMENT SERVICES DEPARTMENT IN WRITING OF SUCH CHANGE PRIOR TO THE RECOMMENCEMENT OF GRADING.

5. THESE GRADING PLANS HAVE BEEN REVIEWED BY THE UNDERSIGNED AND FOUND TO BE IN CONFORMANCE WITH THE RECOMMENDATIONS AND SPECIFICATIONS CONTAINED IN THE REFERENCED GEOTECHNICAL REPORT(S) PREPARED FOR THIS PROJECT.

October 10, 2014
WALTER CRAMPTON R.C.E. 23792, RGE 245 DATE

October 10, 2014
GREGORY SPAULDING C.E.G. 1863 DATE

TERRACOSTA CONSULTING GROUP INC.
Phone No. (858) 573-6900

6. FOR SOIL FILE SEE CITY RECORD S -

PROFESSIONAL GEOLOGIST — GREGORY A. SPAULDING No. 1863 CERTIFIED ENGINEERING GEOLOGIST — STATE OF CALIFORNIA

REGISTERED PROFESSIONAL ENGINEER — WALTER F. CRAMPTON No. 245 GEOTECHNICAL — STATE OF CALIFORNIA

SHEET INDEX

TITLE SHEET C-1
GENERAL NOTES C-2
DETAILS C-3
DETAILS C-4
DEMOLITION PLAN C-5
DEMOLITION PLAN C-6
GRADING AND DRAINAGE PLAN C-7
UTILITY PLAN C-8
UTILITY PLAN C-9
EROSION CONTROL NOTES AND DETAILS C-10
EROSION CONTROL PLAN C-11
HORIZONTAL CONTROL PLAN C-12

OWNER/APPLICANT

DOMINY & ASSOCIATES
2150 W. WASHINGTON ST. STE. 303, SAN DIEGO, CA 92110
(619) 692-9393

REFERENCE DRAWINGS

SOUTH MISSION BEACH PARK IMPROVEMENT PLANS 12177-D, 19158-D

SITE ADDRESS

700 NORTH JETTY ROAD, SAN DIEGO, CA 92109

ASSESSORS PARCEL NUMBER

423-750-01-00

TOPOGRAPHY SOURCE

RBF CONSULTING
9755 CLAIREMONT MESA BLVD., STE. 100
SAN DIEGO, CA 92124
FIELD SURVEY PERFORMED 10/03

BENCHMARK

CITY OF SAN DIEGO, MISSION AND CAPISTRANO PLACE
SEBP WITH AN ELEVATION OF 5.029 (MEAN SEA LEVEL, NGVD 29).

NOTE: IN OCTOBER 2011, THE CITY OF SAN DIEGO UPDATED THE ELEVATION OF THIS BENCHMARK TO 4.94. CONTRACTOR TO USE ELEVATION 5.029 FOR CONSTRUCTION STAKING.

LEGAL DESCRIPTION

PUEBLO LOT 1803 OF PUEBLO LANDS OF SAN DIEGO, IN THE CITY OF SAN DIEGO, COUNTY OF SAN DIEGO, STATE OF CALIFORNIA, ACCORDING TO THE MAP THEREOF MADE BY JAMES PASCOE IN 1870, A COPY OF WHICH MAP IS FILED AS MISCELLANEOUS MAP NO. 36 IN THE OFFICE OF THE COUNTY RECORDER OF SAID COUNTY OF SAN DIEGO, BOUNDED ON THE NORTH BY THE WESTERLY EXTENSION OF THE SOUTH LINE OF BALBOA COURT IN MISSION BEACH, AS SAME IS SHOWN ON MAP THEREOF NO. 1809, FILED IN THE COUNTY RECORDER'S OFFICE; BOUNDED ON ENTRANCE TO MISSION BAY (FALSE BAY); BOUNDED ON THE NORTHEAST AND EAST BY THE SOUTHWESTERLY LINES OF OCEAN FRONT WALK IN MISSION BEACH, THE SOUTHWESTERLY LINE OF MISSION BOULEVARD IN MISSION BEACH, AND THE SOUTHWESTERLY LINE OF THE LAND DESCRIBED IN DEED FROM UNION TRUST COMPANY OF SAN DIEGO, TO CITY OF SAN DIEGO, DATED FEBRUARY 3, 1906 AND RECORDED IN BOOK 700, PAGE 386 OF DEEDS.

LEGEND

PROPOSED IMPROVEMENTS

IMPROVEMENT	STANDARD DWGS.	SYMBOL
RIGHT-OF-WAY LINE		
PROPERTY LINE		
LOT LINE		
6" CONCRETE CURB	SDG-150	
6" CONCRETE CURB & GUTTER	SDG-151	
SEWER TYPE CLEANOUT (SCO)	SC-01	
GATE VALVE	SDW-152, SDW-153	
THRUST BLOCK	SDW-151	
FIRE HYDRANT	SDW-104	
2" WATER SERVICE WITH 1.5" METER AND 2" BACKFLOW PREVENTOR	SDW-113, SDW-149, SDW-155	W
4" FIRE SERVICE WITH REDUCED PRESSURE BACKFLOW PREVENTOR	SDW-105, SDW-118	FS
CURB RAMP (TYPE A)	SDG-132	
CONCRETE DRIVEWAY	SDG-159	
VEHICULAR CONCRETE PAVING		
PEDESTRIAN CONCRETE PAVING (SIDEWALK)	SDG-109, SDG-155, G-10	
CONCRETE EROSION CONTROL MAT ARMORFLEX CLASS 55S OR EQUAL		
AC PAVEMENT		
TRUNCATED DOMES	SDG-130	
GRADE BREAK		
DIRECTION OF FLOW (1% MIN.)		
GRADING DAYLIGHT LINE		
CONTOUR		10

EXISTING IMPROVEMENTS

ITEM	SYMBOL
EXISTING CONTOUR	150
EXISTING WATER	W
EXISTING FIRE HYDRANT	
EXISTING GATE VALVE	
EXISTING SEWER	S
EXISTING SEWER MANHOLE	
EXISTING GAS	G
EXISTING STREET LIGHT	
EXISTING STREET LIGHT	
EXISTING PED RAMP	
EXISTING DRIVEWAY	

WORK TO BE DONE

THE IMPROVEMENTS CONSIST OF THE FOLLOWING WORK TO BE DONE ACCORDING TO THESE PANS AND SPECIFICATIONS AND STANDARD DRAWINGS OF THE CITY OF SAN DIEGO.

STANDARD SPECIFICATIONS:

DOCUMENT NO.	DESCRIPTION
PITS070112-01	STANDARD SPECIFICATIONS FOR PUBLIC WORKS CONSTRUCTION (GREENBOOK), 2012 EDITION
PITS070112-02	CITY OF SAN DIEGO STANDARD SPECIFICATIONS FOR PUBLICWORKS CONSTRUCTION (WHITEBOOK), 2012 EDITION
PITS070112-04	CALIFORNIA DEPARTMENT OF TRANSPORTATION MANUAL OF UNIFORM TRAFFIC CONTROL DEVICES, 2012 EDITION
PITS070112-06	CALIFORNIA DEPARTMENT OF TRANSPORTATION U.S CUSTOMARY STANDARD SPECIFICATIONS, 2010 EDITION

STANDARD DRAWINGS:

DOCUMENT NO.	DESCRIPTION
PITS070112-03	CITY OF SAN DIEGO STANDARD DRAWINGS FOR PUBLIC WORKS CONSTRUCTION, 2012 EDITION
PITS070112-05	CALIFORNIA DEPARTMENT OF TRANSPORTATION U.S CUSTOMARY STANDARD PLANS, 2010 EDITION

ABBREVIATIONS

AC	ASPHALT CONCRETE
C.I.	CAST IRON
CONC	CONCRETE
CONN	CONNECTION
℄	CENTERLINE
DDCV	DOUBLE DETECTOR CHECK VALVE
DW	DOMESTIC WATER
EX	EXISTING
FF	FINISH FLOOR
IE	INVERT ELEVATION
NAT'L	NATIONAL
NTS	NOT TO SCALE
O.C.	ON CENTER
℘	PROPERTY LINE
POC	POINT OF CONNECTION
PSI	POUNDS PER SQUARE INCH
RIM	RIM ELEVATION
R/W	RIGHT OF WAY
RWQCB	REGIONAL WATER QUALITY CONTROL BOARD
SCO	SEWER CLEANOUT
SDRSD	SAN DIEGO REGIONAL STANDARD DRAWING
SMH	SEWER MANHOLE
STD	STANDARD
SWPPP	STORM WATER POLLUTION PREVENTION PLAN
TC	TOP OF CURB
TP	TOP OF PIPE
TYP.	TYPICAL

South Mission Beach Lifeguard Station
700 N. Jetty Road

C-1

RBF CONSULTING
A Baker Company
9755 CLAIREMONT MESA BLVD.
SAN DIEGO, CA. 92124
858-614-5000

SPEC. NO. 8147

REGISTERED PROFESSIONAL ENGINEER — ROBERT R. GEHRKE No. 45717 Exp. 12/31/14 CIVIL — STATE OF CALIFORNIA

PLANS FOR THE CONSTRUCTION OF
South Mission Beach Lifeguard Station

Title Sheet — C-1

CITY OF SAN DIEGO, CALIFORNIA
ENGINEERING & CAPITAL PROJECTS
ARCHITECTURAL ENGINEERING & CONTRACTS DIVISION
SHEET 7 OF 94 SHEETS

WBS S-00791

APPROVED: FOR CITY ENGINEER — DATE 10/13/2014

SUBMITTED BY: JIHAD SLEIMAN, PROJECT MANAGER

DESCRIPTION	BY	APPROVED	DATE	FILMED
ORIGINAL	WH/TT			

YOUSIF BENYAMIN
PROJECT ENGINEER
218-1693
CCS27 COORDINATES
1858-6253
CCS83 COORDINATES

CONTRACTOR ______ DATE STARTED ______
INSPECTOR ______ DATE COMPLETED ______

32849- 7 -D

© COPYRIGHT October 10, 2014 at 7:58AM Plot by ablackwood. File Location: H:\PDATA\25102729\CADD\Land\Div\Grading\Precise\2729-GR-01.dwg Proprietary design: These drawings and design are protected by common law copyright. All patentable material contained herein and originating with Dominy + Associates Architects @ domusstudio LLP shall be the property of Dominy + Associates Architects @ domusstudio LLP

© COPYRIGHT October 12, 2014 at 7:11PM Plot by ABLACKWOOD File Location: H:\PDATA\2510279\CAD\Land\Div\Grading\Precise\2729-GR-02.dwg Proprietary design: These drawings and design are protected by common law copyright. All patentable material contained herein and originating with Dominy + Associates Architects @ domusstudio LLP shall be the property of Dominy + Associates Architects @ domusstudio LLP

SEWER NOTES

1. LIFEGUARD STATION SHALL RECEIVE A 4-INCH SEWER LATERAL WITH THREE POINTS OF CONNECTION AS SHOWN.

2. LOCATE SEWER LATERAL A MINIMUM OF TEN FEET FROM TREES.

3. ALL HORIZONTAL SEPARATION DIMENSIONS SHOWN BETWEEN WATER AND SEWER MAINS SHALL BE MEASURED FROM THE NEAREST EDGE OF EACH PIPELINE PER STATE OF CALIFORNIA, DEPARTMENT OF HEALTH SERVICES, BASIC SEPARATION STANDARDS. MINIMUM SEPARATION BETWEEN WATER AND SEWER MAINS SHALL BE 10 FOOT HORIZONTAL AND 1 FOOT VERTICAL.

4. ALL PROPOSED PUBLIC SEWER FACILITY INSTALLATIONS SHALL BE CONSTRUCTED WITH MATERIALS CURRENTLY LISTED IN THE MOST CURRENT EDITION OF THE CITY OF SAN DIEGO WATER AND MUNICIPAL SEWER APPROVED MATERIALS LIST AS REFERENCED IN THE STANDARD SPECIFICATIONS FOR PUBLIC WORKS CONSTRUCTION.

5. ADDITIONAL NOTES MAY BE REQUIRED BY THE PLAN REVIEWER TO ADDRESS SPECIFIC PROJECT REQUIREMENTS AND MAY INCLUDE THE FOLLOWING: .

A. ALL PROPOSED SEWER SHOWN ON THESE PLANS SHALL ADHERE TO THE REQUIREMENTS OF THE CITY OF SAN DIEGO, SEWER DESIGN GUIDE, DOCUMENT NO. 769875, FILED JUNE 11, 2001.

B. FOR ALL SEWER PLANS: THE CONTRACTOR SHALL OBSERVE AND COMPLY WITH ALL FEDERAL, STATE, AND LOCAL LAWS, ORDINANCES, CODES, ORDERS, AND REGULATIONS WHICH IN ANY MANNER AFFECT THE CONDUCT OF THE WORK, SPECIFICALLY AS IT RELATES TO SEWAGE SPILLS. THE CONTRACTOR SHALL BE FULLY RESPONSIBLE FOR PREVENTING SEWAGE SPILLS, FOR CONTAINING SEWAGE SPILLS, AND FOR RECOVERY AND LEGAL DISPOSAL OF ANY SPILLED SEWAGE, AND FOR ANY FINES, PENALTIES, CLAIMS AND LIABILITY ARISING FROM CAUSING A SEWAGE SPILL, AND FOR ANY VIOLATION OF ANY LAW, ORDINANCE, CODE, ORDER, OR REGULATION AS A RESULT OF THE SPILL(S).

C. FOR WORK INVOLVING CONNECTION TO EXISTING FACILITIES: PRIOR TO THE START OF CONSTRUCTION WHICH INVOLVES ANY EXISTING WASTEWATER FACILITIES, THE CONTRACTOR SHALL BE RESPONSIBLE FOR DEVELOPING AND SUBMITTING TO THE RESIDENT ENGINEER FOR REVIEW AND APPROVAL, A WASTEWATER FLOW DIVERSION PLAN IN COMPLIANCE WITH THE CITY'S POLICY OF "ZERO SPILLS" AT LEAST FIFTEEN WORKING DAYS PRIOR TO IMPLEMENTATION OF THE PLAN. THE DIVERSION PLAN SHALL INCLUDE AN EMERGENCY RESPONSE PLAN INDICATING THE PROCEDURES, EQUIPMENT, AND ACTIVITIES THAT WILL BE IMPLEMENTED IN THE EVENT OF AN EMERGENCY SHUTDOWN OR FAILURE OF THE FLOW DIVERSION EQUIPMENT USED FOR CONSTRUCTION THE CONTRACTOR SHALL BE RESPONSIBLE FOR IMPLEMENTATION OF THE EMERGENCY PLAN IN ACCORDANCE WITH SECTION 7-8.8.1 OF THE 2003 CITY OF SAN DIEGO SUPPLEMENT AMENDMENTS (DOC. NO. AEC 701041) TO THE STANDARD SPECIFICATIONS FOR PUBLIC WORKS CONSTRUCTION.

WATER NOTES

1. LIFEGUARD STATION SHALL RECEIVE A 2-INCH WATER SERVICE AS SHOWN.

2. ALL CONNECTIONS TO EXISTING WATER MAINS ARE TO BE DONE BY THE CITY'S DEPARTMENT FOR WHICH THE FOLLOWING FEES WILL BE CHARGED. IF THE WATER CONNECTIONS ARE NOT READY TO BE MADE AND THE FEES PAID, THE CITY RESERVES THE RIGHT TO ADJUST THE FEES ACCORDING TO THE FEE SCHEDULE IN EFFECT AT THE TIME THE CONNECTIONS ARE MADE. IT IS THE RESPONSIBILITY OF THE CONTRACTOR TO EXPOSE THE EXISTING MAIN AT THE CONNECTION POINT AND TO INSTALL THE NEW MAIN AT THE ALIGNMENT AND GRADE WHICH WILL PERMIT THE CITY TO MAKE A "STRAIGHT-IN" CONNECTION WITHOUT USING MORE THAN 10 LINEAL FEET OF PIPE.

	COST	TYPE OF CONNECTION	SHEET
ITEM NO.1:	$ 318	8" WET TAP	C-9

3. FOR COORDINATION OF THE SHUTDOWN OF TRANSMISSION MAINS (16 INCHES AND LARGER), CONTACT THE CITY'S SENIOR WATER DISTRIBUTION OPERATIONS SUPERVISOR AT (619) 527-7465. FOR COORDINATION OF THE SHUTDOWN OF DISTRIBUTION MAINS (LESS THAN 16 INCHES), CONTACT THE CITY'S WATER OPERATIONS DISTRICT MANAGER AT (619) 527-3945. NO SHUTDOWN PROPOSED.

4. ALL VALVES WILL BE FLANGED TO CROSSES AND TEES. ONLY GATE VALVES SHALL BE USED IN FIRE HYDRANT INSTALLATIONS.

5. ALL PROPOSED WATER APPURTENANCES SHALL BE INSTALLED WITH MATERIALS LISTED IN THE SEPTEMBER 2013 PUBLIC UTILITIES DEPARTMENT FOR WATER APPROVED MATERIALS LIST.

6. HORIZONTAL AND VERTICAL CLEARANCES FROM WATER MAINS SHALL COMPLY WITH THE REGULATIONS SET FORTH BY THE CALIFORNIA DEPARTMENT OF PUBLIC HEALTH. ANY DEVIANCES FROM THESE REGULATIONS SHALL REQUIRE THE PLAN REVIEW AND APPROVAL OF THE DEPARTMENT OF PUBLIC HEALTH.

CORROSION NOTES

1. ALL BURIED DUCTILE AND GRAY CAST IRON PIPE, FITTINGS, VALVES AND APPURTENANCES SHALL BE COATED WITH A DIELECTRIC COATING: A LIQUID EPOXY COATING SYSTEM PER AWWA C-210 AT 24 MILS MINIMUM DRY FILM THICKNESS (MDFT), OR A COLD APPLIED THREE PART SYSTEM PETROLEUM WAX TAPE PER AWWA C-217, OR A 100% POLYURETHANE COATING OF 24 MILS MDFT SUITABLE FOR BURIED USE.

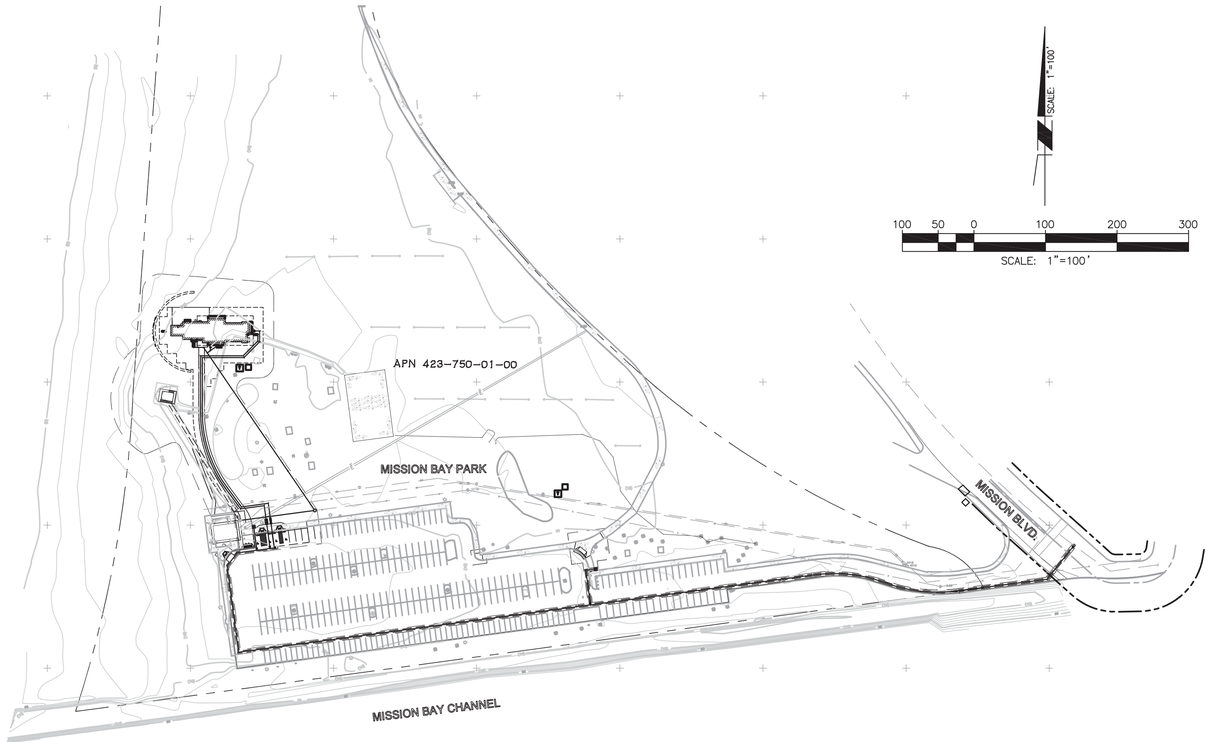

KEY MAP

SCALE: 1"=100'

South Mission Beach Lifeguard Station
700 N. Jetty Road

C-2

RBF CONSULTING
A Baker Company
9755 CLAIREMONT MESA BLVD.
SAN DIEGO, CA. 92124
858-614-5000

SPEC. NO. 8147

REGISTERED PROFESSIONAL ENGINEER
ROBERT R. GEHMAN
No. 45717
Exp. 12/31/14
CIVIL
STATE OF CALIFORNIA

PLANS FOR THE CONSTRUCTION OF

South Mission Beach Lifeguard Station

General Notes C-2

CITY OF SAN DIEGO, CALIFORNIA
ENGINEERING & CAPITAL PROJECTS
ARCHITECTURAL ENGINEERING & CONTRACTS DIVISION
SHEET 8 OF 94 SHEETS

WBS S-00791

APPROVED: _____ FOR CITY ENGINEER

10/13/2014 DATE

SUBMITTED BY: JIHAD SLEIMAN PROJECT MANAGER

DESCRIPTION	BY	APPROVED	DATE	FILMED
ORIGINAL	WH/TT			

YOUSIF BENYAMIN PROJECT ENGINEER

218-1693 CCS27 COORDINATES

1858-6253 CCS83 COORDINATES

CONTRACTOR _____ DATE STARTED _____
INSPECTOR _____ DATE COMPLETED _____

32849-8-D

© COPYRIGHT October 12, 2014 at 7:19PM Plot by ABLACKWOOD File Location: H:\PDATA\2510272\HCADD\LandDiv\Grading\Precise\2729-GR-03.dwg Proprietary design: These drawings and design are protected by common law copyright. All patentable material contained herein and originating with Dominy + Associates Architects @ domusstudio LLP shall be the property of Dominy + Associates Architects @ domusstudio LLP

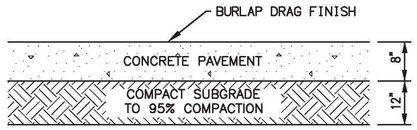

NOTES:

1. CONCRETE SHALL BE MINIMUM 560-B-3250 AND SHALL HAVE A MINIMUM MODULUS OF RUPTURE OF 600 PSI.
2. PAVEMENT JOINTS:
   A. BOTH LONGITUDINAL AND TRANSVERSE DOWELED CONSTRUCTION JOINTS SHALL BE CONSTRUCTED AT 8' INTERVALS (8'x8' SLABS) PER DETAIL C/C-3
   B. DOWELED EXPANSION JOINTS SHALL BE CONSTRUCTED ADJACENT TO BUILDING FOUNDATION PER DETAIL D/C-3
   C. EXPANSION JOINTS SHALL BE CONSTRUCTED ADJACENT TO UTILITY STRUCTURES AND FLOW THROUGH PLANTERS PER DETAIL E/C-3

VEHICULAR CONCRETE PAVEMENT SECTION (A / C-3)
SCALE: NTS

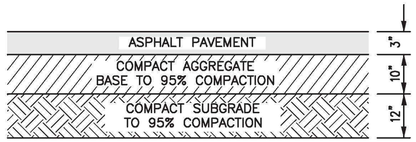

ASPHALT CONCRETE PAVEMENT SECTION (B / C-3)
SCALE: NTS

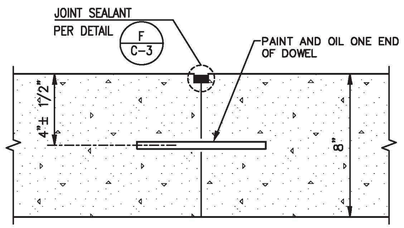

DIMENSIONS AND SPACING OF DOWEL BARS FOR 8" THICK SLAB		
DIA. (d) MIN.	LENGTH	SPACING
1"	16"	12"

VEHICULAR CONCRETE PAVEMENT- DOWELED LONGITUDINAL/ TRANSVERSE CONSTRUCTION JOINT (C / C-3)
SCALE: NTS

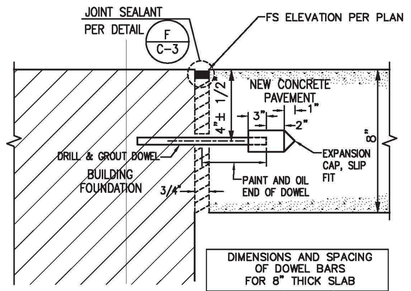

DIMENSIONS AND SPACING OF DOWEL BARS FOR 8" THICK SLAB		
DIA. (d) MIN.	LENGTH	SPACING
1"	16"	12"

VEHICULAR CONCRETE PAVEMENT- DOWELED EXPANSION JOINT AT BUILDING FOUNDATION (D / C-3)
SCALE: NTS

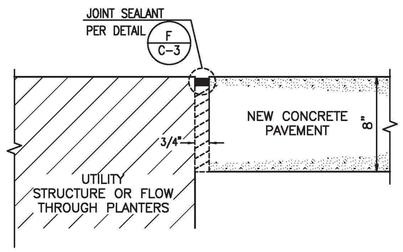

VEHICULAR CONCRETE PAVEMENT- EXPANSION JOINT AT UTILITY STRUCTURE OR FLOW THROUGH PLANTER (E / C-3)
SCALE: NTS

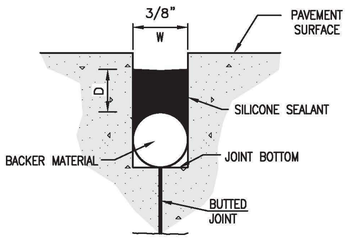

FOR CONSTRUCTION JOINTS

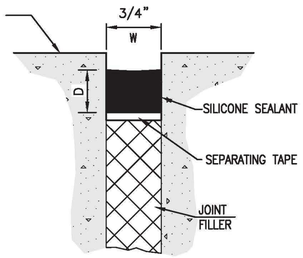

FOR EXPANSION JOINTS

NOTES:

TOP OF SEALANT SHALL BE 1/8" (1/16" MIN., 1/4" MAX.) BELOW TOP OF PAVEMENT

D= DEPTH OF SEALANT 0.5 W FOR SILICONE SEALANT

DIAMETER OF BACKER MATERIAL = W + 1/8"

JOINT SEALANT (F / C-3)
SCALE: NTS

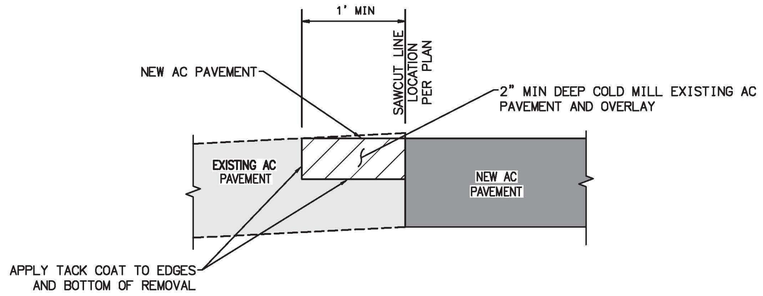

NOTES:

CONTRACTOR TO COLD MILL AS REQUIRED TO PROVIDE SMOOTH TRANSITION FROM EXISTING AC PAVEMENT TO PROPOSED CONCRETE PAVEMENT

SAWCUT / COLDMILL AT EXISTING AC PAVEMENT (G / C-3)
SCALE: NTS

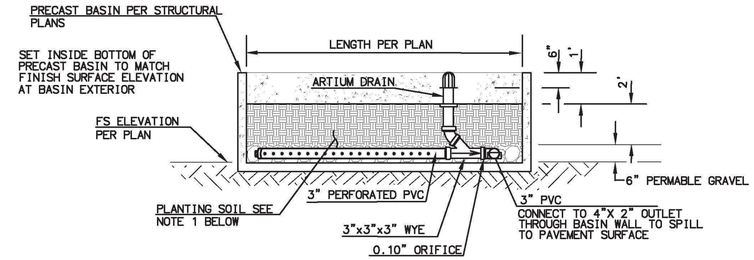

SOIL MEDIA REQUIREMENT NOTE:

1. SOIL MEDIA CONSISTS OF 85% WASHED COURSE SAND, 10% FINES (RANGE: 8-12%; 8% = 2 IN/HR INFILTRATION RATE, 12% = 1 IN/HR INFILTRATION RATE), AND 5% ORGANIC MATTER.
2. THE SAND PORTION SHOULD CONSIST OF CONCRETE SAND (PASSING A 1 1/4" SIEVE). MORTAR SAND (PASSING 1/8" SIEVE) IS ACCEPTABLE AS LONG AS IT IS THOROUGHLY WASHED TO REMOVE THE FINES.
3. FINES SHOULD PASS A #270 (SCREEN SIZE) SIEVE.
4. ORGANIC MATTER (MULCH OR BARK) IS CONSIDERED AN ADDITIVE TO ASSIST VEGETATION IN INITIAL ESTABLISHMENT AND CONTRIBUTES TO SORPTION OF POLLUTANTS BUT GENERALLY SHOULD BE MINIMIZED TO 5%.

MONITORING AND MAINTENANCE NOTE:

1. FLOW THROUGH PLANTERS SHALL BE INSPECTED, CLEANED-OUT, AND WHERE NECESSARY, REPAIRED, AT THE FOLLOWING MINIMUM FREQUENCIES: DURING EACH MONTH BETWEEN OCTOBER 15TH AND APRIL 15TH OF EACH YEAR AND AT LEAST TWICE DURING THE DRY SEASON BETWEEN APRIL 16 AND OCTOBER 14.
2. DEBRIS AND OTHER WATER POLLUTANTS REMOVED FROM FLOW THROUGH PLANTERS DURING CLEAN-OUT SHALL BE CONTAINED AND DISPOSED OF IN A PROPER MANNER.
3. ALL INSPECTION, MAINTENANCE AND CLEAN-OUT ACTIVITIES SHALL BE DOCUMENTED IN AN ANNUAL REPORT SUBMITTED TO THE EXECUTIVE DIRECTOR OF THE COASTAL COMMISSION NO LATER THAN JUNE 30TH OF EACH YEAR. THIS REPORT SHALL BE SUBMITTED FOR THE FIRST THREE YEARS FOLLOWING COMPLETION OF DEVELOPMENT.
4. IT IS THE APPLICANT'S RESPONSIBILITY TO MAINTAIN THE FLOW THROUGH PLANTERS ACCORDING TO SPECIFICATION.

FLOW THROUGH PLANTER (H / C-3)
SCALE: NTS

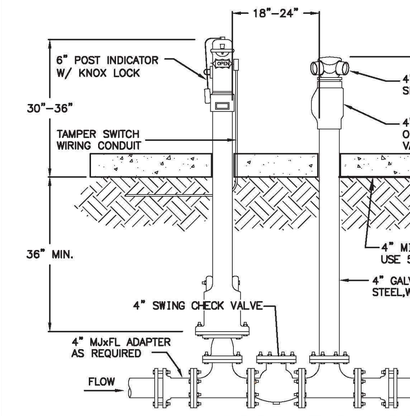

NOTES:

1. 3'X3' CONCRETE SPLASH PADS ARE REQUIRED AT FDC AND PIV
2. FDC AND PIV SHALL BE PAINTED RED.
3. GROUND POSTS ARE REQUIRED WHEN FDC AND/OR PIV LOCATED LESS THAN 4' FROM A CURB
4. THREADED OR BOLTED FLANGED FITTINGS ARE REQUIRED ON FIRE DEPARTMENT CONNECTIONS.
5. CONCRETE THRUST BLOCKING SHALL NOT COVER UNDERGROUND SWING CHECK VALVE INSPECTION
6. REFER TO SITE LAYOUT PLAN FOR PIPE SIZE AND MATERIAL.
7. THRUST BLOCK SHALL BE INSTALLED TO CITY OF SAN DIEGO SPECIFICATIONS.
8. CONCRETE THRUST BLOCKING SHALL NOT COVER UNDERGROUND SWING CHECK VALVE INSPECTION
9. ALL UNDERGROUND FITTINGS TO BE WRAPPED IN 10 MIL. PLASTIC.
10. ALL MATERIALS SHALL BE FM/UL LISTED, AND SHALL BE APPROVED BY THE FIRE MARSHALL PRIOR TO INSTALLATION.

POST INDICATOR VALVE AND FIRE DEPARTMENT CONNECTION (I / C-3)
SCALE: NTS

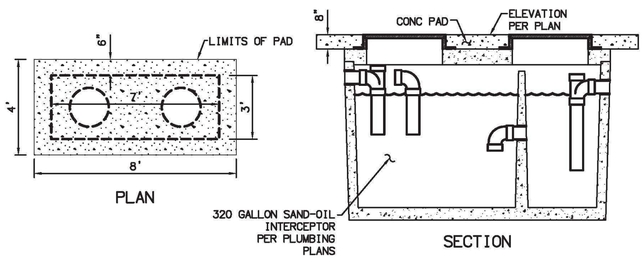

SAND-OIL INTERCEPTOR (J / C-3)
SCALE: NTS

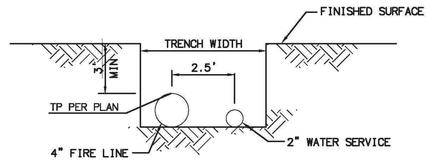

NOTES:

1. SEE SDRSD SDW-110 FOR PIPE BEDDING AND TRENCH BACKFILL.
2. GEOTECHNICAL NOTE: SAND BEARING CAPACITY

   THE CONSTRUCTION OF THE FACILITIES WILL BE TAKING PLACE ON THE BEACH LOCATED SEAWARD OF THE MISSION BEACH BOARDWALK. AS SUCH, THE CONSTRUCTION ACTIVITIES REQUIRED FOR CONSTRUCTION WILL BE TAKING PLACE ON TOP OF FAIRLY CLEAN SANDS WHICH IN THE DRY HAVE POOR NEAR-SURFACE BEARING CAPACITY AND TRENCH EXCAVATION STABILITY DUE TO THE LACK OF FINE CONTENT WITHIN THE SOIL. THUS, CONSTRUCTION ACTIVITIES WILL NEED TO CONSIDER THE POTENTIAL DIFFICULTY OF USING CONSTRUCTION EQUIPMENT WITH STANDARD WHEELS AND THE POTENTIAL FOR CONTINUED DISTURBANCE OF NEAR-SURFACE SOILS. THE CONTRACTOR WILL NEED TO CONSIDER THE POTENTIAL BENEFITS OF USING LOW BEARING PRESSURE EQUIPMENT, PLANKING AND OTHER SURFACE PAVEMENT MATS, THE USE OF WATER AND/OR OTHER APPROVED SOIL STABILIZATION METHODS TO FACILITATE HIS OPERATIONS.

JOINT FIRE AND WATER SERVICE TRENCH (K / C-3)
SCALE: NTS

South Mission Beach Lifeguard Station
700 N. Jetty Road

C-3

RBF CONSULTING
A Baker Company
9755 CLAIREMONT MESA BLVD.
SAN DIEGO, CA. 92124
858-614-5000

SPEC. NO. 8147

REGISTERED PROFESSIONAL ENGINEER — ERNEST R. GERMAN — No. 45717 Exp. 12/31/14 — CIVIL — STATE OF CALIFORNIA

PLANS FOR THE CONSTRUCTION OF

South Mission Beach Lifeguard Station

Details | C-3

CITY OF SAN DIEGO, CALIFORNIA
ENGINEERING & CAPITAL PROJECTS
ARCHITECTURAL ENGINEERING & CONTRACTS DIVISION
SHEET 9 OF 94 SHEETS

WBS S-00791

APPROVED: _____ FOR CITY ENGINEER — DATE 10/13/2014

SUBMITTED BY: JIHAD SLEIMAN, PROJECT MANAGER

DESCRIPTION	BY	APPROVED	DATE	FILMED
ORIGINAL	WH/TT			

YOUSIF BENYAMIN, PROJECT ENGINEER
218-1693
CCS27 COORDINATES
1858-6253
CCS83 COORDINATES

CONTRACTOR _____ DATE STARTED _____
INSPECTOR _____ DATE COMPLETED _____

32849- 9 -D

© COPYRIGHT October 12, 2014 at 7:26PM Plot by ABLACKWOOD File Location: H:\PDATA\2510279\CADD\Land\Civ\Grading\Precise\2729-GR-04.dwg
Proprietary design: These drawings and design are protected by common law copyright. All patentable material contained herein and originating with Dominy + Associates Architects @ domusstudio LLP shall be the property of Dominy + Associates Architects @ domusstudio LLP

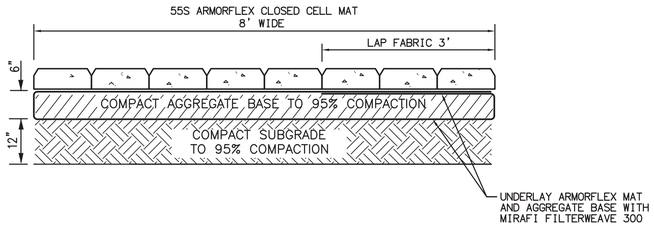

ARMORFLEX CONCRETE MATTRESS SECTION (A / C-4)
SCALE: NTS

NOTE:
1. FOR CONNECTION AT BUILDING FOUNDATION 12" WALL, SEE STRUCTURAL DETAIL 10/S1.4
2. FOR CONNECTION AT BUILDING FOUNDATION 8" WALL, SEE STRUCTURAL DETAIL 11/S1.4
3. FOR CONNECTION AT PLANTER WALL, SEE STRUCTURAL DETAIL 12/S2.1

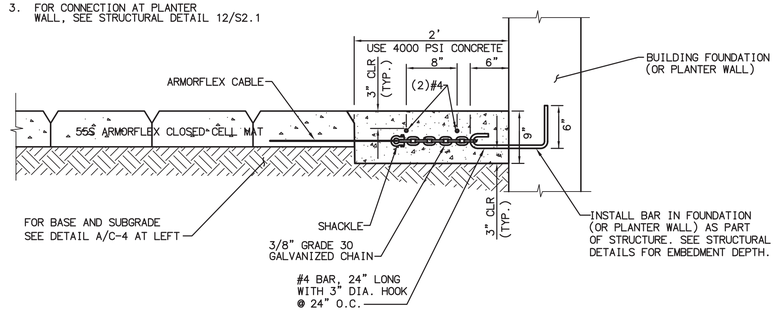

ARMORFLEX CONCRETE MATTRESS BUILDING FOUNDATION CONNECTION DETAIL (B / C-4)
SCALE: NTS

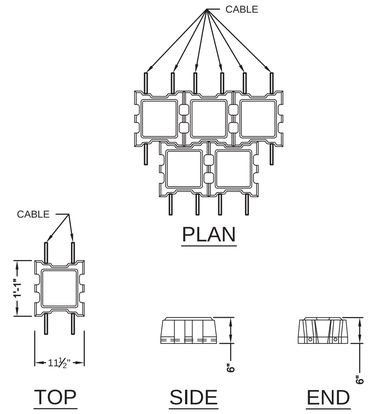

ARMORFLEX 55S BLOCK (C / C-4)
SCALE: NTS

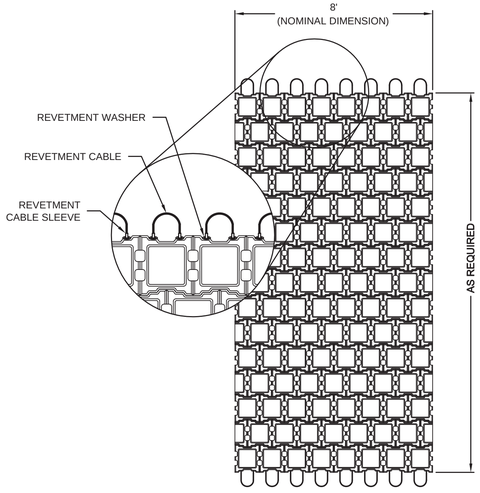

ARMORFLEX 55S MAT (D / C-4)
SCALE: NTS

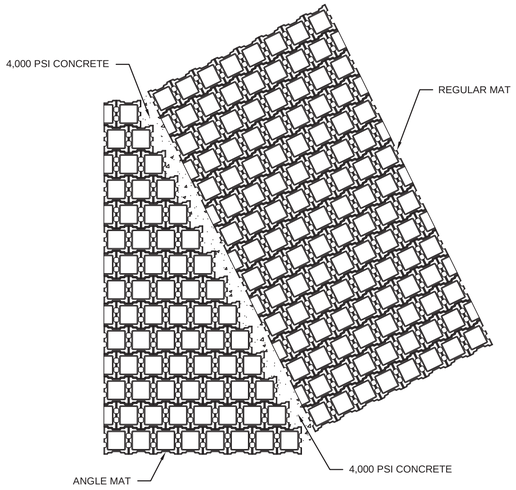

NOTE:
ANGLE MATS WILL BE CONSTRUCTED BY OMITTING THE REQUIRED UNITS SO THE REQUIRED MAT DIMENSIONS CAN BE OBTAINED.

ARMORFLEX 55S ANGLE MAT CONNECTION (E / C-4)
SCALE: NTS

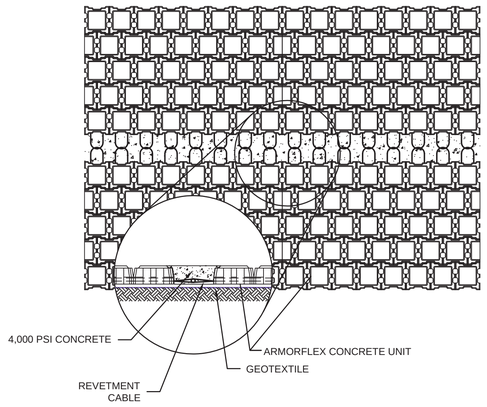

ARMORFLEX 55S MAT TO MAT CONNECTION (F / C-4)
SCALE: NTS

C-4

RBF CONSULTING
A Baker Company
9755 CLAIREMONT MESA BLVD.
SAN DIEGO, CA. 92124
858-614-5000

SPEC. NO. 8147

REGISTERED PROFESSIONAL ENGINEER — ROBERT R. GEORGES — No. 45717 Exp. 12/31/14 CIVIL — STATE OF CALIFORNIA

PLANS FOR THE CONSTRUCTION OF

South Mission Beach Lifeguard Station

Details — C-4

CITY OF SAN DIEGO, CALIFORNIA
ENGINEERING & CAPITAL PROJECTS
ARCHITECTURAL ENGINEERING & CONTRACTS DIVISION
SHEET 10 OF 94 SHEETS

APPROVED: _____ FOR CITY ENGINEER — DATE 10/13/2014

WBS S-00791

SUBMITTED BY: JIHAD SLEIMAN, PROJECT MANAGER

DESCRIPTION	BY	APPROVED	DATE	FILMED
ORIGINAL	WH/TT			

YOUSIF BENYAMIN, PROJECT ENGINEER
218-1693
CCS27 COORDINATES
1858-6253
CCS83 COORDINATES

CONTRACTOR _____ DATE STARTED _____
INSPECTOR _____ DATE COMPLETED _____

32849-10-D

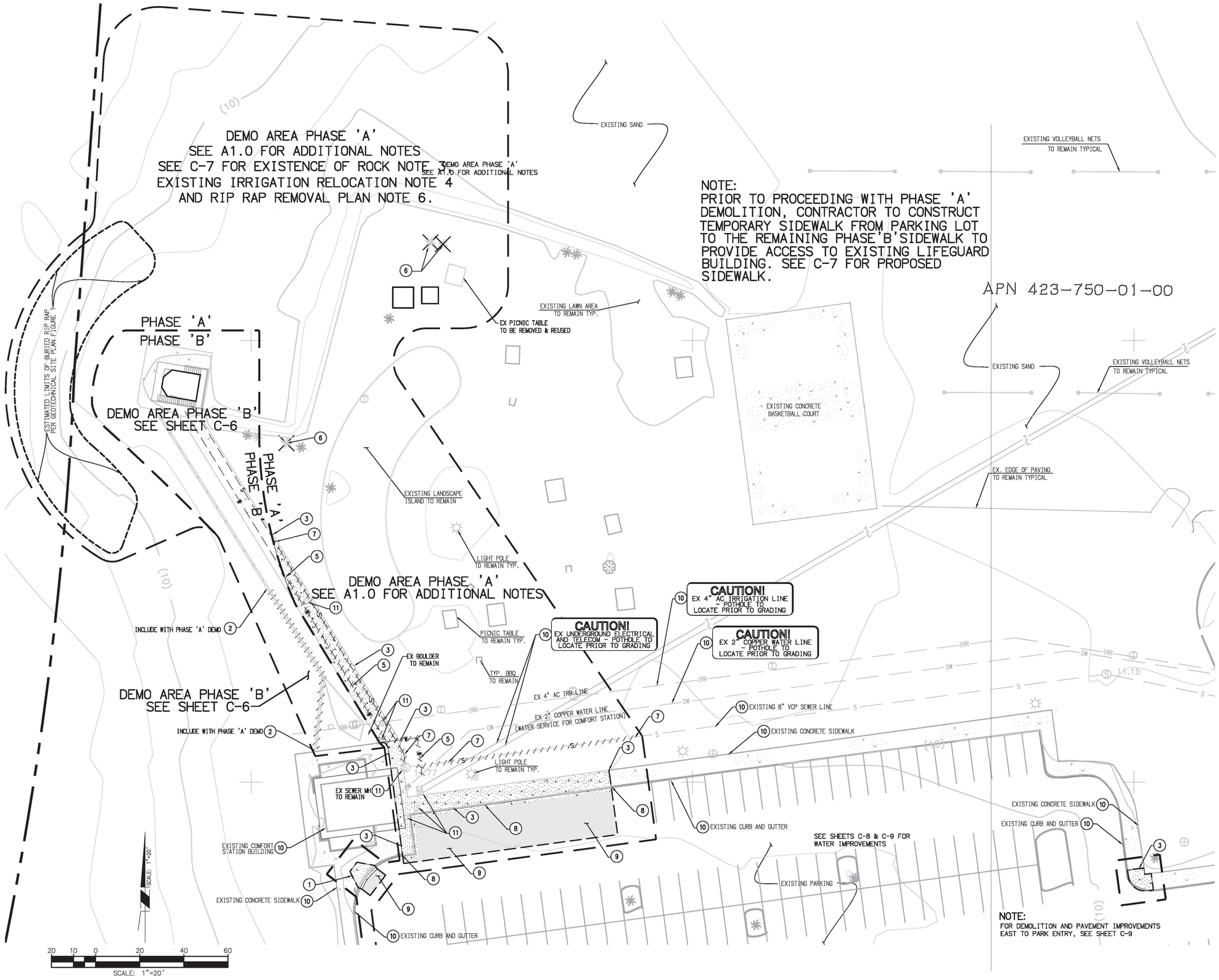

DEMOLITION LEGEND

- SAWCUT LINE
- DEMOLISH AC
- DEMOLISH CONC
- REMOVE EXISTING UTILITY OR STRUCTURE
- LIMIT OF WORK

CONSTRUCTION NOTES

1. SAWCUT AND REMOVE EXISTING PEDESTRIAN RAMP
2. REMOVE EXISTING K-RAIL
3. SAWCUT AND REMOVE EXISTING SIDEWALK PER SDG-156
5. REMOVE EXISTING 1" WATER LINE
6. REMOVE EXISTING TREE
7. REMOVE EXISTING SEWER LINE
8. SAWCUT AND REMOVE EXISTING CURB & GUTTER
9. SAWCUT AND REMOVE EXISTING AC PAVEMENT
10. PROTECT IN PLACE
11. ADJUST EXISTING UTILITY STRUCTURE TO GRADE

DISPOSAL NOTE

ALL REMOVED MATERIALS SHALL BE DISPOSED OF OFFSITE PER SPECIFICATION.

C-5

RBF CONSULTING
A Baker Company
9755 CLAIREMONT MESA BLVD.
SAN DIEGO, CA. 92124
858-614-5000

SPEC. NO. 8147

REGISTERED PROFESSIONAL ENGINEER
ROBERT R. GEHMAN
No. 45717
Exp. 12/31/14
CIVIL
STATE OF CALIFORNIA

PLANS FOR THE CONSTRUCTION OF

South Mission Beach Lifeguard Station

Demolition Plan (Phase A) | C-5

CITY OF SAN DIEGO, CALIFORNIA
ENGINEERING & CAPITAL PROJECTS
ARCHITECTURAL ENGINEERING & CONTRACTS DIVISION
SHEET 11 OF 94 SHEETS

WBS S-00791

APPROVED: [signature] 10/13/2014
FOR CITY ENGINEER DATE

SUBMITTED BY:
JIHAD SLEIMAN
PROJECT MANAGER

DESCRIPTION	BY	APPROVED	DATE	FILMED
ORIGINAL	WH/TT			

YOUSIF BENYAMIN
PROJECT ENGINEER
218-1693
CCS27 COORDINATES
1858-6253
CCS83 COORDINATES

CONTRACTOR _____ DATE STARTED _____
INSPECTOR _____ DATE COMPLETED _____

32849-11-D

South Mission Beach Lifeguard Station
700 N. Jetty Road

Proprietary design: These drawings and design are protected by common law copyright. All patentable material contained herein and originating with Dominy + Associates Architects @ domusstudio LLP shall be the property of Dominy + Associates Architects @ domusstudio LLP
© COPYRIGHT October 12, 2014 at 7:21PM Plot by ABLACKWOOD. File Location: H:\PDATA\251027\29\CADD\Land\DWGrading\Precise\2729-GR-05.dwg

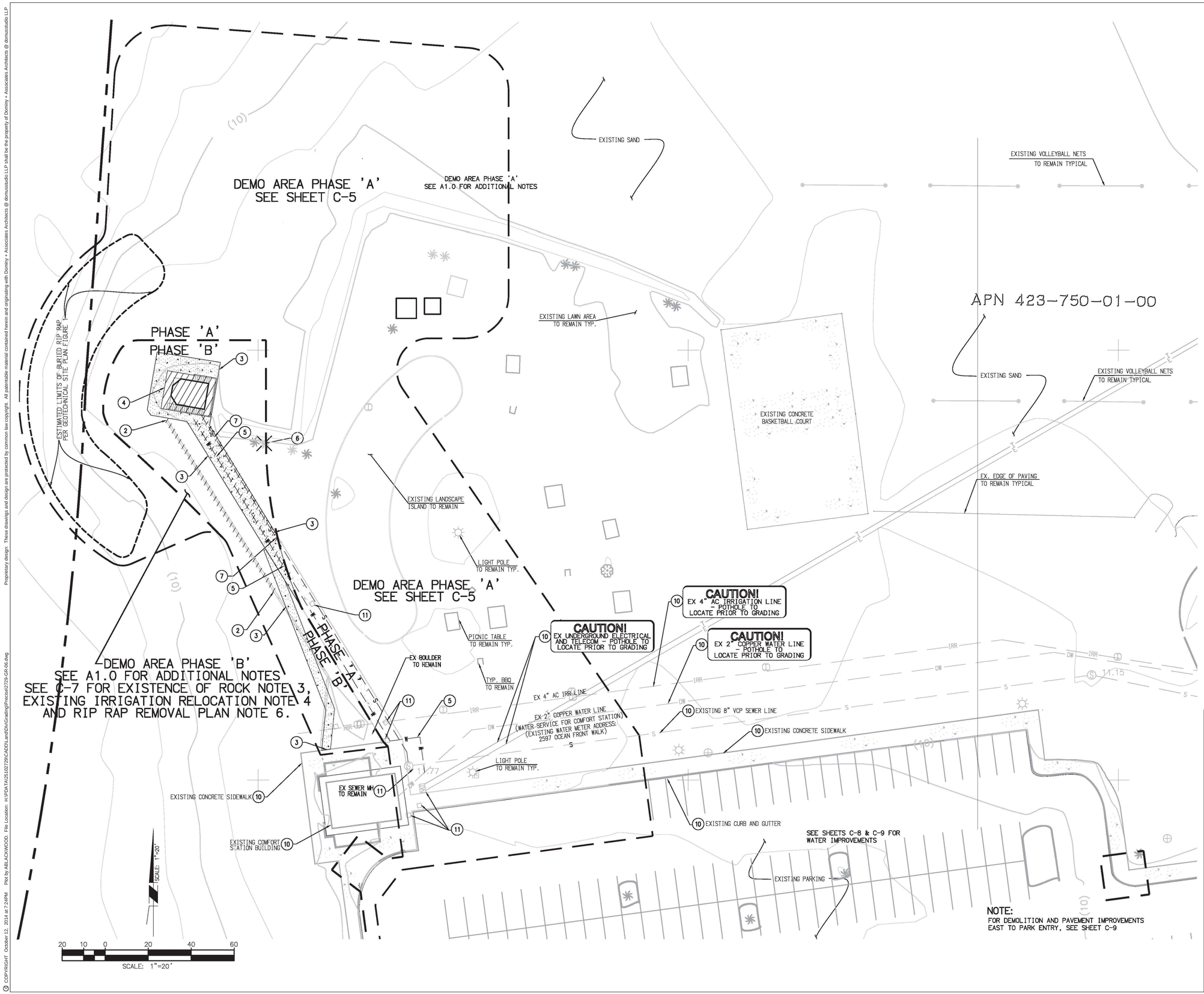

NOTE:
FOR DEMOLITION AND PAVEMENT IMPROVEMENTS
EAST TO PARK ENTRY, SEE SHEET C-9

DEMOLITION LEGEND

- SAWCUT LINE
- DEMOLISH AC
- DEMOLISH CONC
- REMOVE EXISTING UTILITY OR STRUCTURE
- LIMIT OF WORK

CONSTRUCTION NOTES

2. REMOVE EXISTING K-RAIL
3. SAWCUT AND REMOVE EXISTING SIDEWALK PER SDG-156
4. DEMOLISH EXISTING LIFEGUARD TOWER, STORAGE AND ALL APPURTENANCES AFTER COMPLETION OF NEW STATION
5. REMOVE EXISTING 1" WATER LINE
6. REMOVE EXISTING TREE
7. REMOVE EXISTING SEWER LINE
10. PROTECT IN PLACE
11. ADJUST EXISTING UTILITY STRUCTURE TO GRADE

DISPOSAL NOTE

ALL REMOVED MATERIALS SHALL BE DISPOSED OF OFFSITE PER SPECIFICATION.

C-6

RBF CONSULTING
A Baker Company
9755 CLAIREMONT MESA BLVD.
SAN DIEGO, CA. 92124
858-614-5000

SPEC. NO. 8147

REGISTERED PROFESSIONAL ENGINEER
ROBERT R. GEHRKE
No. 45717
Exp. 12/31/14
CIVIL
STATE OF CALIFORNIA

PLANS FOR THE CONSTRUCTION OF
South Mission Beach Lifeguard Station

Demolition Plan (Phase B) | C-6

CITY OF SAN DIEGO, CALIFORNIA
ENGINEERING & CAPITAL PROJECTS
ARCHITECTURAL ENGINEERING & CONTRACTS DIVISION
SHEET 12 OF 94 SHEETS

WBS S-00791

APPROVED: [signature] 10/13/2014
FOR CITY ENGINEER DATE

SUBMITTED BY:
JIHAD SLEIMAN
PROJECT MANAGER

DESCRIPTION	BY	APPROVED	DATE	FILMED
ORIGINAL	WH/TT			

YOUSIF BENYAMIN
PROJECT ENGINEER
218-1693
CCS27 COORDINATES
1858-6253
CCS83 COORDINATES

CONTRACTOR _____ DATE STARTED _____
INSPECTOR _____ DATE COMPLETED _____

32849-12-D

South Mission Beach Lifeguard Station
700 N. Jetty Road

Proprietary design: These drawings and design are protected by common law copyright. All patentable material contained herein and originating with Dominy + Associates Architects @ domusstudio LLP shall be the property of Dominy + Associates Architects @ domusstudio LLP
© COPYRIGHT October 12, 2014 at 7:24PM Plot by ABLACKWOOD. File Location: H:\PDATA\25102729\CADD\Land\DWGrading\Precise\2729-GR-06.dwg

© COPYRIGHT October 12, 2014 at 7:26PM
Proprietary design: These drawings and design are protected by common law copyright. All patentable material contained herein and originating with Dominy + Associates Architects @ domusstudio LLP shall be the property of Dominy + Associates Architects @ domusstudio LLP

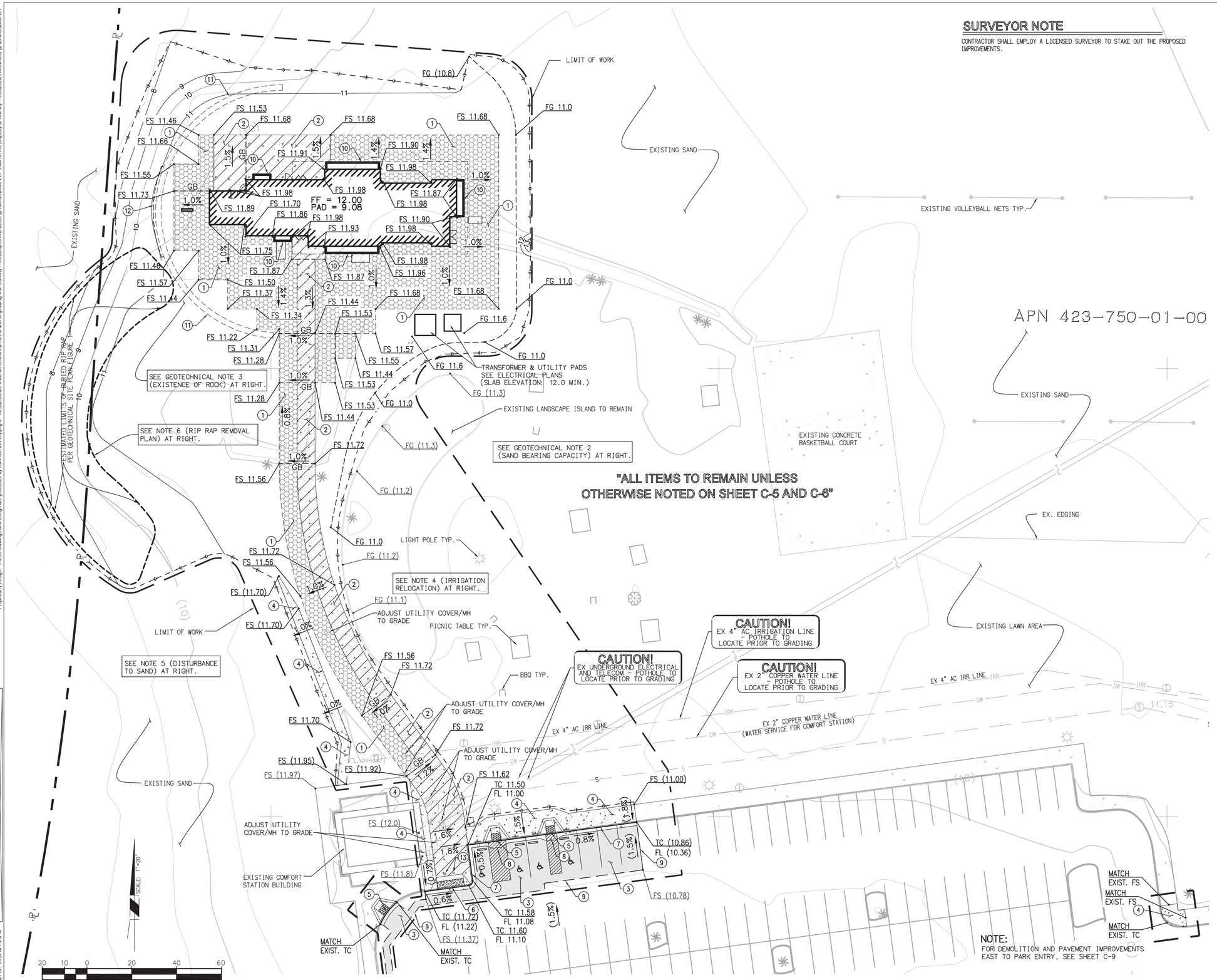

"ALL ITEMS TO REMAIN UNLESS OTHERWISE NOTED ON SHEET C-5 AND C-6"

NOTE:
FOR DEMOLITION AND PAVEMENT IMPROVEMENTS EAST TO PARK ENTRY, SEE SHEET C-9

SURVEYOR NOTE

CONTRACTOR SHALL EMPLOY A LICENSED SURVEYOR TO STAKE OUT THE PROPOSED IMPROVEMENTS.

CONSTRUCTION NOTES

1. CONSTRUCT CONCRETE EROSION CONTROL MAT ARMORFLEX CLASS 55S OR EQUAL PER DETAILS A/C-4 THRU F/C-4
2. CONSTRUCT VEHICULAR CONCRETE PAVEMENT PER DETAIL A/C-3
3. CONSTRUCT ASPHALT CONCRETE PAVEMENT PER DETAIL B/C-3
4. CONSTRUCT CONCRETE SIDEWALK PER SDG-109, SDG-155 AND G-10
5. CONSTRUCT TYPE B PEDESTRIAN RAMP PER SDG-132
6. CONSTRUCT 12' CONCRETE DRIVEWAY PER SDG-159
7. CONSTRUCT 6" CURB AND GUTTER PER SDG-151
8. CONSTRUCT MODIFIED GUTTER 3' WIDE
9. SAWCUT/ COLDMILL AT EXISTING AC PAVEMENT PER DETAIL G/C-3
10. INSTALL FLOW THROUGH PLANTER PER DETAIL H/C-3
11. BELOW GRADE EROSION BARRIER PER STRUCTURAL PLANS
12. CONCRETE CAP PER STRUCTURAL PLANS
13. INSTALL DEMOUNTABLE POST PER M-16

NOTES

1. AREA TO BE GRADED: 44,850 SF (1.03 ACRE)
   FILL QUANTITY: 1,200 CY
   CUT QUANTITY: 1,200 CY

2. GEOTECHNICAL NOTE: SAND BEARING CAPACITY
   THE CONSTRUCTION OF THE FACILITIES WILL BE TAKING PLACE ON THE BEACH LOCATED SEAWARD OF THE MISSION BEACH BOARDWALK. AS SUCH, THE CONSTRUCTION ACTIVITIES REQUIRED FOR CONSTRUCTION WILL BE TAKING PLACE ON TOP OF FAIRLY CLEAN SANDS WHICH IN THE DRY HAVE POOR NEAR-SURFACE BEARING CAPACITY AND TRENCH EXCAVATION STABILITY DUE TO THE LACK OF FINE CONTENT WITHIN THE SOIL. THUS, CONSTRUCTION ACTIVITIES WILL NEED TO CONSIDER THE POTENTIAL DIFFICULTY OF USING CONSTRUCTION EQUIPMENT WITH STANDARD WHEELS AND THE POTENTIAL FOR CONTINUED DISTURBANCE OF NEAR-SURFACE SOILS. THE CONTRACTOR WILL NEED TO CONSIDER THE POTENTIAL BENEFITS OF USING LOW BEARING PRESSURE EQUIPMENT, PLANKING AND OTHER SURFACE PAVEMENT MATS, THE USE OF WATER AND/OR OTHER APPROVED SOIL STABILIZATION METHODS TO FACILITATE HIS OPERATIONS.

3. GEOTECHNICAL NOTE: EXISTENCE OF ROCK
   IT SHOULD BE NOTED THAT ANY OF THE INSTALLATION TECHNIQUES DESCRIBED IN NOTE 2 WILL MEET REFUSAL ON ANY RIP RAP OR DEBRIS LEFT IN PLACE. THE CONTRACTOR SHOULD BE AWARE OF THE POSSIBLE PRESENCE OF EXISTING RIP RAP AND DEBRIS EXTENDING TO AN UNDETERMINED DEPTH ALONG THE SHEET-PILE ALIGNMENT, WHICH WILL REQUIRE REMOVAL PRIOR TO SHEET-PILE INSTALLATION.

   CONTRACTOR SHALL PERFORM PRE-EXCAVATION OF 10 FEET AT SHEET-PILE WALL ALIGNMENT TO LOCATE AND REMOVE RIP RAP. FOR BIDDING, CONTRACTOR SHALL ASSUME 200 TONS OF RIP RAP REQUIRING REMOVAL.

4. EXISTING IRRIGATION RELOCATION:
   A PORTION OF THE EXISTING PARK IRRIGATION SYSTEM FALLS WITHIN THE LIMITS OF THE NEW PAVEMENT. CONTRACTOR SHALL MODIFY THE EXISTING SYSTEM BY RELOCATING SPRINKLER HEADS AND PIPING TO THE NEW LANDSCAPE LIMITS EAST OF THE PROPOSED EDGE OF PAVEMENT.

5. DURING CONSTRUCTION, DISTURBANCE TO SAND AND INTERTIDAL AREAS SHALL BE MINIMIZED TO THE MAXIMUM EXTENT FEASIBLE. ALL EXCAVATED BEACH SAND SHALL BE RE-DEPOSITED ON THE BEACH. LOCAL SAND, COBBLES OR SHORELINE ROCKS SHALL NOT BE USED FOR BACKFILL OR FOR ANY OTHER PURPOSE AS CONSTRUCTION MATERIAL.

6. CONTRACTOR SHALL SUBMIT FOR REVIEW AND AND WRITTEN APPROVAL OF THE EXECUTIVE DIRECTOR OF THE COASTAL COMMISSION A PLAN FOR REMOVAL OF RIP RAP FROM THE BEACH SEAWARD OF THE EXISTING LIFEGUARD STATION (TO BE DEMOLISHED). PLAN SHALL INCLUDE THE FOLLOWING:

   A. REMOVAL FROM THE BEACH OF ALL VISIBLE AND EXTRACTABLE RIP RAP SEAWARD OF THE EXISTING LIFEGUARD STATION WITHIN THE ESTIMATED RIP RAP LIMITS SHOWN. CRITERIA FOR REMOVAL SHALL BE ALL ROCK WITHIN 3 FEET OF THE SURFACE SAND LAYER.

   B. METHOD OF REMOVAL.

   C. SCHEDULE FOR REMOVAL, WITH THE FIRST EXTRACTION TO OCCUR WITHIN 1 YEAR OF ISSUANCE OF THE COASTAL DEVELOPMENT PERMIT. REMOVAL SHALL NOT OCCUR BETWEEN MEMORIAL DAY WEEKEND AND LABOR DAY.

   D. LOCATION OF THE EXPORT SITE. IF WITHIN THE COASTAL ZONE, A SEPARATE COASTAL DEVELOPMENT PERMIT OR PERMIT AMENDMENT MAY BE REQUIRED.

SEE SHEET C-1 FOR LEGEND

C-7

RBF CONSULTING
A Baker Company
9755 CLAIREMONT MESA BLVD.
SAN DIEGO, CA. 92124
858-614-5000

SPEC. NO. 8147

REGISTERED PROFESSIONAL ENGINEER — ROBERT R. ELLINGER — No. 45717 Exp. 12/31/14 — CIVIL — STATE OF CALIFORNIA

PLANS FOR THE CONSTRUCTION OF

South Mission Beach Lifeguard Station

Grading and Drainage Plan | C-7

CITY OF SAN DIEGO, CALIFORNIA
ENGINEERING & CAPITAL PROJECTS
ARCHITECTURAL ENGINEERING & CONTRACTS DIVISION
SHEET 13 OF 94 SHEETS

WBS S-00791

APPROVED: FOR CITY ENGINEER — DATE 10/13/2014

SUBMITTED BY: JIHAD SLEIMAN, PROJECT MANAGER

DESCRIPTION	BY	APPROVED	DATE	FILMED
ORIGINAL	WH/TT			

YOUSIF BENYAMIN, PROJECT ENGINEER
218-1693
CCS27 COORDINATES
1858-6253
CCS83 COORDINATES

CONTRACTOR _____ DATE STARTED _____
INSPECTOR _____ DATE COMPLETED _____

32849-13-D

South Mission Beach Lifeguard Station
700 N. Jetty Road

© COPYRIGHT October 12, 2014 at 7:28PM Plot by ABLACKWOOD. File Location: H:\PDATA\25\10279\CADD\Landdiv\Grading\Precise\2729-GR-08.dwg Proprietary design: These drawings and design are protected by common law copyright. All patentable material contained herein and originating with Dominy + Associates Architects @ domusstudio LLP shall be the property of Dominy + Associates Architects @ domusstudio LLP

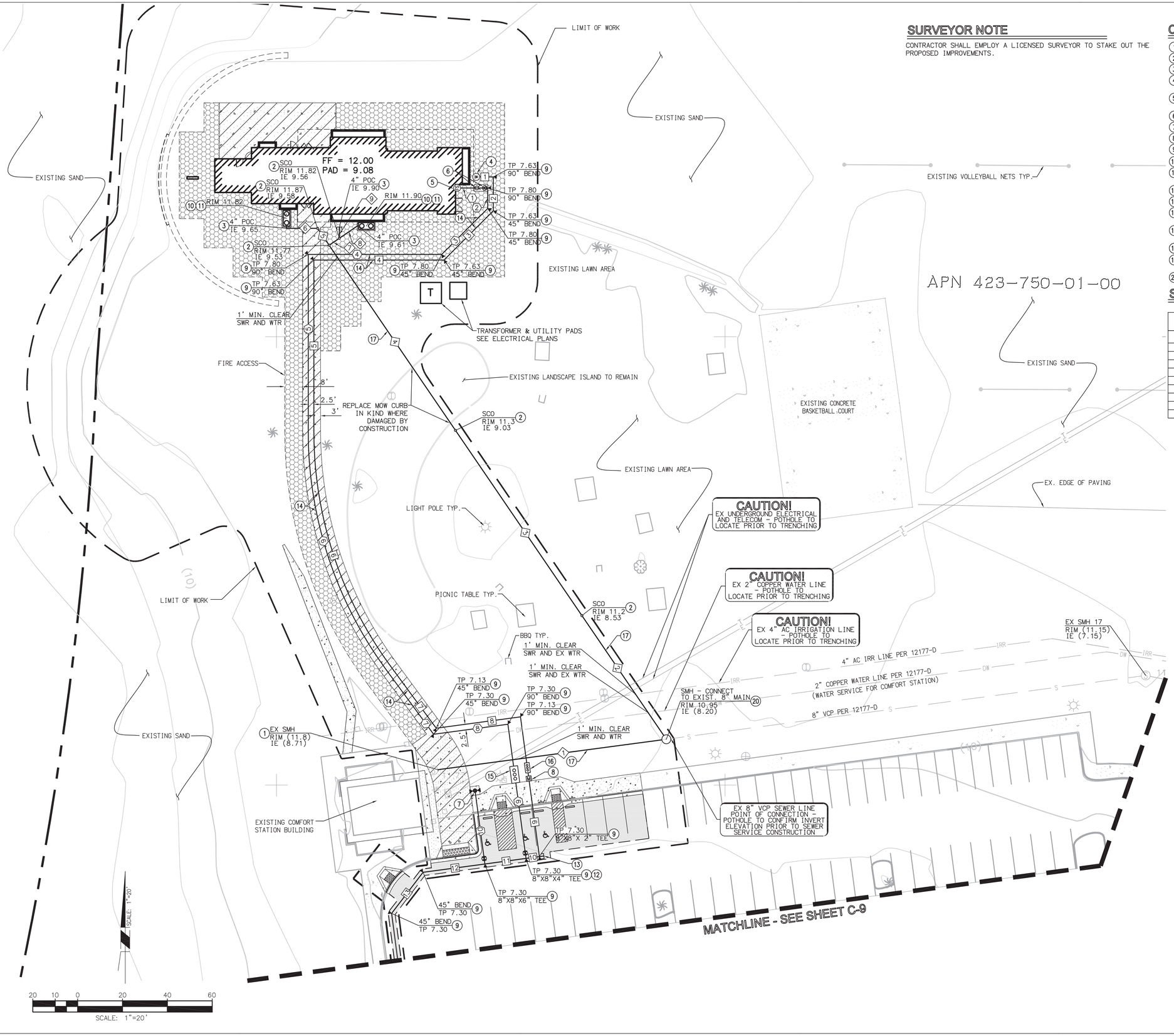

SURVEYOR NOTE

CONTRACTOR SHALL EMPLOY A LICENSED SURVEYOR TO STAKE OUT THE PROPOSED IMPROVEMENTS.

CONSTRUCTION NOTES

1. CONNECT TO EXISTING SEWER MANHOLE PER SDS-108
2. CONSTRUCT SEWER CLEANOUT PER SC-01
3. SEWER POC - SEE PLUMBING PLANS FOR CONTINUATION.
4. 2" DOMESTIC WATER POC - SEE PLUMBING PLANS FOR CONTINUATION.
5. 4" FIRE SERVICE POC - SEE PLUMBING PLANS FOR CONTINUATION.
6. INSTALL FDC AND PIV PER DETAIL I/C-3
7. CONSTRUCT FIRE HYDRANT PER SDW-104
8. INSTALL 1.5" WATER METER IN WATER METER BOX PER SDW-113
9. CONSTRUCT THRUST BLOCK PER SDW-151
10. INSTALL 320 GALLON SAND-OIL INTERCEPTOR PER PLUMBING PLANS
11. INSTALL 8" CONCRETE PAD OVER SEPARATOR PER DETAIL J/C-3
12. INSTALL 4" FIRE SERVICE CONNECTION PER SDW-118
13. CAP NEW WATER LINE
14. INSTALL WATERLINE PER DETAIL K/C-3 AND SDW-110 RESURFACE AC PAVEMENT PER SDG-107
15. INSTALL 4" FIRE SERVICE BACKFLOW PREVENTOR WITH STAINLESS ENCLOSURE PER SDW-105
16. INSTALL 2" BACKFLOW PREVENTOR WITH STAINLESS ENCLOSURE PER SDW-155
17. INSTALL SEWER LATERAL, PIPE BEDDING AND TRENCH BACKFILL PER SDS-110
20. CONSTRUCT SEWER MANHOLE PER SDS-107

SEE SHEET C-1 FOR LEGEND

SEWER LATERAL TABLE (SDR-35)

NO	BEARING/DELTA	RADIUS	LENGTH	SLOPE	NOTE
1	N 82°24'53" E	---	102.77'	0.5%	4" PVC
2	N 34°18'27" W	---	66.78'	0.5%	4" PVC
3	N 34°18'27" W	---	100.00'	0.5%	4" PVC
4	N 34°18'27" W	---	100.00'	0.5%	4" PVC
5	N 34°18'27" W	---	9.12'	0.5%	4" PVC
6	N 90°00'00" E	---	13.80'	0.5%	4" PVC
7	N 55°41'33" E		5.52'	0.5%	4" PVC
8	N 55°41'33" E	---	9.76'	0.5%	4" PVC
9	N 00°00'00" E	---	5.00'	6.8%	4" PVC

WATER DATA TABLE

NO	BEARING/DELTA	RADIUS	LENGTH	NOTE
1	N 90°00'00" E	---	7.64'	2" PVC SCH-80
2	N 00°00'00" E	---	15.09'	2" PVC SCH-80
3	N 45°00'00" E	---	31.07'	2" PVC SCH-80
4	N 90°00'00" E	---	58.03'	2" PVC SCH-80
5	N 00°00'00" E	---	76.61'	2" PVC SCH-80
6	36°18'50"	177.00'	112.18'	2" PVC SCH-80
7	N 36°18'50" W	---	34.04'	2" PVC SCH-80
8	N 82°18'34" E	---	37.92'	2" PVC SCH-80
9	N 07°41'26" W	---	62.90'	2" PVC SCH-80
10	N 82°18'34" E	---	6.00'	8" PVC DR-18
11	N 82°18'34" E		18.50'	8" PVC DR-18
12	N 82°18'34" E	---	27.83'	8" PVC DR-18
13	N 37°23'07" E	---	23.08'	8" PVC DR-18

FIRE DATA TABLE

NO	BEARING/DELTA	RADIUS	LENGTH	NOTE
1	N 90°00'00" E	---	13.64'	4" PVC DR-18
2	N 00°00'00" E	---	9.13'	4" PVC DR-18
3	N 45°00'00" E	---	29.00'	4" PVC DR-18
4	N 90°00'00" E	---	59.50'	4" PVC DR-18
5	N 00°00'00" E	---	79.11'	4" PVC DR-18
6	36°18'50"	179.50'	113.77'	4" PVC DR-18
7	N 36°18'50" W	---	35.52'	4" PVC DR-18
8	N 82°18'34" E	---	33.41'	4" PVC DR-18
9	N 07°41'26" W	---	60.40'	4" PVC DR-18
10	N 07°41'26" W	---	33.00'	6" PVC DR-18

C-8

RBF CONSULTING
A Baker Company
9755 CLAIREMONT MESA BLVD.
SAN DIEGO, CA. 92124
858-614-5000

SPEC. NO. 8147

REGISTERED PROFESSIONAL ENGINEER
ROBERT R. GERMAN
No. 45717
Exp. 12/31/14
CIVIL
STATE OF CALIFORNIA

PLANS FOR THE CONSTRUCTION OF

South Mission Beach Lifeguard Station

Utility Plan C-8

CITY OF SAN DIEGO, CALIFORNIA
ENGINEERING & CAPITAL PROJECTS
ARCHITECTURAL ENGINEERING & CONTRACTS DIVISION
SHEET 14 OF 94 SHEETS

WBS S-00791

APPROVED: FOR CITY ENGINEER — DATE 10/13/2014

SUBMITTED BY: JIHAD SLEIMAN, PROJECT MANAGER

DESCRIPTION	BY	APPROVED	DATE	FILMED
ORIGINAL	WH/TT			

YOUSIF BENYAMIN
PROJECT ENGINEER
218-1693
CCS27 COORDINATES
1858-6253
CCS83 COORDINATES

CONTRACTOR _____ DATE STARTED _____
INSPECTOR _____ DATE COMPLETED _____

32849-14-D

© COPYRIGHT October 12, 2014 at 7:29PM Plot by ABLACKWOOD. File Location: H:\PDATA\25\10\2729\CADD\Landdev\Grading\Precise\c2729-GR-09.dwg Proprietary design: These drawings and design are protected by common law copyright. All patentable material contained herein and originating with Dominy + Associates Architects @ domusstudio LLP shall be the property of Dominy + Associates Architects @ domusstudio LLP

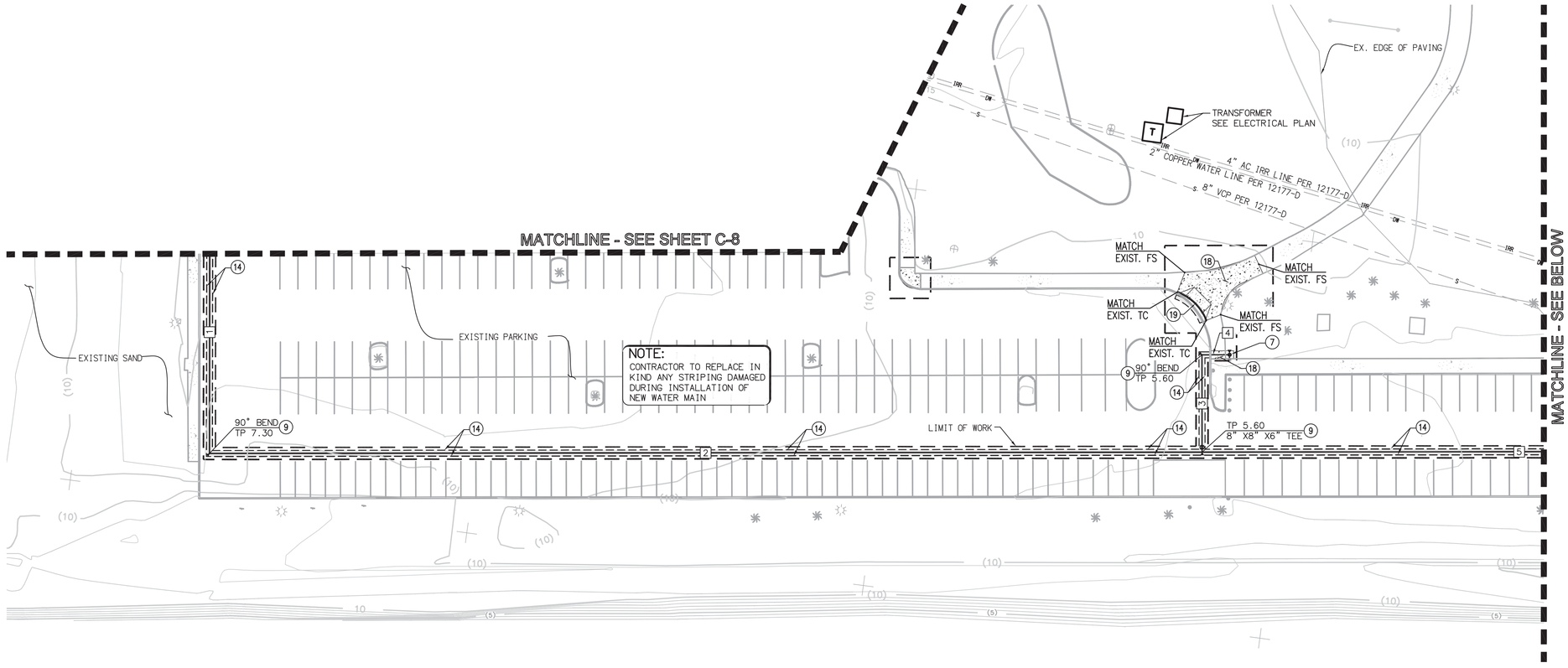

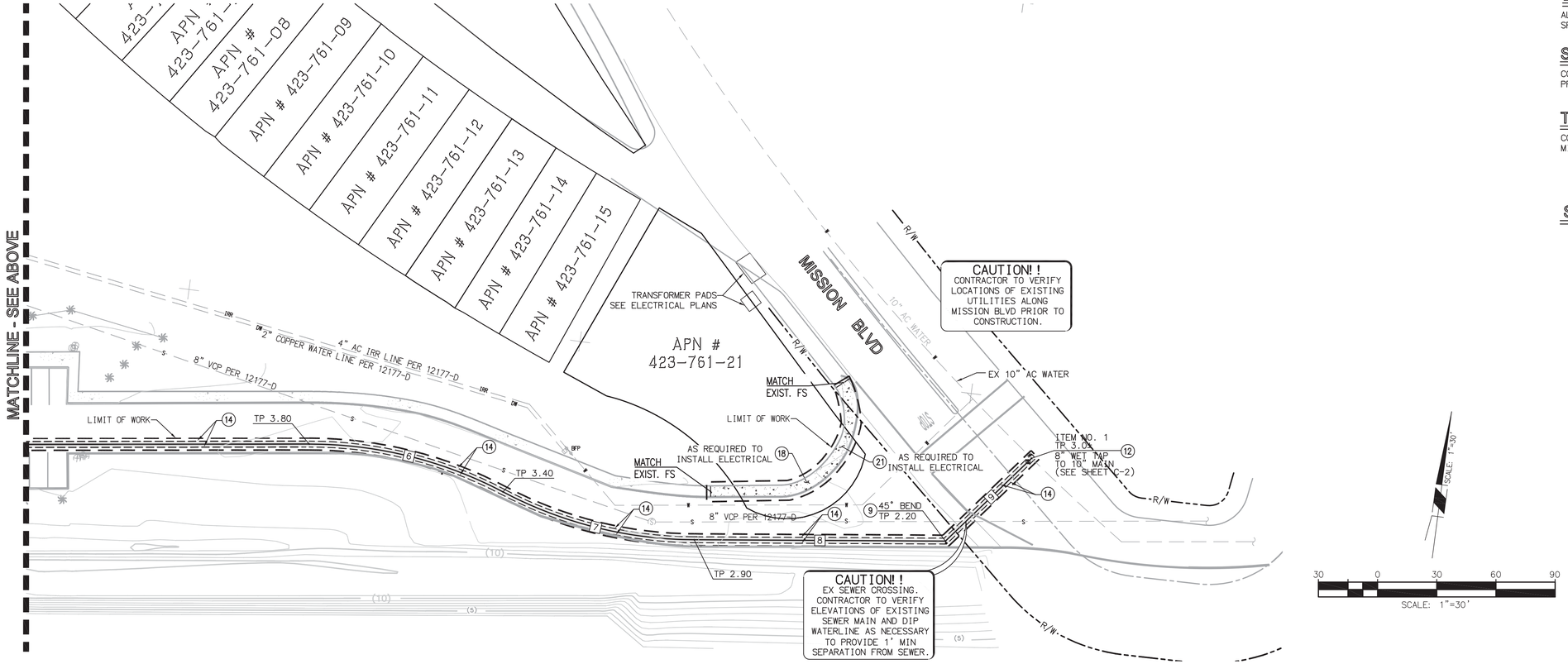

CONSTRUCTION NOTES

(7) CONSTRUCT FIRE HYDRANT PER SDW-104
(9) CONSTRUCT THRUST BLOCK PER SDW-151
(12) INSTALL 8" FIRE SERVICE CONNECTION PER SDW-118
(13) CAP NEW WATER LINE
(14) INSTALL WATER MAIN PER SDW-110
RESURFACE AC PAVEMENT PER SDG-107
(18) SAWCUT AND REMOVE EXIST CONCRETE SIDEWALK PER SDG-156
CONSTRUCT NEW CONCRETE SIDEWALK PER SDG-109, SDG-155 AND G-10
(19) SAWCUT AND REMOVE EXIST. DRIVEWAY
CONSTRUCT NEW 12' CONCRETE DRIVEWAY PER SDG-159
(21) RECORD EXISTING CURB RAMP ELEVATIONS AND HORIZONTAL LOCATION. SAWCUT AND REMOVE EXIST. CURB RAMP. CONSTRUCT NEW CURB RAMP - TYPE C1 PER SDG-134 TO MATCH EXISTING RAMP THAT WAS REMOVED.

WATER DATA TABLE

NO	BEARING/DELTA	RADIUS	LENGTH	DESCRIPTION
1	N 07°30'31" W	--	121.43'	8" PVC DR-18
2	N 82°20'50" E	--	496.30'	8" PVC DR-18
3	N 07°39'10" W		48.72'	6" PVC DR-18
4	N 82°20'50" E		13.83'	6" PVC DR-18
* 5	N 82°20'50" E	--	314.43'	8" PVC DR-18
* 6	27°53'32"	210.00'	102.23'	8" PVC DR-14
* 7	27°31'06"	210.00'	100.86'	8" PVC DR-14
* 8	N 82°43'16" E	--	127.35'	8" PVC DR-18
* 9	N 38°33'32" E	--	60.61'	8" PVC DR-18

* GROUNDWATER NOTE:
CONTRACTOR MAY ENCOUNTER GROUNDWATER DURING TRENCH EXCAVATION FOR THIS SEGMENT OF THE WATER MAIN. CONTRACTOR SHALL FILTER FABRIC WRAP THE 6" THICK SECTION OF PIPE BEDDING MATERIAL TO STABILIZE THE BOTTOM OF TRENCH PRIOR TO INSTALLATION OF THE PIPE. SEE GEOTECHNICAL GROUNDWATER NOTE BELOW FOR ADDITIONAL INFORMATION.

NOTES

1. GEOTECHNICAL NOTE: GROUNDWATER
DEPENDING UPON THE DEPTH OF EXCAVATION, THE CONTRACTOR MAY ENCOUNTER GROUNDWATER. GROUNDWATER LEVELS ARE RELATED TO OCEAN TIDES. CONTRACTOR SHOULD HAVE TIDE TABLES AVAILABLE TO HELP ASSESS THE LIKELIHOOD OF ENCOUNTERING GROUNDWATER. CONTRACTOR SHOULD NOTE THAT 6 PLUS HOURS AFTER A TIDAL HIGH, THE GROUNDWATER WILL BE AT ITS LOWEST LEVEL FACILITATING UTILITY/ EXCAVATION WORK. CONTRACTOR MAY NEED TO STABILIZE BOTTOM OF EXCAVATIONS DUE TO HIGH GROUNDWATER. ONE METHOD OF STABILIZATION INCLUDES THE USE OF FILTER FABRIC WRAPPED PIPE BEDDING MATERIAL OR 3/4 INCH GRAVEL.

DISPOSAL NOTE

ALL REMOVED MATERIALS SHALL BE DISPOSED OF OFFSITE PER SPECIFICATION.

SURVEYOR NOTE

CONTRACTOR SHALL EMPLOY A LICENSED SURVEYOR TO STAKE OUT THE PROPOSED IMPROVEMENTS.

TRAFFIC CONTROL NOTE

CONTRACTOR SHALL OBTAIN A TRAFFIC CONTROL PERMIT FOR WORK IN MISSION BOULEVARD AND PARKING LOT.

SEE SHEET C-1 FOR LEGEND

C-9

RBF CONSULTING
A Baker Company
9755 CLAIREMONT MESA BLVD.
SAN DIEGO, CA. 92124
858-614-5000

SPEC. NO. 8147

REGISTERED PROFESSIONAL ENGINEER — ROBERT R. GERACI — No. 45717 Exp. 12/31/14 — CIVIL — STATE OF CALIFORNIA

PLANS FOR THE CONSTRUCTION OF

South Mission Beach Lifeguard Station

Utility Plan | C-9

CITY OF SAN DIEGO, CALIFORNIA
ENGINEERING & CAPITAL PROJECTS
ARCHITECTURAL ENGINEERING & CONTRACTS DIVISION
SHEET 15 OF 94 SHEETS

WBS S-00791

APPROVED: FOR CITY ENGINEER — DATE 10/13/2014

SUBMITTED BY: JIHAD SLEIMAN, PROJECT MANAGER

DESCRIPTION	BY	APPROVED	DATE	FILMED
ORIGINAL	WH/TT			

YOUSIF BENYAMIN, PROJECT ENGINEER
218-1693
CCS27 COORDINATES
1858-6253
CCS83 COORDINATES

CONTRACTOR _____ DATE STARTED _____
INSPECTOR _____ DATE COMPLETED _____

32849-15-D

© COPYRIGHT October 12, 2014 at 7:31PM Plot by ABLACKWOOD File Location: H:\PDATA\25102729\CADD\Land\DWG\Grading\Precise\2729-GR-10.dwg Proprietary design: These drawings and design are protected by common law copyright. All patentable material contained herein and originating with Dominy + Associates Architects @ domusstudio LLP shall be the property of Dominy + Associates Architects @ domusstudio LLP

BMP REQUIREMENTS

1. NO CONSTRUCTION MATERIALS, DEBRIS, OR WASTE SHALL BE PLACED OR STORED IN A MANNER WHERE IT MAY BE SUBJECT TO WAVE, WIND, RAIN OR TIDAL EROSION AND DISPERSION.

2. ANY AND ALL REFUSE AND DEBRIS RESULTING FROM CONSTRUCTION AND DEMOLITION ACTIVITIES SHALL BE REMOVED FROM THE PROJECT SITE WITHIN 72 HOURS OF COMPLETION OF DEMOLITION AND CONSTRUCTION. CONSTRUCTION AND DEMOLITION DEBRIS AND SEDIMENT SHALL BE REMOVED FROM OR CONTAINED AND SECURED WITHIN WORK AREAS EACH DAY THAT CONSTRUCTION OR DEMOLITION OCCURS TO PREVENT THE ACCUMULATION OF SEDIMENT AND OTHER DEBRIS THAT COULD BE DISCHARGED INTO COASTAL WATERS. ALL DEMOLITION DEBRIS, CONSTRUCTION DEBRIS AND OTHER WASTE MATERIALS REMOVED FROM THE PROJECT SITE SHALL BE DISPOSED OF OR RECYCLED IN COMPLIANCE WITH LOCAL, STATE AND FEDERAL REGULATIONS. NO DEBRIS OR OTHER WASTE MATERIALS SHALL BE PLACED IN COASTAL WATERS OR BE ALLOWED TO MOVE INTO COASTAL WATERS. IF A DISPOSAL SITE IS LOCATED IN THE COASTAL ZONE, A COASTAL DEVELOPMENT PERMIT OR AN AMENDMENT TO THE PROJECT COASTAL DEVELOPMENT SHALL BE REQUIRED BEFORE DISPOSAL CAN TAKE PLACE.

3. EROSION AND SEDIMENT BEST MANAGEMENT PRACTICES (BMP'S) SHALL BE USED TO CONTROL DUST AND SEDIMENTATION IMPACTS TO COASTAL WATERS DURING CONSTRUCTION AND DEMOLITION ACTIVITIES. BMP'S SHALL INCLUDE, BUT ARE NOT LIMITED TO PLACEMENT OF GRAVEL BAGS AROUND DRAINAGE INLETS TO PREVENT SEDIMENT TRANSPORT INTO THE STORM DRAIN SYSTEM AND PACIFIC OCEAN.

4. ALL CONSTRUCTION MATERIALS, EXCLUDING LUMBER, SHALL BE COVERED AND ENCLOSED ON ALL SIDES AND KEPT AS FAR AWAY FROM A STORM DRAIN INLET AND RECEIVING WATERS AS POSSIBLE.

5. DEVELOP AND IMPLEMENT SPILL PREVENTION AND CONTROL MEASURES AND ENSURE THE PROPER HANDLING, STORAGE AND APPLICATION OF PETROLEUM PRODUCTS AND OTHER CONSTRUCTION MATERIALS. THESE SHALL INCLUDE A DESIGNATED FUELING AND VEHICLE MAINTENANCE AREA WITH APPROPRIATE BERMS AND PROTECTION TO PREVENT ANY SPILLAGE OF GASOLINE OR RELATED PETROLEUM PRODUCTS OR CONTACT WITH RUNOFF. THE FUELING AND MAINTENANCE AREA SHALL BE LOCATED AS FAR AWAY FROM THE RECEIVING WATERS AND STORM DRAIN INLETS AS POSSIBLE AND SHALL NOT BE LOCATED ON THE BEACH IF AT ALL POSSIBLE. IF FUELING OR MAINTENANCE IS PROPOSED TO BE ON THE BEACH THEN THE CONTRACTOR AND APPLICANT SHALL SUBMIT A PLAN TO THE EXECUTIVE DIRECTOR OF THE COASTAL COMMISSION SHOWING HOW THERE IS ESSENTIALLY NO POSSIBILITY OF CONTAMINATING BEACH MATERIALS THROUGH THOSE OPERATIONS.

6. MAINTAIN AND WASH EQUIPMENT AND MACHINERY IN CONFINED AREAS SPECIFICALLY DESIGNED TO CONTROL RUNOFF. THINNERS OR SOLVENTS SHALL NOT BE DISCHARGED INTO SANITARY OR STORM DRAIN SYSTEMS. WASHOUT FROM CONCRETE TRUCKS SHALL BE DISPOSED OF AT A CONTROLLED LOCATION NOT SUBJECT TO RUNOFF INTO COASTAL WATERS AND MORE THAN FIFTY FEET AWAY FROM A STORM DRAIN, OPEN DITCH OR SURFACE WATERS.

7. PROVIDE AND MAINTAIN ADEQUATE DISPOSAL FACILITIES FOR SOLID WASTE INCLUDING EXCESS CONCRETE PRODUCED DURING CONSTRUCTION.

8. PROVIDE AND MAINTAIN TEMPORARY SEDIMENT BASINS (INCLUDING DEBRIS BASINS, DESILTING BASINS OR SILT TRAPS), TEMPORARY DRAINS AND SWALES, GRAVEL BAG BARRIERS, WIND BARRIERS SUCH AS SOLID BOARD FENCE OR HAY BALES AND SILT FENCING.

9. STABILIZE ANY STOCKPILED FILL WITH GEOFABRIC COVERS OR OTHER APPROPRIATE COVER AND CLOSE AND STABILIZE OPEN TRENCHES AS SOON AS POSSIBLE.

10. PRIOR TO FINAL INSPECTION OF THE PROPOSED PROJECT, THE CONTRACTOR SHALL ENSURE THAT NO GASOLINE, LUBRICANT OR OTHER PETROLEUM-BASED PRODUCT WAS DEPOSITED ON THE BEACH OR AT ANY BEACH FACILITY. IF SUCH RESIDUES ARE DISCOVERED, THE RESIDUES AND ALL CONTAMINATED SAND SHALL BE REPORTED TO THE EXECUTIVE DIRECTOR OF THE COASTAL COMMISSION IN ORDER TO DETERMINE IF THE REMOVAL AND DISPOSAL OF THE CONTAMINATED MATTER SHALL REQUIRE A PERMIT AMENDMENT PURSUANT TO THE REQUIREMENTS OF THE COASTAL ACT AND THE CALIFORNIA CODE OF REGULATIONS.

WPCP NOTES

1. DISCHARGING SEDIMENT-LADEN WATER WHICH WILL CAUSE OR CONTRIBUTE TO AN EXCEEDANCE OF THE APPLICABLE RWQCB'S BASIN PLANS FROM A DEWATERING SITE OR SEDIMENT BASIN/TRAP INTO ANY RECEIVING WATER OR STORM DRAIN WITHOUT FILTRATION OR EQUIVALENT TREATMENT IS PROHIBITED.

2. THE DISCHARGER SHALL AMEND THE WPCP WHENEVER THERE IS A CHANGE IN CONSTRUCTION OR OPERATIONS, WHICH MAY AFFECT THE DISCHARGE OF POLLUTANTS TO SURFACE WATERS, GROUNDWATER, OR A MUNICIPAL STORM DRAIN SYSTEM. THE WPCP SHALL ALSO BE AMENDED IF THE DISCHARGER VIOLATES ANY CONDITION OF THE GENERAL PERMIT OR HAS NOT ACHIEVED THE GENERAL OBJECTIVE OF REDUCING OR ELIMINATING POLLUTANTS IN STORM WATER DISCHARGES. ALL AMENDMENTS SHOULD BE DATED AND DIRECTLY ATTACHED TO THE WPCP.

3. TEMPORARY ON-SITE DRAINAGE TO CARRY CONCENTRATED FLOW SHALL BE SELECTED TO COMPLY WITH CITY REQUIREMENTS TO CONTROL EROSION, TO RETURN FLOWS TO THEIR NATURAL DRAINAGE COURSES, AND TO PREVENT DAMAGE TO DOWNSTREAM PROPERTIES.

4. DISCHARGES ORIGINATING OFF-SITE, WHICH FLOW ACROSS OR THROUGH AREAS DISTURBED BY CONSTRUCTION THAT MAY CONTAIN POLLUTANTS, SHOULD BE REPORTED TO THE RWQCB.

5. SEDIMENT CONTROL BMP'S ARE REQUIRED AT APPROPRIATE LOCATIONS ALONG THE SITE PERIMETER AND AT ALL OPERATIONAL INTERNAL INLETS TO THE STORM DRAIN SYSTEM AT ALL TIMES.

6. THE CONTRACTOR IS RESPONSIBLE FOR ENSURING THAT ADEQUATE SEDIMENT CONTROL MATERIALS ARE AVAILABLE TO CONTROL SEDIMENT DISCHARGES AT THE DOWNGRADE PERIMETER AND OPERATIONAL INLETS (WEATHER AND STORM PREDICTIONS CAN BE OBTAINED BY CALLING THE NATIONAL WEATHER SERVICE AT (858) 675-8700 OR BY VISITING THE NATIONAL WEATHER SERVICE WEB SITE AT HTTP://WWW.WRH.NOAA.GOV/SANDIEGO/INDEX.SHTML. FOR WEATHER INFORMATION AND CURRENT SATALITE/RADAR FEEDS).

7. THE OUTLETS OF ALL SEDIMENT BASINS, TRAPS, AND LOCATIONS OF ARTIFICIALLY CONCENTRATED FLOW SHALL BE PROVIDED WITH OUTLET PROTECTION TO PREVENT EROSION AND SCOUR.

8. INSPECTIONS SHALL BE PERFORMED BEFORE AND AFTER STORM EVENTS AND ONCE EACH 24-HOUR PERIOD DURING EXTENDED STORM EVENTS TO IDENTIFY BMP EFFECTIVENESS AND IMPLEMENT REPAIRS OR DESIGN CHANGES AS SOON AS FEASIBLE, DEPENDING ON FIELD CONDITIONS. EQUIPMENT, MATERIALS, AND WORKERS MUST BE AVAILABLE FOR RAPID RESPONSE TO FAILURES AND EMERGENCIES. ALL CORRECTIVE MAINTENANCE TO BMP'S SHALL BE PERFORMED AS SOON AS POSSIBLE AFTER THE CONCLUSION OF EACH STORM, DEPENDING UPON WORKER SAFETY.

9. FOR EACH INSPECTION, A QUALIFIED PERSON SHALL COMPLETE AN INSPECTION CHECKLIST CONTAINING THE FOLLOWING MINIMUM INFORMATION: INSPECTION DATE, WEATHER INFORMATION (BEGINNING/END OF STORM EVENT, DURATION, TIME SINCE LAST STORM, APPROXIMATE RAINFALL IN INCHES), DESCRIPTION OF INADEQUATE BMP'S, LIST OF OBSERVATIONS OF ALL BMP'S AND VISIBLE INSPECTION OF OUTFALLS, DISCHARGE POINTS, DOWNSTREAM LOCATIONS, AND PROJECTED REQUIRED MAINTENANCE ACTIVITIES, CORRECTIVE ACTIONS REQUIRED, INCLUDING CHANGES TO THE WPCP AND IMPLEMENTATION DATES, INSPECTOR'S NAME, TITLE, SIGNATURE, AND QUALIFICATIONS

10. INDIVIDUALS RESPONSIBLE FOR WPCP, IMPLEMENTATION, AND PERMIT COMPLIANCE SHALL BE APPROPRIATELY TRAINED. THIS INCLUDES THOSE PERSONNEL RESPONSIBLE FOR INSTALLATION, INSPECTION, MAINTENANCE, AND REPAIR OF BMP'S. THOSE RESPONSIBLE FOR OVERSEEING, REVISING, AND AMENDING THE WPCP SHALL ALSO DOCUMENT THEIR TRAINING. THE QUALIFIED PERSON SHALL ATTEND THE PRE-CONSTRUCTION MEETING. THE QUALIFIED PERSON SHALL HAVE KNOWLEDGE AND TRAINING OF THE INTENT AND ENFORCEMENT OF WPCP'S AND BMP'S AND BE PROPERLY TRAINED TO CONDUCT INSPECTIONS AND PREPARE REPORTS OF THE CONSTRUCTION SITE WITH RESPECT TO THE CITY'S MUNICIPAL CODE/ORDINANCES AND THE WPCP.

11. THE CONTRACTOR SHALL MAINTAIN A COPY OF THE WPCP AT THE CONSTRUCTION SITE, WHICH SHALL BE PROVIDED, UPON REQUEST, TO THE RWQCB OR CITY PERSONNEL. THE WPCP IS CONSIDERED A REPORT THAT SHALL BE AVAILABLE TO THE PUBLIC BY THE RWQCB UNDER SECTION 308(B) OF THE CLEAN WATER ACT.

12. RECORDS OF ALL INSPECTIONS, COMPLIANCE CERTIFICATIONS, NONCOMPLIANCE REPORTING, WPCP AND ANY OTHER DOCUMENTS GENERATED AS PART OF WPCP, MUST BE RETAINED FOR A PERIOD OF AT LEAST THREE YEARS FROM THE DATE GENERATED.

13. A CONCRETE WASHOUT SHALL BE INSTALLED FOR ALL PROJECTS THAT PROPOSE CONCRETE TO BE MIXED ON SITE OR DELIVERED FROM A BATCH PLANT. THE CONCRETE WASHOUT SHALL BE LOCATED A MINIMUM OF 50' FROM ANY DRAINAGE INFRASTRUCTURE OR NATURAL DRAINAGE FEATURES OR WATER BODIES AND INCORPORATE AN IMPERMEABLE LINER (6 MIL MIN) TO CONTAIN THE REQUIRED VOLUME. ALL DRIED CONCRETE WASTE SHALL BE BROKEN INTO MANAGEABLE PIECES AND DISPOSED OF IN A PROPER MANNER. THE CONTRACTOR OR QUALIFIED PERSON SHALL LOCATE CONCRETE WASHOUTS IN THIS PRESCRIBED MANNER AS CONSTRUCTION PROGRESSES.

14. THE QUALIFIED PERSON SHALL CONDUCT REGULAR INSPECTIONS OF THE PROJECT SITE IN ACCORDANCE WITH RECOMMENDATIONS OUTLINED IN THE WPCP. EACH INSPECTION SHALL BE DOCUMENTED IN THE FORM OF WRITTEN REPORTS RETAINED ON-SITE. ALL REPORTS SHALL BE MADE AVAILABLE TO THE CITY OF SAN DIEGO AND RWQCB REPRESENTATIVES UPON REQUEST.

15. THE CONTRACTOR SHALL HAVE EMERGENCY MATERIALS AND EQUIPMENT ON HAND FOR UNFORESEEN SITUATIONS, SUCH AS DAMAGE TO UNDERGROUND WATER AND SEWER UTILITIES WHEREBY FLOWS MAY GENERATE EROSION AND SEDIMENT POLLUTION.

16. SEDIMENT AND EROSION CONTROLS MAY BE REMOVED ONLY WHEN CONTRIBUTORY UPSTREAM AREAS BECOME STABILIZED OR ARE MANAGED UPSTREAM (I.E., SINGLE-LOT SEDIMENT CONTROLS) AND AS LONG AS SEDIMENT LADEN RUNOFF WILL NOT DISCHARGE FROM THE SITE.

17. WHEN FUTURE WORK BY THE DEVELOPER NOT SHOWN ON THIS PLAN IS TO BE PERFORMED, THE WPCP SHALL BE AMENDED TO INCLUDE SAID WORK AND ANY ADDITIONAL WATER QUALITY CONTROL MEASURES REQUIRED.

18. WHEN OWNERSHIP CHANGES FOR PORTIONS OF THE SITE OR THE LIMITS OR NATURE OF WORK ARE ALTERED, THE DEVELOPER SHALL FILE A CHANGE OF INFORMATION (COI) OR A REVISED NOTICE OF INTENT (NOI), RESPECTIVELY, WITH THE RWQCB AND SWRCB, RESPECTIVELY.

19. THIS PLAN SHALL BE IN EFFECT UNTIL ALL DISTURBED AREAS ARE PERMANENTLY STABILIZED, TRANSFERRED TO NEW OWNERSHIP, OR DEVELOPED UNDER FUTURE PLANS WITH AN NEW NOI, WPCP, AND WDID NUMBER.

PERMANENT POST-CONSTRUCTION BMP NOTES

1. OPERATION AND MAINTENANCE SHALL BE SECURED BY AN EXECUTED AND RECORDED STORM WATER MANAGEMENT AND DISCHARGE CONTROL MAINTENANCE AGREEMENT (SWMDCMA), OR ANOTHER MECHANISM APPROVED BY THE CITY ENGINEER, THAT ASSURES ALL PERMANENT BMP'S WILL BE MAINTAINED IN PERPETUITY, PER THE LAND DEVELOPMENT MANUAL, STORM WATER STANDARDS.

2. PERMANENT POST CONSTRUCTION BMP DEVICES SHOWN ON PLAN SHALL NOT BE MOVED OR MODIFIED WITHOUT THE APPROVAL OF THE CITY ENGINEER OR RESIDENT ENGINEER AND THE ENGINEER OF WORK.

EROSION AND SEDIMENT CONTROL NOTES

TEMPORARY EROSION/SEDIMENT CONTROL, PRIOR TO COMPLETION OF FINAL IMPROVEMENTS, SHALL BE PERFORMED BY THE CONTRACTOR OR QUALIFIED PERSON AS INDICATED BELOW:

1. ALL REQUIREMENTS OF THE CITY OF SAN DIEGO "LAND DEVELOPMENT MANUAL, STORM WATER STANDARDS" MUST BE INCORPORATED INTO THE DESIGN AND CONSTRUCTION OF THE PROPOSED GRADING/IMPROVEMENTS CONSISTENT WITH THE APPROVED STORM WATER POLLUTION PREVENTION PLAN (SWPPP) AND/OR WATER POLLUTION CONTROL PLAN (WPCP) FOR CONSTRUCTION LEVEL BMP'S AND FOR PERMANENT POST CONSTRUCTION TREATMENT CONTROL PERMANENT BMP'S, THE WATER QUALITY TECHNICAL REPORT (WQTR) IF APPLICABLE.

2. FOR STORM DRAIN INLETS, PROVIDE A GRAVEL BAG SILT BASIN IMMEDIATELY UPSTREAM OF INLET AS INDICATED ON DETAILS.

3. FOR INLETS LOCATED AT SUMPS ADJACENT TO TOP OF SLOPES, THE CONTRACTOR SHALL ENSURE THAT WATER DRAINING TO THE SUMP IS DIRECTED INTO THE INLET AND THAT A MINIMUM OF 1.00' FREEBOARD EXISTS AND IS MAINTAINED ABOVE THE TOP OF THE INLET. IF FREEBOARD IS NOT PROVIDED BY GRADING SHOWN ON THESE PLANS, THE CONTRACTOR SHALL PROVIDE IT VIA TEMPORARY MEASURES, I.E. GRAVEL BAGS OR DIKES.

4. THE CONTRACTOR OR QUALIFIED PERSON SHALL BE RESPONSIBLE FOR CLEANUP OF SILT AND MUD ON ADJACENT STREET(S) AND STORM DRAIN SYSTEM DUE TO CONSTRUCTION ACTIVITY.

5. THE CONTRACTOR OR QUALIFIED PERSON SHALL CHECK AND MAINTAIN ALL LINED AND UNLINED DITCHES AFTER EACH RAINFALL.

6. THE CONTRACTOR SHALL REMOVE SILT AND DEBRIS AFTER EACH MAJOR RAINFALL.

7. EQUIPMENT AND WORKERS FOR EMERGENCY WORK SHALL BE MADE AVAILABLE AT ALL TIMES DURING THE RAINY SEASON. ALL NECESSARY MATERIALS SHALL BE STOCKPILED ON SITE AT CONVENIENT LOCATIONS TO FACILITATE RAPID CONSTRUCTION OF TEMPORARY DEVICES WHEN RAIN IS IMMINENT.

8. THE CONTRACTOR SHALL RESTORE ALL EROSION/SEDIMENT CONTROL DEVICES TO WORKING ORDER TO THE SATISFACTION OF THE CITY ENGINEER OR RESIDENT ENGINEER AFTER EACH RUN-OFF PRODUCING RAINFALL.

9. THE CONTRACTOR SHALL INSTALL ADDITIONAL EROSION/SEDIMENT CONTROL MEASURES AS MAY BE REQUIRED BY THE RESIDENT ENGINEER DUE TO UNCOMPLETED GRADING OPERATIONS OR UNFORESEEN CIRCUMSTANCES, WHICH MAY ARISE.

10. THE CONTRACTOR SHALL BE RESPONSIBLE AND SHALL TAKE NECESSARY PRECAUTIONS TO PREVENT PUBLIC TRESPASS ONTO AREAS WHERE IMPOUNDED WATERS CREATE A HAZARDOUS CONDITION.

11. ALL EROSION/SEDIMENT CONTROL MEASURES PROVIDED PER THE APPROVED GRADING PLAN SHALL BE INCORPORATED HEREON. ALL EROSION/SEDIMENT CONTROL FOR INTERIM CONDITIONS SHALL BE DONE TO THE SATISFACTION OF THE RESIDENT ENGINEER.

12. GRADED AREAS AROUND THE PROJECT PERIMETER MUST DRAIN AWAY FROM THE FACE OF THE SLOPE AT THE CONCLUSION OF EACH WORKING DAY.

13. ALL REMOVABLE PROTECTIVE DEVICES SHOWN SHALL BE IN PLACE AT THE END OF EACH WORKING DAY WHEN RAIN IS IMMINENT.

14. THE CONTRACTOR SHALL ONLY GRADE, INCLUDING CLEARING AND GRUBBING FOR THE AREAS FOR WHICH THE CONTRACTOR OR QUALIFIED PERSON CAN PROVIDE EROSION/SEDIMENT CONTROL MEASURES.

15. THE CONTRACTOR SHALL ARRANGE FOR WEEKLY MEETINGS DURING OCTOBER 1ST TO APRIL 30TH FOR PROJECT TEAM (GENERAL CONTRACTOR, QUALIFIED PERSON, EROSION CONTROL SUBCONTRACTOR IF ANY, ENGINEER OF WORK, OWNER/DEVELOPER AND THE RESIDENT ENGINEER) TO EVALUATE THE ADEQUACY OF THE EROSION/SEDIMENT CONTROL MEASURES AND OTHER RELATED CONSTRUCTION ACTIVITIES.

MINIMUM POST-CONSTRUCTION MAINTENANCE PLAN

AT THE COMPLETION OF THE WORK SHOWN, THE FOLLOWING PLAN SHALL BE FOLLOWED TO ENSURE WATER QUALITY CONTROL IS MAINTAINED FOR THE LIFE OF THE PROJECT:

1. STABILIZATION: ALL PLANTED SLOPES AND OTHER VEGETATED AREAS SHALL BE INSPECTED PRIOR TO OCTOBER 1 OF EACH YEAR AND AFTER MAJOR RAINFALL EVENTS (MORE THAN ½ INCH) AND REPAIRED AND REPLANTED AS NEEDED UNTIL A NOTICE OF TERMINATION (NOT) IS FILED.

2. STRUCTURAL PRACTICES: DESILTING BASINS, DIVERSION DITCHES, DOWNDRAINS, INLETS, OUTLET PROTECTION MEASURES, AND OTHER PERMANENT WATER QUALITY AND SEDIMENT AND EROSION CONTROLS SHALL BE INSPECTED PRIOR TO OCTOBER 1ST OF EACH YEAR AND AFTER MAJOR RAINFALL EVENTS (MORE THAN ½ INCH). REPAIRS AND REPLACEMENTS SHALL BE MADE AS NEEDED AND RECORDED IN THE MAINTENANCE LOG IN PERPETUITY.

3. OPERATION AND MAINTENANCE, FUNDING: POST-CONSTRUCTION MANAGEMENT MEASURES ARE THE RESPONSIBILITY OF THE DEVELOPER UNTIL THE TRANSFER OF RESPECTIVE SITES TO HOME BUILDERS, INDIVIDUAL OWNERS, HOMEOWNERS ASSOCIATIONS, SCHOOL DISTRICTS, OR LOCAL AGENCIES AND/OR GOVERNMENTS. AT THAT TIME, THE NEW OWNERS SHALL ASSUME RESPONSIBILITY FOR THEIR RESPECTIVE PORTIONS OF THE DEVELOPMENT.

STORMWATER PROTECTION NOTES

1. DURING THE RAINY SEASON THE AMOUNT OF EXPOSED SOIL ALLOWED AT ONE TIME SHALL NOT EXCEED THAT WHICH CAN BE ADEQUATELY PROTECTED BY THE PROPERTY OWNER IN THE THE EVENT OF A RAINSTORM. 125% OF ALL SUPPLIES NEEDED FOR BMP (BEST MANAGEMENT PRACTICES) MEASURES SHALL BE RETAINED ON THE JOB SITE IN A MANNER THAT ALLOWS FULL DEPLOYMENT AND COMPLETE INSTALLATION IN 48 HOURS OR LESS OF A FORECAST RAIN.

2. THE PROPERTY OWNER IS OBLIGATED TO INSURE COMPLIANCE WITH ALL APPLICABLE STORMWATER REGULATIONS AT ALL TIMES. THE BMP'S THAT HAVE BEEN INCORPORATED INTO THIS PLAN SHALL BE IMPLEMENTED AND MAINTAINED TO EFFECTIVELY PREVENT THE POTENTIALLY NEGATIVE IMPACTS OF THIS PROJECT'S CONSTRUCTION ACTIVITIES ON STORWATER QUALITY. THE MAINTENANCE OF THE BMP'S IS THE PERMITTEE'S RESPONSIBILITY, AND FAILURE TO PROPERLY INSTALL OR MAINTAIN THE BMP'S MAY RESULT IN ENFORCEMENT ACTION BY THE CITY OF SAN DIEGO OR OTHERS. IF INSTALLED BMP'S FAIL, THEY MUST BE REPAIRED OR REPLACED WITH AN ACCEPTABLE ALTERNATIVE WITHIN 24 HOURS, OR AS SOON AS SAFE TO DO SO.

BONDED FIBER MATRIX (BFM)

THE USE OF BFM IS SUBJECT TO THE FOLLOWING LIMITATIONS AND RESTRICTIONS:

1. APPLICATION RATES SHALL BE 3500 POUNDS PER ACRE MINIMUM FOR 2:1 OR SHALLOWER SLOPES AND 4000 POUNDS PER ACRE FOR SLOPES STEEPER THAN 2:1

2. BFM SHALL BE APPLIED AT LEAST 24 HOURS BEFORE OR AFTER RAINFALL.

3. THE SITE MUST BE PROTECTED WITH BROW DITCHES AND / OR DIVERSION BERMS AT THE TOP OF SLOPES TO DIVERT FLOW FROM THE FACE OF THE SLOPE.

4. BFM SHALL BE APPLIED TO PROVIDE 100% COVERAGE (IE APPLICATION FROM MULTIPLE ANGLES).

5. FOR PERMANENT EROSION CONTROL PURPOSES, BFM MUST BE INSTALLED IN CONJUNCTION WITH SEEDED EROSION CONTROL VEGETATION.

6. A LETTER FROM THE HYDROSEED CONTRACTOR CERTIFYING THAT THE BFM HAS BEEN INSTALLED IN ACCORDANCE WITH THE APPROVED APPLICATION RATES AND COVERAGE REQUIREMENTS SHALL BE SUBMITTED TO THE COUNTY INSPECTOR FOR APPROVAL.

FIBER MATRIX (FM)

THE USE OF SFM IS SUBJECT TO THE FOLLOWING LIMITATIONS AND RESTRICTIONS:

1. SFM MAY BE USED FOR TEMPORARY EROSION CONTROL FOR DISTURBED AREAS, INCLUDING PAD AND SEPTIC FIELD AREAS.

2. THE SFM SHALL BE APPLIED AT LEAST 24 HOURS BEFORE OR AFTER RAINFALL AND SHALL BE APPLIED TO PROVIDE 100% COVERAGE (I.E. APPLIED FROM MULTIPLE DIRECTIONS AND ANGLES).

3. THE APPLICATION AREA MUST BE PROTECTED BY BROW DITCHES AND OR DIVERSION BERMS AT TOP OF SLOPES TO DIVERT FLOW FROM THE FACE OF THE PROTECTED SLOPE.

4. FOR PERMANENT EROSION CONTROL PURPOSES, SFM MUST BE INSTALLED IN CONJUNCTION WITH SEEDED EROSION CONTROL VEGETATION OR HAND PLANTINGS. AS WITH ALL OTHER APPLICATIONS, SFM WILL NOT BE CONSIDERED PERMANENT UNTIL 70% VEGETATION ESTABLISHMENT.

5. COVERAGE AND CONCENTRATION: FOR EACH ACRE COVERED, THE MINIMUM APPLICATION VOLUME SHALL BE 10 GALLONS NON-TOXIC WATER-PERMEABLE SOIL-STABILIZING LIQUID EMULSION WITH 3,000 LBS. OF HYDRAULIC MULCH. THE EMULSION MUST BE DESIGNED TO PROTECT SOIL, PREVENT EROSION, AND FLOCCULATE (CLUMP) SEDIMENT.

6. A LETTER FROM THE HYDROSEED CONTRACTOR CERTIFYING THE SFM WAS INSTALLED IN ACCORDANCE WITH APPROVED APPLICATION RATES, COVERAGE, AND MANUFACTURER'S DILUTION RATION SHALL BE SUBMITTED TO THE COUNTY INSPECTOR FOR APPROVAL.

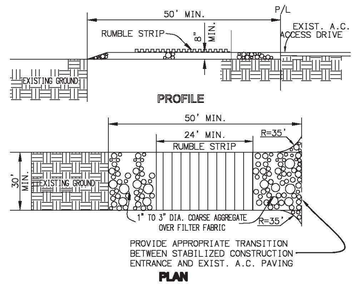

TEMPORARY GRAVEL CONSTRUCTION ENTRANCE/EXIT

SCALE: NTS

A C-10

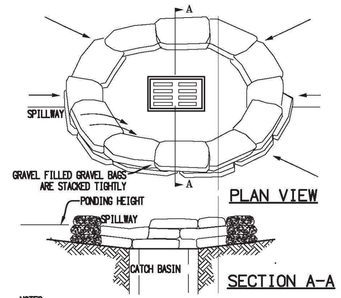

NOTES:
1. GRAVEL BAGS, OF EITHER BURLAP OR WOVEN GEOTEXTILE FABRIC, ARE FILLED WITH GRAVEL, LAYERED AND PACKED TIGHTLY.
2. LEAVE ONE GRAVEL BAGS GAP IN THE TOP ROW TO PROVIDE A SPILLWAY FOR OVERFLOW.
3. INSPECT BARRIERS AND REMOVE SEDIMENT AFTER EACH STORM EVENT. SEDIMENT AND GRAVEL MUST BE REMOVED FROM THE TRAVELED WAY IMMEDIATELY.

CATCH BASIN / INLET PROTECTION

SCALE: NTS

B C-10

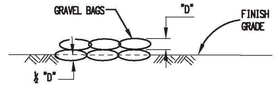

GRAVEL BAG DETAIL

SCALE: NTS

C C-10

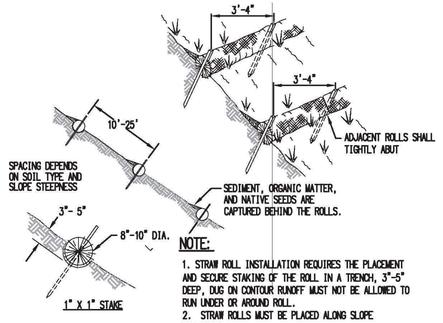

NOTE:
1. STRAW ROLL INSTALLATION REQUIRES THE PLACEMENT AND SECURE STAKING OF THE ROLL IN A TRENCH, 3"-5" DEEP, DUG ON CONTOUR RUNOFF MUST NOT BE ALLOWED TO RUN UNDER OR AROUND ROLL.
2. STRAW ROLLS MUST BE PLACED ALONG SLOPE CONTOURS

FIBER ROLL

SCALE: NTS

D C-10

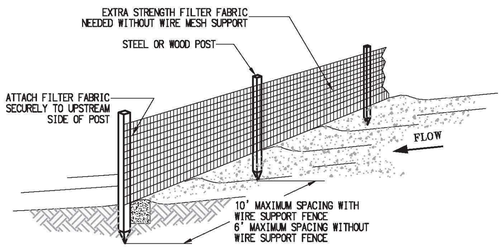

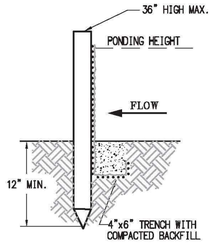

TRENCH DETAIL

NOTES:
1. SILT FENCE SHALL BE PLACED ON SLOPE CONTOURS TO MAXIMIZE PONDING EFFICIENCY.

2. INSPECT AND REPAIR FENCE AFTER EACH STORM EVENT AND REMOVE SEDIMENT WHEN NECESSARY. 9" MAXIMUM RECOMMENDED STORAGE HEIGHT.

3. REMOVED SEDIMENT SHALL BE DEPOSITED TO AN AREA THAT WILL NOT CONTRIBUTE SEDIMENT OFF-SITE AND CAN BE PERMANENTLY STABILIZED.

SILT FENCE

SCALE: NTS

E C-10

HYDROSEED MIX

HYDROSEED MIX	
LASTHENIA CHRYSOSTOMA	1.5 LBS/ACRE
PLANTAGO INSULARIS	100 LBS/ACRE
ADDITIONAL MATERIALS:	
MULCH - CORNWED FIBER	2,000 LBS/ACRE
BINDER - TERRA TAC #3	200 LBS/ACRE
FERTILIZER: 16-20-0	175 LBS/ACRE

C-10

RBF CONSULTING
A Baker Company
9755 CLAIREMONT MESA BLVD.
SAN DIEGO, CA 92124
858-614-5000

SPEC. NO. 8147

REGISTERED PROFESSIONAL ENGINEER — ROBERT R. GEMAR — No. 45717 Exp. 12/31/14 — CIVIL — STATE OF CALIFORNIA

PLANS FOR THE CONSTRUCTION OF
South Mission Beach Lifeguard Station

Erosion Control Notes and Details | C-10

CITY OF SAN DIEGO, CALIFORNIA
ENGINEERING & CAPITAL PROJECTS
ARCHITECTURAL ENGINEERING & CONTRACTS DIVISION
SHEET 16 OF 94 SHEETS

WBS S-00791

APPROVED: FOR CITY ENGINEER — DATE 10/13/2014

SUBMITTED BY: JIHAD SLEIMAN, PROJECT MANAGER

DESCRIPTION	BY	APPROVED	DATE	FILMED
ORIGINAL	WH/TT			

YOUSIF BENYAMIN, PROJECT ENGINEER
218-1693
CCS27 COORDINATES
1858-6253
CCS83 COORDINATES

CONTRACTOR _____ DATE STARTED _____
INSPECTOR _____ DATE COMPLETED _____

32849-16-D

COPYRIGHT October 12, 2014 at 7:34PM Plot by ABLACKWOOD File Location: H:\PDATA\2510\2729\CADD\Land\Div\Grading\Precise\2729-GR-11.dwg Proprietary design: These drawings and design are protected by common law copyright. All patentable material contained herein and originating with Dominy + Associates Architects @ domusstudio LLP shall be the property of Dominy + Associates Architects @ domusstudio LLP

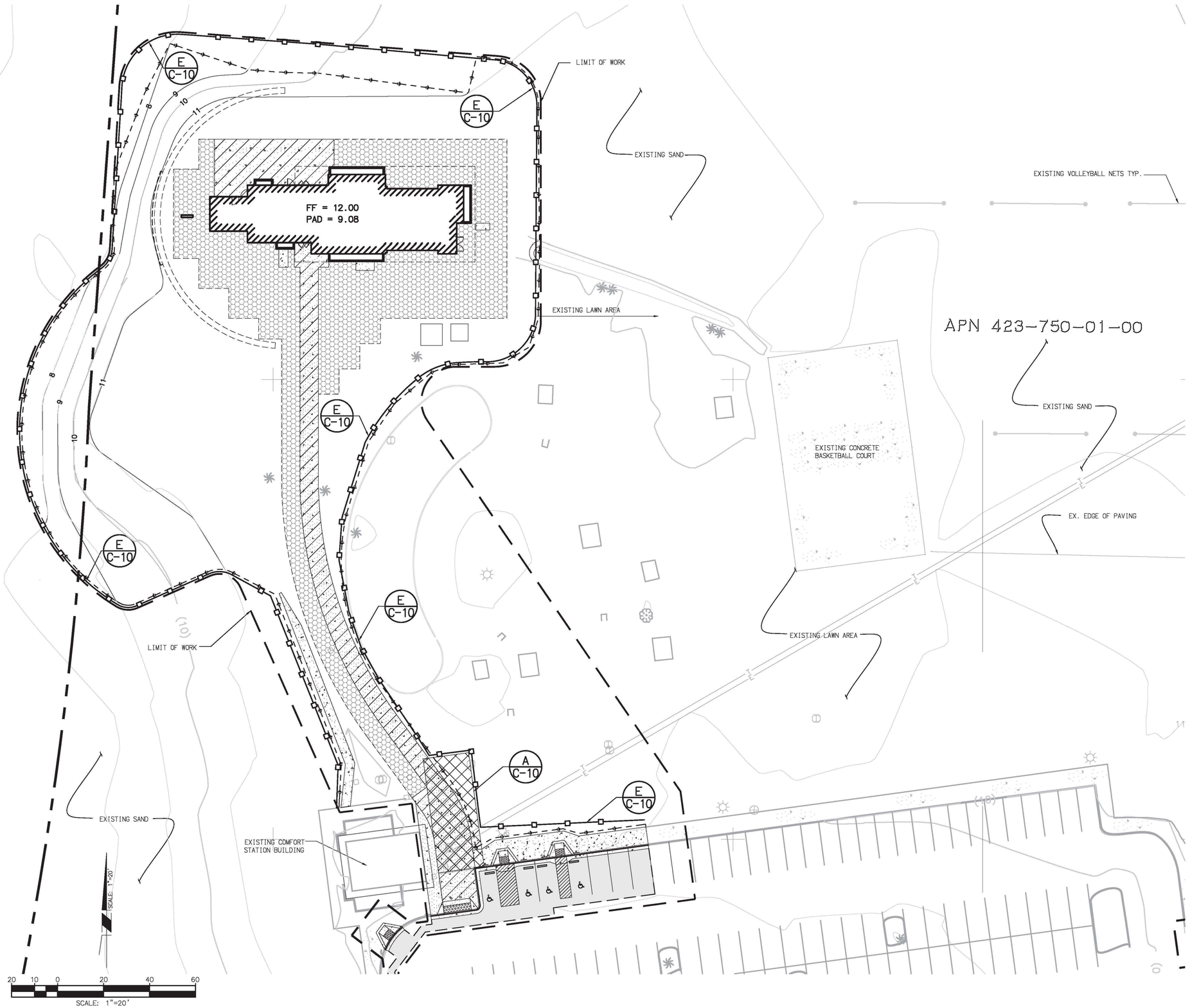

LEGEND

ITEM	SYMBOL
SILT FENCE	
FIBER ROLL	F
GRAVEL BAGS	
CATCH BASIN/INLET PROTECTION	
STABILIZED CONSTRUCTION ENTRANCE/EXIT	

C-11

RBF CONSULTING
A Baker Company
9755 CLAIREMONT MESA BLVD.
SAN DIEGO, CA. 92124
858-614-5000

SPEC. NO. 8147

REGISTERED PROFESSIONAL ENGINEER — ROBERT R. REINER — No. 45717 — Exp. 12/31/14 — CIVIL — STATE OF CALIFORNIA

PLANS FOR THE CONSTRUCTION OF

South Mission Beach Lifeguard Station

Erosion Control Plan — C-11

CITY OF SAN DIEGO, CALIFORNIA
ENGINEERING & CAPITAL PROJECTS
ARCHITECTURAL ENGINEERING & CONTRACTS DIVISION
SHEET 17 OF 94 SHEETS

APPROVED: _____ FOR CITY ENGINEER
10/13/2014 DATE

WBS S-00791

SUBMITTED BY:
JIHAD SLEIMAN
PROJECT MANAGER

DESCRIPTION	BY	APPROVED	DATE	FILMED
ORIGINAL	WH/TT			

YOUSIF BENYAMIN
PROJECT ENGINEER

218-1693
CCS27 COORDINATES

1858-6253
CCS83 COORDINATES

CONTRACTOR _____ DATE STARTED _____
INSPECTOR _____ DATE COMPLETED _____

32849-17-D

© COPYRIGHT October 12, 2014 at 7:38PM Plot by ABLACKWOOD. File Location: H:\PDATA\25\102729\CADD\Landdev\Grading\Precise\2729-GR-12.dwg
Proprietary design: These drawings and design are protected by common law copyright. All patentable material contained herein and originating with Dominy + Associates Architects @ domusstudio LLP shall be the property of Dominy + Associates Architects @ domusstudio LLP

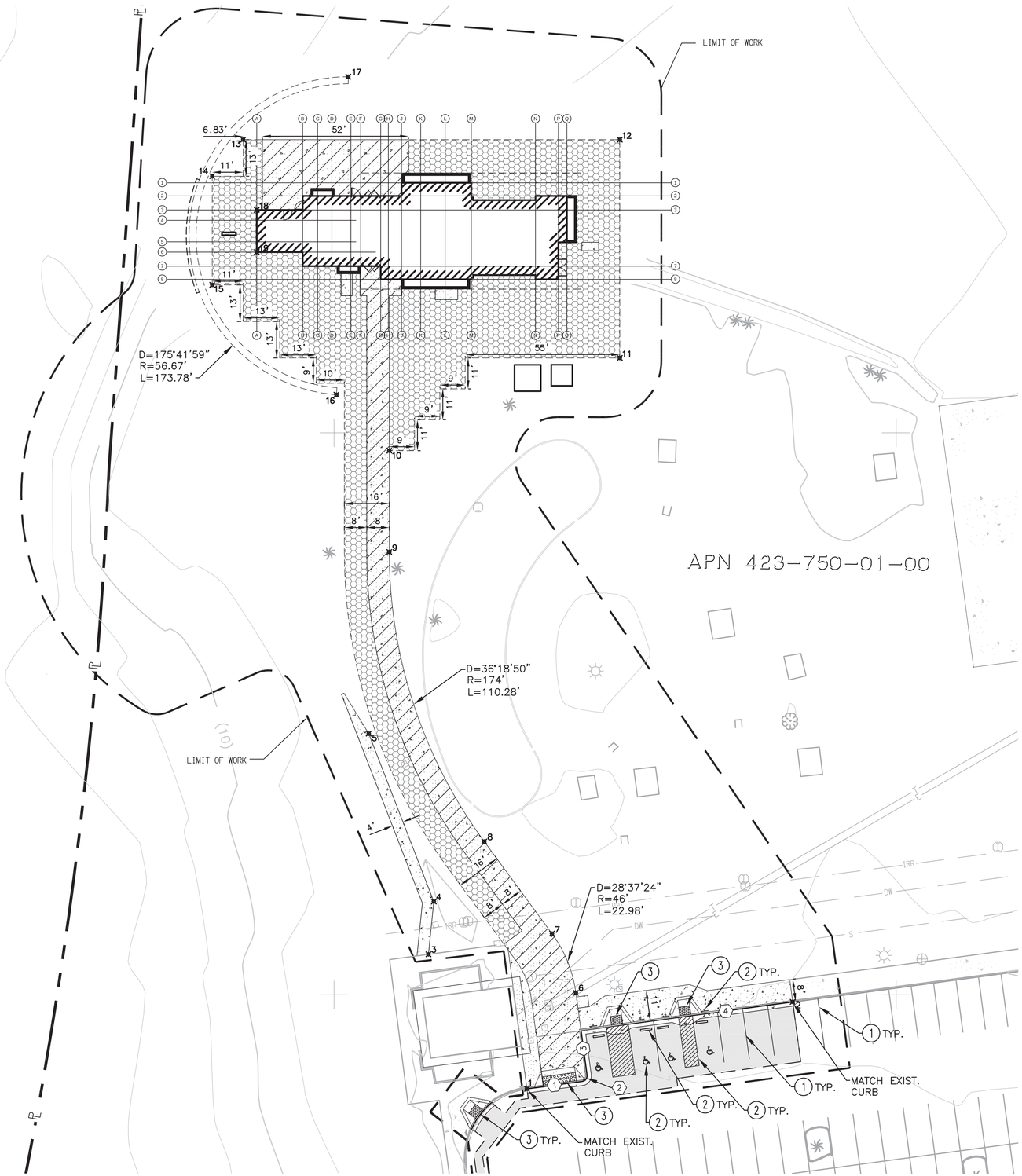

CONSTRUCTION NOTES

1. PAINT 4" WHITE STRIPES AS SHOWN
2. INSTALL ACCESSIBLE PARKING AS SHOWN THAT INCLUDES STRIPING, ISA SYMBOL, WHEEL STOPS AND SIGNAGE PER SDM-117
3. INSTALL TRUNCATED DOMES WARNING TILE PER SDG-130

CURB DATA TABLE				
NO.	BEARING/DELTA	RADIUS	LENGTH	NOTE
1	N 82°18'34" E	--	19.84'	6" CURB AND GUTTER
2	90°00'00"	2.00'	3.14'	6" CURB AND GUTTER
3	N 07°41'26" W	--	16.00'	6" CURB AND GUTTER
4	N 82°18'34" E	--	76.00'	6" CURB AND GUTTER

COORDINATE TABLE		
NO.	NORTHING	EASTING
1	1857736.1192	6253374.7970
2	1857767.0504	6253469.3462
3	1857783.9627	6253339.7754
4	1857802.7557	6253341.6813
5	1857862.5060	6253318.5246
6	1857770.2554	6253392.2235
7	1857791.3412	6253383.7034
8	1857824.0968	6253359.6296
9	1857927.1413	6253325.8360
10	1857963.2046	6253325.8360
11	1857996.2061	6253407.8360
12	1858073.8727	6253407.8360
13	1858073.8727	6253273.8360
14	1858060.8727	6253262.8360
15	1858022.2061	6253262.8360
16	1857983.1122	6253307.0040
17	1858096.2927	6253311.2527
18	1858048.8728	6253278.6693
19	1858033.8728	6253278.6693

SURVEYOR NOTE

CONTRACTOR SHALL EMPLOY A LICENSED SURVEYOR TO STAKE OUT THE PROPOSED IMPROVEMENTS.

SCALE: 1"=20'

20 10 0 20 40 60

SCALE: 1"=20'

South Mission Beach Lifeguard Station
700 N. Jetty Road

C-12

RBF CONSULTING
A Baker Company
9755 CLAIREMONT MESA BLVD.
SAN DIEGO, CA. 92124
858-614-5000

SPEC. NO. 8147

REGISTERED PROFESSIONAL ENGINEER — ROBERT R. GEHMAN — No. 45717 Exp. 12/31/14 — CIVIL — STATE OF CALIFORNIA

PLANS FOR THE CONSTRUCTION OF

South Mission Beach Lifeguard Station

Horizontal Control Plan | C-12

CITY OF SAN DIEGO, CALIFORNIA
ENGINEERING & CAPITAL PROJECTS
ARCHITECTURAL ENGINEERING & CONTRACTS DIVISION
SHEET 18 OF 94 SHEETS

WBS S-00791

APPROVED: _____ FOR CITY ENGINEER — DATE 10/13/2014

SUBMITTED BY: JIHAD SLEIMAN, PROJECT MANAGER

DESCRIPTION	BY	APPROVED	DATE	FILMED
ORIGINAL	WH/TT			

YOUSIF BENYAMIN, PROJECT ENGINEER

218-1693

CCS27 COORDINATES

1858-6253

CCS83 COORDINATES

CONTRACTOR _____ DATE STARTED _____
INSPECTOR _____ DATE COMPLETED _____

32849-18-D

COASTAL DEVELOPMENT PERMIT NO. 6-11-044
SPECIAL CONDITIONS NOTES:

1. NO ADVERTISING SHALL BE PERMITTED ON THE APPROVED STRUCTURES.

2. CLOCKS, TEMPERATURE DISPLAYS, OR OTHER SAFETY INFORMATION MAY BE LOCATED ON THE FACADE OF THE APPROVED STRUCTURES.

3. ANY FILL MATERIAL USED DURING CONSTRUCTION SHALL BE CLEAN, BEACH COMPATIBLE MATERIAL WITH NO RUBBLE, ORGANICS, OR OTHER DEBRIS.

4. DURING CONSTRUCTION OF THE APPROVED DEVELOPMENT, DISTURBANCES TO SAND AND INTERTIDAL AREAS SHALL BE MINIMIZED TO THE MAXIMUM EXTENT FEASIBLE. ALL EXCAVATED BEACH SAND SHALL BE REDEPOSITED ON THE BEACH. LOCAL SAND, COBBLES OR SHORELINE ROCKS SHALL NOT BE USED FOR BACKFILL OR FOR ANY OTHER PURPOSE AS CONSTRUCTION MATERIAL..

5. THE LANDSCAPING PROPOSED ALONG THE PERIMETER OF THE NEW LIFEGUARD STATION SHALL BE DELETED.

6. NO OVERNIGHT STORAGE OF EQUIPMENT OR MATERIALS SHALL OCCUR ON SANDY BEACH OR PUBLIC PARKING SPACES.

7. ACCESS CORRIDORS SHALL BE LOCATED IN A MANNER THAT HAS THE LEAST IMPACT ON PUBLIC ACCESS TO AND ALONG THE SHORELINE VIA MISSION BLVD, OCEAN FRONT WALK AND THE PUBLIC PARKING LOT SOUTH OF THE PROJECT SITE.

8. NO WORK SHALL OCCUR ON THE BEACH BETWEEN MEMORIAL DAY WEEKEND AND LABOR DAY OF ANY YEAR.

9. THE STAGING SITE SHALL BE REMOVED AND/OR RESTORED IMMEDIATELY FOLLOWING COMPLETION OF THE DEVELOPMENT.

NOTE: THE CONTRACTOR WILL NOT HAVE USE OF THE PARKING LOT FOR CONSTRUCTION VEHICLE PARKING DURING CONSTRUCTION.

NOTE: THE EXISTING TOTAL PARKING COUNT, (276) SPACES WILL BE REDUCED TO 274 SPACES - (266) STANDARD AND (8) ACCESSIBLE SPACES. THE (4) ACCESSIBLE SPACES LOCATED AT THE SOUTHWEST CORNER OF THE PARKING LOT TO REMAIN.

NOTE: THE CONSTRUCTION OF THE FACILITIES WILL BE TAKING PLACE ON THE BEACH LOCATED SEAWARD OF THE MISSION BEACH BOARDWALK. AS SUCH, THE CONSTRUCTION ACTIVITIES REQUIRED FOR CONSTRUCTION WILL BE TAKING PLACE ON TOP OF FAIRLY CLEAN SANDS WHICH IN THE DRY HAVE POOR NEAR-SURFACE BEARING CAPACITY AND TRENCH EXCAVATION STABILITY DUE TO THE LACK OF FINE CONTENT WITHIN THE SOIL. THUS, CONSTRUCTION ACTIVITIES WILL NEED TO CONSIDER THE POTENTIAL DIFFICULTY OF USING CONSTRUCTION EQUIPMENT WITH STANDARD WHEELS AND THE POTENTIAL FOR CONTINUED DISTURBANCE OF NEAR-SURFACE SOILS. THE CONTRACTOR WILL NEED TO CONSIDER THE POTENTIAL BENEFITS OF USING LOW BEARING PRESSURE EQUIPMENT, PLANKING AND OTHER SURFACE PAVEMENT MATS, THE USE OF WATER, AND/OR OTHER APPROVED SOIL STABILIZATION METHODS TO FACILITATE HIS OPERATIONS.

EXISTENCE OF ROCK

IT SHOULD BE NOTED THAT ANY OF THE INSTALLATION TECHNIQUES DESCRIBED ABOVE WILL MEET REFUSAL ON ANY RIPRAP OR DEBRIS LEFT IN-PLACE. THE CONTRACTOR SHOULD BE AWARE OF THE POSSIBLE PRESENCE OF EXISTING RIPRAP AND DEBRIS EXTENDING TO AN UNDETERMINED DEPTH ALONG THE SHEET-PILE ALIGNMENT, WHICH WILL REQUIRE REMOVAL PRIOR TO SHEET-PILE INSTALLATION.

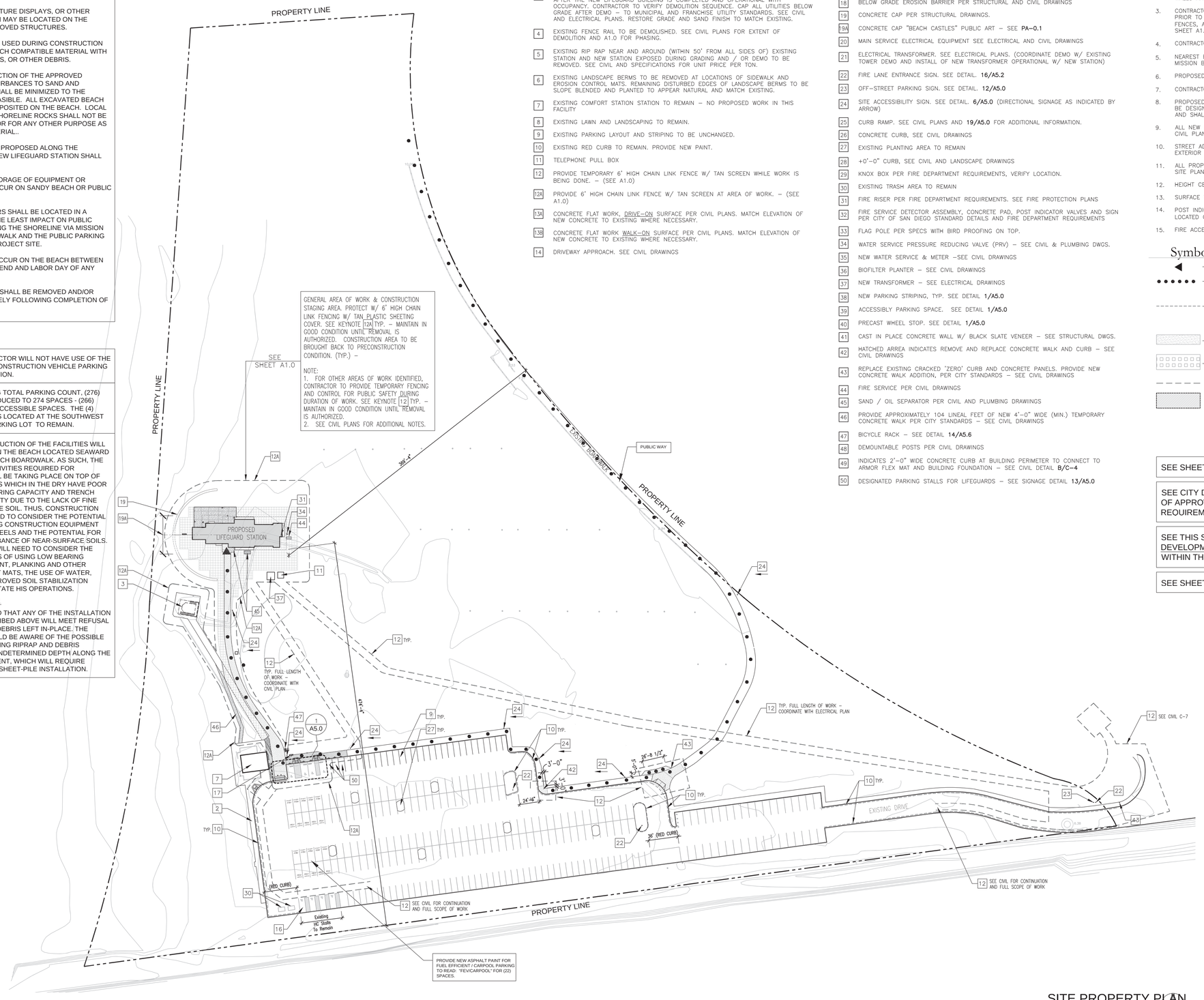

SITE PROPERTY PLAN

0' 10' 30' 60' 120'

SCALE: 1" = 60'

Site Plan Keyed Notes (A0.1 and A0.2)

1. EXISTING CONCRETE WALK TO BE DEMOLISHED. SEE CIVIL PLANS FOR EXTENT OF DEMOLITION AND A1.0 FOR PHASING.
2. EXISTING CONCRETE WALK TO REMAIN.
3. REMAINING EXISTING LIFEGUARD BUILDING AND ELECTRICAL SERVICE TO BE REMOVED AFTER THE NEW LIFEGUARD BUILDING IS COMPLETED AND OPERATIONAL WITH OCCUPANCY. CONTRACTOR TO VERIFY DEMOLITION SEQUENCE. CAP ALL UTILITIES BELOW GRADE AFTER DEMO – TO MUNICIPAL AND FRANCHISE UTILITY STANDARDS. SEE CIVIL AND ELECTRICAL PLANS. RESTORE GRADE AND SAND FINISH TO MATCH EXISTING.
4. EXISTING FENCE RAIL TO BE DEMOLISHED. SEE CIVIL PLANS FOR EXTENT OF DEMOLITION AND A1.0 FOR PHASING.
5. EXISTING RIP RAP NEAR AND AROUND (WITHIN 50' FROM ALL SIDES OF) EXISTING STATION AND NEW STATION EXPOSED DURING GRADING AND / OR DEMO TO BE REMOVED. SEE CIVIL AND SPECIFICATIONS FOR UNIT PRICE PER TON.
6. EXISTING LANDSCAPE BERMS TO BE REMOVED AT LOCATIONS OF SIDEWALK AND EROSION CONTROL MATS. REMAINING DISTURBED EDGES OF LANDSCAPE BERMS TO BE SLOPE BLENDED AND PLANTED TO APPEAR NATURAL AND MATCH EXISTING.
7. EXISTING COMFORT STATION STATION TO REMAIN – NO PROPOSED WORK IN THIS FACILITY
8. EXISTING LAWN AND LANDSCAPING TO REMAIN.
9. EXISTING PARKING LAYOUT AND STRIPING TO BE UNCHANGED.
10. EXISTING RED CURB TO REMAIN. PROVIDE NEW PAINT.
11. TELEPHONE PULL BOX
12. PROVIDE TEMPORARY 6' HIGH CHAIN LINK FENCE W/ TAN SCREEN WHILE WORK IS BEING DONE. – (SEE A1.0)

12A. PROVIDE 6' HIGH CHAIN LINK FENCE W/ TAN SCREEN AT AREA OF WORK. – (SEE A1.0)

13A. CONCRETE FLAT WORK, DRIVE–ON SURFACE PER CIVIL PLANS. MATCH ELEVATION OF NEW CONCRETE TO EXISTING WHERE NECESSARY.

13B. CONCRETE FLAT WORK WALK–ON SURFACE PER CIVIL PLANS. MATCH ELEVATION OF NEW CONCRETE TO EXISTING WHERE NECESSARY.

14. DRIVEWAY APPROACH. SEE CIVIL DRAWINGS
15. EROSION CONTROL MAT PER CIVIL DRAWINGS.
16. EXISTING LOCATION OF (4) ACCESSIBLE SPACES TO REMAIN.
17. NEW FIRE HYDRANT PER CIVIL DRAWINGS.
18. BELOW GRADE EROSION BARRIER PER STRUCTURAL AND CIVIL DRAWINGS
19. CONCRETE CAP PER STRUCTURAL DRAWINGS.

19A. CONCRETE CAP "BEACH CASTLES" PUBLIC ART – SEE PA–0.1

20. MAIN SERVICE ELECTRICAL EQUIPMENT SEE ELECTRICAL AND CIVIL DRAWINGS
21. ELECTRICAL TRANSFORMER. SEE ELECTRICAL PLANS. (COORDINATE DEMO W/ EXISTING TOWER DEMO AND INSTALL OF NEW TRANSFORMER OPERATIONAL W/ NEW STATION)
22. FIRE LANE ENTRANCE SIGN. SEE DETAIL. 16/A5.2
23. OFF–STREET PARKING SIGN. SEE DETAIL. 12/A5.0
24. SITE ACCESSIBILITY SIGN. SEE DETAIL. 6/A5.0 (DIRECTIONAL SIGNAGE AS INDICATED BY ARROW)
25. CURB RAMP. SEE CIVIL PLANS AND 19/A5.0 FOR ADDITIONAL INFORMATION.
26. CONCRETE CURB, SEE CIVIL DRAWINGS
27. EXISTING PLANTING AREA TO REMAIN
28. +0'–0" CURB, SEE CIVIL AND LANDSCAPE DRAWINGS
29. KNOX BOX PER FIRE DEPARTMENT REQUIREMENTS, VERIFY LOCATION.
30. EXISTING TRASH AREA TO REMAIN
31. FIRE RISER PER FIRE DEPARTMENT REQUIREMENTS. SEE FIRE PROTECTION PLANS
32. FIRE SERVICE DETECTOR ASSEMBLY, CONCRETE PAD, POST INDICATOR VALVES AND SIGN PER CITY OF SAN DIEGO STANDARD DETAILS AND FIRE DEPARTMENT REQUIREMENTS
33. FLAG POLE PER SPECS WITH BIRD PROOFING ON TOP.
34. WATER SERVICE PRESSURE REDUCING VALVE (PRV) – SEE CIVIL & PLUMBING DWGS.
35. NEW WATER SERVICE & METER –SEE CIVIL DRAWINGS
36. BIOFILTER PLANTER – SEE CIVIL DRAWINGS
37. NEW TRANSFORMER – SEE ELECTRICAL DRAWINGS
38. NEW PARKING STRIPING, TYP. SEE DETAIL 1/A5.0
39. ACCESSIBLY PARKING SPACE. SEE DETAIL 1/A5.0
40. PRECAST WHEEL STOP. SEE DETAIL 1/A5.0
41. CAST IN PLACE CONCRETE WALL W/ BLACK SLATE VENEER – SEE STRUCTURAL DWGS.
42. HATCHED ARREA INDICATES REMOVE AND REPLACE CONCRETE WALK AND CURB – SEE CIVIL DRAWINGS
43. REPLACE EXISTING CRACKED 'ZERO' CURB AND CONCRETE PANELS. PROVIDE NEW CONCRETE WALK ADDITION, PER CITY STANDARDS – SEE CIVIL DRAWINGS
44. FIRE SERVICE PER CIVIL DRAWINGS
45. SAND / OIL SEPARATOR PER CIVIL AND PLUMBING DRAWIINGS
46. PROVIDE APPROXIMATELY 104 LINEAL FEET OF NEW 4'–0" WIDE (MIN.) TEMPORARY CONCRETE WALK PER CITY STANDARDS – SEE CIVIL DRAWINGS
47. BICYCLE RACK – SEE DETAIL 14/A5.6
48. DEMOUNTABLE POSTS PER CIVIL DRAWINGS
49. INDICATES 2'–0" WIDE CONCRETE CURB AT BUILDING PERIMETER TO CONNECT TO ARMOR FLEX MAT AND BUILDING FOUNDATION – SEE CIVIL DETAIL B/C–4
50. DESIGNATED PARKING STALLS FOR LIFEGUARDS – SEE SIGNAGE DETAIL 13/A5.0

Site Plan Notes

1. SEE CIVIL PLANS FOR: LOCATION AND DETAILS OF HARDSCAPE WALKS AND DRIVEWAYS, RAMPS, HANDRAILS, GUARDRAILS, FREE STANDING PLANTERS & RETAINING WALLS.
2. GRADING PLAN IS PART OF THIS PERMIT, SEE CIVIL PLANS FOR: ALL SITE DIMENSIONS NOT SHOWN ON THIS PLAN, DRAINAGE ELEVATIONS, SITE UTILITIES, CURBS, SITE RETAINING WALLS AND DETAILS. VERIFY ALL DIMENSIONS WITH CIVIL DRAWINGS
3. CONTRACTOR TO VERIFY EXISTING CONDITIONS AND OBTAIN SEPARATE DEMOLITION PERMIT PRIOR TO COMMENCEMENT OF ANY WORK. REMOVE ALL EXISTING WALLS, STRUCTURES, FENCES, A/C OR CONCRETE PAVING, ETC. AS REQUIRED FOR NEW CONSTRUCTION. SEE SHEET A1.0 AND CIVIL PLAN FOR ADDITIONAL INFORMATION
4. CONTRACTOR TO CONFIRM ALL UTILITY LOCATIONS PRIOR TO GRADING
5. NEAREST BUS STOP IS LOCATED APPROX. (1) MILE AWAY, LOCATED AT THE CORNER OF MISSION BLVD. AND MISSION BAY DRIVE.
6. PROPOSED STATION TO CONNECT TO EXISTING UTILITIES
7. CONTRACTOR TO POTHOLE EXISTING SEWER LINE AT NEW LATERAL TO CONFIRM I.E. 8.31'
8. PROPOSED PRIVATE UNDERGROUND SEWER FACILITIES LOCATED WITHIN A SINGLE LOT SHALL BE DESIGNED TO MEET THE REQUIREMENTS OF THE CALIFORNIA UNIFORM PLUMBING CODE AND SHALL BE REVIEWED AS PART OF THE BUILDING PERMIT PLAN CHECK.
9. ALL NEW ON SITE UTILITIES SHALL BE PLACED UNDERGROUND U.N.O. ON THIS PLAN. SEE CIVIL PLANS
10. STREET ADDRESS SHALL BE LOCATED IN ACCORDANCE WITH THE MUNICIPAL CODE. SEE EXTERIOR ELEVATIONS FOR LOCATIONS
11. ALL PROPERTY LINES, BUILDINGS, BOTH EXISTING AND PROPOSED ARE SHOWN ON THIS SITE PLAN SHEET A0.1.
12. HEIGHT CERTIFICATION IS REQUIRED PRIOR TO FRAMING INSPECTION APPROVAL
13. SURFACE WATER WILL DRAIN AWAY FROM BUILDING. SEE CIVIL DRAWINGS
14. POST INDICATOR VALVES, FIRE DEPARTMENT CONNECTIONS, AND ALARM BELL ARE TO BE LOCATED ON THE ADDRESS/ACCESS SIDE OF THE STRUCTURE. UFC 1001.4
15. FIRE ACCESS LANE TO BE DESIGNED FOR WEIGHT OF 95,000 LBS.

Symbols

- ◀ – SYMBOL INDICATES ACCESSIBLE BUILDING ENTRANCES
- ●●●●●● – SYMBOL INDICATES ACCESSIBLE ROUTE TO PUBLIC WAY – (MAX. SLOPE = 5% ; CROSS SLOPE = 1.5% ; SLIP RESISTANT TO BE XXXXX OR BETTER AT ALL NEW SURFACES ALONG PATH)
- – – – – – – – – – INDICATES FIRE LANE & RED CURB. CURBS TO BE PAINTED RED W/ WHITE LETTERS, **"NO PARKING FIRE LANE"** AT A MAXIMUM OF 30 FEET ON CENTER PER CITY OR FIRE DEPT. STANDARDS. PROVIDE FIRE SIGNS AS REQUIRED (SEE KEYNOTE #10)
- – CONCRETE FLAT WORK PER CIVIL PLANS
- – ERROSION CONTROL MAT PER CIVIL PLANS AND SPEC.
- — — — — — INDICATES LIMITS OF WORK & CONSTRUCTION FENCING
- INDICATES EXTENT OF ARMORFLEX CONCRETE MATTRESS AROUND BUILDING PERMITER

SEE SHEET **T2.0** FOR LANDSCAPE NOTES

SEE CITY DOCUMENTS & **SHEET T4.0** FOR SITE DEVELOPMENT CONDITIONS OF APPROVAL, CONTRACTOR NEEDS TO COMPLY WITHIN THE PERMIT REQUIREMENTS.

SEE THIS SHEET, CITY DOCUMENTS, & **SHEET T5.0** FOR COASTAL DEVELOPMENT CONDITIONS OF APPROVAL, CONTRACTOR NEEDS TO COMPLY WITHIN THE PERMIT REQUIREMENTS.

SEE SHEET **A0.2** FOR ENLARGED SITE PLAN

South Mission Beach Lifeguard Station
7001 N. Jetty Road

A-1

Dominy + Associates Architects @ domusstudio
2150 West Washington, Suite 303
San Diego, California 92110
Tel 619.692.9393
Fax 619.692.9394
domusstudio.com

SPEC. NO. 8147

LICENSED ARCHITECT WAYNE POLTL No. C12113 REN 9.30.15 STATE OF CALIFORNIA

PLANS FOR THE CONSTRUCTION OF

South Mission Beach Lifeguard Station

Site Plan - Property Boudries & Parking | A0.1

CITY OF SAN DIEGO, CALIFORNIA
ENGINEERING & CAPITAL PROJECTS
ARCHITECTURAL ENGINEERING & CONTRACTS DIVISION
SHEET 19 OF 94 SHEETS

WBS S-00791

APPROVED: _____ FOR CITY ENGINEER — DATE 10/13/2014

SUBMITTED BY: JIHAD SLEIMAN, PROJECT MANAGER

DESCRIPTION	BY	APPROVED	DATE	FILMED
ORIGINAL	WH/TT			

YOUSIF BENYAMIN, PROJECT ENGINEER
218–1693
CCS27 COORDINATES
1858–6253
CCS83 COORDINATES

CONTRACTOR _____ DATE STARTED _____
INSPECTOR _____ DATE COMPLETED _____

32849–19–D

© COPYRIGHT October 13, 2014 at 8:14AM
Proprietary design. These drawings and design are protected by common law copyright. All patentable material contained herein and originating with Dominy + Associates Architects @ domusstudio LLP shall be the property of Dominy + Associates Architects @ domusstudio LLP

Proprietary design: These drawings and design are protected by common law copyright. All patentable material contained herein and originating with Dominy + Associates Architects @ domusstudio LLP shall be the property of Dominy + Associates Architects @ domusstudio LLP

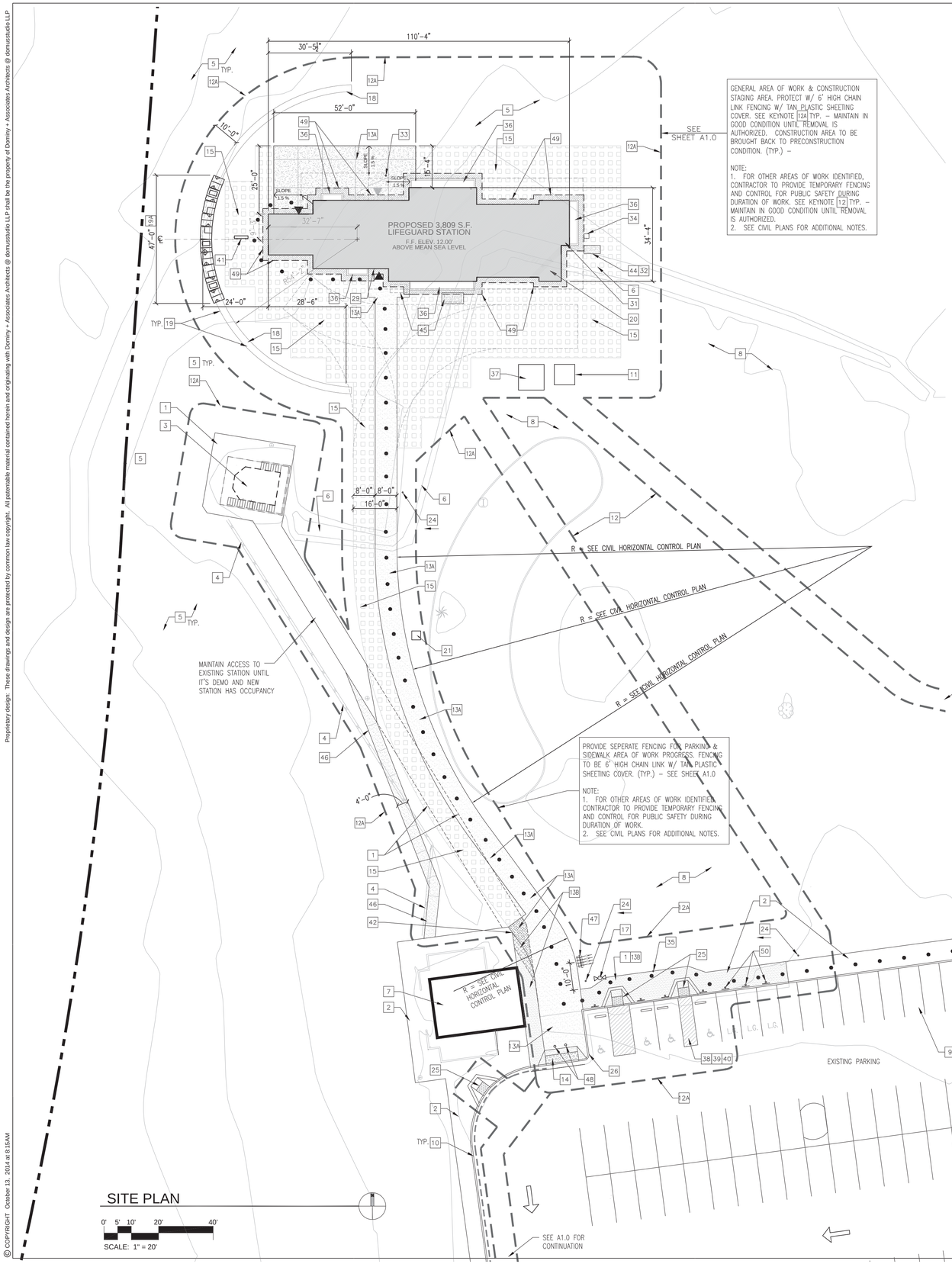

SITE PLAN

0' 5' 10' 20' 40'

SCALE: 1" = 20'

Site Plan Keyed Notes (A0.1 and A0.2)

1. EXISTING CONCRETE WALK TO BE DEMOLISHED. SEE CIVIL PLANS FOR EXTENT OF DEMOLITION AND A1.0 FOR PHASING.
2. EXISTING CONCRETE WALK TO REMAIN.
3. REMAINING EXISTING LIFEGUARD BUILDING AND ELECTRICAL SERVICE TO BE REMOVED AFTER THE NEW LIFEGUARD BUILDING IS COMPLETED AND OPERATIONAL WITH OCCUPANCY. CONTRACTOR TO VERIFY DEMOLITION SEQUENCE. CAP ALL UTILITIES BELOW GRADE AFTER DEMO – TO MUNICIPAL AND FRANCHISE UTILITY STANDARDS. SEE CIVIL AND ELECTRICAL PLANS. RESTORE GRADE AND SAND FINISH TO MATCH EXISTING.
4. EXISTING FENCE RAIL TO BE DEMOLISHED. SEE CIVIL PLANS FOR EXTENT OF DEMOLITION AND A1.0 FOR PHASING.
5. EXISTING RIP RAP NEAR AND AROUND (WITHIN 50' FROM ALL SIDES OF) EXISTING STATION AND NEW STATION EXPOSED DURING GRADING AND / OR DEMO TO BE REMOVED. SEE CIVIL AND SPECIFICATIONS FOR UNIT PRICE PER TON.
6. EXISTING LANDSCAPE BERMS TO BE REMOVED AT LOCATIONS OF SIDEWALK AND EROSION CONTROL MATS. REMAINING DISTURBED EDGES OF LANDSCAPE BERMS TO BE SLOPE BLENDED AND PLANTED TO APPEAR NATURAL AND MATCH EXISTING.
7. EXISTING COMFORT STATION STATION TO REMAIN – NO PROPOSED WORK IN THIS FACILITY
8. EXISTING LAWN AND LANDSCAPING TO REMAIN.
9. EXISTING PARKING LAYOUT AND STRIPING TO BE UNCHANGED.
10. EXISTING RED CURB TO REMAIN. PROVIDE NEW PAINT.
11. TELEPHONE PULL BOX
12. PROVIDE TEMPORARY 6' HIGH CHAIN LINK FENCE W/ TAN SCREEN WHILE WORK IS BEING DONE. – (SEE A1.0)
12A. PROVIDE 6' HIGH CHAIN LINK FENCE W/ TAN SCREEN AT AREA OF WORK. – (SEE A1.0)
13A. CONCRETE FLAT WORK, DRIVE–ON SURFACE PER CIVIL PLANS. MATCH ELEVATION OF NEW CONCRETE TO EXISTING WHERE NECESSARY.
13B. CONCRETE FLAT WORK WALK–ON SURFACE PER CIVIL PLANS. MATCH ELEVATION OF NEW CONCRETE TO EXISTING WHERE NECESSARY.
14. DRIVEWAY APPROACH. SEE CIVIL DRAWINGS
15. EROSION CONTROL MAT PER CIVIL DRAWINGS.
16. EXISTING LOCATION OF (4) ACCESSIBLE SPACES TO REMAIN.
17. NEW FIRE HYDRANT PER CIVIL DRAWINGS.
18. BELOW GRADE EROSION BARRIER PER STRUCTURAL AND CIVIL DRAWINGS
19. CONCRETE CAP PER STRUCTURAL DRAWINGS.
19A. CONCRETE CAP "BEACH CASTLES" PUBLIC ART – SEE **PA–0.1**
20. MAIN SERVICE ELECTRICAL EQUIPMENT SEE ELECTRICAL AND CIVIL DRAWINGS
21. ELECTRICAL TRANSFORMER. SEE ELECTRICAL PLANS. (COORDINATE DEMO W/ EXISTING TOWER DEMO AND INSTALL OF NEW TRANSFORMER OPERATIONAL W/ NEW STATION)
22. FIRE LANE ENTRANCE SIGN. SEE DETAIL. **16/A5.2**
23. OFF–STREET PARKING SIGN. SEE DETAIL. **12/A5.0**
24. SITE ACCESSIBILITY SIGN. SEE DETAIL. **6/A5.0** (DIRECTIONAL SIGNAGE AS INDICATED BY ARROW)
25. CURB RAMP. SEE CIVIL PLANS AND **19/A5.0** FOR ADDITIONAL INFORMATION.
26. CONCRETE CURB, SEE CIVIL DRAWINGS
27. EXISTING PLANTING AREA TO REMAIN
28. +0'–0" CURB, SEE CIVIL AND LANDSCAPE DRAWINGS
29. KNOX BOX PER FIRE DEPARTMENT REQUIREMENTS, VERIFY LOCATION.
30. EXISTING TRASH AREA TO REMAIN
31. FIRE RISER PER FIRE DEPARTMENT REQUIREMENTS. SEE FIRE PROTECTION PLANS
32. FIRE SERVICE DETECTOR ASSEMBLY, CONCRETE PAD, POST INDICATOR VALVES AND SIGN PER CITY OF SAN DIEGO STANDARD DETAILS AND FIRE DEPARTMENT REQUIREMENTS
33. FLAG POLE PER SPECS WITH BIRD PROOFING ON TOP.
34. WATER SERVICE PRESSURE REDUCING VALVE (PRV) – SEE CIVIL & PLUMBING DWGS.
35. NEW WATER SERVICE & METER –SEE CIVIL DRAWINGS
36. BIOFILTER PLANTER – SEE CIVIL DRAWINGS
37. NEW TRANSFORMER – SEE ELECTRICAL DRAWINGS
38. NEW PARKING STRIPING, TYP. SEE DETAIL **1/A5.0**
39. ACCESSIBLY PARKING SPACE. SEE DETAIL **1/A5.0**
40. PRECAST WHEEL STOP. SEE DETAIL **1/A5.0**
41. CAST IN PLACE CONCRETE WALL W/ BLACK SLATE VENEER – SEE STRUCTURAL DWGS.
42. HATCHED ARREA INDICATES REMOVE AND REPLACE CONCRETE WALK AND CURB – SEE CIVIL DRAWINGS
43. REPLACE EXISTING CRACKED 'ZERO' CURB AND CONCRETE PANELS. PROVIDE NEW CONCRETE WALK ADDITION, PER CITY STANDARDS – SEE CIVIL DRAWINGS
44. FIRE SERVICE PER CIVIL DRAWINGS
45. SAND / OIL SEPARATOR PER CIVIL AND PLUMBING DRAWIINGS
46. PROVIDE APPROXIMATELY 104 LINEAL FEET OF NEW 4'–0" WIDE (MIN.) TEMPORARY CONCRETE WALK PER CITY STANDARDS – SEE CIVIL DRAWINGS
47. BICYCLE RACK – SEE DETAIL **14/A5.6**
48. DEMOUNTABLE POSTS PER CIVIL DRAWINGS
49. INDICATES 2'–0" WIDE CONCRETE CURB AT BUILDING PERIMETER TO CONNECT TO ARMOR FLEX MAT AND BUILDING FOUNDATION – SEE CIVIL DETAIL **B/C–4**
50. DESIGNATED PARKING STALLS FOR LIFEGUARDS – SEE SIGNAGE DETAIL **13/A5.0**

Site Plan Notes

1. SEE CIVIL PLANS FOR: LOCATION AND DETAILS OF HARDSCAPE WALKS AND DRIVEWAYS, RAMPS, HANDRAILS, GUARDRAILS, FREE STANDING PLANTERS & RETAINING WALLS.
2. GRADING PLAN IS PART OF THIS PERMIT, SEE CIVIL PLANS FOR: ALL SITE DIMENSIONS NOT SHOWN ON THIS PLAN, DRAINAGE ELEVATIONS, SITE UTILITIES, CURBS, SITE RETAINING WALLS AND DETAILS. VERIFY ALL DIMENSIONS WITH CIVIL DRAWINGS
3. CONTRACTOR TO VERIFY EXISTING CONDITIONS AND OBTAIN SEPARATE DEMOLITION PERMIT PRIOR TO COMMENCEMENT OF ANY WORK. REMOVE ALL EXISTING WALLS, STRUCTURES, FENCES, A/C OR CONCRETE PAVING, ETC. AS REQUIRED FOR NEW CONSTRUCTION. SEE SHEET A1.0 AND CIVIL PLAN FOR ADDITIONAL INFORMATION
4. CONTRACTOR TO CONFIRM ALL UTILITY LOCATIONS PRIOR TO GRADING
5. NEAREST BUS STOP IS LOCATED APPROX. (1) MILE AWAY, LOCATED AT THE CORNER OF MISSION BLVD. AND MISSION BAY DRIVE.
6. PROPOSED STATION TO CONNECT TO EXISTING UTILITIES
7. CONTRACTOR TO POTHOLE EXISTING SEWER LINE AT NEW LATERAL TO CONFIRM I.E. 8.31'
8. PROPOSED PRIVATE UNDERGROUND SEWER FACILITIES LOCATED WITHIN A SINGLE LOT SHALL BE DESIGNED TO MEET THE REQUIREMENTS OF THE CALIFORNIA UNIFORM PLUMBING CODE AND SHALL BE REVIEWED AS PART OF THE BUILDING PERMIT PLAN CHECK.
9. ALL NEW ON SITE UTILITIES SHALL BE PLACED UNDERGROUND U.N.O. ON THIS PLAN. SEE CIVIL PLANS
10. STREET ADDRESS SHALL BE LOCATED IN ACCORDANCE WITH THE MUNICIPAL CODE. SEE EXTERIOR ELEVATIONS FOR LOCATIONS
11. ALL PROPERTY LINES, BUILDINGS, BOTH EXISTING AND PROPOSED ARE SHOWN ON THIS SITE PLAN SHEET A0.1.
12. HEIGHT CERTIFICATION IS REQUIRED PRIOR TO FRAMING INSPECTION APPROVAL
13. SURFACE WATER WILL DRAIN AWAY FROM BUILDING. SEE CIVIL DRAWINGS
14. POST INDICATOR VALVES, FIRE DEPARTMENT CONNECTIONS, AND ALARM BELL ARE TO BE LOCATED ON THE ADDRESS/ACCESS SIDE OF THE STRUCTURE. UFC 1001.4
15. FIRE ACCESS LANE TO BE DESIGNED FOR WEIGHT OF 95,000 LBS.

Symbols

- ◀ – SYMBOL INDICATES ACCESSIBLE BUILDING ENTRANCES
- ●●●●●● – SYMBOL INDICATES ACCESSIBLE ROUTE TO PUBLIC WAY – (MAX. SLOPE = 5% ; CROSS SLOPE = 1.5% ; SLIP RESISTANT TO BE XXXXX OR BETTER AT ALL NEW SURFACES ALONG PATH)
- – – – – – INDICATES FIRE LANE & RED CURB. CURBS TO BE PAINTED RED W/ WHITE LETTERS, **"NO PARKING FIRE LANE"** AT A MAXIMUM OF 30 FEET ON CENTER PER CITY OR FIRE DEPT. STANDARDS. PROVIDE FIRE SIGNS AS REQUIRED (SEE KEYNOTE #10)
- CONCRETE FLAT WORK PER CIVIL PLANS
- EROSION CONTROL MAT PER CIVIL PLANS AND SPEC.
- — — — INDICATES LIMITS OF WORK & CONSTRUCTION FENCING
- INDICATES EXTENT OF ARMORFLEX CONCRETE MATTRESS AROUND BUILDING PERMITER

South Mission Beach Lifeguard Station
700 N. Jetty Road

A-2

Dominy + Associates Architects @ domusstudio
2150 West Washington, Suite 303
San Diego, California 92110
Tel 619.692.9393
Fax 619.692.9394
domusstudio.com

SPEC. NO. 8147

LICENSED ARCHITECT WAYNE POLLARD No. C12113 REN 9.30.15 STATE OF CALIFORNIA

PLANS FOR THE CONSTRUCTION OF
South Mission Beach Lifeguard Station

Site Plan (Enlarged) | A0.2

CITY OF SAN DIEGO, CALIFORNIA
ENGINEERING & CAPITAL PROJECTS
ARCHITECTURAL ENGINEERING & CONTRACTS DIVISION
SHEET 20 OF 94 SHEETS

APPROVED: FOR CITY ENGINEER — DATE 10/13/2014

DESCRIPTION	BY	APPROVED	DATE	FILMED
ORIGINAL	WH/TT			

CONTRACTOR _____ DATE STARTED _____
INSPECTOR _____ DATE COMPLETED _____

WBS S-00791

SUBMITTED BY:
JIHAD SLEIMAN
PROJECT MANAGER

YOUSIF BENYAMIN
PROJECT ENGINEER

218–1693
CCS27 COORDINATES

1858–6253
CCS83 COORDINATES

32849–20–D

© COPYRIGHT October 13, 2014 at 8:15AM

© COPYRIGHT October 13, 2014 at 8:33AM
Proprietary design: These drawings and design are protected by common law copyright. All patentable material contained herein and originating with Dominy + Associates Architects @ domusstudio LLP shall be the property of Dominy + Associates Architects @ domusstudio LLP

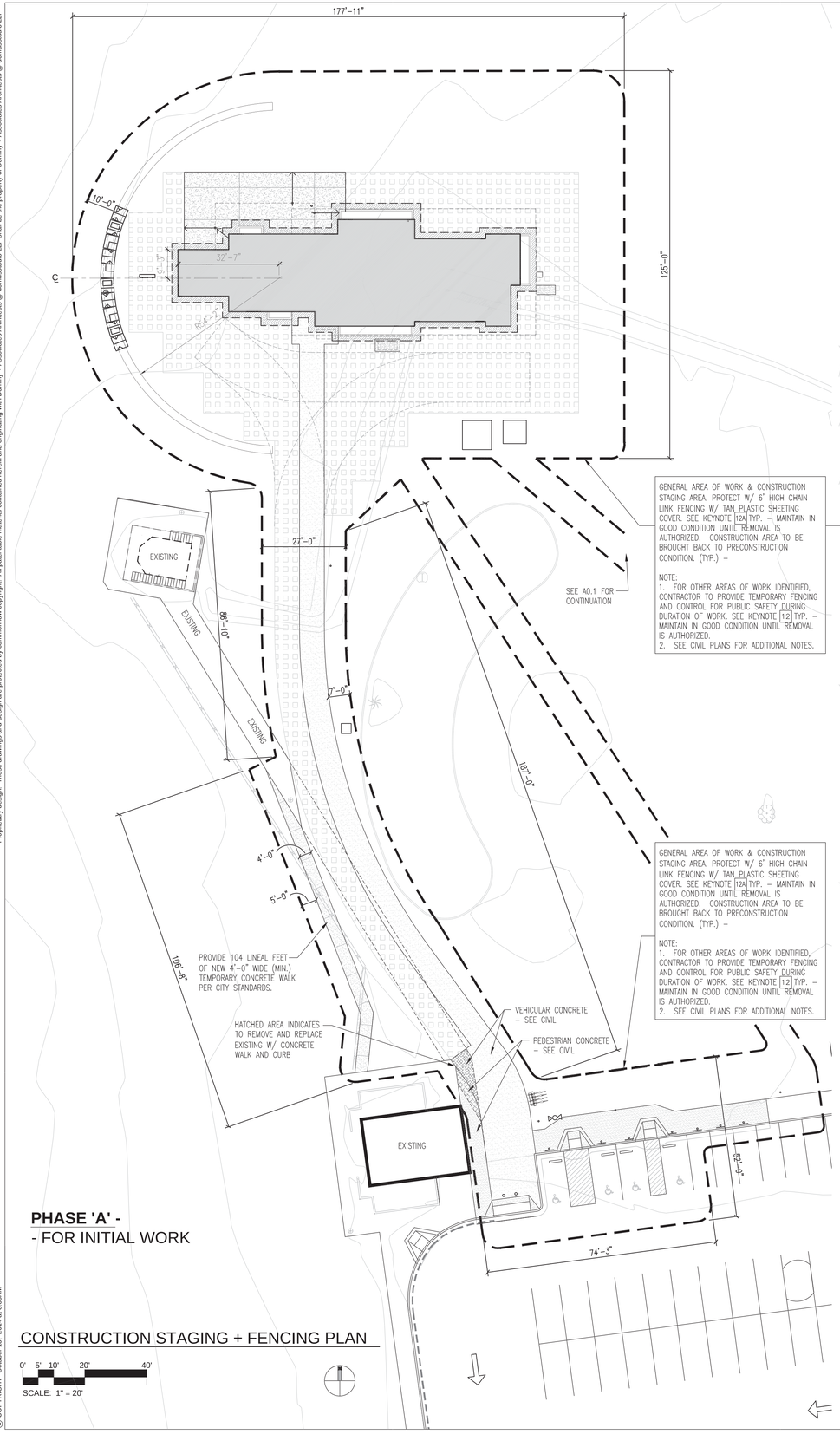

PHASE 'A' -
- FOR INITIAL WORK

CONSTRUCTION STAGING + FENCING PLAN

0' 5' 10' 20' 40'
SCALE: 1" = 20'

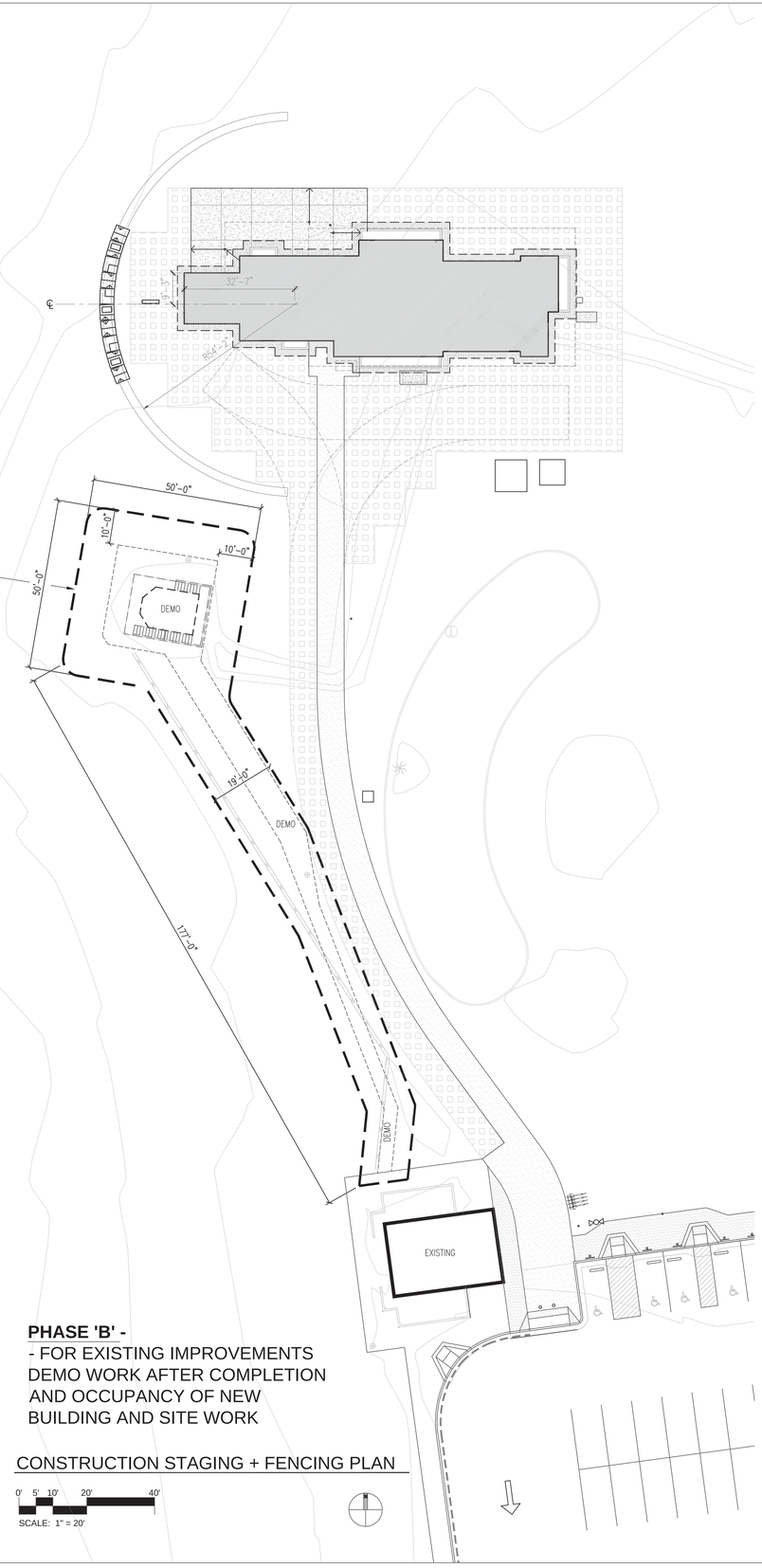

PHASE 'B' -
- FOR EXISTING IMPROVEMENTS DEMO WORK AFTER COMPLETION AND OCCUPANCY OF NEW BUILDING AND SITE WORK

CONSTRUCTION STAGING + FENCING PLAN

0' 5' 10' 20' 40'
SCALE: 1" = 20'

A-3

Dominy + Associates Architects @ domusstudio
2150 West Washington, Suite 303
San Diego, California 92110
Tel 619.692.9393
Fax 619.692.9394
domusstudio.com

SPEC. NO. 8147

LICENSED ARCHITECT WAYNE POLLARD No. C12113 REN 9.30.15 STATE OF CALIFORNIA

PLANS FOR THE CONSTRUCTION OF

South Mission Beach Lifeguard Station

Construction Staging + Fencing Plan | A1.0

CITY OF SAN DIEGO, CALIFORNIA
ENGINEERING & CAPITAL PROJECTS
ARCHITECTURAL ENGINEERING & CONTRACTS DIVISION
SHEET 21 OF 94 SHEETS

WBS S-00791

APPROVED: _____ FOR CITY ENGINEER
10/13/2014 DATE

SUBMITTED BY: JIHAD SLEIMAN PROJECT MANAGER

DESCRIPTION	BY	APPROVED	DATE	FILMED
ORIGINAL	WH/TT			

YOUSIF BENYAMIN PROJECT ENGINEER
218–1693 CCS27 COORDINATES
1858–6253 CCS83 COORDINATES

CONTRACTOR _____ DATE STARTED _____
INSPECTOR _____ DATE COMPLETED _____

32849–21–D

Proprietary design: These drawings and design are protected by common law copyright. All patentable material contained herein and originating with Dominy + Associates Architects @ domusstudio LLP shall be the property of Dominy + Associates Architects @ domusstudio LLP

© COPYRIGHT October 13, 2014 at 7:58AM

General Notes

1. COMPLETE PLANS AND SPECIFICATIONS FOR ALL FIRE EXTINGUISHING SYSTEMS, INCLUDING AUTOMATIC SPRINKLER AND STANDPIPE SYSTEMS AND OTHER SPECIAL FIRE EXTINGUISHING SYSTEMS AND RELATED APPURTENANCES SHALL BE SUBMITTED TO THE CITY OF SAN DIEGO FOR REVIEW AND APPROVAL PRIOR TO INSTALLATION.
2. COMPLETE PLANS AND SPECIFICATIONS FOR ALL FIRE ALARM SYSTEMS SHALL BE SUBMITTED TO THE CITY OF SAN DIEGO DEVELOPMENT SERVICES FOR REVIEW AND APPROVAL PRIOR TO INSTALLATION.

Occupant Loads

ROOM NO.	ROOM NAME	AREA	OCCUPANCY	OCCUPANT LOAD FACTOR	OCCUPANT LOAD	EXITS NEEDED
101	FIRST AID ROOM	269 SF	B	100	3	1
102	RECEP.	248 SF	B	100	3	1
103	LOCKER ROOM #1	250 SF	B	50	5	1
104	LOCKER ROOM #2	250 SF	B	50	5	1
105	RESCUE VEHICLES	627 SF	S2	200	4	1
106	UTILITY #1	126 SF	B	300	1	1
107	UTILITY #2	146 SF	B	300	1	1
108	EQUIP./JAN. RM.	29 SF	B	300	1	1
109	ELECT. RM.	75 SF	B	300	1	1
110	STAIR #1	63 SF	ACCESSORY	00	*	1
112	RESTROOM	52 SF	ACCESSORY	00	*	1
113	STORAGE	75 SF	B	300	1	1
114	BOARD & BUOY STORAGE	166 SF	B	300	1	1
115	TELCOM. RM.	37 SF	B	300	1	1
	TOTAL	2,413 SF			**27**	**1**

Floor Plan Keyed Notes

1. BUILT–IN CABINETRY. SEE INTERIOR ELEVATIONS & FINISH SCHEDULE
2. LINE OF CEILING / ROOF / TRELLIS ABOVE.
3. STEEL PIPE COLUMN PER STRUCT. DWG'S. – PAINTED
4. HOSE BIB. RECESSED IN WALL, TYP. SEE PLUMBING DWG'S.
5. CONCRETE SLAB. FINISH PER FINISH SCHEDULE
6A. "EXIT" TACTILE SIGN – SEE DETAIL **10/A5.0**
6B. "EXIT STAIR DOWN" TACTILE SIGN
7. ELECTRIC WASHER & DRYER. SEE PLUMBING DWG'S & SPECS.
8. LINE OF OVERHEAD DOORS IN OPEN POSITION.
9. FLOOR DRAIN. SEE PLUMBING DWG'S. & DETAIL **15/A5.2** SIM.
10. CANTED GLAZING PER ELEVATION AND WINDOW SCHEDULE
11. WALL MOUNTED UTILITY SINK PER PLUMBING DWG'S.
12. METAL STAIRS. SEE ENLARGED PLAN **A4.1** & STAIR PLAN **A4.2**
13. EXTERIOR GUARDRAIL AT (3RD FLOOR). SEE DETAIL **6, 9, 13/A5.2**
14. FIRE EXTINGUISHER LOCATION: FOR MOUNT, REFER TO SPECS. FOR F.E., ALSO SEE DETAIL **2/A5.4** FOR RECESS MOUNTED (PER PLAN)
15. FLOOR DRAIN PER DETAIL **19/A5.1**
16. MOP SINK. SEE PLUMBING DWG'S AND SPECS.
17. SLIDE–IN ELECTRIC RANGE WITH MICROWAVE / TYPE II EXHAUST HOOD COMBINATION (400 CFM) ABOVE. SEE SPECS. & INSTALL PER MANUFACTURER'S INSTRUCTIONS.
18. SEAMLESS STAINLESS STEEL SINK PER SPEC. HOOK–UP PER PER PLUMBING PLANS. ALSO SEE DETAIL **18/A5.5**
19. UNDER COUNTER DISHWASHER PER SPECIFICATIONS. VERIFY DISHWASHER CLEARANCES. SEE INTERIOR ELEVATIONS.
20. REFRIGERATOR SPACE. PROVIDE WATER & POWER.
21. MICROWAVE OVEN SEE SPECS. & ELECTRICAL DWG'S.
22. GARBAGE DISPOSAL UNDERSINK. PROVIDE POWER & SWITCH @ COUNTER. SEE ELECTRICAL AND PLUMBING PLANS
23. EXHAUST HOOD (TYPE II) – SEE MECHANICAL DWBS.
24. INDIVIDUAL GARAGE DOOR OPERATOR CONTROL SWITCH
25. HVAC SHAFT. SEE MECH. PLANS
26. MECHANICAL EQUIPMENT, SEE MECHANICAL DRAWINGS & DETAIL **17/A5.1**
27. ROOF ACCESS ABOVE. SEE REFLECTED CEILING PLAN AND DETAIL **13/A5.1**
28. SPLASH BLOCK PER DETAIL **1/A5.2**
29. ACCESSIBLE LOCKER (1–TIER) w/ RECESS HANDLE W/ LIFTING TRIGGER HARDWARE – SEE INTERIOR ELEVATIONS & DETAIL **19/A5.0**
30. ROOF BELOW.
31. BUILDING ENTRANCE ACCESSIBLE SIGN PER DETAIL **7/A5.0**
32. DOOR THRESHOLD ON HIGH CURB – SEE DETAIL **17/A5.3**
33. ADJUSTABLE SHELVES, PER INTERIOR ELEVATIONS & SPECS.
34. RECESSED KNOX BOX, PER FIRE AUTHORITY
35. FIRE RISER – SEE CIVIL & PLUMBING FOR CONTINUATION, PROVIDE STAINLESS STEEL CAGE ON TWO SIDES TO ENCLOSE FIRE RISER FULL HEIGHT.
36. FREE STANDING CONCRETE WALL. 12"X18" BLACK SLATE VENEER
37. RECEPTION DESK – SEE DETAIL **15/A5.5**
38. MEDICAL PAC PROVIDED BY OWNER HANGING SYSTEM PROVIDED AND INSTALLED BY CONTRACTOR.
39. MASTER GARAGE DOOR CONTROL PANEL
40. RESCUE GURNEY BED PER SPECS
41. PROVIDE (12) GALV. J–HOOKS FOR HANGING BUOYS – REFER TO OWNER FOR LAYOUT
42. SWIM FINS RACK – HORIZ. PIPE BARS, MOUNT TO CONC. WALL SEE **2/A4.3** & **5/A5.7**
43. READY ROOM COUNTER TOP PER DETAIL **2/A5.5**
44. OBSERVATION ROOM COUNTER TOP PER DETAIL **1/A5.5**
45. ACCESSIBLE CONCRETE SEAT AT FOOTWASH AND FIRST AID – SEE DETAIL **17/A5.2**
46. REMOVABLE BOLLARD – SEE DETAIL **16/A5.0**
47. INDICATES 2'–0" WIDE CONCRETE CURB AT BUILDING PERIMETER TO CONNECT TO ARMOR FLEX MAT AND BUILDING FOUNDATION – SEE CIVIL DETAIL **B/C–4**
48. PAINT EDGE METAL AT THIS RAISED AREA ONLY
49. WET SUIT HANGING RACK
50. CENTRIFUGAL DRYER BY OWNER
51. MECHANICAL LOUVER – SEE **2/A5.2** & MECH. DWGS.
52. ROOF DRAIN OVERFLOW OUTLET – SEE DETAIL **20/A5.1**
53. LINE OF WALL BELOW
54. FLOW–THROUGH PLANTER: BIO–RETENTION SOIL OVER 6" GRAVEL BED W/ PEFORATED PIPE – DISCHARGE THROUGH WEEP HOLES – SEE CIVIL DRAWINGS
55. WATER SERVICE PRESSURE REDUCING VALVE (PRV)
56. FIRE SERVICE DETECTOR ASSEMBLY
57. 6" EXHAUST PIPE PER MECHANICAL DWGS.
58. ICE MACHINE PER SPEC.
59. STAINLESS STEEL CORNER GUARD PER SPEC – SEE DETAIL **5/A5.4**
60. ACCESSIBLE SHOWER STALL – SEE DETAIL **12/A5.6**
61. NON–ACCESSIBLE SHOWER STALL – SEE DETAIL **12/A5.5 & 16/A5.6**
62. TRANSLUCENT RESIN PANEL 'CROSS' SEE DETAIL **10/A5.2**
63. WALL RACK FOR RESCUE BOARDS, SEE DETAIL **2/A5.7**
64. 12" HIGH WOOD FRAMED PLATFORM – SEE DETAIL **8 & 12/A5.7**
65. 1–GALLON PLANTS [MUHLENBERGIA RIGENS (DEER GRASS)] AT FLOW–THROUGH STORMWATER PLANTERS (NON–IRRIGATED)

Floor Plan Notes

1. SYMBOL WX INDICATES WALL TYPE. SEE SHEET **A6.2** FOR WALL ASSEMBLY INFO.
2. DIMENSIONS ARE TO FACE OF CONCRETE OR FACE OF BLOCK UNLESS NOTED OTHERWISE.
3. TYPICAL EXTERIOR WALL ASSEMBLY W1 UNLESS NOTED OTHERWISE ON ARCHITECTURAL OR STRUCTURAL PLANS.
4. TYPICAL INTERIOR WALL ASSEMBLY W1 OR W2 UNLESS NOTED OTHERWISE ON ARCHITECTURAL OR STRUCTURAL PLANS.
5. PROVIDE APPROPRIATE WALL DEPTH WHERE ANY EQUIPMENT IS TO BE RECESSED IN WALL.
6. METAL STUD WALLS AT NON–BEARING, NON–SHEAR WALL LOCATIONS. SEE ASSEMBLY NOTES ON SHT. A6.2
7. SLOPE FLOORS TO DRAINS AS SHOWN ON ARCHITECTURAL FLOOR PLANS, PLUMBING PLANS.
8. WHERE ADDITIONAL DOOR ARE INSTALLED FOR EGRESS PURPOSES, THEY SHALL CONFORM TO ALL REQUIREMENTS OF CHAPTER 10, CBC SEC. 1003.3.1.1
9. FOR TIE ROD SPACING & CORNER LAYOUT OF CAST–IN–PLACE CONCRETE SEE DETAILS 8&12 A5.2.

SYMBOLS

ISA = INTERNATIONAL SYMBOL OF ACCESSIBILITY – SEE DETAIL **7/A5.0**
FE = FIRE EXTINGUISHER – SEE DETAIL **2/A5.4**

Wall Legend

- CAST IN PLACE CONCRETE WALLS – SEE STRUCTURAL DRAWINGS
- MASONRY WALLS – SEE STRUCTURAL DRAWINGS
- STUD WALLS – SEE STRUCTURAL DRAWINGS
- 2–HR FIRE RATED WALL – ASSEMBLY W2 U.O.N. – SEE **A6.2**
- 1–HR FIRE RATED WALL – ASSEMBLY W5 U.O.N. – SEE **A6.2**

NOTE: FOR RATED PENETRATION DETAILS – SEE DETAIL **20/A5.5**

INDICATES 2'–0" WIDE CONCRETE CURB AT BUILDING PERIMETER TO CONNECT TO ARMOR FLEX MAT AND BUILDING FOUNDATION – SEE CIVIL DETAIL **B/C–4**

X DOOR NUMBER: SEE DOOR SCHEDULE A6.0

X WINDOW TYPE: SEE WINDOW SCHEDULE A6.1

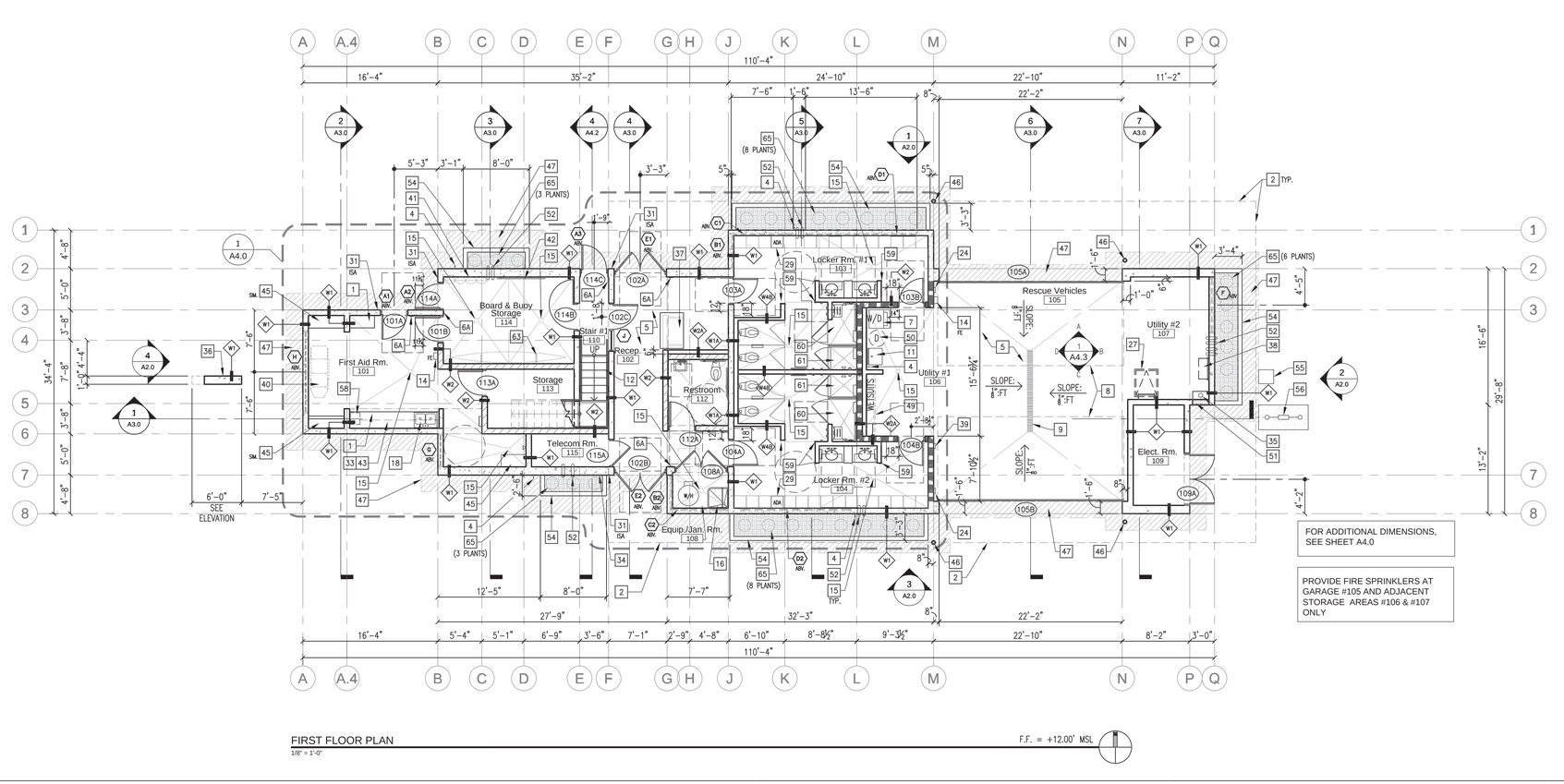

FIRST FLOOR PLAN
1/8" = 1'–0"

F.F. = +12.00' MSL

FOR ADDITIONAL DIMENSIONS, SEE SHEET A4.0

PROVIDE FIRE SPRINKLERS AT GARAGE #105 AND ADJACENT STORAGE AREAS #106 & #107 ONLY

A-4

Dominy + Associates Architects @ domusstudio
2150 West Washington, Suite 303
San Diego, California 92110
Tel 619.692.9393
Fax 619.692.9394
domusstudio.com

SPEC. NO. 8147

LICENSED ARCHITECT WAYNE HOLTON No. C12115 REN 9.30.15 STATE OF CALIFORNIA

PLANS FOR THE CONSTRUCTION OF

South Mission Beach Lifeguard Station

First Floor Plan — A1.1

CITY OF SAN DIEGO, CALIFORNIA
ENGINEERING & CAPITAL PROJECTS
ARCHITECTURAL ENGINEERING & CONTRACTS DIVISION
SHEET 22 OF 94 SHEETS

APPROVED: _____ FOR CITY ENGINEER — DATE 10/13/2014

WBS S-00791

SUBMITTED BY: JIHAD SLEIMAN, PROJECT MANAGER

DESCRIPTION	BY	APPROVED	DATE	FILMED
ORIGINAL	WH/TT			

YOUSIF BENYAMIN, PROJECT ENGINEER
218–1693
CCS27 COORDINATES
1858–6253
CCS83 COORDINATES

CONTRACTOR _____ DATE STARTED _____
INSPECTOR _____ DATE COMPLETED _____

32849–22–D

Proprietary design: These drawings and design are protected by common law copyright. All patentable material contained herein and originating with Dominy + Associates Architects @ domusstudio LLP shall be the property of Dominy + Associates Architects @ domusstudio LLP

© COPYRIGHT October 13, 2014 at 7:54AM

South Mission Beach Lifeguard Station
San Diego, California

General Notes

1. COMPLETE PLANS AND SPECIFICATIONS FOR ALL FIRE EXTINGUISHING SYSTEMS, INCLUDING AUTOMATIC SPRINKLER AND STANDPIPE SYSTEMS AND OTHER SPECIAL FIRE EXTINGUISHING SYSTEMS AND RELATED APPURTENANCES SHALL BE SUBMITTED TO THE CITY OF SAN DIEGO FOR REVIEW AND APPROVAL PRIOR TO INSTALLATION.
2. COMPLETE PLANS AND SPECIFICATIONS FOR ALL FIRE ALARM SYSTEMS SHALL BE SUBMITTED TO THE CITY OF SAN DIEGO DEVELOPMENT SERVICES FOR REVIEW AND APPROVAL PRIOR TO INSTALLATION.

Floor Plan Keyed Notes

1. BUILT–IN CABINETRY. SEE INTERIOR ELEVATIONS & FINISH SCHEDULE
2. LINE OF CEILING / ROOF / TRELLIS ABOVE.
3. STEEL PIPE COLUMN PER STRUCT. DWG'S. – PAINTED
4. HOSE BIB. RECESSED IN WALL, TYP. SEE PLUMBING DWG'S.
5. CONCRETE SLAB. FINISH PER FINISH SCHEDULE
6A. "EXIT" TACTILE SIGN – SEE DETAIL **10/A5.0**
6B. "EXIT STAIR DOWN" TACTILE SIGN
7. ELECTRIC WASHER & DRYER. SEE PLUMBING DWG'S & SPECS.
8. LINE OF OVERHEAD DOORS IN OPEN POSITION.
9. FLOOR DRAIN. SEE PLUMBING DWG'S. & DETAIL **15/A5.2** SIM.
10. CANTED GLAZING PER ELEVATION AND WINDOW SCHEDULE
11. WALL MOUNTED UTILITY SINK PER PLUMBING DWG'S.
12. METAL STAIRS. SEE ENLARGED PLAN **A4.1** & STAIR PLAN **A4.2**
13. EXTERIOR GUARDRAIL AT (3RD FLOOR). SEE DETAIL **6, 9, 13/A5.2**
14. FIRE EXTINGUISHER LOCATION: FOR MOUNT, REFER TO SPECS. FOR F.E., ALSO SEE DETAIL **2/A5.4** FOR RECESS MOUNTED (PER PLAN)
15. FLOOR DRAIN PER DETAIL **19/A5.1**
16. MOP SINK. SEE PLUMBING DWG'S AND SPECS.
17. SLIDE–IN ELECTRIC RANGE WITH MICROWAVE / TYPE II EXHAUST HOOD COMBINATION (400 CFM) ABOVE. SEE SPECS. & INSTALL PER MANUFACTURER'S INSTRUCTIONS.
18. SEAMLESS STAINLESS STEEL SINK PER SPEC. HOOK–UP PER PER PLUMBING PLANS. ALSO SEE DETAIL **18/A5.5**
19. UNDER COUNTER DISHWASHER PER SPECIFICATIONS. VERIFY DISHWASHER CLEARANCES. SEE INTERIOR ELEVATIONS.
20. REFRIGERATOR SPACE. PROVIDE WATER & POWER.
21. MICROWAVE OVEN SEE SPECS. & ELECTRICAL DWG'S.
22. GARBAGE DISPOSAL UNDERSINK. PROVIDE POWER & SWITCH @ COUNTER. SEE ELECTRICAL AND PLUMBING PLANS
23. EXHAUST HOOD (TYPE II) – SEE MECHANICAL DWBS.
24. INDIVIDUAL GARAGE DOOR OPERATOR CONTROL SWITCH
25. HVAC SHAFT. SEE MECH. PLANS
26. MECHANICAL EQUIPMENT, SEE MECHANICAL DRAWINGS & DETAIL **17/A5.1**
27. ROOF ACCESS ABOVE. SEE REFLECTED CEILING PLAN AND DETAIL **13/A5.1**
28. SPLASH BLOCK PER DETAIL **1/A5.2**
29. ACCESSIBLE LOCKER (1–TIER) w/ RECESS HANDLE W/ LIFTING TRIGGER HARDWARE – SEE INTERIOR ELEVATIONS & DETAIL **19/A5.0**
30. ROOF BELOW.
31. BUILDING ENTRANCE ACCESSIBLE SIGN PER DETAIL **7/A5.0**
32. DOOR THRESHOLD ON HIGH CURB – SEE DETAIL **17/A5.3**
33. ADJUSTABLE SHELVES, PER INTERIOR ELEVATIONS & SPECS.
34. RECESSED KNOX BOX, PER FIRE AUTHORITY
35. FIRE RISER – SEE CIVIL & PLUMBING FOR CONTINUATION, PROVIDE STAINLESS STEEL CAGE ON TWO SIDES TO ENCLOSE FIRE RISER FULL HEIGHT.
36. FREE STANDING CONCRETE WALL. 12"X18" BLACK SLATE VENEER
37. RECEPTION DESK – SEE DETAIL **15/A5.5**
38. MEDICAL PAC PROVIDED BY OWNER HANGING SYSTEM PROVIDED AND INSTALLED BY CONTRACTOR.
39. MASTER GARAGE DOOR CONTROL PANEL
40. RESCUE GURNEY BED PER SPECS
41. PROVIDE (12) GALV. J–HOOKS FOR HANGING BUOYS – REFER TO OWNER FOR LAYOUT
42. SWIM FINS RACK – HORIZ. PIPE BARS, MOUNT TO CONC. WALL SEE **2/A4.3** & **5/A5.7**
43. READY ROOM COUNTER TOP PER DETAIL **2/A5.5**
44. OBSERVATION ROOM COUNTER TOP PER DETAIL **1/A5.5**
45. ACCESSIBLE CONCRETE SEAT AT FOOTWASH AND FIRST AID – SEE DETAIL **17/A5.2**
46. REMOVABLE BOLLARD – SEE DETAIL **16/A5.0**
47. INDICATES 2'–0" WIDE CONCRETE CURB AT BUILDING PERIMETER TO CONNECT TO ARMOR FLEX MAT AND BUILDING FOUNDATION – SEE CIVIL DETAIL **B/C–4**
48. PAINT EDGE METAL AT THIS RAISED AREA ONLY
49. WET SUIT HANGING RACK
50. CENTRIFUGAL DRYER BY OWNER
51. MECHANICAL LOUVER – SEE **2/A5.2** & MECH. DWGS.
52. ROOF DRAIN OVERFLOW OUTLET – SEE DETAIL **20/A5.1**
53. LINE OF WALL BELOW
54. FLOW–THROUGH PLANTER: BIO–RETENTION SOIL OVER 6" GRAVEL BED W/ PEFORATED PIPE – DISCHARGE THROUGH WEEP HOLES – SEE CIVIL DRAWINGS
55. WATER SERVICE PRESSURE REDUCING VALVE (PRV)
56. FIRE SERVICE DETECTOR ASSEMBLY
57. 6" EXHAUST PIPE PER MECHANICAL DWGS.
58. ICE MACHINE PER SPEC.
59. STAINLESS STEEL CORNER GUARD PER SPEC – SEE DETAIL **5/A5.4**
60. ACCESSIBLE SHOWER STALL – SEE DETAIL **12/A5.6**
61. NON–ACCESSIBLE SHOWER STALL – SEE DETAIL **12/A5.5 & 16/A5.6**
62. TRANSLUCENT RESIN PANEL 'CROSS' SEE DETAIL **10/A5.2**
63. WALL RACK FOR RESCUE BOARDS, SEE DETAIL **2/A5.7**
64. 12" HIGH WOOD FRAMED PLATFORM – SEE DETAIL **8 & 12/A5.7**
65. 1–GALLON PLANTS [MUHLENBERGIA RIGENS (DEER GRASS)] AT FLOW–THROUGH STORMWATER PLANTERS (NON–IRRIGATED)

Floor Plan Notes

1. SYMBOL WX INDICATES WALL TYPE. SEE SHEET **A6.2** FOR WALL ASSEMBLY INFO.
2. DIMENSIONS ARE TO FACE OF CONCRETE OR FACE OF BLOCK UNLESS NOTED OTHERWISE.
3. TYPICAL EXTERIOR WALL ASSEMBLY W1 UNLESS NOTED OTHERWISE ON ARCHITECTURAL OR STRUCTURAL PLANS.
4. TYPICAL INTERIOR WALL ASSEMBLY W1 OR W2 UNLESS NOTED OTHERWISE ON ARCHITECTURAL OR STRUCTURAL PLANS.
5. PROVIDE APPROPRIATE WALL DEPTH WHERE ANY EQUIPMENT IS TO BE RECESSED IN WALL.
6. METAL STUD WALLS AT NON–BEARING, NON–SHEAR WALL LOCATIONS. SEE ASSEMBLY NOTES ON SHT. A6.2
7. SLOPE FLOORS TO DRAINS AS SHOWN ON ARCHITECTURAL FLOOR PLANS, PLUMBING PLANS.
8. WHERE ADDITIONAL DOOR ARE INSTALLED FOR EGRESS PURPOSES, THEY SHALL CONFORM TO ALL REQUIRMENTS OF CHAPTER 10, CBC SEC. 1003.3.1.1
9. FOR TIE ROD SPACING & CORNER LAYOUT OF CAST–IN–PLACE CONCRETE SEE DETAILS 8&12 A5.2.

SYMBOLS

ISA = INTERNATIONAL SYMBOL OF ACCESSIBILITY – SEE DETAIL **7/A5.0**
FE = FIRE EXTINGUISHER – SEE DETAIL **2/A5.4**

Wall Legend

- CAST IN PLACE CONCRETE WALLS – SEE STRUCTURAL DRAWINGS
- MASONRY WALLS – SEE STRUCTURAL DRAWINGS
- STUD WALLS – SEE STRUCTURAL DRAWINGS
- 2–HR FIRE RATED WALL – ASSEMBLY W2 U.O.N. – SEE **A6.2**
- 1–HR FIRE RATED WALL – ASSEMBLY W5 U.O.N. – SEE **A6.2**

NOTE: FOR RATED PENETRATION DETAILS – SEE DETAIL **20/A5.5**

INDICATES 2'–0" WIDE CONCRETE CURB AT BUILDING PERIMETER TO CONNECT TO ARMOR FLEX MAT AND BUILDING FOUNDATION – SEE CIVIL DETAIL **B/C–4**

(X) DOOR NUMBER: SEE DOOR SCHEDULE A6.0

(X) WINDOW TYPE: SEE WINDOW SCHEDULE A6.1

Occupant Loads

ROOM NO.	ROOM NAME	AREA	OCCUPANCY	OCCUPANT LOAD FACTOR	OCCUPANT LOAD	EXITS NEEDED
200	READY RM.	195 SF	B	100	2	1
201	RESTROOM	46 SF	ACCESSORY	00	*	1
202	ADMIN.	77 SF	B	100	1	1
203	STORAGE	11 SF	B	300	1	1
204	STAIR #2	56 SF	ACCESSORY	00	*	1
	TOTAL	385 SF			**4**	1
(FROM LEVEL ABOVE) 301	OBSERVATION LEVEL	125 SF	B	100	2	1
	TOTAL	**125 SF**			**2**	1

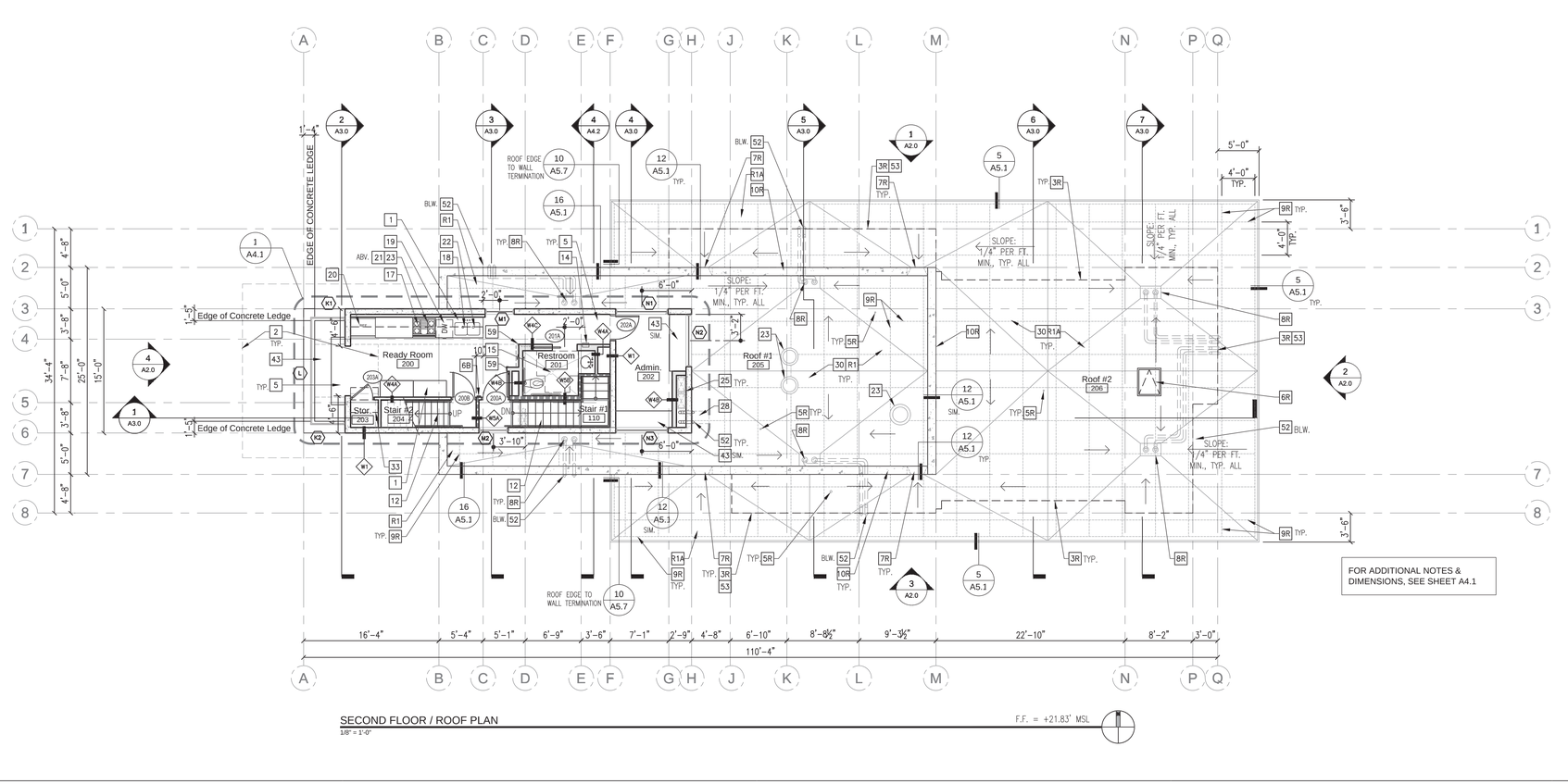

SECOND FLOOR / ROOF PLAN
1/8" = 1'-0"

F.F. = +21.83' MSL

Roof Plan Keyed Notes

R1A. LOW SLOPE ROOF MEMBRANE PER (SPECS) W/ TAPERED INSULATION – (ROOF TYPE 'R1A' ON SHEET **A6.2**). 1/4" PER FOOT MIN. SLOPE – FOR ROOF DETAILS SEE SHEET **A5.1**, FOR TAPERED INSULATION LAYOUT SEE **8/A5.1**

R1. LOW SLOPE ROOF MEMBRANE PER (SPECS) W/ TAPERED INSULATION & INSULATION BLANKET – (ROOF TYPE 'R1' ON SHEET **A6.2**). 1/4" PER FOOT MIN. SLOPE – FOR ROOF DETAILS SEE SHEET **A5.1**, FOR TAPERED INSULATION LAYOUT SEE **8/A5.1**

2R. CRICKET – SEE DETAIL **9 & 10/A5.1** & ROOF PLAN NOTES BELOW.

3R. LINE OF WALL BELOW

4R. MECHANICAL EQUIPMENT, SEE MECHANICAL DRAWINGS

5R. VENT PIPE / INTAKE / EXHAUST, PER M.E.P. DRAWINGS HVAC EQUIPMENT – SEE DETAIL **15/A5.1**

6R. ROOF HATCH, SEE DETAIL **13/A5.1**

7R. THRU–WALL SCUPPER, SEE DETAIL **12/A5.1**

8R. ROOF DRAIN AND ROOF OVERFLOW DRAIN, SEE DETAIL **6/A5.1**

9R. BIRD WIRE PER SPECS – LOCATE AT 4'–0" O.C.

10R. PARAPET SLOPE AT 45° – SEE DETAIL **18/A5.1**

Roof Plan Notes

1. ALL ROOF CONSTRUCTION SHOWN ON THIS SHEET IS ROOF ASSEMBLY R1 R2 U.N.O. SEE SHEET **A6.2** FOR ROOF CLASSIFICATION SCHEDULE.
2. HEIGHT INDICATED ON THIS PLAN ARE TO TOP OF ROOF DECK UNLESS NOTED OTHERWISE. HEIGHTS ARE MEASURED FROM TOP OF MAIN FLOOR CONCRETE SLAB. (0'–0")
3. MINIMUM ROOF SLOPES, INCLUDING CRICKETS, TO BE 3/8" PER FOOT U.N.O. MINIMUM SLOPE AT CROSS FALLS TO BE 1/4" PER FOOT.
4. DS : DOWN SPOUT
   RD : ROOF DRAIN
   OF : OVERFLOW
   T.O.P. : TOP OF PARAPET
   T.O. PLY : TOP OF PLYWOOD
5. DOWN SPOUTS, ROOF DRAINS AND OVERFLOWS TO RUN OUTSIDE WALL, UNLESS NOTED OTHERWISE. SEE PLUMBING PLANS FOR CONTINUATION.
6. OVERFLOW DRAINS SHALL DISCHARGE TO AN APPROVED LOCATION AND SHALL NOT BE CONNECTED TO ROOF DRAIN LINES (C.B.C. 1506)
7. REQUIRED ROOF : MINIMUM OF CLASS **A** PER UBC TABLE 15–A
8. PLUMBING VENTS TO BE GANGED TO MINIMIZE ROOF PENETRATIONS.
9. SUPPLY AND INSTALL GALVANIZED SHEET METAL ROOF JACKS FOR VENTING. VENTS SHALL BE GANGED TOGETHER AND ROUTED TO BACKSIDE OF ROOF TO PENETRATE ROOF AS DIRECTED BY ARCHITECT, (MIN. 18" FROM FASCIA & 18" MIN. FROM RIDGES).

A-5

Dominy + Associates Architects @ domusstudio
2150 West Washington, Suite 303
San Diego, California 92110

Tel 619.692.9393
Fax 619.692.9394
domusstudio.com

SPEC. NO. 8147

LICENSED ARCHITECT WAYNE POLITO No. C12115 REN 9.30.15 STATE OF CALIFORNIA

PLANS FOR THE CONSTRUCTION OF

South Mission Beach Lifeguard Station

Second Floor + Roof Plan — **A1.2**

CITY OF SAN DIEGO, CALIFORNIA
ENGINEERING & CAPITAL PROJECTS
ARCHITECTURAL ENGINEERING & CONTRACTS DIVISION
SHEET 23 OF 94 SHEETS

WBS S-00791

APPROVED: _____ FOR CITY ENGINEER — 10/13/2014 DATE

SUBMITTED BY: JIHAD SLEIMAN, PROJECT MANAGER

DESCRIPTION	BY	APPROVED	DATE	FILMED
ORIGINAL	WH/TT			

YOUSIF BENYAMIN, PROJECT ENGINEER
218–1693
CCS27 COORDINATES
1858–6253
CCS83 COORDINATES

CONTRACTOR _____ DATE STARTED _____
INSPECTOR _____ DATE COMPLETED _____

32849–23–D

Proprietary design: These drawings and design are protected by common law copyright. All patentable material contained herein and originating with Dominy + Associates Architects @ domusstudio LLP shall be the property of Dominy + Associates Architects @ domusstudio LLP

© COPYRIGHT October 13, 2014 at 7:35AM

General Notes

1. COMPLETE PLANS AND SPECIFICATIONS FOR ALL FIRE EXTINGUISHING SYSTEMS, INCLUDING AUTOMATIC SPRINKLER AND STANDPIPE SYSTEMS AND OTHER SPECIAL FIRE EXTINGUISHING SYSTEMS AND RELATED APPURTENANCES SHALL BE SUBMITTED TO THE CITY OF SAN DIEGO FOR REVIEW AND APPROVAL PRIOR TO INSTALLATION.
2. COMPLETE PLANS AND SPECIFICATIONS FOR ALL FIRE ALARM SYSTEMS SHALL BE SUBMITTED TO THE CITY OF SAN DIEGO DEVELOPMENT SERVICES FOR REVIEW AND APPROVAL PRIOR TO INSTALLATION.

Floor Plan Keyed Notes

1. BUILT–IN CABINETRY. SEE INTERIOR ELEVATIONS & FINISH SCHEDULE
2. LINE OF CEILING / ROOF / TRELLIS ABOVE.
3. STEEL PIPE COLUMN PER STRUCT. DWG'S. – PAINTED
4. HOSE BIB. RECESSED IN WALL, TYP. SEE PLUMBING DWG'S.
5. CONCRETE SLAB. FINISH PER FINISH SCHEDULE
6A. "EXIT" TACTILE SIGN – SEE DETAIL **10/A5.0**
6B. "EXIT STAIR DOWN" TACTILE SIGN
7. ELECTRIC WASHER & DRYER. SEE PLUMBING DWG'S & SPECS.
8. LINE OF OVERHEAD DOORS IN OPEN POSITION.
9. FLOOR DRAIN. SEE PLUMBING DWG'S. & DETAIL **15/A5.2** SIM.
10. CANTED GLAZING PER ELEVATION AND WINDOW SCHEDULE
11. WALL MOUNTED UTILITY SINK PER PLUMBING DWG'S.
12. METAL STAIRS. SEE ENLARGED PLAN **A4.1** & STAIR PLAN **A4.2**
13. EXTERIOR GUARDRAIL AT (3RD FLOOR). SEE DETAIL **6, 9, 13/A5.2**
14. FIRE EXTINGUISHER LOCATION: FOR MOUNT, REFER TO SPECS. FOR F.E., ALSO SEE DETAIL **2/A5.4** FOR RECESS MOUNTED (PER PLAN)
15. FLOOR DRAIN PER DETAIL **19/A5.1**
16. MOP SINK. SEE PLUMBING DWG'S AND SPECS.
17. SLIDE–IN ELECTRIC RANGE WITH MICROWAVE / TYPE II EXHAUST HOOD COMBINATION (400 CFM) ABOVE. SEE SPECS. & INSTALL PER MANUFACTURER'S INSTRUCTIONS.
18. SEAMLESS STAINLESS STEEL SINK PER SPEC. HOOK–UP PER PLUMBING PLANS. ALSO SEE DETAIL **18/A5.5**
19. UNDER COUNTER DISHWASHER PER SPECIFICATIONS. VERIFY DISHWASHER CLEARANCES. SEE INTERIOR ELEVATIONS.
20. REFRIGERATOR SPACE. PROVIDE WATER & POWER.
21. MICROWAVE OVEN SEE SPECS. & ELECTRICAL DWG'S.
22. GARBAGE DISPOSAL UNDERSINK. PROVIDE POWER & SWITCH @ COUNTER. SEE ELECTRICAL AND PLUMBING PLANS
23. EXHAUST HOOD (TYPE II) – SEE MECHANICAL DWBS.
24. INDIVIDUAL GARAGE DOOR OPERATOR CONTROL SWITCH
25. HVAC SHAFT. SEE MECH. PLANS
26. MECHANICAL EQUIPMENT, SEE MECHANICAL DRAWINGS & DETAIL **17/A5.1**
27. ROOF ACCESS ABOVE. SEE REFLECTED CEILING PLAN AND DETAIL **13/A5.1**
28. SPLASH BLOCK PER DETAIL **1/A5.2**
29. ACCESSIBLE LOCKER (1–TIER) w/ RECESS HANDLE W/ LIFTING TRIGGER HARDWARE – SEE INTERIOR ELEVATIONS & DETAIL **19/A5.0**
30. ROOF BELOW.
31. BUILDING ENTRANCE ACCESSIBLE SIGN PER DETAIL **7/A5.0**
32. DOOR THRESHOLD ON HIGH CURB – SEE DETAIL **17/A5.3**
33. ADJUSTABLE SHELVES, PER INTERIOR ELEVATIONS & SPECS.
34. RECESSED KNOX BOX, PER FIRE AUTHORITY
35. FIRE RISER – SEE CIVIL & PLUMBING FOR CONTINUATION, PROVIDE STAINLESS STEEL CAGE ON TWO SIDES TO ENCLOSE FIRE RISER FULL HEIGHT.
36. FREE STANDING CONCRETE WALL, 12"X18" BLACK SLATE VENEER
37. RECEPTION DESK – SEE DETAIL **15/A5.5**
38. MEDICAL PAC PROVIDED BY OWNER HANGING SYSTEM PROVIDED AND INSTALLED BY CONTRACTOR.
39. MASTER GARAGE DOOR CONTROL PANEL
40. RESCUE GURNEY BED PER SPECS
41. PROVIDE (12) GALV. J–HOOKS FOR HANGING BUOYS – REFER TO OWNER FOR LAYOUT
42. SWIM FINS RACK – HORIZ. PIPE BARS, MOUNT TO CONC. WALL SEE **2/A4.3** & **5/A5.7**
43. READY ROOM COUNTER TOP PER DETAIL **2/A5.5**
44. OBSERVATION ROOM COUNTER TOP PER DETAIL **1/A5.5**
45. ACCESSIBLE CONCRETE SEAT AT FOOTWASH AND FIRST AID – SEE DETAIL **17/A5.2**
46. REMOVABLE BOLLARD – SEE DETAIL **16/A5.0**
47. INDICATES 2'–0" WIDE CONCRETE CURB AT BUILDING PERIMETER TO CONNECT TO ARMOR FLEX MAT AND BUILDING FOUNDATION – SEE CIVIL DETAIL **B/C–4**
48. PAINT EDGE METAL AT THIS RAISED AREA ONLY
49. WET SUIT HANGING RACK
50. CENTRIFUGAL DRYER BY OWNER
51. MECHANICAL LOUVER – SEE **2/A5.2** & MECH. DWGS.
52. ROOF DRAIN OVERFLOW OUTLET – SEE DETAIL **20/A5.1**
53. LINE OF WALL BELOW
54. FLOW–THROUGH PLANTER: BIO–RETENTION SOIL OVER 6" GRAVEL BED W/ PEFORATED PIPE – DISCHARGE THROUGH WEEP HOLES – SEE CIVIL DRAWINGS
55. WATER SERVICE PRESSURE REDUCING VALVE (PRV)
56. FIRE SERVICE DETECTOR ASSEMBLY
57. 6" EXHAUST PIPE PER MECHANICAL DWGS.
58. ICE MACHINE PER SPEC.
59. STAINLESS STEEL CORNER GUARD PER SPEC – SEE DETAIL **5/A5.4**
60. ACCESSIBLE SHOWER STALL – SEE DETAIL **12/A5.6**
61. NON–ACCESSIBLE SHOWER STALL – SEE DETAIL **12/A5.5 & 16/A5.6**
62. TRANSLUCENT RESIN PANEL 'CROSS' SEE DETAIL **10/A5.2**
63. WALL RACK FOR RESCUE BOARDS, SEE DETAIL **2/A5.7**
64. 12" HIGH WOOD FRAMED PLATFORM – SEE DETAIL **8 & 12/A5.7**
65. 1–GALLON PLANTS [MUHLENBERGIA RIGENS (DEER GRASS)] AT FLOW–THROUGH STORMWATER PLANTERS (NON–IRRIGATED)

Floor Plan Notes

1. SYMBOL (WX) INDICATES WALL TYPE. SEE SHEET **A6.2** FOR WALL ASSEMBLY INFO.
2. DIMENSIONS ARE TO FACE OF CONCRETE OR FACE OF BLOCK UNLESS NOTED OTHERWISE.
3. TYPICAL EXTERIOR WALL ASSEMBLY (W1) UNLESS NOTED OTHERWISE ON ARCHITECTURAL OR STRUCTURAL PLANS.
4. TYPICAL INTERIOR WALL ASSEMBLY (W1) OR (W2) UNLESS NOTED OTHERWISE ON ARCHITECTURAL OR STRUCTURAL PLANS.
5. PROVIDE APPROPRIATE WALL DEPTH WHERE ANY EQUIPMENT IS TO BE RECESSED IN WALL.
6. METAL STUD WALLS AT NON–BEARING, NON–SHEAR WALL LOCATIONS. SEE ASSEMBLY NOTES ON SHT. A6.2
7. SLOPE FLOORS TO DRAINS AS SHOWN ON ARCHITECTURAL FLOOR PLANS, PLUMBING PLANS.
8. WHERE ADDITIONAL DOOR ARE INSTALLED FOR EGRESS PURPOSES, THEY SHALL CONFORM TO ALL REQUIRMENTS OF CHAPTER 10, CBC SEC. 1003.3.1.1
9. FOR TIE ROD SPACING & CORNER LAYOUT OF CAST–IN–PLACE CONCRETE SEE DETAILS 8&12 A5.2.

SYMBOLS

ISA = INTERNATIONAL SYMBOL OF ACCESSIBILITY – SEE DETAIL **7/A5.0**
FE = FIRE EXTINGUISHER – SEE DETAIL **2/A5.4**

Wall Legend

- CAST IN PLACE CONCRETE WALLS – SEE STRUCTURAL DRAWINGS
- MASONRY WALLS – SEE STRUCTURAL DRAWINGS
- STUD WALLS – SEE STRUCTURAL DRAWINGS
- 2–HR FIRE RATED WALL – ASSEMBLY (W2) U.O.N. – SEE **A6.2**
- 1–HR FIRE RATED WALL – ASSEMBLY (W5) U.O.N. – SEE **A6.2**

NOTE: FOR RATED PENETRATION DETAILS – SEE DETAIL **20/A5.5**

INDICATES 2'–0" WIDE CONCRETE CURB AT BUILDING PERIMETER TO CONNECT TO ARMOR FLEX MAT AND BUILDING FOUNDATION – SEE CIVIL DETAIL **B/C–4**

(X) DOOR NUMBER: SEE DOOR SCHEDULE A6.0

(X) WINDOW TYPE: SEE WINDOW SCHEDULE A6.1

Roof Plan Keyed Notes

1A. LOW SLOPE ROOF MEMBRANE PER (SPECS) W/ TAPERED INSULATION – (ROOF TYPE 'R1A' ON SHEET **A6.2**). 1/4" PER FOOT MIN. SLOPE – FOR ROOF DETAILS SEE SHEET **A5.1**, FOR TAPERED INSULATION LAYOUT SEE **8/A5.1**

R1. LOW SLOPE ROOF MEMBRANE PER (SPECS) W/ TAPERED INSULATION & INSULATION BLANKET – (ROOF TYPE 'R1' ON SHEET **A6.2**). 1/4" PER FOOT MIN. SLOPE – FOR ROOF DETAILS SEE SHEET **A5.1**, FOR TAPERED INSULATION LAYOUT SEE **8/A5.1**

2R. CRICKET – SEE DETAIL **9 & 10/A5.1** & ROOF PLAN NOTES BELOW.

3R. LINE OF WALL BELOW

4R. MECHANICAL EQUIPMENT, SEE MECHANICAL DRAWINGS

5R. VENT PIPE / INTAKE / EXHAUST, PER M.E.P. DRAWINGS HVAC EQUIPMENT – SEE DETAIL **15/A5.1**

6R. ROOF HATCH, SEE DETAIL **13/A5.1**

7R. THRU–WALL SCUPPER, SEE DETAIL **12/A5.1**

8R. ROOF DRAIN AND ROOF OVERFLOW DRAIN, SEE DETAIL **6/A5.1**

9R. BIRD WIRE PER SPECS – LOCATE AT 4'–0" O.C.

10R. PARAPET SLOPE AT 45° – SEE DETAIL **18/A5.1**

Roof Plan Notes

1. ALL ROOF CONSTRUCTION SHOWN ON THIS SHEET IS ROOF ASSEMBLY (R1) (R2) U.N.O. SEE SHEET **A6.2** FOR ROOF CLASSIFICATION SCHEDULE.
2. HEIGHT INDICATED ON THIS PLAN ARE TO TOP OF ROOF DECK UNLESS NOTED OTHERWISE. HEIGHTS ARE MEASURED FROM TOP OF MAIN FLOOR CONCRETE SLAB. (0'–0")
3. MINIMUM ROOF SLOPES, INCLUDING CRICKETS, TO BE 3/8" PER FOOT U.N.O. MINIMUM SLOPE AT CROSS FALLS TO BE 1/4" PER FOOT.
4. DS : DOWN SPOUT
   RD : ROOF DRAIN
   OF : OVERFLOW
   T.O.P. : TOP OF PARAPET
   T.O. PLY : TOP OF PLYWOOD
5. DOWN SPOUTS, ROOF DRAINS AND OVERFLOWS TO RUN OUTSIDE WALL, UNLESS NOTED OTHERWISE. SEE PLUMBING PLANS FOR CONTINUATION.
6. OVERFLOW DRAINS SHALL DISCHARGE TO AN APPROVED LOCATION AND SHALL NOT BE CONNECTED TO ROOF DRAIN LINES (C.B.C. 1506)
7. REQUIRED ROOF : MINIMUM OF CLASS **A** PER UBC TABLE 15–A
8. PLUMBING VENTS TO BE GANGED TO MINIMIZE ROOF PENETRATIONS.
9. SUPPLY AND INSTALL GALVANIZED SHEET METAL ROOF JACKS FOR VENTING. VENTS SHALL BE GANGED TOGETHER AND ROUTED TO BACKSIDE OF ROOF TO PENETRATE ROOF AS DIRECTED BY ARCHITECT, (MIN. 18" FROM FASCIA & 18" MIN. FROM RIDGES).

Occupant Loads

ROOM NO.	ROOM NAME	AREA	OCCUPANCY	OCCUPANT LOAD FACTOR	OCCUPANT LOAD	EXITS NEEDED
301	OBSERVATION TOWER	125 SF	B	100	2	1

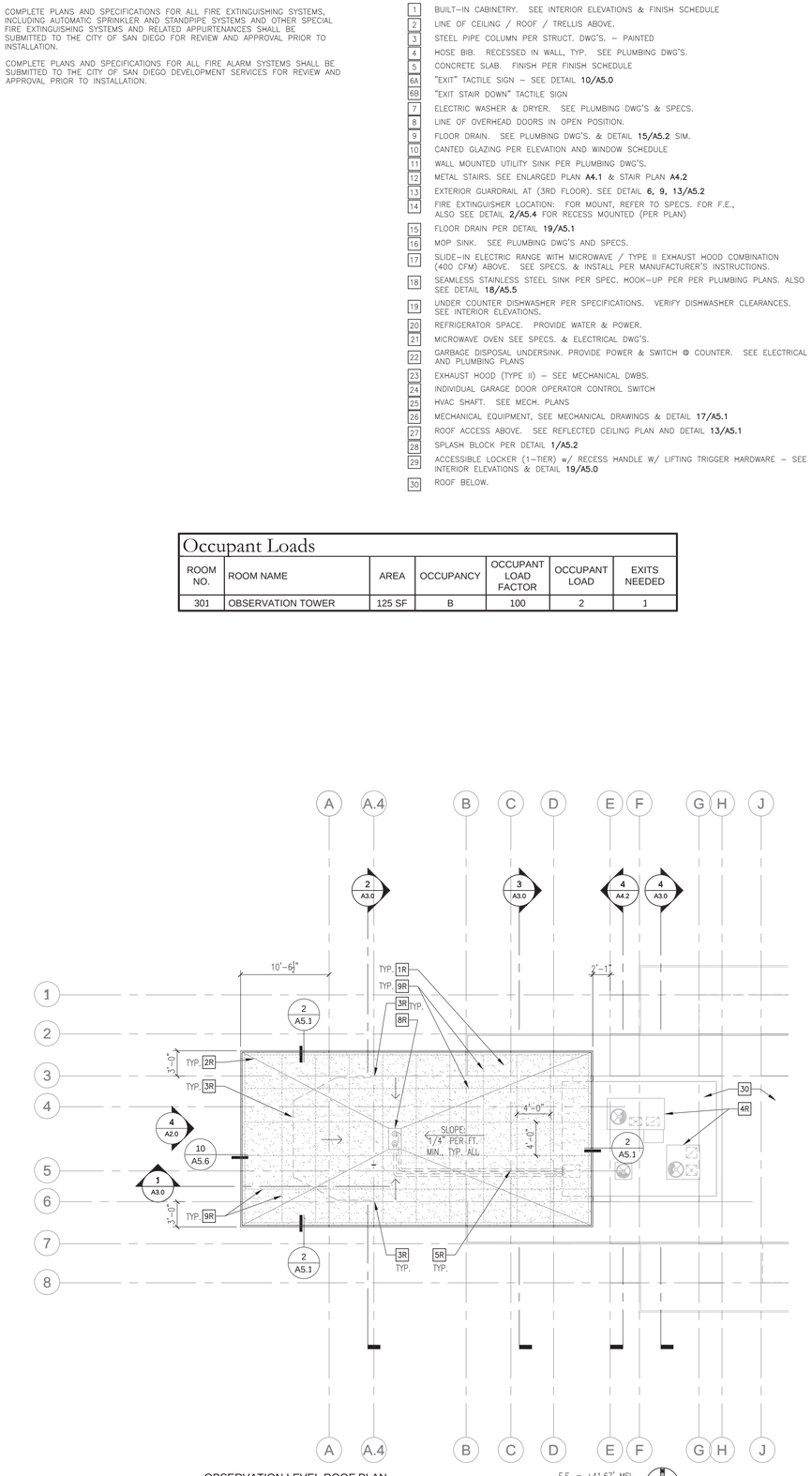

OBSERVATION LEVEL ROOF PLAN
1/8" = 1'–0"
F.F. = +41.67' MSL

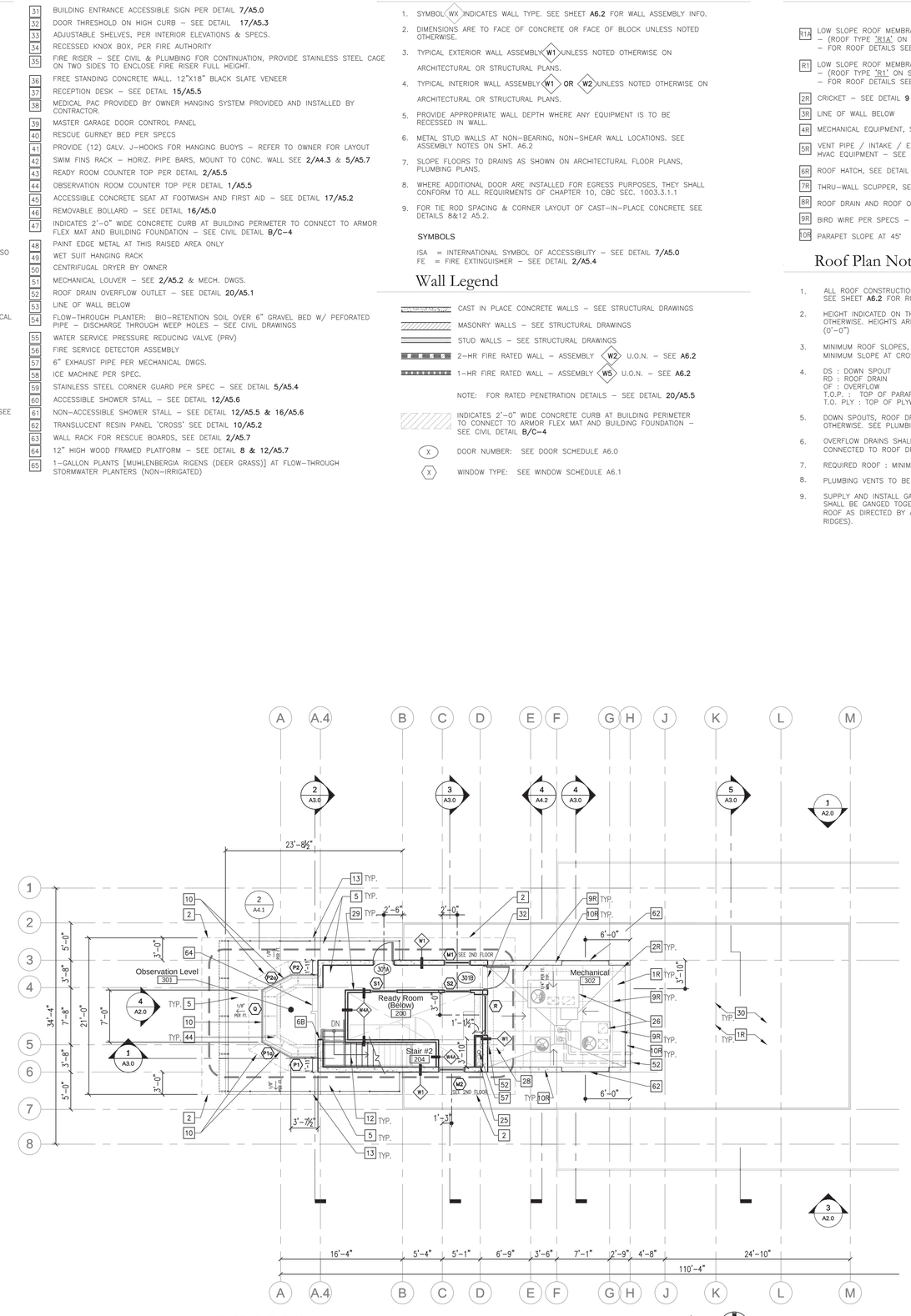

THIRD LEVEL PLAN
1/8" = 1'–0"
F.F. = +32.00' MSL

Dominy + Associates Architects @ domusstudio
2150 West Washington, Suite 303
San Diego, California 92110
Tel 619.692.9393
Fax 619.692.9394
domusstudio.com

SPEC. NO. 8147

LICENSED ARCHITECT WAYNE POLITO No. C12113 REN 9.30.15 STATE OF CALIFORNIA

PLANS FOR THE CONSTRUCTION OF

South Mission Beach Lifeguard Station

Third Level + Roof Plan — A1.3

CITY OF SAN DIEGO, CALIFORNIA
ENGINEERING & CAPITAL PROJECTS
ARCHITECTURAL ENGINEERING & CONTRACTS DIVISION
SHEET 24 OF 94 SHEETS

APPROVED: _____ FOR CITY ENGINEER
10/13/2014 DATE

WBS S-00791

SUBMITTED BY: JIHAD SLEIMAN, PROJECT MANAGER

DESCRIPTION	BY	APPROVED	DATE	FILMED
ORIGINAL	WH/TT			

YOUSIF BENYAMIN, PROJECT ENGINEER
218–1693
CCS27 COORDINATES
1858–6253
CCS83 COORDINATES

CONTRACTOR _____ DATE STARTED _____
INSPECTOR _____ DATE COMPLETED _____

32849–24–D

A-6

South Mission Beach Lifeguard Station
San Diego, California

© COPYRIGHT October 13, 2014 at 8:16AM
Proprietary design: These drawings and design are protected by common law copyright. All patentable material contained herein and originating with Dominy + Associates Architects @ domusstudio LLP shall be the property of Dominy + Associates Architects @ domusstudio LLP

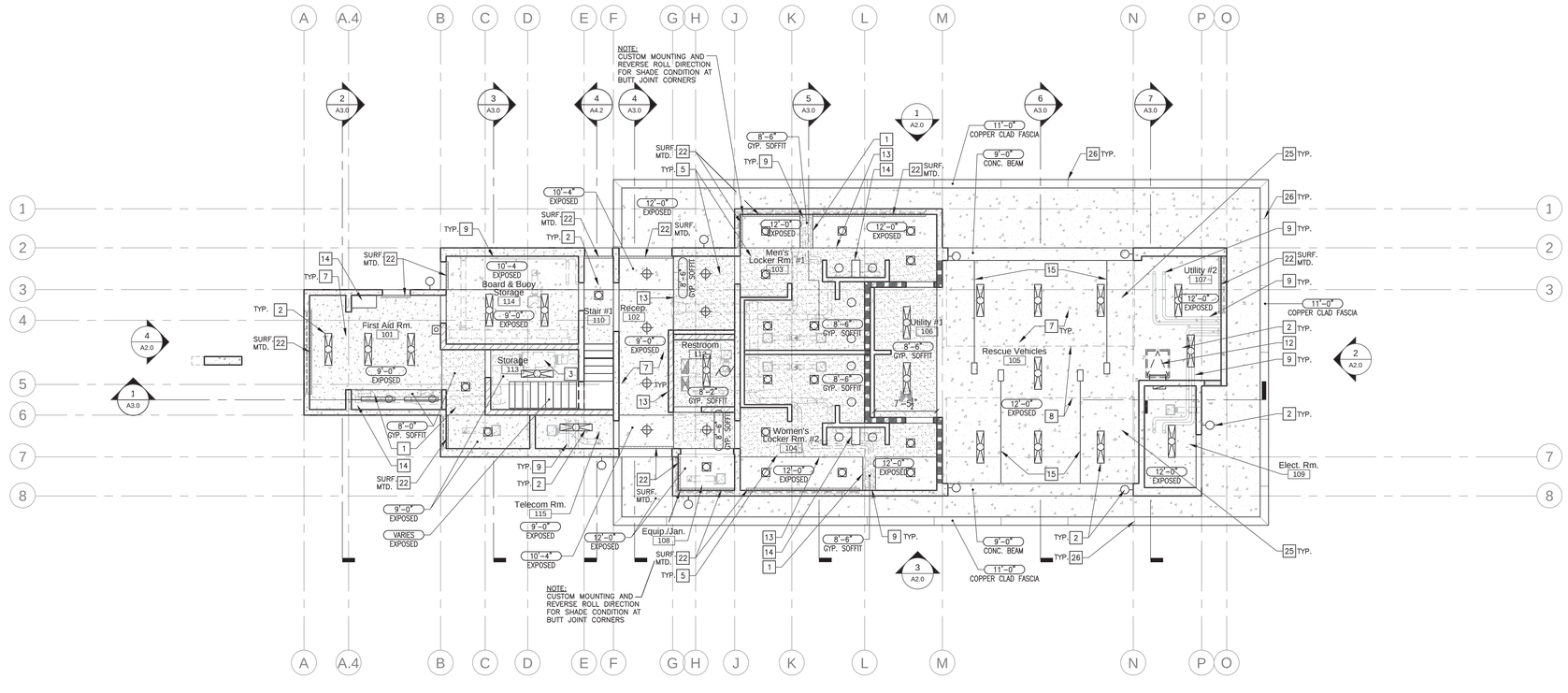

FIRST FLOOR REFLECTED CEILING PLAN
1/8" = 1'-0"

Reflected Ceiling Plan Keyed Notes

1. GYP. DROP SOFFIT FOR MECH. DUCT PER MECHANICAL DRAWINGS, TYP. – SEE **17/A5.5**
2. LIGHTS PER ELECTRICAL DRAWINGS, TYP.
3. MECHANICAL UNIT OR SHAFT PER MECHANICAL DRAWINGS
4. COLUMN PER STRUCTURAL DWG'S.
5. MOISTURE & MOLD RESISTANT GYPSUM BOARD CEILING
5A. CEMENT FIBER BOARD SOFFIT AT EXTERIOR
6. GYPSUM BOARD CONTROL JOINT, U.S.G. No. 093
7. CONCRETE SLAB PER STRUCTURAL DWG'S
8. LINE OF OVERHEAD METAL DOOR & TRACK.
9. ROOF DRAIN PIPING. SEE PLUMBING AND CIVIL DRAWINGS
10. SURFACE MOUNTED SPEAKER SYSTEM PER SPECIFICATIONS – SEE ELECTRICAL DWG'S
11. BINOCULAR CEILING MOUNT – SEE DETAIL **8/A5.4**
12. ROOF ACCESS LADDER. SEE DETAIL **13/A5.1**
13. 1/2" ALUM. "I" REVEAL REGLET BY 'FRYREGLET': TDM-625-75, WHERE GYPSUM BOARD MEETS CONCRETE WALL/CEILING, – DO NOT PAINT – SEE DETAIL **20/A5.2**
14. BUILT-IN CABINETRY. SEE INTERIOR ELEVATIONS
15. GARAGE DOOR OPERATOR AND TROLLEY
16. GLAZING PER WINDOW PLAN AND WINDOW SCHEDULE
17. NOT USED
18. RETURN AIR GRILLE – SEE MECH. DWGS.
19. SUSP. ACOUSTICAL CEILING TILE – PER SPECS, SEE DETAILS **13, 15, 18/A5.4**
20. EXPOSED MECHANICAL DUCT – PAINT MATTE BLACK
21. SCREEN WALLS
22. WINDOW ROLLER SHADE PER SPECS (RECESSED U.N.O.) – SEE DETAIL **19/A5.4**
23. 1½" ACOUSTICAL PANELS PER SPECS.
24. GYP. BD. TO WRAP STRUCTURAL BEAM – SEE DETAIL **20/A5.4**
25. COORDINATE SPRINKLER PIPING & HEADS WITH GARAGE DOORS, LIGHTS, AND OPERATOR TROLLEY LAYOUT
26. COPPER SEAM – ALIGN WITH VERTICAL FASCIA SEAM

Reflected Ceiling Legend

- EXPOSED STRUCTURE
- GYPSUM BOARD – SEE FINISH SCHEDULE FOR TYPE
- CEMENT BOARD SOFFIT – SEE FINISH SCHEDULE FOR TYPE
- ACOUSTICAL PANEL – SEE FINISH SCHEDULE
- SUSPENDED ACOUSTICAL CEILING TILE – SEE DETAILS 13-17/A5.4
- 30" X 36" CLR. OPENING ROOF ACCESS HATCH PER SPECIFICATIONS – PAINT TO MATCH ADJACENT CEILING COLOR
- SLOPED CEILING – ARROW POINTS DOWN SLOPE
- EXIT SIGN
- LIGHTS PER ELECTRICAL DRAWINGS

Reflected Ceiling Plan Notes

1. ALL CEILINGS EXPOSED STRUCTURE U.N.O.
2. PROVIDE 2X FRAMING @16" O.C. MIN. @ GYP. BD. CEILINGS – TYP.
3. WALLS ARE FULL HEIGHT TO ROOF DECK TYP.
4. SEE ELECTRICAL PLANS AND SPECIFICATIONS FOR FIXTURE TYPES & RECESSED LOCATIONS.
5. CONTRACTOR TO COORDINATE LOCATION OF FIXTURES, DUCTS, GRILLES, ETC. & NOTIFY ARCHITECT SHOULD ANY CONFLICTS ARISE.
6. FOR GRILLE, FAN, AND DUCT SIZES, SEE MECHANICAL DRAWINGS AND SPECIFICATIONS. PAINT TO MATCH ADJACENT PAINTED SURFACE, U.N.O. SEE FINISH SCHEDULE AND SPECIFICATIONS FOR ADDITIONAL INFO.
7. AT EXPOSED LOCATIONS, ALL DUCTS, CONDENSER LINES, FIRE LINES, ELECTRICAL LINES, ETC. SHALL BE RUN IN AN ORDERLY AND ORTHOGONAL MANNER. ALL RUNS SHALL BE PERPENDICULAR OR PARALLEL TO FRAMING. THERE SHALL BE NO DIAGONAL RUNS U.N.O.
8. CEILING ELEVATIONS NOTED ARE FROM FINISH FLOOR ELEVATION U.N.O.
9. SPRINKLER HEAD LOCATIONS SHALL BE PLACED IN A MANNER THAT COMPLIMENTS THE DESIGN. COORDINATE AND REVIEW LAYOUT WITH ARCHITECT PRIOR TO INSTALLATION.
10. PAINT ALL EXPOSED GRILLES, DUCTS, CONDUIT. COLOR AS SELECTED BY ARCHITECT.

South Mission Beach Lifeguard Station
San Diego, California

A-7

Dominy + Associates Architects @ domusstudio
2150 West Washington, Suite 303
San Diego, California 92110
Tel 619.692.9393
Fax 619.692.9394
domusstudio.com

SPEC. NO. 8147

LICENSED ARCHITECT JOANNE POLLARD No. C12113 REN. 9.30.15 STATE OF CALIFORNIA

PLANS FOR THE CONSTRUCTION OF
South Mission Beach Lifeguard Station

First Floor Reflected Ceiling Plan | A1.4

CITY OF SAN DIEGO, CALIFORNIA
ENGINEERING & CAPITAL PROJECTS
ARCHITECTURAL ENGINEERING & CONTRACTS DIVISION
SHEET 25 OF 94 SHEETS

WBS S-00791

APPROVED: FOR CITY ENGINEER — DATE 10/13/2014

SUBMITTED BY: JIHAD SLEIMAN, PROJECT MANAGER

DESCRIPTION	BY	APPROVED	DATE	FILMED
ORIGINAL	WH/TT			

YOUSIF BENYAMIN, PROJECT ENGINEER
218-1693
CCS27 COORDINATES
1858-6253
CCS83 COORDINATES

CONTRACTOR _____ DATE STARTED _____
INSPECTOR _____ DATE COMPLETED _____

32849-25-D

Proprietary design: These drawings and design are protected by common law copyright. All patentable material contained herein and originating with Dominy + Associates Architects @ domusstudio LLP shall be the property of Dominy + Associates Architects @ domusstudio LLP

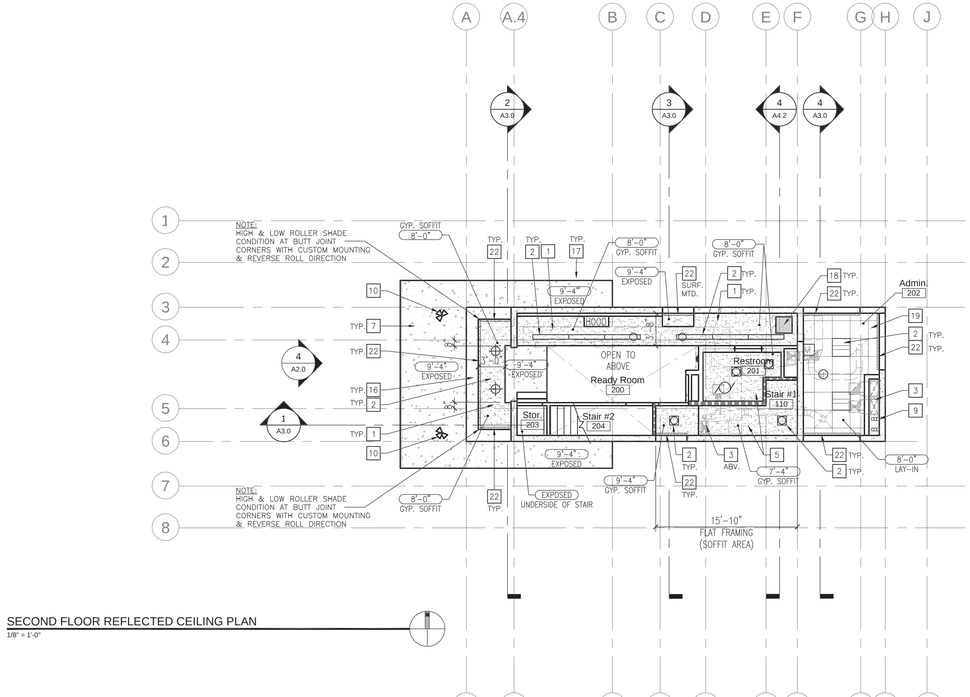

SECOND FLOOR REFLECTED CEILING PLAN

1/8" = 1'-0"

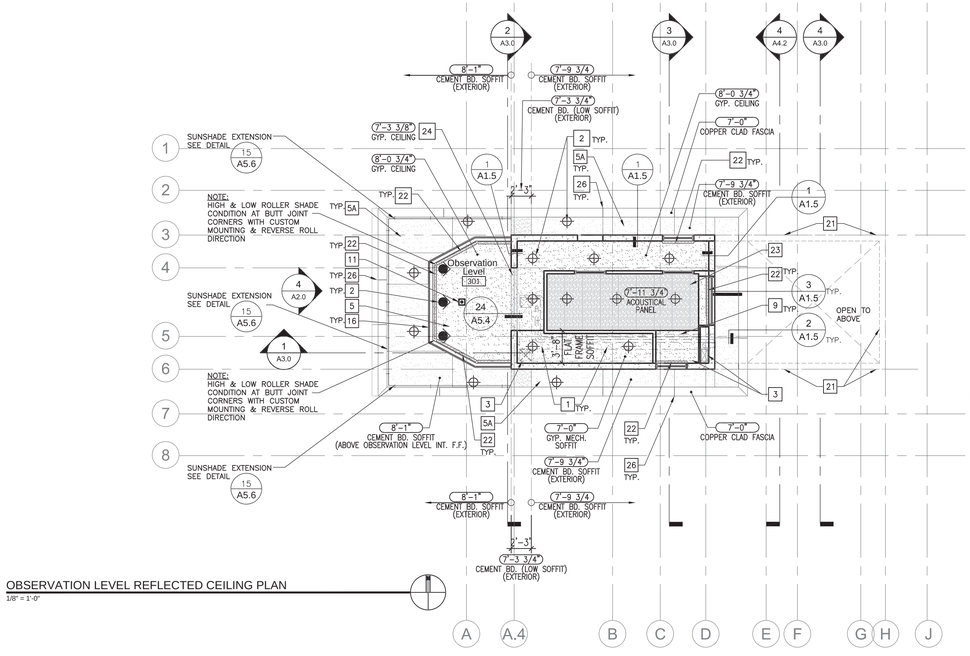

OBSERVATION LEVEL REFLECTED CEILING PLAN

1/8" = 1'-0"

Reflected Ceiling Plan Keyed Notes

1. GYP. DROP SOFFIT FOR MECH. DUCT PER MECHANICAL DRAWINGS, TYP. – SEE **17/A5.5**
2. LIGHTS PER ELECTRICAL DRAWINGS, TYP.
3. MECHANICAL UNIT OR SHAFT PER MECHANICAL DRAWINGS
4. COLUMN PER STRUCTURAL DWG'S.
5. MOISTURE & MOLD RESISTANT GYPSUM BOARD CEILING
5A. CEMENT FIBER BOARD SOFFIT AT EXTERIOR
6. GYPSUM BOARD CONTROL JOINT, U.S.G. No. 093
7. CONCRETE SLAB PER STRUCTURAL DWG'S
8. LINE OF OVERHEAD METAL DOOR & TRACK.
9. ROOF DRAIN PIPING. SEE PLUMBING AND CIVIL DRAWINGS
10. SURFACE MOUNTED SPEAKER SYSTEM PER SPECIFICATIONS – SEE ELECTRICAL DWG'S
11. BINOCULAR CEILING MOUNT – SEE DETAIL **8/A5.4**
12. ROOF ACCESS LADDER. SEE DETAIL **13/A5.1**
13. 1/2" ALUM. "I" REVEAL REGLET BY 'FRYREGLET': TDM–625–75, WHERE GYPSUM BOARD MEETS CONCRETE WALL/CEILING, – DO NOT PAINT – SEE DETAIL **20/A5.2**
14. BUILT–IN CABINETRY. SEE INTERIOR ELEVATIONS
15. GARAGE DOOR OPERATOR AND TROLLEY
16. GLAZING PER WINDOW PLAN AND WINDOW SCHEDULE
17. NOT USED
18. RETURN AIR GRILLE – SEE MECH. DWGS.
19. SUSP. ACOUSTICAL CEILING TILE – PER SPECS, SEE DETAILS **13, 15, 18/A5.4**
20. EXPOSED MECHANICAL DUCT – PAINT MATTE BLACK
21. SCREEN WALLS
22. WINDOW ROLLER SHADE PER SPECS (RECESSED U.N.O.) – SEE DETAIL **19/A5.4**
23. 1½" ACOUSTICAL PANELS PER SPECS.
24. GYP. BD. TO WRAP STRUCTURAL BEAM – SEE DETAIL **20/A5.4**
25. COORDINATE SPRINKLER PIPING & HEADS WITH GARAGE DOORS, LIGHTS, AND OPERATOR TROLLEY LAYOUT
26. COPPER SEAM – ALIGN WITH VERTICAL FASCIA SEAM

Reflected Ceiling Legend

- EXPOSED STRUCTURE
- GYPSUM BOARD – SEE FINISH SCHEDULE FOR TYPE
- CEMENT BOARD SOFFIT – SEE FINISH SCHEDULE FOR TYPE
- ACOUSTICAL PANEL – SEE FINISH SCHEDULE
- SUSPENDED ACOUSTICAL CEILING TILE – SEE DETAILS 13–17/A5.4
- 30" X 36" CLR. OPENING ROOF ACCESS HATCH PER SPECIFICATIONS – PAINT TO MATCH ADJACENT CEILING COLOR
- SLOPED CEILING – ARROW POINTS DOWN SLOPE
- EXIT SIGN
- LIGHTS PER ELECTRICAL DRAWINGS

Reflected Ceiling Plan Notes

1. ALL CEILINGS EXPOSED STRUCTURE U.N.O.
2. PROVIDE 2X FRAMING @16" O.C. MIN. @ GYP. BD. CEILINGS – TYP.
3. WALLS ARE FULL HEIGHT TO ROOF DECK TYP.
4. SEE ELECTRICAL PLANS AND SPECIFICATIONS FOR FIXTURE TYPES & RECESSED LOCATIONS.
5. CONTRACTOR TO COORDINATE LOCATION OF FIXTURES, DUCTS, GRILLES, ETC. & NOTIFY ARCHITECT SHOULD ANY CONFLICTS ARISE.
6. FOR GRILLE, FAN, AND DUCT SIZES, SEE MECHANICAL DRAWINGS AND SPECIFICATIONS. PAINT TO MATCH ADJACENT PAINTED SURFACE, U.N.O. SEE FINISH SCHEDULE AND SPECIFICATIONS FOR ADDITIONAL INFO.
7. AT EXPOSED LOCATIONS, ALL DUCTS, CONDENSER LINES, FIRE LINES, ELECTRICAL LINES, ETC. SHALL BE RUN IN AN ORDERLY AND ORTHOGONAL MANNER. ALL RUNS SHALL BE PERPENDICULAR OR PARALLEL TO FRAMING. THERE SHALL BE NO DIAGONAL RUNS U.N.O.
8. CEILING ELEVATIONS NOTED ARE FROM FINISH FLOOR ELEVATION U.N.O.
9. SPRINKLER HEAD LOCATIONS SHALL BE PLACED IN A MANNER THAT COMPLIMENTS THE DESIGN. COORDINATE AND REVIEW LAYOUT WITH ARCHITECT PRIOR TO INSTALLATION.
10. PAINT ALL EXPOSED GRILLES, DUCTS, CONDUIT. COLOR AS SELECTED BY ARCHITECT.

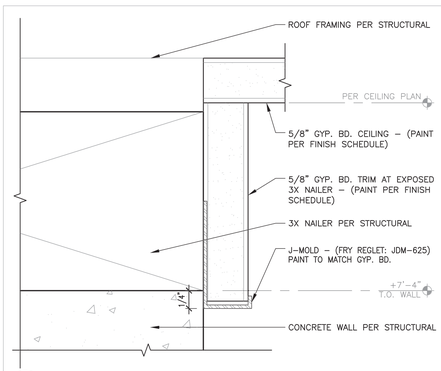

1 Gyp. Bd. Trim at 3rd Level Hallway

1" = 1"

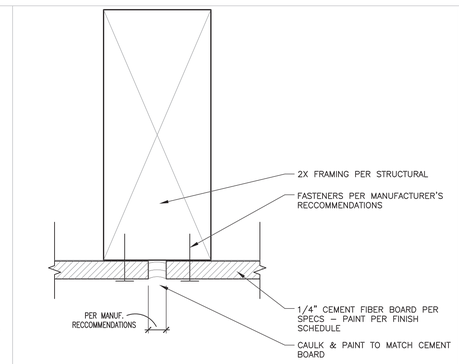

2 Cement Fiber Board Soffit Panel Joint

1" = 1"

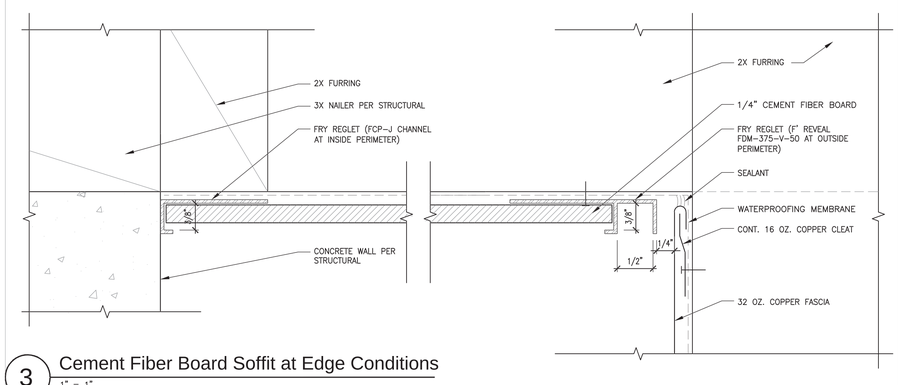

3 Cement Fiber Board Soffit at Edge Conditions

1" = 1"

© COPYRIGHT October 13, 2014 at 8:16AM

South Mission Beach Lifeguard Station
San Diego, California

A-8

Dominy + Associates Architects @ domusstudio
2150 West Washington, Suite 303
San Diego, California 92110
Tel 619.692.9393
Fax 619.692.9394
domusstudio.com

SPEC. NO. 8147

LICENSED ARCHITECT WAYNE POLTON No. C12113 REN 9.30.15 STATE OF CALIFORNIA

PLANS FOR THE CONSTRUCTION OF

South Mission Beach Lifeguard Station

Second + Third RCP's — A1.5

CITY OF SAN DIEGO, CALIFORNIA
ENGINEERING & CAPITAL PROJECTS
ARCHITECTURAL ENGINEERING & CONTRACTS DIVISION
SHEET 26 OF 94 SHEETS

WBS S-00791

APPROVED: FOR CITY ENGINEER — DATE 10/13/2014

SUBMITTED BY: JIHAD SLEIMAN, PROJECT MANAGER

DESCRIPTION	BY	APPROVED	DATE	FILMED
ORIGINAL	WH/TT			

YOUSIF BENYAMIN, PROJECT ENGINEER
218–1693
CCS27 COORDINATES
1858–6253
CCS83 COORDINATES

CONTRACTOR _____ DATE STARTED _____
INSPECTOR _____ DATE COMPLETED _____

32849–26–D

Proprietary design: These drawings and design are protected by common law copyright. All patentable material contained herein and originating with Dominy + Associates Architects @ domusstudio LLP shall be the property of Dominy + Associates Architects @ domusstudio LLP

© COPYRIGHT October 13, 2014 at 8:00AM

South Mission Beach Lifeguard Station
San Diego, California

Elevation / Section Keyed Notes

1. CAST IN PLACE CONCRETE – SMOOTH TEXTURED FINISH PER SPECIFICATIONS (SEAL ALL EXPOSED CONCRETE & CMU) – SEE DETAIL **8 & 11/A5.2** FOR FORM TIE
2. CMU, FINISH PER SPEC.
3. CAST IN PLACE ROOF / FLOOR – SMOOTH FINISH (NON–SLIP FINISH AT FLOORS)
4. GRAFFITI COATING TYPICAL
5. ROOF DRAIN & OVERFLOW PER PLAN
6. COPPER FASCIA – SEE DETAIL **2 & 5 /A5.1**
7. WINDOW / DOOR SYSTEM FRAMES PER SCHEDULE & SPEC.
7A. ALUMINUM FRAME WINDOW SYSTEM, SEE WINDOW SCHED.
7B. SINGLE GLAZED WINDOWS, BUTT JOINT
8. BUILDING ADDRESS NUMBER PER SPECS. AND **9/A5.4 SIM.**
9. EXTERIOR GUARDRAIL. SEE DETAIL **6, 9, 13/A5.2**
10. OVERHEAD DOOR. PER DOOR SCHED.
11. LIGHT FIXTURE PER ELECTRICAL DWG'S.
12. BUILDING SIGNAGE – SEE DETAIL **9/A5.4**
13. FINISHED GRADE
14. EXPOSED CONCRETE OR CMU BLOCK– SEALED PER SPEC.
15. GYP. BOARD SOFFIT / CEILING, SEE SCHEDULE.
16. HVAC EQUIPMENT / DUCTS. PER MECHANICAL DWG'S.
17. DOOR LOUVER – SEE MECH. DWGS.
18. BATT INSULATION: ROOF = R30 MIN., EXT. WALLS ARE 8" CONCRETE (NO INSULATION)
19. PLYWOOD SHEATHING PER STRUCT. DWG'S.
20. FRAMING PER STRUCT. DWG'S.
21. GYP. BOARD. & FINISH PER SCHEDULE
22. HIGH PERFORMANCE BLANKET INSULATION
23. CONCRETE FOUNDATION / SLAB PER STRUCT. DWG'S.
23A. EROSION CONTROL MAT PER CIVIL
24. CEILING JOISTS – SEE STRUCTURAL
25. MEMBRANE ROOF OVER FIBERGLASS MAT GYPSUM ROOF BOARD, PER SPECS.
26. CABINETRY / COUNTER, SEE INTERIOR ELEVATIONS
27. CONCRETE SPLASH BLOCK – SEE DETAIL **1/A5.2**
28. MECHANICAL LOUVER, PER MECHANICAL DWG'S & **2/A5.2**
29. COPPER ROOF DRAIN/OVERFLOW OUTLET SPOUT. SEE DETAIL **20/A5.1** SIM. SEE PLUMBING FOR TYPE OF DRAIN
30. HOOD EXHAUST PER MECHANICAL DRAWINGS. FLASHING
31. ACCESSIBLE BUILDING ENTRANCE IDENTIFICATION SIGN. SEE DTL. **6/A5.0**
32. FIRE ALARM BELL LOCATION
33. FREE STANDING CONC. WALL
34. DOOR ACCESS KEYPAD MOUNTED AT ACCESSIBLE HEIGHT, 4'–0" A.F.F. – SEE ELECTRICAL DRAWINGS.
35. TAPERED INSULATION, PER ROOF PLAN AND SPECS – ALSO SEE **8/5.1**
36. METAL STAIR W/ CONCRETE TREADS
37. SPEAKER, PER ELECTRICAL
38. LOCKERS PER SPECS.
39. CONCRETE FLATWORK – 5" THICK WITH #3 AT 18" O.C.E.W., TYP. OVER COMPACTED BASE – NATURAL GRAY CONCRETE WITH LIGHT BROOM FINISH, TYP. – SLOPE AWAY FROM BUILDING
40. CONCRETE SLAB OVER SAND BASE OVER STRUCTURAL SLAB – SEE STRUCTRAL DWG'S
41. HOSE BIB BOX PER PLUMBING DWG'S
42. SAND BED FOR PLUMBING PIPES & CONDUITS
43. ROOF ACCESS LADDER AND HATCH – SEE DETAIL **3/A5.1**
44. RESCUE GURNEY BED PER SPECS
45. BINOCULAR CEILING MOUNT – SEE DETAIL **8/A5.4**
46. CEMENT FIBER BOARD SOFFIT
47. TYPICAL CONCRETE CURB PER SEE STRUCTURAL – SEE DETAIL **14/A5.2**
48. 1/2" ALUM. 'T' REVEAL REGLET BY 'FRYREGLET': TDM–TDM–625–75, WHERE GYPSUM BOARD MEETS CONCRETE WALL/CEILING, – DO NOT PAINT – SEE SEE DETAIL 20/A5.2
49. SUSPENDED ACOUSTICAL CEILING TILE – PER SPECS
50. FLOW–THROUGH PLANTER: BIO–RETENTION SOIL OVER 6" GRAVEL BED W/ PEFORATED PIPE – DISCHARGE THROUGH WEEP HOLES – SEE CIVIL DWGS.
51. FIRE RISER – SEE CIVIL & PLUMBING FOR CONTINUATION
52. GARAGE DOOR OPERATOR AND TROLLEY
53. WINDOW ROLLER SHADE PER SPECS (RECESSED U.N.O.) – SEE DETAIL **19/A5.4**
54. BELOW GRADE WATERPROOFING – SEE DETAIL **8/ A5.6**
55. LINE INSIDE OF ALL PLANTER WALLS AND FLOOR WITH WATERPROOFING MEMBRANE PER SPECS – TERMINATE WITH COPPER FLASHING AT TOP, SIMILAR TO DETAIL **8/A5.6**
56. 2x4 WEEP HOLE OPENING FOR BIO–RETENTION PLANTER DRAINAGE
57. 'T' REVEAL – (FRY REGLET FDM–375–V–50 AT OUTSIDE PERIMETER & FCP–J CHANNEL AT INSIDE PERIMETER)
58. 12" HIGH WOOD FRAMED PLATFORM – SEE DETAIL **8 & 12/A5.7**
59. TYPICAL VERTICAL COPPER SEAM – SEE DETAIL **2 & 5/A5.1 AND 10/A5.6**
60. TOP OF PARAPET SHALL BE ANGLED 45° – SEE DETAIL **18/A5.1**
61. CONCRETE PANEL JOINTS – SEE SHEET A2.1

Elevation / Section Notes

1. CONFIRM WITH ARCHITECT LOCATION OF EXPOSED CONDUIT OR SURFACE MOUNTED BOXES, PRIOR TO INSTALLATION.
2. THE HIGHEST POINT OF THE ROOF, EQUIPMENT, OR ANY VENT, PIPE, ANTENNA OR OTHER PROJECTION SHALL NOT EXCEED 30 FEET ABOVE GRADE.
3. **TYPICAL: FOR PANEL LAYOUT, SEE SHEET A2.1**

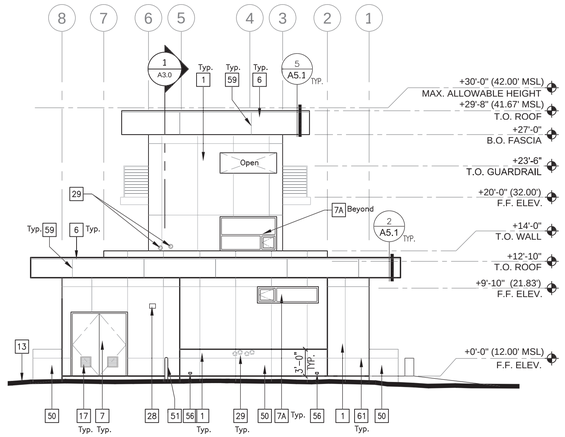

2 EAST ELEVATION
1/8" = 1'-0"

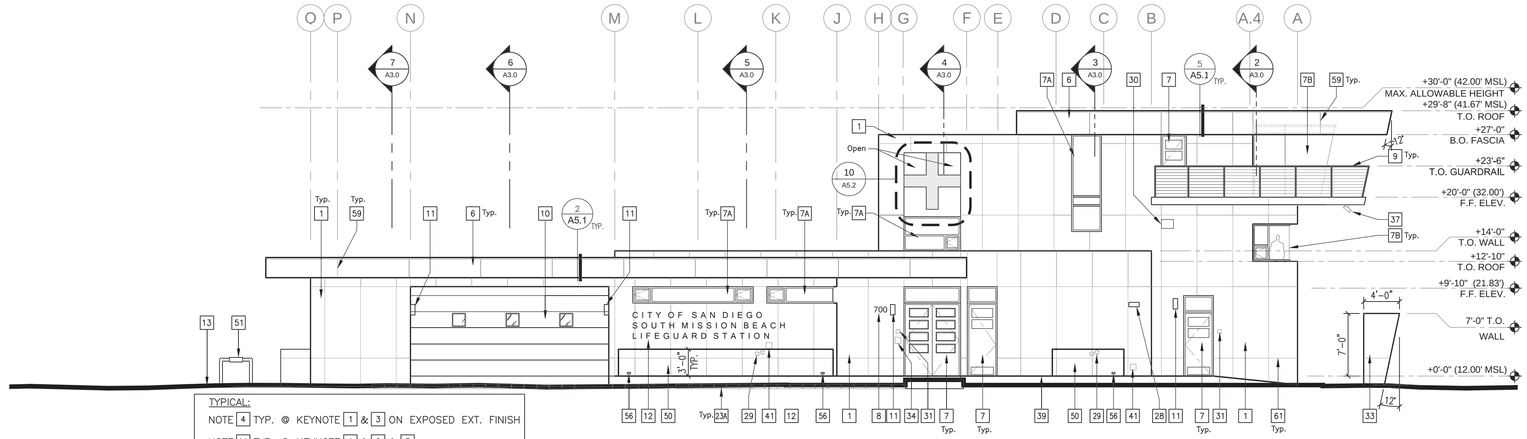

TYPICAL:
NOTE 4 TYP. @ KEYNOTE 1 & 3 ON EXPOSED EXT. FINISH
NOTE 14 TYP. @ KEYNOTE 1 & 2 & 3

1 NORTH ELEVATION
1/8" = 1'-0"

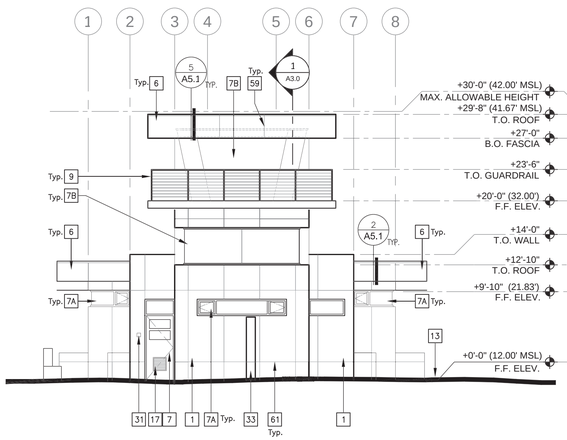

4 WEST ELEVATION
1/8" = 1'-0"

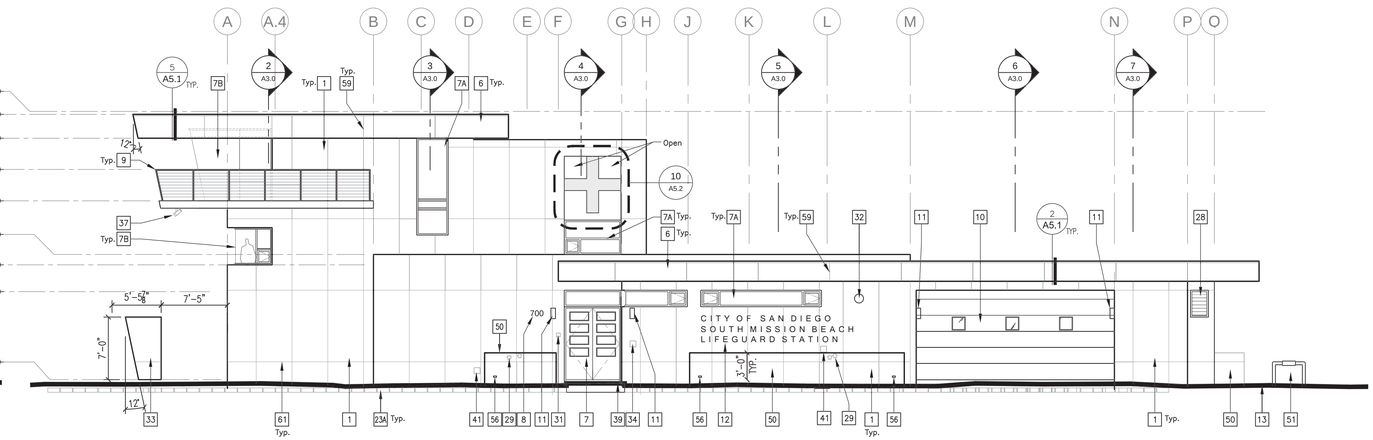

3 SOUTH ELEVATION
1/8" = 1'-0"

A-9

Dominy + Associates Architects @ domusstudio
2150 West Washington, Suite 303
San Diego, California 92110

Tel 619.692.9393
Fax 619.692.9394
domusstudio.com

SPEC. NO. 8147

LICENSED ARCHITECT
WAYNE POLITO
No. C12113
REN 9.30.15
STATE OF CALIFORNIA

PLANS FOR THE CONSTRUCTION OF

South Mission Beach Lifeguard Station

Exterior Elevations — A2.0

CITY OF SAN DIEGO, CALIFORNIA
ENGINEERING & CAPITAL PROJECTS
ARCHITECTURAL ENGINEERING & CONTRACTS DIVISION
SHEET 27 OF 94 SHEETS

APPROVED: _____ FOR CITY ENGINEER
10/13/2014 DATE

WBS S-00791

SUBMITTED BY:
JIHAD SLEIMAN
PROJECT MANAGER

DESCRIPTION	BY	APPROVED	DATE	FILMED
ORIGINAL	WH/TT			

YOUSIF BENYAMIN
PROJECT ENGINEER

218–1693
CCS27 COORDINATES

1858–6253
CCS83 COORDINATES

CONTRACTOR _____ DATE STARTED _____
INSPECTOR _____ DATE COMPLETED _____

32849–27–D

© COPYRIGHT October 13, 2014 at 8:18AM
Proprietary design. These drawings and design are protected by common law copyright. All patentable material contained herein and originating with Dominy + Associates Architects @ domusstudio LLP shall be the property of Dominy + Associates Architects @ domusstudio LLP

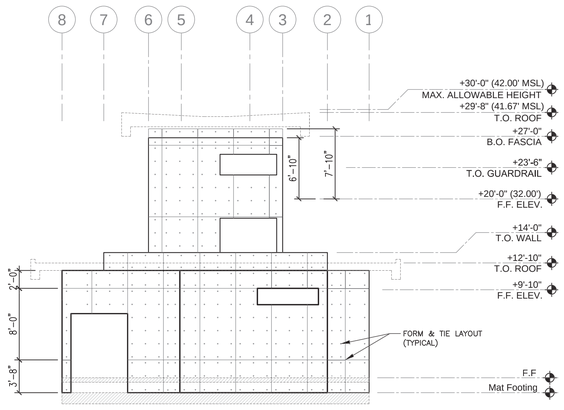

2 EAST ELEVATION
1/8" = 1'-0"

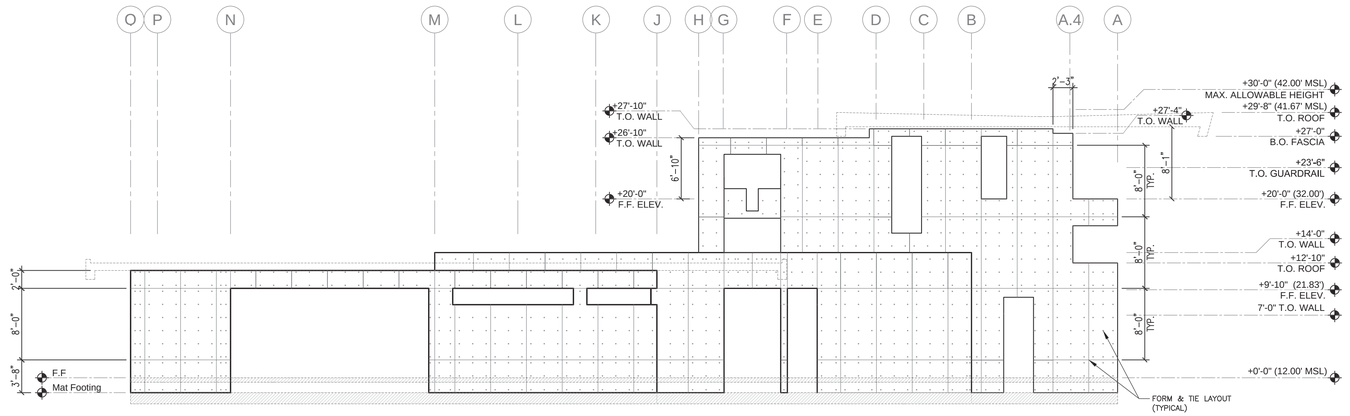

1 NORTH ELEVATION
1/8" = 1'-0"

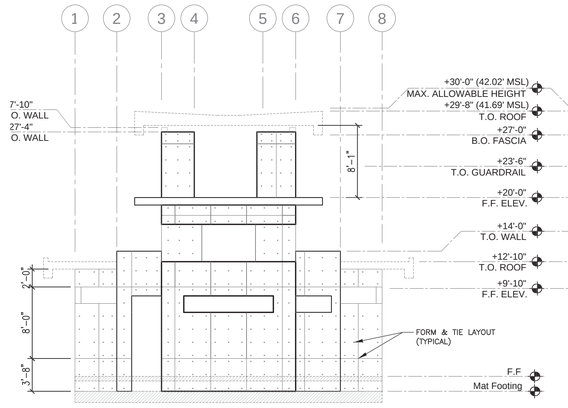

4 WEST ELEVATION
1/8" = 1'-0"

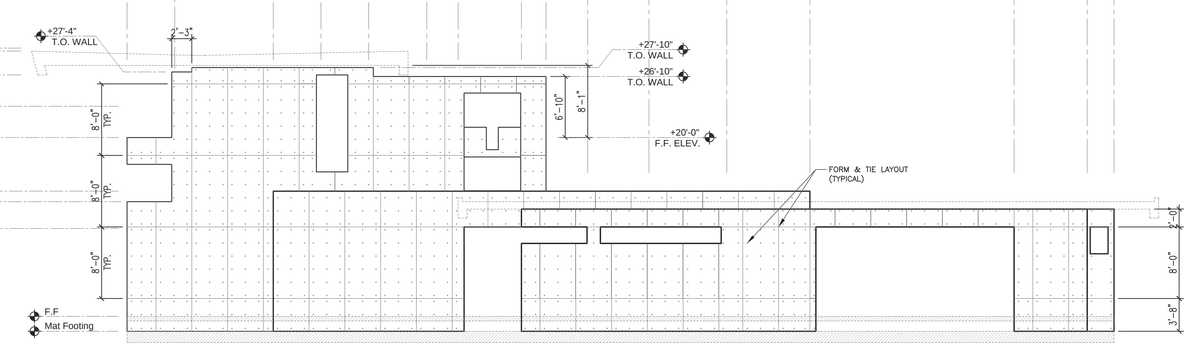

3 SOUTH ELEVATION
1/8" = 1'-0"

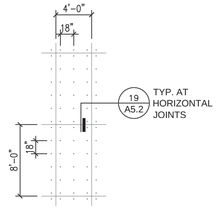

5 TYPICAL PANEL
1/8" = 1'-0"

NOTE:

1. SUBCONTRACTOR TO PROVIDE SHOP DRAWINGS OF PANEL LAYOUT AND TIE LOCATIONS FOR REVEIW BY ARCHITECT, PRIOR TO FORMWORK FABRICATION.

2. FOR TYPICAL DETAILS SEE 8, 11 AND 12 / A5.2

A-10

Dominy + Associates Architects @ domusstudio
2150 West Washington, Suite 303
San Diego, California 92110

Tel 619.692.9393
Fax 619.692.9394
domusstudio.com

SPEC. NO. 8147

LICENSED ARCHITECT
CHRISTINE HOLTAN
No. C12113
REN 9.30.15
STATE OF CALIFORNIA

PLANS FOR THE CONSTRUCTION OF

South Mission Beach Lifeguard Station

Cast-In-Place Panel Layout | A2.1

CITY OF SAN DIEGO, CALIFORNIA
ENGINEERING & CAPITAL PROJECTS
ARCHITECTURAL ENGINEERING & CONTRACTS DIVISION
SHEET 28 OF 94 SHEETS

WBS S-00791

APPROVED: _____ FOR CITY ENGINEER
10/13/2014 DATE

SUBMITTED BY: JIHAD SLEIMAN PROJECT MANAGER

DESCRIPTION	BY	APPROVED	DATE	FILMED
ORIGINAL	WH/TT			

YOUSIF BENYAMIN PROJECT ENGINEER
218-1693
CCS27 COORDINATES
1858-6253
CCS83 COORDINATES

CONTRACTOR _____ DATE STARTED _____
INSPECTOR _____ DATE COMPLETED _____

32849-28-D

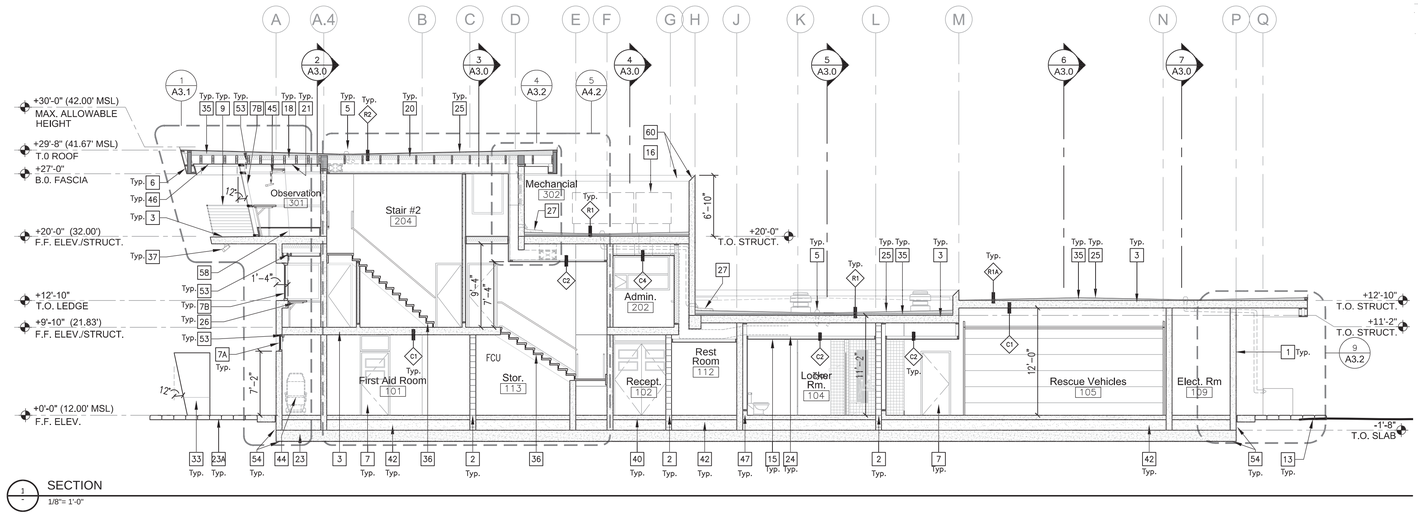

1 SECTION
1/8"= 1'-0"

Elevation / Section Keyed Notes

1. CAST IN PLACE CONCRETE – SMOOTH TEXTURED FINISH PER SPECIFICATIONS (SEAL ALL EXPOSED CONCRETE & CMU) – SEE DETAIL **8 & 11/A5.2** FOR FORM TIE
2. CMU, FINISH PER SPEC.
3. CAST IN PLACE ROOF / FLOOR – SMOOTH FINISH (NON–SLIP FINISH AT FLOORS)
4. GRAFFITI COATING TYPICAL
5. ROOF DRAIN & OVERFLOW PER PLAN
6. COPPER FASCIA – SEE DETAIL **2 & 5 /A5.1**
7. WINDOW / DOOR SYSTEM FRAMES PER SCHEDULE & SPEC.
7A. ALUMINUM FRAME WINDOW SYSTEM, SEE WINDOW SCHED.
7B. SINGLE GLAZED WINDOWS, BUTT JOINT
8. BUILDING ADDRESS NUMBER PER SPECS. AND **9/A5.4 SIM.**
9. EXTERIOR GUARDRAIL. SEE DETAIL **6, 9, 13/A5.2**
10. OVERHEAD DOOR. PER DOOR SCHED.
11. LIGHT FIXTURE PER ELECTRICAL DWG'S.
12. BUILDING SIGNAGE – SEE DETAIL **9/A5.4**
13. FINISHED GRADE
14. EXPOSED CONCRETE OR CMU BLOCK– SEALED PER SPEC.
15. GYP. BOARD SOFFIT / CEILING, SEE SCHEDULE.
16. HVAC EQUIPMENT / DUCTS. PER MECHANICAL DWG'S.
17. DOOR LOUVER – SEE MECH. DWGS.
18. BATT INSULATION: ROOF = R30 MIN., EXT. WALLS ARE 8" CONCRETE (NO INSULATION)
19. PLYWOOD SHEATHING PER STRUCT. DWG'S.
20. FRAMING PER STRUCT. DWG'S.
21. GYP. BOARD. & FINISH PER SCHEDULE
22. HIGH PERFORMANCE BLANKET INSULATION
23. CONCRETE FOUNDATION / SLAB PER STRUCT. DWG'S.
23A. ERROSION CONTROL MAT PER CIVIL
24. CEILING JOISTS – SEE STRUCTURAL
25. MEMBRANE ROOF OVER FIBERGLASS MAT GYPSUM ROOF BOARD, PER SPECS.
26. CABINETRY / COUNTER, SEE INTERIOR ELEVATIONS
27. CONCRETE SPLASH BLOCK – SEE DETAIL **1/A5.2**
28. MECHANICAL LOUVER, PER MECHANICAL DWG'S & **2/A5.2**
29. COPPER ROOF DRAIN/OVERFLOW OUTLET SPOUT. SEE DETAIL **20/A5.1** SIM. SEE PLUMBING FOR TYPE OF DRAIN
30. HOOD EXHAUST PER MECHANICAL DRAWINGS. FLASHING
31. ACCESSIBLE BUILDING ENTRANCE IDENTIFICATION SIGN. SEE DTL. **6/A5.0**
32. FIRE ALARM BELL LOCATION
33. FREE STANDING CONC. WALL
34. DOOR ACCESS KEYPAD MOUNTED AT ACCESSIBLE HEIGHT, 4'–0" A.F.F. – SEE ELECTRICAL DRAWINGS.
35. TAPERED INSULATION, PER ROOF PLAN AND SPECS – ALSO SEE **8/5.1**
36. METAL STAIR W/ CONCRETE TREADS
37. SPEAKER, PER ELECTRICAL
38. LOCKERS PER SPECS.
39. CONCRETE FLATWORK – 5" THICK WITH #3 AT 18" O.C.E.W., TYP. OVER COMPACTED BASE – NATURAL GRAY CONCRETE WITH LIGHT BROOM FINISH, TYP. – SLOPE AWAY FROM BUILDING
40. CONCRETE SLAB OVER SAND BASE OVER STRUCTURAL SLAB – SEE STRUCTRAL DWG'S
41. HOSE BIB BOX PER PLUMBING DWG'S
42. SAND BED FOR PLUMBING PIPE'S & CONDUITS
43. ROOF ACCESS LADDER AND HATCH – SEE DETAIL **3/A5.1**
44. RESCUE GURNEY BED PER SPECS
45. BINOCULAR CEILING MOUNT – SEE DETAIL **8/A5.4**
46. CEMENT FIBER BOARD SOFFIT
47. TYPICAL CONCRETE CURB PER SEE STRUCTURAL – SEE DETAIL **14/A5.2**
48. 1/2" ALUM. 'Y' REVEAL REGLET BY 'FRYREGLET': TDM–TDM–625–75, WHERE GYPSUM BOARD MEETS CONCRETE WALL/CEILING, – DO NOT PAINT – SEE SEE DETAIL 20/A5.2
49. SUSPENDED ACOUSTICAL CEILING TILE – PER SPECS
50. FLOW–THROUGH PLANTER: BIO–RETENTION SOIL OVER 6" GRAVEL BED W/ PEFORATED PIPE – DISCHARGE THROUGH WEEP HOLES – SEE CIVIL DWGS.
51. FIRE RISER – SEE CIVIL & PLUMBING FOR CONTINUATION
52. GARAGE DOOR OPERATOR AND TROLLEY
53. WINDOW ROLLER SHADE PER SPECS (RECESSED U.N.O.) – SEE DETAIL **19/A5.4**
54. BELOW GRADE WATERPROOFING – SEE DETAIL **8/ A5.6**
55. LINE INSIDE OF ALL PLANTER WALLS AND FLOOR WITH WATERPROOFING MEMBRANE PER SPECS – TERMINATE WITH COPPER FLASHING AT TOP, SIMILAR TO DETAIL **8/A5.6**
56. 2x4 WEEP HOLE OPENING FOR BIO–RETENTION PLANTER DRAINAGE
57. 'F' REVEAL – (FRY REGLET FDM–375–V–50 AT OUTSIDE PERIMETER & FCP–J CHANNEL AT INSIDE PERIMETER)
58. 12" HIGH WOOD FRAMED PLATFORM – SEE DETAIL **8 & 12/A5.7**
59. TYPICAL VERTICAL COPPER SEAM – SEE DETAIL **2 & 5/A5.1 AND 10/A5.6**
60. TOP OF PARAPET SHALL BE ANGLED 45° – SEE DETAIL **18/A5.1**
61. CONCRETE PANEL JOINTS – SEE SHEET A2.1

Elevation / Section Notes

1. CONFIRM WITH ARCHITECT LOCATION OF EXPOSED CONDUIT OR SURFACE MOUNTED BOXES, PRIOR TO INSTALLATION.
2. THE HIGHEST POINT OF THE ROOF, EQUIPMENT, OR ANY VENT, PIPE, ANTENNA OR OTHER PROJECTION SHALL NOT EXCEED 30 FEET ABOVE GRADE.
3. **TYPICAL: FOR PANEL LAYOUT, SEE SHEET A2.1**

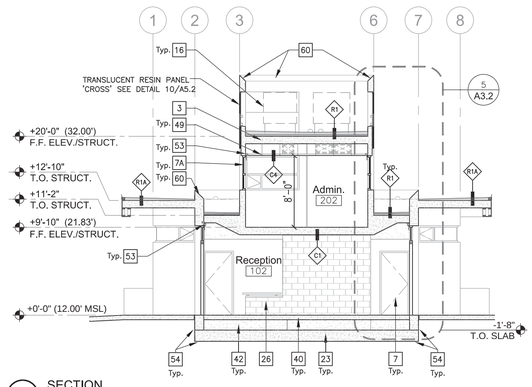

4 SECTION
1/8"= 1'-0"

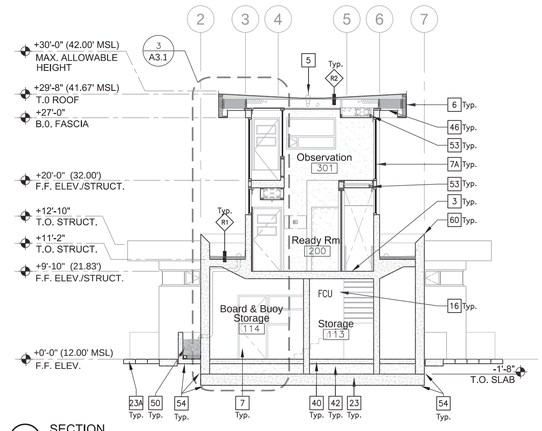

3 SECTION
1/8"= 1'-0"

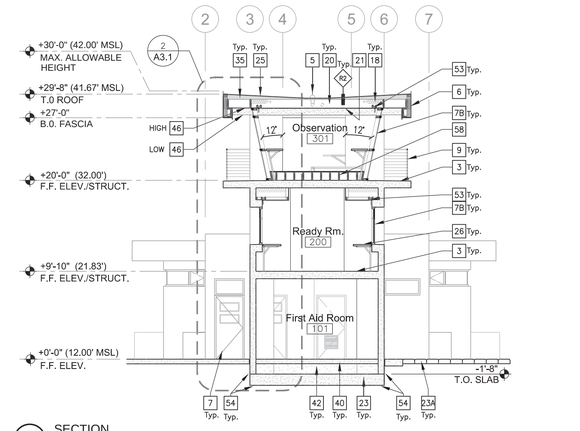

2 SECTION
1/8"= 1'-0"

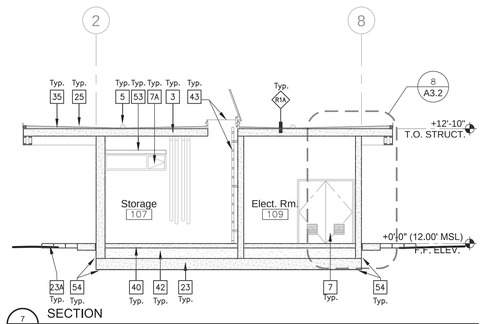

7 SECTION
1/8"= 1'-0"

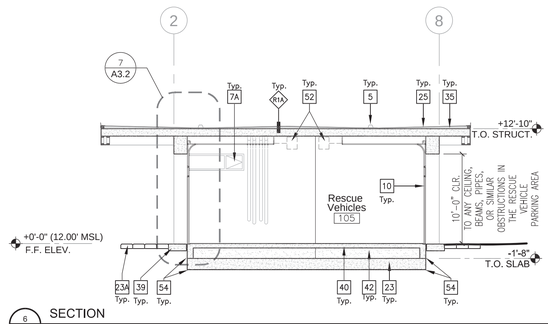

6 SECTION
1/8"= 1'-0"

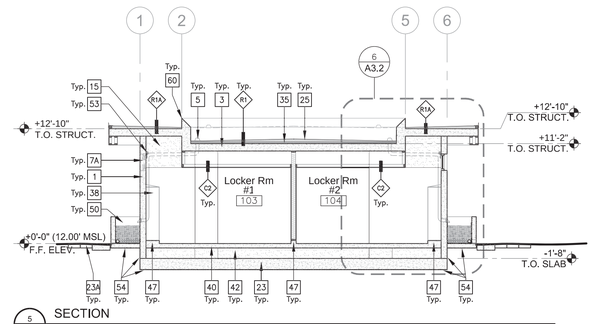

5 SECTION
1/8"= 1'-0"

A-11

Dominy + Associates Architects © domusstudio
2150 West Washington, Suite 303
San Diego, California 92110
Tel 619.692.9393
Fax 619.692.9394
domusstudio.com

SPEC. NO. 8147

LICENSED ARCHITECT — JOHN POLLEY — No. C12113 — REN 9.30.15 — STATE OF CALIFORNIA

PLANS FOR THE CONSTRUCTION OF

South Mission Beach Lifeguard Station

Building Sections — A3.0

CITY OF SAN DIEGO, CALIFORNIA
ENGINEERING & CAPITAL PROJECTS
ARCHITECTURAL ENGINEERING & CONTRACTS DIVISION
SHEET 29 OF 94 SHEETS

APPROVED: _____ FOR CITY ENGINEER — DATE 10/13/2014

DESCRIPTION	BY	APPROVED	DATE	FILMED
ORIGINAL	WH/TT			

CONTRACTOR _____ DATE STARTED _____
INSPECTOR _____ DATE COMPLETED _____

WBS S-00791

SUBMITTED BY:
JIHAD SLEIMAN
PROJECT MANAGER

YOUSIF BENYAMIN
PROJECT ENGINEER

218–1693
CCS27 COORDINATES
1858–6253
CCS83 COORDINATES

32849–29–D

South Mission Beach Lifeguard Station
San Diego, California

Proprietary design. These drawings and design are protected by common law copyright. All patentable material contained herein and originating with Dominy + Associates Architects @ domusstudio LLP shall be the property of Dominy + Associates Architects @ domusstudio LLP
© COPYRIGHT October 13, 2014 at 8:01 AM

© COPYRIGHT October 13, 2014 at 8:03AM
Proprietary design. These drawings and design are protected by common law copyright. All patentable material contained herein and originating with Dominy + Associates Architects @ domusstudio LLP shall be the property of Dominy + Associates Architects @ domusstudio LLP

South Mission Beach Lifeguard Station

San Diego, California

Building Envelope Insulation

ROOF INSULATION:

FIRST LEVEL: (ABOVE LOCKER ROOMS)
[5–LAYERS (2.5") OF HIGH PERFORMANCE BUILDING INSULATION BLANKET (R24) + 1/2" TAPERED RIGID INSULATION (R6) = R30 TOTAL

SECOND LEVEL: (UNDER MECHANICAL)
[5–LAYERS (2.5") OF HIGH PERFORMANCE BUILDING INSULATION BLANKET (R24) + 1/2" TAPERED RIGID INSULATION (R6) = R30 TOTAL

OBSERVATION LEVEL: (UPPER ROOF)
8" BATT (R25) + 1/2" TAPERED RIGID INSULATION (R6) = R31 TOTAL

WALL INSULATION: 3 5/8" BATT INSULATION (R13)

Elevation / Section Keyed Notes

1. CAST IN PLACE CONCRETE – SMOOTH TEXTURED FINISH PER SPECIFICATIONS (SEAL ALL EXPOSED CONCRETE & CMU) – SEE DETAIL **8 & 11/A5.2** FOR FORM TIE
2. CMU, FINISH PER SPEC.
3. CAST IN PLACE ROOF / FLOOR – SMOOTH FINISH (NON–SLIP FINISH AT FLOORS)
4. GRAFFITI COATING TYPICAL
5. ROOF DRAIN & OVERFLOW PER PLAN
6. COPPER FASCIA – SEE DETAIL **2 & 5 /A5.1**
7. WINDOW / DOOR SYSTEM FRAMES PER SCHEDULE & SPEC.

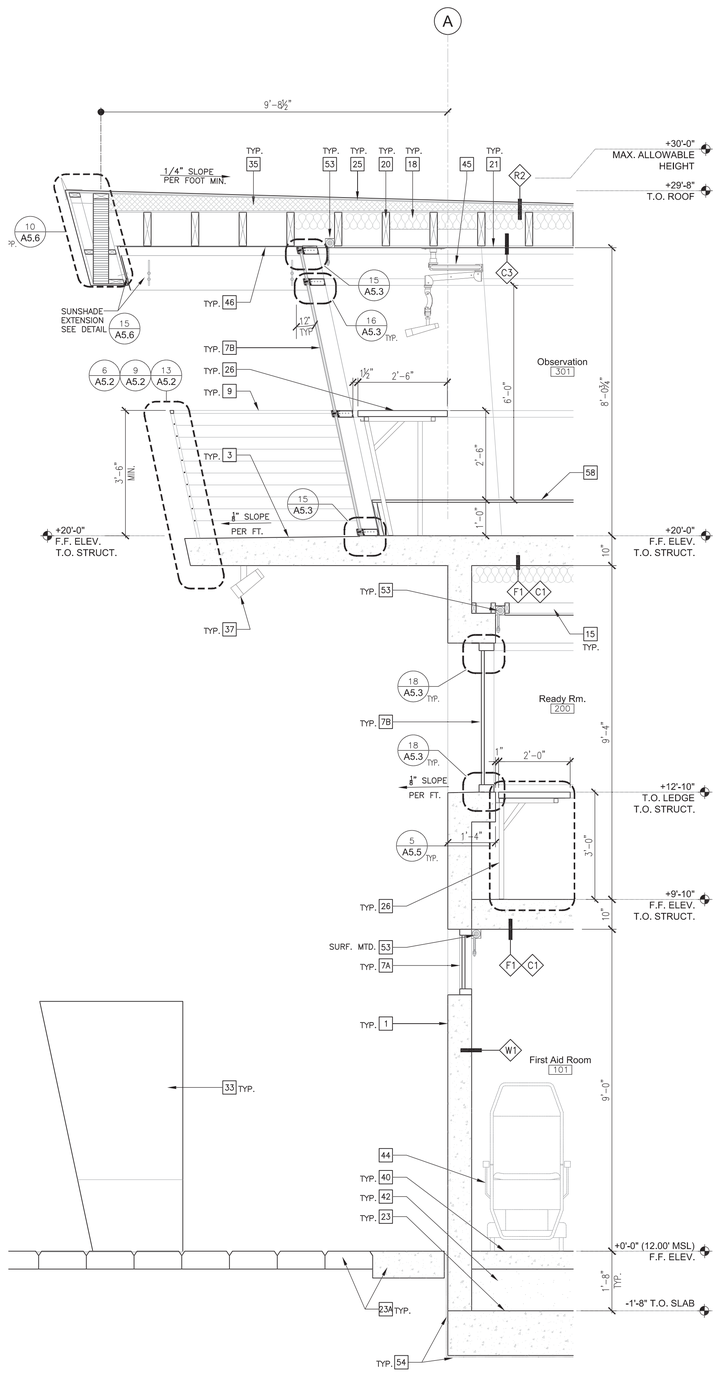

1 WALL SECTION
1/2"= 1'-0"

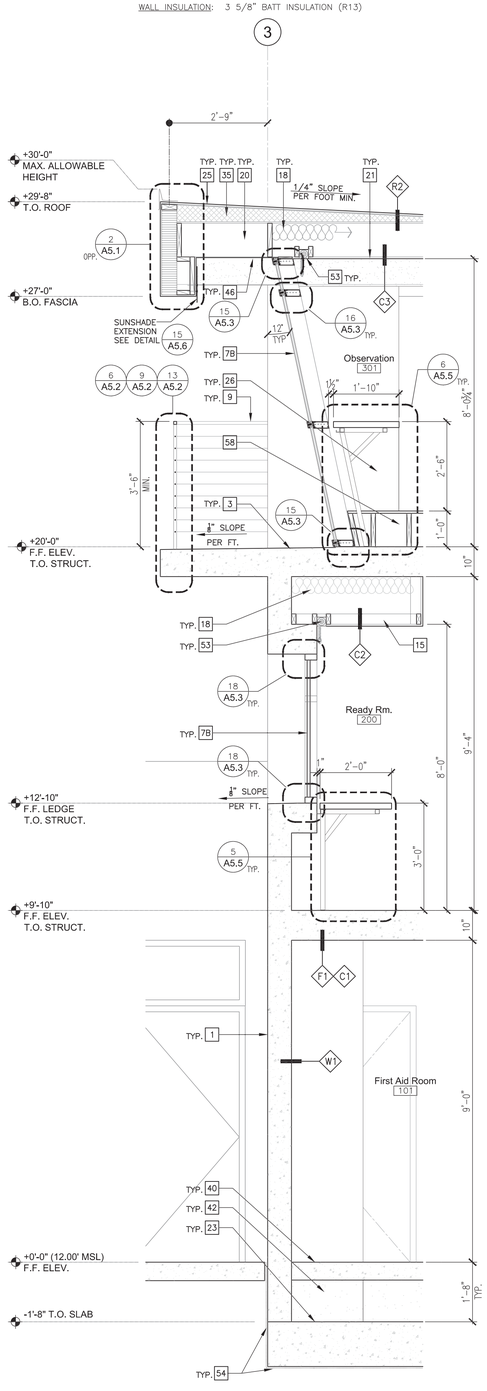

2 WALL SECTION
1/2"= 1'-0"

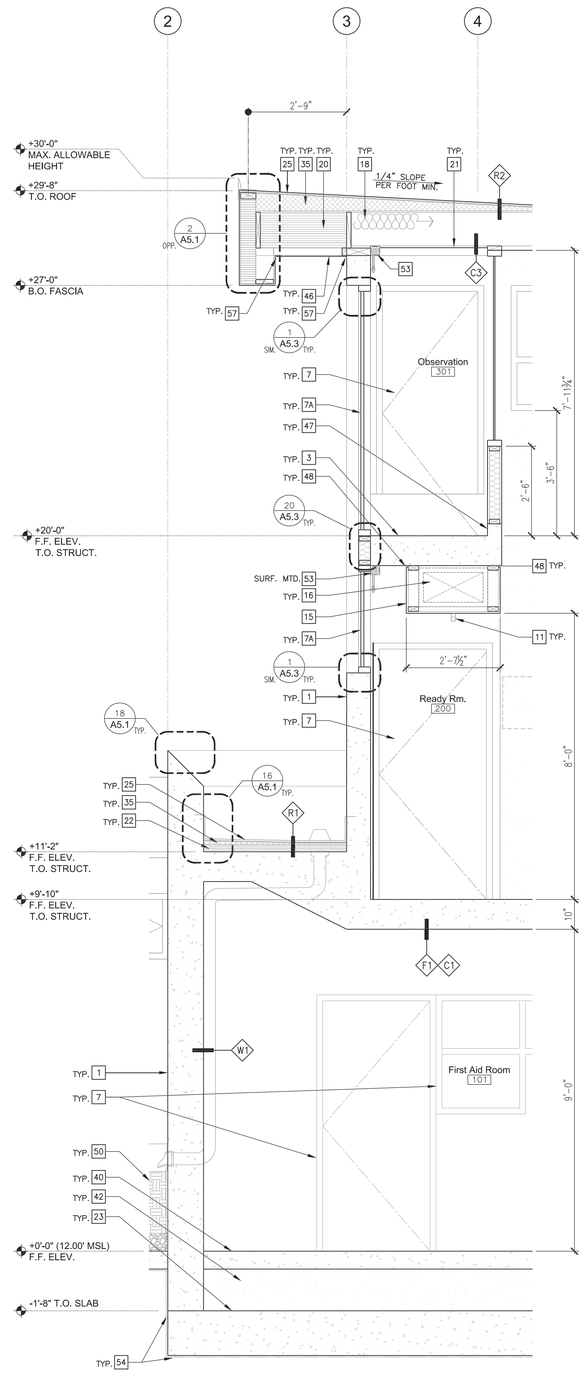

3 WALL SECTION
1/2"= 1'-0"

1. CONFIRM WITH ARCHITECT LOCATION OF EXPOSED CONDUIT OR SURFACE MOUNTED BOXES, PRIOR TO INSTALLATION.
2. THE HIGHEST POINT OF THE ROOF, EQUIPMENT, OR ANY VENT, PIPE, ANTENNA OR OTHER PROJECTION SHALL NOT EXCEED 30 FEET ABOVE GRADE.
3. TYPICAL: FOR PANEL LAYOUT, SEE SHEET A2.1

7A ALUMINUM FRAME WINDOW SYSTEM, SEE WINDOW SCHED.
7B SINGLE GLAZED WINDOWS, BUTT JOINT
8 BUILDING ADDRESS NUMBER PER SPECS. AND **9/A5.4 SIM.**
9 EXTERIOR GUARDRAIL. SEE DETAIL **6, 9, 13/A5.2**
10 OVERHEAD DOOR. PER DOOR SCHED.
11 LIGHT FIXTURE PER ELECTRICAL DWG'S.
12 BUILDING SIGNAGE – SEE DETAIL **9/A5.4**
13 FINISHED GRADE
14 EXPOSED CONCRETE OR CMU BLOCK– SEALED PER SPEC.
15 GYP. BOARD SOFFIT / CEILING, SEE SCHEDULE.
16 HVAC EQUIPMENT / DUCTS. PER MECHANICAL DWG'S.
17 DOOR LOUVER – SEE MECH. DWGS.
18 BATT INSULATION: ROOF = R30 MIN., EXT. WALLS ARE 8" CONCRETE (NO INSULATION)
19 PLYWOOD SHEATHING PER STRUCT. DWG'S.
20 FRAMING PER STRUCT. DWG'S.
21 GYP. BOARD. & FINISH PER SCHEDULE
22 HIGH PERFORMANCE BLANKET INSULATION
23 CONCRETE FOUNDATION / SLAB PER STRUCT. DWG'S.
23A ERROSION CONTROL MAT PER CIVIL
24 CEILING JOISTS – SEE STRUCTURAL
25 MEMBRANE ROOF OVER FIBERGLASS MAT GYPSUM ROOF BOARD, PER SPECS.
26 CABINETRY / COUNTER, SEE INTERIOR ELEVATIONS
27 CONCRETE SPLASH BLOCK – SEE DETAIL **1/A5.2**
28 MECHANICAL LOUVER, PER MECHANICAL DWG'S & **2/A5.2**
29 COPPER ROOF DRAIN/OVERFLOW OUTLET SPOUT. SEE DETAIL **20/A5.1** SIM. SEE PLUMBING FOR TYPE OF DRAIN
30 HOOD EXHAUST PER MECHANICAL DRAWINGS. FLASHING
31 ACCESSIBLE BUILDING ENTRANCE IDENTIFICATION SIGN. SEE DTL. **6/A5.0**
32 FIRE ALARM BELL LOCATION
33 FREE STANDING CONC. WALL
34 DOOR ACCESS KEYPAD MOUNTED AT ACCESSIBLE HEIGHT, 4'–0" A.F.F. – SEE ELECTRICAL DRAWINGS.
35 TAPERED INSULATION, PER ROOF PLAN AND SPECS – ALSO SEE **8/5.1**
36 METAL STAIR W/ CONCRETE TREADS
37 SPEAKER, PER ELECTRICAL
38 LOCKERS PER SPECS.
39 CONCRETE FLATWORK – 5" THICK WITH #3 AT 18" O.C.E.W., TYP. OVER COMPACTED BASE – NATURAL GRAY CONCRETE WITH LIGHT BROOM FINISH, TYP. – SLOPE AWAY FROM BUILDING
40 CONCRETE SLAB OVER SAND BASE OVER STRUCTURAL SLAB – SEE STRUCTRAL DWG'S
41 HOSE BIB BOX PER PLUMBING DWG'S
42 SAND BED FOR PLUMBING PIPES & CONDUITS
43 ROOF ACCESS LADDER AND HATCH – SEE DETAIL **3/A5.1**
44 RESCUE GURNEY BED PER SPECS
45 BINOCULAR CEILING MOUNT – SEE DETAIL **8/A5.4**
46 CEMENT FIBER BOARD SOFFIT
47 TYPICAL CONCRETE CURB PER SEE STRUCTURAL – SEE DETAIL **14/A5.2**
48 1/2" ALUM. "I" REVEAL REGLET BY 'FRYREGLET': TDM–TDM–625–75, WHERE GYPSUM BOARD MEETS CONCRETE WALL/CEILING, – DO NOT PAINT – SEE SEE DETAIL 20/A5.2
49 SUSPENDED ACOUSTICAL CEILING TILE – PER SPECS
50 FLOW–THROUGH PLANTER: BIO–RETENTION SOIL OVER 6" GRAVEL BED W/ PEFORATED PIPE – DISCHARGE THROUGH WEEP HOLES – SEE CIVIL DWGS.
51 FIRE RISER – SEE CIVIL & PLUMBING FOR CONTINUATION
52 GARAGE DOOR OPERATOR AND TROLLEY
53 WINDOW ROLLER SHADE PER SPECS (RECESSED U.N.O.) – SEE DETAIL **19/A5.4**
54 BELOW GRADE WATERPROOFING – SEE DETAIL **8/ A5.6**
55 LINE INSIDE OF ALL PLANTER WALLS AND FLOOR WITH WATERPROOFING MEMBRANE PER SPECS – TERMINATE WITH COPPER FLASHING AT TOP, SIMILAR TO DETAIL **8/A5.6**
56 2x4 WEEP HOLE OPENING FOR BIO–RETENTION PLANTER DRAINAGE
57 'F' REVEAL – (FRY REGLET FDM–375–V–50 AT OUTSIDE PERIMETER & FCP–J CHANNEL AT INSIDE PERIMETER)
58 12" HIGH WOOD FRAMED PLATFORM – SEE DETAIL **8 & 12/A5.7**
59 TYPICAL VERTICAL COPPER SEAM – SEE DETAIL **2 & 5/A5.1 AND 10/A5.6**
60 TOP OF PARAPET SHALL BE ANGLED 45° – SEE DETAIL **18/A5.1**
61 CONCRETE PANEL JOINTS – SEE SHEET A2.1

A-12

Dominy + Associates Architects @ domusstudio
2150 West Washington, Suite 303
San Diego, California 92110
Tel 619.692.9393
Fax 619.692.9394
domusstudio.com

SPEC. NO. 8147

LICENSED ARCHITECT DOMINIC POLITO No. C12113 REN 9.30.15 STATE OF CALIFORNIA

PLANS FOR THE CONSTRUCTION OF

South Mission Beach Lifeguard Station

Wall Sections — A3.1

CITY OF SAN DIEGO, CALIFORNIA
ENGINEERING & CAPITAL PROJECTS
ARCHITECTURAL ENGINEERING & CONTRACTS DIVISION
SHEET 30 OF 94 SHEETS

WBS S-00791

APPROVED: _____ FOR CITY ENGINEER — DATE 10/13/2014

SUBMITTED BY: JIHAD SLEIMAN, PROJECT MANAGER

DESCRIPTION	BY	APPROVED	DATE	FILMED
ORIGINAL	WH/TT			

YOUSIF BENYAMIN, PROJECT ENGINEER
218–1693
CCS27 COORDINATES
1858–6253
CCS83 COORDINATES

CONTRACTOR _____ DATE STARTED _____
INSPECTOR _____ DATE COMPLETED _____

32849–30–D

Proprietary design. These drawings and design are protected by common law copyright. All patentable material contained herein and originating with Dominy + Associates Architects @ domusstudio LLP shall be the property of Dominy + Associates Architects @ domusstudio LLP

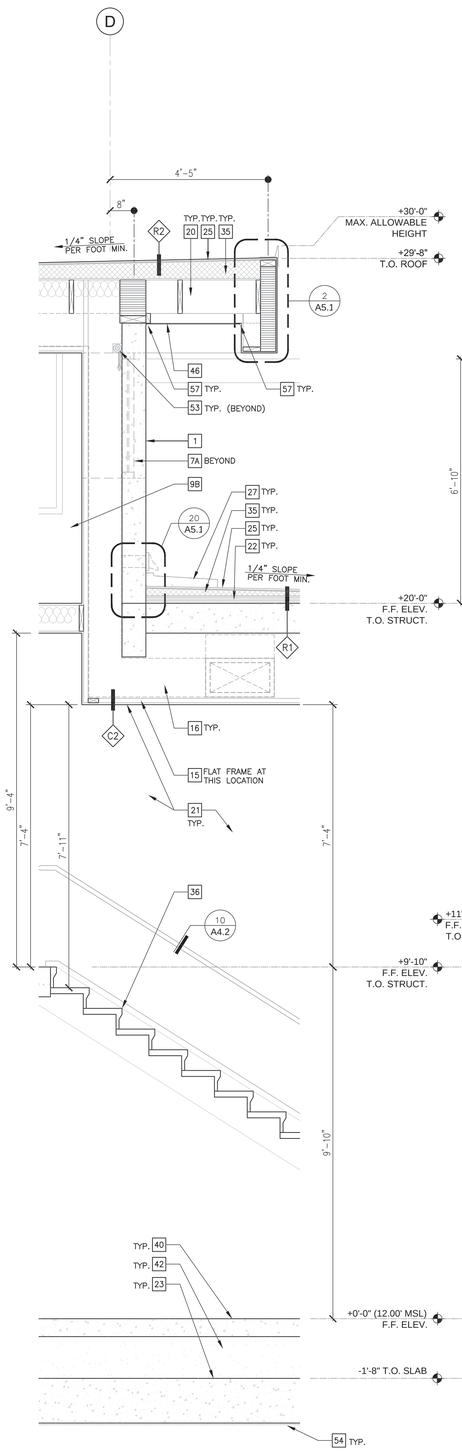

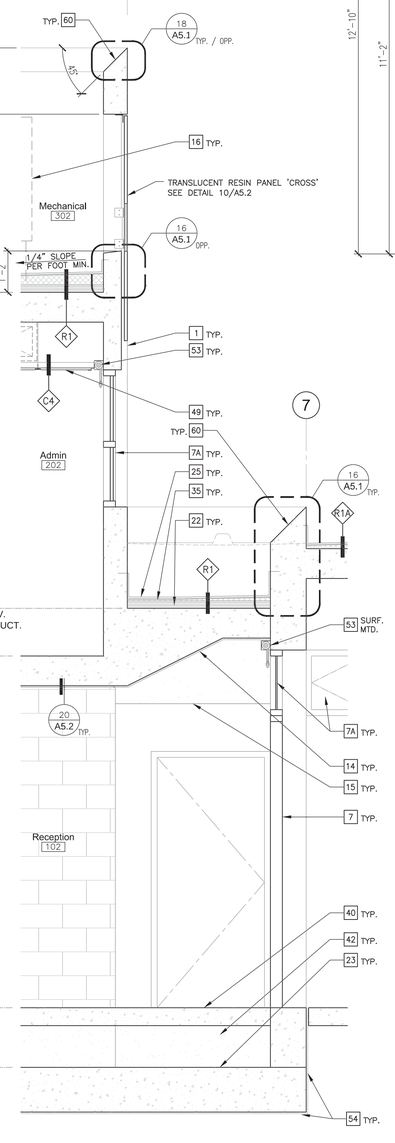

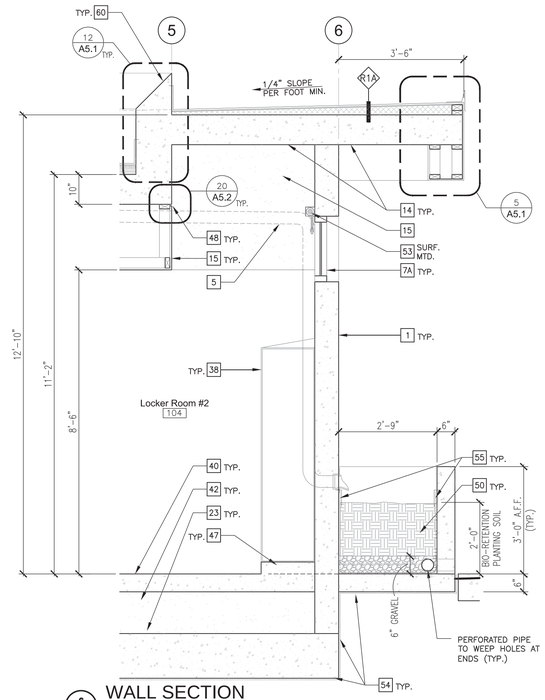

6 WALL SECTION
1/2"= 1'-0"

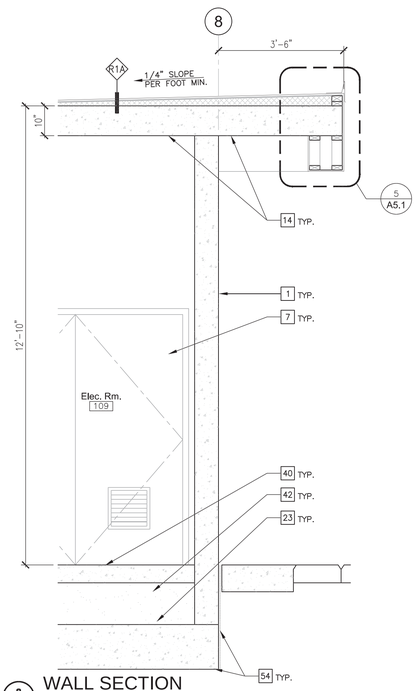

8 WALL SECTION
1/2"= 1'-0"

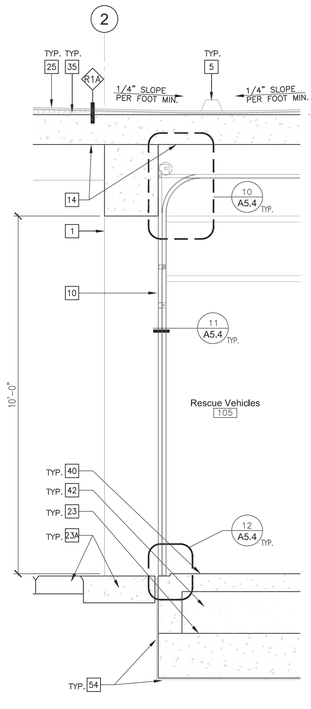

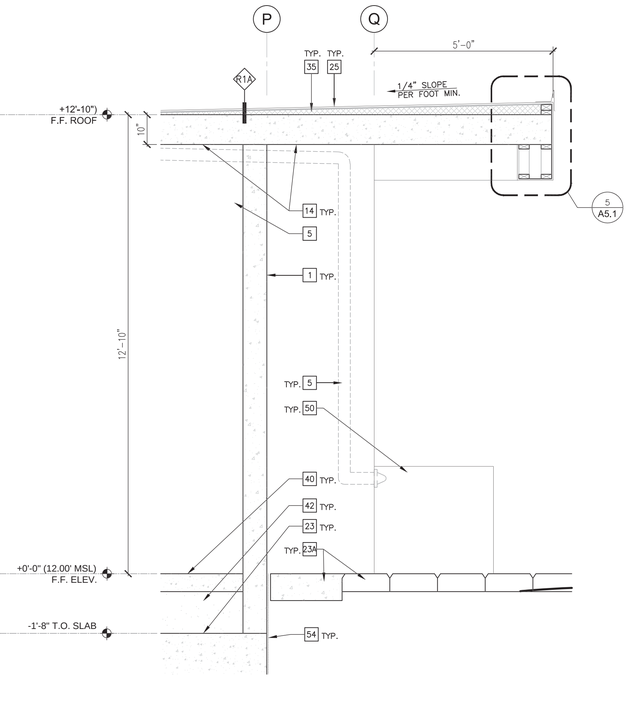

4 WALL SECTION
1/2"= 1'-0"

5 WALL SECTION
1/2"= 1'-0"

7 WALL SECTION
1/2"= 1'-0"

9 WALL SECTION
1/2"= 1'-0"

Elevation / Section Keyed Notes

1. CAST IN PLACE CONCRETE – SMOOTH TEXTURED FINISH PER SPECIFICATIONS (SEAL ALL EXPOSED CONCRETE & CMU) – SEE DETAIL **8 & 11/A5.2** FOR FORM TIE
2. CMU, FINISH PER SPEC.
3. CAST IN PLACE ROOF / FLOOR – SMOOTH FINISH (NON–SLIP FINISH AT FLOORS)
4. GRAFFITI COATING TYPICAL
5. ROOF DRAIN & OVERFLOW PER PLAN
6. COPPER FASCIA – SEE DETAIL **2 & 5 /A5.1**
7. WINDOW / DOOR SYSTEM FRAMES PER SCHEDULE & SPEC.
7A. ALUMINUM FRAME WINDOW SYSTEM, SEE WINDOW SCHED.
7B. SINGLE GLAZED WINDOWS, BUTT JOINT
8. BUILDING ADDRESS NUMBER PER SPECS. AND **9/A5.4 SIM.**
9. EXTERIOR GUARDRAIL. SEE DETAIL **6, 9, 13/A5.2**
10. OVERHEAD DOOR. PER DOOR SCHED.
11. LIGHT FIXTURE PER ELECTRICAL DWG'S.
12. BUILDING SIGNAGE – SEE DETAIL **9/A5.4**
13. FINISHED GRADE
14. EXPOSED CONCRETE OR CMU BLOCK– SEALED PER SPEC.
15. GYP. BOARD SOFFIT / CEILING, SEE SCHEDULE.
16. HVAC EQUIPMENT / DUCTS. PER MECHANICAL DWG'S.
17. DOOR LOUVER – SEE MECH. DWGS.
18. BATT INSULATION: ROOF = R30 MIN., EXT. WALLS ARE 8" CONCRETE (NO INSULATION)
19. PLYWOOD SHEATHING PER STRUCT. DWG'S.
20. FRAMING PER STRUCT. DWG'S.
21. GYP. BOARD. & FINISH PER SCHEDULE
22. HIGH PERFORMANCE BLANKET INSULATION
23. CONCRETE FOUNDATION / SLAB PER STRUCT. DWG'S.
23A. ERROSION CONTROL MAT PER CIVIL
24. CEILING JOISTS – SEE STRUCTURAL
25. MEMBRANE ROOF OVER FIBERGLASS MAT GYPSUM ROOF BOARD, PER SPECS.
26. CABINETRY / COUNTER, SEE INTERIOR ELEVATIONS
27. CONCRETE SPLASH BLOCK – SEE DETAIL **1/A5.2**
28. MECHANICAL LOUVER, PER MECHANICAL DWG'S & **2/A5.2**
29. COPPER ROOF DRAIN/OVERFLOW OUTLET SPOUT. SEE DETAIL **20/A5.1** SIM. SEE PLUMBING FOR TYPE OF DRAIN
30. HOOD EXHAUST PER MECHANICAL DRAWINGS. FLASHING
31. ACCESSIBLE BUILDING ENTRANCE IDENTIFICATION SIGN. SEE DTL. **6/A5.0**
32. FIRE ALARM BELL LOCATION
33. FREE STANDING CONC. WALL
34. DOOR ACCESS KEYPAD MOUNTED AT ACCESSIBLE HEIGHT, 4'–0" A.F.F. – SEE ELECTRICAL DRAWINGS.
35. TAPERED INSULATION, PER ROOF PLAN AND SPECS – ALSO SEE **8/5.1**
36. METAL STAIR W/ CONCRETE TREADS
37. SPEAKER, PER ELECTRICAL
38. LOCKERS PER SPECS.
39. CONCRETE FLATWORK – 5" THICK WITH #3 AT 18" O.C.E.W., TYP. OVER COMPACTED BASE – NATURAL GRAY CONCRETE WITH LIGHT BROOM FINISH, TYP. – SLOPE AWAY FROM BUILDING
40. CONCRETE SLAB OVER SAND BASE OVER STRUCTURAL SLAB – SEE STRUCTRAL DWG'S
41. HOSE BIB BOX PER PLUMBING DWG'S
42. SAND BED FOR PLUMBING PIPES & CONDUITS
43. ROOF ACCESS LADDER AND HATCH – SEE DETAIL **3/A5.1**
44. RESCUE GURNEY BED PER SPECS
45. BINOCULAR CEILING MOUNT – SEE DETAIL **8/A5.4**
46. CEMENT FIBER BOARD SOFFIT
47. TYPICAL CONCRETE CURB PER SEE STRUCTURAL – SEE DETAIL **14/A5.2**
48. 1/2" ALUM. "I" REVEAL REGLET BY 'FRYREGLET': TDM–TDM–625–75, WHERE GYPSUM BOARD MEETS CONCRETE WALL/CEILING, – DO NOT PAINT – SEE SEE DETAIL 20/A5.2
49. SUSPENDED ACOUSTICAL CEILING TILE – PER SPECS
50. FLOW–THROUGH PLANTER: BIO–RETENTION SOIL OVER 6" GRAVEL BED W/ PEFORATED PIPE – DISCHARGE THROUGH WEEP HOLES – SEE CIVIL DWGS.
51. FIRE RISER – SEE CIVIL & PLUMBING FOR CONTINUATION
52. GARAGE DOOR OPERATOR AND TROLLEY
53. WINDOW ROLLER SHADE PER SPECS (RECESSED U.N.O.) – SEE DETAIL **19/A5.4**
54. BELOW GRADE WATERPROOFING – SEE DETAIL **8/ A5.6**
55. LINE INSIDE OF ALL PLANTER WALLS AND FLOOR WITH WATERPROOFING MEMBRANE PER SPECS – TERMINATE WITH COPPER FLASHING AT TOP, SIMILAR TO DETAIL **8/A5.6**
56. 2x4 WEEP HOLE OPENING FOR BIO–RETENTION PLANTER DRAINAGE
57. "F" REVEAL – (FRY REGLET FDM–375–V–50 AT OUTSIDE PERIMETER & FCP–J CHANNEL AT INSIDE PERIMETER)
58. 12" HIGH WOOD FRAMED PLATFORM – SEE DETAIL **8 & 12/A5.7**
59. TYPICAL VERTICAL COPPER SEAM – SEE DETAIL **2 & 5/A5.1 AND 10/A5.6**
60. TOP OF PARAPET SHALL BE ANGLED 45° – SEE DETAIL **18/A5.1**
61. CONCRETE PANEL JOINTS – SEE SHEET A2.1

Elevation / Section Notes

1. CONFIRM WITH ARCHITECT LOCATION OF EXPOSED CONDUIT OR SURFACE MOUNTED BOXES, PRIOR TO INSTALLATION.
2. THE HIGHEST POINT OF THE ROOF, EQUIPMENT, OR ANY VENT, PIPE, ANTENNA OR OTHER PROJECTION SHALL NOT EXCEED 30 FEET ABOVE GRADE.
3. TYPICAL: FOR PANEL LAYOUT, SEE SHEET A2.1

A-13

Dominy + Associates Architects @ domusstudio
2150 West Washington, Suite 303
San Diego, California 92110
Tel 619.692.9393
Fax 619.692.9394
domusstudio.com

SPEC. NO. 8147

LICENSED ARCHITECT CHRISTINE POTTER DOMINY No. C12113 REN 9.30.15 STATE OF CALIFORNIA

PLANS FOR THE CONSTRUCTION OF

South Mission Beach Lifeguard Station

Wall Sections

A3.2

CITY OF SAN DIEGO, CALIFORNIA
ENGINEERING & CAPITAL PROJECTS
ARCHITECTURAL ENGINEERING & CONTRACTS DIVISION
SHEET 31 OF 94 SHEETS

WBS S-00791

APPROVED: FOR CITY ENGINEER — DATE 10/13/2014

SUBMITTED BY: JIHAD SLEIMAN, PROJECT MANAGER

DESCRIPTION	BY	APPROVED	DATE	FILMED
ORIGINAL	WH/TT			

YOUSIF BENYAMIN, PROJECT ENGINEER

218–1693 CCS27 COORDINATES

1858–6253 CCS83 COORDINATES

CONTRACTOR _____ DATE STARTED _____
INSPECTOR _____ DATE COMPLETED _____

32849–31–D

South Mission Beach Lifeguard Station
San Diego, California

© COPYRIGHT October 13, 2014 at 8:04AM

Proprietary design. These drawings and design are protected by common law copyright. All patentable material contained herein and originating with Dominy + Associates Architects @ domusstudio LLP shall be the property of Dominy + Associates Architects @ domusstudio LLP

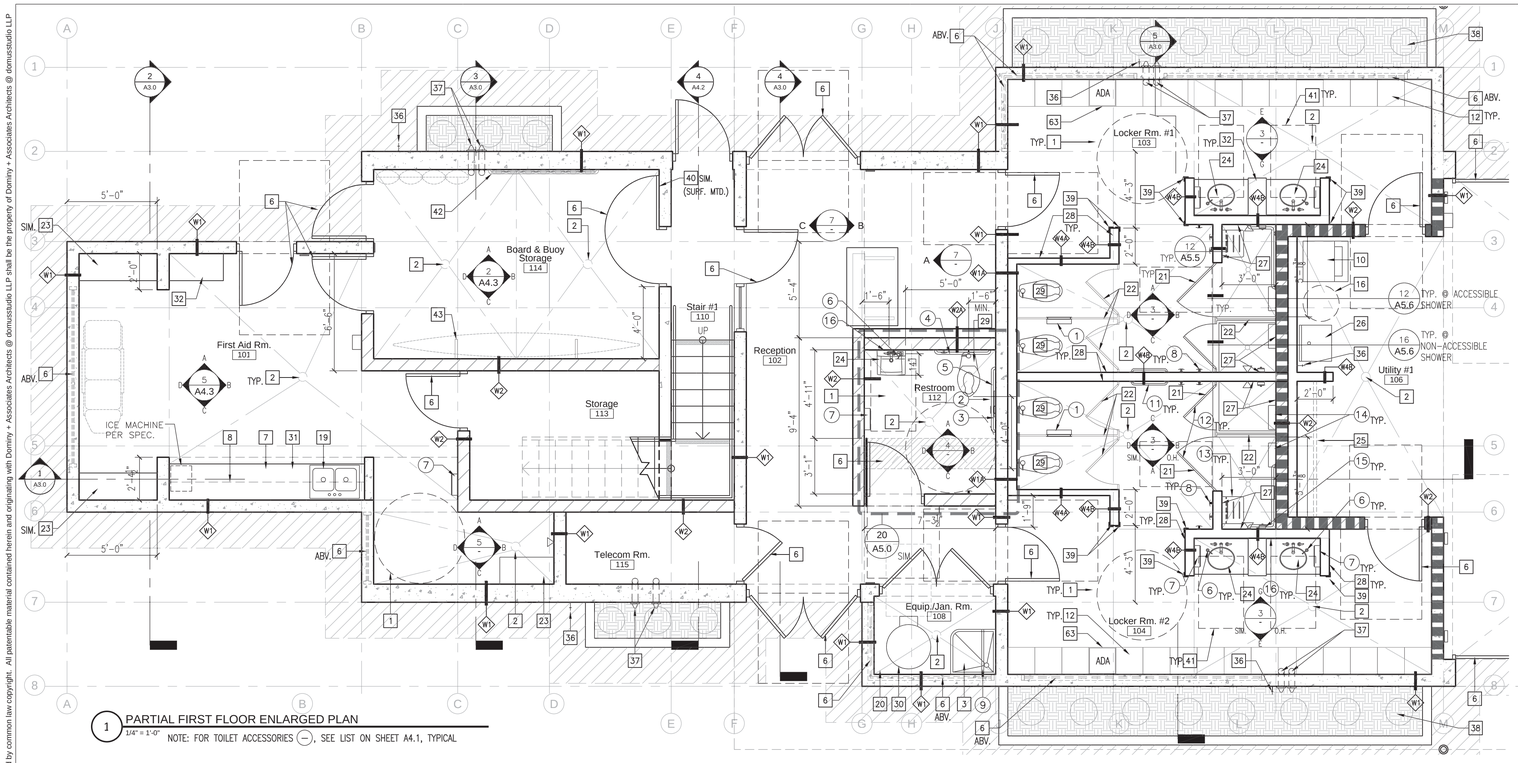

1 PARTIAL FIRST FLOOR ENLARGED PLAN
1/4" = 1'-0" NOTE: FOR TOILET ACCESSORIES (—), SEE LIST ON SHEET A4.1, TYPICAL

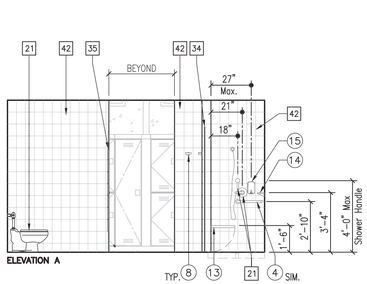

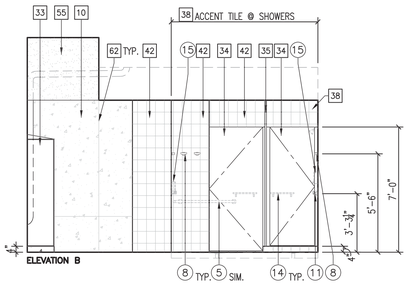

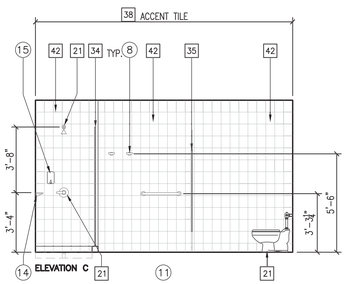

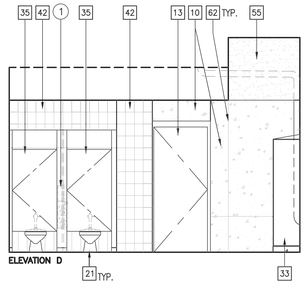

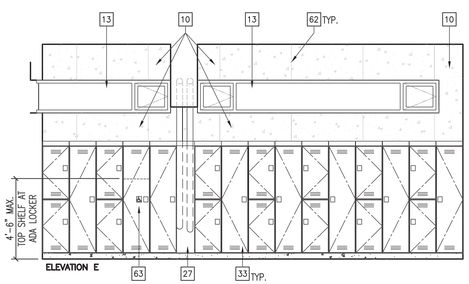

3 Locker Rm. 103 - (Locker Rm. 104 Similar/Opposite)
1/4" = 1'-0"

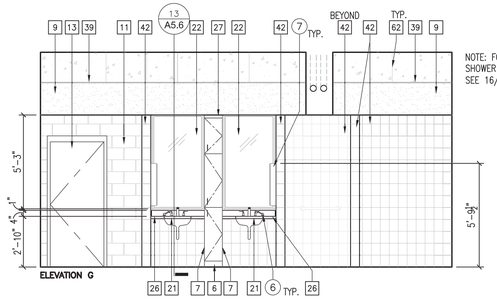

Notes

1. FOR RESTROOM #112: SEE DETAILS ON SHEET A5.0 FOR TYPICAL ACCESSIBILITY NOTES AND DETAIL 20/A5.0
2. SEE SHEET 14/A5.0 & 10/A5.0 FOR WALL AND DOOR SIGNAGE AT RESTROOMS.
3. SEE SHEET 8/A5.0 FOR GRAB BAR DETAIL.
4. SEE SHEET A4.1 FOR RESTROOM ACCESSORY LEGEND (—)

NOTE

LOCKER ROOMS ARE STRICTLY FOR THE USE OF LIFEGUARD STAFF ONLY

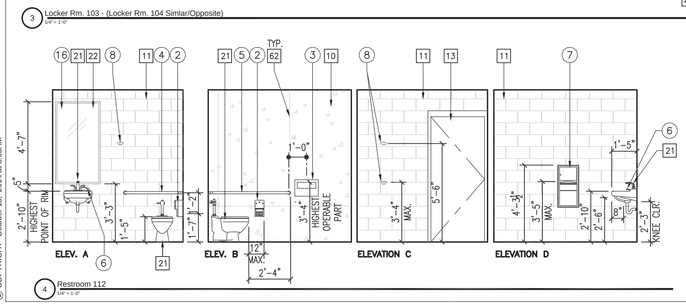

4 Restroom 112
1/4" = 1'-0"

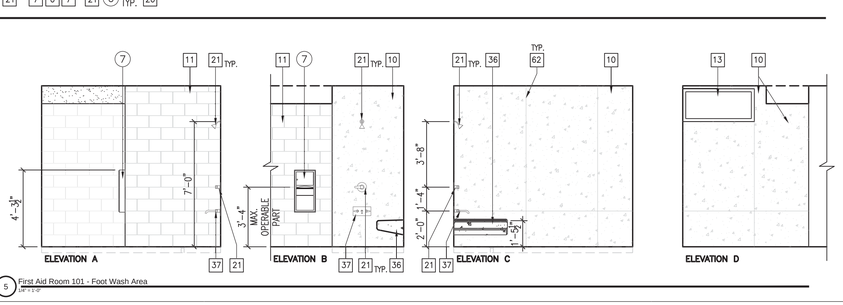

5 First Aid Room 101 - Foot Wash Area
1/4" = 1'-0"

Plan Keyed Notes

1. 5'-0" DIA. HANDICAPPED TURNING RADIUS
2. DRAIN – SEE PLUMBING PLANS AND DETAIL 19/A5.1
3. MOP SINK – SEE PLUMBING PLANS
4. SURFACE MOUNTED LIGHT – SEE ELECTRICAL PLANS
5. TILE – SEE FINISH SCHEDULE
6. WINDOW / DOOR – PER SCHEDULE.
7. LOWER CABINETS PER DETAILS 14/A5.5
8. UPPER CABINETS PER DETAIL 13/A5.5
9. COUNTERTOP – SEE DETAILS ON SHEET A5.5
10. ELECTRIC WASHER & DRYER. SEE PLUMBING PLANS & SPECIFICATIONS
11. BUILT–IN SHELF
12. LOCKERS PER SPECS.
13. REFRIGERATOR SPACE. PROVIDE WATER & POWER.
14. COMBINATION TYPE II EXHAUST HOOD & MICROWAVE OVEN SEE SPECS. & ELECTRICAL DW
15. GARBAGE DISPOSAL UNDERSINK. PROVIDE POWER & SWITCH
16. CENTRIFUGAL DRYER BY OWNER
17. UNDER COUNTER DISHWASHER PER SPECIFICATIONS. VERIFY DISHWASHER CLEARANCES. S INTERIOR ELEVATIONS.
18. SLIDE–IN ELECTRIC RANGE W/ TYPE II HOOD ABOVE (400 CFM). SEE SPECS. & INSTALL I MANUFACTURER'S INSTRUCTIONS.
19. SEAMLESS STAINLESS STEEL SINK PER SPEC. HOOK–UP PER PLUMBING PLANS.
20. MECHANICAL SHAFT – SEE TYPICAL DETAIL 6/A7.4
21. SHOWER DOOR PER SPEC.
22. TOILET & SHOWER PARTITIONS PER SPEC.
23. CONCRETE SEAT @ FOOT WASH, PER DETAIL 17/A5.2
24. SINK, PER PLUMBING PLANS
25. 2" DIA. GALV. PIPE FOR HANGING WET SUITS
26. UTILITY SINK, PER PLUMBING
27. WALL TILE FOR SHOWER (2 SIDES – TYP.) – SEE DETAIL 16/A5.5
28. FRP FROM FLOOR TO CEILING, TYP.
29. TOILET PER PLUMBING
30. WATER HEATER PER PLUMBING
31. STAINLESS STEEL COUNTERTOP – SEE DETAIL 14/A5.5, SIM.
32. FULL HEIGHT CABINET – SEE DETAIL 7/A5.4
33. CAST–IN–PLACE FLOOR DECK
34. GUARDRAIL – SEE DETAIL
35. TV MOUNTING ARM PER SPECS.
36. HOSE BIB BOX PER PLUMBING DWG'S
37. COPPER ROOF DRAIN/OVERFLOW OUTLET SPOUT. SEE DETAIL 20/A5.1 SIM. SEE PLUMBING TYPE OF DRAIN
38. FLOW–THROUGH PLANTER: BIO–RETENTION SOIL OVER 6" GRAVEL BED W/ PEFORATED PI DISCHARGE THROUGH WEEP HOLES – SEE CIVIL DRAWINGS
39. CORNER GUARD PER SPEC – SEE DETAIL 5/A5.4
40. ELECTROMAGNETIC DOOR HOLD – SEE DETAIL 1/A5.6
41. 30"x48" CLEAR FLOOR SPACE
42. SWIM FINS RACK – HORIZ. PIPE BARS, MOUNT TO CONC. WALL SEE 2/A4.3 & 5/A5.7
43. WALL RACK FOR RESCUE BOARDS, SEE DETAIL 2/A5.7

Int. Elevation Keyed Notes

1. BUILT–IN CABINETS PER DETAILS 13/A5.5 & 14/A5.5, FOR FULL HT. CAB SEE DETAIL 7/A5.4
2. PANTRY STORAGE
3. ADJUSTABLE SHELVES. TYP.
4. SLIDE IN ELECTRIC RANGE
5. TYPE II HOOD/MICROWAVE (400 CFM) PER SPECIFICATIONS. ROUTE HOOD EXHAUST THRU WALL. SEE MECHANICAL PLANS AND HOOD MANUFACTURER'S RECOMMENDATIONS
6. 4" KICK SPACE
7. END PANEL TO MATCH CABINET FRONTS
8. FIRE EXTINGUISHER LOCATION: SURFACE MOUNTED. REFER TO SPECS. FOR F.E., ALSO SEE DETAIL 2/A5.4 FOR RECESS MOUNTED (PER PLAN)
9. GYPSUM WALL BOARD PER FINISH SCHEDULE
10. CAST IN PLACE CONCRETE – SAND BLAST TEXTURED FINISHED PER SPEC.
11. MASONRY WALL, SEALED, TYP.– PER FINISH SCHEDULE & SPECS.
12. WORK COUNTER – SEE DETAILS ON SHEET A5.5
13. WINDOW / DOOR PER SCHEDULES
14. BREAK METAL
15. REFRIGERATORS PER SPEC.
16. BUILT–IN DESK – SEE 5/A5.5 SIM
17. ELECTRIC WASHER & DRYER, PROVIDE POWER. SEE SPECS & PLUMBING DWG'S. FOR HOOK–UP REQUIREMENTS.
18. MARKER BOARD, PER SPECIFICATIONS
19. MECHANICAL GRILLE, PER MECHANICAL DWG'S.
20. LIGHT FIXTURE, PER ELECT. DWG'S.
21. PLUMBING FIXTURE. SEE PLUMBING DWG'S. & SPEC'S.
22. MIRROR. SEE SPEC'S.
23. OVERHEAD DOOR TRACK, PER DOOR SCHEDULE
24. L.E.D. DISPLAY
25. PEGBOARD
26. COUNTERTOP PER FINISH SCHEDULE
27. FIXED FILLER PANEL TO MATCH CABINETS/LOCKERS WHERE APPLICABLE
28. HOSE BIB BOX PER PLUMBING DWG'S
29. CEILING MOUNTED ADJUSTABLE BINOCULAR RAIL PER SPEC
30. STEEL COLUMN PER STRUCTURAL – PAINTED
31. ALUMINUM HANDRAIL / GUARDRAIL PER DETAILS & SPECS.
32. STEEL STAIR W/ CONCRETE TREADS
33. LOCKERS PER SPEC.
34. SHOWER DOOR PER SPEC.
35. TOILET & SHOWER PARTITIONS PER SPEC.
36. CONCRETE SEAT PER DETAIL 17/A5.2
37. MOP SINK MIXING VALVES, SEE PLUMBING
38. FIELD TILE – PER FINISH SCHEDULE. SEE 16/A5.5 (FOR SHOWER ELEVATION)
39. 1/2" ALUM. 'T' REVEAL REGLET BY 'FRYREGLET': TDM–TDM–625–75, WHERE GYPSUM BOARD MEETS CONCRETE WALL/CEILING, – DO NOT PAINT – SEE SEE DETAIL 20/A5.2
40. VERTICAL COUNTER SUPPORTS – SEE 2/A4.1 FOR SPACING & 1/A5.5
41. RECEPTION DESK PER DETAIL 15/A5.5
42. FIELD TILE PER FINISH SCHEDULE
43. UNDER COUNTER DISHWASHER PER SPECIFICATIONS. VERIFY DISHWASHER CLEARANCES
44. WALL MOUNTED ROOF ACCESS LADDER, SEE DETAIL 13/A5.1
45. BUILT–IN PLATFORM
46. WALL MOUNTED UTILITY SINK PER PLUMBING DWG'S.
47. MEDICAL PAC PROVIDED BY OWNER HANGING SYSTEM PROVIDED AND INSTALLED BY CONTRACTOR
48. EXPOSED MECHANICAL DUCT PER MECH. DWGS. – PAINT MATTE BLACK
49. PROVIDE (12) GALV. J–HOOKS FOR HANGING BUOYS – REFER TO OWNER FOR LAYOUT
50. SWIM FINS RACK – HORIZ. PIPE BARS, MOUNT TO CONC. WALL SEE 2/A4.3 & 5/A5.7
51. 2" DIA. GALV. PIPE FOR HANGING WET SUITS
52. CENTRIFUGAL DRYER BY OWNER
53. FULL HT. LOCKABLE CABINET FOR RADIOS & CHARGERS W/ (4) ADJ. SHELVING AND LOUVERED DOORS – SEE DTL. 7/A5.4 SIM.
54A. ELECTRICAL OUTLET FOR RADIO CHARGERS (PER ELEC.)
54B. ELECTRICAL OUTLET W/ CABLE TV (PER ELEC)
55. GYP. BD. SOFFIT
56. ICE MAKER PER SPEC
57. SEAMLESS STAINLESS STEEL SINK PER SPEC. HOOK–UP PER PER PLUMBING PLANS. ALSO SEE DETAIL 18/A5.5
58. STAINLESS STEEL BACKSPLASH TO UNDERSIDE OF UPPER CABINETS
59. 12"(D) x 48"(L) VINYL COATED OPEN WIRE SHELVING W/ BRACKET SUPPORTS
60. WALL RACK FOR RESCUE BOARDS, SEE DETAIL 2/A5.7
61. 12" HIGH WOOD FRAMED PLATFORM – SEE DETAIL 8 & 12/A5.7
62. CONCRETE PANEL JOINT LOCATION
63. ACCESSIBLE LOCKER (1 TIER): PROVIDE RECESS HANDLE W/ LIFTING TRIGGER HARDWARE

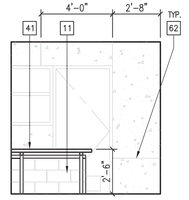

7 Reception Desk
1/4" = 1'-0"

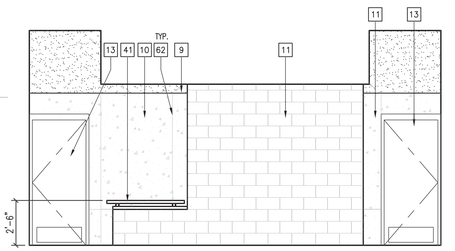

7 Reception
1/4" = 1'-0"

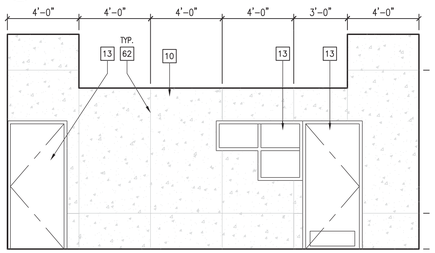

7 Reception
1/4" = 1'-0"

Dominy + Associates Architects @ domusstudio
2150 West Washington, Suite 303
San Diego, California 92110
Tel 619.692.9393
Fax 619.692.9394
domusstudio.com

A-14

SPEC. NO. 8147

LICENSED ARCHITECT — JOSEPH M. DOMINY — No. C12113 — REN 9.30.15 — STATE OF CALIFORNIA

PLANS FOR THE CONSTRUCTION OF

South Mission Beach Lifeguard Station

Enlarged Plan + Interior Elevations — A4.0

CITY OF SAN DIEGO, CALIFORNIA
ENGINEERING & CAPITAL PROJECTS
ARCHITECTURAL ENGINEERING & CONTRACTS DIVISION
SHEET 32 OF 94 SHEETS

WBS S-00791

APPROVED: FOR CITY ENGINEER — DATE 10/13/2014

SUBMITTED BY: JIHAD SLEIMAN, PROJECT MANAGER

YOUSIF BENYAMIN, PROJECT ENGINEER

DESCRIPTION	BY	APPROVED	DATE	FILMED
ORIGINAL	WH/TT			

218–1693 CCS27 COORDINATES

1858–6253 CCS83 COORDINATES

CONTRACTOR _____ DATE STARTED _____
INSPECTOR _____ DATE COMPLETED _____

32849–32–D

© COPYRIGHT October 13, 2014 at 8:05AM

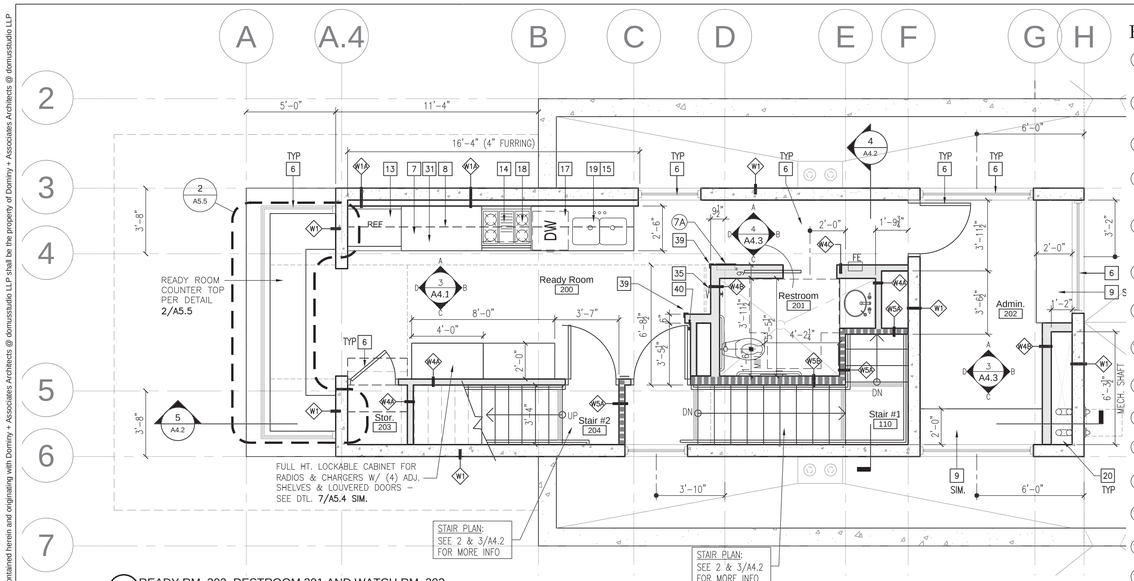

1 READY RM. 202, RESTROOM 201 AND WATCH RM. 203
1/4" = 1'-0"

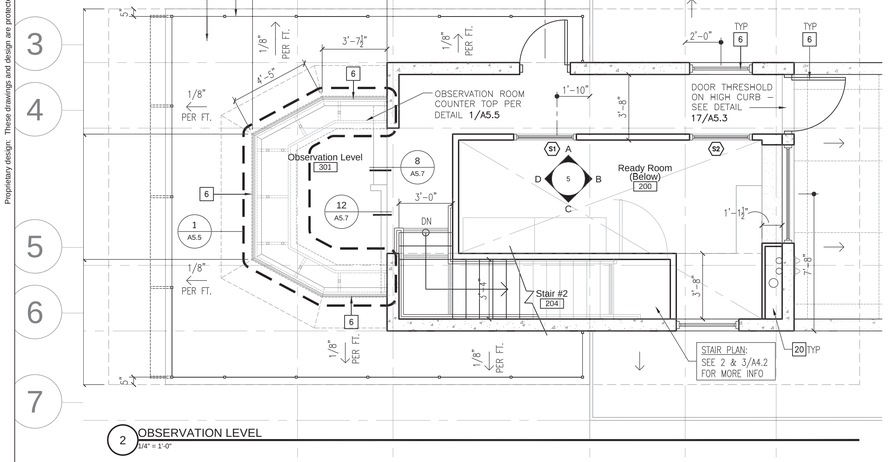

2 OBSERVATION LEVEL
1/4" = 1'-0"

Restroom Accessories

1	PARTITION MOUNTED 2 ROLL TOILET PAPER / SEAT COVER DISPENSER WITH NAPKIN DISPOSAL	MANUFACTURER: MODEL NO.:	BOBRICK B-3571
2	SURFACE MTD. MULTI-ROLL TOILET PAPER DISPENSER	MANUFACTURER: MODEL NO.:	BOBRICK B-2888
3	SURFACE MTD. SEAT COVER DISPENSER	MANUFACTURER: MODEL NO.:	BOBRICK B-221
4	36" HORIZONTAL STAINLESS STEEL HANDICAP GRAB BARS WITH SNAP FLANGES	MANUFACTURER: MODEL NO.:	BOBRICK B-6806 X 36
5	48" HORIZONTAL STAINLESS STEEL HANDICAP GRAB BARS WITH SNAP FLANGES	MANUFACTURER: MODEL NO.:	BOBRICK B-6806 X 48
6	LAVATORY/COUNTERTOP MOUNTED SOAP DISPENSER	MANUFACTURER: MODEL NO.:	BOBRICK B-8221
7	SURFACE MOUNTED PAPER TOWEL DISPENSER / WASTE RECEPTACLE	MANUFACTURER: MODEL NO.:	BOBRICK B-3699
7A	RECESSED PAPER TOWEL DISPENSER / WASTE RECEPTACLE	MANUFACTURER: MODEL NO.:	BOBRICK B-369
8	CLOTHES HOOK	MANUFACTURER: MODEL NO.:	BOBRICK B-6727
9	UTILITY SHELF WITH MOP / BROOM HOLDERS AND RAG HOOKS	MANUFACTURER: MODEL NO.:	BOBRICK B-224 X 30"
10	SHOWER SHELF CLAMPS	MANUFACTURER: MODEL NO.:	C.R. LAURANCE FA11
11	24" SURFACE MOUNTED TOWEL BAR	MANUFACTURER: MODEL NO.:	BOBRICK B-530 X 24
12	SHOWER DOOR (MIN. 36" CLR. ACCESSIBLE DOOR)	MANUFACTURER: MODEL NO.:	PER SPEC. PER SPEC.
13	SHOWER SEAT	MANUFACTURER: MODEL NO.:	BOBRICK B-5191
14	SHOWER SHELF	MANUFACTURER: MODEL NO.:	BOBRICK B-295-16
15	SHOWER SOAP DISPENSER	MANUFACTURER: MODEL NO.:	BOBRICK B-2111
16	CUSTOM SIZED MIRROR	MANUFACTURER: MODEL NO.:	BOBRICK B-290 CUSTOM SIZE

NOTE

LOCKER ROOMS ARE STRICTLY FOR THE USE OF LIFEGUARD STAFF ONLY

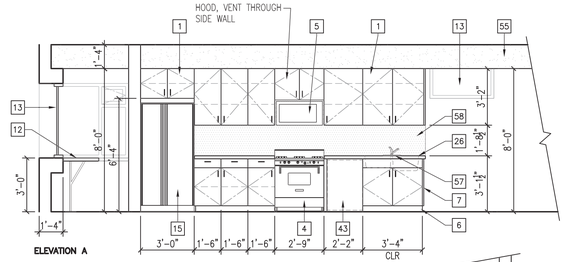

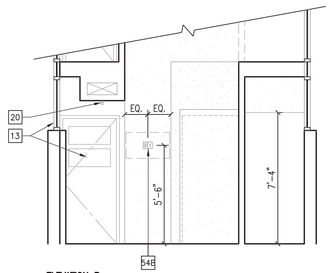

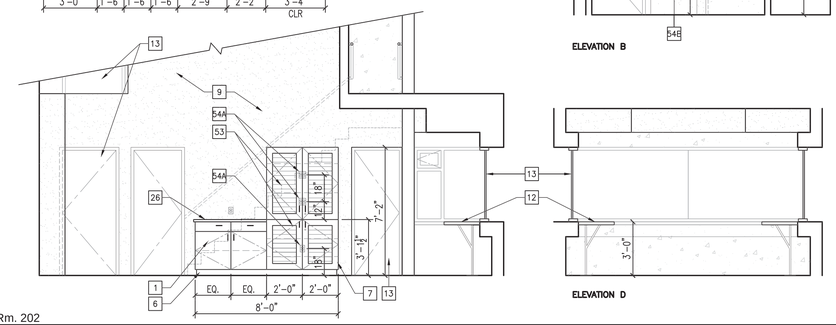

3 Ready Rm. 202
1/4" = 1'-0"

5 Observation Tower
1/4" = 1'-0"

Plan Keyed Notes

1. 5'-0" DIA. HANDICAPPED TURNING RADIUS
2. DRAIN – SEE PLUMBING PLANS AND DETAIL 19/A5.1
3. MOP SINK – SEE PLUMBING PLANS
4. SURFACE MOUNTED LIGHT – SEE ELECTRICAL PLANS
5. TILE – SEE FINISH SCHEDULE
6. WINDOW / DOOR – PER SCHEDULE.
7. LOWER CABINETS PER DETAILS 14/A5.5
8. UPPER CABINETS PER DETAIL 13/A5.5
9. COUNTERTOP – SEE DETAILS ON SHEET A5.5
10. ELECTRIC WASHER & DRYER. SEE PLUMBING PLANS & SPECIFICATIONS
11. BUILT-IN SHELF
12. LOCKERS PER SPECS.
13. REFRIGERATOR SPACE. PROVIDE WATER & POWER.
14. COMBINATION TYPE II EXHAUST HOOD & MICROWAVE OVEN SEE SPECS. & ELECTRICAL DWG'S.
15. GARBAGE DISPOSAL UNDERSINK. PROVIDE POWER & SWITCH
16. CENTRIFUGAL DRYER BY OWNER
17. UNDER COUNTER DISHWASHER PER SPECIFICATIONS. VERIFY DISHWASHER CLEARANCES. SEE INTERIOR ELEVATIONS.
18. SLIDE-IN ELECTRIC RANGE W/ TYPE II HOOD ABOVE (400 CFM). SEE SPECS. & INSTALL PER MANUFACTURER'S INSTRUCTIONS.
19. SEAMLESS STAINLESS STEEL SINK PER SPEC. HOOK-UP PER PLUMBING PLANS.
20. MECHANICAL SHAFT – SEE TYPICAL DETAIL 6/A7.4
21. SHOWER DOOR PER SPEC.
22. TOILET & SHOWER PARTITIONS PER SPEC.
23. CONCRETE SEAT @ FOOT WASH, PER DETAIL 17/A5.2
24. SINK, PER PLUMBING PLANS
25. 2" DIA. GALV. PIPE FOR HANGING WET SUITS
26. UTILITY SINK, PER PLUMBING
27. WALL TILE FOR SHOWER (2 SIDES – TYP.) – SEE DETAIL 16/A5.5
28. FRP FROM FLOOR TO CEILING, TYP.
29. TOILET PER PLUMBING
30. WATER HEATER PER PLUMBING
31. STAINLESS STEEL COUNTERTOP – SEE DETAIL 14/A5.5, SIM.
32. FULL HEIGHT CABINET – SEE DETAIL 7/A5.4
33. CAST-IN-PLACE FLOOR DECK
34. GUARDRAIL – SEE DETAIL
35. TV MOUNTING ARM PER SPECS.
36. HOSE BIB BOX PER PLUMBING DWG'S
37. COPPER ROOF DRAIN/OVERFLOW OUTLET SPOUT. SEE DETAIL 20/A5.1 SIM. SEE PLUMBING FOR TYPE OF DRAIN
38. FLOW-THROUGH PLANTER: BIO-RETENTION SOIL OVER 6" GRAVEL BED W/ PERFORATED PIPE – DISCHARGE THROUGH WEEP HOLES – SEE CIVIL DRAWINGS
39. CORNER GUARD PER SPEC – SEE DETAIL 5/A5.4
40. ELECTROMAGNETIC DOOR HOLD – SEE DETAIL 1/A5.6
41. 30"x48" CLEAR FLOOR SPACE
42. SWIM FINS RACK – HORIZ. PIPE BARS, MOUNT TO CONC. WALL SEE 2/A4.3 & 5/A5.7
43. WALL RACK FOR RESCUE BOARDS, SEE DETAIL 2/A5.7

Int. Elevation Keyed Notes

1. BUILT-IN CABINETS PER DETAILS 13/A5.5 & 14/A5.5, FOR FULL HT. CAB SEE DETAIL 7/A5.4
2. PANTRY STORAGE
3. ADJUSTABLE SHELVES. TYP.
4. SLIDE IN ELECTRIC RANGE
5. TYPE II HOOD/MICROWAVE (400 CFM) PER SPECIFICATIONS. ROUTE HOOD EXHAUST THRU WALL. SEE MECHANICAL PLANS AND HOOD MANUFACTURER'S RECOMMENDATIONS
6. 4" KICK SPACE
7. END PANEL TO MATCH CABINET FRONTS
8. FIRE EXTINGUISHER LOCATION: SURFACE MOUNTED. REFER TO SPECS. FOR F.E., ALSO SEE DETAIL 2/A5.4 FOR RECESS MOUNTED (PER PLAN)
9. GYPSUM WALL BOARD PER FINISH SCHEDULE
10. CAST IN PLACE CONCRETE – SAND BLAST TEXTURED FINISHED PER SPEC.
11. MASONRY WALL, SEALED, TYP.– PER FINISH SCHEDULE & SPECS.
12. WORK COUNTER – SEE DETAILS ON SHEET A5.5
13. WINDOW / DOOR PER SCHEDULES
14. BREAK METAL
15. REFRIGERATORS PER SPEC.
16. BUILT-IN DESK – SEE 5/A5.5 SIM
17. ELECTRIC WASHER & DRYER, PROVIDE POWER. SEE SPECS & PLUMBING DWG'S. FOR HOOK-UP REQUIREMENTS.
18. MARKER BOARD, PER SPECIFICATIONS
19. MECHANICAL GRILLE, PER MECHANICAL DWG'S.
20. LIGHT FIXTURE, PER ELECT. DWG'S.
21. PLUMBING FIXTURE. SEE PLUMBING DWG'S. & SPEC'S.
22. MIRROR. SEE SPEC'S.
23. OVERHEAD DOOR TRACK, PER DOOR SCHEDULE
24. L.E.D. DISPLAY
25. PEGBOARD
26. COUNTERTOP PER FINISH SCHEDULE
27. FIXED FILLER PANEL TO MATCH CABINETS/LOCKERS WHERE APPLICABLE
28. HOSE BIB BOX PER PLUMBING DWG'S
29. CEILING MOUNTED ADJUSTABLE BINOCULAR RAIL PER SPEC
30. STEEL COLUMN PER STRUCTURAL – PAINTED
31. ALUMINUM HANDRAIL / GUARDRAIL PER DETAILS & SPECS.
32. STEEL STAIR W/ CONCRETE TREADS
33. LOCKERS PER SPEC.
34. SHOWER DOOR PER SPEC.
35. TOILET & SHOWER PARTITIONS PER SPEC.
36. CONCRETE SEAT PER DETAIL 17/A5.2
37. MOP SINK MIXING VALVES, SEE PLUMBING
38. FIELD TILE – PER FINISH SCHEDULE. SEE 16/A5.5 (FOR SHOWER ELEVATION)
39. 1/2" ALUM. 'T' REVEAL REGLET BY 'FRYREGLET': TDM-TDM-625-75, WHERE GYPSUM BOARD MEETS CONCRETE WALL/CEILING, – DO NOT PAINT – SEE SEE DETAIL 20/A5.2
40. VERTICAL COUNTER SUPPORTS – SEE 2/A4.1 FOR SPACING & 1/A5.5
41. RECEPTION DESK PER DETAIL 15/A5.5
42. FIELD TILE PER FINISH SCHEDULE
43. UNDER COUNTER DISHWASHER PER SPECIFICATIONS. VERIFY DISHWASHER CLEARANCES
44. WALL MOUNTED ROOF ACCESS LADDER, SEE DETAIL 13/A5.1
45. BUILT-IN PLATFORM
46. WALL MOUNTED UTILITY SINK PER PLUMBING DWG'S.
47. MEDICAL PAC PROVIDED BY OWNER HANGING SYSTEM PROVIDED AND INSTALLED BY CONTRACTOR
48. EXPOSED MECHANICAL DUCT PER MECH. DWGS. – PAINT MATTE BLACK
49. PROVIDE (12) GALV. J-HOOKS FOR HANGING BUOYS – REFER TO OWNER FOR LAYOUT
50. SWIM FINS RACK – HORIZ. PIPE BARS, MOUNT TO CONC. WALL SEE 2/A4.3 & 5/A5.7
51. 2" DIA. GALV. PIPE FOR HANGING WET SUITS
52. CENTRIFUGAL DRYER BY OWNER
53. FULL HT. LOCKABLE CABINET FOR RADIOS & CHARGERS W/ (4) ADJ. SHELVING AND LOUVERED DOORS – SEE DTL. 7/A5.4 SIM.
54A. ELECTRICAL OUTLET FOR RADIO CHARGERS (PER ELEC.)
54B. ELECTRICAL OUTLET W/ CABLE TV (PER ELEC)
55. GYP. BD. SOFFIT
56. ICE MAKER PER SPEC
57. SEAMLESS STAINLESS STEEL SINK PER SPEC. HOOK-UP PER PER PLUMBING PLANS. ALSO SEE DETAIL 18/A5.5
58. STAINLESS STEEL BACKSPLASH TO UNDERSIDE OF UPPER CABINETS
59. 12"(D) x 48"(L) VINYL COATED OPEN WIRE SHELVING W/ BRACKET SUPPORTS
60. WALL RACK FOR RESCUE BOARDS, SEE DETAIL 2/A5.7
61. 12" HIGH WOOD FRAMED PLATFORM – SEE DETAIL 8 & 12/A5.7
62. CONCRETE PANEL JOINT LOCATION
63. ACCESSIBLE LOCKER (1 TIER): PROVIDE RECESS HANDLE W/ LIFTING TRIGGER HARDWARE

Notes

1. FOR RESTROOM #112: SEE DETAILS ON SHEET A5.0 FOR TYPICAL ACCESSIBILITY NOTES AND DETAIL 20/A5.0
2. SEE SHEET 14/A5.0 & 10/A5.0 FOR WALL AND DOOR SIGNAGE AT RESTROOMS.
3. SEE SHEET 8/A5.0 FOR GRAB BAR DETAIL.
4. SEE SHEET A4.1 FOR RESTROOM ACCESSORY LEGEND (–)

A-15

Dominy + Associates Architects @ domusstudio
2150 West Washington, Suite 303
San Diego, California 92110
Tel 619.692.9393
Fax 619.692.9394
domusstudio.com

SPEC. NO. 8147

LICENSED ARCHITECT WAYNE POLLOCK No. C12113 REN 9.30.15 STATE OF CALIFORNIA

PLANS FOR THE CONSTRUCTION OF

South Mission Beach Lifeguard Station

Enlarged Plan + Interior Elevations — A4.1

CITY OF SAN DIEGO, CALIFORNIA
ENGINEERING & CAPITAL PROJECTS
ARCHITECTURAL ENGINEERING & CONTRACTS DIVISION
SHEET 33 OF 94 SHEETS

WBS S-00791

APPROVED: _____ FOR CITY ENGINEER — DATE 10/13/2014

SUBMITTED BY: JIHAD SLEIMAN, PROJECT MANAGER

DESCRIPTION	BY	APPROVED	DATE	FILMED
ORIGINAL	WH/TT			

YOUSIF BENYAMIN, PROJECT ENGINEER

218-1693 CCS27 COORDINATES

1858-6253 CCS83 COORDINATES

CONTRACTOR _____ DATE STARTED _____
INSPECTOR _____ DATE COMPLETED _____

32849-33-D

Proprietary design: These drawings and design are protected by common law copyright. All patentable material contained herein and originating with Dominy + Associates Architects @ domusstudio LLP shall be the property of Dominy + Associates Architects @ domusstudio LLP

© COPYRIGHT October 13, 2014 at 8:05AM

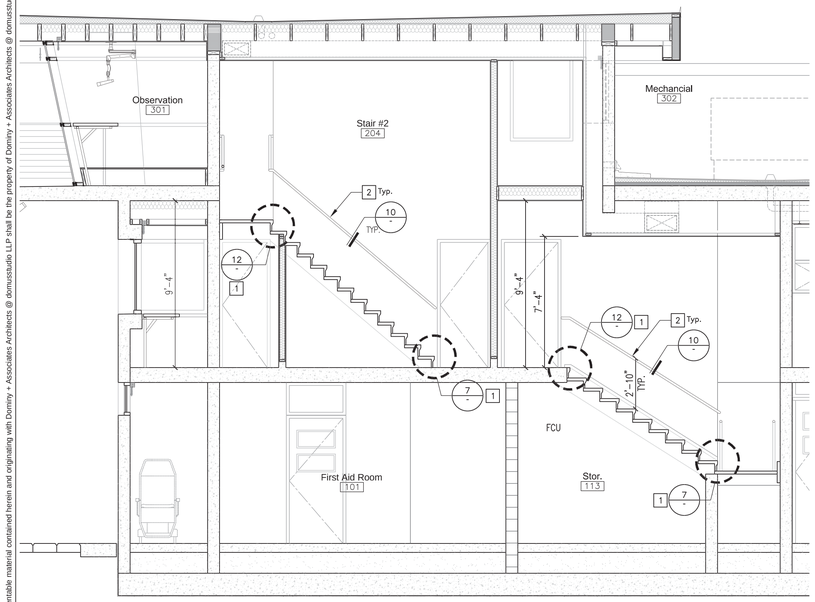

5 STAIR SECTION #2
1/4" = 1'-0"

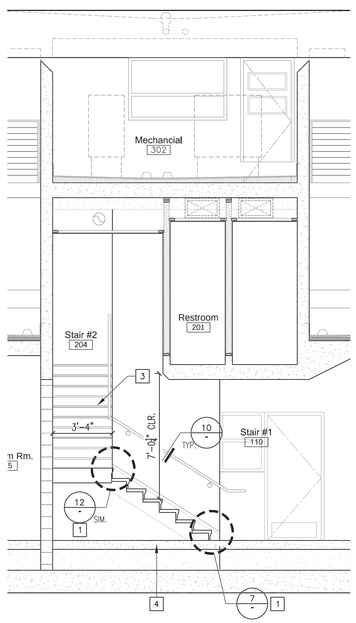

4 STAIR SECTION #1
1/4" = 1'-0"

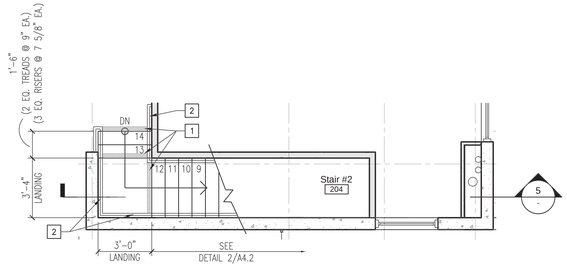

3 OBSERVATION LEVEL STAIR #2 PLAN
1/4" = 1'-0"

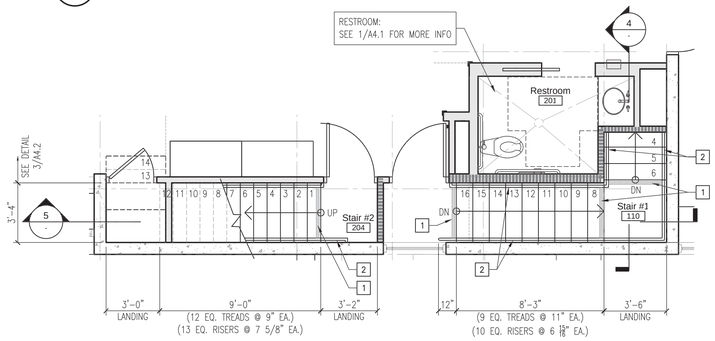

2 SECOND LEVEL FLOOR STAIR #1 AND #2 PLAN
1/4" = 1'-0"

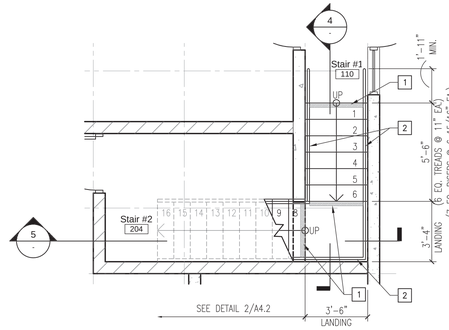

1 FIRST FLOOR STAIR #1
1/4" = 1'-0"

Stair Keyed Notes

1. 2" CONTRASTING STRIPE, TYP., SEE 7/A4.2 11/A4.2
2. CONTINUOUS 34–38" HIGH HANDRAIL, TYP., SEE 11/A4.2 10/A4.2
3. STAIR BEYOND
4. CONCRETE SLAB OVER SAND BASE OVER MAT FOUNDATION – SEE STRUCT.

Stair Notes

1. FOR GENENERAL STAIR REQUIREMENTS, SEE DETAIL **11/A4.2**
2. HANDRAILS ARE TO BE PROVIDED ON EACH SIDE OF THE STAIRS, PER SECTION 1003.3.3.6A. EXCEPTION: PRIVATE STAIRWAYS 30" OR LESS IN HEIGHT MAY HAVE HANDRAILS ON ONE SIDE ONLY.
3. HANDRAILS ARE TO BE LOCATED ≥34" BUT ≤38" ABOVE NOSING OF TREADS, PER SECTION 1133B.4.2.1.
4. HANDRAILS SHALL EXTEND A MINIMUM ≥12" BEYOND TOP NOSING, AND MINIMUM ≥12"–PLUS–TREAD–WIDTH BEYOND THE BOTTOM NOSING, PER SECTION 1133B.4.2.2.
5. PER SECTION 1006.9.2.6A, THAT THE HANDGRIP PORTIONS OF HANDRAILS ARE:
   A) ≥1–1/4" AND ≤1–1/2" IN CROSS SECTIONAL DIMENSION.
   B) THE SHAPE MAY PROVIDE AN EQUIVALENT GRIPPING SURFACE.
   C) THE HANDGRIP PORTION SHALL HAVE A SMOOTH SURFACE, WITHOUT ANY HARP CORNERS.
6. STAIR TREADS SHALL BE NO LESS THAT 11" DEEP, MEASURED FROM RISER TO RISER. SECTION 1133B.4.5.3. THIS APPLIES EVEN IF BASIC UBC PROVISIONS MAY ALLOW A NARROWER TREAD.
7. THE INTERIOR STAIR TREADS ARE MARKED AT THE UPPER APPROACH AND THE LOWER TREAD OF EACH STAIR, BY A STRIP OF CLEARLY CONTRASTING COLOR, PER SECTION 1133B.4.4, AS FOLLOWS:
   A) AT LEAST 2" WIDE (BUT NOT MORE THAN 4" WIDE),
   B) PLACED PARALLEL TO AND NOT MORE THAN 1" FROM THE NOSE OF THE STEP OR LANDING.
   C) THE STRIP SHALL BE AS SLIP RESISTANT AS THE OTHER TREADS OF THE STAIR.
8. ALL TREAD SURFACES COMPLY WITH SECTION 1133B.4.5, AS FOLLOWS:
   A) STAIR TREADS SHALL BE NO LESS THAN 11" DEEP, MEASURED FROM RISER TO RISER.
   B) BE SLIP RESISTANT.
   C) HAVE SMOOTH, ROUNDED, OR CHAMFERED EXPOSED EDGES.
   D) HAVE NO ABRUPT EDGES AT THE NOSING. OPEN RISERS ARE NOT PERMITTED.
   E) NOSING SHALL NOT PROJECT ≥1–1/2" PAST THE FACE OF THE RISER ABOVE.
9. MIN. HEAD ROOM CLEARANCE OF 6'–8" FOR STAIRWAYS, MEASURED TANGENT TO TREAD NOSING.

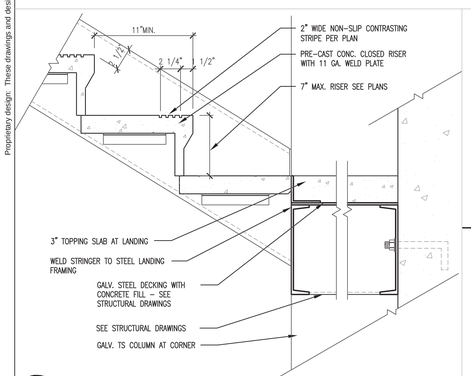

8 TREAD AND RISER DETAIL AT DECK
1 1/2"= 1'–0""

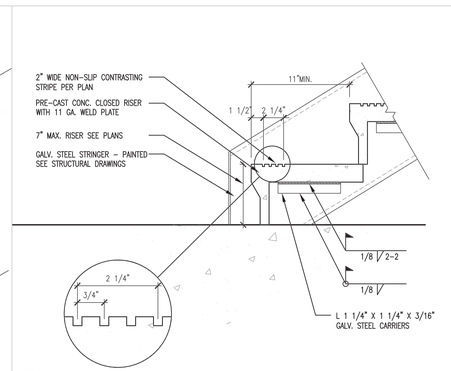

7 TREAD AND RISER DETAIL
1 1/2"= 1'–0""

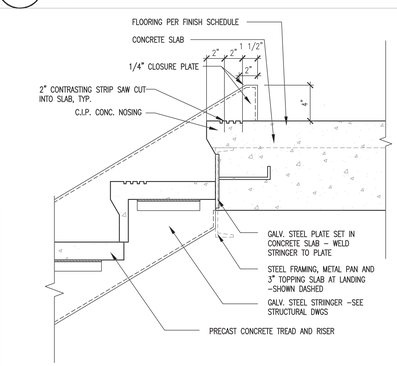

12 TREAD AND RISER DETAIL
1 1/2"= 1'–0""

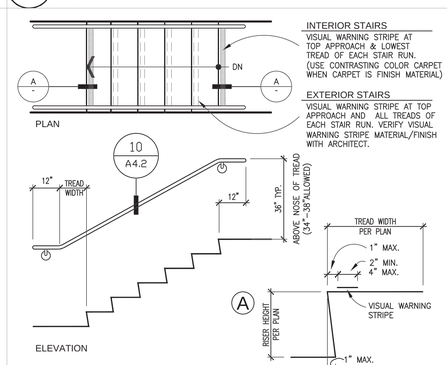

WALL MOUNTED
11 STAIR HANDRAIL AND STRIPING - TYP.
3/8"= 1'–0" 05520–02

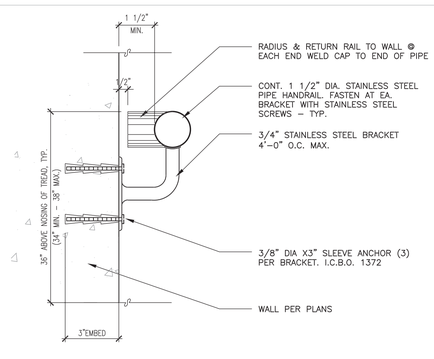

10 HANDRAIL @ WALL SIDE (EXTERIOR / INTERIOR)
3"= 1'–0" HANDRAIL AT CONCWALL

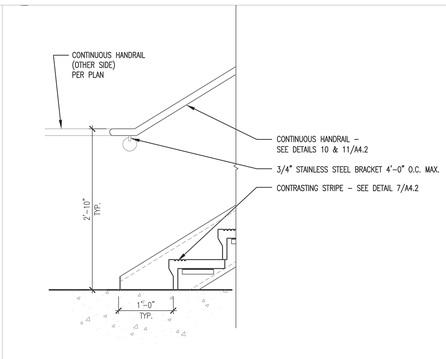

9 HANDRAIL AT LANDING
3/4"= 1'–0""

A-16

Dominy + Associates Architects @ domusstudio
2150 West Washington, Suite 303
San Diego, California 92110
Tel 619.692.9393
Fax 619.692.9394
domusstudio.com

SPEC. NO. 8147

LICENSED ARCHITECT — REGISTRATION EXPIRATION DATE — No. C12113 — REN 9.30.15 — STATE OF CALIFORNIA

PLANS FOR THE CONSTRUCTION OF

South Mission Beach Lifeguard Station

Stair Plans and Sections — A4.2

CITY OF SAN DIEGO, CALIFORNIA
ENGINEERING & CAPITAL PROJECTS
ARCHITECTURAL ENGINEERING & CONTRACTS DIVISION
SHEET 34 OF 94 SHEETS

WBS S-00791

APPROVED: FOR CITY ENGINEER — DATE 10/13/2014

SUBMITTED BY: JIHAD SLEIMAN, PROJECT MANAGER

DESCRIPTION	BY	APPROVED	DATE	FILMED
ORIGINAL	WH/TT			

YOUSIF BENYAMIN, PROJECT ENGINEER
218–1693
CCS27 COORDINATES
1858–6253
CCS83 COORDINATES

CONTRACTOR _____ DATE STARTED _____
INSPECTOR _____ DATE COMPLETED _____

32849–34–D

Proprietary design. These drawings and design are protected by common law copyright. All patentable material contained herein and originating with Dominy + Associates Architects @ domusstudio LLP shall be the property of Dominy + Associates Architects @ domusstudio LLP
© COPYRIGHT October 13, 2014 at 8:07AM

Proprietary design. These drawings and design are protected by common law copyright. All patentable material contained herein and originating with Dominy + Associates Architects @ domusstudio LLP shall be the property of Dominy + Associates Architects @ domusstudio LLP

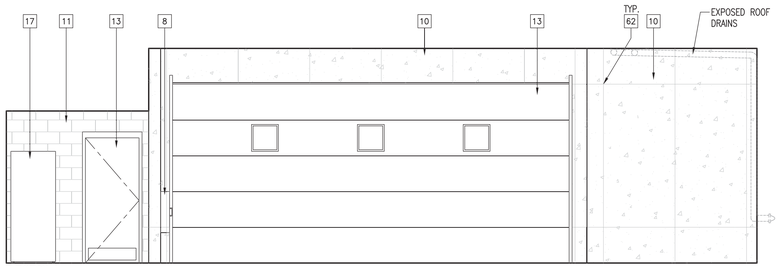

ELEVATION A

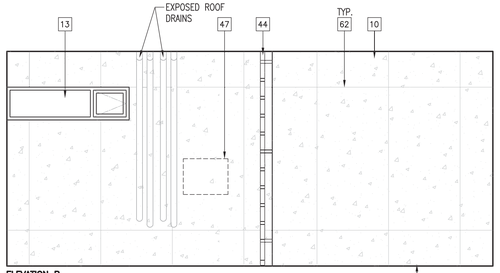

ELEVATION B

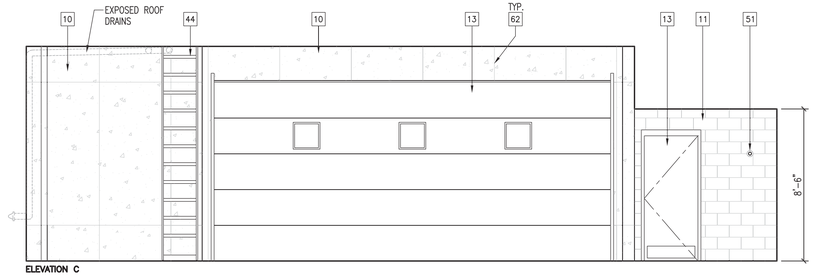

ELEVATION C

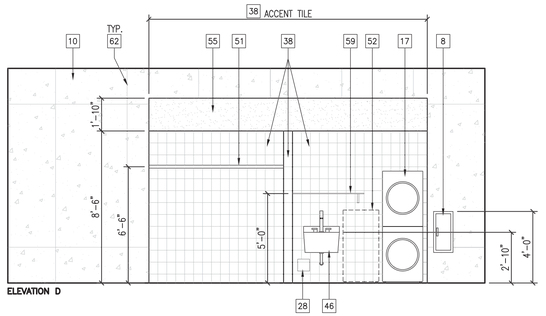

ELEVATION D

1 Rescue Vehicles 105 / Storage 106 / Storage 107
1/4" = 1'-0"

Int. Elevation Keyed Notes

1. BUILT–IN CABINETS PER DETAILS **13/A5.5 & 14/A5.5,** FOR FULL HT. CAB SEE DETAIL **7/A5.4**
2. PANTRY STORAGE
3. ADJUSTABLE SHELVES. TYP.
4. SLIDE IN ELECTRIC RANGE
5. TYPE II HOOD/MICROWAVE (400 CFM) PER SPECIFICATIONS. ROUTE HOOD EXHAUST THRU WALL. SEE MECHANICAL PLANS AND HOOD MANUFACTURER'S RECOMMENDATIONS
6. 4" KICK SPACE
7. END PANEL TO MATCH CABINET FRONTS
8. FIRE EXTINGUISHER LOCATION: SURFACE MOUNTED. REFER TO SPECS. FOR F.E., ALSO SEE DETAIL **2/A5.4** FOR RECESS MOUNTED (PER PLAN)
9. GYPSUM WALL BOARD PER FINISH SCHEDULE
10. CAST IN PLACE CONCRETE – SAND BLAST TEXTURED FINISHED PER SPEC.
11. MASONRY WALL, SEALED, TYP.– PER FINISH SCHEDULE & SPECS.
12. WORK COUNTER – SEE DETAILS ON SHEET **A5.5**
13. WINDOW / DOOR PER SCHEDULES
14. BREAK METAL
15. REFRIGERATORS PER SPEC.
16. BUILT–IN DESK – SEE **5/A5.5 SIM**
17. ELECTRIC WASHER & DRYER, PROVIDE POWER. SEE SPECS & PLUMBING DWG'S. FOR HOOK–UP REQUIREMENTS.
18. MARKER BOARD, PER SPECIFICATIONS
19. MECHANICAL GRILLE, PER MECHANICAL DWG'S.
20. LIGHT FIXTURE, PER ELECT. DWG'S.
21. PLUMBING FIXTURE. SEE PLUMBING DWG'S. & SPEC'S.
22. MIRROR. SEE SPEC'S.
23. OVERHEAD DOOR TRACK, PER DOOR SCHEDULE
24. L.E.D. DISPLAY
25. PEGBOARD
26. COUNTERTOP PER FINISH SCHEDULE
27. FIXED FILLER PANEL TO MATCH CABINETS/LOCKERS WHERE APPLICABLE
28. HOSE BIB BOX PER PLUMBING DWG'S
29. CEILING MOUNTED ADJUSTABLE BINOCULAR RAIL PER SPEC
30. STEEL COLUMN PER STRUCTURAL – PAINTED
31. ALUMINUM HANDRAIL / GUARDRAIL PER DETAILS & SPECS.
32. STEEL STAIR W/ CONCRETE TREADS
33. LOCKERS PER SPEC.
34. SHOWER DOOR PER SPEC.
35. TOILET & SHOWER PARTITIONS PER SPEC.
36. CONCRETE SEAT PER DETAIL **17/A5.2**
37. MOP SINK MIXING VALVES, SEE PLUMBING
38. FIELD TILE – PER FINISH SCHEDULE. SEE **16/A5.5** (FOR SHOWER ELEVATION)
39. 1/2" ALUM. 'T' REVEAL REGLET BY 'FRYREGLET': TDM–TDM–625–75, WHERE GYPSUM BOARD MEETS CONCRETE WALL/CEILING. – DO NOT PAINT – SEE DETAIL 20/A5.2
40. VERTICAL COUNTER SUPPORTS – SEE **2/A4.1** FOR SPACING & **1/A5.5**
41. RECEPTION DESK PER DETAIL **15/A5.5**
42. FIELD TILE PER FINISH SCHEDULE
43. UNDER COUNTER DISHWASHER PER SPECIFICATIONS. VERIFY DISHWASHER CLEARANCES
44. WALL MOUNTED ROOF ACCESS LADDER, SEE DETAIL **13/A5.1**
45. BUILT–IN PLATFORM
46. WALL MOUNTED UTILITY SINK PER PLUMBING DWG'S.
47. MEDICAL PAC PROVIDED BY OWNER HANGING SYSTEM PROVIDED AND INSTALLED BY CONTRACTOR
48. EXPOSED MECHANICAL DUCT PER MECH. DWGS. – PAINT MATTE BLACK
49. PROVIDE (12) GALV. J–HOOKS FOR HANGING BUOYS – REFER TO OWNER FOR LAYOUT
50. SWIM FINS RACK – HORIZ. PIPE BARS, MOUNT TO CONC. WALL SEE **2/A4.3** & **5/A5.7**
51. 2" DIA. GALV. PIPE FOR HANGING WET SUITS
52. CENTRIFUGAL DRYER BY OWNER
53. FULL HT. LOCKABLE CABINET FOR RADIOS & CHARGERS W/ (4) ADJ. SHELVING AND LOUVERED DOORS SEE DTL. **7/A5.4 SIM.**
54. ELECTRICAL OUTLET FOR RADIO CHARGERS (PER ELEC.)
54. ELECTRICAL OUTLET W/ CABLE TV (PER ELEC)
55. GYP. BD. SOFFIT
56. ICE MAKER PER SPEC
57. SEAMLESS STAINLESS STEEL SINK PER SPEC. HOOK–UP PER PER PLUMBING PLANS. ALSO SEE DETAIL **18/A5.5**
58. STAINLESS STEEL BACKSPLASH TO UNDERSIDE OF UPPER CABINETS
59. 12"(D) x 48"(L) VINYL COATED OPEN WIRE SHELVING W/ BRACKET SUPPORTS
60. WALL RACK FOR RESCUE BOARDS, SEE DETAIL **2/A5.7**
61. 12" HIGH WOOD FRAMED PLATFORM – SEE DETAIL **8 & 12/A5.7**
62. CONCRETE PANEL JOINT LOCATION
63. ACCESSIBLE LOCKER (1 TIER): PROVIDE RECESS HANDLE W/ LIFTING TRIGGER HARDWARE

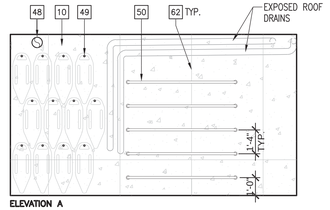

ELEVATION A

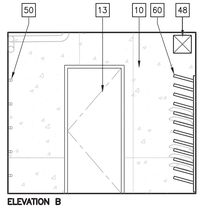

ELEVATION B

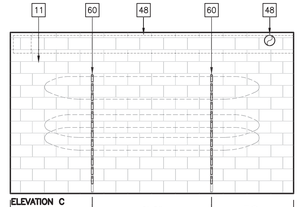

ELEVATION C

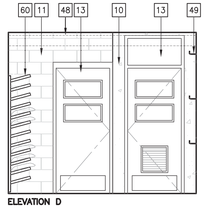

ELEVATION D

2 Board & Buoy Storage 114
1/4" = 1'-0"

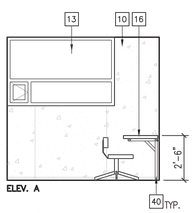

ELEV. A

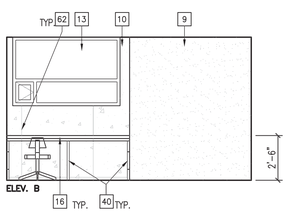

ELEV. B

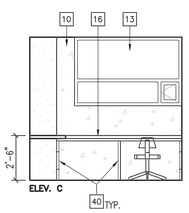

ELEV. C

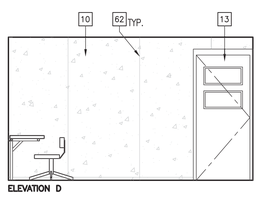

ELEVATION D

3 Admin. 202
3/4" = 1'-0"

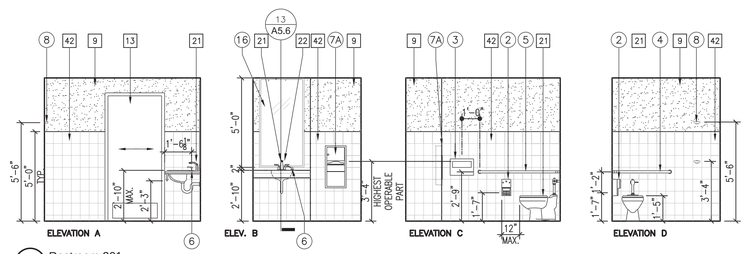

ELEVATION A ELEV. B ELEVATION C ELEVATION D

4 Restroom 201
1/4" = 1'-0"

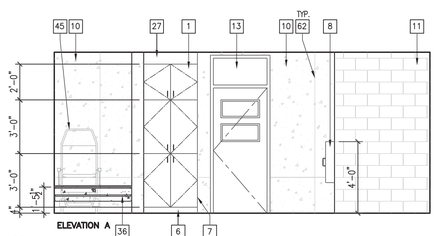

ELEVATION A

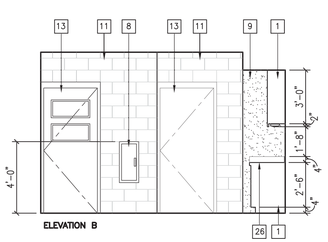

ELEVATION B

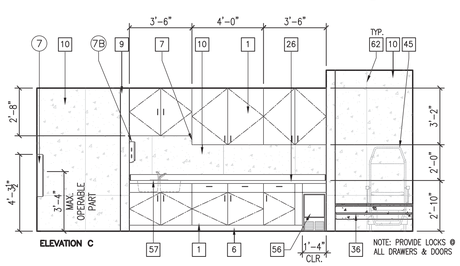

ELEVATION C

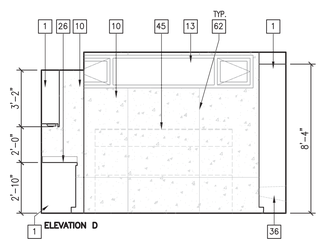

ELEVATION D

5 First Aid Room 101
1" = 1'-0"

© COPYRIGHT October 13, 2014 at 8:08AM

A-17

Dominy + Associates Architects @ domusstudio
2150 West Washington, Suite 303
San Diego, California 92110
Tel 619.692.9393
Fax 619.692.9394
domusstudio.com

SPEC. NO. 8147

LICENSED ARCHITECT JOSEPH POWELL DOMINY No. C12113 REN 9.30.15 STATE OF CALIFORNIA

PLANS FOR THE CONSTRUCTION OF

South Mission Beach Lifeguard Station

Interior Elevations — A4.3

CITY OF SAN DIEGO, CALIFORNIA
ENGINEERING & CAPITAL PROJECTS
ARCHITECTURAL ENGINEERING & CONTRACTS DIVISION
SHEET 35 OF 94 SHEETS

APPROVED: _____ FOR CITY ENGINEER — DATE: 10/13/2014

DESCRIPTION	BY	APPROVED	DATE	FILMED
ORIGINAL	WH/TT			

CONTRACTOR _____ DATE STARTED _____
INSPECTOR _____ DATE COMPLETED _____

WBS S-00791

SUBMITTED BY: JIHAD SLEIMAN — PROJECT MANAGER

YOUSIF BENYAMIN — PROJECT ENGINEER

218–1693 CCS27 COORDINATES

1858–6253 CCS83 COORDINATES

32849–35–D

Proprietary design: These drawings and design are protected by common law copyright. All patentable material contained herein and originating with Dominy + Associates Architects @ domusstudio LLP shall be the property of Dominy + Associates Architects @ domusstudio LLP

FRONT APPROACH - FIGS. 11B-26A AND 11B-33

17 Level Maneuvering Clearance at Doors
3/8"= 1'-0"

NOTE:
–THE SIGN SHALL BE PER CITY STANDARD SDM–117

PARKING SIGNS:

1. POST MOUNTED SIGNS, SEE M–45 FOR BREAK–AWAY SIGN POST
2. SIGN SHALL BE CONSTRUCTED OF A MINIMUM 1/16" THICK ALUMINUM
3. COLORS: BORDER, TEXT, AND SYMBOL – WHITE (RETROREFLECTIVE) BACKROUND – BLUE (RETROREFLECTIVE)
4. FONT SANS–SERIF CLEARVIEW

13 AUTHORIZED VEHICLE PARKING SIGN
NTS

TYPE C:

– "UNISEX": MALE / FEMALE PICTORAL, SHAPE: ROUND WITH TRIANGLE INTERIOR

TYPE E:

- "UNISEX" WITH BRAILLE AND HANDICAP SYMBOL
- "EXIT" SIGNS WITH BRAILLE
- "EXIT ROUTE" SIGNS WITH BRAILLE
- "EXIT STAIR DOWN" SIGNS WITH BRAILLE
- "COMMUNICATION ROOM" SIGNS WITH BRAILLE
- "SHOWER" WITH BRAILLE AND HANDICAP SYMBOL

SEE BELOW FOR SIGN CONSTRUCTION

1. 70" SQ. ACCESSIBILITY SIGN SEE DETAIL 11 THIS SHEET.
2. PEDESTRIAN ROUTE. 5% MAX. SLOPE CROSS SLOPE 1/4":1' MAX.
3. WHEEL STOP, SEE DETAIL 15/A5.0
4. ACCESS AISLE: 5'–0" MIN. AT TYP. ACCESSIBLE PARKING STALL 8'–0" MIN. AT VAN ACCESSIBLE PARKING STALL.
   NOTE: MUST BE LOCATED ON PASSENGER SIDE – WHEN ONLY ONE ACCESSIBLE SPACE IS PROVIDED IT MUST BE MADE VAN ACCESSIBLE – 'NO PARKING' SHALL BE PAINTED ON THE GROUND IN LETTERS NO LESS THAN 12 INCHES HIGH PER Sec. 1129B.4.1 & 4.2
5. STRIPES AT 36" O.C.
6. 2% MAX. SURFACE SLOPE IN ANY DIRECTION.
7. TYP. PAVEMENT SYMBOL SEE. DTL. 2 THIS SHEET
8. WITHIN THE ACCESS AISLE PAINT THE WORDS 'NO PARKING' IN 12" HIGH LETTERS MIN.
9. CURB
10. RAMP PER PLAN
11. DETECTABLE WARNING PER CITY OF SAN DIEGO STANDARD DRAWING G–30

1 ACCESSIBLE PARKING STALL
1/8"= 1'-0"" 02580–01

WALKING PARALLEL - FIG. 11B-7A

OBJECTS ON POSTS / PYLONS - FIG. 11B-7B

18 Protruding Objects
3/8"= 1'-0"

14 BRAILLE SIGNAGE
N.T.S. 10400–02

SIGN CONSTRUCTION:

1. Substrate: 1/4" black matt acrylic
2. Face: laminate per specification section 09 06 00
3. Pictoral/lettering (graphic art): 1/32" applique. color per specification section 09 06 00
4. Lettering height: 5/8" tall typical u.o.n.
5. Lettering font: sans serif
6. Attach signs to door with 3m vbh heavy duty double–sided mounting tap.
7. Mount signs at 60" a.f.f. to center of sign.
8. Edges of signs shall be eased and corners rounded with 1/8" radius.
9. For additional info see "general accessibility notes," "signage" on sheet A/5.0.

LETTERING HEIGHT:

TYPE E: 5/8" TALL
TYPE F: 1" TALL
TYPE G: 1/2" TALL

TYPE F:

– "THIS DOOR TO REMAIN UNLOCKED WHEN BUILDING IS OCCUPIED"

WALL TACTILE SIGNS

NOTE:
CONTRACTOR TO PROVIDE SUBMITTALS FOR APPROVAL

10 Signage
1 1/2"= 1'-0"

5"x5" SITE ACCESSIBILITY SIGN WITH THE INTERNATIONAL SYMBOL OF ACCESSIBILITY.

1–1/4" DIAMETER GALV. PIPE SET IN 12" DIA. CONCRETE PIER 18" BELOW GRADE. SEE DTL 5, THIS SHEET.

BLUE BACKGROUND EQUAL TO COLOR No.15090 IN FEDERAL STANDARD 595B.

5"x5" BRUSH STEEL PLASTIC LAMINATE OR EQUIVALENT. (VERIFY MAT'L. WITH ARCHITECT)

BLACK PROFILE

DIRECTIONAL SYMBOL WHERE NEEDED.

FINISH GRADE

6 SITE ACCESSIBILITY SIGN
1 1/2"= 1'-0" 10400–08

TRUNCATED DOMES PER CITY OF SAN DIEGO STANDARD DRAWING G–30

PROFILE VIEW OF WHEELCHAIR WITH OCCUPANT, PAINTED WHITE. THE PROFILE VIEW SHALL BE LOCATED SO THAT IT IS VISIBLE TO A TRAFFIC ENFORCEMENT OFFICER WHEN A VEHICLE IS PROPERLY PARKED IN THE SPACE. (PER CBC Sec. 1129B.5)

2" WIDE BORDER. PAINTED WHITE

BACKGROUND. PAINTED BLUE (TO MATCH COLOR No. 15090 IN FEDERAL STD. 595B)

2 ACCESSIBLE PARKING SYMBOL
3/4"= 1'-0" 02580–03

ADA COMPLIANT LOCKERS

Handicap accessibility for lockers is based on 2 main factors: handle operation and reach limitations.
REACH: Bottom, handle and hook locations conform to required dimensions as shown bottom right. Bottom height may be no lower than 9" off the floor for parallel reach requirement. The 15" forward reach requirement does not have to apply to lockers.
HANDLE: ADA handles must be operable with one hand and not require tight pinching, grasping, twisting of the wrist or more than 5 lbs. of force to operate. The acid test for an acceptable handle is if it can be operated with a fist. As shown below, our handle provides sufficient room for a large fist to raise the lifting trigger that opens the door. The lifting trigger is curved (and textured) at the bottom so the top finger of a fist will not slip off while opening the door.

THIS ARRANGEMENT CONFORMS WITH THE FOLLOWING CODES
ADA 4.2.6
ADA 4.25.3, 4
ADA 4.27.4
CA T24 1117B.6.4
CA T24 1118B.6
CA T24 1125B.3, 4
CA DSA Access Regulation 1127A.6, and 1127A.9

19 ACCESSBILE LOCKERS
NTS

(1) #4 HORIZ. BAR FULL LENGTH W/ 1 1/2" CONC. COVER ALL EDGES AND ENDS

EPOXY ADHESIVE

PAVING PER PLANS

5/8"ø X 18"L STEEL PIN @ EACH END OF CONCRETE WHEEL STOP, TYP. FLUSH TOP WITH WHEEL STOP

5/8"ø STEEL PIN

PRECAST CONCRETE WHEEL STOP

15 Precast Wheel Stop
1"= 1'-0""

NOTE:
–THE SIGN SHALL BE PER CITY STANDARD SDM–117

PARKING SIGNS:

1. POST MOUNTED SIGNS, SEE M–45 FOR BREAK–AWAY SIGN POST
2. SIGN SHALL BE CONSTRUCTED OF A MINIMUM 1/16" THICK ALUMINUM
3. COLORS: BORDER, TEXT, AND SYMBOL – WHITE (RETROREFLECTIVE) BACKROUND – BLUE (RETROREFLECTIVE)
4. FONT SANS–SERIF CLEARVIEW

11 ACCESSIBLE PARKING SIGN
NTS

COLORED BLACK OR BLUE SYMBOL

5"x5" BUILDING ENTRANCE ACCESSIBILITY SIGN. BACKGROUND TO BE BRUSH ALUMINUM PLASTIC LAMINATE. (VERIFY COLOR WITH ARCHITECT.)

PROVIDE SIGNS MOUNTED ON GLASS WITH BLANK TO MATCH, ON OPPOSITE SIDE OF GLASS, TO HIDE GLUE MARKS.

GRADE 2 BRAILLE PER GENERAL ACCESSIBILITY SIGN NOTE 5. TYP.

SEE FLOOR PLANS FOR LOCATIONS

7 BLD'G ENTRANCE ACCESSIBILITY SIGN
6"= 1'-0" 10400–03

*** FOR ACCESSIBILITY NOTES - SEE SHEET A5.01 ***

***FLOOR TO BE SLIP RESISTANT W/ MAX. SLOPE = 1.5% IN ANY DIRECTION

CONTRACTOR TO VERIFY CLEARANCES w/ SPECIFIED FIXTURES

SIDE ELEVATION

SINGLE OCCUPANCY TOILET

20 ACCESSIBLE TOILET ROOM / STALL
1/4"= 1'-0"" 10800–01

NOTE:
ALL BOLLARDS SHALL BE PLUMB, VERTICALLY

5" O.D. STD. STEEL GALV. PIPE WITH STEEL GALV. CAP, U.N.O. (MIN. 1/4" WALL THICKNESS) PRIME AND PAINT - COLOR: YELLOW. (AT NON-REMOVABLE LOCATIONS, FILL BOLLARD WITH CONCRETE)

2" STEEL LOCKABLE LOOP. WELD UPRIGHT TO SLEEVE.

NEW OR EXISTING FINISH GRADE / HARDSCAPE PER SITE AND LANDSCAPE PLANS. SAWCUT AND REPAIR AS REQ'D TO MATCH ADJ. SURFACE.

STEEL GALV. SLEEVE SET IN CONC. FOUNDATION

16 REMOVABLE BOLLARD
1/2"= 1'-0"

NOTE:
–THE SIGN SHALL BE PER CITY STANDARD SDM–117

–THIS SIGN SHALL BE POSTED IN A CONSPICUOUS PLACE AT EACH ENTRANCE TO OFF–STREET PARKING FACILITIES, OR IMMEDIATELY TO AND VISIBLE FROM EACH STALL OR SPACE. (SEE SITE PLAN FOR LOCATION).

BLANK SPACES ARE TO BE FILLED IN WITH APPROPRIATE INFORMATION AS A PERMANENT PART OF THE SIGN AT THE TIME OF FINAL INSPECTION

POST MOUNTED SIGNS, SEE M–45 FOR BREAK–AWAY SIGN POST

12 OFF STREET PARKING SIGN
NTS

8 RESTROOM GRAB BAR
3"= 1'-0" 10800–05

A-18

Dominy + Associates Architects @ domusstudio
2150 West Washington, Suite 303
San Diego, California 92110

Tel 619.692.9393
Fax 619.692.9394
domusstudio.com

SPEC. NO. 8147

LICENSED ARCHITECT WAYNE HOLTAN No. C12113 REN 9.30.15 STATE OF CALIFORNIA

PLANS FOR THE CONSTRUCTION OF

South Mission Beach Lifeguard Station

Accessible Details	A5.0

CITY OF SAN DIEGO, CALIFORNIA
ENGINEERING & CAPITAL PROJECTS
ARCHITECTURAL ENGINEERING & CONTRACTS DIVISION
SHEET 36 OF 94 SHEETS

WBS S-00791

APPROVED: FOR CITY ENGINEER — DATE 10/13/2014

SUBMITTED BY: JIHAD SLEIMAN, PROJECT MANAGER

DESCRIPTION	BY	APPROVED	DATE	FILMED
ORIGINAL	WH/TT			

YOUSIF BENYAMIN
PROJECT ENGINEER
218–1693
CCS27 COORDINATES
1858–6253
CCS83 COORDINATES

CONTRACTOR ________ DATE STARTED ________
INSPECTOR ________ DATE COMPLETED ________

32849–36–D

© COPYRIGHT October 13, 2014 at 8:10AM

Entrances and Exterior Ground Floor Exit Doors

1. ALL ENTRANCES AND EXTERIOR GROUND FLOOR EXIT DOORS TO BUILDINGS AND FACILITIES SHALL BE MADE ACCESSIBLE TO PERSONS WITH DISABILITIES. SUCH ENTRANCES SHALL BE CONNECTED BY AN ACCESSIBLE ROUTE (COMPLYING WITH SEC. 1114B.1.2) TO PUBLIC TRANSPORTATION STOPS, TO ACCESSIBLE PARKING AND PASSENGER LOADING ZONES AND TO PUBLIC STREETS OR SIDEWALKS, IF AVAILABLE. (CBC SEC. 1133B.1.1.1.1)

2. ENTRANCES SHALL BE CONNECTED BY AN ACCESSIBLE ROUTE TO ALL ACCESSIBLE SPACES OR ELEMENTS WITHIN THE BUILDING OR FACILITY. DOORWAYS SHALL HAVE A MINIMUM CLEAR OPENING OF 32" WITH THE DOOR OPEN 90 DEGREES, MEASURED BETWEEN THE FACE OF THE DOOR AND THE OPPOSITE STOP. OPENINGS MORE THAN 24" IN DEPTH SHALL COMPLY WITH SEC. 1118B.1. (CBC SEC. 1133B.1.1.1.1)
   EXCEPTIONS:
   a. EXTERIOR GROUND-FLOOR EXITS SERVING SMOKE PROOF ENCLOSURES, STAIRWELLS AND EXIT DOORS SERVICING STAIRS ONLY NEED NOT BE MADE ACCESSIBLE.
   b. EXITS IN EXCESS OF THOSE REQUIRED BY CHAPTER 10, AND WHICH ARE MORE THAN 24" ABOVE GRADE ARE NOT REQUIRED TO BE ACCESSIBLE. SUCH DOORS SHALL HAVE SIGNS WARNING THAT THEY ARE NOT ACCESSIBLE. WARNING SIGNS SHALL COMPLY WITH SEC. 1117B.5.1, ITEM 2.

Floor and Levels

1. IN BUILDINGS AND FACILITIES, FLOORS OF A GIVEN STORY SHALL BE A COMMON LEVEL THROUGHOUT, OR SHALL BE CONNECTED BY PEDESTRIAN RAMPS, PASSENGER ELEVATORS OR PLATFORM (WHEELCHAIR) LIFTS. (CBC SEC. 1120B.1)

2. GROUND AND FLOOR SURFACES ALONG ACCESSIBLE ROUTES AND IN ACCESSIBLE ROOMS AND SPACES, INCLUDING FLOORS, WALKS, RAMPS, STAIRS AND CURB RAMPS, SHALL BE STABLE, FIRM, SLIP RESISTANT AND SHALL COMPLY WITH 1124B (CBC SEC. 1124B.1)

Walks and Sidewalks

1. WALKS AND SIDEWALKS SHALL HAVE A CONTINUOUS COMMON SURFACE, NOT BE INTERRUPTED BY STEPS OR BY ABRUPT CHANGES IN LEVEL EXCEEDING 1/2", AND SHALL BE A MINIMUM OF 48" IN WIDTH. (CBC SEC. 1133B.7.1)

2. IF A WALK OR SIDEWALK HAS A LESS THAN 60" CLEAR WIDTH, THEN PASSING SPACES AT LEAST 60"X60" SHALL BE LOCATED AT REASONABLE INTERVALS NOT TO EXCEED 200'-0". A T-INTERSECTION IS AN ACCEPTABLE PASSING PLACE. (CBC SEC. 1133B.7.1)

3. CHANGES IN LEVEL UP TO 1/4" MAY BE VERTICAL AND WITHOUT EDGE TREATMENT. CHANGES IN LEVEL BETWEEN 1/4" AND 1/2" SHALL BE BEVELED WITH A SLOPE NO GREATER THAN 1:2. CHANGES IN LEVEL GREATER THAN 1/2" SHALL BE ACCOMPLISHED BY MEANS OF CURB RAMP, RAMP, ELEVATOR OR PLATFORM LIFT THAT COMPLIES WITH SEC. 1127B.5, 1133B.5, 1116B.1, 1116B.2. (CBC SEC. 1133B.7.4, 1124B.2)

4. SURFACES WITH A SLOPE OF LESS THAN 6% GRADIENT SHALL BE AT LEAST AS SLIP RESISTANT AS THAT DESCRIBED AS A MEDIUM SALTED FINISH. SLOPES GREATER THAN A 6% GRADIENT SHALL BE SLIP RESISTANT. (CBC SEC. 1133B.7.1.1, 1133B.7.1.2)

5. SURFACE CROSS SLOPES SHALL NOT EXCEED 1:50 (2% SLOPE). (CBC SEC. 1133B.7.1.3)

6. WALKS, SIDEWALKS, AND PEDESTRIAN WAYS SHALL BE FREE OF GRATINGS WHENEVER POSSIBLE. FOR GRATINGS LOCATED IN THE SURFACE OF ANY OF THESE AREAS, GRID OPENINGS IN THE GRATINGS SHALL BE LIMITED TO 1/2" IN THE DIRECTION OF TRAFFIC FLOW. (CBC SEC. 1133B.7.2)

7. WHEN THE SLOPE IN THE DIRECTION OF TRAVEL OF ANY WALK EXCEEDS 1 VERTICAL TO 20 HORIZONTAL (5% GRADIENT), IT SHALL COMPLY WITH THE PROVISIONS OF SEC. 1133B.5. (CBC SEC. 1133B.7.3)

8. ALL WALKS WITH CONTINUOUS GRADIENTS SHALL HAVE LEVEL AREAS AT LEAST 5'-0" IN LENGTH AT INTERVALS OF AT LEAST EVERY 400'. (CBC SEC. 1133B.7.5)

Hazards

1. ABRUPT CHANGES IN LEVEL, EXCEPT BETWEEN A WALK OR SIDEWALK AND AN ADJACENT STREET OR DRIVEWAY, EXCEEDING 4" IN A VERTICAL DIMENSION, SUCH AS PLANTERS OR FOUNTAINS LOCATED IN OR ADJACENT TO WALKS, SIDEWALKS OR OTHER PEDESTRIAN WAYS, SHALL BE IDENTIFIED BY CURBS PROJECTING AT LEAST 6" IN HEIGHT ABOVE THE WALK OR SIDEWALK SURFACE. WHEN A GUARD OR HANDRAIL IS PROVIDED, NO CURB IS REQUIRED WHEN A GUIDE RAIL IS PROVIDED 3" (+1") ABOVE THE SURFACE OF THE WALK OR SIDEWALK, THE WALK IS 5% OR LESS GRADIENT OR NO ADJACENT HAZARD EXISTS . (CBC SEC. 1133B.8.1)

2. ANY OBSTRUCTION THAT OVERHANGS A PEDESTRIAN WAY (INCLUDING WALKS, HALLS, CORRIDORS, PASSAGEWAYS, AISLES, OR OTHER CIRCULATION SPACES) SHALL HAVE A MINIMUM 80" ABOVE THE WALKING SURFACE AS MEASURED FROM THE BOTTOM OF THE OBSTRUCTION. IF VERTICAL CLEARANCE OF AN AREA ADJOINING AN ACCESSIBLE ROUTE IS REDUCED TO LESS THAN 80" (NOMINAL DIMENSION), A BARRIER TO WARN THE BLIND OR VISUALLY IMPAIRED PERSONS SHALL BE PROVIDED. (CBC SEC. 1133B.8.2, 1133B.8.6.2))

3. OBJECTS PROTRUDING FROM WALLS, WITH THEIR LEADING EDGES BETWEEN 27" AND 80" ABOVE FINISHED FLOOR, SHALL PROTRUDE NO MORE THAN 4" INTO WALKS, CORRIDORS, PASSAGEWAYS OR AISLES. OBJECTS MOUNTED WITH THEIR LEADING EDGES AT OR BELOW 27" ABOVE THE FINISHED FLOOR MAY PROTRUDE AT ANY AMOUNT. FREE-STANDING OBJECTS MOUNTED ON POSTS OR PYLONS MAY OVERHANG 12" MAXIMUM FROM 27" TO 80" ABOVE THE GROUND OR FINISHED FLOOR. PROTRUDING OBJECTS SHALL NOT REDUCE THE CLEAR WIDTH OF AN ACCESSIBLE ROUTE OR MANEUVERING SPACE. (CBC SEC. 1133B.8.6.1)

4. WHENEVER SIGNS MOUNTED ON POSTS OR PYLONS PROTRUDE FROM THE POSTS OR PYLONS PROTRUDE AND THE BOTTOM EDGE OF THE SIGNS IS AT LESS THAN 80" ABOVE THE FINISHED FLOOR OR GROUND LEVEL, THE EDGES OF SUCH SIGNS SHALL BE ROUNDED OR EASED AND THE CORNERS SHALL HAVE A MINIMUM RADIUS OF 0.125". (CBC SEC. 1133B.8.6.3)

Signs

1. THE INTERNATIONAL SYMBOL OF ACCESSIBILITY SHALL CONSIST OF A WHITE FIGURE ON A BLUE BACKGROUND. THE BLUE SHALL BE EQUAL TO COLOR NO. 15090 IN FEDERAL STANDARD 595B. (EXCEPTION: THE APPROPRIATE ENFORCEMENT AGENCY MAY APPROVE OTHER COLORS TO COMPLEMENT DECOR OR UNIQUE DESIGN. THE SYMBOL CONTRAST SHALL BE LIGHT ON DARK OR DARK ON LIGHT). (CBC SEC. 1117B.5.8.1.1)

2. CHARACTERS ON SIGNS SHALL BE SELECTED FROM FONTS THAT HAVE A WIDTH-TO-HEIGHT RATIO OF BETWEEN 3:5 AND 1:1 MEASURED BY THE WIDTH OF THE UPPERCASE LETTER "O" AND A HEIGHT OF THE UPPERCASE LETTER "I", AND A STROKE WIDTH-TO-HEIGHT RATIO OF BETWEEN 1:5 AND 1:10 MEASURED BY THE WIDTH AND HEIGHT OF THE UPPERCASE LETTER "I" . (CBC SEC. 1117B.5.3)

3. CHARACTERS ON SIGNS SHALL BE SIZED ACCORDING TO THE VIEWING DISTANCE FROM WHICH THEY ARE TO BE READ FOUND ON THE "VISUAL CHARACTER HEIGHT" TABLE, SEC. 1117B.5.4. THE MINIMUM HEIGHT IS MEASURED USING AN UPPERCASE LETTER "I". LOWERCASE CHARACTERS ARE PERMITTED. VIEWING DISTANCE SHALL BE MEASURED AS THE HORIZONTAL DISTANCE BETWEEN THE CHARACTER AND AN OBSTRUCTION PREVENTING FURTHER APPROACH TOWARDS THE SIGN. (CBC SEC. 1117B.5.4)

4. CHARACTERS, SYMBOLS AND THEIR BACKGROUND SHALL HAVE A NONGLARE FINISH. CHARACTERS AND SYMBOLS SHALL BE CONTRAST WITH THEIR BACKGROUND, EITHER LIGHT CHARACTERS ON A DARK BACKGROUND OR DARK CHARACTERS ON A LIGHT BACKGROUND. (CBC SEC. 1117B.5.2)

5. WHEN RAISED CHARACTERS OR PICTORIAL SYMBOLS (PICTOGRAMS) ARE USED, THEY SHALL CONFORM TO THE FOLLOWING: (CBC SEC. 1117B.5.5)
   a. CHARACTERS ON SIGNS SHALL BE RAISED 1/32" MIN. AND SHALL BE SANS SERIF UPPERCASE CHARACTERS ACCOMPANIED BY CONTRACTED GRADE 2
   b. BRAILLE COMPLYING WITH 1117B.5.6. (CBC SEC. 1117B.5.5.1)
   c. RAISED CHARACTERS SHALL BE A MIN. OF 5/8" AND A MAXIMUM OF 2" HIGH. (CBC SEC. 1117B.5.5.2)
   d. PICTORIAL SYMBOL SIGNS (PICTOGRAMS) SHALL BE ACCOMPANIED BY THE VERBAL DESCRIPTION PLACED DIRECTLY BELOW THE PICTOGRAM. THE OUTSIDE DIMENSION OF THE PICTOGRAM FIELD SHALL BE A MIN. OF 6" IN HEIGHT. (CBC SEC. 1117B.5.5.3)
   e. CHARACTERS AND BRAILLE SHALL BE IN A HORIZONTAL FORMAT. BRAILLE SHALL BE PLACED A MINIMUM OF 3/8" AND A MAXIMUM OF 1/2" DIRECTLY BELOW THE TACTILE CHARACTERS; FLUSH LEFT OF CENTERED. WHEN TACTILE TEXT IS MULTILINED, ALL BRAILLE SHALL BE PLACED TOGETHER BELOW ALL LINES OF TACTILE TEXT. (CBC 1117B.5.5.4)

6. CONTRACTED (GRADE 2) BRAILLE SHALL BE USED WHEREVER BRAILLE IS REQUIRED IN OTHER PORTIONS OF THESE STANDARDS. DOTS SHALL BE 1/10" ON CENTER IN EACH CELL WITH 2/10" SPACE BETWEEN CELLS MEASURED FROM THE SECOND COLUMN OF DOTS IN THE FIRST CELL TO THE FIRST COLUMN OF DOTS IN THE SECOND CELL. DOTS SHALL BE RAISED A MIN. OF 1/40" ABOVE THE BACKGROUND. BRAILLE DOTS SHALL BE DOMED OR ROUNDED. (CBC SEC. 1117B.5.6)

7. ENTRANCES TO BUILDINGS AND FACILITIES THAT ARE ACCESSIBLE TO AND USABLE BY PERSONS WITH DISABILITIES SHALL BE IDENTIFIED WITH A MINIMUM OF ONE SIGN DISPLAYING THE INTERNATIONAL SYMBOL OF ACCESSIBILITY AND WITH ADDITIONAL DIRECTIONAL SIGNS, UTILIZING THE SYMBOL, AT JUNCTIONS WHERE THE ACCESSIBLE ROUTE OF TRAVEL DIVERGES FROM THE REGULAR CIRCULATION PATH, TO BE VISIBLE TO PERSONS ALONG APPROACHING CIRCULATION PATHS. IN EXISTING BUILDINGS AND FACILITIES, ENTRANCES WHICH ARE NOT ACCESSIBLE SHALL HAVE DIRECTIONAL SIGNAGE COMPLYING WITH SEC. 1117B.5.1, ITEM 2 AND 3, WHICH INDICATES THE LOCATION OF AND ROUTE TO THE NEAREST ACCESSIBLE ENTRANCE. (CBC SEC. 1117B.5.8.1.2 AND 1127B.3)

8. WHERE PERMANENT IDENTIFICATION SIGNS ARE PROVIDED FOR ROOMS AND SPACES, SIGNS SHALL BE INSTALLED ON THE WALL ADJACENT TO THE LATCH SIDE OF THE DOOR. WHERE THERE IS NO WALL SPACE ON THE LATCH SIDE, INCLUDING AT DOUBLE LEAF DOORS, SIGNS SHALL BE PLACED ON THE NEAREST ADJACENT WALL, PREFERABLY ON THE RIGHT. (CBC SEC. 1117B.5.7)

9. WHERE PERMANENT IDENTIFICATION SIGNAGE IS PROVIDED FOR ROOMS AND SPACES, THEY SHALL BE LOCATED ON THE APPROACH SIDE OF THE DOOR AS ONE ENTERS THE ROOM OR SPACE. (CBC SEC. 1117B.5.7)

10. SIGNS THAT IDENTIFY EXITS SHALL BE LOCATED ON THE APPROACH SIDE OF THE DOOR AS ONE EXITS THE ROOM OR SPACE. (CBC SEC. 1117B.5.7)

11. MOUNTING HEIGHT FOR SIGNAGE SHALL BE 60" ABOVE THE FINISHED FLOOR TO THE CENTER LINE OF THE SIGN. MOUNTING LOCATION SHALL BE DETERMINED SO THAT A PERSON MAY APPROACH WITHIN 3" OF SIGNAGE WITHOUT ENCOUNTERING PROTRUDING OBJECTS OR STANDING WITHIN THE SWING OF A DOOR. (CBC SEC. 1117B.5.7)

Parking Spaces, Parking Structures, Loading Zones

1. EACH PARKING SPACE RESERVED FOR PERSONS WITH PHYSICAL DISABILITIES SHALL BE IDENTIFIED BY A REFLECTORIZED SIGN PERMANENTLY POSTED IMMEDIATELY ADJACENT TO AND VISIBLE FROM EACH STALL OR SPACE, CONSISTING OF THE INTERNATIONAL SYMBOL OF ACCESSIBILITY IN WHITE ON A DARK BLUE BACKGROUND. THE SIGN SHALL NOT BE SMALLER THAN 70 SQUARE INCHES IN AREA AND, WHEN IN A PATH OF TRAVEL, SHALL BE POSTED AT A MINIMUM HEIGHT OF 80" FROM THE BOTTOM OF THE SIGN TO THE PARKING SPACE FINISHED GRADE. SIGNS MAY ALSO BE CENTERED ON THE WALL AT THE INTERIOR END OF THE PARKING SPACE. AN ADDITIONAL SIGN OR ADDITIONAL LANGUAGE BELOW THE SYMBOL OF ACCESSIBILITY SHALL STATE "MINIMUM FINE $250". (CBC SEC. 1129B.4)

2. VAN ACCESSIBLE SPACES COMPLYING WITH SECTION 1129B.3, ITEM 2 SHALL HAVE AN ADDITIONAL SIGN OR LANGUAGE STATING "VAN ACCESSIBLE" BELOW THE SYMBOL OF ACCESSIBILITY. SIGNS SHALL BE LOCATED SO THEY CANNOT BE OBSCURED BY A VEHICLE PARKED IN THE SPACE. (CBC SEC. 1129B.4)

3. AN ADDITIONAL SIGN SHALL ALSO BE POSTED IN A CONSPICUOUS PLACE AT EACH ENTRANCE TO OFF-STREET PARKING FACILITIES, OR IMMEDIATELY ADJACENT TO AND VISIBLE FROM EACH STALL OR SPACE. THE SIGN SHALL NOT BE LESS THAN 17"X 22" IN SIZE WITH 1" HIGH MINIMUM LETTERING, WHICH CLEARLY AND CONSPICUOUSLY STATES THE FOLLOWING (CBC SEC. 1129B.4):

   "UNAUTHORIZED VEHICLES PARKED IN DESIGNATED ACCESSIBLE SPACES NOT DISPLAYING DISTINGUISHING PLACARDS OR SPECIAL LICENSE PLATES ISSUED FOR PERSONS WITH DISABILITIES MAY BE TOWED AWAY AT OWNER'S EXPENSE. TOWED VEHICLES MAY BE RECLAIMED AT __________ OR BY TELEPHONING __________ ."

   (BLANK SPACES ARE TO BE FILLED IN WITH APPROPRIATE INFORMATION AS A PERMANENT PART OF THE SIGN.)

4. IN ADDITION TO THE ABOVE REQUIREMENTS, THE SURFACE OF EACH ACCESSIBLE PARKING SPACE OR STALL SHALL HAVE A SURFACE IDENTIFICATION DUPLICATING EITHER OF THE FOLLOWING SCHEMES:
   a. BY OUTLINING OR PAINTING THE STALL OR SPACE IN BLUE AND OUTLINING ON THE GROUND IN THE STALL OR SPACE IN WHITE OR SUITABLE CONTRASTING COLOR A PROFILE VIEW DEPICTING A WHEELCHAIR WITH OCCUPANT; OR
   b. BY OUTLINING A PROFILE VIEW OF A WHEELCHAIR WITH OCCUPANT IN WHITE ON BLUE BACKGROUND. THE PROFILE VIEW SHALL BE LOCATED SO THAT IT IS VISIBLE TO A TRAFFIC ENFORCEMENT OFFICER WHEN A VEHICLE IS PROPERLY PARKED IN THE SPACE AND SHALL BE 36"X36". (CBC SEC. 1129B.4)

5. SURFACE SLOPES OF ACCESSIBLE PARKING SPACES SHALL BE THE MINIMUM POSSIBLE AND SHALL NOT EXCEED ONE UNIT VERTICAL TO 50 UNITS HORIZONTAL (2% SLOPE) IN ANY DIRECTION. (CBC SEC. 1129B.3.4)

6. WHEN PROVIDED, PASSENGER DROP-OFF AND LOADING ZONES SHALL BE LOCATED ON ACCESSIBLE ROUTE OF TRAVEL (COMPLYING WITH 1114B1.2) AND SHALL COMPLY WITH 1131B.2. (CBC SEC. 1131B.1)

7. WHERE PROVIDED, ONE PASSENGER DROP-OFF AND LOADING ZONE SHALL PROVIDE AN ACCESS AISLE AT LEAST 5'-0" WIDE AND 20'-0" LONG ADJACENT AND PARALLEL TO THE VEHICLE PULL-UP SPACE. VEHICLE STANDING SPACES AND ACCESS AISLES SHALL BE LEVEL WITH SURFACE SLOPES NOT EXCEEDING 1:50 (2% SLOPE) IN ALL DIRECTIONS. IF THERE ARE CURBS BETWEEN THE ACCESS AISLE AND THE VEHICLE PULL-UP SPACE, A CURB RAMP SHALL BE PROVIDED. EACH PASSENGER DROP-OFF AND LOADING ZONE DESIGNED FOR PERSONS WITH DISABILITIES SHALL BE IDENTIFIED BY A REFLECTORIZED SIGN, COMPLYING WITH CBC SEC. 1117B.5.1, ITEMS 2 AND 3, PERMANENTLY POSTED IMMEDIATELY ADJACENT TO AND VISIBLE FROM THE PASSENGER DROP-OFF OR LOADING ZONE STATING "PASSENGER LOADING ZONE ONLY" AND INCLUDING THE INTERNATIONAL SYMBOL OF ACCESSIBILITY, IN WHITE ON A DARK BLUE BACKGROUND. (CBC SEC. 1131B.2.1)

8. PROVIDE MINIMUM VERTICAL CLEARANCE OF 114" (9'-6") AT ACCESSIBLE PASSENGER LOADING ZONES AND ALONG AT LEAST ONE VERTICAL ACCESS ROUTE TO SUCH AREAS FROM SITE ENTRANCES AND EXITS (CBC SEC. 1131B2.2)

9. ALL ENTRANCES TO AND VERTICAL CLEARANCES WITHIN PARKING STRUCTURES SHALL HAVE A MINIMUM VERTICAL CLEARANCE OF 98" (8'-2") WHERE REQUIRED FOR ACCESSIBILITY TO ACCESSIBLE PARKING SPACES. (CBC SEC. 1130B)

Drinking Fountains

1. WHERE DRINKING FOUNTAINS ARE PROVIDED THEY SHALL COMPLY WITH:
   a. WHERE ONLY ONE DRINKING FOUNTAIN IS PROVIDED ON A FLOOR, THERE SHALL BE A DRINKING FOUNTAIN THAT IS ACCESSIBLE TO INDIVIDUALS WHO USE WHEELCHAIRS AND ONE ACCESSIBLE TO THOSE WHO HAVE DIFFICULTY BENDING OR STOOPING. THIS CAN BE ACCOMPLISHED BY THE USE OF "HIGH-LOW" FOUNTAINS, OR BY SUCH OTHER MENS AS WOULD ACHIEVE THE REQUIRED ACCESSIBILITY FOR EACH GROUP ON EACH FLOOR. WHERE MORE THAN ONE DRINKING FOUNTAIN IS PROVIDED ON A FLOOR, 50% OF THOSE PROVIDE SHALL COMPLY WITH (CBC SEC. 1115B.4.6.1):
   a.1. WALL AND POST-MOUNTED CANTILEVERED DRINKING FOUNTAINS SHALL BE A MINIMUM OF 18" AND A MAXIMUM OF 19" IN DEPTH AND SHALL HAVE A CLEAR KNEE SPACE BETWEEN THE BOTTOM OF THE APRON AND THE FLOOR OR GROUND NOT LESS THAN 27" IN HEIGHT, 30" IN WIDTH, AND 8" IN DEPTH, THE DEPTH MEASUREMENTS BEING TAKEN FROM THE FRONT EDGE OF THE FOUNTAIN BACK TOWARD THE WALL OR MOUNTING POST. THE KNEE CLEARANCE SPACE MUST BE FREE OF EQUIPMENT OR OBSTRUCTIONS. ADDITIONALLY, THERE SHALL BE TOE CLEARANCE OF 9" IN HEIGHT ABOVE THE FLOOR AND 17" IN DEPTH FROM THE FRONT EDGE OF THE FOUNTAIN. THE TOE CLEARANCE SPACE MUST BE FREE OF EQUIPMENT OR OBSTRUCTIONS. A CLEAR FLOOR SPACE AT LEAST 30" BY 48" COMPLYING WITH SEC. 1118B.4 SHALL BE PROVIDED IN FRONT OF THE DRINKING FOUNTAIN TO ALLOW FORWARD APPROACH. A SIDE APPROACH DRINKING FOUNTAIN IS NOT ACCEPTABLE. (CBC SEC. 1115B.4.6.2)
   b. ALL DRINKING FOUNTAINS SHALL BE LOCATED COMPLETELY WITHIN ALCOVES OR OTHERWISE POSITIONED SO AS NOT TO ENCROACH INTO PEDESTRIAN WAYS. THE ALCOVE IN WHICH THE DRINKING FOUNTAINS LOCATED SHALL NOT BE LESS THAN 32" IN WIDTH AND 18" IN DEPTH. ADDITIONALLY, ALCOVES OR OTHERWISE POSITIONED SO AS TO LIMIT ENCROACHMENT INTO PEDESTRIAN WAYS ARE PERMITTED TO PROJECT 4" INTO WALKS, HALLS, CORRIDORS, PASSAGEWAYS OR AISLES. (CBC SEC. 1115B.4.6.3)

2. SEE DETAILS FOR ADDITIONAL INFORMATION

Doorways

1. EVERY REQUIRED EXIT DOORWAY SHALL BE OF A SIZE AS TO PERMIT THE INSTALLATION OF A DOOR NOT LESS THAN 3'-0" IN WIDTH, AND NOT LESS THAN 6'-8" IN HEIGHT. WHEN INSTALLED IN EXIT DOORWAYS, EXIT DOORS SHALL BE CAPABLE OF OPENING AT LEAST 90 DEGREES AND SHALL BE SO MOUNTED THAT THE CLEAR WIDTH OF THE EXITWAY IS NOT LESS THAN 32" MEASURED BETWEEN THE FACE OF THE DOOR AND THE OPPOSITE STOP. (CBC SEC. 1133B.2.2)

2. FOR HINGED DOORS, THE OPENING WIDTH SHALL BE MEASURED WITH THE DOOR POSITIONED AT AN ANGLE OF 90 DEGREES FROM ITS CLOSED POSITION. WHERE A PAIR OF DOORS IS UTILIZED, AT LEAST ONE OF THE DOORS SHALL PROVIDE A CLEAR, UNOBSTRUCTED OPENING WIDTH OF 32" WITH THE LEAF POSITIONED AT AN ANGLE OF 90 DEGREES FROM ITS CLOSED POSITION. (CBC SEC. 1133B.2.3, 1133B.2.3.1)

3. REGARDLESS OF THE OCCUPANT LOAD, THERE SHALL BE A FLOOR OR LANDING ON EACH SIDE OF A DOOR. (CBC SEC. 1133B.2.4)

4. THE FLOOR OR LANDING SHALL NOT BE MORE THAN 1/2" LOWER THAN THE THRESHOLD OF THE DOORWAY. CHANGE IN LEVEL BETWEEN 1/4" AND 1/2" SHALL BE BEVELED WITH A SLOPE NO GREATER THAN ONE UNIT VERTICAL TO TWO UNITS HORIZONTAL. CHANGES IN LEVEL GREATER THAN 1/2" SHALL BE ACCOMPLISHED BY MEANS OF A RAMP. SEE SEC. 1133B.5.1. (CBC SEC. 1133B.2.4.1)

5. THE FLOOR (INCLUDING LANDINGS) OR GROUND AREA WITHIN THE REQUIRED MANEUVERING CLEARANCES SHALL BE LEVEL AND CLEAR. (CBC SEC. 1133B.2.4.2)

6. THE LEVEL AREA (FLOOR OR LANDING) SHALL HAVE A LENGTH IN THE DIRECTION OF DOOR SWING OF AT LEAST 60" AND THE LENGTH OPPOSITE THE DIRECTION OF DOOR SWING OF 48" AS MEASURED AT RIGHT ANGLES TO THE PLANE OF THE DOOR IN ITS CLOSED POSITION, OR 44" WHERE THE DOOR HAS NO CLOSER AND APPROACH TO THE DOOR BY A PERSON IN A WHEELCHAIR CAN BE MADE FROM THE LATCH SIDE, OR IF THE DOOR HAS NEITHER LATCH NOR CLOSER AND APPROACH CAN BE MADE FROM THE HINGE SIDE. (CBC SEC. 1133B.2.4.2)

7. THE WIDTH OF THE LEVEL AREA ON THE SIDE TO WHICH THE DOOR SWINGS SHALL EXTEND 24" PAST THE STRIKE EDGE OF THE DOOR FOR EXTERIOR DOORS AND 18" PAST THE STRIKE EDGE FOR INTERIOR DOORS. (CBC SEC. 1133B.2.4.3)

8. THE SPACE BETWEEN TWO CONSECUTIVE DOOR OPENINGS IN A VESTIBULE, SERVING OTHER THAN A REQUIRED EXIT STAIRWAY, SHALL PROVIDE A MINIMUM OF 48" OF CLEAR SPACE FROM ANY DOOR OPENING INTO SUCH VESTIBULE WHEN THE DOOR IS POSITIONED AT AN ANGLE OF 90 DEGREES FROM ITS CLOSED POSITION. DOORS IN A SERIES SHALL SWING EITHER IN THE SAME DIRECTION OR AWAY FROM THE SPACE BETWEEN THE DOORS. (CBC SEC. 1133B.2.4.4)

9. WHERE A DOOR REQUIRED TO BE ACCESSIBLE BY SECTION 1133B.1.1.1 IS LOCATED IN A RECESS OR ALCOVE WHERE THE DISTANCE FROM THE FACE OF THE DOOR IS GREATER THAN 8", STRIKE SIDE CLEARANCES AS PRESCRIBED IN SEC. 1133B.2.4.3 SHALL BE PROVIDED. (CBC SEC. 1133B.2.4.5)

10. MAXIMUM EFFORT TO OPERATE DOORS SHALL NOT EXCEED 5 POUNDS FOR EXTERIOR DOORS AND INTERIOR DOORS, SUCH PULL OR PUSH EFFORT BEING APPLIED AT RIGHT ANGLES TO HINGED DOORS AND AT THE CENTER PLANE OF SLIDING OR FOLDING DOORS. COMENSATING DEVICES OR AUTOMATIC DOOR OPERATORS MAY BE UTILIZED TO MEET THE ABOVE STANDARDS. WHEN FIRE DOORS ARE REQUIRED, THE MAXIMUM EFFORT TO OPERATE THE DOOR MAY BE INCREASED TO THE MINIMUM ALLOWABLE BY THE APPROPRIATE ADMINISTRATIVE AUTHORITY, NOT TO EXCEED 15 POUNDS. (CBC SEC. 1133B.2.5)

11. IF THE DOOR HAS A CLOSER, THEN THE SWEEP PERIOD OF THE CLOSER SHALL BE ADJUSTED SO THAT FROM AN OPEN POSITION OF 70 DEGREES, THE DOOR WILL TAKE AT LEAST 3 SECONDS TO MOVE TO A POINT 3" FROM THE LATCH, MEASURED TO THE LEADING EDGE OF THE DOOR. (CBC SEC. 1133B.2.5.1)

12. HAND-ACTIVATED DOOR OPENING HARDWARE, HANDLES, PULLS, LATCHES, LOCKS, AND OTHER OPERATING DEVICES ON ACCESSIBLE DOORS SHALL HAVE A SHAPE THAT IS EASY TO GRASP WITH ONE HAND AND DOES NOT REQUIRE TWISTING OF THE WRIST TO OPERATE. HARDWARE SHALL BE CENTERED BETWEEN 30" AND 44" ABOVE THE FLOOR. LATCHING AND LOCKING DOORS THAT ARE HAND-ACTIVATED AND WHICH ARE IN A PATH OF TRAVEL SHALL BE OPERABLE WITH A SINGLE EFFORT BY LEVER-TYPE HARDWARE, PANIC BARS, PUSH-PULL ACTIVATING BARS OR OTHER HARDWARE DESIGNED TO PROVIDE PASSAGE. LOCKED EXIT DOORS SHALL OPERATE AS ABOVE IN EGRESS DIRECTION. (CBC SEC. 1133B.2.5.2)

13. THE BOTTOM 10" OF ALL DOORS EXCEPT AUTOMATIC OR SLIDING SHALL HAVE A SMOOTH, UNINTERRUPTED SURFACE TO ALLOW THE DOOR TO BE OPENED BY A WHEELCHAIR FOOTREST WITHOUT CREATING A TRAP OR HAZARDOUS CONDITION. (CBC SEC. 1133B.2.6)

Restrooms

1. WATER CLOSETS REQUIRED TO BE ACCESSIBLE SHALL COMPLY WITH:

   a. THE CENTERLINE OF THE WATER CLOSET FIXTURE SHALL BE 18" FROM THE SIDE WALL PARTITION. ON THE OTHER SIDE OF THE WATER CLOSET, PROVIDE A MINIMUM OF 28" WIDE CLEAR FLOOR SPACE IF THE WATER CLOSET IS ADJACENT TO A FIXTURE OR A MINIMUM OF 32" WIDE CLEAR FLOOR SPACE IF THE WATER CLOSET IS ADJACENT TO A WALL OR PARTITION. THIS CLEAR FLOOR SPACE SHALL EXTEND FROM THE REAR WALL TO THE FRONT OF THE WATER CLOSET. (CBC SEC. 1115B.4.1.1)

   b. A MINIMUM OF 60" WIDE AND 48" DEEP CLEAR FLOOR SPACE SHALL BE PROVIDED IN FRONT OF THE WATER CLOSET. (CBC SEC. 1115B.4.1.2)

   c. GRAB BARS:
   c.1. GRAB BARS FOR WATER CLOSETS SHALL COMPLY WITH SEC. 1115B.7 AND SHALL BE PROVIDED ON THE SIDE WALL CLOSEST TO THE WATER CLOSET AND ON THE REAR WALL. GRAB BARS FOR WATER CLOSETS LOCATED WITHIN AMBULATORY ACESSIBLE COMPARTMENTS SHALL COMPLY WITH SEC. 1115B.7 AND SHALL BE PROVIDED ON BOTH SIDES OF THE COMPARTMENT. (CBC SEC. 1115B.4.1.3)

   c.2. GRAB BARS SHALL NOT PROJECT MORE THAN 3" INTO THE REQUIRED FLOOR SPACE. (CBC SEC. 1115B.4.1.3)

   c.3. SIDE WALL- THE SIDE GRAB BAR SHALL BE 42" LONG. MINIMUM, LOCATED 12" MAXIMUM FROM THE REAR WALL AND EXTENDED 54" MINIMUM FROM THE REAR WALL WITH THE FRONT END POSITIONED 24" MINIMUM IN FRONT OF THE WATER CLOSET. THE SIDE GRAB BAR SHALL BE SECURELY ATTACHED AND CENTERED 33" ABOVE AND PARALLEL TO THE FLOOR. (CBC SEC. 1115B.4.1.3.1)

   c.4. REAR WALL- THE REAR GRAB BAR SHALL BE 36" LONG MINIMUM AND EXTEND FROM THE CENTERLINE OF THE WATER CLOSET 12" MINIMUM ON ONE SIDE AND 24" MINIMUM ON THE OTHER SIDE. THE REAR GRAB BAR SHALL BE SECURELY ATTACHED AND CENTERED 33" ABOVE AND PARALLEL TO THE FLOOR, EXCEPT THAT WHERE A TANK-TYPE TOILET IS USED WHICH OBSTRUCTS PLACEMENT AT 33", THE GRAB BAR MAY BE AS HIGH AS 36" AND THE SPACE BETWEEN THE GRAB BAR AND THE TOP OF THE TANK SHALL BE 1-1/2" MINIMUM. (CBC SEC. 1115B.4.1.3.2)

   c.5. THE STRUCTURAL STRENGTH OF GRAB BARS, FASTENERS, AND MOUNTING DEVICES SHALL MEET THE FOLLOWING SPECIFICATIONS OF CBC SEC. 1115B.7.2:

   c.5.1. BENDING STRESS IN A GRAB BAR OR SEAT INDUCED BY THE MAXIMUM BENDING MOMENT FROM THE APPLICATION OF A 250-LB POINT LOAD SHALL BE LESS THAN THE ALLOWABLE STRESS FOR THE MATERIAL OF THE GRAB BAR OR SEAT. (CBC SEC. 1115B.7.2.1)

   c.5.2. SHEAR STRESS INDUCED IN A GRAB BAR OR SEAT BY THE APPLICATION OF A 250-LB POINT LOAD SHALL BE LESS THAN THE ALLOWABLE SHEAR STRESS FOR THE MATERIAL OF THE GRAB BAR OR SEAT, AND ITS MOUNTING BRACKET OR OTHER SUPPORT IS CONSIDERED TO BE FULLY RESTRAINED, THEN DIRECT AND TORSIONAL SHEAR STRESSES SHALL NOT EXCEED THE ALLOWABLE SHEAR STRESS. (CBC SEC. 1115B.7.2.2)

   c.5.3. SHEAR FORCE INDUCED IN FASTENER OR MOUNTING DEVICES FROM THE APPLICATION OF A 250-LB POINT LOAD SHALL BE LESS THAN THE ALLOWABLE LATERAL LOAD OF EITHER THE FASTENER OR MOUNTING DEVICE OR THE SUPPORTING STRUCTURE, WHICHEVER HAS THE SMALLER ALLOWABLE LOAD. (CBC SEC. 1115B.7.2.3)

   c.5.4. TENSILE FORCE INDUCED IN A FASTENER BY A DIRECT TENSION FORCE OF A 250-LB POINT LOAD, PLUS THE MAXIMUM MOMENT FROM THE APPLICATION OF A 250-LB POINT LOAD, SHALL BE LESS THAN THE ALLOWABLE WITHDRAWAL LOAD BETWEEN THE FASTENER AND SUPPORTING STRUCTURE. (CBC SEC. 1115B.7.2.4)
   c.5.5. GRAB BARS SHALL NOT ROTATE WITHIN THEIR FITTINGS. (CBC SEC. 1115B.7.2.5)

   c.6. THE DIAMETER OR WIDTH OF THE GRIPPING SURFACES OF A GRAB BAR SHALL BE 1 1/4" TO 1 1/2" OR THE SHAPE SHALL PROVIDE AN EQUIVALENT GRIPPING SURFACE. IF GRAB BARS ARE MOUNTED ADJACENT TO WALL, THE SPACE BETWEEN THE WALL AND THE GRAB BARS SHALL BE 1 1/2". (CBC SEC. 1115B.7.1)

   c.7. A GRAB BAR AND ANY WALL OR OTHER SURFACE ADJACENT TO IT SHALL BE FREE OF ANY SHARP OR ABRASIVE ELEMENTS. EDGES SHALL HAVE A MINIMUM RADIUS OF 1/8". (CBC SEC. 1115B.7.3)

   d. THE HEIGHT OF ACCESSIBLE WATER CLOSETS SHALL BE A MINIMUM OF 17" AND A MAXIMUM OF 19" MEASURED TO THE TOP OF A MAXIMUM 2" HIGH TOILET SEAT. (CBC SEC. 1115B.4.1.4)

   e. CONTROLS SHALL BE OPERABLE WITH ONE HAND AND SHALL NOT REQUIRE TIGHT GRASPING, PINCHING OR TWISTING. CONTROLS FOR THE FLUSH VALVES SHALL BE MOUNTED ON THE WIDE SIDE OF TOILET AREAS, NO MORE THAN 44" ABOVE THE FLOOR. THE FORCE REQUIRED TO ACTIVATE CONTROLS SHALL BE NO GREATER THAN 5 POUNDS-FORCE. (CBC SEC. 1115B.4.1.5)

   f. AUTOMATIC SPRING TO LIFTED POSITION SEATS ARE NOT ALLOWED. (CBC SEC. 1115B.4.1.7)

2. URINALS REQUIRED TO BE ACCESSIBLE SHALL COMPLY WITH:

   a. SHALL BE FLOOR MOUNTED, STALL-TYPE, OR WALL HUNG. (CBC SEC. 1115B.4.2.1)

   b. WHERE ONE OR MORE URINALS ARE PROVIDED, AT LEAST ONE WITH AN ELONGATED RIM PROJECTING A MINIMUM OF 14" FROM THE WALL AND A MAXIMUM OF 17" FROM THE WALL AND A MAXIUM 17" ABOVE THE FLOOR SHALL BE PROVIDED. (CBC SEC. 1115B.4.2.1)

   c. FLUSH CONTROLS SHALL BE OPERABLE WITH ONE HAND AND AND SHALL NOT REQUIRE TIGHT GRASPING,

   d. INCHING OR TWISTING OF THE WRIST AND SHALL BE MOUNTED NO MORE THAN 44" ABOVE THE FLOOR. THE FORCE REQUIRED TO ACTIVATE CONTROLS SHALL BE NO GREATER THAN 5 LBS. ELECTRONIC AUTOMATIC FLUSHING CONTROLS ARE ACCEPTABLE AND PREFERABLE. (CBC SEC. 1115B.4.2.2)

   e. WHERE URINALS ARE PROVIDED, AT LEAST ONE SHALL HAVE A CLEAR FLOOR SPACE 30" BY 48" IN FRONT OF THE URINAL TO ALLOW FORWARD APPROACH. THIS CLEAR SPACE SHALL COMPLY WITH SEC. 1118B.4. (CBC SEC. 1115B.4.2.3)

3. LAVATORIES REQUIRED TO BE ACCESSIBLE SHALL COMPLY WITH:

   a. FAUCET CONTROLS AND OPERATING MECHANISMS SHALL BE OPERABLE WITH ONE HAND AND SHALL NOT REQUIRE TIGHT GRASPING, PINCHING, OR TWISTING OF THE WRIST. THE FORCE REQUIRED TO ACTIVATE CONTROLS SHALL BE NO GREATER THAN 5 LBS. LEVER-OPERATED, PUSH-TYPE AND ELECTRONICALLY CONTROLLED MECHANISMS (PREFERABLE) ARE EXAMPLES OF ACCEPTABLE DESIGNS. SELF-CLOSING VALVES ARE ALLOWED IF THE FAUCET REMAINS OPEN FOR AT LEAST 10 SECONDS. (CBC SEC. 1115B.4.3.1)

   b. LAVATORIES, WHEN LOCATED ADJACENT TO A SIDE WALL OR PARTITION, SHALL BE A MINIMUM OF 18" TO THE CENTER LINE OF THE FIXTURE. (CBC SEC. 1115B.4.3.2)

   c. ALL LAVATORIES THAT ARE DESIGNATED TO BE ACCESSIBLE SHALL BE A MINIMUM OF 17" IN HORIZONTAL DEPTH AND MOUNTED WITH THE RIM OR COUNTER EDGE NO HIGHER THAN 34" ABOVE THE FINISHED FLOOR AND WITH VERTICAL CLEARANCE MEASURED FROM THE BOTTOM OF THE APRON OR THE OUTSIDE BOTTOM EDGE OF THE LAVATORY OF 29" REDUCING TO 27" AT A POINT LOCATED 8" BACK FROM THE FRONT EDGE. IN ADDITION, A MINIMUM 9" HIGH TOE CLEARANCE MUST BE PROVIDED EXTENDING BACK TOWARD THE WALL TO A DISTANCE NO MORE THAN 6" FROM THE BACK WALL. THE TOE CLEARANCE SPACE MUST BE FREE OF EQUIPMENT OR OBSTRUCTIONS. (CBC SEC. 1115B.4.3.2)

   d. A CLEAR FLOOR SPACE OF 30" BY 48" COMPLYING WITH SECTION 1118B.4 SHALL BE PROVIDED IN FRONT OF A LAVATORY TO ALLOW FORWARD APPROACH. SUCH CLEAR FLOOR SPACE SHALL ADJOIN OR OVERLAP AN ACCESSIBLE ROUTE AND SHALL EXTEND A MAXIMUM OF 19" INTO KNEE AND TOE SPACE UNDERNEATH THE LAVATORY. (CBC SEC. 1115B.4.3.3)

   e. HOT WATER AND DRAINPIPES ACCESSIBLE UNDER LAVATORIES SHALL BE INSULATED OR OTHERWISE COVERED. THERE SHALL BE NO SHARP OR ABRASIVE SURFACES UNDER LAVATORIES. (CBC SEC. 1115B.4.3.4)

4. ACCESSIBLE WATER CLOSET APARTMENTS SHALL COMPLY WITH:

   a. THE COMPARTMENT SHALL BE A MINIMUM OF 60" WIDE. (CBC SEC. 1115B.3.4.1)

   b. IF THE COMPARTMENT HAS A SIDE-OPENING DOOR, A MINIMUM 60" WIDE AND 60" DEEP CLEAR FLOOR SPACE SHALL BE PROVIDED IN FRONT OF THE WATER CLOSET. (CBC SEC. 1115B.3.4.2)

   c. IF THE COMPARTMENTS HAS AN END-OPENING DOOR (FACING THE WATER CLOSET), A MINIMUM 60" WIDE AND 48" DEEP CLEAR FLOOR SPACE SHALL BE PROVIDED IN FRONT OF THE WATER CLOSET. THE DOOR SHALL BE LOCATED IN FRONT OF THE CLEAR FLOOR SPACE AND DIAGONAL TO THE WATER CLOSET, WITH A MAXIMUM STILE WIDTH OF 4". (CBC SEC. 1115B.3.4.3)

   d. THE WATER CLOSET COMPARTMENT SHALL BE EQUIPPED WITH A DOOR THAT HAS AN AUTOMATIC-CLOSING DEVICE, AND SHALL HAVE A CLEAR, UNOBSTRUCTED OPENING WIDTH OF 32" WHEN LOCATED AT THE END AND 34" WHEN LOCATED AT THE SIDE WITH THE DOOR POSITIONED AT AN ANGLE OF 90 DEGREES FROM ITS CLOSED POSITION. (CBC SEC. 1115B.3.4.4)

   e. THE INSIDE AND THE OUTSIDE OF THE COMPARTMENT DOOR SHALL BE EQUIPPED WITH A LOOP OR U-SHAPED HANDLE IMMEDIATELY BELOW THE LATCH. THE LATCH SHALL BE FLIP-OVER STYLE, SLIDING OR OTHER HARDWARE NOT REQUIRING THE USER TO GRASP OR TWIST. (CBC SEC. 1115B.3.4.5)

5. WHEELCHAIR CLEARANCE IN MULTIPLE ACCOMMODATION TOILET FACILITIES - A CLEAR SPACE MEASURED FROM THE FLOOR TO A HEIGHT OF 27" ABOVE THE FLOOR, WITHIN THE SANITARY FACILITY ROOM, OF SUFFICIENT SIZE TO INSCRIBE A CIRCLE OF NOT LESS THAN 60" IN SIZE. OTHER THAN THE DOOR TO THE ACCESSIBLE WATER CLOSET COMPARTMENT, A DOOR IN ANY POSITION, MAY NOT ENCROACH INTO THIS SPACE BY NOT MORE THAN 12". (CBC SEC. 1115B.3.1.1)

6. DOORS SHALL NOT SWING INTO THE CLEAR FLOOR SPACE FOR ANY FIXTURE. (CBC SEC. 1115B.3.1.2, 1115B.3.2.2)

7. MIRRORS SHALL BE MOUNTED WITH THE BOTTOM EDGE OF THE REFLECTING SURFACE NO HIGHER THAN 40" FROM THE FLOOR. (CBC SEC. 1115B.8.1)

8. WHERE TOWEL, SANITARY NAPKINS, WASTE RECEPTACLES, DISPENSERS, OTHER EQUIPMENT AND CONTROLS ARE PROVIDED, AT LEAST ONE OF EACH TYPE SHALL BE LOCATED ON AN ACCESSIBLE ROUTE, WITH ALL OPERABLE PARTS, INCLUDING COIN SLOTS, WITHIN 40 INCHES OF THE FINISHED FLOOR AND SHALL COMPLY WITH SEC. 1117B.6. (CBC SEC. 1115B.8.3)

9. TOILET TISSUE DISPENSERS SHALL BE LOCATED ON THE WALL WITHIN 12" OF THE FRONT EDGE OF THE TOILET SEAT, MOUNTED BELOW THE GRAB BAR, AT A MINIMUM HEIGHT OF 19", AND 36" MAXIMUM TO THE FAR EDGE OF THE REAR WALL. DISPENSERS THAT CONTROL DELIVERY OR DO NOT PERMIT CONTINUOS PAPER FLOW SHALL BE NOT BE USED. (CBC SEC. 1115B.8.4)

Ramps

1. ANY ACCESSIBLE ROUTE OF TRAVEL SHALL BE CONSIDERED A RAMP IF ITS SLOPE IS GREATER THAN 1:20 (CBC SEC. 1133B.5.1)

2. PEDESTRIAN RAMPS SHALL HAVE A MINIMUM CLEAR WIDTH OF 48", UNLESS REQUIRED TO BE WIDER BY SOME OTHER PROVISIONS OF THIS CODE. PEDESTRIAN RAMPS SERVING ENTRANCES TO BUILDINGS WHERE THE RAMP IS THE ONLY EXIT DISCHARGE PATH AND SERVES AN OCCUPANT LOAD OF 300 OR MORE SHALL HAVE A MINIMUM CLEAR WIDTH OF 60". RAMPS SERVING GROUP R OCCUPANCIES MAY BE 36" CLEAR WIDTH WHEN THE OCCUPANT LOAD IS 50 OR LESS. (CBC SEC. 1133B.5.2)

3. THE MAXIMUM SLOPE OF A RAMP THAT SERVES ANY EXIT WAY, PROVIDES ACCESS FOR PERSONS WITH PHYSICAL DISABILITIES, OR IS IN THE ACCESSIBLE ROUTE OF TRAVEL SHALL BE 1:12 (8.3% GRADIENT). THE MAXIMUM RISE FOR ANY RUN SHALL BE 30". (CBC SEC. 1133B.5.3)

4. THE CROSS SLOPE OF RAMP SURFACES SHALL BE NO GREATER THAN 2% (1:50). (CBC SEC. 1133B.5.3.1)

5. LEVEL RAMP LANDINGS SHALL BE PROVIDED AT THE TOP AND BOTTOM OF EACH RAMP. TOP LANDINGS SHALL BE NOT LESS THAN 60" WIDE AND SHALL HAVE A LENGTH OF NOT LESS THAN 60" IN THE DIRECTION OF THE RAMP. LANDINGS AT THE BOTTOM OF RAMPS SHALL HAVE A DIMENSION IN THE DIRECTION OF RAMP RUN NOT LESS THAN 72". (CBC SEC. 1133B.5.4.2) INTERMEDIATE AND BOTTOM LANDINGS AT A CHANGE OF DIRECTION IN EXCESS OF 30 DEGREES SHALL HAVE A DIMENSION IN THE DIRECTION OF RAMP RUN OF NOT LESS THAN 72" TO ACCOMMODATE THE HANDRAIL EXTENSION. (CBC SEC. 1133B.5.4.6) OTHER INTERMEDIATE LANDINGS SHALL HAVE A DIMENSION OF NOT LESS THAN 60". (CBC SEC. 1133B.5.4.7)

6. DOORS IN ANY POSITION SHALL NOT REDUCE THE MINIMUM DIMENSION OF THE LANDING TO LESS THAN 42" AND SHALL NOT REDUCE THE REQUIRED WIDTH BY MORE THAN 3" WHEN FULLY OPEN. (CBC SEC. 1133B.5.4.3)

7. REQUIRED RAMPS SHALL HAVE A CURB AT LEAST 2" HIGH, OR A WHEEL GUIDE RAIL 2 TO 4" HIGH ON EACH SIDE OF THE RAMP LANDING THAT HAS A VERTICAL DROP EXCEEDING 4" AND THAT IS NOT BOUNDED BY A WALL OR FENCE. (CBC SEC.1133B.5.4.9) WHEEL GUIDE SHOULD BE PROVIDED SHALL BE CENTERED 3" PLUS OR MINUS 1" ABOVE THE SURFACE OF THE RAMP. (CBC SEC. 1133B.5.6.2)

8. HANDRAILS ARE REQUIRED ON RAMPS, AND SHALL BE PLACED ON EACH SIDE OF THE RAMP, SHALL BE CONTINUOUS THE FULL LENGTH OF THE RAMP, SHALL BE 34 TO 38" ABOVE THE RAMP SURFACE TO THE TOP OF THE HANDRAILS, AND SHALL EXTEND A MINIMUM OF 1 FOOT BEYOND THE TOP AND BOTTOM OF THE RAMP AND SHALL BE PARALLEL WITH THE FLOOR OR GROUND SURFACE. THE INSIDE HANDRAIL ON SWITCHBACK OR DOGLEG RAMPS SHALL BE CONTINUOUS. THE ENDS OF HANDRAILS SHALL BE EITHER ROUNDED OR RETURNED TO THE FLOOR, WALL, OR POST. HANDRAILS PROJECTING FROM A WALL SHALL HAVE A SPACE OF 1-1/2" BETWEEN THE WALL AND THE HANDRAIL. HANDRAILS MAY BE LOCATED IN A RECESS IS A MAXIMUM OF 3" DEEP AND EXTENDSAT LEAST 18" ABOVE THE TOP OF THE RAIL. THE GRIP PORTION SHALL NOT BE LESS THAN 1-1/4" NOR MORE THAN 1-1/2" IN CROSS-SEC.AL NOMINAL DIMENSIO OR THE SHAPE SHALL PROVIDE AN EQUIVALENT GRIPPING SURFACE. ALL HANDRAIL SURFACES SHALL BE SMOOTH WITH NO SHARP CORNERS. HANDRAILS SHALL NOT ROTATE WITHIN THEIR FITTINGS. ANY WALL OR OTHER SURFACE ADJACENT TO THE HANDRAIL SHALL BE FREE OF SHARP OR ABRASIVE ELEMENTS. EDGES SHALL HAVE A MINIMUM RADIUS OF 1/8". (CBC SEC. 1133B.5.5.1)

Stairs

1. FOR STAIR NOTES AND REQUIREMENTS, SEE SHEET "STAIR - PLANS AND SEC.S"

Elevator

1. FOR ELEVATOR NOTES AND REQUIREMENTS, SEE SHEET "ELEVATOR - PLANS, SEC.S AND DETAILS"

South Mission Beach Lifeguard Station
San Diego, California

A-19

Dominy + Associates Architects @ domusstudio
2150 West Washington, Suite 303
San Diego, California 92110

Tel 619.692.9393
Fax 619.692.9394
domusstudio.com

SPEC. NO. 8147

LICENSED ARCHITECT
WAYNE HOLTAN
No. C12113
REN 9.30.15
STATE OF CALIFORNIA

PLANS FOR THE CONSTRUCTION OF
South Mission Beach Lifeguard Station

Accessibility Notes | A5.01

CITY OF SAN DIEGO, CALIFORNIA
ENGINEERING & CAPITAL PROJECTS
ARCHITECTURAL ENGINEERING & CONTRACTS DIVISION
SHEET 37 OF 94 SHEETS

WBS S-00791

APPROVED: [signature] FOR CITY ENGINEER — DATE 10/13/2014

SUBMITTED BY: JIHAD SLEIMAN, PROJECT MANAGER

DESCRIPTION	BY	APPROVED	DATE	FILMED
ORIGINAL	WH/TT			

YOUSIF BENYAMIN
PROJECT ENGINEER

218-1693
CCS27 COORDINATES

1858-6253
CCS83 COORDINATES

CONTRACTOR ______ DATE STARTED ______
INSPECTOR ______ DATE COMPLETED ______

32849-37-D

Proprietary design: These drawings and design are protected by common law copyright. All patentable material contained herein and originating with Dominy + Associates Architects @ domusstudio LLP shall be the property of Dominy + Associates Architects @ domusstudio LLP

© COPYRIGHT October 13, 2014 at 8:19AM

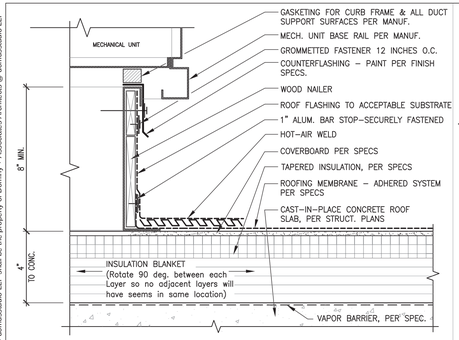

NOTE: METAL EXTENDER PIECE IS REQUIRED IF EXISTING COUNTERFLASHING IS CONTAMINATED AND OR COUNTERFLASHING FASCIA IS LESS THAN 4 INCHES WIDE. FASTENED 12 INCHES O.C. WITH GROMMETTED FASTENER.

17 Mechanical Curb Flashing
3"= 1'–0"

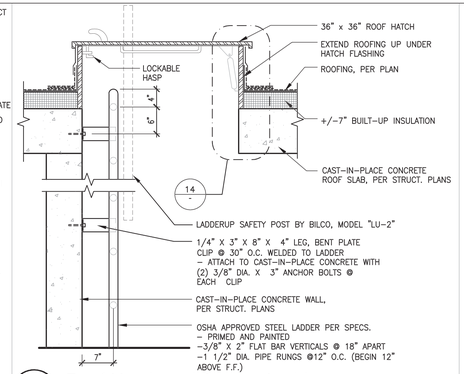

13 Roof Hatch and Access Ladder
3/4"= 1'–0"

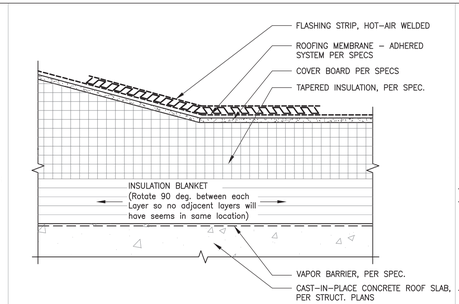

NOTES:
1) WOOD NAILER TO MATCH HEIGHT OF INSULATION MAY BE REQUIRED AT VALLEY IF INSULATION THICKNESS EXCEEDS 2 INCHES.
2) OPTION DETAIL USING SARNAFASTENERS AND SARNADISC SPACING MAY VARY. CONSULT SIKA SARNAFIL TECHNICAL DEPARTMENT.
3) VAPOR BARRIER SHALL BE SEALED AT EDGES.

9 Typical Roof Cricket
3"= 1'–0"

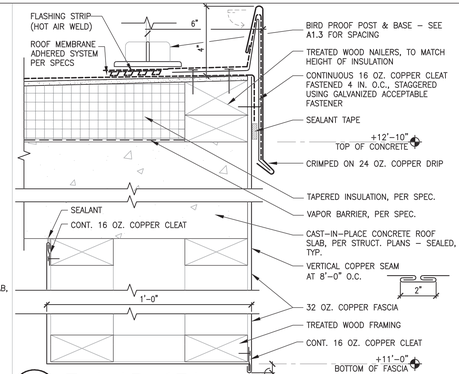

5 Typical Roof Edge
3"= 1'–0"

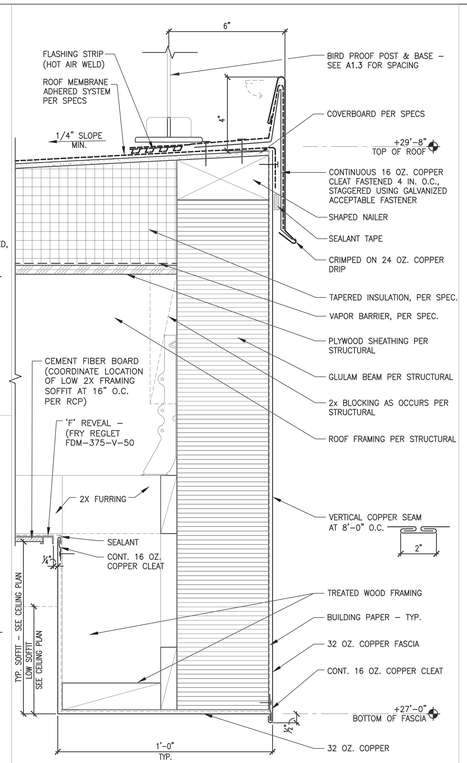

2 Typical Roof Edge at 3rd Level
3"= 1'–0"

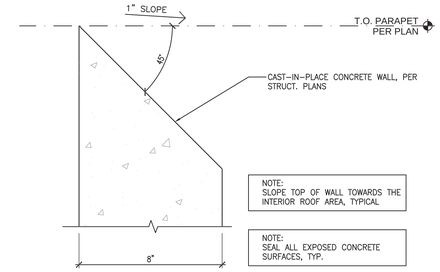

18 Roof Parapet
3"= 1'–0"

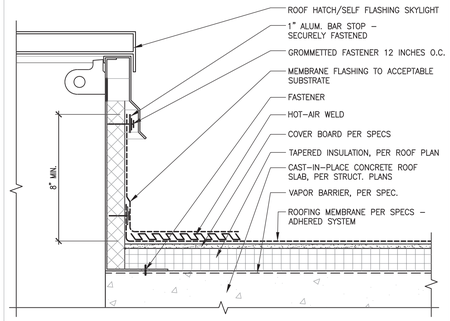

NOTE: METAL EXTENDER PIECE IS REQUIRED IF COUNTERFLASHING IS CONTAMINATED AND OR COUNTERFLASHING FASCIA IS LESS THAN 4 INCHES WIDE. FASTENED 12 INCHES O.C. WITH GROMMETTED FASTENER.

14 Roof Hatch Flashing
3"= 1'–0"

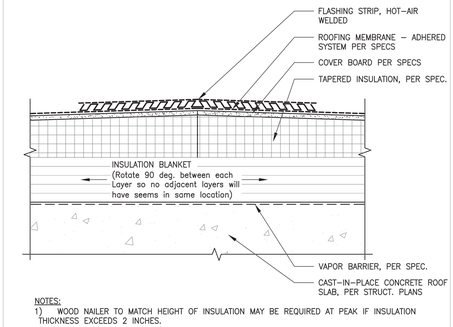

NOTES:
1) WOOD NAILER TO MATCH HEIGHT OF INSULATION MAY BE REQUIRED AT PEAK IF INSULATION THICKNESS EXCEEDS 2 INCHES.
2) OPTION DETAIL USING SARNAFASTENERS AND SARNADISC SPACING MAY VARY. CONSULT SIKA SARNAFIL TECHNICAL DEPARTMENT.

10 Typical Roof Slope Peak
3"= 1'–0"

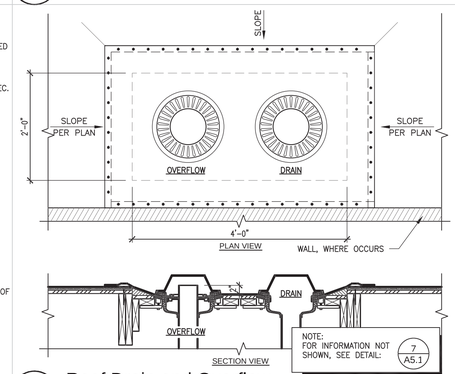

6 Roof Drain and Overflow
3/4"= 1'–0"

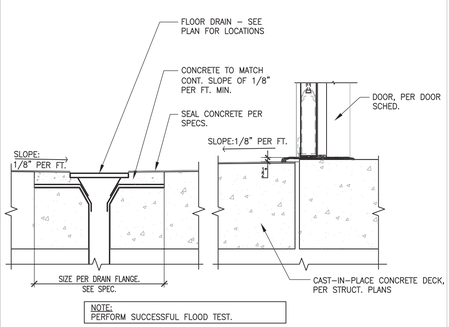

19 Floor Drain
1 1/2"= 1'–0"

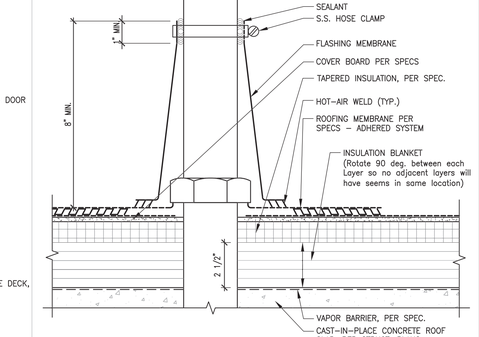

15 Vent Stack Cone Flashing
3"= 1'–0"

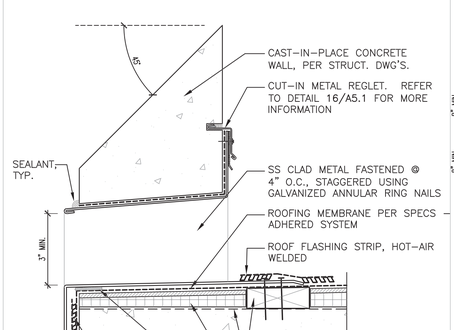

12 Thru-Wall Scupper
3"= 1'–0"

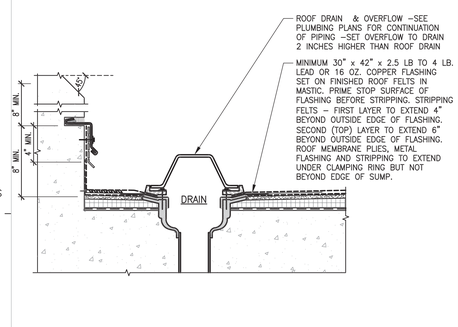

7 Roof Drain / Overflow Section
1–1/2"= 1'–0"

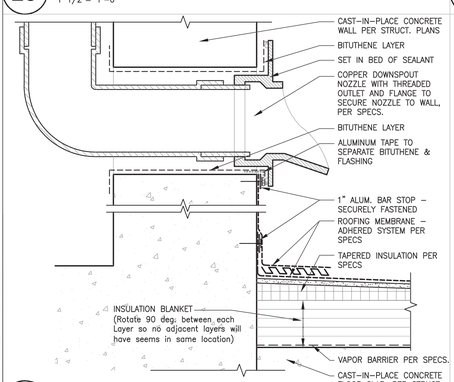

20 Roof Drain Outlet
3"= 1'–0"

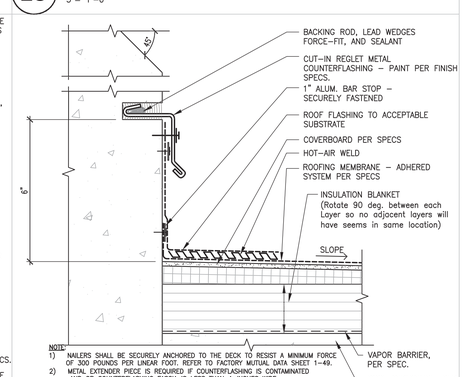

NOTE:
1) NAILERS SHALL BE SECURELY ANCHORED TO THE DECK TO RESIST A MINIMUM FORCE OF 300 POUNDS PER LINEAR FOOT. REFER TO FACTORY MUTUAL DATA SHEET 1–49.
2) METAL EXTENDER PIECE IS REQUIRED IF COUNTERFLASHING IS CONTAMINATED AND OR COUNTERFLASHING FASCIA IS LESS THAN 4–INCHES WIDE.

16 Roof Flashing
3"= 1'–0"

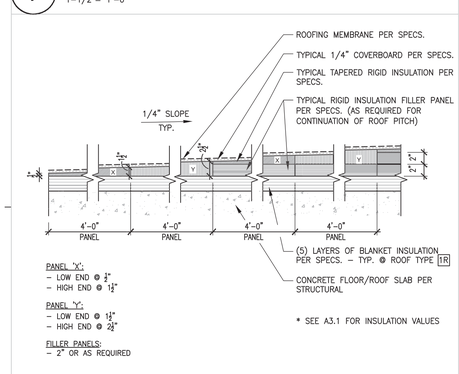

8 Tapered Insulation Assembly - Typ.
1"= 1'–0"

A-20

Dominy + Associates Architects @ domusstudio
2150 West Washington, Suite 303
San Diego, California 92110
Tel 619.692.9393
Fax 619.692.9394
domusstudio.com

SPEC. NO. 8147

LICENSED ARCHITECT – WAYNE POLLARD – No. C12113 – REN 9.30.15 – STATE OF CALIFORNIA

PLANS FOR THE CONSTRUCTION OF

South Mission Beach Lifeguard Station

Details
A5.1

CITY OF SAN DIEGO, CALIFORNIA
ENGINEERING & CAPITAL PROJECTS
ARCHITECTURAL ENGINEERING & CONTRACTS DIVISION
SHEET 38 OF 94 SHEETS

APPROVED: _____ FOR CITY ENGINEER — DATE: 10/13/2014

WBS S-00791

SUBMITTED BY: JIHAD SLEIMAN, PROJECT MANAGER

DESCRIPTION	BY	APPROVED	DATE	FILMED
ORIGINAL	WH/TT			

YOUSIF BENYAMIN, PROJECT ENGINEER
218–1693
CCS27 COORDINATES
1858–6253
CCS83 COORDINATES

CONTRACTOR _____ DATE STARTED _____
INSPECTOR _____ DATE COMPLETED _____

32849–38–D

Proprietary design: These drawings and design are protected by common law copyright. All patentable material contained herein and originating with Dominy + Associates Architects @ domusstudio LLP shall be the property of Dominy + Associates Architects @ domusstudio LLP
© COPYRIGHT October 13, 2014 at 8:10AM

Proprietary design: These drawings and design are protected by common law copyright. All patentable material contained herein and originating with Dominy + Associates Architects @ domusstudio LLP shall be the property of Dominy + Associates Architects @ domusstudio LLP

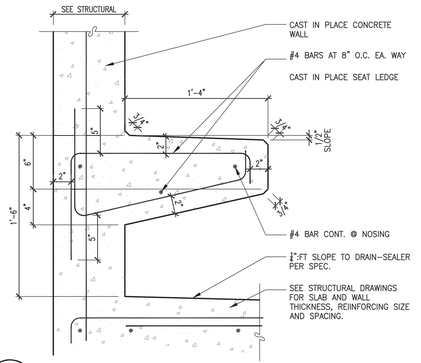

17 Concrete Seat at Foothwash
1 1/2"= 1'-0"

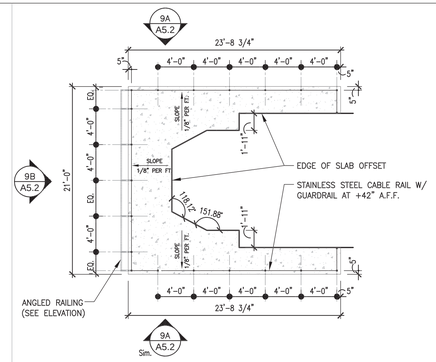

13 Exterior Guardrail at 3rd Floor Deck (Plan)
1/8"= 1'-0"

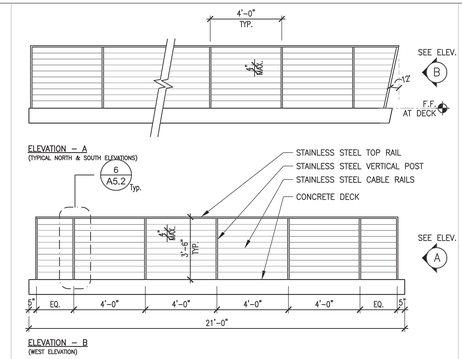

9 Guardrail Elevations @ 3rd Floor Deck
1/4"= 1'-0"

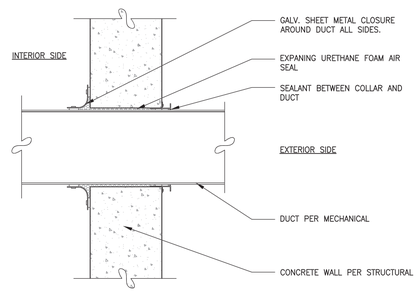

5 Duct Penetration at Exterior Wall
1 1/2"= 1'-0"

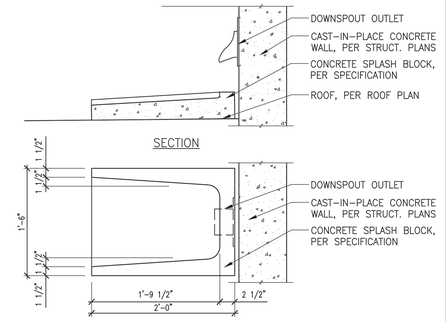

1 Concrete Splash Block
1"= 1'-0"

18

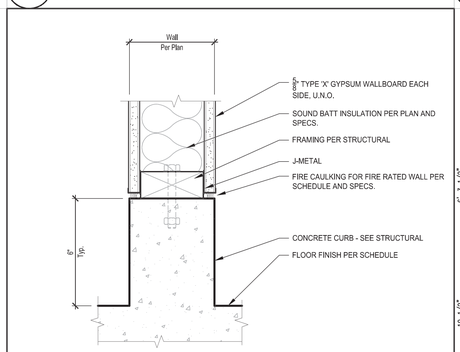

14 Concrete Curb at Framed Walls
3"= 1'-0"

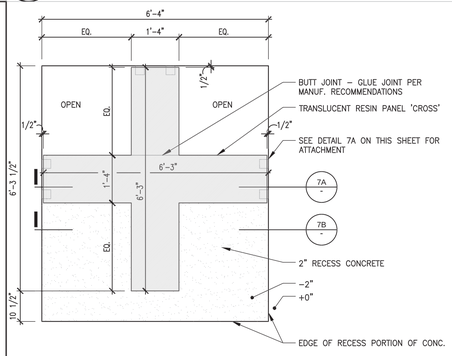

10 First Aid Cross
1/2"= 1'-0"

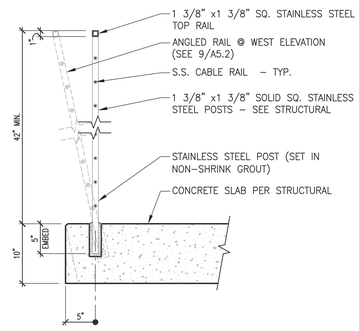

6 Ext. Guardrail at 3rd Floor Deck
1"= 1'-0"

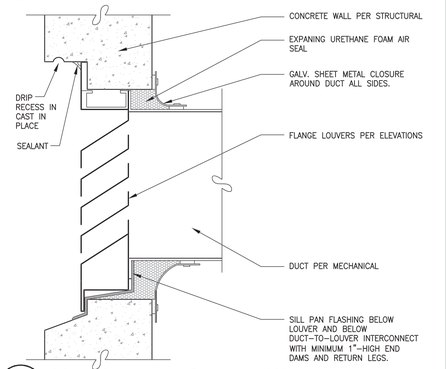

2 Metal Louver at Concrete Wall
1 1/2"= 1'-0"

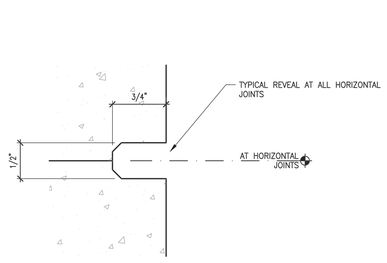

19 Reveal at Horizontal Joints
1" = 1"

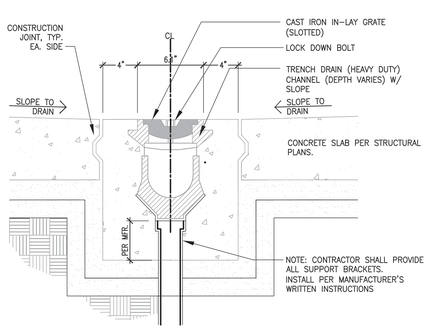

15 Precast Trench Drain at Garage
1 1/2"= 1'-0"

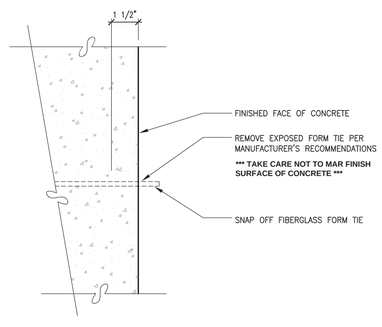

11 Form Tie Hole Treatment
3"= 1'-0"

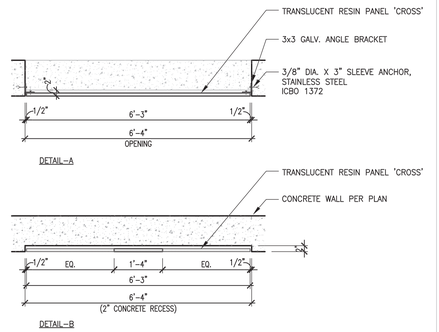

7 First Aid Cross (Sections)
1/2"= 1'-0"

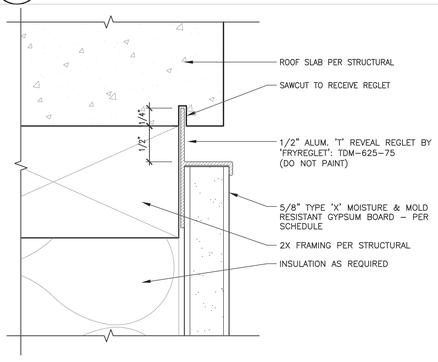

20 Reveal at Gyp. Board and Concrete
1" = 1"

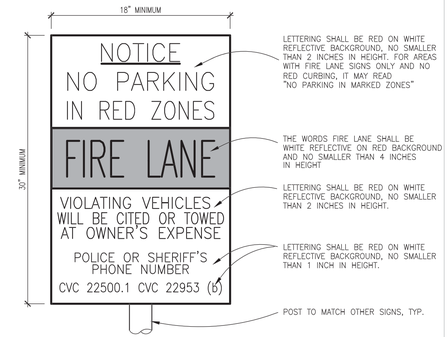

16 Fire Lane Entrance Sign
1 1/2"= 1'-0"
10400-10

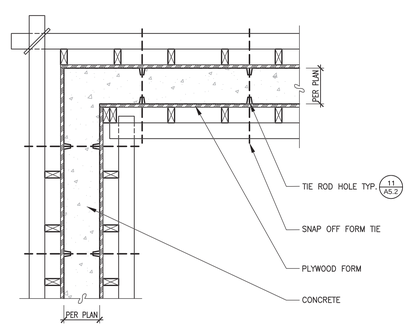

12 Concrete Form Corner Layout
3/4"= 1'-0"

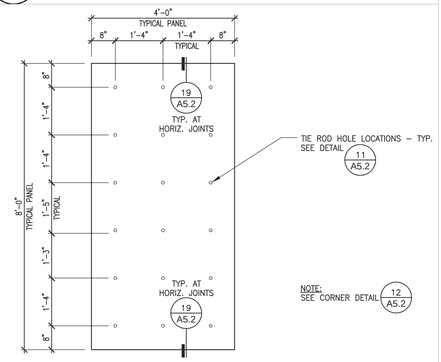

8 Tie Rod Spacing at Exposed Concrete Wall
1/2"= 1'-0""

© COPYRIGHT October 13, 2014 at 8:11AM

A-21

Dominy + Associates Architects @ domusstudio
2150 West Washington, Suite 303
San Diego, California 92110
Tel 619.692.9393
Fax 619.692.9394
domusstudio.com

SPEC. NO. 8147

LICENSED ARCHITECT WAYNE POOLE No. C12113 REN 9.30.15 STATE OF CALIFORNIA

PLANS FOR THE CONSTRUCTION OF

South Mission Beach Lifeguard Station

Details — A5.2

CITY OF SAN DIEGO, CALIFORNIA
ENGINEERING & CAPITAL PROJECTS
ARCHITECTURAL ENGINEERING & CONTRACTS DIVISION
SHEET 39 OF 94 SHEETS

APPROVED: _____ FOR CITY ENGINEER — DATE 10/13/2014

DESCRIPTION	BY	APPROVED	DATE	FILMED
ORIGINAL	WH/TT			

WBS S-00791
SUBMITTED BY: JIHAD SLEIMAN, PROJECT MANAGER
YOUSIF BENYAMIN, PROJECT ENGINEER
218-1693
CCS27 COORDINATES
1858-6253
CCS83 COORDINATES

CONTRACTOR _____ DATE STARTED _____
INSPECTOR _____ DATE COMPLETED _____

32849-39-D

Proprietary design. These drawings and design are protected by common law copyright. All patentable material contained herein and originating with Dominy + Associates Architects @ domusstudio LLP shall be the property of Dominy + Associates Architects @ domusstudio LLP

© COPYRIGHT October 13, 2014 at 8:11AM

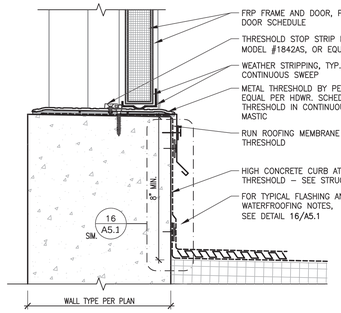

17 Ext. FRP Door Sill at Mech. Entrance

3"= 1'–0"

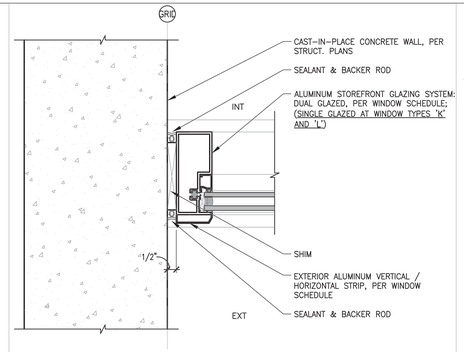

13 Storefront Jamb

3"= 1'–0"

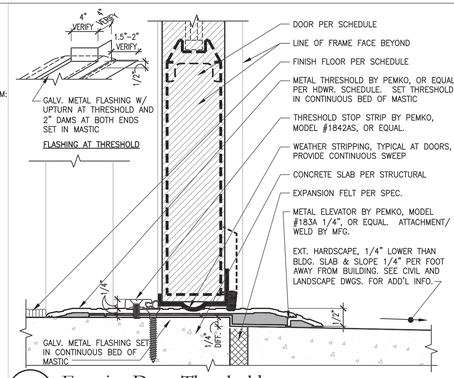

9 Exterior Door Threshold

6"= 1'–0"

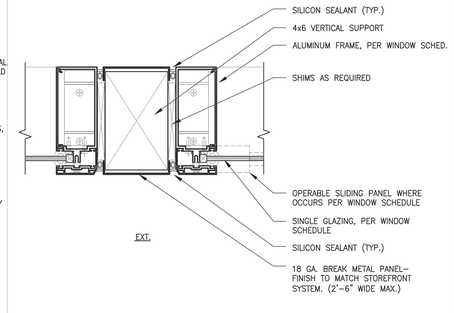

5 Break Metal at Vertical Support

3"= 1'–0"

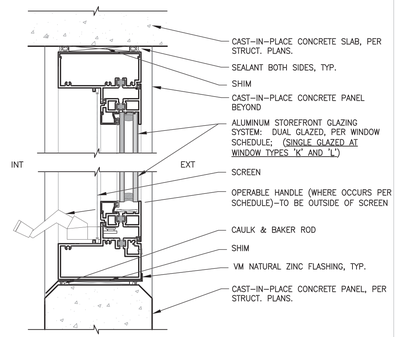

1 Storefront at Cast-In-Place Wall (Sill / Head)

3"= 1'–0"

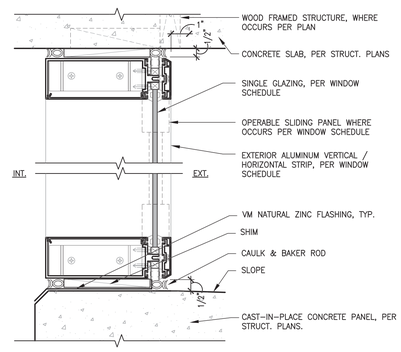

18 Storefront Head-Sill (Single Glaze)

3"= 1'–0" (JAMB SIMILAR)

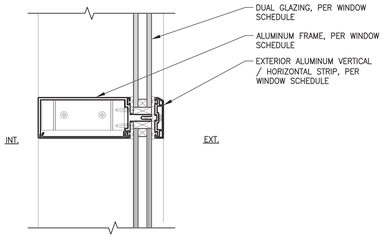

14 Storefront at Horizontal Mullion

3"= 1'–0"

10

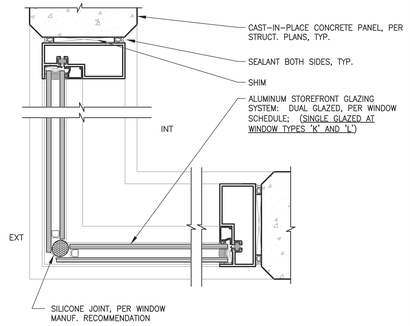

6 Storefront at Mitered Glazing

3"= 1'–0"

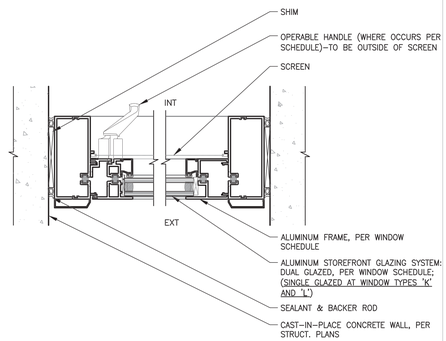

2 Storefront at Cast-In-Place (Jamb)

3"= 1'–0"

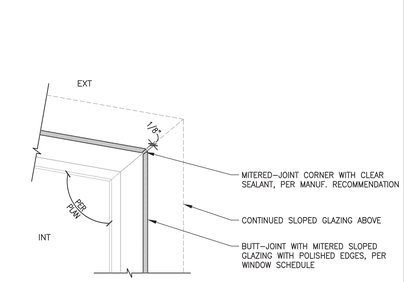

19 Storefront at Mitered Corner (Single Glaze)

3"= 1'–0"

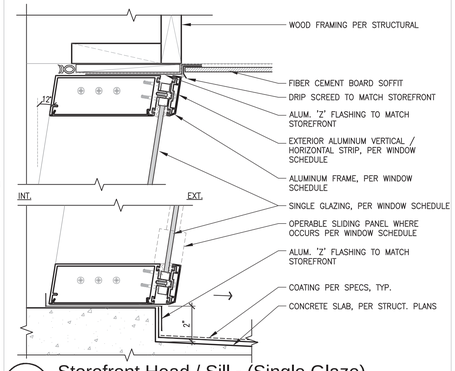

15 Storefront Head / Sill - (Single Glaze)

3"= 1'–0"

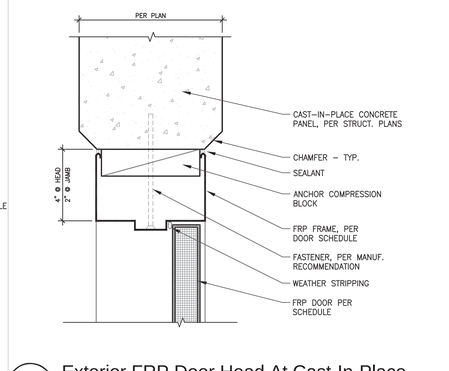

11 Exterior FRP Door Head At Cast-In-Place

3"= 1'–0" (Jamb Similar)

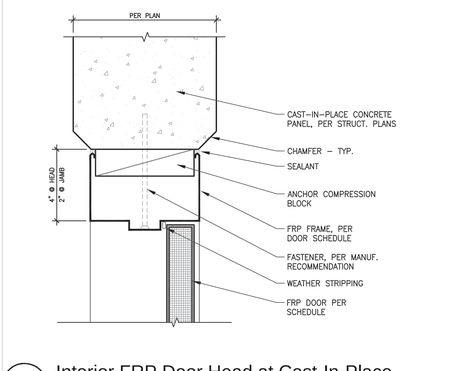

7 Interior FRP Door Head at Cast-In-Place

3"= 1'–0" (Jamb Similar)

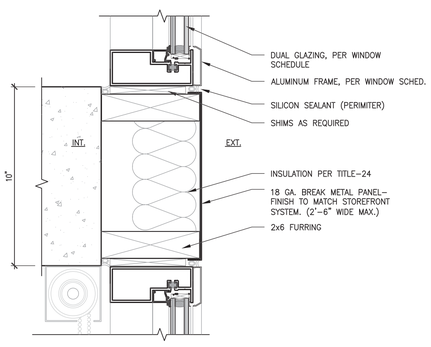

20 Break Metal at Horizontal Mullion

3"= 1'–0"

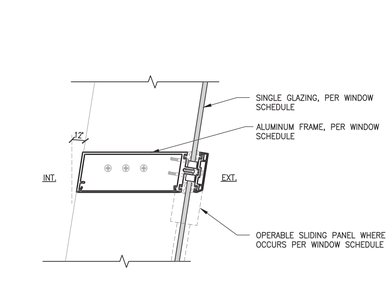

16 Storefront at Horizontal Mullion (Single Glaze)

3"= 1'–0"

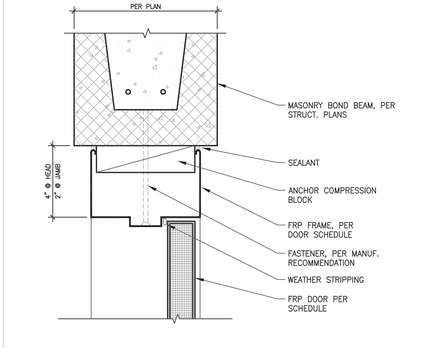

12 Interior FRP Door Head at Masonry

3"= 1'–0" (Jamb Similar)

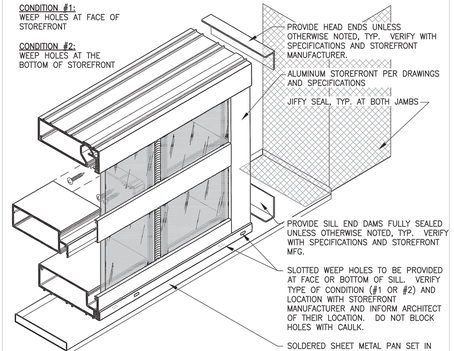

8 Storefront Detail (Sim. For Center Glazed System)

6"= 1'–0"

A-22

Dominy + Associates Architects @ domusstudio
2150 West Washington, Suite 303
San Diego, California 92110

Tel 619.692.9393
Fax 619.692.9394
domusstudio.com

SPEC. NO. 8147

LICENSED ARCHITECT KYLE PATRICK DOMINY No. C12113 REN 9.30.15 STATE OF CALIFORNIA

PLANS FOR THE CONSTRUCTION OF

South Mission Beach Lifeguard Station

Details

A5.3

CITY OF SAN DIEGO, CALIFORNIA
ENGINEERING & CAPITAL PROJECTS
ARCHITECTURAL ENGINEERING & CONTRACTS DIVISION
SHEET 40 OF 94 SHEETS

WBS S-00791

APPROVED: _____ 10/13/2014
FOR CITY ENGINEER — DATE

SUBMITTED BY:
JIHAD SLEIMAN
PROJECT MANAGER

DESCRIPTION	BY	APPROVED	DATE	FILMED
ORIGINAL	WH/TT			

YOUSIF BENYAMIN
PROJECT ENGINEER

218–1693
CCS27 COORDINATES
1858–6253
CCS83 COORDINATES

CONTRACTOR _____ DATE STARTED _____
INSPECTOR _____ DATE COMPLETED _____

32849–40–D

Proprietary design: These drawings and design are protected by common law copyright. All patentable material contained herein and originating with Dominy + Associates Architects @ domusstudio LLP shall be the property of Dominy + Associates Architects @ domusstudio LLP

© COPYRIGHT October 13, 2014 at 8:12AM

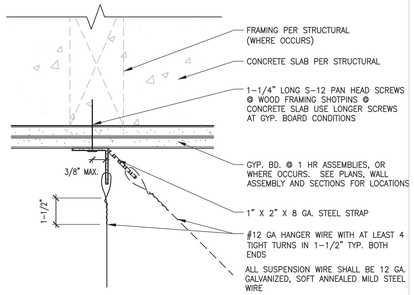

17 Bracing / Hanger Wire Attachment

3"= 1'-0"

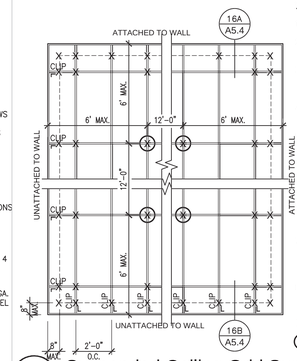

SUSPENDED CEILING NOTES:

1. GRID TO BE HEAVY DUTY
2. GRID TO BE ATTACHED TO TWO ADJACENT WALLS
3. CEILINGS WITHOUT RIGID BRACING MUST HAVE 2" OVERSIZE SPRINKLER TRIM RINGS
4. CEILINGS OVER 2,500 SF MUST HAVE SEISMIC SEPARATION JOINTS
5. VERTICAL HANGER WIRES:
   - SHALL BE 12 GA.
   - NOT GRATER THAN 4'-0" O.C.
   - SHALL BE PLUMB WITIN 1 IN 6
   - TIED WITH THREE TURNS IN 3" MAX.
6. CABLE TRAYS AND CONDUITS SHALL BE INDEPENDENTLY SUPPORTED AND BRACED
7. FIXTURES GREATER THAN 56 LBS. SHALL BEINDEPENDENTLY SUPPORTED AND BRACED FROM BLDG. STRUCTURE
8. BRACING SHALL BE INDEPENDENT OF THE CEILING SPLAY BRACING SYSTEM

X = HANGER WIRE

◯ = LATERAL BRACING (EVERY 12'-0" O.C. OR 144 SF)

13 Suspended Ceiling Grid Support

1/4"= 1'-0"

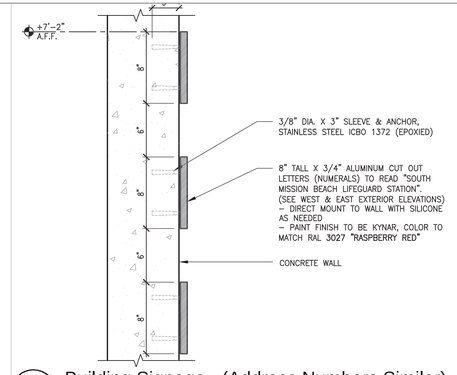

9 Building Signage - (Address Numbers Similar)

1-1/2"= 1'-0"

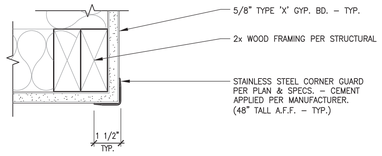

5 Corner Guard

3"= 1'-0"

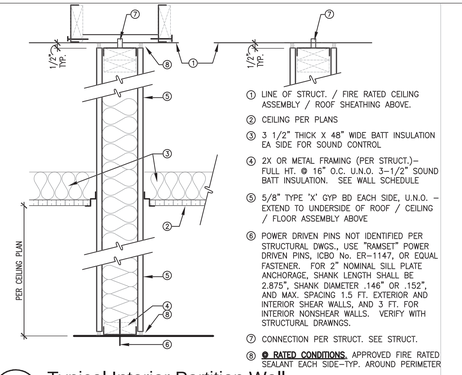

1 Typical Interior Partition Wall

1-1/2"= 1'-0"

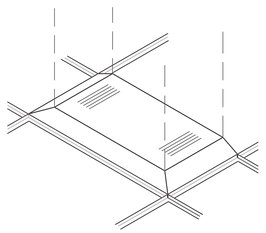

NOTE:

1. FIXTURES WEIGHING <10 LBS. SHALL HAVE (1) 12 GA. SLACK HANGER WIRE CONNECTED FROM THE FIXTURE TO STRUCTURE ABOVE
2. FIXTURES WEIGHING 10 LBS > X < 56 LBS. SHALL HAVE (2) GA. SLACK HANGER WIRES ATTACHED AT OPPOSITE CORNERS OF THE LIGHT FIXTURE TO STRUCTURE ABOVE.
3. FIXTURES >56 LBS. SHALL BE SUPPORTED BY TAUT WIRES DIRECTLY FROM THE STRUCTURE ABOVE. WIRE SHALL BE CAPABLE OF SUPPORTING 4 TIMES THE WEIGHT OF FIXTURE.
4. PENDANT FIXTURES SHALL BE DIRECTLY SUPPORTED FROM STRUCTURE ABOVE USING 9 GA. WIRE OR APPROVED ALTERNATE SUPPORT WITHOUT USING THE CEILING SUSPENSION FOR DIRECT SUPPORT.
5. TANDEM FIXTURES MAY UTILIZE COMMON WIRES.

18 Typical Fixture Support

1" = 1"

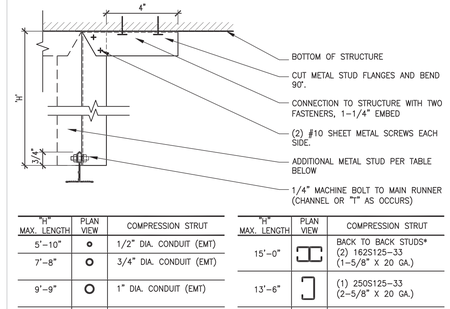

"H" MAX. LENGTH	PLAN VIEW	COMPRESSION STRUT
5'-10"	o	1/2" DIA. CONDUIT (EMT)
7'-8"	O	3/4" DIA. CONDUIT (EMT)
9'-9"	O	1" DIA. CONDUIT (EMT)
12'-0"	⊏	(1) 162S125-33 (1-5/8" X 20 GA.)

"H" MAX. LENGTH	PLAN VIEW	COMPRESSION STRUT
15'-0"	⊏⊐	BACK TO BACK STUDS* (2) 162S125-33 (1-5/8" X 20 GA.)
13'-6"	⊐	(1) 250S125-33 (2-5/8" X 20 GA.)
15'-0"	⊐⊏	BACK TO BACK STUDS* (2) 250S125-33 (2-5/8" X 20 GA.)

* JOINED W/ #10 SHEET METAL SCREWS

14 Compression Strut

N.T.S.

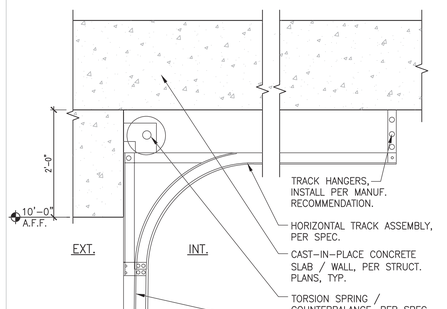

10 Sectional Roll-Up Door (Head)

1-1/2"= 1'-0"

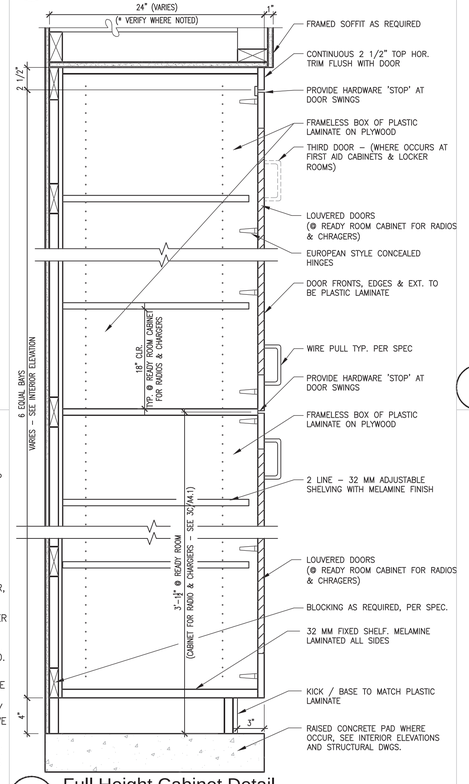

7 Full Height Cabinet Detail

1-1/2"= 1'-0"

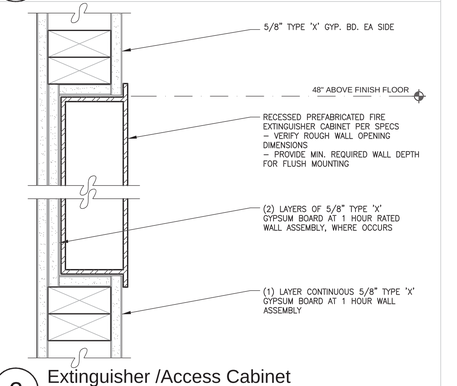

2 Extinguisher /Access Cabinet

3"= 1'-0"

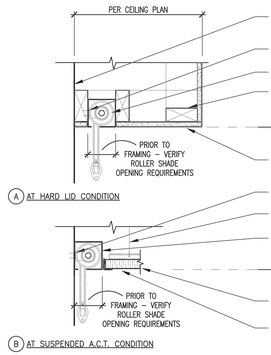

19 Roller Shade - (Recessed)

1-1/2"= 1'-0"

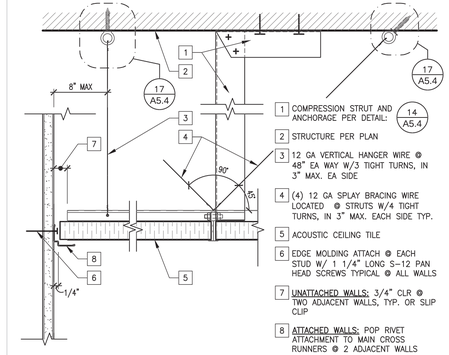

15 Acoustic Tile Ceilng Support

3"= 1'-0"

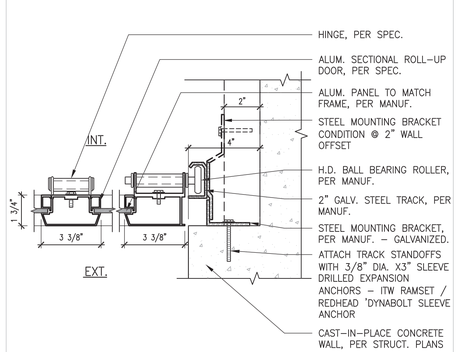

11 Sectional Roll-Up Door (Jamb)

3"= 1'-0"

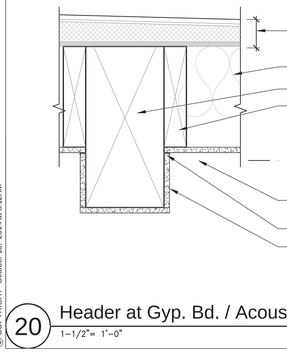

20 Header at Gyp. Bd. / Acoustical Panel

1-1/2"= 1'-0"

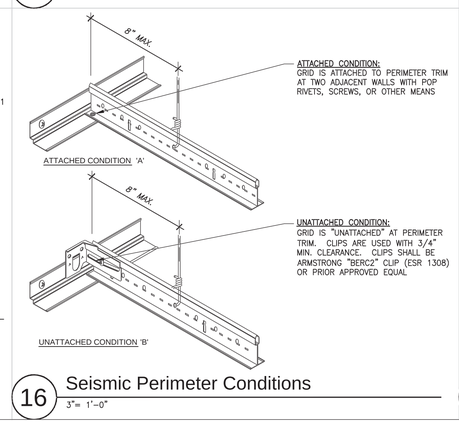

16 Seismic Perimeter Conditions

3"= 1'-0"

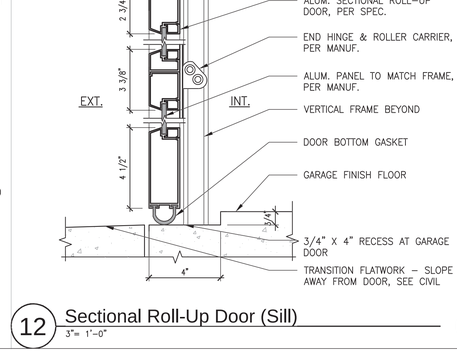

12 Sectional Roll-Up Door (Sill)

3"= 1'-0"

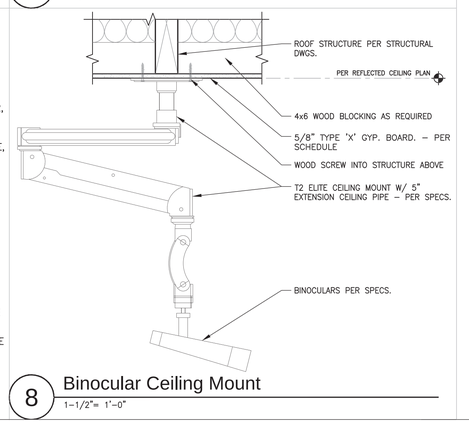

8 Binocular Ceiling Mount

1-1/2"= 1'-0"

A-23

Dominy + Associates Architects @ domusstudio
2150 West Washington, Suite 303
San Diego, California 92110

Tel 619.692.9393
Fax 619.692.9394
domusstudio.com

SPEC. NO. 8147

LICENSED ARCHITECT WAYNE POLLARD No. C12113 REN 9.30.15 STATE OF CALIFORNIA

PLANS FOR THE CONSTRUCTION OF

South Mission Beach Lifeguard Station

Details

A5.4

CITY OF SAN DIEGO, CALIFORNIA
ENGINEERING & CAPITAL PROJECTS
ARCHITECTURAL ENGINEERING & CONTRACTS DIVISION
SHEET 41 OF 94 SHEETS

WBS S-00791

APPROVED: _____ FOR CITY ENGINEER

10/13/2014 DATE

SUBMITTED BY: JIHAD SLEIMAN PROJECT MANAGER

DESCRIPTION	BY	APPROVED	DATE	FILMED
ORIGINAL	WH/TT			

YOUSIF BENYAMIN PROJECT ENGINEER

218-1693 CCS27 COORDINATES

1858-6253 CCS83 COORDINATES

CONTRACTOR _____ DATE STARTED _____
INSPECTOR _____ DATE COMPLETED _____

32849-41-D

Proprietary design. These drawings and design are protected by common law copyright. All patentable material contained herein and originating with Dominy + Associates Architects @ domusstudio LLP shall be the property of Dominy + Associates Architects @ domusstudio LLP

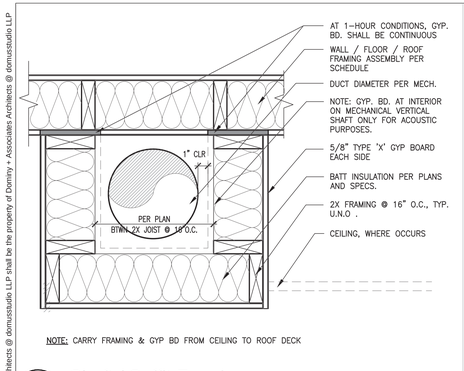

NOTE: CARRY FRAMING & GYP BD FROM CEILING TO ROOF DECK

17 Shaft / Soffit Framing
3"= 1'-0"

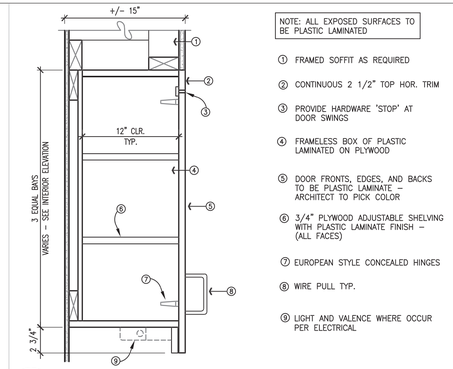

NOTE: ALL EXPOSED SURFACES TO BE PLASTIC LAMINATED

1. FRAMED SOFFIT AS REQUIRED
2. CONTINUOUS 2 1/2" TOP HOR. TRIM
3. PROVIDE HARDWARE 'STOP' AT DOOR SWINGS
4. FRAMELESS BOX OF PLASTIC LAMINATED ON PLYWOOD
5. DOOR FRONTS, EDGES, AND BACKS TO BE PLASTIC LAMINATE – ARCHITECT TO PICK COLOR
6. 3/4" PLYWOOD ADJUSTABLE SHELVING WITH PLASTIC LAMINATE FINISH – (ALL FACES)
7. EUROPEAN STYLE CONCEALED HINGES
8. WIRE PULL TYP.
9. LIGHT AND VALENCE WHERE OCCUR PER ELECTRICAL

13 Upper Cabinets with Doors
1 1/2"= 1'-0" — 06200-01

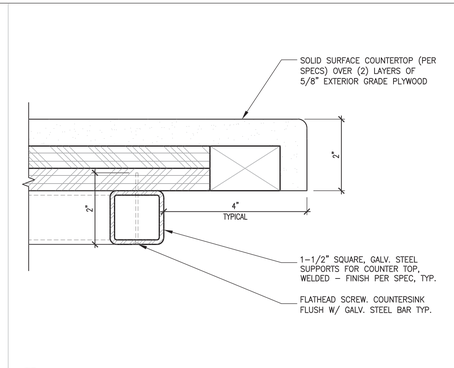

9 Typical Counter (Front / Side Edge)
6"= 1'-0" — workcounter edges

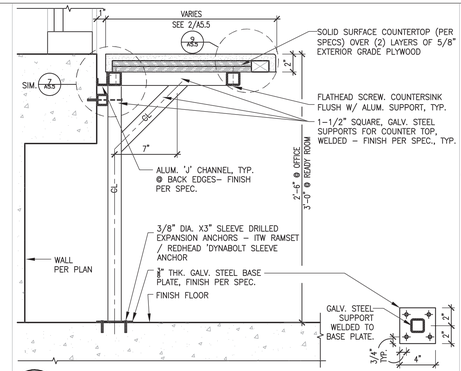

5 Typical Work Counter
1 1/2"= 1'-0" — workcounter

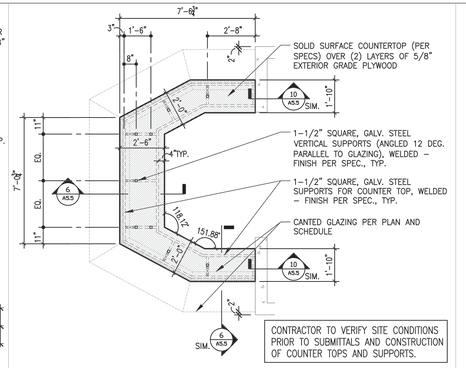

1 Oberservation Work Counter (Plan)
1/4"= 1'-0"

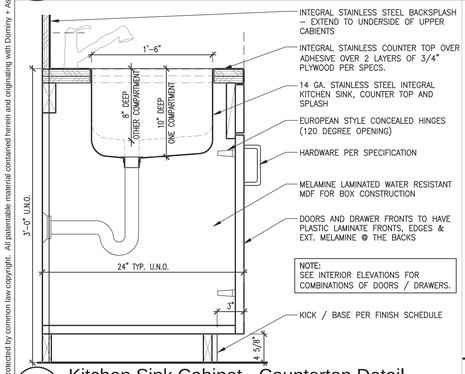

18 Kitchen Sink Cabinet - Countertop Detail
1-1/2"= 1'-0"

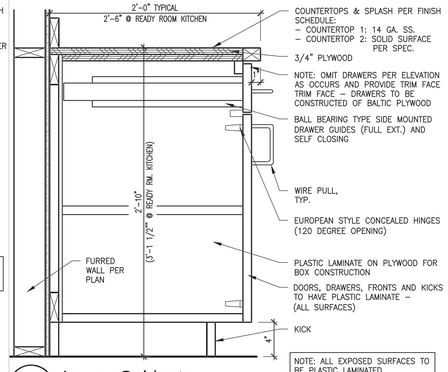

14 Lower Cabinets
1 1/2"= 1'-0" — 06200-03

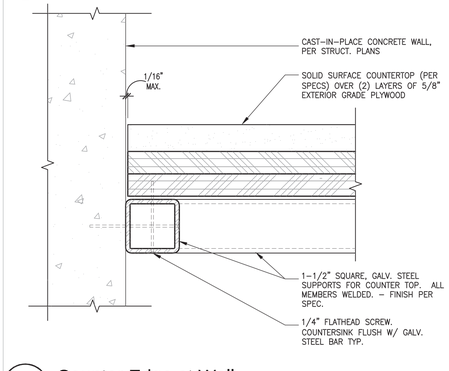

10 Counter Edge at Wall
6"= 1'-0" — workcounter rear edge

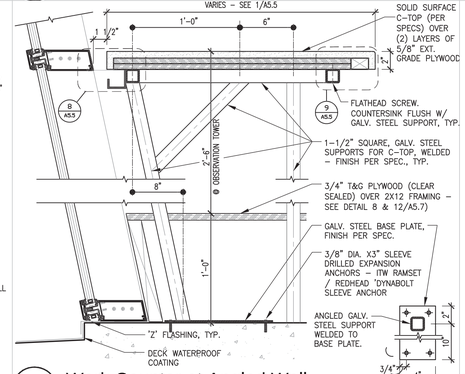

6 Work Counter at Angled Wall
1 1/2"= 1'-0" — workcounter

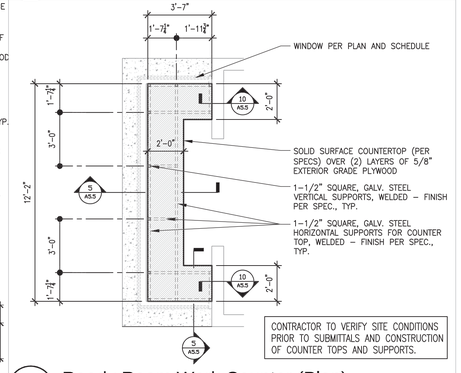

2 Ready Room Work Counter (Plan)
1/4"= 1'-0"

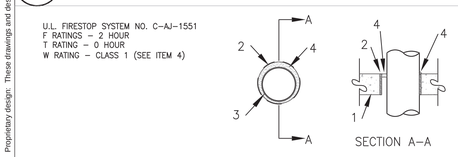

1. FLOOR OR WALL ASSEMBLY – MIN 2–1/2 IN. (64 MM) THICK REINFORCED LIGHTWEIGHT OR NORMAL WEIGHT (100–150 PCF OR 1600–2400 KG/M) CONCRETE FLOORS OR MIN 3–1/2" (89 MM) THICK REINFORCED LIGHTWEIGHT OR NORMAL WEIGHT CONCRETE WALLS. FLOOR ASSEMBLY MAY ALSO BE CONSTRUCTED OF ANY MIN 6 IN. (152 MM) THICK UL CLASSIFIED HOLLOW–CORE PRECAST CONCRETE UNITS. WALL MAY ALSO BE CONSTRUCTED OF ANY UL CLASSIFIED CONCRETE BLOCKS. MAX DIA. OF OPENING 28 IN. (711 MM). MAX DIA. OF OPENING IN FLOORS CONSTRUCTED OF HOLLOW–CORE CONRETE IS 7 IN. (78 MM). SEE CONCRETE BLOCKS (CAZT) AND PRECAST CONCRETE UNITS (CFTV) CATEGORIES IN FIRE RESISTANCE DIRECTORY FOR NAMES OF MANUFACTURERS.
2. STEEL SLEEVE – (OPTIONAL) – NOM 28 IN. (711 MM) DIA. (OR SMALLER) SCHEDULE 10 (OR HEAVIER) STEEL SLEEVE CAST OR GROUTED INTO FLOOR OR WALL ASSEMBLY. STEEL SLEEVE MAY BE INSTALLED FLUSH OR MAY PROJECT MAX. 2 IN. (51 MM) BEYOND THE FLOOR OR WALL SURFACES.
3. THROUGH PENETRANT – ONE METALLIC PIPE, CONDUIT, TUBING OR FLEXIBLE METAL PIPING INSTALLED CONCENTRICALLY OR ECCENTRICALLY WITHIN OPENING. ANNULAR SPACE BETWEEN PENETRANT AND PERIPHERY OF OPENING OR SLEEVE SHALL BE MIN OF 0 IN. (0MM, POINT OF CONTACT) TO MAX. 3–7/8 IN. (98 MM). PENETRANT TO BE RIGIDLY SUPPORTED ON BOTH SIDES OF FLOOR OR WALL ASSEMBLY. THE FOLLOWING TYPES AND SIZES OF PENETRANTS MAY BE USED:
   A. STEEL PIPE – NOM. 24 IN. (610 MM) DIA. (OR SMALLER) SCHEDULE 10 (OR HEAVIER) STEEL PIPE.
   B. IRON PIPE – NOM. 24 IN.C (610 MM) DIA. (OR SMALLER) CAST OR DUTILE IRON PIPE.
   C. CONDUIT – NOM. 6 IN. (152 MM) DIA. (OR SMALLER) STEEL CONDUIT OR NOM 4 IN. (102 MM) DIA. (OR SMALLER) STEEL ELECTRICAL METALLIC TUBING.
   D. COPPER TUBING – NOM. 6 IN. (152 MM) DIA. (OR SMALLER) TYPE L (OR HEAVIER COPPER TUBING).
   E. COPPER PIPE – NOM. 6 IN. (152 MM) DIA. (OR SMALLER) REGULAR (OR HEAVIER COPPER PIPE.
   F. THROUGH PENETRATING PRODUCT – FLEXIBLE METAL PIPING – THE FOLLOWING TYPES OF STEEL FLEXIBLE METAL GAS PIPING MAY BE USED:
      OMEGA FLEX INC.
      1) NOM. 2 IN. (51 MM) DIA. (OR SMALLER) STEEL FLEXIBLE METAL GAS PIPING. PLASTIC COVERING ON PIPING MAY OR MAY NOT BE REMOVED ON BOTH SIDES OF FLOOR OR WALL ASSEMBLY.
      GASTITE, DIV. OF TITEFLEX
      2) NOM. 1 IN. (25 MM) DIA. (OR SMALLER) STEEL FLEXIBLE METAL GAS PIPING. PLASTIC COVERING ON PIPING MAY OR MAY NOT BE REMOVED ON BOTH SIDES OF FLOOR OR WALL ASSEMBLY.
      WARD MFG. INC.
      3) NOM. 1 IN. (25 MM) DIA. (OR SMALLER) STEEL FLEXIBLE METAL GAS PIPING. PLASTIC COVERING ON PIPING MAY OR MAY NOT BE REMOVED ON BOTH SIDES OF FLOOR OR WALL ASSEMBLY.
4. FIRESTOP SYSTEM – THE DETAILS OF THE FIRESTOP SYSTEM SHALL BE AS FOLLOWS:
   A. PACKING MATERIAL – (OPTIONAL, NOT SHOWN) – PLYETHYLENE BACKER ROD OR MIN. 1 IN.C (25 MM) THICKNESS OF MIN. 4 PCF (64 KG/M) MINERAL WOOL BATT INSULATION FIRMLY PACKED INTO OPENING AS A PERMANENT FORM. PACKING MATERIAL TO BE RECESSED FROM TOP SURFACE OF FLOOR OR FROM BOTH SURFACES OF WALL AS REQUIRED TO ACCOMMODATE THE REQUIRED THICKNESS OF FILL MATERIAL. IN FLOORS CONSTRUCTED OF HOLLOW–CORE CONCRETE, PACKING MATERIAL TO BE RECESSED FROM TOP AND BOTTOM SURFACES OF FLOOR AS REQUIRED TO ACCOMMODATE THE REQUIRED THICKNESS OF FILL MATERIAL.
   B. FILL, VOID OR CAVITY MATERIALS – CAULK OR SEALANT – MIN. 1 IN. (25 MM) THICKNESS OF CAULK APPLIED WITHIN THE ANNULUS, FLUSH WITH TOP SURFACE OF FLOOR OR WITH BOTH SURFACES OF WALL. IN FLOORS CONSTRCUTED OF HOLLOW–CORE CONCRETE, MIN 1 IN. (25 MM) THICKNESS OF CAULK APPLIED WITHIN THE ANNULUS, FLUSH WITH TOP AND BOTTOM SURFACES OF FLOOR. MIN. 1/4 IN. (6 MM) DIA. BEAD OF CAULK APPLIED TO THE PENETRANT/CONCRETE OR PENETRANT/SLEEVE INTERFACE AT THE POINT OF CONTACT LOCATION ON THE TOP SURFACE OF FLOOR OR BOTH SURFACES OF WALL OR HOLLOW–CORE FLOOR.

20 2 HR. Firestop For Various Size Metallic Pipe Thru Concrete Wall / CMU Wall
1"= 1'-0""

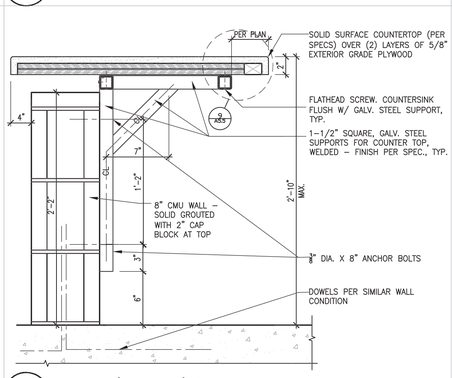

15 Reception Work Counter
1 1/2"= 1'-0" — workcounter

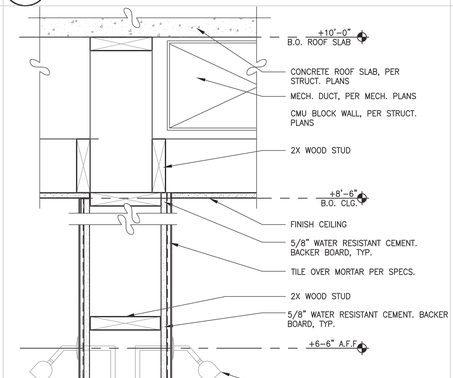

12

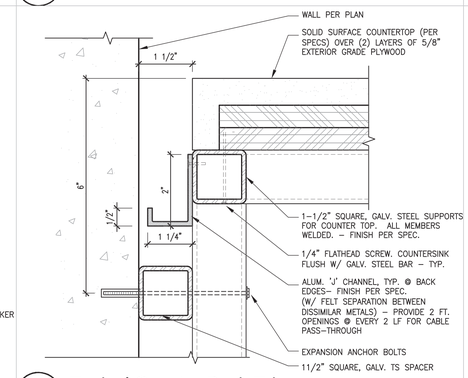

7 Typical Counter Back Edge
6"= 1'-0" — workcounter rear edge

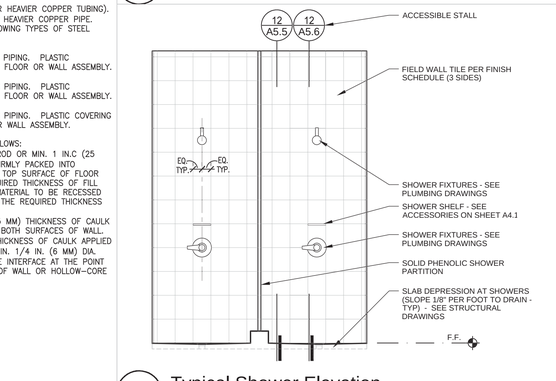

16 Typical Shower Elevation
1/2"= 1'-0""

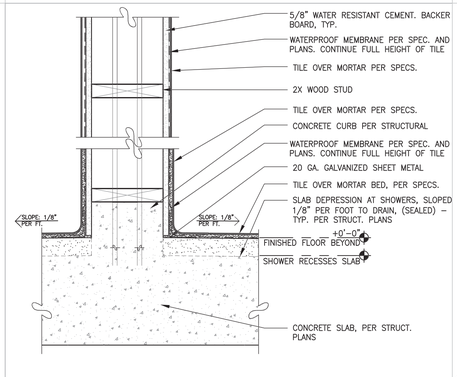

8 Coutner Back Edge at Angled Glazing
6"= 1'-0" — workcounter rear edge

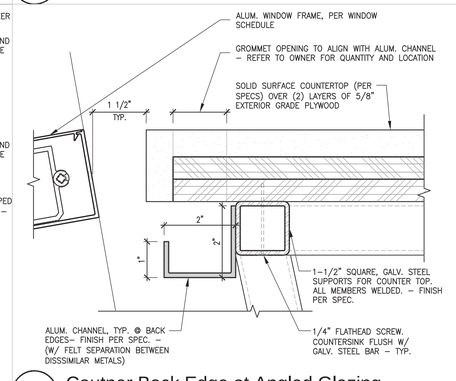

11 Counter Back Edge at Angled Glazing
6"= 1'-0" — workcounter rear edge

© COPYRIGHT October 13, 2014 at 8:13AM

A-24

Dominy + Associates Architects @ domusstudio
2150 West Washington, Suite 303
San Diego, California 92110
Tel 619.692.9393
Fax 619.692.9396
domusstudio.com

SPEC. NO. 8147

LICENSED ARCHITECT WAYNE POLTL No. C10117 REN 9.30.15 STATE OF CALIFORNIA

PLANS FOR THE CONSTRUCTION OF

South Mission Beach Lifeguard Station

Details — A5.5

CITY OF SAN DIEGO, CALIFORNIA
ENGINEERING & CAPITAL PROJECTS
ARCHITECTURAL ENGINEERING & CONTRACTS DIVISION
SHEET 42 OF 94 SHEETS

WBS S-00791

APPROVED: FOR CITY ENGINEER — DATE 10/13/2014

SUBMITTED BY: JIHAD SLEIMAN, PROJECT MANAGER

DESCRIPTION	BY	APPROVED	DATE	FILMED
ORIGINAL	WH/TT			

YOUSIF BENYAMIN, PROJECT ENGINEER

218–1693
CCS27 COORDINATES
1858–6253
CCS83 COORDINATES

CONTRACTOR _____ DATE STARTED _____
INSPECTOR _____ DATE COMPLETED _____

32849–42–D

Proprietary design. These drawings and design are protected by common law copyright. All patentable material contained herein and originating with Dominy + Associates Architects @ domusstudio LLP shall be the property of Dominy + Associates Architects @ domusstudio LLP

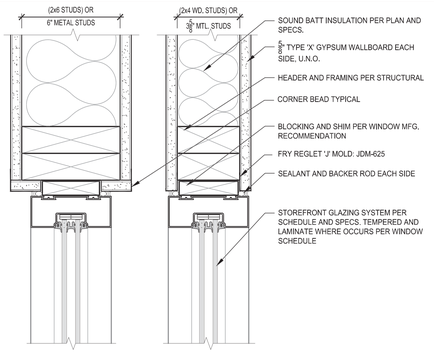

17 Interior Storefront Window Head-Jamb (Typ.)
3"= 1'-0"

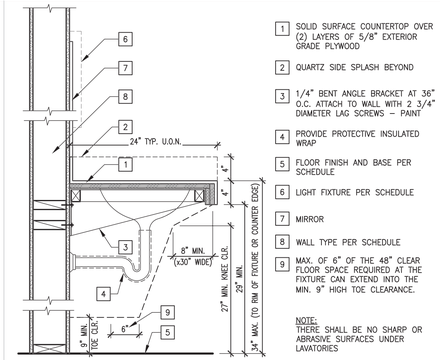

13 Lavatory & Locker Room Counter
NTS

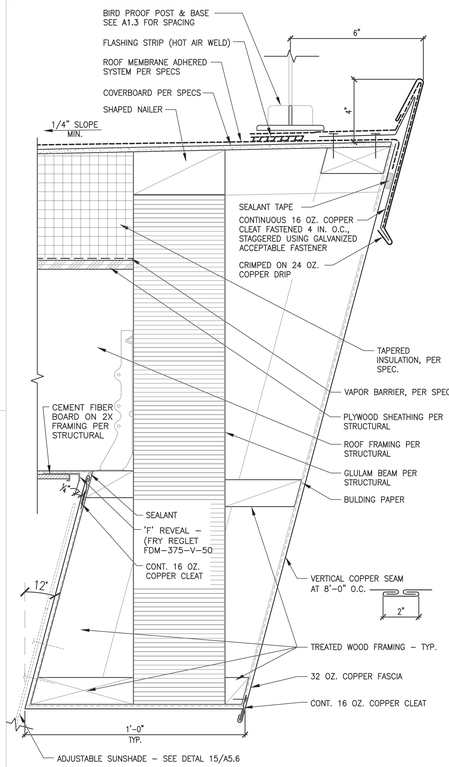

10 Typical Roof Edge at 3rd Level (Angled)
3"= 1'-0"

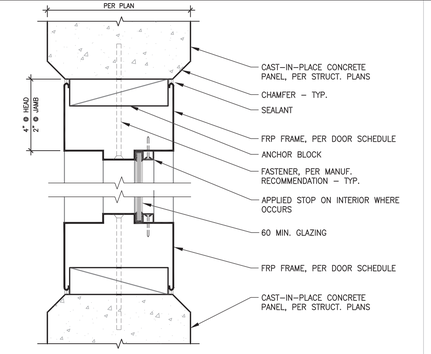

5 Interior FRP Window
3"= 1'-0" (Jamb Similar)

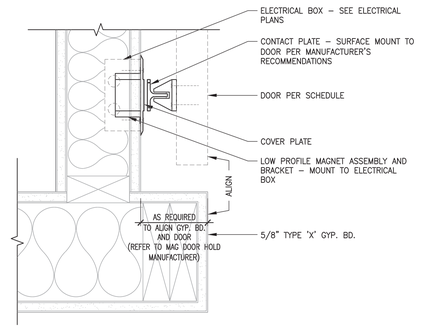

1 Electromagnetic Door Holder
3"= 1'-0"

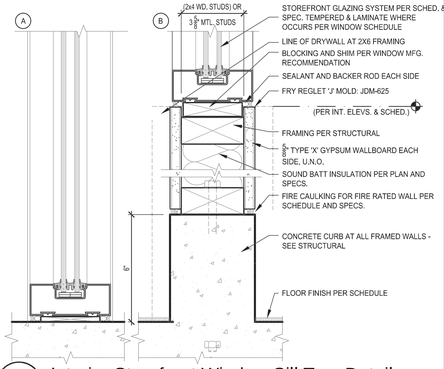

18 Interior Storefront Window Sill Typ. Detail
3"= 1'-0"

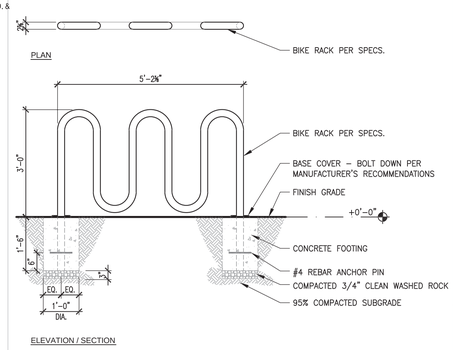

14 Bicycle Rack
1/2"= 1'-0"

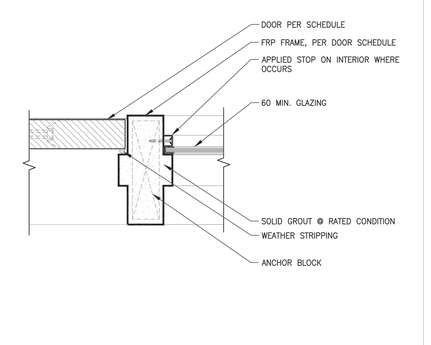

6 Interior Door-Window Jamb (Head Sim.)
3"= 1'-0"

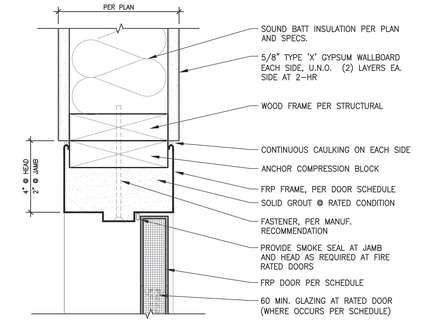

2 Int. Door Hd & Jmb (1-Hr Rated as Occurs)
3"= 1'-0"

19

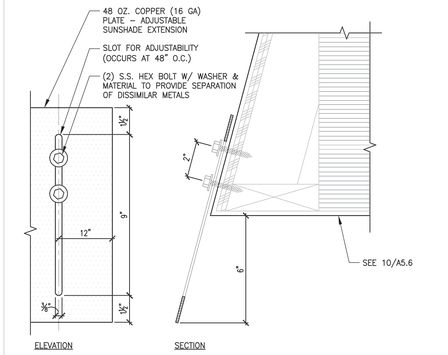

15 Sunshade Extension
3"= 1'-0"

20

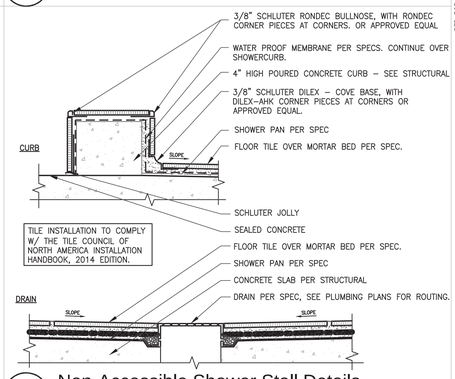

16 Non-Accessible Shower Stall Details
3"= 1'-0"

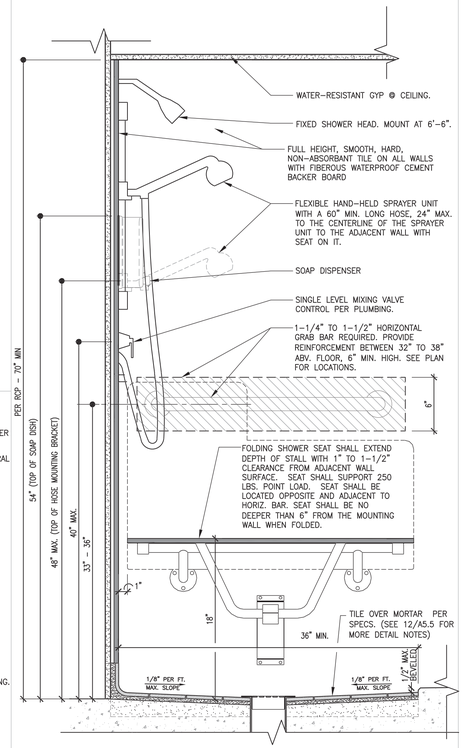

12 Accessible Shower Entry Section
1-1/2"= 1'-0"

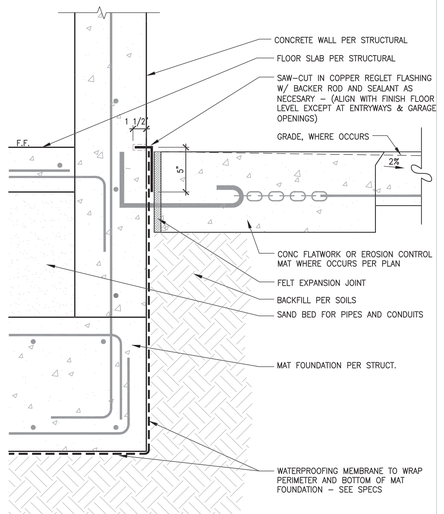

8 Below Wall Waterproofing
1 1/2"= 1'-0"

A-25

Dominy + Associates Architects @ domusstudio
2150 West Washington, Suite 303
San Diego, California 92110
Tel 619.692.9393
Fax 619.692.9394
domusstudio.com

SPEC. NO. 8147

LICENSED ARCHITECT JOANNE POLLACK No. C12113 REN 9.30.15 STATE OF CALIFORNIA

PLANS FOR THE CONSTRUCTION OF

South Mission Beach Lifeguard Station

Details — A5.6

CITY OF SAN DIEGO, CALIFORNIA
ENGINEERING & CAPITAL PROJECTS
ARCHITECTURAL ENGINEERING & CONTRACTS DIVISION
SHEET 43 OF 94 SHEETS

APPROVED: _____ 10/13/2014
FOR CITY ENGINEER — DATE

DESCRIPTION	BY	APPROVED	DATE	FILMED
ORIGINAL	WH/TT			

WBS S-00791
SUBMITTED BY: JIHAD SLEIMAN, PROJECT MANAGER
YOUSIF BENYAMIN, PROJECT ENGINEER
218-1693
CCS27 COORDINATES
1858-6253
CCS83 COORDINATES

CONTRACTOR _____ DATE STARTED _____
INSPECTOR _____ DATE COMPLETED _____

32849-43-D

© COPYRIGHT October 13, 2014 at 8:13AM

© COPYRIGHT October 13, 2014 at 8:14AM
Proprietary design. These drawings and design are protected by common law copyright. All patentable material contained herein and originating with Dominy + Associates Architects @ domusstudio LLP shall be the property of Dominy + Associates Architects @ domusstudio LLP

17

13

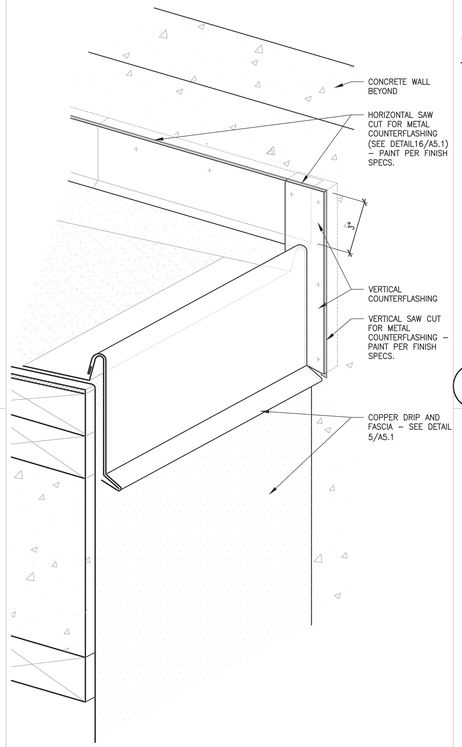

10 Roof Edge to Wall Termination
NTS

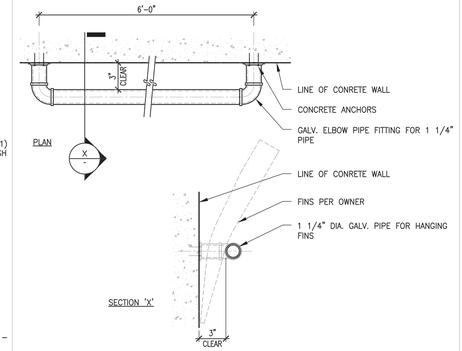

5 Horizontal Pipe Bars for Hanging Fins
1 1/2"= 1'–0"

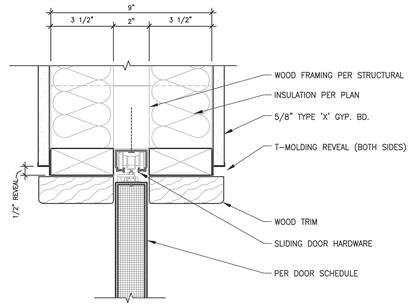

6 Pocket Door - (Head)
3"= 1'–0"

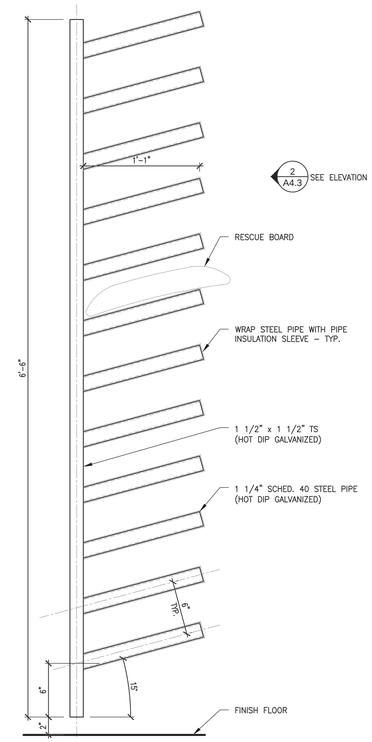

2 Rescue Board Rack
1 1/2"= 1'–0"

18

14

19

15

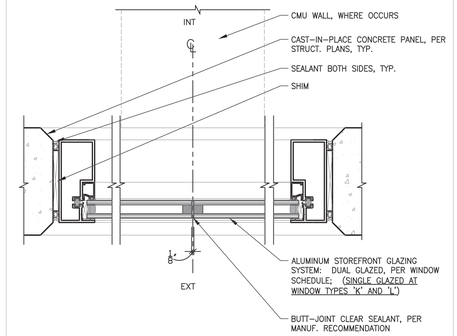

11 Storefront at Butt-Joint Glazing
3"= 1'–0"

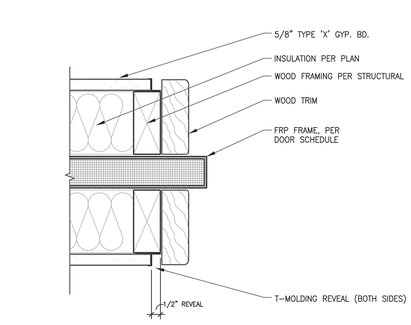

7 Pocket Door - (Jamb)
3"= 1'–0"

20

16

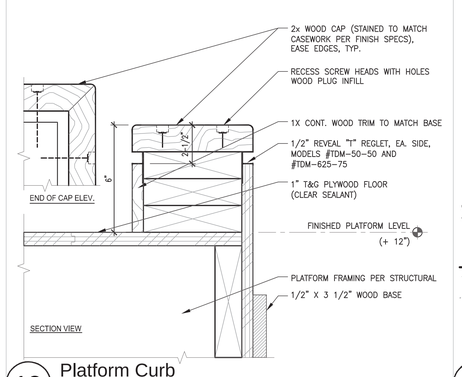

12 Platform Curb
3"= 1'–0"

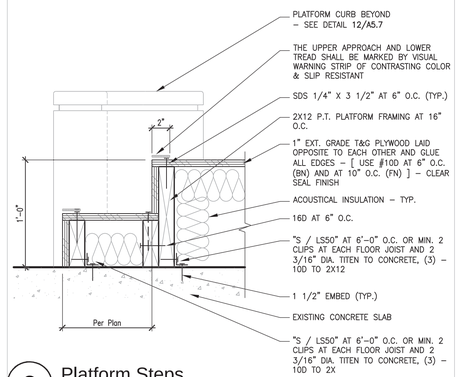

8 Platform Steps
1 1/2"= 1'–0"

A-26

Dominy + Associates Architects @ domusstudio
2150 West Washington, Suite 303
San Diego, California 92110

Tel 619.692.9393
Fax 619.692.9394
domusstudio.com

SPEC. NO. 8147

LICENSED ARCHITECT JEROME POOLE No. C12113 REN 9.30.15 STATE OF CALIFORNIA

PLANS FOR THE CONSTRUCTION OF

South Mission Beach Lifeguard Station

Details

A5.7

CITY OF SAN DIEGO, CALIFORNIA
ENGINEERING & CAPITAL PROJECTS
ARCHITECTURAL ENGINEERING & CONTRACTS DIVISION
SHEET 44 OF 94 SHEETS

WBS S-00791

APPROVED: _____ FOR CITY ENGINEER
10/13/2014 DATE

SUBMITTED BY:
JIHAD SLEIMAN
PROJECT MANAGER

DESCRIPTION	BY	APPROVED	DATE	FILMED
ORIGINAL	WH/TT			

YOUSIF BENYAMIN
PROJECT ENGINEER

218–1693
CCS27 COORDINATES

1858–6253
CCS83 COORDINATES

CONTRACTOR _____ DATE STARTED _____
INSPECTOR _____ DATE COMPLETED _____

32849–44–D

Proprietary design. These drawings and design are protected by common law copyright. All patentable material contained herein and originating with Dominy + Associates Architects @ domusstudio LLP shall be the property of Dominy + Associates Architects @ domusstudio LLP

Door Types

1/4" = 1'-0"

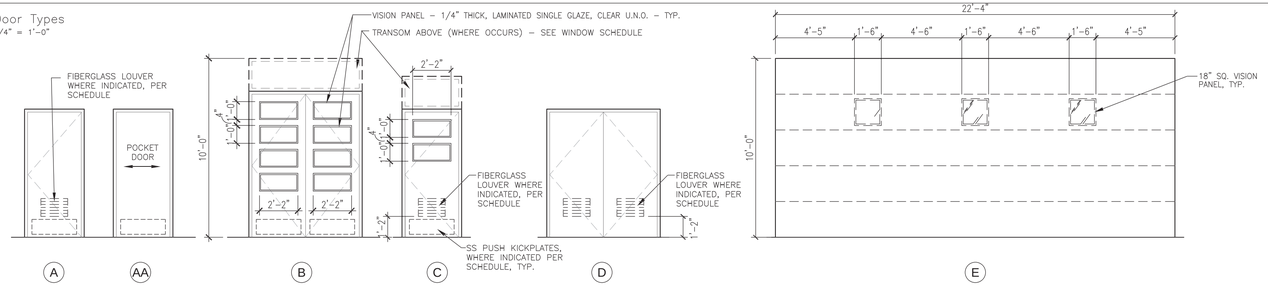

Commericial Finish Notes

1. VERIFY ALL CARPET AND/OR OTHER FLOOR MATERIALS, SEAMS AND/OR JOINTS LAYOUT WITH ARCHITECT PRIOR TO INSTALLATION.
2. ALL COLORS SHALL BE SELECTED BY ARCHITECT (I.E. PLASTIC LAMINATE, HARDWARE, PAINT, CARPET TILE, ETC.) AND VERIFIED IN WRITING WITH ARCHITECT PRIOR TO ORDERING.
3. FLOOR AND BASE MATERIAL SHALL CONTINUE INTO ADJACENT UNSCHEDULED CLOSETS AND SERVICE ROOMS TO MATCH MATERIAL AT SCHEDULED ROOMS.
4. INSTALL AND PAINT INTERIOR GYP. BOARD IN ALL UNSCHEDULED CLOSETS AND SERVICE ROOMS.
5. CONTRACTOR SHALL USE PREFORMED VINYL BASE CORNER AT ALL CORNERS BY APPROVED MANUFACTURERS WHERE VINYL BASE IS SCHEDULED.
6. UNLESS OTHERWISE NOTED (U.O.N.) WHERE DISSIMILAR FLOOR MATERIALS MEET, CONTRACTOR SHALL RAISE ONE AS REQUIRED AND/OR DIRECTED BY ARCHITECT TO INSURE A LEVEL TRANSITION; FILLER MATERIAL TO BE APPROVED BY ARCHITECT PRIOR TO INSTALLATION.
7. CONTRACTOR SHALL USE 5/8" THICK TYPE 'X' GYP. BOARD UNLESS OTHERWISE NOTED.
8. CONTRACTOR SHALL USE EPOXY PAINT FOR GYP. BOARD FOR ALL INTERIOR SCHEDULED JANITOR CLOSETS.
9. UNLESS OTHERWISE NOTED: CONTRACTOR SHALL COMPENSATE TILE PATTERN SO AS NEVER TO UTILIZE TILE WHICH HAS BEEN CUT TO LESS THAN HALF THEIR ORIGINAL SIZE.
10. CONTRACTOR SHALL USE 'CORNER', 'J', 'L', 'T' AND 'CLIP' MOLDING AT ALL GYP. BOARD AND OR PLASTER CONNECTIONS AND TERMINATIONS TO DISSIMILAR MATERIALS.
11. PAINTER SHALL EXAMINE ALL SURFACES TO BE PAINTED BEFORE BEGINNING PAINTING WORK. WORK OF OTHER TRADES THAT HAS BEEN LEFT OR INSTALLED IN A CONDITION NOT SUITABLE TO RECEIVE PAINT, STAIN, OR OTHER FINISH SHALL BE REPAIRED AND/OR CORRECTED BY THE APPLICABLE TRADE PRIOR TO PAINTING. PAINTED FINISH SHALL BE FREE OF CRACKS, CHECKS, DIVOTS, HAMMER MARKS, AND OTHER IMPERFECTIONS. PAINTING OF DEFECTIVE OR UNSUITABLE SURFACE IMPLIES ACCEPTANCE OF THE SURFACE BY THE PAINTER, THUS MAKING THE PAINTER RESPONSIBLE FOR PERFORMING ALL NECESSARY CORRECTIVE MEASURES TO ACHIEVE DEFECT FREE FINISH.
12. ALL EXPOSED HVAC DUCTS AND GRILLES SHALL BE PAINTED TO MATCH ADJACENT SURFACE UNLESS OTHERWISE NOTED ON PLANS.
13. SEE INTERIOR ELEVATIONS FOR EXTENT OF TILE.
14. WALL AND CEILING MATERIALS SHALL NOT EXCEED THE FLAME SPREAD CLASSIFICATION IN UBC TABLE 42-B. SUSPENDED CEILINGS SHALL COMPLY WITH UBC TABLES 47-A AND 23-P. SEE SPEC. FOR MORE INFO. ON CARPET CATEGORY, IF CARPET IS USED.
15. ALL INTERIOR FINISHES AND DECORATIVE MATERIALS SHALL BE MAINTAINED IN A FLAME RETARDANT CONDITION. (C.A.C. T 19, SEC. 1.14, 3.08, 3.21, AND U.F.C. SEC. 11.204, SEC. 25.103, SEC. 25.104).
16. ALL STEEL TO REMAIN EXPOSED SHALL BE GROUND SMOOTH, PRIMED AND PAINTED TYPICAL, UNLESS OTHERWISE NOTED.
17. CONTRACTOR PROVIDES AND INSTALLS HORIZONTAL BLINDS AT ALL GLAZED OPENINGS, INCLUDING DOORS, WHERE INDICATED ON FINISH SCHEDULE.
18. KITCHEN FINISHES REQUIRING HEALTH DEPARTMENT APPROVAL TO BE AS FOLLOWS UNLESS OTHERWISE NOTED ON PLANS:
    a. FLOORING- SMOOTH QUARRY TILE, QUARRY TILE WITH NON SKID MATERIAL (RESTRICTED TO TRAFFIC AREAS ONLY).
    b. BASE- 6" COVED QUARRY TILE WITH 3/8" MINIMUM RADIUS INTEGRAL COVE.
    c. WALLS- 5/8" MOISTURE RESISTANT TYPE 'X' TYP. BOARD WITH SMOOTH FINISH. PAINT WITH SEMI GLOSS ENAMEL, LIGHT IN COLOR. WALLS BEHIND SINKS AND IN DISH WASHING AREA TO BE COVERED WITH LIGHT COLORED FRP AT LEAST 8 FEET HIGH. WALLS IN COOKING AREA AND BY HOOD TO BE COVERED WITH STAINLESS STEEL. SEE KITCHEN DRAWINGS FOR MORE INFO. PROVIDE STAINLESS STEEL CORNER GUARDS AT ALL WALL CORNERS.
    d. CEILING- 2' x 4' DROPPED CEILING TILE SYSTEM WITH SMOOTH, NON ABSORBENT FINISH, LIGHT COLORED, EASILY CLEANABLE FINISH.
19. CONTRACTOR SHALL PROVIDE AND INSTALL R-11 BATT SOUND INSULATION INSIDE ALL WALL CAVITIES SURROUNDING ALL OFFICES, CLASSROOMS AND RESTROOMS, TYP.
20. ALL TILE TO CARPET, OR NATURAL STONE TO CARPET, AND ALL OTHER CHANGE OF MATERIAL FLOORING TRANSITIONS SHALL HAVE METAL EDGE, AS MANUFACTURED BY SCHLUTER, "SCHIENE-E", OR EQUAL. RAMP UNDER SHEET GOODS 24" MINIMUM, TO MAKE SMOOTH TRANSITION, AS REQUIRED. REVIEW UNIQUE CONDITIONS WITH ARCHITECT.
21. WHEN A REGLET MEETS AN OUTSIDE CORNER OF A WALL OR CEILING, CONTINUE REGLET AROUND THE OUTSIDE CORNER TO THE INSIDE CORNER BEYOND.
22. VERIFY ALL ACCENT WALL PAINT COLORS AND LOCATIONS WITH ARCHITECT. ALL CHANGES IN WALL COLORS SHOULD OCCUR AT INSIDE CORNERS WHERE POSSIBLE. PARTIAL RETURN WALLS ADJACENT TO ACCENT WALLS MAY NEED TO BE PAINTED THE ACCENT COLOR IN ORDER TO TERMINATE AT AN INSIDE CORNER. THESE LOCATIONS WILL BE AT THE DISCRETION OF THE ARCHITECT.
23. ALL STAIRS TO HAVE CARPET AND PAD PER SPECIFICATION – UNLESS OTHERWISE NOTED.
24. FINISHES ARE AS FOLLOWS:
    P1 FLAT LATEX PAINT
    P2 EGGSHELL LATEX PAINT
    P3 SATIN LATEX PAINT
    P4 SEMI-GLOSS LATEX PAINT
    P5 GLOSS LATEX PAINT
    P6 STAIN
    PC ACOUSTICAL CEILING WITH FACTORY FINISH
    V UNFINISHED

Finish Schedule

NO.	NAME	BASE	FLOOR	WALL NORTH	WALL EAST	WALL SOUTH	WALL WEST	CEILING	CABINETRY	WINDOW COVERINGS	REMARKS
101	FIRST AID ROOM	--	F1	W1	W2	W1	W1	C1 / C2	CA1	B2	--
102	RECEPTION	--	F1	W1	W2	W1	W1	C1 / C2	CA2	-	--
103	LOCKER ROOM #1	B1	F1 / F2	W1	W1 / W4A	W4A	W1 / W4	C1 / C2	CA2 / CA3	B2	W3 @ SOFFITS
104	LOCKER ROOM #2	B1	F1 / F2	W4A	W1 / W4A	W1	W1 / W4	C1 / C2	CA2 / CA3	B2	W3 @ SOFFITS
105	RESCUE VEHICLES	--	F1	W1	W1	W1	W2 / W4	C1	-	-	--
106	UTILITY #1	--	F1	W2	-	W2	W4	C2	-	-	--
107	UTILITY #2	--	F1	W1	W1	W1	-	C1	-	-	--
108	EQUIP./JAN. RM.	--	F1	W1	W5	W5	W1	C1	-	-	--
109	ELECT. RM.	--	F1	W1	W1	W1	W1	C1	-	-	--
110	STAIR #1	--	F1 SIM.	W1 / W3	W1	W1	W1 / W2	C1 / C2	-	B2	--
111	NOT USED	--	-	-	-	-	-	-	-	-	--
112	RESTROOM	B1	F1	W2	W2	W2	W2	C2	-	-	--
113	STORAGE	--	F1	W2	W1	W2	W2	C1	-	-	--
114	BOARD & BUOY STORAGE	--	F1	W1	W1	W2A	W1 / W2A	C1	-	-	--
115	TELECOM. RM.	--	F1	W2	W1	W1	W1	C1	-	-	--
200	READY ROOM	--	F1	W1 / W3	W3	W1 / W3	W1 / W3	C1 /C2/ C3	CA1 / CA2 / CA3	B2	--
201	RESTROOM	B1	F2	W3 / W4	W3 / W4	W3 / W4	W3 / W4	C2	CA2	-	--
202	ADMIN.	--	F1	W1	W1 / W3	W1 / W3	W1	C4	CA2	B2	--
203	STORAGE	--	F4	W3	W3	W1	W1	C1	-	-	--
204	STAIR #2	--	F1 SIM.	W3	W3	W1	W1	C2	-	-	--
301	OBSERVATION LEVEL	--	F1 *	W1 / GLASS / W3A	W1 / W3 / W3A	W1 / GLASS / W3A	W1 / GLASS / W3A	C2A	CA2	B1 / B2	* RAISED FLOOR PARTIAL - 8/A5.7

Finish Legend

FINISH REFERENCE:
FF FACTORY FINISH
P1 FLAT LATEX PAINT
P2 EGGSHELL LATEX PAINT
P3 SATIN LATEX PAINT
P4 SEMI GLOSS LATEX PAINT
P5 GLOSS LATEX PAINT
P6 STAIN
P7 EPOXY
S SEALED
ST STAINED
U UNFINISHED
FT FIRE TAPE ONLY

BASE	
B1	INTEGRAL COVE BASE -TILE
FLOORING	(SEE FLOORING PATTERN PLAN FOR ADDITIONAL INFORMATION)
F1	EXPOSED CONCRETE SLAB, SEALED AND SLIP RESISTANT
F2	TILE
WALL	
W1	EXPOSED CONCRETE - SEALED
W2	EXPOSED CMU - SEALED
W3	5/8" TYPE 'X' MOISTURE & MOLD RESISTANT GYPSUM BOARD, PAINTED. (P4 U.N.O.)
W3A	5/8" TYPE 'X' MOISTURE & MOLD RESISTANT GYPSUM BOARD @ OBSERVATION LEVEL, PAINTED. (P4 U.N.O.)
W4	TILE, THINSET OVER GYP. BD., CMU OR CEMENTITIUS BACKER BOARD
W4A	ACCENT TILE, THINSET OVER GYP. BD., CMU OR CEMENTITIUS BACKER BOARD
W5	60" HIGH FRP WAINSCOT PANEL OVER CONCRETE
CEILING	(SEE REFLECTED CEILING PLANS FOR ADDITIONAL INFORMATION)
C1	EXPOSED CONCRETE - SEALED
C2	5/8" TYPE 'X' MOISTURE AND MOLD RESISTANT GYPSUM BOARD, PAINTED (P4, U.N.O.) (SEE REFLECTED CEILING PLANS FOR HEIGHTS)
C2A	5/8" TYPE 'X' MOISTURE AND MOLD RESISTANT GYPSUM BOARD @ OBSERVATION LEVEL, PAINTED (P4, U.N.O.) (SEE REFLECTED CEILING PLANS FOR HEIGHTS)
C3	ACOUSTICAL PANEL
C4	SUSPENDED ACOUSTICAL CEILNG
CABINETRY	(SEE INTERIOR ELEVATIONS FOR ADDITIONAL INFORMATION)
CA1	14 GA STAINLESS STEEL COUNTER TOP/ PLASTIC LAMINATE FACE
CA2	SOLID SURFACE COUNTER TOP
CA3	SOLID SURFACE COUNTER TOP / PLASTIC LAMINATE FACE
WINDOW COVERS	
B1	RETRACTABLE SHADE FILM
B2	RETRACTABLE SHADES

Door Schedule

NO.	TYPE	DOOR WIDTH	DOOR HEIGHT	DOOR THICK	DOOR MATERIAL / FINISH	CORE	GLAZG	LOUVER WIDTH	LOUVER HEIGHT	FRAME MATERIAL	DETAILS HEAD	DETAILS JAMB	DETAILS SILL	HDWR	RATING	REMARKS
101A	C	3'-0"	7'-0"	1 3/4"	FRP / FACTORY	S	Y	-	-	FRP / FACTORY	6/A5.6	11/A5.3	9/A5.3	02	--	A, E, F, G, H, M
101B	C	3'-0"	7'-0"	1 3/4"	FRP / FACTORY	S	Y	-	-	FRP / FACTORY	12/A5.3	12/A5.3	--	11	--	E, H, M
102A	B	6'-0" (PR)	8'-0"	1 3/4"	FRP / FACTORY	S	Y	-	-	FRP / FACTORY	6/A5.6	11/A5.3	9/A5.3	01	--	A, B, D, E, F, G, H, M
102B	B	6'-0" (PR)	8'-0"	1 3/4"	FRP / FACTORY	S	Y	-	-	FRP / FACTORY	6/A5.6	11/A5.3	9/A5.3	01	--	A, B, D, E, F, G, H, M
102C	A	3'-0"	7'-0"	1 3/4"	FRP / FACTORY	S	Y	-	-	FRP / FACTORY	7/A5.3	6/A5.6	-	08	60 MIN	E, F, K, M
103A	A	3'-0"	7'-0"	1 3/4"	FRP / FACTORY	S	--	-	-	FRP / FACTORY	7/A5.3	7/A5.3	--	07	--	J, L, M
103B	A	3'-0"	7'-0"	1 3/4"	FRP / FACTORY	S	--	-	-	FRP / FACTORY	12/A5.3	12/A5.3	9/A5.3	14	90 MIN	K, M
104A	A	3'-0"	7'-0"	1 3/4"	FRP / FACTORY	S	--	-	-	FRP / FACTORY	7/A5.3	7/A5.3	--	07	--	J, L, M
104B	A	3'-0"	7'-0"	1 3/4"	FRP / FACTORY	S	--	-	-	FRP / FACTORY	12/A5.3	12/A5.3	9/A5.3	14	90 MIN	K, M
105A	E	22'-0"	10'-0"	1 3/4"	ALUM / FACTORY	S	Y	-	-	-	10/A5.4	11/A5.4	12/A5.4	18	--	H, 10'-0" CLEAR VERTICAL HEIGHT, MINIMUM
105B	E	22'-0"	10'-0"	1 3/4"	ALUM / FACTORY	S	Y	-	-	-	10/A5.4	11/A5.4	12/A5.4	18	--	H, 10'-0" CLEAR VERTICAL HEIGHT, MINIMUM
108A	D	6'-0" (PR)	7'-0"	1 3/4"	FRP / FACTORY	S	--	-	-	FRP / FACTORY	7/A5.3	7/A5.3	--	13	--	E, J, M
109A	D	6'-0" (PR)	7'-0"	1 3/4"	FRP / FACTORY	S	--	1'-0"	1'-0"	FRP / FACTORY	11/A5.3	11/A5.3	9/A5.3	06	--	E, COORDINATE W/ UTILITY COMPANY, PROVIDE METAL LOUVER AT BOTH DOORS
112A	A	3'-0"	7'-0"	1 3/4"	FRP / FACTORY	S	--	-	-	FRP / FACTORY	12/A5.3	12/A5.3	--	16	--	C, E, J, L, M (UNISEX RESTROOM)
113A	A	3'-0"	7'-0"	1 3/4"	FRP / FACTORY	S	--	-	-	FRP / FACTORY	12/A5.3	12/A5.3	--	11	--	E, M
114A	C	3'-0"	7'-0"	1 3/4"	FRP / FACTORY	S	Y	1'-4"	1'-4"	FRP / FACTORY	6/A5.6	11/A5.3	9/A5.3	03	--	A, B, E, F, G, H, M
114B	A	3'-0"	7'-0"	1 3/4"	FRP / FACTORY	S	Y	-	-	FRP / FACTORY	7/A5.6	7/A5.6	-	08	60 MIN	E, F, K1, M (180° SWING) - HOLD OPEN (1/A5.6)
114C	C	3'-0"	8'-0"	1 3/4"	FRP / FACTORY	S	Y	-	-	FRP / FACTORY	6/A5.6	11/A5.3	9/A5.3	04	-	B, E, F, G, H, K, M
115A	A	3'-0"	7'-0"	1 3/4"	FRP / FACTORY	S	--	-	-	FRP / FACTORY	7/A5.3	7/A5.3	--	17	--	E, J, L, M
200A	A	3'-0"	7'-0"	1 3/4"	FRP / FACTORY	S	--	-	-	FRP / FACTORY	2/A5.6	2/A5.6	-	09	60 MIN	E, K1, M - HOLD OPEN (1/A5.6)
200B	A	2'-8"	7'-0"	1 3/4"	FRP / FACTORY	S	--	-	-	FRP / FACTORY	2/A5.6	2/A5.6	--	10	--	A, E
201A	AA	3'-0"	7'-0"	1 3/4"	FRP / FACTORY	S	--	-	-	FRP / FACTORY	6/A5.7	7/A5.7	--	19	--	C, E, J, M (UNISEX RESTROOM)
202A	C	3'-0"	7'-0"	1 3/4"	FRP / FACTORY	S	Y	-	-	FRP / FACTORY	7/A5.3	7/A5.3	--	15	--	E, H, M (NO CLOSER)
203A	A	2'-6"	7'-0"	1 3/4"	FRP / FACTORY	S	--	-	-	FRP / FACTORY	2/A5.6	2/A5.6	--	12	--	E
301A	C	2'-6"	7'-0"	1 3/4"	FRP / FACTORY	S	Y	-	-	FRP / FACTORY	11/A5.3	11/A5.3	9/A5.3	05	--	A, E, F, H, M
301B	C	3'-0"	5'-6"	1 3/4"	FRP / FACTORY	S	Y	-	-	FRP / FACTORY	11/A5.3	11/A5.3	17/A5.3	11	--	A, E, H, M

Door Notes

Title 24 Notes

1. HAND ACTIVATED DOOR HARDWARE SHALL BE CENTERED BETWEEN 30" AND 44" ABOVE THE FLOOR. LATCHING AND LOCKING DOORS THAT ARE HAND ACTIVATED AND WHICH ARE A PART OF THE PATH OF TRAVEL, SHALL BE OPERABLE WITH A SINGLE EFFORT BY LEVER TYPE HARDWARE, PANIC BARS, PUSH-PULL ACTIVATING BARS, OR OTHER HARDWARE DESIGNED TO PROVIDE PASSAGE WITHOUT REQUIRING THE ABILITY TO GRASP THE OPENING HARDWARE. LOCKED DOORS SHALL OPERATE AS ABOVE IN EGRESS DIRECTION.
2. MAXIMUM EFFORT TO OPERATE DOORS SHALL NOT EXCEED 8.5 POUNDS FOR EXTERIOR DOORS AND 5 POUNDS FOR INTERIOR DOOR. PUSH PULL OR PUSH EFFORT BEING APPLIED AT RIGHT ANGLES TO HINGED DOORS AND AT THE CENTER PLAN OF SLIDING OR FOLDING DOORS. COMPENSATING DEVICES OR AUTOMATIC DOOR OPERATIONS MAY BE UTILIZED TO MEET THE ABOVE STANDARDS. WHEN FIRE DOORS ARE REQUIRED THE MAXIMUM EFFORT TO OPERATE THE DOOR MAY BE INCREASED NOT TO EXCEED 15 POUNDS.
3. THE LOWER 10" OF ALL DOORS (EXCEPT SLIDING AND AUTOMATIC) SHALL HAVE A SMOOTH UNINTERRUPTED SURFACE. WHERE NARROW FRAME DOORS ARE USED, A 10" HIGH SMOOTH PANEL SHALL BE INSTALLED ON THE PUSH SIDE OF THE DOOR, WHICH WILL ALLOW THE DOOR TO BE OPENED BY A WHEELCHAIR FOOTREST WITHOUT CREATING A TRAP OR HAZARDOUS CONDITION.
4. MAXIMUM HEIGHT OF THRESHOLD TO BE 1/2". CHANGE IN LEVEL BETWEEN 1/4 INCH AND 1/2 INCH SHALL BE BEVELED WITH A SLOPE NO GREATER THAN 1:2.
5. ALL EXTERIOR DOORS SHALL COMPLY WITH SECTION T-20-1495(D) OF THE ENERGY STANDARDS.
    A. DOOR HEADS, SILLS AND JAMBS MUST HAVE SEALS, ASTRAGALS OR BAFFLES.
    B. A MINIMUM ONE-INCH LAP OF JAMB IS REQUIRED.
    C. DOORS MOUNTED BETWEEN THE JAMBS MUST HAVE A CONTINUOUS SEAL OR BAFFLE AT EACH JAMB.
    D. DOUBLE DOORS MUST HAVE A WEATHER-TIGHT ASTRAGAL OR CLOSURE AT THEIR CENTER.
    E. EXTERIOR DOORS MUST BE FULLY WEATHER-STRIPPED
6. "ALL EXIT DOORS SHALL BE OPERABLE FROM THE INSIDE WITHOUT THE USE OF A KEY OR ANY SPECIAL KNOWLEDGE OR EFFORT. NO DEAD BOLTS, NO SLIDING BOLTS, ETC." (U.B.C. SEC. 1004.3 AND U.F.C. SEC. 1 2.1 04(B)), UNLESS OTHERWISE NOTED ON THE PLANS.
7. DOORS SHALL MEET THE MINIMUM INFILTRATION REQUIREMENTS PER SECTION 2.5317 B.E.E.S AND CALIFORNIA BUILDING CODE TITLE 24-6-2-116.
8. ALL EXTERIOR DOORS SHALL BE SET IN SEALANT, WEATHER-STRIPPED AND LABELED AS COMPLYING WITH ANSI STANDARDS.

Notes

1. FINISH APPLIED TO DOORS SHALL OCCUR AT ALL SIX SURFACE EDGES.
2. STAINED DOORS TO HAVE STAINED JAMBS AND TRIM, UNLESS OTHERWISE NOTED.
3. STAIN GRADE DOOR TO BE 7 PLY. PAINT GRADE DOOR TO BE 5 PLY.
4. PAINTED WOOD DOORS TO HAVE PAINTED JAMBS AND TRIM, UNLESS OTHERWISE NOTED.
5. ALL FIRE RATED (F.R.) DOORS, DOOR FRAMES AND HARDWARE SHALL HAVE U.L. LABEL AND BE SELF OR AUTO CLOSING WITH APPROVED SIGNS PER L.S.C. 5-2.1.8.
6. GLASS IN DOORS TO BE TEMPERED AND LABELED PER CODE, UNLESS OTHERWISE NOTED.
7. **IN B OCCUPANCIES:** UNLESS DEADBOLT IS OPERABLE FROM THE INSIDE BY TURNING THE DOOR KNOB, THE DEADBOLT MUST BE AN INDICATING TYPE AND ON OR NEAR THE DOOR IN LETTERS 1" HIGH A SIGN STATING, "THIS DOOR TO REMAIN UNLOCKED DURING BUSINESS HOURS"
8. ALL FINISH HARDWARE TO BE INCLUDED IN AN ALLOWANCE ESTABLISHED BY THE GENERAL CONTRACTOR, UNLESS OTHERWISE NOTED (SEE SPECIFICATIONS SECTION 01020 AND/OR 08710).

Remarks

A. NON-FIRE RATED DOOR, SELF CLOSING WITH OVERHEAD STOP AND HOLDER
B. EXIT DOOR – SEE TITLE 24 NOTES, THIS PAGE
C. PROVIDE UNISEX REST ROOM SIGN 9/A5.0
D. PROVIDE SIGN "THIS DOOR TO REMAIN UNLOCKED DURING BUSINESS HOURS" PER UBC.
E. PROVIDE LOCK SET
F. ELECTRIC STRIKE / CONTROLS – SEE ELECTRICAL PLANS
G. DOOR TO HAVE ISA SIGN PER DETAIL 7/A5.0
H. DOOR TO HAVE INSTITUTIONAL LAMINATED GLASS
J. UNDERCUT DOOR, PER MECHANICAL
K. DOORS AND ASSEMBLIES TO BE FIRE RATED AND SELF CLOSING PER UBC SECTIONS 1005.3.3.5, 1005.3.4.4, 1005.3.5.3, 711.4 AND 713.2.
K1. DOORS AND ASSEMBLIES TO BE FIRE RATED AND SELF CLOSING, WITH AUTOMATIC HOLD-OPEN DECVICE CONNECETED TO FIRE ALARM SYSTEM. (SECTIONS 1005.3.3.5, 1005.3.4.4, 1005.3.5.3, 711.4 AND 713.2.)
L. NON-FIRE RATED DOOR WITH SELF CLOSER
M. PROVIDE STAINLESS STEEL KICK PLATE ON PUSH SIDE OF DOOR

A-27

Dominy + Associates Architects @ domusstudio
2150 West Washington, Suite 303
San Diego, California 92110
Tel 619.692.9393
Fax 619.692.9394
domusstudio.com

SPEC. NO. 8147

LICENSED ARCHITECT WAYNE POLTER No. C12113 REN 9.30.15 STATE OF CALIFORNIA

PLANS FOR THE CONSTRUCTION OF

South Mission Beach Lifeguard Station

Door Schedule + Finish Schedule | A6.0

CITY OF SAN DIEGO, CALIFORNIA
ENGINEERING & CAPITAL PROJECTS
ARCHITECTURAL ENGINEERING & CONTRACTS DIVISION
SHEET 45 OF 94 SHEETS

WBS S-00791

APPROVED: FOR CITY ENGINEER — DATE 10/13/2014

SUBMITTED BY: JIHAD SLEIMAN, PROJECT MANAGER

DESCRIPTION	BY	APPROVED	DATE	FILMED
ORIGINAL	WH/TT			

YOUSIF BENYAMIN, PROJECT ENGINEER
218-1693
CCS27 COORDINATES
1858-6253
CCS83 COORDINATES

CONTRACTOR _____ DATE STARTED _____
INSPECTOR _____ DATE COMPLETED _____

32849-45-D

© COPYRIGHT October 13, 2014 at 8:09AM

© COPYRIGHT November 04, 2014 at 3:10PM
Proprietary design: These drawings and design are protected by common law copyright. All patentable material contained herein and originating with Dominy + Associates Architects @ domusstudio LLP shall be the property of Dominy + Associates Architects @ domusstudio LLP

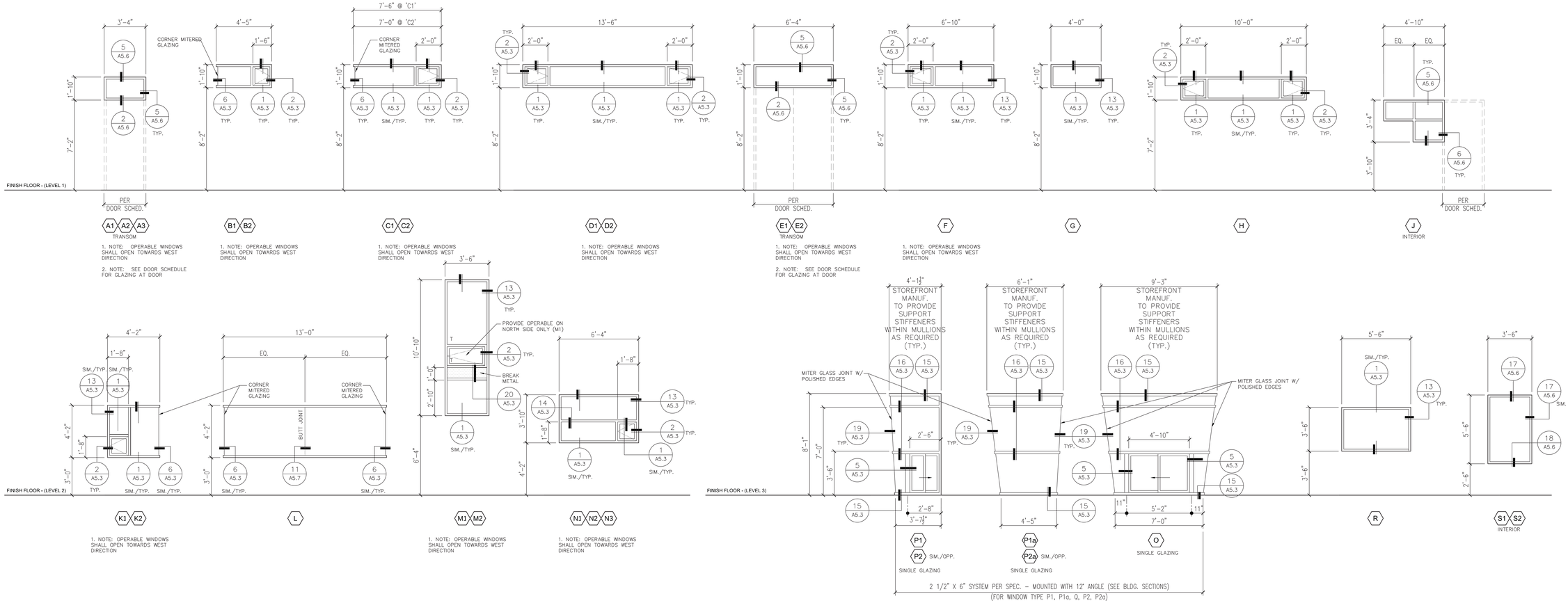

WINDOW SCHEDULE

NO.	DESCRIPTION	SIZE WIDTH	SIZE HEIGHT	FRAME MATERIAL / FINISH	DETAILS HEAD	DETAILS JAMB	DETAILS SILL	GLASS TYPE	ROLLER SHADE 1 (FABRIC)	ROLLER SHADE 2 (FILM)	REMARKS
A1	FIXED	3'-4"	1'-10"	ALUMINUM / FACTORY	SEE ELEVATIONS ABV.			1	X	-	-
A2	FIXED	3'-4"	1'-10"	ALUMINUM / FACTORY	SEE ELEVATIONS ABV.			1	X	-	-
A3	FIXED	3'-4"	1'-10"	ALUMINUM / FACTORY	SEE ELEVATIONS ABV.			1	X	-	-
B1	FIXED / CASEMENT	4'-5"	1'-10"	ALUMINUM / FACTORY	SEE ELEVATIONS ABV.			1	X	-	-
B2	FIXED / CASEMENT	4'-5"	1'-10"	ALUMINUM / FACTORY	SEE ELEVATIONS ABV.			1	X	-	-
C1	FIXED / CASEMENT	7'-6"	1'-10"	ALUMINUM / FACTORY	SEE ELEVATIONS ABV.			1	X	-	-
C2	FIXED / CASEMENT	7'-0"	1'-10"	ALUMINUM / FACTORY	SEE ELEVATIONS ABV.			1	X	-	-
D1	FIXED / CASEMENT	13'-6"	1'-10"	ALUMINUM / FACTORY	SEE ELEVATIONS ABV.			1	X	-	-
D2	FIXED / CASEMENT	13'-6"	1'-10"	ALUMINUM / FACTORY	SEE ELEVATIONS ABV.			1	X	-	-
E1	FIXED	6'-4"	1'-10"	ALUMINUM / FACTORY	SEE ELEVATIONS ABV.			1	X	-	-
E2	FIXED	6'-4"	1'-10"	ALUMINUM / FACTORY	SEE ELEVATIONS ABV.			1	X	-	-
F	FIXED / CASEMENT	6'-10"	1'-10"	ALUMINUM / FACTORY	SEE ELEVATIONS ABV.			1	X	-	-
G	FIXED	4'-0"	1'-10"	ALUMINUM / FACTORY	SEE ELEVATIONS ABV.			1	X	-	-
H	FIXED / CASEMENT	10'-10"	1'-10"	ALUMINUM / FACTORY	SEE ELEVATIONS ABV.			1	X	-	-
J	FIXED (INTERIOR)	4'-10"	3'-4"	HOLLOW MTL. / PAINT	SEE ELEVATIONS ABV.			3	-	-	60 MIN.
K1	FIXED / CASEMENT	4'-2"	4'-2"	ALUMINUM / FACTORY	SEE ELEVATIONS ABV.			1	X	-	-
K2	FIXED / CASEMENT	4'-2"	4'-2"	ALUMINUM / FACTORY	SEE ELEVATIONS ABV.			1	X	-	-
L	FIXED	13'-0"	4'-0"	ALUMINUM / FACTORY	SEE ELEVATIONS ABV.			1	X	-	-
M1	FIXED	3'-6"	10'-0"	ALUMINUM / FACTORY	SEE ELEVATIONS ABV.			1	X	-	(2) ROLLER SHADES AT THIS WINDOW
M2	FIXED	3'-6"	10'-0"	ALUMINUM / FACTORY	SEE ELEVATIONS ABV.			1	X	-	(2) ROLLER SHADES AT THIS WINDOW
N1	FIXED / CASEMENT	6'-4"	3'-10"	ALUMINUM / FACTORY	SEE ELEVATIONS ABV.			1	X	-	-
N2	FIXED / CASEMENT	6'-4"	3'-10"	ALUMINUM / FACTORY	SEE ELEVATIONS ABV.			1	X	-	-
N3	FIXED / CASEMENT	6'-4"	3'-10"	ALUMINUM / FACTORY	SEE ELEVATIONS ABV.			1	X	-	-
P1	FIXED / SLIDER	VARIES	8'-1"	ALUMINUM / FACTORY	SEE ELEVATIONS ABV.			2	-	X	SINGLE GLAZING
P1a	FIXED	VARIES	8'-1"	ALUMINUM / FACTORY	SEE ELEVATIONS ABV.			2	-	X	SINGLE GLAZING
P2	FIXED / SLIDER	VARIES	8'-1"	ALUMINUM / FACTORY	SEE ELEVATIONS ABV.			2	-	X	SINGLE GLAZING
P2a	FIXED	VARIES	8'-1"	ALUMINUM / FACTORY	SEE ELEVATIONS ABV.			2	-	X	SINGLE GLAZING
O	FIXED / SLIDER	VARIES	8'-1"	ALUMINUM / FACTORY	SEE ELEVATIONS ABV.			2	-	X	SINGLE GLAZING
R	FIXED	5'-6"	3'-6"	ALUMINUM / FACTORY	SEE ELEVATIONS ABV.			1	X	-	-
S1	FIXED (INTERIOR)	3'-6"	5'-6"	ALUMINUM / FACTORY	SEE ELEVATIONS ABV.			1	-	-	-
S2	FIXED (INTERIOR)	3'-6"	5'-6"	ALUMINUM / FACTORY	SEE ELEVATIONS ABV.			1	-	-	

1. NOTE: SEE DOOR SCHEDULE FOR GLAZING AT DOOR

NOTE: GLASS TYPES TO BE PER SCHEDULE. DETAILS ARE SIMILAR FOR BOTH DUAL & SINGLE GLAZE CONDITIONS.

Window Notes

1. CONTRACTOR SHALL VERIFY ALL WINDOW DIMENSIONS WITH SITE CONDITIONS PRIOR TO ORDERING.
2. ALL WINDOWS SHALL BE DUAL GLAZED, U.O.N.
3. WINDOWS SHALL MEET THE MINIMUM INFILTRATION REQUIREMENTS PER SECTION 2.5317 B.E.E.S. AND CALIFORNIA BUILDING CODE TITLE 24–6–2–116.
4. TEMPERED AND SAFETY GLAZING IS CALLED OUT IN DRAWINGS WITH SYMBOLS FOR CONTRACTORS CONVENIENCE AND SHALL NOT RELIEVE THE CONTRACTOR'S RESPONSIBILITY TO PROVIDE THIS GLASS IN ALL LOCATIONS REQUIRED BY CODE. ALL SAFETY GLAZING TEMPERED OR OTHERWISE SHALL BE LABELED PER CODE.
5. CONTRACTOR SHALL VERIFY ROUGH OPENING REQUIREMENTS WITH WINDOW MANUFACTURER BEFORE ROUGH FRAMING IS INSTALLED.
6. CONTRACTOR SHALL UTILIZE WINDOW PRODUCTS WITH FULL U–VALUE LABELING BY THE WINDOW MANUFACTURERS CHOICE OF DEFAULT OR NFRC–U METHOD.
7. ALL EXTERIOR WINDOWS AND SKYLIGHTS SHALL BE SET IN SEALANT, WEATHER–STRIPPED AND LABELED AS COMPLYING WITH ANSI STANDARDS.
8. SEE TITLE 24 ENERGY NOTES FOR MORE INFO.
9. EXTERIOR STRUCTURAL MEMBERS BETWEEN STOREFRONT FRAMES TO BE COVERED WITH BREAKMETAL PAINTED TO MATCH WINDOW SYSTEM, U.O.N.
10. ALL BREAK METAL AND ALUMINUM ANGLES/CHANNELS THAT ARE CONNECTED TO OR PART OF THE WINDOW OR SUN SHADE SYSTEM SHALL BE KYNAR COATED TO MATCH THE WINDOW SYSTEM

SYMBOLS

ALUM = ALUMINUM
STL = STEEL
WD = WOOD
PTD = PAINTED
T = TEMPERED GLAZING
SPG = SAFETY GLAZING

GLASS TYPES (PER SPECS)

1. 1" DUAL GLAZE, OUTSIDE LITE; 1/4", FACE #1 CLEAR, FACE #2 GUARDIAN SUNGUARD SN54 AND INSIDE LITE; 1/4", FACE #3 & #4 CLEAR; AS MANUFACTURED BY GUARDIAN INDUSTRIES CORP. MAXIMUM U–FACTOR: 0.37; MAXIMUM SHGC: 0.29.
2. 9/16" LAMINATED PILKINGTON OPTIVIEW: 1/4" OPTI–GRAY23 ANNEALED / .060 SGP INTERLAYER / 1/4" CLEAR ANNEALED WITH OPTIVIEW COATING #4 SURFACE – MAXIMUM U–FACTOR: 0.65; MAXIMUM SHGC: 0.72. – **(NO SUBSTITUTIONS)**
3. PILKINGTON PYROSTOP 60 MIN INTERIOR INSTALLATION AS MANUFACTURED BY PILKINGTON ARCHITECTURAL GLASS.
4. GLAZING AT DOORS

A-28

Dominy + Associates Architects @ domusstudio
2150 West Washington, Suite 303
San Diego, California 92110
Tel 619.692.9393
Fax 619.692.9394
domusstudio.com

SPEC. NO. 8147

LICENSED ARCHITECT WAYNE POPE No. C12113 REN 9.30.15 STATE OF CALIFORNIA

PLANS FOR THE CONSTRUCTION OF

South Mission Beach Lifeguard Station

Window Schedule

A6.1

CITY OF SAN DIEGO, CALIFORNIA
ENGINEERING & CAPITAL PROJECTS
ARCHITECTURAL ENGINEERING & CONTRACTS DIVISION
SHEET 46 OF 94 SHEETS

WBS S-00791

APPROVED: _____ FOR CITY ENGINEER — DATE 10/13/2014

SUBMITTED BY: JIHAD SLEIMAN, PROJECT MANAGER

DESCRIPTION	BY	APPROVED	DATE	FILMED
ORIGINAL	WH/TT			

YOUSIF BENYAMIN, PROJECT ENGINEER

218–1693 CCS27 COORDINATES

1858–6253 CCS83 COORDINATES

CONTRACTOR _____ DATE STARTED _____
INSPECTOR _____ DATE COMPLETED _____

32849–46–D

Proprietary design. These drawings and design are protected by common law copyright. All patentable material contained herein and originating with Dominy + Associates Architects @ domusstudio LLP shall be the property of Dominy + Associates Architects @ domusstudio LLP

SYMBOL	WALL ASSEMBLY	FIRE RATING	SOUND RATING	TEST ASSEMBLY	DESCRIPTION
W1 W1A W/ 2X6 FURRING	**CONCRETE WALL** 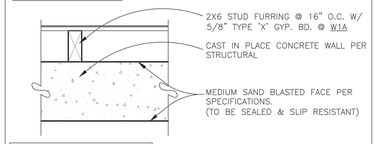 NOTE: SAND BLASTED FINISH ON BOTH SIDES OF CONCRETE.	4 HR.	N/A	CBC TABLE 7-B ITEM 7-1.1	---
W2 W2A W/ 2X6 FURRING	**CMU WALL** 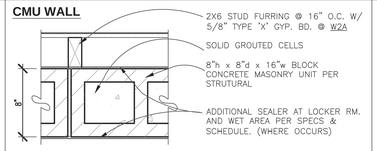 NOTE: PRECISION FINISH ON BOTH SIDES OF BLOCK.	2 HR.	N/A	CBC TABLE 7-B ITEM 6-1.4	4.2" MIN. THICKNESS CALCAREOUS OR SILICEOUS GRAVEL.
W4A 2x4 STUDS W4B 2x6 STUDS W4C 2x4 DBL. STUD WALL	**INT. WALL - NON RATED** 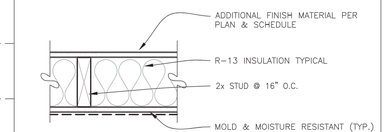 	N/R	N/A	N/A	---
W5A WITH 2 x 4 STUDS W5B WITH 2 x 6 STUDS	**1 HR. RATED WOOD FRAMED INTERIOR WALL (U.N.O.)** 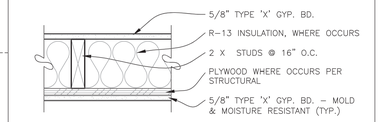 	1 HR.	N/A	GA FILE NO. WP 3230	ONE LAYER 5/8" TYPE X GYPSUM WALLBOARD OR VENEER BASE APPLIED WITH 1" TYPE S DRYWALL SCREWS AT EDGES 6" O.C. AND CENTER ROW 12" O.C. GYPSUM WALLBOARD FILLER STRIP ATTACHED TO PLATE AT FLOOR LINE WITH 6d NAILS 1-7/8" LONG, .086" SHANK, 1/4" HEADS 16" O.C. 1-1/2" GLASS FIBER .8 PCF ATTACHED TO STUDS IN STUD SPACE WITH 1/2" LONG STAPLES, ON OPPOSITE SIDE ONE LAYER 5/8" TYPE X GYPSUM WALLBOARD OR VENEER BASE APPLIED AT RIGHT ANGLES TO STUDS WITH 6d NAILS AS DESCRIBED ABOVE 8" O.C. STAGGER END JOINTS 48" O.C. EACH SIDE. SOUND TESTED WITH 3– 1/2" GLASS FIBER INSULATION. (LOAD BEARING)

SYMBOL	CEILING ASSEMBLY	FIRE RATING	SOUND RATING	TEST ASSEMBLY	DESCRIPTION
C-1	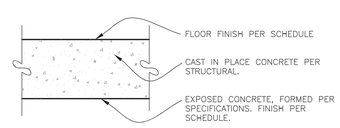 	---	---	---	CEILING JOISTS SHALL BE PER STRUCTURAL OR COUNTY STANDARD MIN.
C-2	**DROPPED GYPSUM BOARD CEILING** 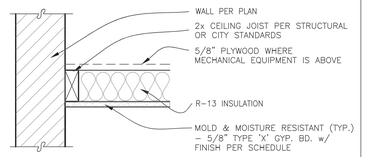 	---	---	---	CEILING JOISTS SHALL BE PER STRUCTURAL OR COUNTY STANDARD MIN.
C-3	**DROPPED GYPSUM BOARD CEILING** 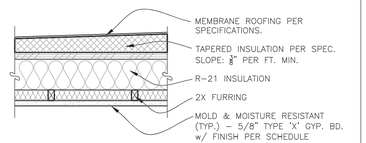 	---	---	---	CEILING JOISTS SHALL BE PER STRUCTURAL OR COUNTY STANDARD MIN.
C-4	**SUSPENDED ACOUSTICAL CEILING** 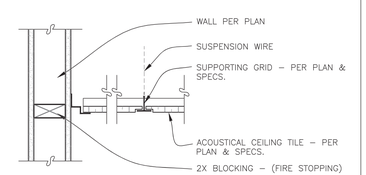 	---	---	---	SEE SHEET A5.4 FOR CEILING SUPPORT AND RESTRAINT

SYMBOL	ROOF ASSEMBLY	FIRE RATING	SOUND RATING	TEST ASSEMBLY	DESCRIPTION
R1	**MEMBRANE ROOF** 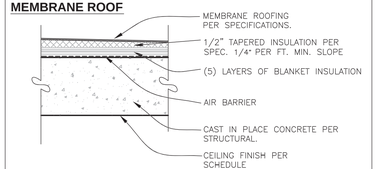 	4 HR.	N/A	CBC TABLE 7-C ITEM	CLASS A RATED ROOFING
R1A @ GARAGE	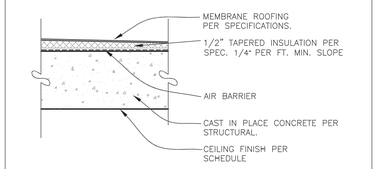 	4 HR.	N/A	CBC TABLE 7-C ITEM	CLASS A RATED ROOFING
R2	**MEMBRANE ROOF** 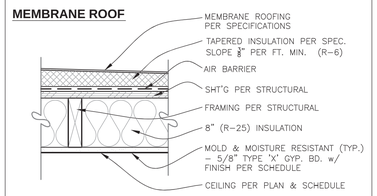 	N/R	N/A	N/A	CLASS A RATED ROOFING

SYMBOL	FLOOR ASSEMBLY	FIRE RATING	SOUND RATING	TEST ASSEMBLY	DESCRIPTION
F1	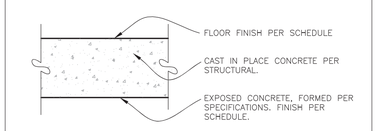 	---	---	---	---

BUILDING ENVELOPE INSULATION

ROOF INSULATION:

FIRST LEVEL: (ABOVE LOCKER ROOMS)
[5-LAYERS (2.5") OF HIGH PERFORMANCE BUILDING INSULATION BLANKET (R24) + 1/2" TAPERED RIGID INSULATION (R6) = R30 TOTAL – (SEE 8/A5.1, TYP.)

SECOND LEVEL: (UNDER MECHANICAL)
[5-LAYERS (2.5") OF HIGH PERFORMANCE BUILDING INSULATION BLANKET (R24) + 1/2" TAPERED RIGID INSULATION (R6) = R30 TOTAL – (SEE 8/A5.1, TYP.)

OBSERVATION LEVEL: (UPPER ROOF)
8" BATT (R25) + 1/2" TAPERED RIGID INSULATION (R6) = R31 TOTAL

WALL INSULATION: 3 5/8" BATT INSULATION (R13)

ASSEMBLY NOTES

1. INTERIOR WALLS ARE FULL HEIGHT TO UNDERSIDE OF CONCRETE OR PLYWOOD ROOF DECK ABOVE, U.N.O. – SEE 1/A5.4 TYP.
2. INTERIOR FRAMED WALLS SHALL HAVE R13 MIN. BATT INSULATION FOR SOUND ATTENUATION, U.N.O.
3. WOOD STRUCTURAL PANELS MAY BE INSTALLED BETWEEN THE FIRE PROTECTION & THE WOOD STUDS ON EITHER THE INTERIOR OR EXTERIOR SIDE OF THE WOOD FRAME ASSEMBLY IN TABLE 7-B, PROVIDED THE LENGTH OF THE FASTENERS USED TO ATTACH THE FIRE PROTECTION ARE INCREASED BY AN AMOUNT AT LEAST EQUAL TO THE THICKNESS OF THE WOOD STRUCTURAL PANEL.
4. SEE FINISH SCHEDULE FOR MOISTURE RESISTANT GYPSUM BOARD LOCATIONS, IN LIEU OF REGULAR NON-RESISTANT GYPSUM BOARD.
5. FINISH MATERIAL SHALL BE APPLIED DIRECTLY AGAINST FIRE-RESISTIVE OR NON-COMBUSTIBLE CONSTRUCTION, OR TO FURRING STRIPS NOT EXCEEDING 1 3/4" INCHES. FURRED SPACE SHALL BE FILLED WITH INORGANIC / CLASS 1 MATERIAL, OR FIRE STOPPED, NOT TO EXCEED 8 FEET IN ANY DIRECTION. (SECTION 803, ITEM 1)

A-29

Dominy + Associates Architects @ domusstudio
2150 West Washington, Suite 303
San Diego, California 92110
Tel 619.692.9393
Fax 619.692.9394
domusstudio.com

SPEC. NO. 8147

LICENSED ARCHITECT JOSEPH POOLE DOMINY No. C12113 REN 9.30.15 STATE OF CALIFORNIA

PLANS FOR THE CONSTRUCTION OF

South Mission Beach Lifeguard Station

Wall Assemblies | A6.2

CITY OF SAN DIEGO, CALIFORNIA
ENGINEERING & CAPITAL PROJECTS
ARCHITECTURAL ENGINEERING & CONTRACTS DIVISION
SHEET 47 OF 94 SHEETS

APPROVED: _____ FOR CITY ENGINEER
10/13/2014 DATE

DESCRIPTION	BY	APPROVED	DATE	FILMED
ORIGINAL	WH/TT			

WBS S-00791

SUBMITTED BY: JIHAD SLEIMAN, PROJECT MANAGER

YOUSIF BENYAMIN, PROJECT ENGINEER

218-1693
CCS27 COORDINATES
1858-6253
CCS83 COORDINATES

CONTRACTOR _____ DATE STARTED _____
INSPECTOR _____ DATE COMPLETED _____

32849-47-D

© COPYRIGHT October 13, 2014 at 8:19AM

Proprietary dasligns: These drawings and design are protected by common law copyright. All patentable material contained herein and originating with Dominy • Associates Architects @ domusstudio LLP shall be the property of Dominy • Associates Architects @ domusstudio LLP

GENERAL

1. THE CONTRACTOR SHALL VERIFY ALL DIMENSIONS, ELEVATIONS AND CONDITIONS AT THE JOB SITE BEFORE STARTING WORK, AND SHALL NOTIFY THE ARCHITECT IMMEDIATELY OF ANY DISCREPANCIES.

2. NOTES AND DETAILS ON THE DRAWINGS SHALL TAKE PRECEDENCE OVER THESE STANDARD NOTES AND TYPICAL DETAILS IN CASE OF CONFLICT.

3. DIMENSIONS SHALL TAKE PRECEDENCE OVER SCALED DRAWINGS.

4. ALL MATERIALS AND WORKMANSHIP SHALL BE PERFORMED IN ACCORDANCE WITH LOCAL STANDARDS AND THE APPLICABLE PROVISIONS OF THE 2010 CALIFORNIA BUILDING CODE (CBC) AS AMENDED BY THE CITY OF SAN DIEGO.

5. WHERE NO CONSTRUCTION DETAILS ARE SHOWN OR NOTED FOR ANY PART OF THE WORK, SUCH DETAILS SHALL BE THE SAME AS FOR SIMILAR WORK SHOWN ON THE DRAWINGS.

6. THE CONTRACT STRUCTURAL DRAWINGS AND SPECIFICATIONS REPRESENT THE FINISHED STRUCTURE, UNLESS OTHERWISE INDICATED. THEY DO NOT INDICATE THE METHOD OF CONSTRUCTION. THE CONTRACTOR SHALL PROVIDE ALL MEASURES NECESSARY TO PROTECT THE STRUCTURE, WORKMEN, AND OTHER PERSONS DURING CONSTRUCTION. SUCH MEASURES SHALL INCLUDE, BUT NOT BE LIMITED TO, BRACING, SHORING FOR CONSTRUCTION EQUIPMENT, SHORING FOR THE BUILDING, SHORING FOR EARTH BANKS, FORMS, SCAFFOLDING, PLANKING, SAFETY NETS, SUPPORT AND BRACING FOR CRANES AND GIN POLES, ETC. THE CONTRACTOR SHALL SUPERVISE AND DIRECT THE WORK AND HE OR SHE SHALL BE SOLELY RESPONSIBLE FOR ALL CONSTRUCTION MEANS, METHODS, TECHNIQUES, SEQUENCES AND PROCEDURES. OBSERVATION VISITS TO THE SITE BY THE ENGINEER SHALL NOT CONSTITUTE INSPECTION OF THE ABOVE ITEMS.

7. THE PROJECT SPECIFICATIONS FORM A PART OF THESE GENERAL NOTES.

8. ALL WORK SHALL CONFORM TO THE MINIMUM STANDARDS OF THE FOLLOWING CODES:

   THE 2010 EDITION OF THE CALIFORNIA BUILDING CODE, AND OTHER REGULATING AGENCIES WHICH HAVE AUTHORITY OVER ANY PORTION OF THE WORK, AND THOSE CODES AND STANDARDS LISTED IN THESE NOTES AND THE PROJECT SPECIFICATIONS.

9. SEE THE ARCHITECTURAL DRAWINGS FOR THE FOLLOWING:

   SIZE AND LOCATION OF DOOR AND WINDOW OPENINGS.
   SIZES AND LOCATION OF INTERIOR AND EXTERIOR NON-BEARING PARTITIONS.
   SIZES AND LOCATIONS OF CONCRETE CURBS, FLOOR DRAINS, SLOPES, DEPRESSED AREAS, CHANGES IN LEVEL, CHAMFERS, GROOVES, INSERTS, ETC.
   SIZE AND LOCATION OF FLOOR AND ROOF OPENINGS.
   FLOOR AND ROOF FINISHES.
   STAIR FRAMING AND DETAILS.
   DIMENSIONS NOT SHOWN ON THE STRUCTURAL DRAWINGS.
   CEILING ASSEMBLIES.
   EXTERIOR WALL ASSEMBLIES.

10. SEE MECHANICAL, PLUMBING, AND ELECTRICAL DRAWINGS FOR THE FOLLOWING:

    PIPE SLEEVES, HANGERS, TRENCHES, WALL FLOOR AND ROOF OPENINGS, DUCT PENETRATION ETC., EXCEPT AS SHOWN OR NOTED.
    ELECTRICAL CONDUIT RUNS, BOXES, OUTLETS IN WALLS AND SLABS.
    CONCRETE INSERTS FOR ELECTRICAL, MECHANICAL OR PLUMBING FIXTURES.
    SIZE AND LOCATION OF MACHINE OR EQUIPMENT BASES, ANCHORS BOLTS FOR MOUNTS.

11. NOTIFY THE STRUCTURAL ENGINEER WHEN DRAWINGS BY OTHERS SHOW OPENINGS, POCKETS, ETC, NOT SHOWN ON THE STRUCTURAL DRAWINGS, BUT WHICH ARE LOCATED IN THE STRUCTURAL MEMBERS.

12. CONTRACTOR SHALL INVESTIGATE THE SITE DURING CLEARING AND EARTH WORK OPERATIONS FOR FILLED EXCAVATIONS OR BURIED STRUCTURES SUCH AS CESSPOOLS, CISTERNS, FOUNDATIONS, UTILITIES, ETC. IF ANY SUCH STRUCTURES ARE FOUND, THE STRUCTURAL ENGINEER SHALL BE NOTIFIED IMMEDIATELY.

13. CONSTRUCTION MATERIALS SHALL BE SPREAD OUT WHEN PLACED ON FRAMED FLOORS OR ROOFS. THE CONSTRUCTION MATERIAL LOAD SHALL NOT EXCEED THE DESIGN LIVE LOAD PER SQUARE FOOT. PROVIDE ADEQUATE SHORING AND/OR BRACING WHERE STRUCTURE HAS NOT ATTAINED DESIGN STRENGTH.

14. SHOP DRAWINGS SUBMITTED TO THE STRUCTURAL ENGINEER FOR REVIEW SHALL CONSIST OF 2 BLUELINE SETS MINIMUM.

DESIGN CRITERIA

1. LIVE LOADS:

   ROOF 20 P.S.F.

   FLOOR 50 P.S.F.

   STAIRS 100 P.S.F.

DESIGN CRITERIA (CONTINUED)

2. WIND DESIGN DATA: ASCE 7-05 CHAP 6

   BASIC WIND SPEED 85 M.P.H.

   3 SECOND GUST 85 M.P.H.

   WIND IMPORTANCE FACTOR 1.0

   OCCUPANCY CATEGORY II

   WIND EXPOSURE D

3. EARTHQUAKE DESIGN DATA:

SEISMIC PARAMETER	RECOMMENDED VALUE	ASCE 7-05
SEISMIC IMPORTANCE FACTOR	I = 1.0	SEC 11.5.1
Ss	1.476	SEC 11.4.1
S1	0.566	SEC 11.4.1
SITE CLASS	S_D	
Sds	0.984	
Sd1	0.566	
SEISMIC DESIGN CATEGORY	D	SEC 11.6.1.1
BASIC SEISMIC-FORCE-RESISTING SYSTEM(S)	A.1/A.7	TABLE 12.2-1
DESIGN BASE SHEAR	$V = C_S W$	
Cs	0.248	
R	5.0	
RHO	1.30	
ANALYSIS PROCEDURE USED	EQUIV LAT FORCE	

SOILS CONDITION

1. THE CHARACTER OF SOIL AT THIS SITE IS CONTAINED IN THE GEOTECHNICAL (SOILS) REPORT PREPARED BY TERRA COSTA CONSULTING GROUP, INC. PROJECT NO. 2231 DATED NOVEMBER 8, 2007 AND UPDATED FOR CBC 2010 SEISMIC REQUIREMENTS DATED DECEMBER 1, 2011. CONTRACTOR SHALL READ AND BECOME FAMILIAR WITH ITS REQUIREMENTS.

2. THE DESIGN IS BASED UPON:

   A. THE ALLOWABLE SOIL BEARING PRESSURE IS 2000 P.S.F. FOR DEAD PLUS LIVE LOADS. ALL SOIL PRESSURE VALUES MAY BE INCREASED BY 1/3 WHEN CONSIDERING TRANSIENT LOADS DUE TO WIND OR SEISMIC FORCES. THE ALLOWABLE SUBGRADE MODULUS IS 75 P.C.I.

   B. SOIL PASSIVE PRESSURE SHALL BE LIMITED TO AN EQUIVALENT FLUID PRESSURE OF 300 P.C.F.

   C. A SLIDING COEFFICIENT OF 0.45.

   D. BULKHEAD WALL DESIGN LOADS AS FOLLOWS:

3. EQUIVALENT FLUID PRESSURE OF 80 P.C.F. ASSUMING SATURATED BACKFILL.

4. MAXIMUM COMBINED HYDROSTATIC AND HYDRODYNAMIC WAVE FORCES OF 22,660 P.L.F.

5. PULSATING WAVE LOADS OF 8,500 P.L.F.

6. SUBGRADE PREPARATION UNDER THE BUILDING SHALL BE COMPACTED BY A COMBINATION OF FLOODING AND VIBRATION TO A MINIMUM RELATIVE COMPACTION OF 90% AS DETERMINED BY ASTM D-1557. THE TOP 2 FEET SHALL BE OVEREXCAVATED AND RECOMPACTED TO A MINIMUM 90% AND THIS RECOMPACTION SHOULD EXTEND A MINIMUM OF 5 FEET OUTSIDE OF THE BUILDING LIMITS.

7. FOOTING ELEVATIONS SHOWN ARE FOR BIDDING PURPOSES ONLY AND ARE ASSUMED TO BE IN SUITABLE BEARING MATERIALS. THE ACTUAL ADEQUACY OF THE BEARING MATERIAL SHALL BE DETERMINED BY A REPRESENTATIVE OF THE GEOTECHNICAL ENGINEER PRIOR TO PLACING OF REINFORCING OR POURING OF CONCRETE, AND FOOTING ELEVATIONS SHALL BE ADJUSTED, OR OTHER REMEDIAL ACTION TAKEN, AS DIRECTED BY THIS REPRESENTATIVE AND APPROVED BY THE ARCHITECT AND THE ENGINEER.

8. IF THE BUILDING INSPECTOR SUSPECTS EXPANSIVE SOILS BASED ON OBSERVATION OF THE FOUNDATION EXCAVATION, HE MAY REQUIRE SOIL EXPANSION INDEX TESTS IN ACCORDANCE WITH CBC STD 18-2 OR CHAP 6, DIV 7, TITLE 8 OF THE SAN DIEGO COUNTY CODE.

FOUNDATION

1. CONTRACTOR SHALL PROVIDE FOR PROPER DEWATERING OF EXCAVATIONS FROM SURFACE WATER, GROUND WATER, SEEPAGE, ETC.

2. CONTRACTOR SHALL PROVIDE FOR THE DESIGN AND INSTALLATION OF ALL CRIBBING, SHEATHING AND SHORING REQUIRED TO SAFELY AND ADEQUATELY RETAIN THE EARTH BANKS AND ANY EXISTING STRUCTURE.

3. FOOTING BACKFILL AND UTILITY TRENCH BACKFILL WITHIN THE BUILDING PERIMETER SHALL BE MECHANICALLY COMPACTED IN LAYERS, TO THE APPROVAL OF THE GEOTECHNICAL ENGINEER.

CONCRETE

1. ALL CONCRETE SHALL BE NORMAL WEIGHT, 150 P.C.F., U.O.N. USE 1-INCH NOMINAL AGGREGATE WITH WATER/CEMENT RATIO NOT TO EXCEED 0.45.

2. ALL CONCRETE SHALL HAVE A 28-DAY COMPRESSIVE STRENGTH OF 4,200 P.S.I. MINIMUM AND MINIMUM CEMENT CONTENT OF 520 POUNDS PER CUBIC YARD.

3. CONCRETE PROTECTION FOR REINFORCEMENT. THE FOLLOWING MINIMUM CONCRETE COVER SHALL BE PROVIDED FOR REINFORCEMENT:

   MIN COVER (INCHES)

   A. CONCRETE CAST AGAINST AND PERMANENTLY EXPOSED TO EARTH: 3

   B. CONCRETE EXPOSED TO EARTH OR WEATHER
      NO 6 THROUGH NO 18 BAR 2
      NO 5 BAR AND SMALLER 1 1/2

   C. CONCRETE NOT EXPOSED TO WEATHER OR IN CONTACT WITH GROUND:
      SLABS, WALLS
      NO 14 AND NO 18 BAR 1 1/2
      NO 11 BAR, AND SMALLER 3/4
      BEAMS, COLUMNS, PRIMARY REINFORCEMENT, TIES, STIRRUPS, SPIRALS 1 1/2

4. ANCHOR BOLTS AND DOWELS: SECURELY HELD IN PLACE PRIOR TO PLACING CONCRETE.

5. PIPES, DUCTS, VENTS AND SIMILAR OPENINGS ARE NOT PERMITTED UNLESS SHOWN ON THE STRUCTURAL DRAWINGS.

6. CHAMFER: 3/4" ON ALL EXPOSED CORNERS U.O.N.

7. THE ARCHITECT SHALL BE NOTIFIED 24 HOURS IN ADVANCE OF ALL CONCRETE PLACEMENT.

8. FORMS FOR CONCRETE SHALL BE LAID OUT AND CONSTRUCTED TO PROVIDE THE SPECIFIED CAMBERS SHOWN ON THE DRAWINGS.

9. THE CONTRACTOR SHALL MAINTAIN A LOG OF STRUCTURAL SLAB ELEVATIONS BASED ON THE ARCHITECTURAL DRAWINGS PLUS THE ADDITION OF ANY CAMBERS INDICATED ON THE CONSTRUCTION DOCUMENTS. THIS LOG SHALL INDICATE SCREED ELEVATION PRIOR TO THE CONCRETE POUR, AND TOP OF CONCRETE SLAB PRIOR TO REMOVAL OF FORMS.

10. THE CONCRETE SLAB THICKNESS SHALL BE MAINTAINED UNLESS OTHERWISE SHOWN.

11. CEMENT SHALL BE ASTM C-150 TYPE II OR TYPE V. USE TYPE V CEMENT AND CONCRETE COMPLYING WITH CBC SECTION 1904.3 WHEN CONCRETE IS EXPOSED TO SOILS CONTAINING SULFATES.

12. CONTRACTOR SHALL SUBMIT CONCRETE MIX DESIGNS TO THE ARCHITECT FOR APPROVAL PRIOR TO CASTING CONCRETE.

13. WHERE CONTINUOUS BARS ARE CALLED OUT, PROVIDE TIED CONTACT SPLICES AS REQUIRED. STAGGER SPLICES OF ALTERNATE BARS BY THE FULL SPLICE LENGTH.

14. CONCRETE MIXES MAY CONTAIN FLY ASH. THE FLY ASH SHALL CONFORM TO ASTM C618 CLASS F AND THE LOSS OF IGNITION SHALL BE LIMITED TO 2%. THE ADDITION RATE SHALL NOT EXCEED 15% OF THE CEMENT WEIGHT. THE CONTRACTOR SHALL SUBMIT ALL CERTIFICATES SHOWING THE FLY ASH CONFORMS TO THE ABOVE CRITERIA.

16. AGGREGATE FOR HARD ROCK CONCRETE SHALL CONFORM TO ALL REQUIREMENTS AND TESTS OF ASTM C33 AND PROJECT SPECIFICATIONS. EXCEPTIONS MAY BE USED ONLY WITH PERMISSION OF THE STRUCTURAL ENGINEER.

17. AT EXTERIOR HORIZONTAL CONSTRUCTION JOINTS (CJ) THE SURFACE TO RECEIVE NEW CONCRETE SHALL BE PREPARED IN THE FOLLOWING MANNER.

   A. SAND BLAST THE SURFACE TO 1/4 INCH AMPLITUDE EXPOSING THE CONCRETE MATRIX.

   B. DAMPEN TO SATURATED SURFACE DRY PRIOR TO PLACING NEW CONCRETE.

MASONRY

1. CONCRETE BLOCK: CBC STANDARD 21-4, ASTM C-90, GRADE N, MEDIUM WEIGHT, OPEN END UNITS. PROVIDE BOND BEAM UNITS AT ALL HORIZONTAL REINFORCEMENT. f'm = 1500 P.S.I.

2. ALL VERTICAL STEEL SHALL BE CENTERED ON THE WALL, EXCEPT VERTICAL REINFORCING IN WALLS WHICH RETAIN EARTH SHALL BE POSITIONED AS SHOWN ON SECTIONS AND DETAILS AND 3/4" FROM INSIDE SURFACE OF FACE SHELL.

3. REINFORCEMENT SPLICES: LAP 48 BAR DIAMETERS OR 1'-8", WHICHEVER IS GREATER, U.O.N.

MASONRY (CONTINUED)

4. MORTAR: CBC STANDARD 21-15 TYPE S WITH A COMPRESSIVE STRENGTH OF 1800 P.S.I. AT 28 DAYS. JOINTS SHALL BE LIGHTLY COMPRESSED.

5. GROUT: CBC STANDARD 21-19 WITH A COMPRESSIVE STRENGTH OF 2,000 P.S.I. AT 28 DAYS. ALL GROUT SHALL CONTAIN SIKA GROUT AID PER MANUFACTURER'S RECOMMENDATIONS.

6. ALL MASONRY SHALL BE RUNNING BOND AND SOLID GROUTED.

7. HORIZONTAL CONSTRUCTION JOINTS IN GROUT POUR SHALL BE MADE BY STOPPING THE GROUT 1-1/2" BELOW TOP OF MASONRY UNIT.

8. ALL GROUT SHALL BE VIBRATED WITH HIGH FREQUENCY INTERNAL MECHANICAL VIBRATING EQUIPMENT.

9. GROUTING OF WALLS SHALL COMPLY WITH THE CBC REQUIREMENTS FOR LOW LIFT GROUTING.

REINFORCING STEEL

1. ALL REINFORCING STEEL SHALL BE EPOXY COATED AND CONFORM TO THE REQUIREMENTS OF ASTM A615 GRADE 60 AND A934, EXCEPT #3 BARS AND WIRE TIES MAY HAVE Fy = 40,000 P.S.I. MIN.

2. VERTICAL REINFORCEMENT SHALL BE DOWELED TO THE SUPPORTING MEMBERS WITH THE SAME SIZE AND SPACING OF REINFORCEMENT AS CALLED FOR IN THE DRAWINGS OR STANDARD NOTES.

3. WELDING OF REINFORCEMENT IS NOT PERMITTED.

4. SPACER TIES: FURNISH #3 TIES AT 24" O.C. IN ALL BEAMS AND FOOTINGS, UNLESS OTHERWISE SHOWN IN DETAILS.

5. WELDED WIRE MESH SHALL BE EPOXY COATED AND CONFORM TO ASTM A497 AND A884, FLAT SHEETS.

STRUCTURAL STEEL

1. ALL STRUCTURAL STEEL SHALL CONFORM TO ASTM A572 GRADE 50, Fy = 50 K.S.I., AND SHALL BE FABRICATED ACCORDING TO AISC PRACTICE AND SPECIFICATIONS FOR BUILDINGS (UNLESS OTHERWISE SPECIFIED).

2. ALL STRUCTURAL HOLLOW TUBES SHALL CONFORM TO ASTM A 500 GRADE B. STEEL PIPE SHALL CONFORM TO ASTM A53, GRADE B. STRUCTURAL STEEL PLATES, CHANNELS & ANGLES SHALL BE ASTM A36, FY=36 K.S.I.

3. BOLTS SHALL CONFORM TO ASTM A 307 OR A325, U.O.N. ALL BOLTS SHALL BE INSTALLED WITH CUT STEEL WASHERS. BOLT HOLES SHALL BE 1/16-INCH OVERSIZED.

4. ALL WELDING SHALL BE PERFORMED BY CERTIFIED OPERATORS UNDER THE SUPERVISION OF AN APPROVED FABRICATOR USING THE ELECTRIC SHIELDED ARC PROCESS AS FORMULATED BY THE AMERICAN WELDING SOCIETY.

5. STEEL SHALL BE IDENTIFIED BY HEAT OR MELT NUMBERS AND SHALL BE ACCOMPANIED BY TEST REPORTS.

6. AISC STANDARD BEAM CONNECTIONS SHALL BE USED FOR CONNECTIONS NOT SHOWN (AISC 9TH EDITION OR EQUAL) USING 3/4-INCH BOLTS.

7. BASE PLATES SHALL BE BEDDED ON MINIMUM 1-INCH DRYPACK GROUT (NON-SHRINK GROUT).

8. ALL STEEL SHALL BE FABRICATED TO FIT TOGETHER PLUMB AND TRUE IN THE FIELD WITHOUT ALTERATION.

9. WELDING ELECTRODES FOR MANUAL SHIELDED METAL-ARC WELDING SHALL CONFORM TO SPECIFICATIONS FOR MILD STEEL COVERED ARC WELDING ELECTRODES, AWS A5.1, OR SPECIFICATION FOR LOW-ALLOY STEEL COVERED ARC- WELDING ELECTRODES AWS A5.5. ELECTRODES SHALL BE E70 SERIES.

10. ELECTRODES USED IN THE GAS METAL ARC PROCESS SHALL CONFORM TO SPECIFICATION FOR MILD STEEL ELECTRODES FOR GAS METAL-ARC WELDING AWS A5.18.

11. REFER TO SPECIAL INSPECTION NOTES FOR WELDING REQUIREMENTS.

12. EXCEPT AS SUBSEQUENTLY NOTED, HIGH STRENGTH BOLTS NEED NOT BE TIGHTENED BEYOND THE SNUG-TIGHT CONDITION, AS DEFINED IN SECTION 8 (C) "OF THE SPECIFICATIONS FOR STRUCTURAL JOINTS USING ASTM A325 OR A490 BOLTS." FOR CONNECTIONS SUBJECT TO DIRECT TENSION, CONNECTIONS FOR BRACED FRAMES, AND OTHER CONNECTIONS SHOWN OR NOTED ON THE PLANS AS S.C. (SLIP CRITICAL) OR FULLY TENSIONED, BOLTS SHALL BE TIGHTENED BY ONE OF THE METHODS DESCRIBED IN SECTION 8 (D) AND TO THE MINIMUM TENSION SPECIFIED IN SECTION 8 (D), TABLE 4.

13. ALL STRUCTURAL STEEL SHALL BE HOT DIP GALVANIZED.

DRIVEPIN FASTENERS (PINS)

1. INSTALLED WITH LOW VELOCITY, POWDER ACTUATED TOOLS.

2. FASTENERS (PINS) SHALL BE ICBO APPROVED FOR USE IN THE TYPE OF CONCRETE SPECIFIED.

   SIMPSON . . . . . .ESR #2138
   HILTI X-U . . . . . ESR #2269
   ITW RAMSET . . . . . ESR #1799

   SUBSTITUTIONS SHALL BE APPROVED BY THE ENGINEER OF RECORD, BECAUSE CONDITIONS OF USE IN ESR REPORTS MAY VARY.

3. FASTENERS (PINS) SHALL BE THE HEADED TYPE, INSTALLED WITH OR WITHOUT WASHERS AS RECOMMENDED BY ESR REPORT.

4. DRIVE PIN FASTENERS (PINS) SHALL NOT BE INSTALLED UNTIL CONCRETE HAS REACHED THE SPECIFIED 28 DAY STRENGTH.

5. THE DIAMETER AND MINIMUM EMBEDMENT SHALL BE AS INDICATED ON THE DRAWINGS.

6. WHEN INSTALLING POWDER DRIVEN PINS IN EXISTING NON-PRESTRESSED REINFORCED CONCRETE USE CARE AND CAUTION TO AVOID CUTTING OR DAMAGING THE EXISTING REINFORCING BARS. MAINTAIN A MINIMUM CLEARANCE OF ONE INCH BETWEEN THE REINFORCEMENT AND THE PIN.

MISCELLANEOUS METALS

1. MISCELLANEOUS METALS SHALL INCLUDE ITEMS MANUFACTURED AND SHOP FORMED OR FABRICATED ITEMS NOT SPECIFIED ELSEWHERE.

2. ALL MISCELLANEOUS STEEL ITEMS SHALL BE SHOP PRIMED UNLESS NOTED OTHERWISE. SEE STRUCTURAL STEEL NOTES.

3. WELDING SHALL COMPLY WITH AWS PROCEDURES, AND WELDERS MUST BE CERTIFIED.

4. ALL MISCELLANEOUS METALS SHALL BE HOT DIP GALVANIZED AND SHALL COMPLY WITH ASTM A123, WITH MINIMUM COATING THICKNESS PER TABLE.

5. PAINTING SHALL COMPLY WITH CARB AND EPA REGULATIONS.

6. STEEL SHAPES, PLATES AND BARS – ASTM A36. STAINLESS STEEL SHAPES PLATES AND BARS SHALL BE ASTM A276 316 S.S. Fy = 30 K.S.I.

7. STEEL PIPE – ASTM A501 OR ASTM A53, TYPE E OR S.

8. STEEL TUBE – ASTM A500 GRADE B.

9. BOLTS: ASTM A307 U.O.N.

10. FURNISH ALL NECESSARY ANCHORAGE DEVICES, AND FASTENERS FOR COMPLETE INSTALLATION.

11. VERIFY FIELD CONDITIONS SO THAT ITEMS CAN BE INSTALLED WITHOUT CUTTING AND FITTING IN THE FIELD.

12. FIT EXPOSED CONNECTIONS ACCURATELY TO FORM TIGHT JOINTS.

13. TOUCH UP PRIMED AND GALVANIZED SURFACES DAMAGED OR FIELD FITTED.

S-1

MARTIN & LIBBY
STRUCTURAL ENGINEERS
4452 Glacier Avenue, San Diego, CA 92120
Ph (619) 280-9307 F (619) 284-3533

SPEC. NO. 8147

REGISTERED PROFESSIONAL ENGINEER JEAN M. LIBBY Exp. 03-31-15 CIVIL STATE OF CALIFORNIA

PLANS FOR THE CONSTRUCTION OF

South Mission Beach Lifeguard Station

General Notes S1.1

CITY OF SAN DIEGO, CALIFORNIA
ENGINEERING & CAPITAL PROJECTS
ARCHITECTURAL ENGINEERING & CONTRACTS DIVISION
SHEET 48 OF 94 SHEETS

WBS S-00791

APPROVED: FOR CITY ENGINEER — DATE 10/13/2014

SUBMITTED BY: JIHAD SLEIMAN, PROJECT MANAGER

DESCRIPTION	BY	APPROVED	DATE	FILMED
ORIGINAL	WH/TT			

YOUSIF BENYAMIN, PROJECT ENGINEER

218-1693

CCS27 COORDINATES

1858-6253

CCS83 COORDINATES

CONTRACTOR _____ DATE STARTED _____
INSPECTOR _____ DATE COMPLETED _____

32849-48-D

© COPYRIGHT October 09, 2014 at 10:21AM

Proprietary design: These drawings and design are protected by common law copyright. All patentable material contained herein and originating with Dominy + Associates Architects @ domusstudio LLP shall be the property of Dominy + Associates Architects @ domusstudio LLP

STEEL SHEET PILES

1. STEEL SHEET PILES SHALL BE AS MANUFACTURED BY NUCOR CORPORATION OR AN APPROVED EQUAL.
2. STEEL SHEET PILES SHALL BE MANUFACTURED FROM ASTM A690 GRADE 50 MATERIAL.
3. CONTRACTOR SHALL SUBMIT DATA ON SHEET PILE PROPOSED FOR USE. THIS DATA SHALL INCLUDE CROSS SECTION DATA, DATA ON THE MATERIAL FROM WHICH THE PILES WERE MANUFACTURED AND A CERTIFICATE OF CONFORMANCE.

WOOD

1. ALL WOOD MEMBERS SHALL BE DOUGLAS FIR/LARCH, CONFORMING TO CBC STANDARD 23-1 USING CURRENT WWPA GRADING RULES, UNLESS OTHERWISE NOTED. EACH PIECE OF LUMBER SHALL BE GRADE MARKED.

   HORIZONTAL FRAMING MEMBERS: THICKNESS 2" & 3": NO 2. ALL OTHER HORIZONTAL MEMBERS: NO 1, U.O.N.

   VERTICAL FRAMING MEMBERS: 4x AND 6x POSTS: NO 1. ALL OTHER VERTICAL MEMBERS: NO 2

2. ALL PLYWOOD SHALL CONFORM TO CBC STANDARD 23-2 AND SHALL BE IDENTIFIED WITH APA GRADE MARKS. SEE PLANS FOR THICKNESS.

   ROOF SHEATHING: . . . . . 1/2" STRUCTURAL I (24/16) OR ICC EQUAL
   3/4" STRUCTURAL I (48/24) OR ICC EQUAL

3. RUN LONG DIMENSION OF PLYWOOD PERPENDICULAR TO FRAMING MEMBERS. NAIL AS INDICATED ON PLANS WITH COMMON WIRE NAILS. PROVIDE 2x OR 3x BLOCKING AT JOINTS PERPENDICULAR TO FRAMING MEMBERS AS INDICATED ON PLAN. ALL FRAMING MEMBERS SHALL BE ON A 4'-0" MODULE TO COINCIDE WITH PLYWOOD PATTERN.
4. 2" SOLID BLOCKING SHALL BE PLACED BETWEEN ALL JOISTS AND RAFTERS AT SUPPORTS.
5. LAG SCREWS: PREDRILL WITH A BIT SIZE OF 65% OF THE SHANK DIAMETER FOR THE THREADED PORTION. LEAD HOLES SHALL BE THE SAME LENGTH AS THE UNTHREADED SHANK AND THE SAME DIAMETER AS THE SHANK. SCREW ALL LAGS INTO PLACE. CUT WASHERS SHALL BE PROVIDED UNDER HEADS WHICH BEAR ON WOOD.
6. BOLTS IN WOOD SHALL NOT BE LESS THAN 7 DIAMETERS FROM THE END AND 4 DIAMETERS FROM THE EDGE UNLESS OTHERWISE DETAILED.
7. DRILL HOLES 1/16 INCH LARGER IN DIAMETER THAN THE BOLT DIAMETER BEING USED. BOLT THREADS SHALL NOT BEAR ON WOOD. PROVIDE WASHERS WHERE BOLT HEAD OR NUT BEAR ON WOOD. PROVIDE SQUARE PLATE WASHERS FOR SILL BOLTS.
8. NO CHECKS OR SPLITS ALLOWED AT AREAS TO BE BOLTED.
9. ALL CONNECTORS SHALL BE BY SIMPSON STRONG-TIE COMPANY OR ICC EQUAL.
10. DIAPHRAGM (VERTICAL AND HORIZONTAL) SHEATHING NAILS OR OTHER APPROVED CONNECTORS SHALL BE DRIVEN SO THAT THEIR HEAD OR CROWN IS FLUSH WITH THE SURFACE OF THE SHEATHING.
11. ALL CONNECTORS AND FASTENERS SHALL BE HOT DIP GALVANIZED.

STRUCTURAL GLUED LAMINATED TIMBERS

1. MATERIAL, MANUFACTURER AND QUALITY CONTROL SHALL BE IN CONFORMANCE WITH CURRENT PROVISIONS OF AMERICAN NATIONAL STANDARD ANSI/AITC A190.1 AND ASTM D 3737, "DESIGN AND MANUFACTURER OF STRUCTURAL GLUED-LAMINATED TIMBER." MEMBERS SHALL BE MARKED WITH QUALITY MARK.
2. AN AMERICAN INSTITUTE OF TIMBER CONSTRUCTION (AITC) CERTIFICATE OF COMPLIANCE FOR GLUED LAMINATED WOOD MEMBERS SHALL BE GIVEN TO THE BUILDING INSPECTOR PRIOR TO INSTALLATION.
3. ADHESIVE SHALL MEET THE REQUIREMENTS FOR WET CONDITIONS OF SERVICE.
4. ALL SIMPLE SPAN BEAMS TO BE COMBINATION SYMBOL 24F-V4 IN CONFORMANCE WITH CURRENT VERSION OF AITC 117, "STANDARD SPECIFICATIONS FOR STRUCTURAL GLUED-LAMINATED TIMBER OF SOFTWOODS SPECIES."
5. ALL CANTILEVER BEAMS TO BE COMBINATION SYMBOL 24F-V8 IN CONFORMANCE WITH CURRENT VERSION OF AITC 117, "STANDARD SPECIFICATIONS FOR STRUCTURAL GLUED-LAMINATED TIMBER OF SOFTWOODS SPECIES."
6. MOISTURE CONTENT FOR STRUCTURAL GLUED-LAMINATED TIMBERS SHALL NOT EXCEED 16%.

© COPYRIGHT October 09, 2014 at 10:21AM

TABLE 23-11-B-1 NAILING SCHEDULE

. . . (MINIMUM UNLESS NOTED OTHERWISE) . . .

JOIST TO SILL OR GIRDER, TOENAIL	(3) 8d
BRIDGING TO JOIST, TOENAIL EACH END	(2) 8d
SOLE PLATE TO JOIST OR BLOCKING, TYPICAL FACE NAIL	16d @ 16" O.C.
SOLE PLATE TO JOIST OR BLOCKING AT BRACED WALL PANELS	(3) 16d PER 16"
TOP PLATE TO STUD END NAIL	(2) 16d
STUD TO SOLE PLATE	(4) 8d TOENAIL, OR (2) 16d, END NAIL
DOUBLE STUDS, FACE NAIL	16d @ 24" O.C.
DOUBLED TOP PLATES, TYPICAL FACE NAIL	16d @ 16" O.C.
DOUBLE TOP PLATES, LAP SPLICE	(8) 16d
BLOCKING BETWEEN JOISTS OR RAFTERS TO TOP PLATE, TOENAIL	(3) 8d
RIM JOIST TO TOP PLATE, TOENAIL	8d @ 6" O.C.
TOP PLATES, LAPS AND INTERSECTIONS, FACE NAIL	(2) 16d
CONTINUOUS HEADER, TWO PIECES	16d @ 16" O.C. ALONG EACH EDGE
CONTINUOUS HEADER TO STUD, TOENAIL	(4) 8d
RAFTER TO PLATE, TOENAIL	(3) 8d
BUILT-UP CORNER STUDS	16d @ 24" O.C. @ EACH BEARING
BUILT-UP GIRDER AND BEAMS	20d @ 32" O.C. TOP & BOTTOM & STAGGERED (2) 20d @ ENDS AND EACH SPLICE

NOTES:
1. COMMON OR BOX NAILS MAY BE USED EXCEPT WHERE OTHERWISE NOTED.

STRUCTURAL OBSERVATION

1. STRUCTURAL OBSERVATION SHALL BE PROVIDED BY THE ENGINEER OF RECORD IN ACCORDANCE WITH SECTION 1710 OF THE CALIFORNIA BUILDING CODE FOR THE FOLLOWING ITEMS:
   A. FOUNDATIONS.
   B. CONCRETE OR MASONRY BEARING AND SHEAR WALLS.
   C. REINFORCED CONCRETE COLUMNS, BEAMS AND SUPPORTED SLABS.
   G. WOOD FRAMING AND DIAPHRAGMS.
2. STRUCTURAL OBSERVATION IS REQUIRED IN ADDITION TO ALL OTHER INSPECTIONS.
3. STRUCTURAL OBSERVATION MEANS THE VISUAL OBSERVATION OF THE STRUCTURAL SYSTEM BY THE ENGINEER OF RECORD, FOR GENERAL CONFORMATION TO THE APPROVED PLANS AND SPECIFICATIONS, AT SIGNIFICANT CONSTRUCTION STAGES FOR THE ITEMS LISTED AND AT COMPLETION OF THE STRUCTURAL SYSTEM. STRUCTURAL OBSERVATION DOES NOT INCLUDE OR WAIVE THE RESPONSIBILITY FOR THE INSPECTIONS REQUIRED BY SECTION 110, 1704 OR OTHER SECTIONS OF THE CBC.
4. IT IS THE RESPONSIBILITY OF THE CONTRACTOR TO REQUEST STRUCTURAL OBSERVATION BY THE ENGINEER. THE ENGINEER SHALL BE GIVEN A MINIMUM OF TWO WORK DAYS NOTICE BY THE CONTRACTOR PRIOR TO PERFORMING STRUCTURAL OBSERVATION.

QUALITY CONTROL

1. THE SPECIAL INSPECTOR MUST BE CERTIFIED BY THE CITY OF SAN DIEGO, DEVELOPMENT SERVICES, IN THE CATEGORY OF WORK REQUIRED TO HAVE SPECIAL INSPECTION.
2. THE CONSTRUCTION MATERIALS TESTING LABORATORY MUST BE APPROVED BY THE CITY OF SAN DIEGO, DEVELOPMENT SERVICES, FOR TESTING OF MATERIALS, SYSTEMS, COMPONENTS AND EQUIPMENT.
3. FABRICATOR MUST BE REGISTERED AND APPROVED BY THE CITY OF SAN DIEGO, DEVELOPMENT SERVICES, FOR THE FABRICATION OF MEMBERS AND ASSEMBLIES ON THE PREMISES OF THE FABRICATOR'S SHOP.
4. FABRICATOR SHALL SUBMIT AN "APPLICATION TO PERFORM OFF-SITE FABRICATION" TO THE INSPECTION SERVICES DIVISION FOR APPROVAL PRIOR TO THE COMMENCEMENT OF FABRICATION.
5. FABRICATOR SHALL SUBMIT A "CERTIFICATE OF COMPLIANCE FOR OFF-SITE FABRICATION" TO THE INSPECTION SERVICES DIVISION PRIOR TO ERECTION OF FABRICATED ITEMS AND ASSEMBLIES.
6. THE SPECIAL INSPECTIONS IDENTIFIED ON PLANS ARE, IN ADDITION TO, AND NOT SUBSTITUTE FOR, THOSE INSPECTIONS REQUIRED TO BE PERFORMED BY A CITY'S BUILDING INSPECTOR.
7. FABRICATION OF MEMBERS AND ASSEMBLIES DONE IN FABRICATOR'S SHOP APPROVED BY INSPECTION SERVICES NEED NOT HAVE CONTINUOUS OR PERIODIC SPECIAL INSPECTION. AT COMPLETION OF FABRICATION, THE APPROVED FABRICATOR SHALL SUBMIT THE "CERTIFICATE OF COMPLIANCE" FORM TO INSPECTION SERVICES.

SPECIAL INSPECTION

SPECIAL INSPECTION SHALL BE IN ACCORDANCE WITH THE FOLLOWING:

1. STRUCTURAL STEEL AND WELDING: CBC SECTION 1704.3 AND TABLE 1704.3.
2. CONCRETE CONSTRUCTION: CBC SECTION 1704.4 AND TABLE 1704.4.
3. MASONRY CONSTRUCTION: CBC SECTION 1704.5 AND TABLE 1704.5.1 (LEVEL 1 INSPECTION).
4. WOOD CONSTRUCTION: CBC SECTION 1704.6.
5. SOIL CONDITIONS, FILL PLACEMENT AND LOAD BEARING REQUIREMENTS: CBC SECTION 1704.7 AND TABLE 1704.7.
6. SPRAYED FIRE-RESISTANT MATERIALS: CBC SECTION 1704.10.1 AND TABLE 1704.10.5.
7. MASTIC AND INTUMESCENT FIRE-RESISTING COATING: CBC SECTION 1704.11.
8. POST INSTALLED ANCHORS: CBC SECTION 1704.4 AND TABLE 1704.4.
   A. DRILLED IN ANCHORS.
   B. ADHESIVE ANCHORS.
9. CONTRACTOR OR CONSTRUCTION MANAGER SHALL PROVIDE A WRITTEN STATEMENT ACKNOWLEDGING SPECIAL INSPECTIONS, STATING QUALITY CONTROL PROCEDURES INCLUDING METHOD, FREQUENCY & DISTRIBUTION OF REPORTS. THE STATEMENT SHALL ALSO IDENTIFY INDIVIDUALS EXERCISING CONTROL INCLUDING QUALIFICATIONS AND POSITION IN ORGANIZATION. THIS SHALL BE SUBMITTED PRIOR TO THE START OF WORK.
10. A CERTIFICATE OF SATISFACTORY COMPLETION OF WORK REQUIRING SPECIAL INSPECTION MUST BE COMPLETED AND SUBMITTED TO THE INSPECTION SERVICES DIVISION.
11. THE SPECIAL INSPECTIONS LISTED, ARE IN ADDITION TO, THE CALLED INSPECTIONS REQUIRED BY SECTION 108 OF THE CBC, AS AMENDED. SPECIAL INSPECTION IS NOT A SUBSTITUTE FOR INSPECTIONS REQUIRED TO BE PERFORMED BY A CITY BUILDING INSPECTOR.
12. THE SPECIAL INSPECTIONS MUST BE CERTIFIED BY THE CITY OF SAN DIEGO TO PERFORM THE TYPE OF INSPECTION SPECIFIED. EXCEPTIONS:
    A. SOILS INSPECTIONS BY THE SOILS ENGINEER OF RECORD.
    B. WHEN WAIVED BY THE BUILDING OFFICIAL.
13. IT IS THE RESPONSIBILITY OF THE CONTRACTOR TO NOTIFY THE SPECIAL INSPECTOR OR INSPECTION AGENCY AT LEAST ONE WORKING DAY PRIOR TO PERFORMING ANY WORK THAT REQUIRES SPECIAL INSPECTION.
14. SPECIALLY INSPECTED WORK THAT IS INSTALLED OR COVERED WITHOUT THE APPROVAL OF THE CITY INSPECTOR IS SUBJECT TO REMOVAL OR EXPOSURE.
15. THE SPECIAL INSPECTOR SHALL SUBMIT IN WRITING A REPORT OF OBSERVATIONS AND TESTING FOR EACH INSPECTION.
16. THE INSPECTOR SHALL REPORT IN ADVANCE THEIR ASSIGNMENT TO THE CITY OF SAN DIEGO BUILDING INSPECTION DEPARTMENT.

TABLE 1704.3
REQUIRED VERIFICATION AND INSPECTION OF STEEL CONSTRUCTION

VERIFICATION AND INSPECTION	CONTIN-UOUS	PERI-ODIC	REFERENCED STANDARD[a]	IBC REFERENCE
1. MATERIAL VERIFICATION OF STRUCTURAL STEEL:				
a. IDENTIFICATION MARKINGS TO CONFORM TO AISC 360.	–	–	AISC 360, SECTION M5.5	
b. MANUFACTURERS' CERTIFIED MILL TEST REPORTS.	–	X	–	
2. MATERIAL VERIFICATION OF WELD FILLER MATERIALS:				
a. IDENTIFICATION MARKINGS TO CONFORM TO AWS SPECIFICATION IN THE APPROVED CONSTRUCTION DOCUMENTS.	–	X	AISC 360, SECTION A3.5 & APPLICABLE AWS AS DOCUMENTS	–
b. MANUFACTURER'S CERTIFICATE OF COMPLIANCE REQUIRED.	–	X	–	–
3. INSPECTION OF WELDING:				
a. STRUCTURAL STEEL AND COLD-FORMED STEEL DECK:				
1) COMPLETE AND PARTIAL PENETRATION GROOVE WELDS.	X	–	AWS D1.1	1704.3.1
2) MULTIPASS FILLET WELDS.	X	–		
3) SINGLE-PASS FILLET WELDS > 5/16".	X	–		
5) SINGLE-PASS FILLET WELDS ≤ 5/16".	–	X		

FOR SI: 1 INCH = 25.4 mm.
a. WHERE APPLICABLE, SEE ALSO SECTION 1707.1, SPECIAL INSPECTION FOR SEISMIC RESISTANCE.

SPECIAL INSPECTION (CONTINUED)

TABLE 1704.4
REQUIRED VERIFICATION AND INSPECTION OF CONCRETE CONSTRUCTION

VERIFICATION AND INSPECTION	CONTIN-UOUS	PERI-ODIC	REFERENCED STANDARD[a]	IBC REFERENCE
1. INSPECTION OF REINFORCING STEEL AND PLACEMENT.	–	X	ACI 318: 3.5, 7.1-7.7	1913.4
2. INSPECT BOLTS TO BE INSTALLED IN CONCRETE PRIOR TO AND DURING PLACEMENT OF CONCRETE WHERE ALLOWABLE LOADS HAVE BEEN INCREASED.	X	–	ACI 318: 8.1.3, 21.2.8	1911.5
3. INSPECTIONS OF ANCHORS INSTALLED IN HARDENED CONCRETE.	–	X	ACI 318: 3.8.6, 8.1.3, 21.2.8	1912.1
4. VERIFYING USE OF REQUIRED DESIGN MIX.	–	X	ACI 318: CH. 4, 5.2-5.4	1904.2.2, 1913.2, 1913.3
5. AT THE TIME FRESH CONCRETE IS SAMPLED TO FABRICATE SPECIMENS FOR STRENGTH TESTS, PERFORM SLUMP AND AIR CONTENT TESTS, AND DETERMINE THE TEMPERATURE OF THE CONCRETE.	X	–	ASTM C 172 ASTM C 31 ACI 318: 5.6, 5.8	1913.10
6. INSPECTION OF CONCRETE AND SHOTCRETE PLACEMENT FOR PROPER APPLICATION TECHNIQUES.	X	–	ACI 318: 5.9, 5.10	1913.6, 1913.7, 1913.8
7. INSPECTION FOR MAINTENANCE OF SPECIFIED CURING TEMPERATURE AND TECHNIQUES.	–	X	ACI: 5.11-5.13	1913.9
8. ERECTION OF PRECAST CONCRETE MEMBERS.	–	X	ACI 318: CH. 16	–
9. INSPECT FORMWORK FOR SHAPE, LOCATION AND DIMENSIONS OF THE CONCRETE MEMBER BEING FORMED.	–	X	ACI 318: 6.1.1	–

TABLE 1704.5.1
LEVEL 1 SPECIAL INSPECTION

INSPECTION TASK	FREQUENCY OF INSPECTION		REFERENCE FOR CRITERIA		
	CONTIN-UOUS	PERIODIC	IBC SECTION	TMS 602/ ACI 530/ ASCE 5[b]	TMS 602/ ACI 530.1/ ASCE 6[b]
1. COMPLIANCE WITH REQUIRED INSPECTION PROVISIONS OF THE CONSTRUCTION DOCUMENTS AND THE APPROVED SUBMITTALS SHALL BE VERIFIED.	–	X	–	–	ART 1.5
2. VERIFICATION OF f'_m AND f'_{AAC} PRIOR TO CONSTRUCTION EXCEPT WHERE SPECIFICALLY EXEMPTED BY THIS CODE.	–	X	–	–	ART 1.4B
3. VERIFICATION OF SLUMP FLOW AND VSI AS DELIVERED TO THE SITE FOR SELF-CONSOLIDATING GROUT.	X	–	–	–	ART 1.5B.1.b.3
4. AS MASONRY CONSTRUCTION BEGINS, THE FOLLOWING SHALL BE VERIFIED TO ENSURE COMPLIANCE:					
a. PROPORTIONS OF SITE-PREPARED MORTAR.	–	X	–	–	ART 2.6A
b. CONSTRUCTION OF MORTAR JOINTS.	–	X	–	–	ART 3.3B
c. LOCATION OF REINFORCEMENT, CONNECTORS AND ANCHORAGES.	–	X	–	–	ART 3.4, 3.6A
d. GRADE AND SIZE OF ANCHORAGES.	–	X	–	–	ART 2.4B, 2.4H

SPECIAL INSPECTION (CONTINUED)

TABLE 1704.5.1 (CONTINUED)
LEVEL 1 SPECIAL INSPECTION

5. DURING CONSTRUCTION THE INSPECTION PROGRAM SHALL VERIFY:					
a. SIZE AND LOCATION OF STRUCTURAL ELEMENTS.	–	X	–	–	ART 3.3F
b. TYPE, SIZE AND LOCATION OF ANCHORS, INCLUDING OTHER DETAILS OF ANCHORAGE OF MASONRY TO STRUCTURAL MEMBERS, FRAMES OR OTHER CONSTRUCTION.	–	X	–	SEC 1.2.2(e), 1.16.1	–
c. SPECIFIED SIZE, GRADE AND TYPE OF REINFORCEMENT, ANCHOR BOLTS AND ANCHORAGES.	–	X	–	SEC 1.15	ART 2.4, 3.4
d. WELDING OF REINFORCING BARS.	X	–	–	SEC 2.1.9.7.2, 3.3.3.4(b)	–
e. PREPARATION, CONSTRUCTION AND PROTECTION OF MASONRY DURING COLD WEATHER (TEMPERATURE BELOW 40°F) OR HOT WEATHER (TEMPERATURE ABOVE 90°F).	–	X	SEC 2104.3, 2104.4	–	ART 1.8C, 1.8D
6. PRIOR TO GROUTING, THE FOLLOWING SHALL BE VERIFIED TO ENSURE COMPLIANCE:					
a. GROUT SPACE IS CLEAN.	–	X	–	–	ART 3.2D
b. PLACEMENT OF REINFORCEMENT, AND ANCHORAGES CONNECTORS	–	X	–	SEC 1.13	ART 3.4
c. PROPORTIONS OF SITE-PREPARED GROUT	–	X	–	–	ART 2.6B
d. CONSTRUCTION OF MORTAR JOINTS.	–	X	–	–	ART 3.3B
7. GROUT PLACEMENT SHALL BE VERIFIED TO ENSURE COMPLIANCE:	X	–	–	–	ART 3.5
8. PREPARATION OF ANY REQUIRED GROUT SPECIMENS, MORTAR SPECIMENS AND/OR PRISMS SHALL BE OBSERVED.	–	X	SEC 2105.2.2, 2105.3	–	ART 1.4

FOR SI: °C = [(°F) – 32]/1.8.
a. THE SPECIFIC STANDARDS REFERENCED ARE THOSE LISTED IN CHAPTER 35.

S-2

MARTIN & LIBBY
STRUCTURAL ENGINEERS
4452 Glacier Avenue, San Diego, CA 92120
Ph (619) 280-9307 F (619) 284-3533

SPEC. NO. 8147

REGISTERED PROFESSIONAL ENGINEER JEAN M. LIBBY Exp. 03-31-15 CIVIL STATE OF CALIFORNIA

PLANS FOR THE CONSTRUCTION OF

South Mission Beach Lifeguard Station

General Notes — S1.2

CITY OF SAN DIEGO, CALIFORNIA
ENGINEERING & CAPITAL PROJECTS
ARCHITECTURAL ENGINEERING & CONTRACTS DIVISION
SHEET 49 OF 94 SHEETS

APPROVED: _____ FOR CITY ENGINEER — DATE 10/13/2014

WBS S-00791

SUBMITTED BY: JIHAD SLEIMAN, PROJECT MANAGER

DESCRIPTION	BY	APPROVED	DATE	FILMED
ORIGINAL	WH/TT			

YOUSIF BENYAMIN, PROJECT ENGINEER
218-1693
CCS27 COORDINATES
1858-6253
CCS83 COORDINATES

CONTRACTOR _____ DATE STARTED _____
INSPECTOR _____ DATE COMPLETED _____

32849-49-D

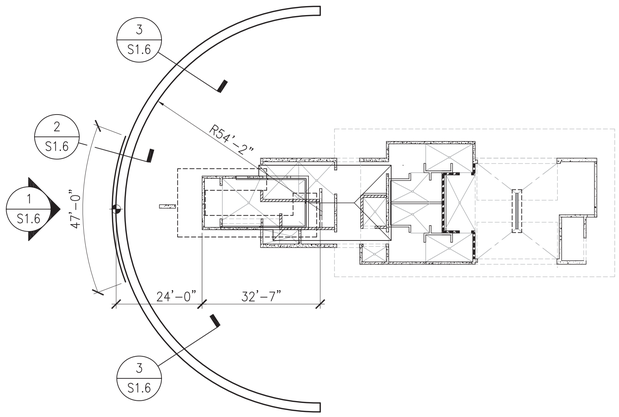

N

SHEET PILE PLAN

SCALE: 1" = 20'-0"

A

SPECIAL INSPECTION (CONTINUED)

TABLE 1704.7
REQUIRED VERIFICATION AND INSPECTION OF SOILS

VERIFICATION AND INSPECTION TASK	CONTINUOUS DURING TASK LISTED	PERIODICALLY DURING TASK LISTED
1. VERIFY MATERIALS BELOW FOOTINGS ARE ADEQUATE TO ACHIEVE THE DESIGN BEARING CAPACITY.	–	X
2. VERIFY EXCAVATIONS ARE EXTENDED TO PROPER DEPTH AND HAVE REACHED PROPER MATERIAL.	–	X
3. PERFORM CLASSIFICATION AND TESTING OF CONTROLLED FILL MATERIALS.	–	X
4. VERIFY USE OF PROPER MATERIALS, DENSITIES AND LIFT THICKNESS DURING PLACEMENT AND COMPACTION OF CONTROLLED FILL.	X	–
5. PRIOR TO PLACEMENT OF CONTROLLED FILL, OBSERVE SUBGRADE AND VERIFY THAT SITE HAS BEEN PREPARED PROPERLY.	–	X

SPECIAL INSPECTION (CONTINUED)

TABLE 1704.8
REQUIRED VERIFICATION AND INSPECTION OF PILE FOUNDATIONS TABLE

VERIFICATION AND INSPECTION TASK	CONTINUOUS DURING TASK LISTED	PERIODICALLY DURING TASK LISTED
1. VERIFY PILE MATERIALS, SIZES AND LENGTHS COMPLY WITH THE REQUIREMENTS.	X	–
2. DETERMINE CAPACITIES OF TEST PILES AND CONDUCT ADDITIONAL LOAD TESTS, AS REQUIRED.	X	–
3. OBSERVE DRIVING OPERATIONS AND MAINTAIN COMPLETE AND OCCURATE RECORDS FOR EACH PILE.	X	–
4. VERIFY PLACEMENT LOCATIONS AND PLUMBNESS, CONFIRM TYPE AND SIZE OF HAMMER, RECORD NUMBER OF BLOWS PER FOOT OF PENETRATION, DETERMINE REQUIRED PENETRATIONS TO ACHIEVE DESIGN CAPACITY, RECORD TIP AND BUTT ELEVATIONS AND DOCUMENT ANY PILE DAMAGE.	X	–
7. FOR SPECIALTY PILES, PERFORM ADDITONAL INSPECTIONS AS DETERMINED BY THE REGISTERED DESIGN PROFESSIONAL IN RESPONSIBLE CHARGE.	–	–

ABBREVIATIONS

&	AND
@	AT
A.B.	ANCHOR BOLT
ABV	ABOVE
A.C.	ASPHALT CONCRETE
A/C	AIR CONDITIONING
ADDL	ADDITIONAL
ALT	ALTERNATE
APPROX	APPROXIMATE
ARCH	ARCHITECT(URAL)
A.F.	BRACED FRAME
BLDG	BUILDING
BLK	BLOCK(ING)
BLKD	BLOCKED
BLW	BELOW
BM	BEAM
A.N.	BOUNDARY NAILING
B.O.F.	BOTTOM OF FOOTING
BRG	BEARING
BTM(B)	BOTTOM
BTWN	BETWEEN
C=	CAMBER
C.I.P.	CAST IN PLACE
C.J.	CONSTRUCTION JOINT
C.L. (℄)	CENTER LINE
CLG	CEILING
CLR	CLEAR(ANCE)
CNTR	CENTER(ED)
C.M.U.	CONCRETE MASONRY UNIT
COL	COLUMN
CONC	CONCRETE
CONN	CONNECT(ION)(OR)
CONST	CONSTRUCT(ION)
CONT	CONTINUOUS
CSK	COUNTERSINK
C.Y.	CUBIC YARD(S)
d	PENNY(NAILS)
DBL	DOUBLE
DEPT	DEPARTMENT
DIA (ø)	DIAMETER
DO, do	DITTO
DWG	DRAWINGS(S)
DWL	DOWEL(S)
(E)	EXISTING
EA	EACH
E.Z.	EACH FACE
E.J.	EXPANSION JOINT
EL	ELEVATION
ELEC	ELECTRICAL
ELEV	ELEVATOR
EMBED	EMBED(ED)(MENT)
E.N.	EDGE NAILING
EQ	EQUAL
EQUIP	EQUIPMENT
E.S.	EACH SIDE
E.W.	EACH WAY
EXIST (E)	EXISTING
EXP	EXPANSION
EXT	EXTERIOR
FDN	FOUNDATION
F.F.	FINISHED FLOOR
FIN	FINISH(ED)
FLR	FLOOR
FLNG	FLANGE
F.N.	FIELD NAILING
F.O.	FACE OF
F.O.C.	FACE OF CONCRETE
F.O.M.	FACE OF MASONRY
F.O.S.	FACE OF STUD
F.P.	FULL PENETRATION
FRMG	FRAMING
F.S.	FAR SIDE
FT	FOOT(FEET)
FTG	FOOTING
F.V.	FIELD VERIFY
GA	GAUGE(GAGE)
GALV	GALVANIZE(D)
G.L.	GLUE LAMINATED
G.L.B.	GLUED LAMINATED BEAM
GRD	GRADE
GYP	GYPSUM
GYP.BD.	GYPSUM WALLBOARD
HD	HOLDOWN
H.D.G.	HOT DIPPED GALVANIZED
HDR	HEADER
HGR	HANGER
HORIZ(H)	HORIZONTAL
H.S.B.	HIGH STRENGTH BOLT
HSS	HOLLOW STRUCTURAL SECTION
HT	HEIGHT
I.D.	INSIDE DIAMETER
IN	INCH(ES)
INT	INTERIOR
JST	JOIST
JT	JOINT
L	LONG(LENGTH)
LB	POUND(S)
Ld	DEVELOPMENT LENGTH
L.L.H.	LONG LEG HORIZONTAL
L.L.V.	LONG LEG VERTICAL
LONGIT	LONGITUDINAL
LTWT	LIGHTWEIGHT
MAS	MASONRY
MATL	MATERIAL
MAX	MAXIMUM
M.B.	MACHINE BOLT
MECH	MECHANICAL
MEZZ	MEZZANINE
MFR	MANUFACTURER
MIN	MINIMUM
MISC	MISCELLANEOUS
M.L.L.W.	MEAN LOWER LOW WATER
M.S.L.	MEAN SEA LEVEL
MTL	METAL
(N)	NEW
N.I.C.	NOT IN CONTRACT
NLG	NAILING
No. (#)	NUMBER
N.S.	NEAR SIDE
N.T.S.	NOT TO SCALE
O.C.	ON CENTER
O.D.	OUTSIDE DIAMETER
O.H.	OPPOSITE HAND
OPNG	OPENING
OPP	OPPOSITE
PC	PIECE
P/C	PRECAST
P.C.C.	PRECAST CONCRETE
PL P.L.	PLATE
(℄)	PROPERTY LINE
PLYWD	PLYWOOD
P.L.F.	POUNDS PER LINEAR FOOT
PNL	PANEL(S)
P/S	PRESTRESS(ED)
P.S.F.	POUNDS PER SQUARE FOOT
P.S.I.	POUNDS PER SQUARE INCH
P.T.	PRESSURE TREATED
R	RADIUS
R.B.S.	REDUCED BEAM SECTION
R.C.P.	REINF CONC PIPE
REF	REFERENCE
REINF	REINFORCE(ING)(MENT)
REQD	REQUIRED
RF	ROOF
R.W.	RETAINING WALL
RWD	REDWOOD
S.C.	SHEAR CONNECTOR
S.CRIT.	SLIP CRITICAL
SCHED	SCHEDULE(D)
SECT	SECTION
SHT	SHEET
SHTG	SHEATHING
SIM	SIMILAR
S.M.S.	SHEET METAL SCREW
S.O.G.	SLAB ON GRADE
SPCG	SPACING
SPEC	SPECIFICATION(S)
SQ	SQUARE
STD	STANDARD
STGR	STAGGER(ED)
STIFF	STIFFEN(ER)
STIR	STIRRUP(S)
STL	STEEL
STRUCT	STRUCTURAL
SYMM	SYMMETRICAL
T	TOP
T&B	TOP & BOTTOM
T&G	TONGUE & GROOVE
T.C.	TOP OF CURB
T.G.	TAPERED GIRDER
THK	THICK(NESS)
THRD	THREAD(ED)
T.N.	TOE NAIL(ING)
T.O.	TOP OF
T.O.C.	TOP OF CONCRETE
T.O.F.	TOP OF FOOTING
T.O.P.	TOP OF PARAPET
T.O.S.	TOP OF STEEL
TOT	TOTAL
T.O.W.	TOP OF WALL
TRANS	TRANSVERSE
T.S.G.	TAPERED STEEL GIRDER
TYP	TYPICAL
U.B.C.	UNIFORM BUILDING CODE
UNBLKD	UNBLOCKED
U.O.N.	UNLESS OTHERWISE NOTED
VERT(V)	VERTICAL
W	WIDTH(WIDE)
W/	WITH
WD	WOOD
W.H.S.	WELDED HEADED STUD
W/O	WITHOUT
W.P.	WORK POINT
WT	WEIGHT
W.T.S.	WELDED THREADED STUD
W.W.F.	WELDED WIRE FABRIC
X-STG	EXTRA STRONG
XX-STG	DOUBLE EXTRA STRONG
YD	YARD

S-3

SPEC. NO. 8147

MARTIN & LIBBY
STRUCTURAL ENGINEERS
4452 Glacier Avenue, San Diego, CA 92120
Ph (619) 280-9307 F (619) 284-3533

REGISTERED PROFESSIONAL ENGINEER JEAN M. LIBBY Exp. 03-31-13 CIVIL STATE OF CALIFORNIA

PLANS FOR THE CONSTRUCTION OF

South Mission Beach Lifeguard Station

Sheet Pile Plan, General Notes & Abbreviations | S1.3

CITY OF SAN DIEGO, CALIFORNIA
ENGINEERING & CAPITAL PROJECTS
ARCHITECTURAL ENGINEERING & CONTRACTS DIVISION
SHEET 50 OF 94 SHEETS

APPROVED: FOR CITY ENGINEER — DATE 10/13/2014

WBS S-00791

SUBMITTED BY: JIHAD SLEIMAN, PROJECT MANAGER

DESCRIPTION	BY	APPROVED	DATE	FILMED
ORIGINAL	WH/TT			

YOUSIF BENYAMIN, PROJECT ENGINEER
218-1693
CCS27 COORDINATES
1858-6253
CCS83 COORDINATES

CONTRACTOR _____ DATE STARTED _____
INSPECTOR _____ DATE COMPLETED _____

32849-50-D

Proprietary designs: These drawings and design are protected by common law copyright. All patentable material contained herein and originating with Dominy + Associates Architects @ domusstudio LLP shall be the property of Dominy + Associates Architects @ domusstudio LLP
© COPYRIGHT October 09, 2014 at 10:21AM

Proprietary designs: These drawings and design are protected by common law copyright. All patentable material contained herein and originating with Dominy + Associates Architects @ domusstudio LLP shall be the property of Dominy + Associates Architects @ domusstudio LLP

TABLE 1 – PRIMARY REINFORCEMENT		
BAR BEND	BAR SIZE	MIN BEND DIA *
ALL GRADES OF REINFORCEMENT	#3 THRU #8	6 BAR DIA
	#9, #10 & #11	8 BAR DIA
	#14 & #18	10 BAR DIA

TABLE 2 – STIRRUP & TIE REINFORCEMENT	
BAR SIZE	MIN BEND DIA *
#3 THRU #5	4 BAR DIA
ALL OTHER BARS	SEE TABLE 1

NOTES:
* MEASURED ON INSIDE OF BAR
1. ALL REINFORCEMENT BENT COLD.
2. FIELD BENDING NOT PERMITTED U.O.N.

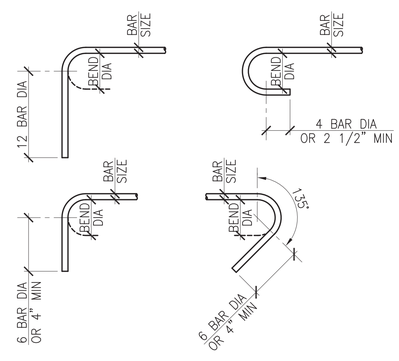

REINFORCEMENT HOOKS
SCALE: NONE — 1

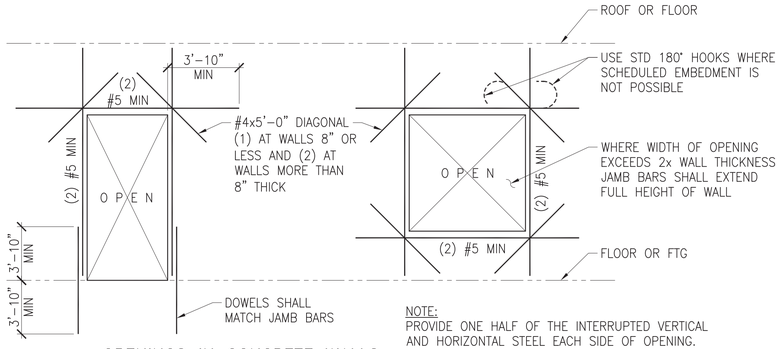

NOTE:
PROVIDE ONE HALF OF THE INTERRUPTED VERTICAL AND HORIZONTAL STEEL EACH SIDE OF OPENING.

OPENINGS IN CONCRETE WALLS
SCALE: NONE — 2

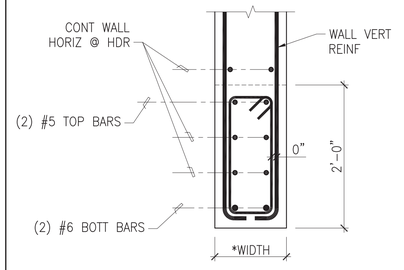

* WIDTH TO MATCH WALL THICKNESS

TYPICAL CONC HEADER (L = 6'–0" MAX)
SCALE: 1" = 1'–0" — 12

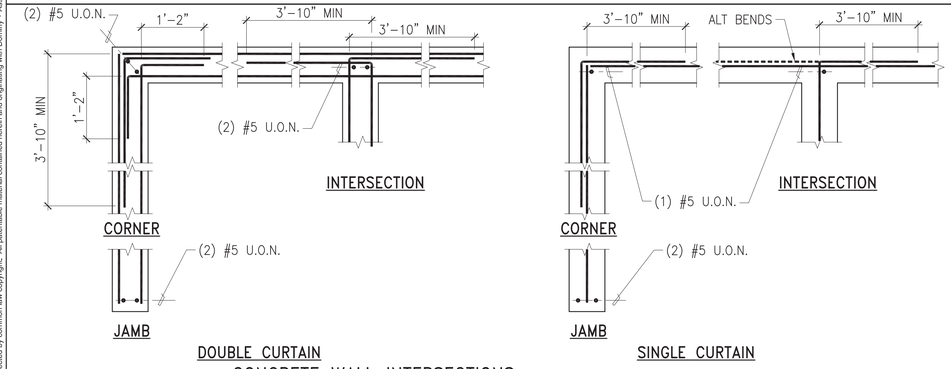

CONCRETE WALL INTERSECTIONS
SCALE: 3/4" = 1'–0" — 3

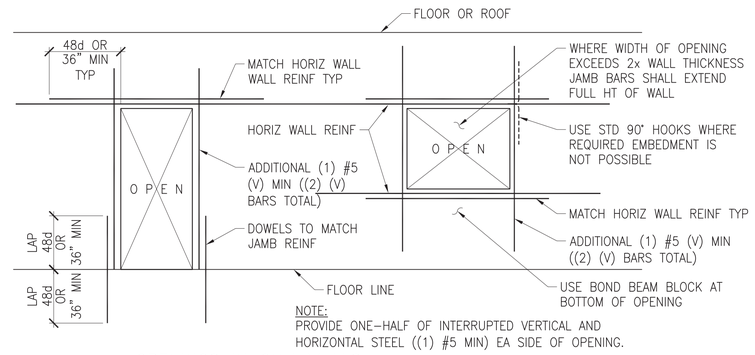

NOTE:
PROVIDE ONE–HALF OF INTERRUPTED VERTICAL AND HORIZONTAL STEEL ((1) #5 MIN) EA SIDE OF OPENING.

OPENINGS IN CMU WALLS
SCALE: NONE — 4

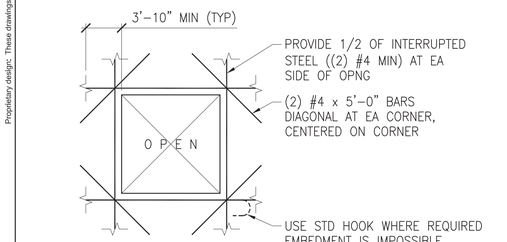

NOTES:
1. THIS DETAIL IS APPLICABLE AT OPENINGS WHERE ANY SIDE IS GREATER THAN 1'–0".
2. FOR OPENINGS SMALLER THAN 1'–0", BEND ALL REINF AROUND OPENING.

REINF AT CONC SLAB OPENINGS
SCALE: NONE — 5

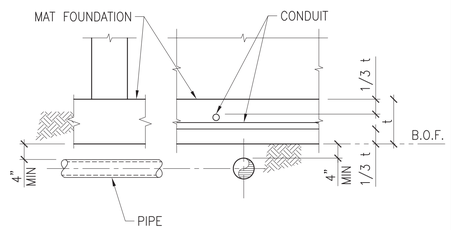

PIPES & CONDUITS AT MAT FOUNDATION
SCALE: 1/2" = 1'–0" — 6

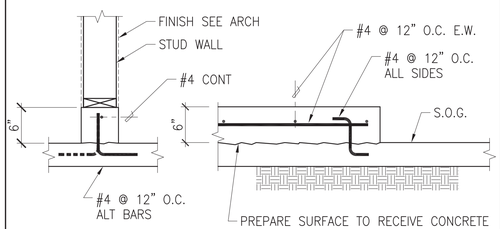

TYPICAL HOUSEKEEPING PAD/CURB
SCALE: 1" = 1'–0" — 7

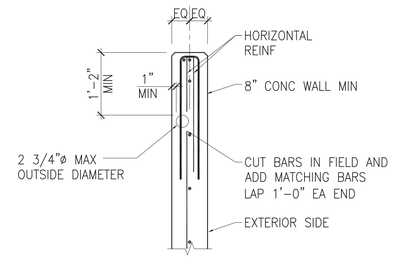

PLAN VIEW PIPES IN CONC WALL
SCALE: 3/4" = 1'–0" — 8

REINFORCEMENT LAP SPLICE AND EMBEDMENT LENGTH							
BAR SIZE	CLASS A ** MIN LAP LENGTH (IN)		CLASS B ** MIN LAP LENGTH (IN)		** MIN EMBED LENGTH (IN)		
	TOP BARS	OTHER BARS	TOP BARS	OTHER BARS	STRAIGHT BARS TOP BARS	STRAIGHT BARS OTHER BARS	W/STD HOOK
#3	24	21	31	27	24	21	6
#4	32	28	41	37	32	28	8
#5	40	35	52	46	40	35	14
#6	48	42	62	55	48	42	17
#7	69	61	90	79	69	61	20
#8	79	70	103	91	79	70	23
#9	89	79	115	102	89	79	25
#10	99	89	128	113	99	87	28
#11	109	96	141	125	108	96	31

fc = 4,200 P.S.I. Fy = 60,000 P.S.I.

** FOR BAR CLEAR SPACING LESS THAN 2 BAR DIAMETERS, ADD 50%.

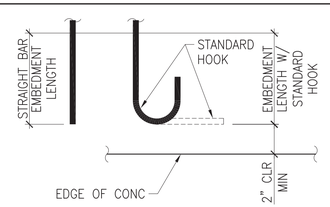

NOTES:
1. MIN LAP ALL BARS CLASS 'B' UNLESS OTHERWISE NOTED.
2. STAGGER LAP OF HORIZONTAL WALL BARS.
3. TOP BARS ARE HORIZONTAL BARS W/MORE THAN 12" DEPTH OF CONCRETE CAST BELOW THE REINFORCEMENT. MULTIPLE HORIZONTAL BARS IN A SINGLE VERTICAL PLAN SUCH AS COLUMN TIES OR HORIZONTAL BARS IN WALLS ARE NOT TOP BARS.

EPOXY COATED REBAR SPLICE (CLASS A & B) & EMBEDMENT
SCALE: NONE — 9

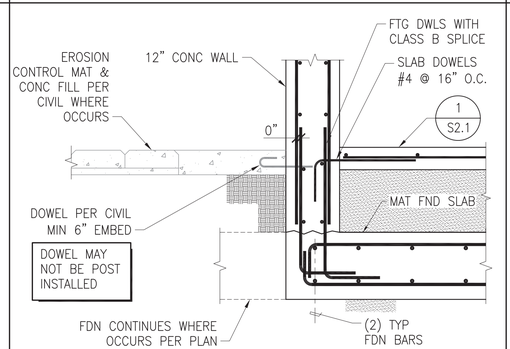

TYP 12" WALL
SCALE: 3/4" = 1'–0" — 10

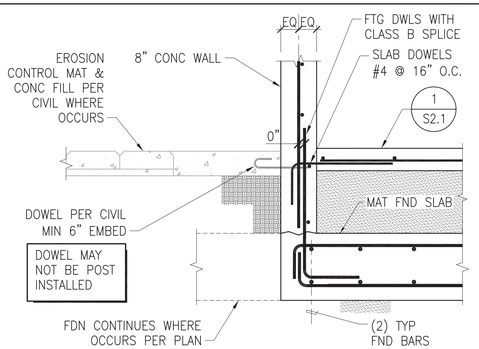

TYP 8" WALL
SCALE: 3/4" = 1'–0" — 11

S-4

MARTIN & LIBBY
STRUCTURAL ENGINEERS
4452 Glacier Avenue, San Diego, CA 92120
Ph (619) 280-9307 F (619) 284-3533

SPEC. NO. 8147

PLANS FOR THE CONSTRUCTION OF
South Mission Beach Lifeguard Station

Typical Details — S1.4

CITY OF SAN DIEGO, CALIFORNIA
ENGINEERING & CAPITAL PROJECTS
ARCHITECTURAL ENGINEERING & CONTRACTS DIVISION
SHEET 51 OF 94 SHEETS

APPROVED: FOR CITY ENGINEER — DATE 10/13/2014

WBS S-00791

SUBMITTED BY: JIHAD SLEIMAN, PROJECT MANAGER

DESCRIPTION	BY	APPROVED	DATE	FILMED
ORIGINAL	WH/TT			

YOUSIF BENYAMIN, PROJECT ENGINEER
218–1693
CCS27 COORDINATES
1858–6253
CCS83 COORDINATES

CONTRACTOR _____ DATE STARTED _____
INSPECTOR _____ DATE COMPLETED _____

32849–51–D

© COPYRIGHT October 09, 2014 at 10:21 AM

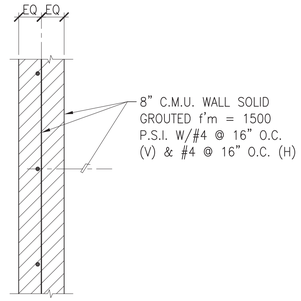

TYPICAL C.M.U. WALL
SCALE: 1" = 1'-0"

1

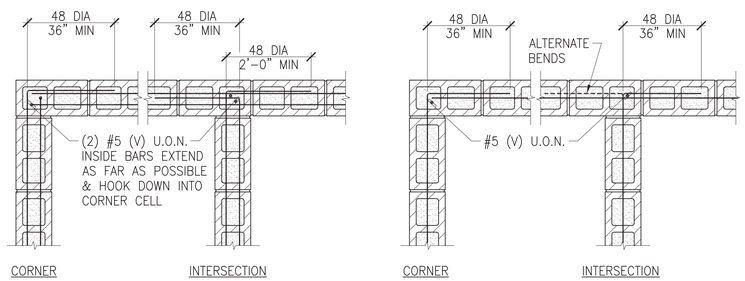

CMU WALL INTERSECTIONS
SCALE: NONE

2

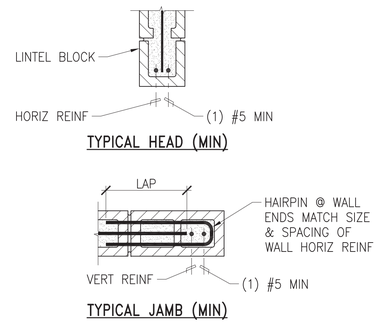

CMU WALL HEAD & JAMB REINFORCEMENT
SCALE: NONE

3

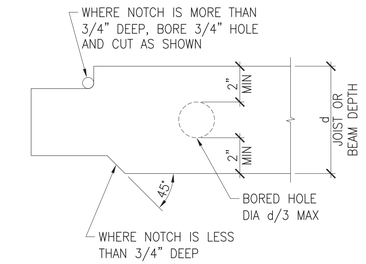

NOTES:
1. MAXIMUM DEPTH OF NOTCH @ ENDS OF MEMBER = d/4.
2. MAXIMUM DEPTH OF NOTCH IN SPAN LENGTH = d/6.
3. NOTCHING IN MIDDLE 1/3 OF SPAN NOT ALLOWED.

JOIST OR BEAM NOTCH
SCALE: NONE

4

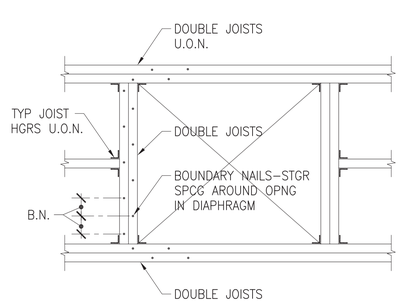

ROOF FRAMING @ OPENINGS
SCALE: NONE

5

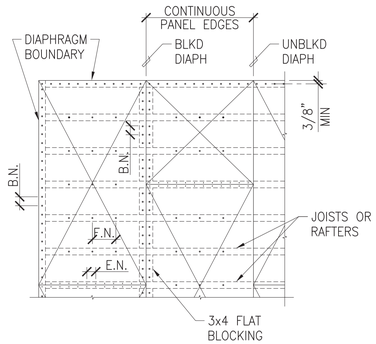

DIAPHRAGM NAILING ROOF
SCALE: NONE

6

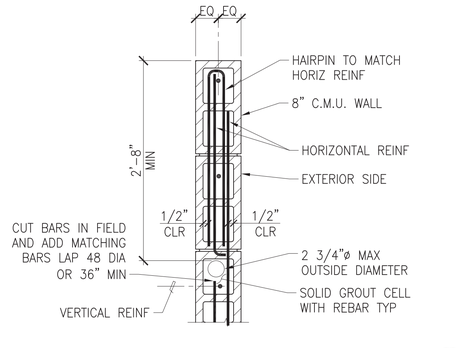

PLAN VIEW PIPES IN C.M.U. WALL
SCALE: 1" = 1'-0"

7

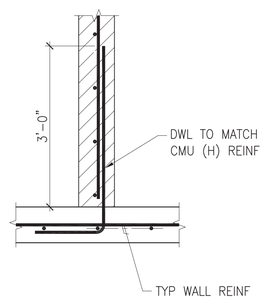

PLAN
SCALE: 3/4" = 1'-0"

8

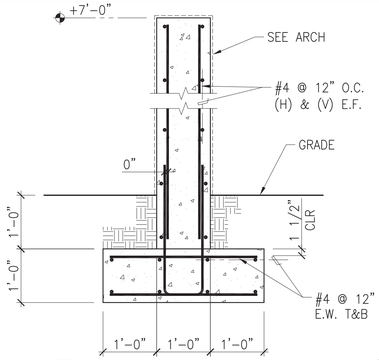

SITE WALL
SCALE: 3/4" = 1'-0"

9

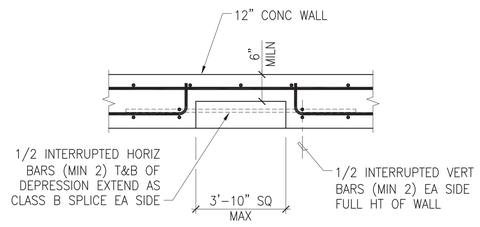

PLAN

NOTE: REINF AS AN OPENING IN CONC WALL.

DEPRESSED WALL AT SIGNAGE
SCALE: 3/4" = 1'-0"

10

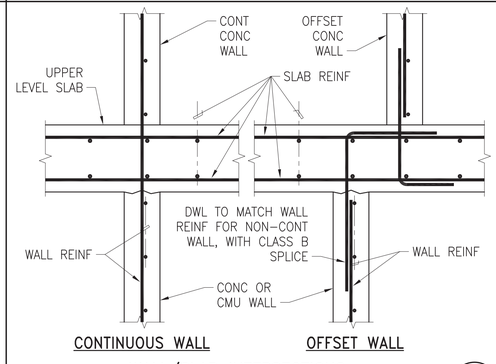

WALL/SLAB INTERSECTIONS
SCALE: 3/4" = 1'-0"

11

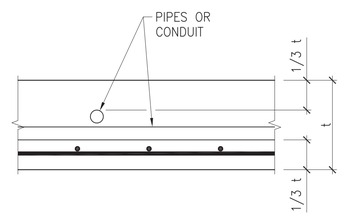

PIPES/CONDUITS IN SUPPORTED SLAB
SCALE: 1" = 1'-0"

12

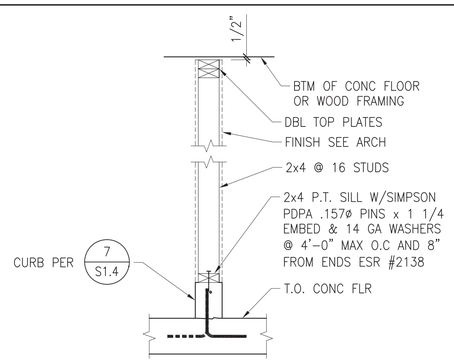

NON-BRG WOOD STUD WALL
SCALE: 1" = 1'-0"

13

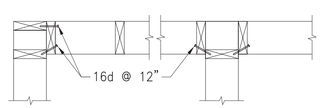

NON-SHEAR WALL

STUD WALL INTERSECTIONS
SCALE: NONE

14

CEILING JOIST SCHEDULE			
SPAN	SIZE	HANGER	LEDGER NAILING
≤ 7'-6"	2x4 @ 16" O.C.	LU24	(2) 16d PER STUD
7'-6" < x ≤ 11'-3"	2x6 @ 16" O.C.	LU26	(2) 16d PER STUD

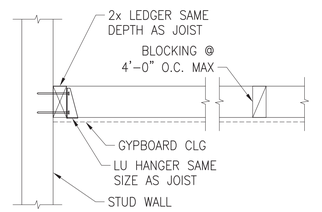

NOTE: CEILING JOIST SCHEDULE IS TYPICAL U.O.N. ON PLANS.

CEILING JOIST
SCALE: NONE

15

S-5

MARTIN & LIBBY
STRUCTURAL ENGINEERS
4452 Glacier Avenue, San Diego, CA 92120
Ph (619) 280-9307 F (619) 284-3533

SPEC. NO. 8147

REGISTERED PROFESSIONAL ENGINEER
JEAN M. LIBBY
Exp. 03-31-13
CIVIL
STATE OF CALIFORNIA

PLANS FOR THE CONSTRUCTION OF
South Mission Beach Lifeguard Station

Typical Details — S1.5

CITY OF SAN DIEGO, CALIFORNIA
ENGINEERING & CAPITAL PROJECTS
ARCHITECTURAL ENGINEERING & CONTRACTS DIVISION
SHEET 52 OF 94 SHEETS

APPROVED: _____ FOR CITY ENGINEER
DATE: 10/13/2014

WBS S-00791

SUBMITTED BY: JIHAD SLEIMAN
PROJECT MANAGER

DESCRIPTION	BY	APPROVED	DATE	FILMED
ORIGINAL	WH/TT			

YOUSIF BENYAMIN
PROJECT ENGINEER

218-1693
CCS27 COORDINATES

1858-6253
CCS83 COORDINATES

CONTRACTOR _____ DATE STARTED _____
INSPECTOR _____ DATE COMPLETED _____

32849-52-D

Proprietary design: These drawings and design are protected by common law copyright. All patentable material contained herein and originating with Dominy + Associates Architects @ domusstudio LLP shall be the property of Dominy + Associates Architects @ domusstudio LLP
© COPYRIGHT October 09, 2014 at 10:22AM

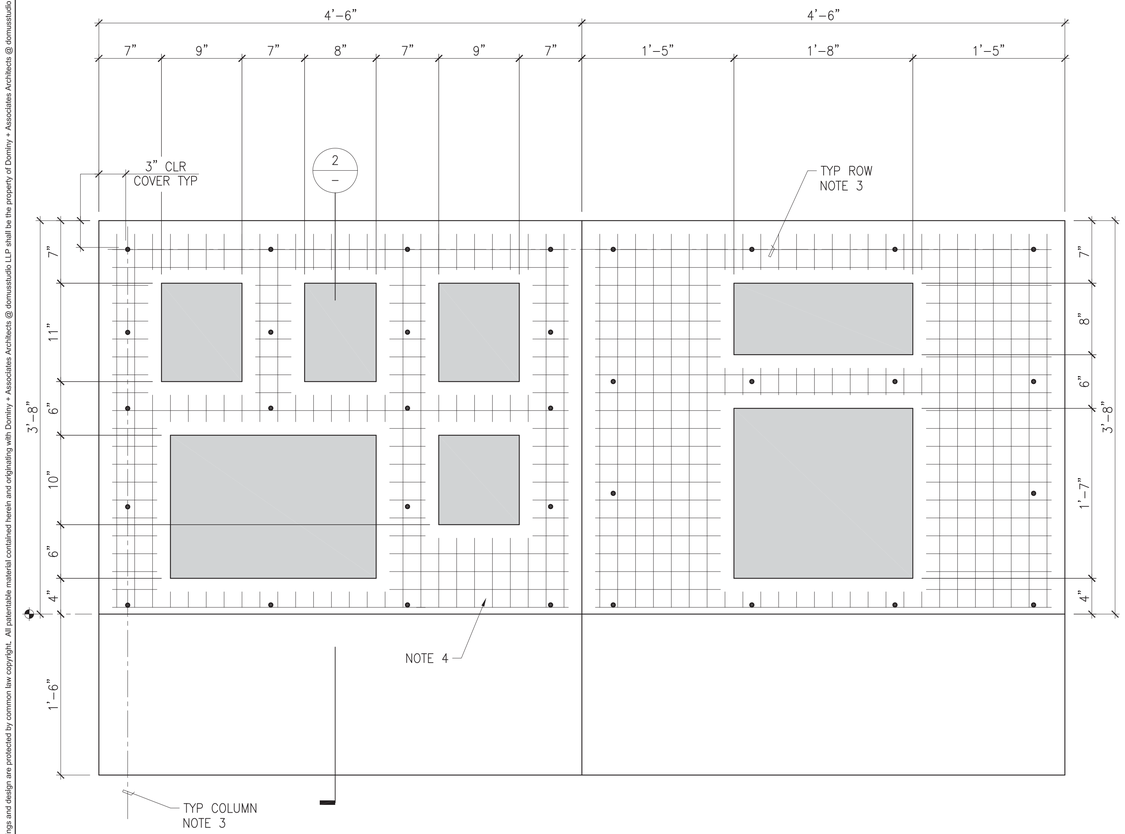

FACADE 1

FACADE 2

NOTES:

1. CITY WALL TO BE CAST FACE DOWN IN 4'–6" LENGTHS. WHEN CONCRETE HAS REACHED 75% f'c MIN, CLEAN AND ROUGHEN BACK, LIFT INTO PLACE AND USE AS FORM FOR CONCRETE SHEET PILE CAP.
2. FACADE ELEVATIONS VARY, SEE ARCHITECTURAL FOR FACADES 1 THRU 5.
3. CENTER HOOK BETWEEN 7" & 8" WIDE ROWS AND COLUMNS W/A MIN CLEAR COVER OF 3".
4. MEDIUM SANDBLAST ALL FINISHED CONCRETE PER ARCHITECT.

CITY WALL ELEVATION

SCALE: 1 1/2" = 1'–0"

1

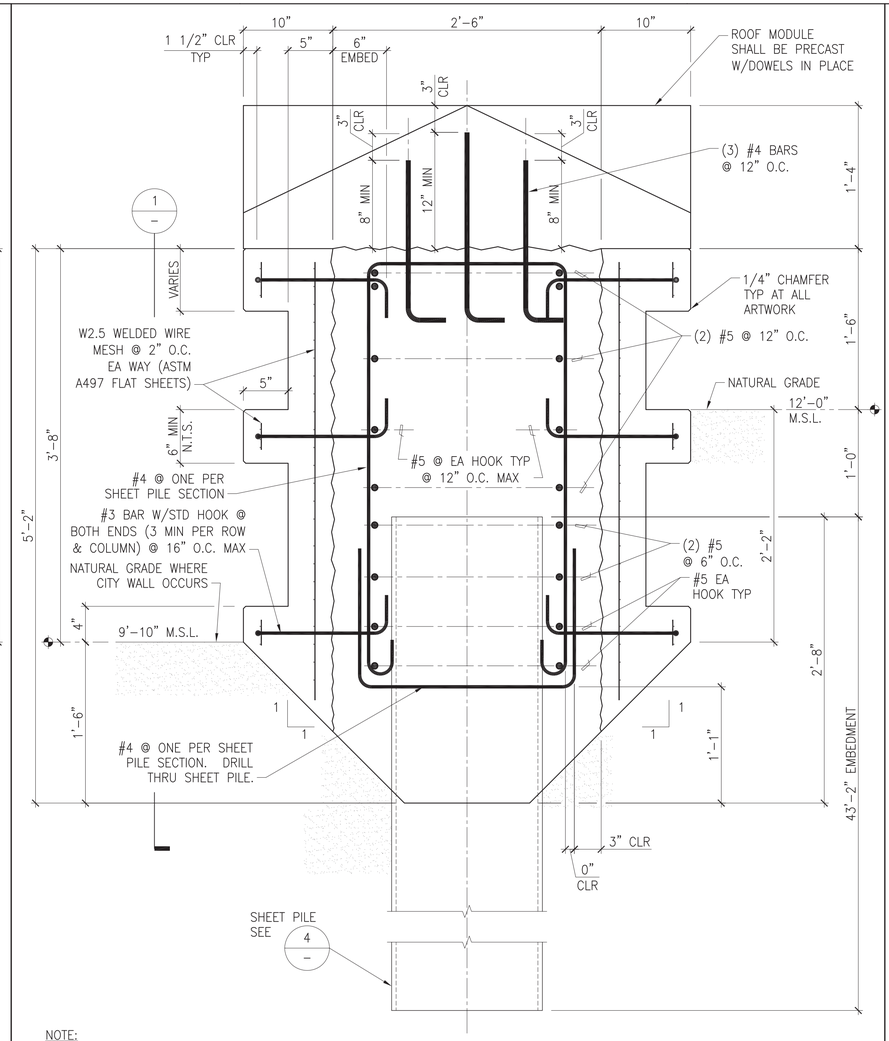

NOTE:

1. TAPER NATURAL GRADE ON OCEAN SIDE BETWEEN CITY WALL AND SEAT WALL.
2. FOR SHEET PILE PLAN SEE A/S1.3.
3. IF REFUSAL IS MET BEFORE REQUIRED EMBEDMENT DEPTH CONSULT RESIDENT ENGINEER, STRUCTURAL ENGINEER AND GEOTECHNICAL ENGINEER, DO NOT CUT OFF SHEET PILE.
4. PRECAST ROOF MODULE SHALL BE LIFTED INTO PLACE WHILE SHEET PILE CAP IS NEWLY PLACED. NOTE THAT POST INSTALLED EPOXY DOWELS WILL NOT BE PERMITTED.

CITY WALL SECTION

SCALE: 1 1/2" = 1'–0"

2

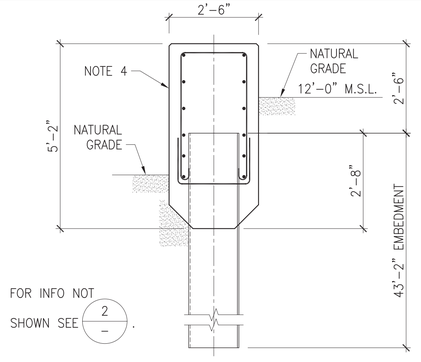

SEAT WALL SECTION

SCALE: 1/2" = 1'–0"

3

SECTION	WIDTH B (IN)	HEIGHT H (IN)	THICKNESS E (IN)	THICKNESS A (IN)
AZ–28–700	27.56	18.15	0.52	0.52

PILE WEIGHT LB/FT	SECTION MODULUS IN^3/FT	MOMENT OF INERTIA IN^4/FT
73.93	51.3	465.9

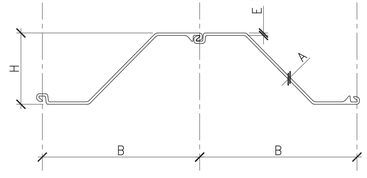

SHEET PILE

SCALE: 1" = 1'–0"

4

S-6

SPEC. NO. 8147

MARTIN & LIBBY
STRUCTURAL ENGINEERS
4452 Glacier Avenue, San Diego, CA 92120
Ph (619) 280-9307 F (619) 284-3533

REGISTERED PROFESSIONAL ENGINEER
JEAN M. LIBBY
Exp. 03-31-15
CIVIL
STATE OF CALIFORNIA

PLANS FOR THE CONSTRUCTION OF

South Mission Beach Lifeguard Station

City Wall Details — S1.6

CITY OF SAN DIEGO, CALIFORNIA
ENGINEERING & CAPITAL PROJECTS
ARCHITECTURAL ENGINEERING & CONTRACTS DIVISION
SHEET 53 OF 94 SHEETS

APPROVED: FOR CITY ENGINEER — DATE 10/13/2014

WBS S-00791

SUBMITTED BY: JIHAD SLEIMAN, PROJECT MANAGER

DESCRIPTION	BY	APPROVED	DATE	FILMED
ORIGINAL	WH/TT			

YOUSIF BENYAMIN
PROJECT ENGINEER
218–1693
CCS27 COORDINATES
1858–6253
CCS83 COORDINATES

CONTRACTOR _____ DATE STARTED _____
INSPECTOR _____ DATE COMPLETED _____

32849–53–D

Proprietary designs: These drawings and design are protected by common law copyright. All patentable material contained herein and originating with Dominy + Associates Architects @ domusstudio LLP shall be the property of Dominy + Associates Architects @ domusstudio LLP
© COPYRIGHT October 09, 2014 at 10:22AM

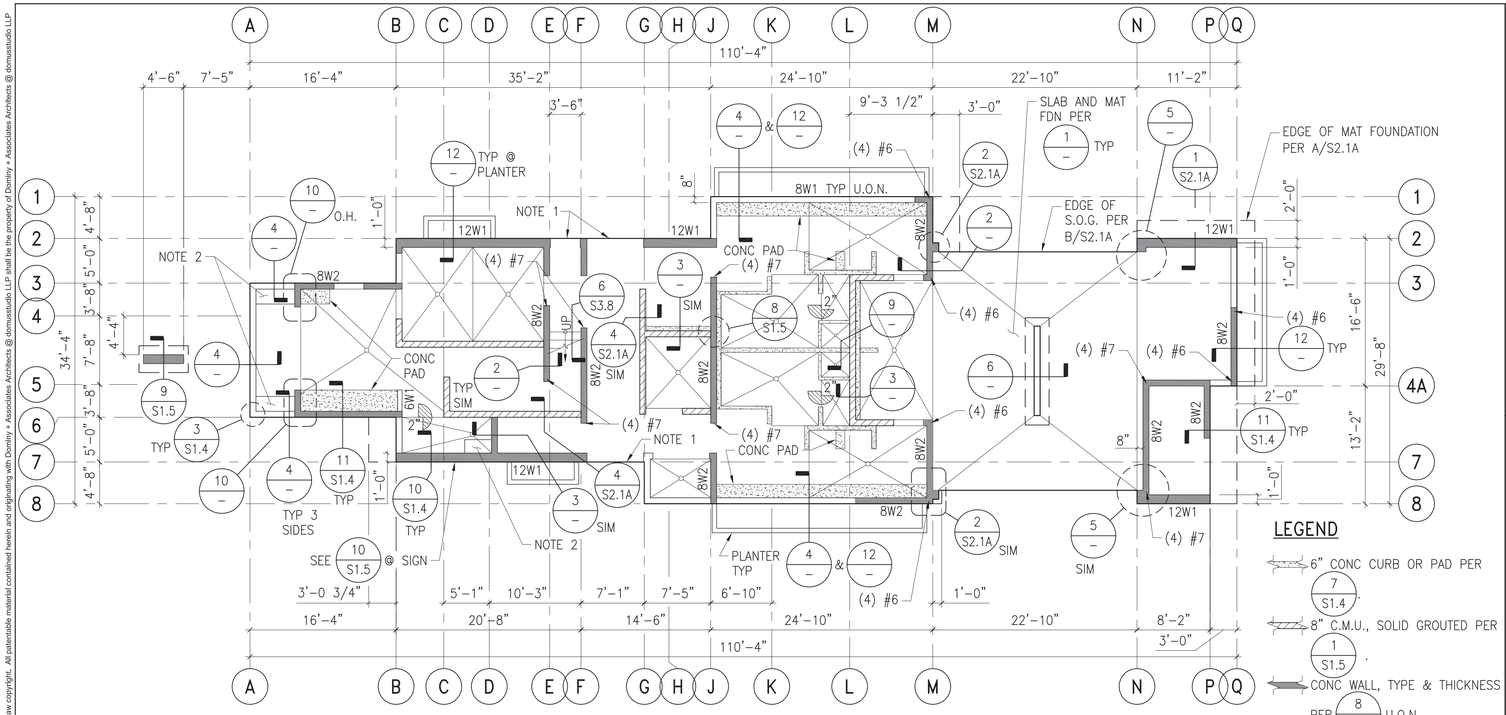

NOTES:
1. COORDINATE DOOR ROUGH OPENING WITH ARCHITECT.
2. CONCRETE BENCH PER ARCHITECT.

FIRST LEVEL FLOOR FRAMING & FOUNDATION PLAN
SCALE: 1/8" = 1'-0"

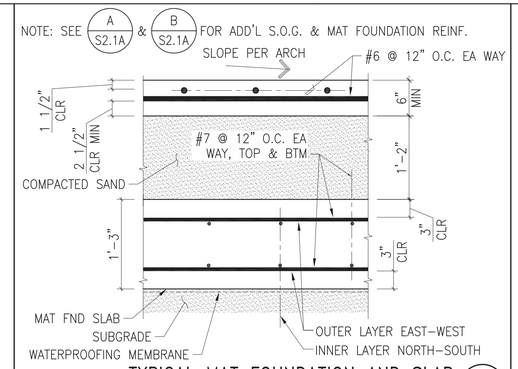

TYPICAL MAT FOUNDATION AND SLAB
SCALE: 1" = 1'-0" — 1

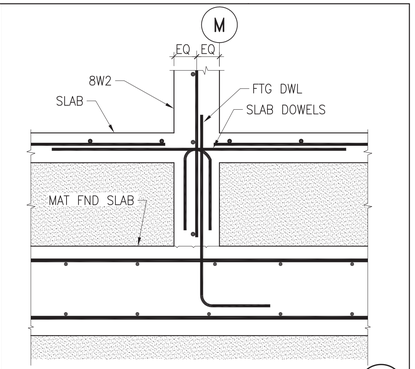

SCALE: 1" = 1'-0" — 2

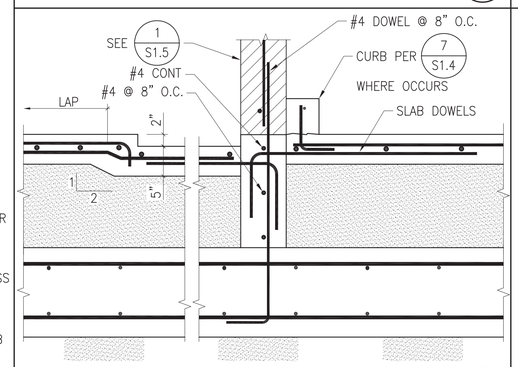

DEPRESSED SLAB
SCALE: 1" = 1'-0" — 3

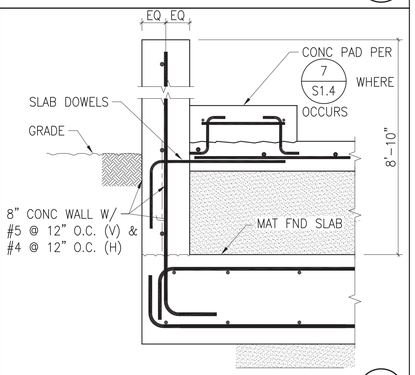

SCALE: 1" = 1'-0" — 4

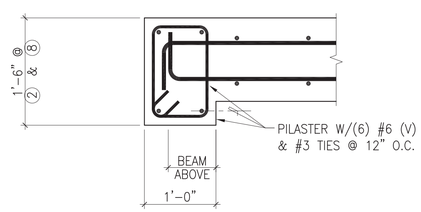

PLAN VIEW
SCALE: 1" = 1'-0" — 5

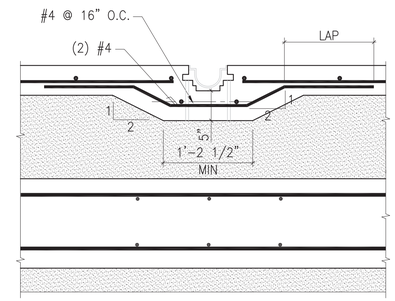

SCALE: 1" = 1'-0" — 6

WALL SCHEDULE			
MARK	THICKNESS (")	WALL REINFORCING	
		VERTICAL	HORIZONTAL
6W1	6	#4 @ 12 @ ℄	#4 @ 12
8W1	8	#5 @ 14 @ ℄	#5 @ 14
8W2	8	#5 @ 12 @ ℄	#5 @ 12
8W3	8	#5 @ 10 @ ℄	#4 @ 10
12W1	12	#5 @ 14 E.F.	#5 @ 14 E.F.

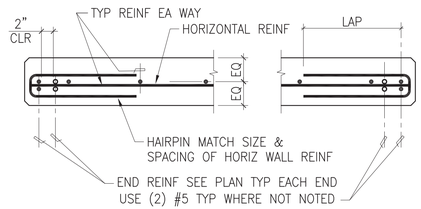

PLAN – SPECIAL WALL REINF SCHEDULE
SCALE: 1" = 1'-0" — 8

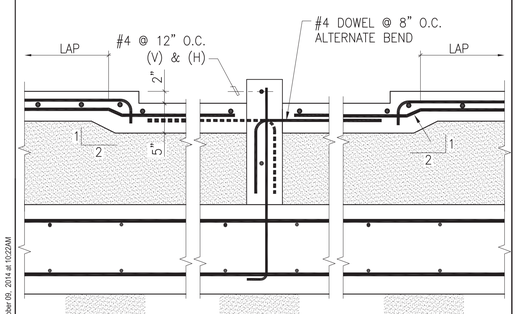

DEPRESSED SLAB AT SHOWERS
SCALE: 1" = 1'-0" — 9

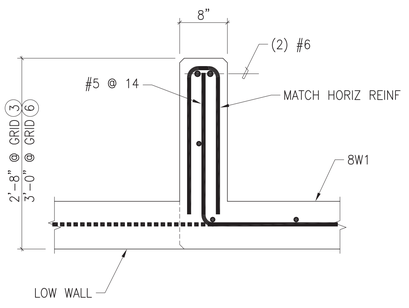

PLAN
SCALE: 1" = 1'-0" — 10

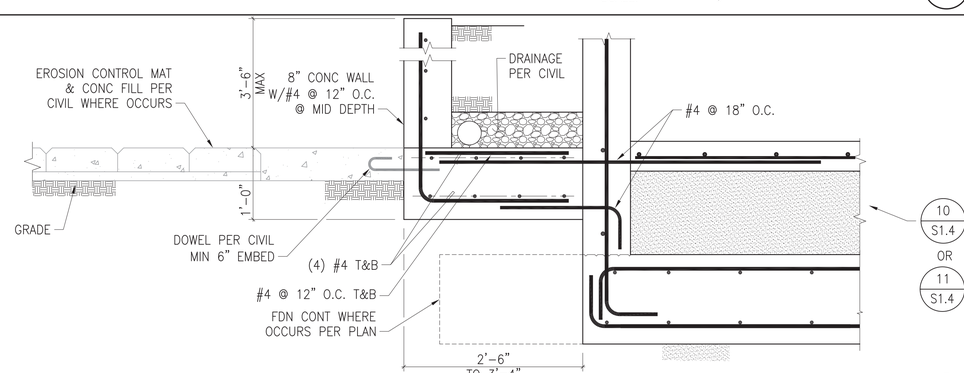

PLANTER WALL
SCALE: 1" = 1'-0" — 12

Proprietary design: These drawings and design are protected by common law copyright. All patentable material contained herein and originating with Dominy + Associates Architects @ domusstudio LLP shall be the property of Dominy + Associates Architects @ domusstudio LLP
© COPYRIGHT October 09, 2014 at 10:22AM

S-7

SPEC. NO. 8147

MARTIN & LIBBY
STRUCTURAL ENGINEERS
4452 Glacier Avenue, San Diego, CA 92120
Ph (619) 280-9307 F (619) 284-3533

REGISTERED PROFESSIONAL ENGINEER — JEAN M. LIBBY — Exp. 03-31-15 — CIVIL — STATE OF CALIFORNIA

PLANS FOR THE CONSTRUCTION OF
South Mission Beach Lifeguard Station

Mat Foundation Plan — S2.1

CITY OF SAN DIEGO, CALIFORNIA
ENGINEERING & CAPITAL PROJECTS
ARCHITECTURAL ENGINEERING & CONTRACTS DIVISION
SHEET 54 OF 94 SHEETS
APPROVED: FOR CITY ENGINEER — DATE 10/13/2014

WBS S-00791
SUBMITTED BY: JIHAD SLEIMAN, PROJECT MANAGER
YOUSIF BENYAMIN, PROJECT ENGINEER
218-1693
CCS27 COORDINATES
1858-6253
CCS83 COORDINATES

DESCRIPTION	BY	APPROVED	DATE	FILMED
ORIGINAL	WH/TT			

CONTRACTOR _____ DATE STARTED _____
INSPECTOR _____ DATE COMPLETED _____

32849-54-D

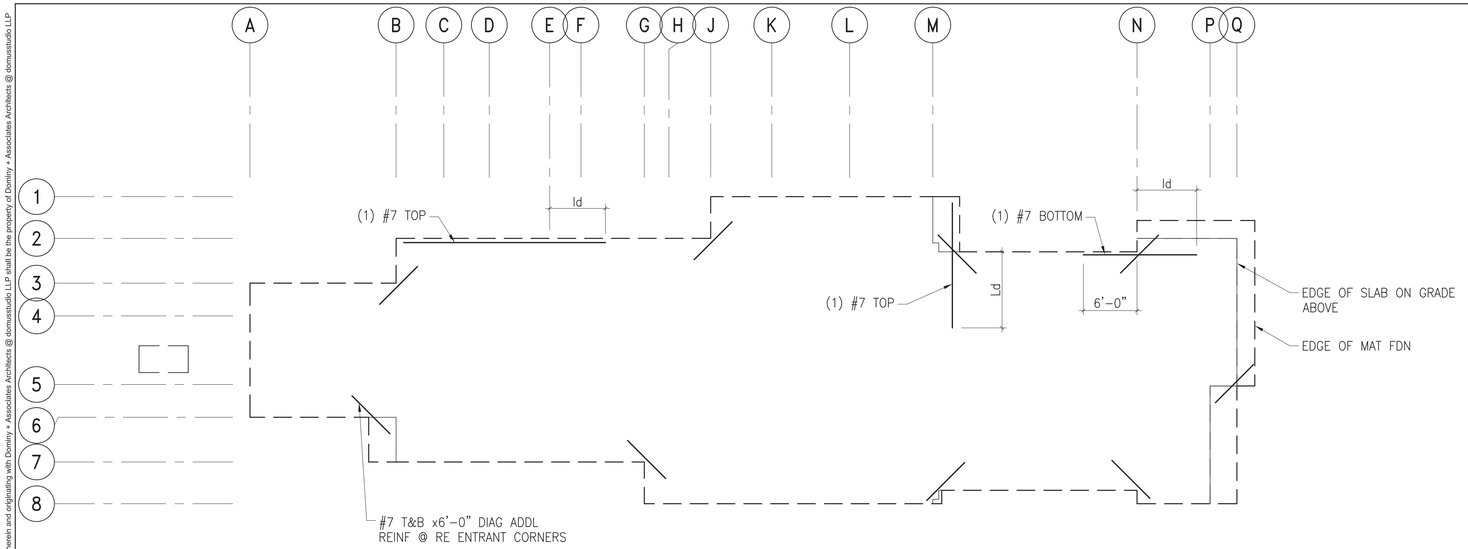

NOTES:

1. REINF SHOWN IN ADDITION TO TYP MAT FOUNDATION REINF PER (1 / S2.1).
2. NO CONSTRUCTION JOINTS ALLOWED IN MAT FOUNDATION.
3. USE STD 180° HOOKS WHERE EMBEDMENT IS NOT POSSIBLE. SEE 2/S21.4.

MAT FOUNDATION ADDITIONAL REINF PLAN

SCALE: 1/8" = 1'-0" — A

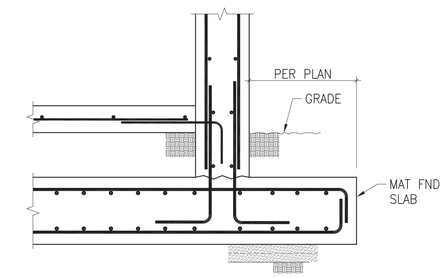

SCALE: 3/4" = 1'-0" — 1

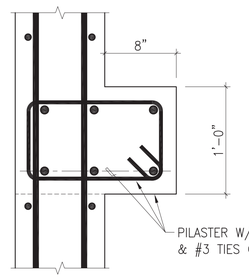

SCALE: 1 1/2" = 1'-0" — 2

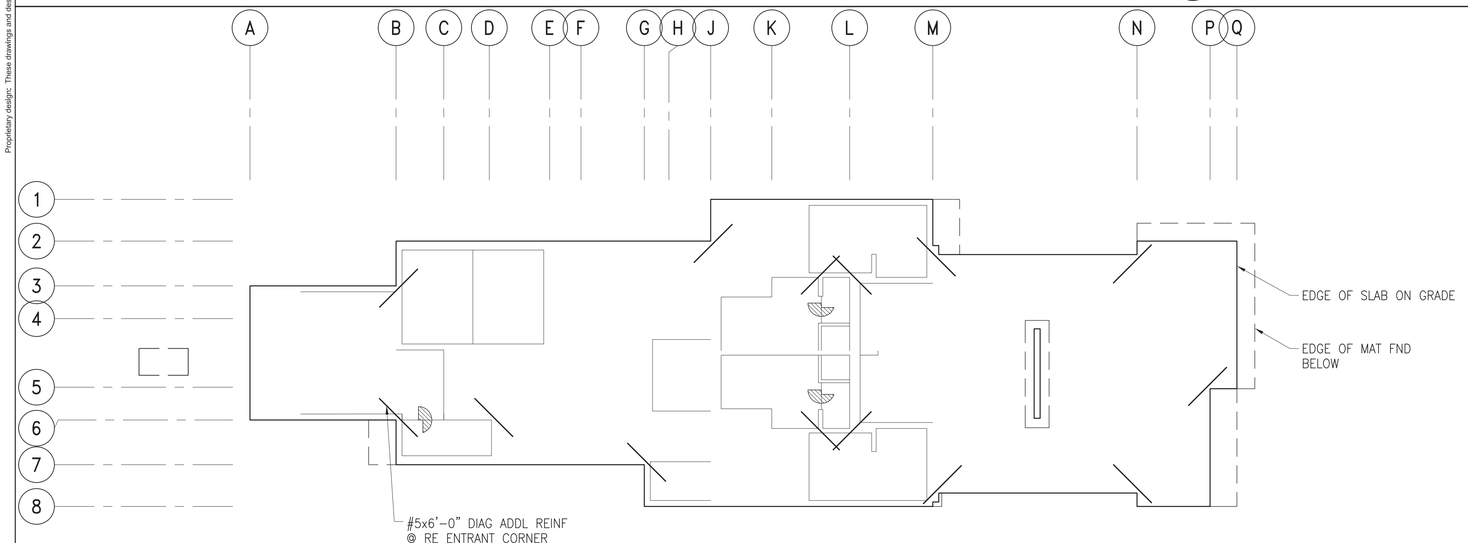

NOTES:

1. TYP S.O.G. REINF PER (1 / S2.1).
2. CONCRETE PADS NOT SHOWN FOR CLARITY.
3. NO CONSTRUCTION JOINTS ON SLAB ON GRADE.
4. USE STD 180° HOOKS WHERE EMBEDMENT IS NOT POSSIBLE. SEE 2/S21.4.

SLAB ON GRADE PLAN

SCALE: 1/8" = 1'-0" — B

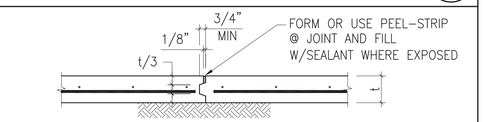

NOTES: 1. ADJACENT POURS MUST BE MADE AT LEAST 8 HOURS APART.
2. INTERRUPT ALL REINF AT JOINT.
3. CONTRACTOR MAY USE EITHER OF THESE DETAILS, U.O.N.

CONSTRUCTION JOINT (C.J.)

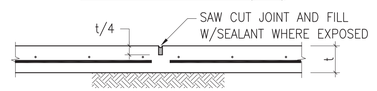

NOTES: 1. INTERRUPT ALL REINF AT JOINT.
2. JOINTS TO BE SAWCUT NOT LATER THAN 12 HOURS AFTER CASTING.
3. CONTRACTOR MAY USE EITHER OF THESE DETAILS, U.O.N.

WEAKENED PLANE JOINT (W.P.J.)

JOINTS IN CONC S.O.G.

SCALE: NONE — 3

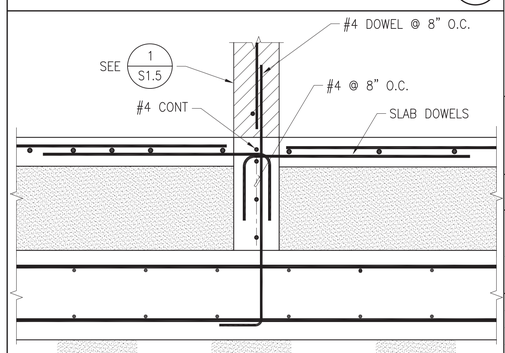

TYP SLAB @ CMU WALL

SCALE: 1" = 1'-0" — 4

S-8

MARTIN & LIBBY
STRUCTURAL ENGINEERS
4452 Glacier Avenue, San Diego, CA 92120
Ph (619) 280-9307 F (619) 284-3533

SPEC. NO. 8147

REGISTERED PROFESSIONAL ENGINEER — JEAN M. LIBBY — Exp. 03-31-13 — CIVIL — STATE OF CALIFORNIA

PLANS FOR THE CONSTRUCTION OF

South Mission Beach Lifeguard Station

Mat Foundation Additional Reinforcing Plan and Details | S2.1A

CITY OF SAN DIEGO, CALIFORNIA
ENGINEERING & CAPITAL PROJECTS
ARCHITECTURAL ENGINEERING & CONTRACTS DIVISION
SHEET 55 OF 94 SHEETS

WBS S-00791

APPROVED: FOR CITY ENGINEER — DATE 10/13/2014

SUBMITTED BY: JIHAD SLEIMAN, PROJECT MANAGER

DESCRIPTION	BY	APPROVED	DATE	FILMED
ORIGINAL	WH/TT			

YOUSIF BENYAMIN, PROJECT ENGINEER
218-1693
CCS27 COORDINATES
1858-6253
CCS83 COORDINATES

CONTRACTOR _____ DATE STARTED _____
INSPECTOR _____ DATE COMPLETED _____

32849-55-D

Proprietary design: These drawings and design are protected by common law copyright. All patentable material contained herein and originating with Dominy + Associates Architects @ domusstudio LLP shall be the property of Dominy + Associates Architects @ domusstudio LLP
© COPYRIGHT October 09, 2014 at 10:23AM

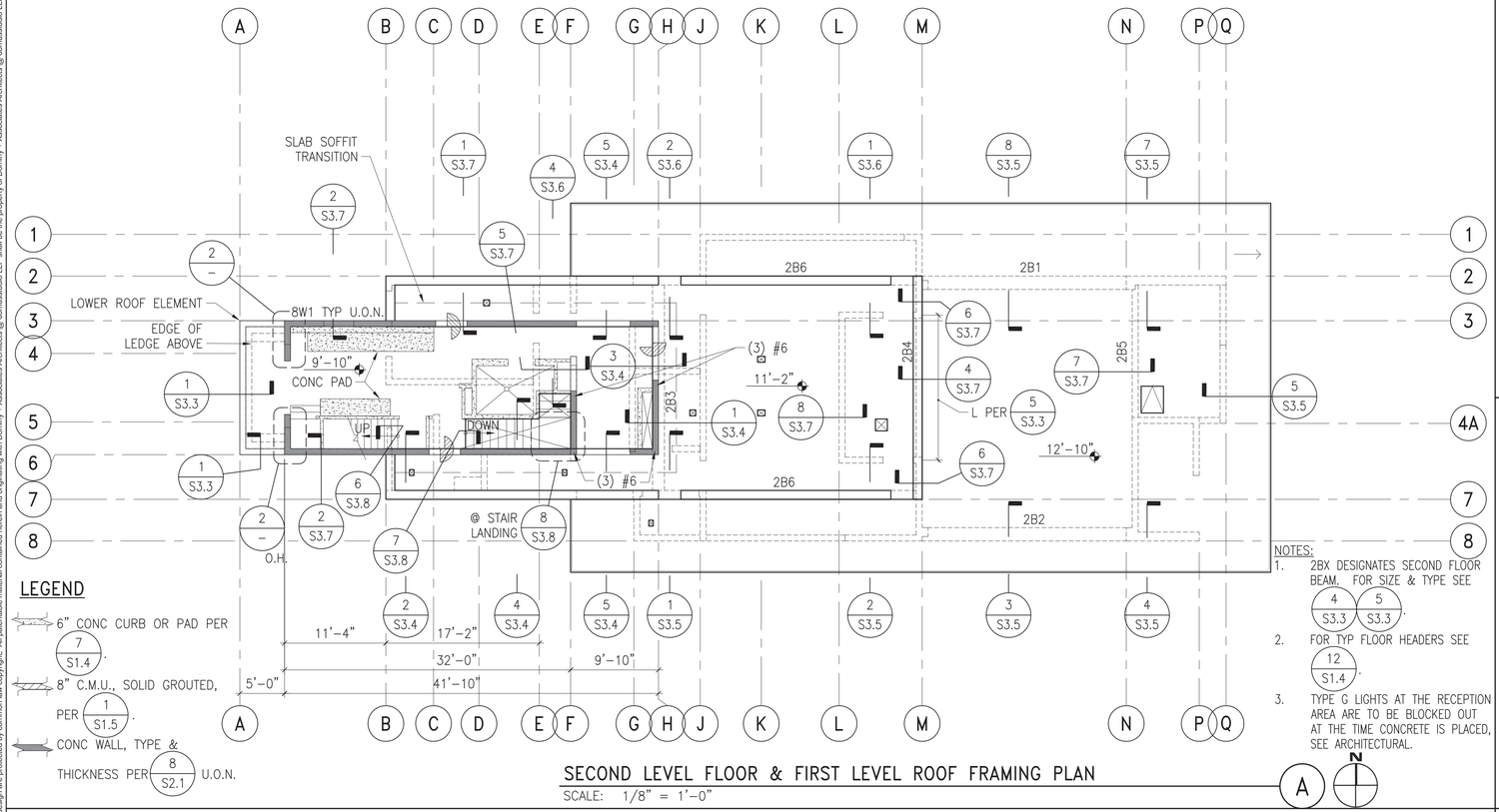

LEGEND

6" CONC CURB OR PAD PER (7/S1.4).

8" C.M.U., SOLID GROUTED, PER (1/S1.5).

CONC WALL, TYPE & THICKNESS PER (8/S2.1) U.O.N.

NOTES:

1. 2BX DESIGNATES SECOND FLOOR BEAM. FOR SIZE & TYPE SEE (4/S3.3) (5/S3.3).
2. FOR TYP FLOOR HEADERS SEE (12/S1.4).
3. TYPE G LIGHTS AT THE RECEPTION AREA ARE TO BE BLOCKED OUT AT THE TIME CONCRETE IS PLACED, SEE ARCHITECTURAL.

SECOND LEVEL FLOOR & FIRST LEVEL ROOF FRAMING PLAN (A)
SCALE: 1/8" = 1'-0"

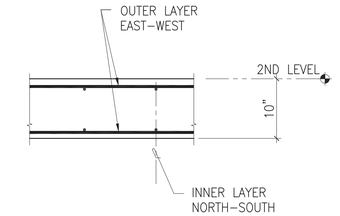

TYPICAL REINF PLACEMENT 2ND LEVEL (1)
SCALE: 1" = 1'-0"

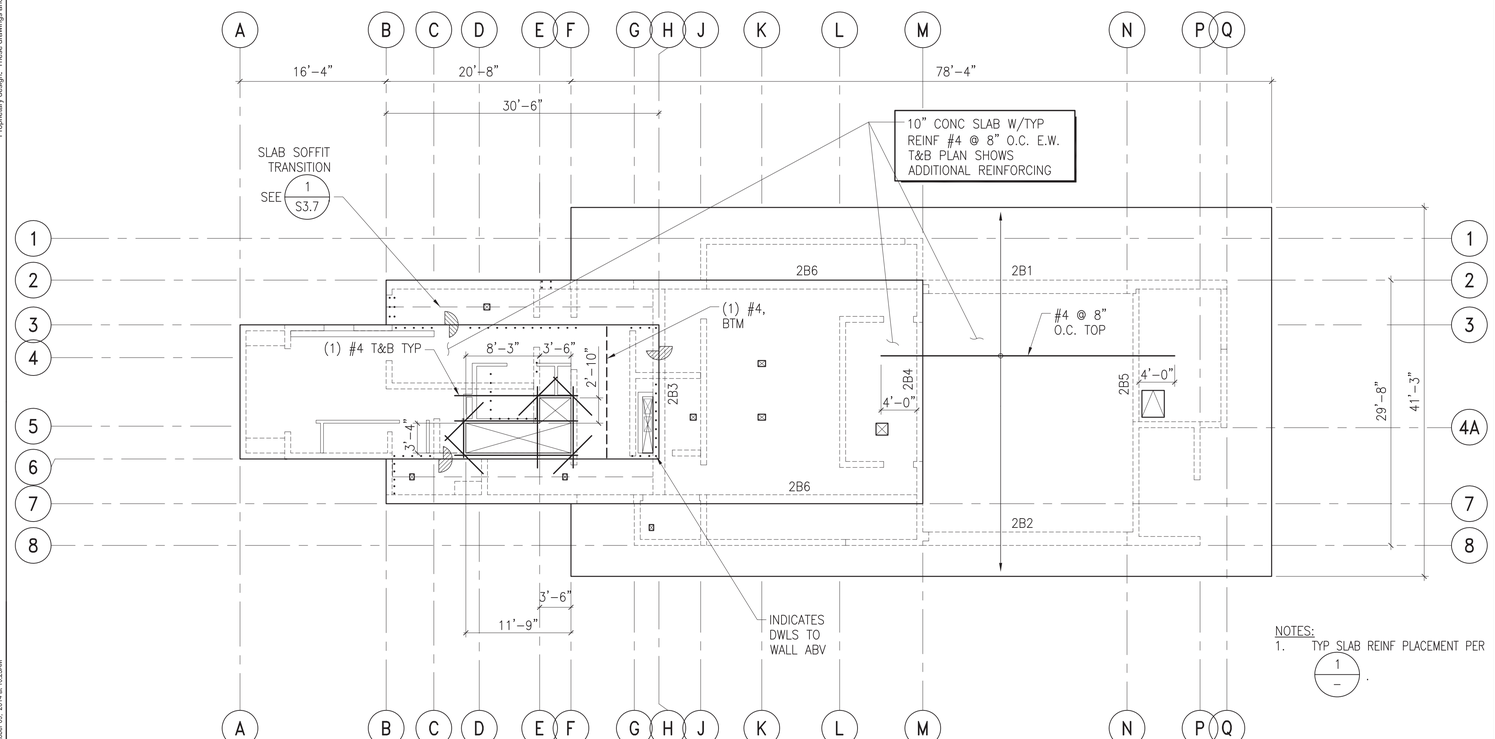

NOTES:

1. TYP SLAB REINF PLACEMENT PER (1/–).

SECOND LEVEL FLOOR & FIRST LEVEL ROOF SLAB PLAN (B)
SCALE: 1/8" = 1'-0"

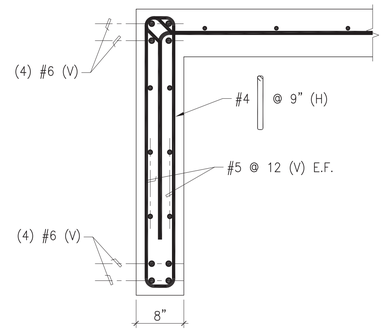

PLAN VIEW (2)
SCALE: 1" = 1'-0"

S-9

MARTIN & LIBBY
STRUCTURAL ENGINEERS
4452 Glacier Avenue, San Diego, CA 92120
Ph (619) 280-9307 F (619) 284-3533

SPEC. NO. 8147

REGISTERED PROFESSIONAL ENGINEER JEAN M. LIBBY Exp. 03-31-15 CIVIL STATE OF CALIFORNIA

PLANS FOR THE CONSTRUCTION OF

South Mission Beach Lifeguard Station

Second Floor Framing Plan & Second Floor Slab Plan | S2.2

CITY OF SAN DIEGO, CALIFORNIA
ENGINEERING & CAPITAL PROJECTS
ARCHITECTURAL ENGINEERING & CONTRACTS DIVISION
SHEET 56 OF 94 SHEETS

APPROVED: FOR CITY ENGINEER — DATE: 10/13/2014

WBS S-00791

SUBMITTED BY: JIHAD SLEIMAN, PROJECT MANAGER

DESCRIPTION	BY	APPROVED	DATE	FILMED
ORIGINAL	WH/TT			

YOUSIF BENYAMIN, PROJECT ENGINEER
218-1693
CCS27 COORDINATES
1858-6253
CCS83 COORDINATES

CONTRACTOR _____ DATE STARTED _____
INSPECTOR _____ DATE COMPLETED _____

32849-56-D

Proprietary design: These drawings and design are protected by common law copyright. All patentable material contained herein and originating with Dominy + Associates Architects @ domusstudio LLP shall be the property of Dominy + Associates Architects @ domusstudio LLP
© COPYRIGHT October 09, 2014 at 10:22AM

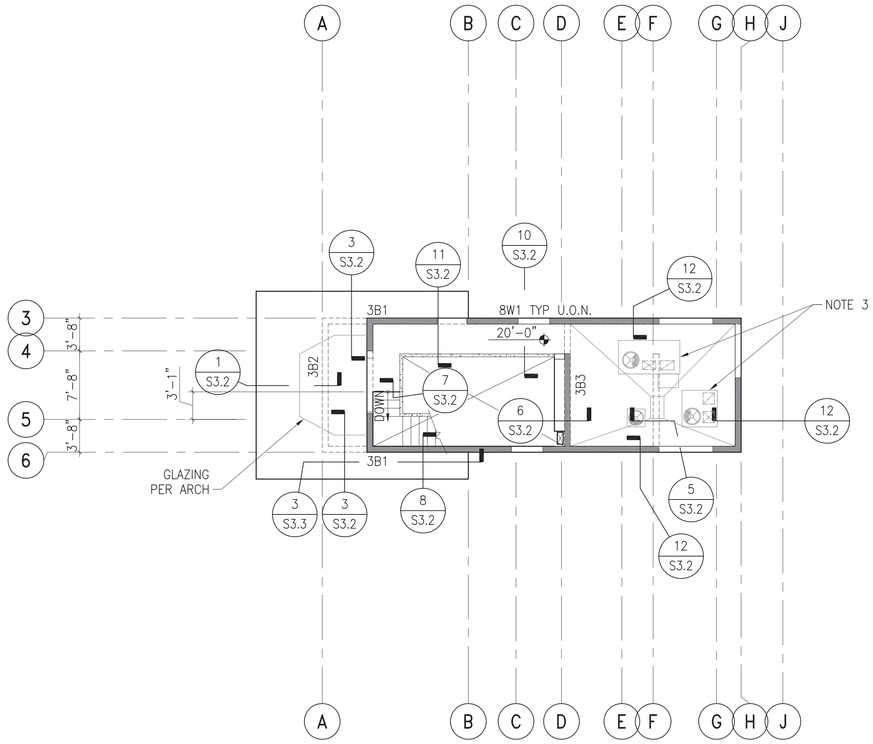

THIRD LEVEL FLOOR & SECOND LEVEL ROOF FRAMING PLAN

SCALE: 1/8" = 1'-0"

A

N

LEGEND

6" CONC CURB PER 7 / S1.4.

CONC WALL, TYPE & THICKNESS PER 8 / S2.1 U.O.N.

NOTES:

1. FOR TYP FLOOR HEADERS SEE 12 / S1.4.
2. TYPE G LIGHTS AT THE OBSERVATION AREA ARE TO BE BLOCKED OUT AT THE TIME CONCRETE IS PLACED, SEE ARCHITECTURAL.
3. UNITS MOUNTED ON ROOF CURBS PER MECHANICAL.

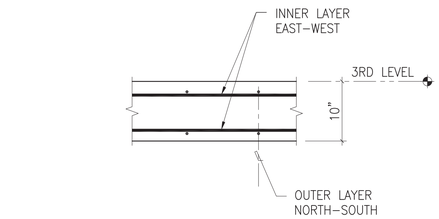

TYPICAL REINF PLACEMENT 3RD LEVEL

SCALE: 1" = 1'-0"

1

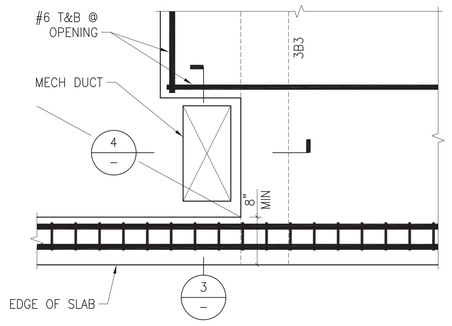

PLAN VIEW AT MECH OPNG

SCALE: 1" = 1'-0"

2

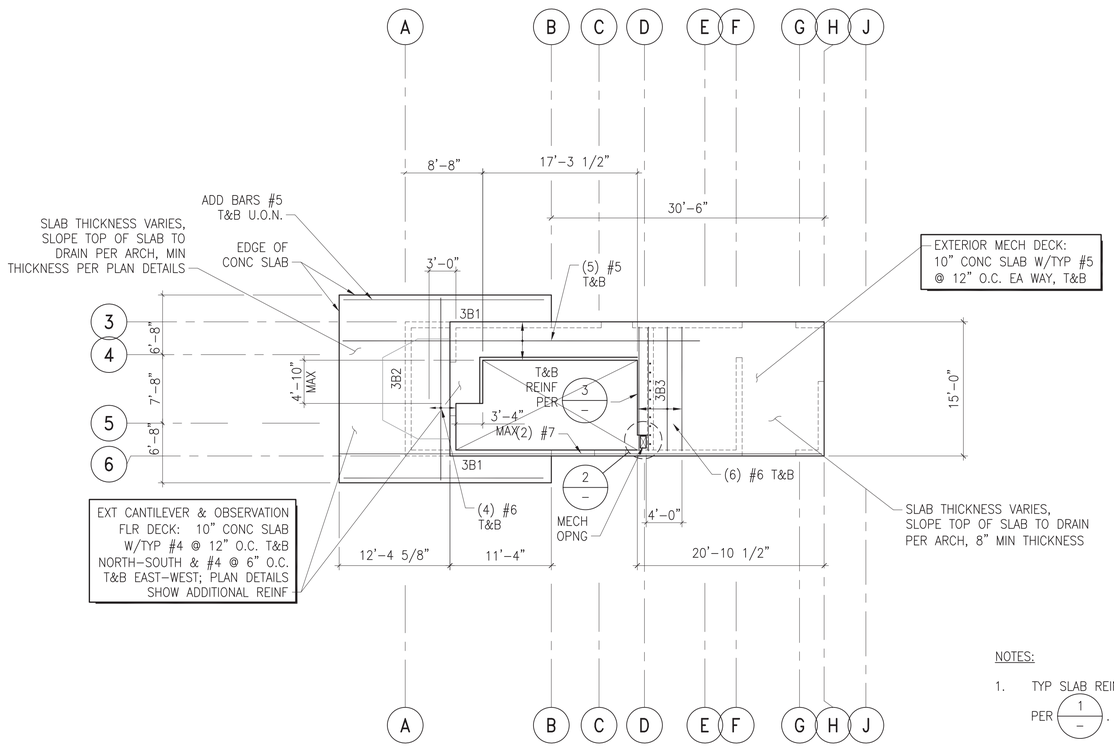

THIRD LEVEL FLOOR & SECOND LEVEL ROOF SLAB PLAN

SCALE: 1/8" = 1'-0"

B

N

NOTES:

1. TYP SLAB REINF PLACEMENT PER 1 / –.

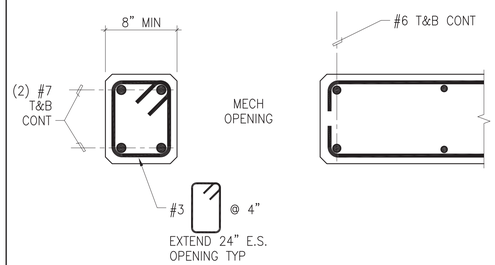

SCALE: 1 1/2" = 1'-0"

3

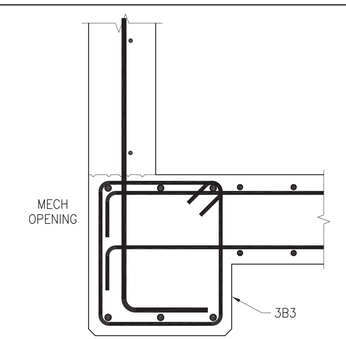

SCALE: 1 1/2" = 1'-0"

4

S-10

MARTIN & LIBBY
STRUCTURAL ENGINEERS
4452 Glacier Avenue, San Diego, CA 92120
Ph (619) 280-9307 F (619) 284-3533

SPEC. NO. 8147

REGISTERED PROFESSIONAL ENGINEER
JEAN M. LIBBY
Exp. 03-31-14
CIVIL
STATE OF CALIFORNIA

PLANS FOR THE CONSTRUCTION OF

South Mission Beach Lifeguard Station

Third Floor Framing Plan & Third Floor Slab Plan | S2.3

CITY OF SAN DIEGO, CALIFORNIA
ENGINEERING & CAPITAL PROJECTS
ARCHITECTURAL ENGINEERING & CONTRACTS DIVISION
SHEET 57 OF 94 SHEETS

APPROVED: _____ FOR CITY ENGINEER

10/13/2014 DATE

WBS S-00791

SUBMITTED BY: JIHAD SLEIMAN PROJECT MANAGER

DESCRIPTION	BY	APPROVED	DATE	FILMED
ORIGINAL	WH/TT			

YOUSIF BENYAMIN PROJECT ENGINEER

218-1693 CCS27 COORDINATES

1858-6253 CCS83 COORDINATES

CONTRACTOR _____ DATE STARTED _____

INSPECTOR _____ DATE COMPLETED _____

32849-57-D

Proprietary design: These drawings and design are protected by common law copyright. All patentable material contained herein and originating with Dominy + Associates Architects @ domusstudio LLP shall be the property of Dominy + Associates Architects @ domusstudio LLP

© COPYRIGHT October 09, 2014 at 10:23AM

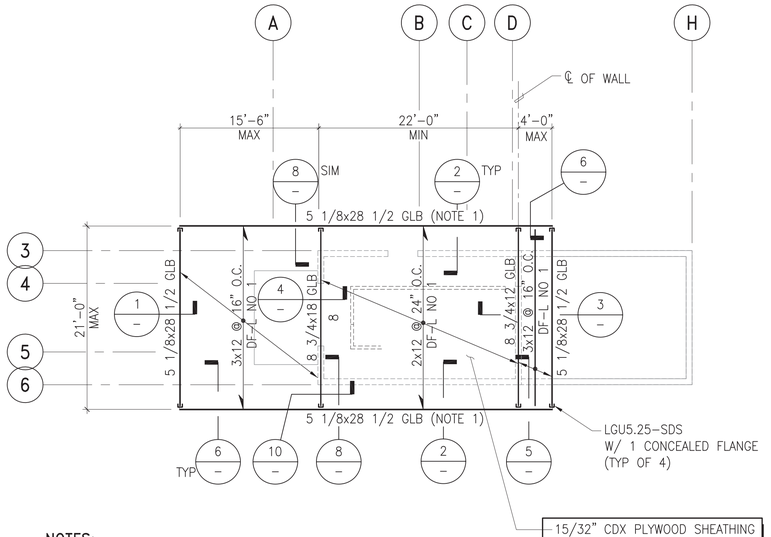

NOTES:

1. 1" CAMBER REQUIRED AT 15'-6" CANTILEVER. SPAN ONLY. NO CAMBER REQUIRED AT ALL OTHER SPANS.

OBSERVATION ROOF FRAMING PLAN — SCALE: 1/8" = 1'-0" — A

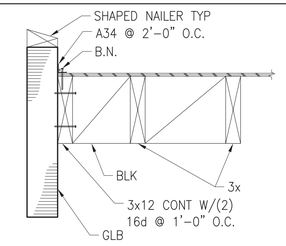

DETAIL — SCALE: 1" = 1'-0" — 1

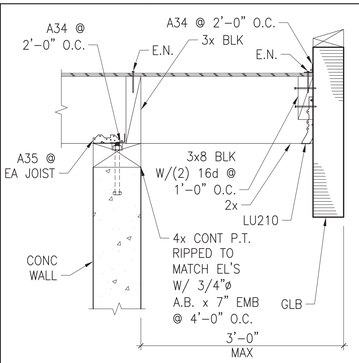

DETAIL — SCALE: 1" = 1'-0" — 2

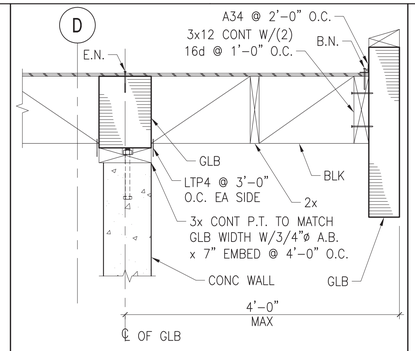

DETAIL — SCALE: 1" = 1'-0" — 3

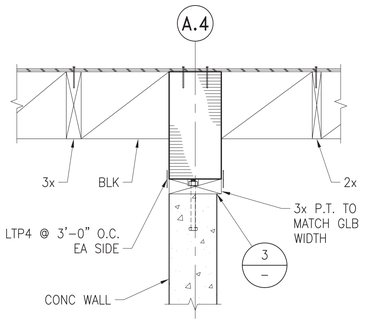

DETAIL — SCALE: 1" = 1'-0" — 4

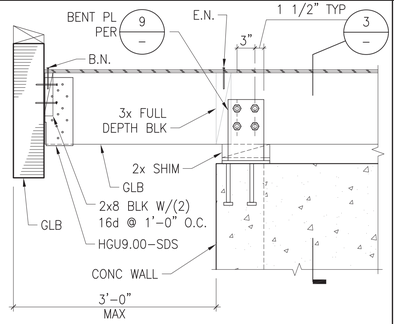

DETAIL — SCALE: 1" = 1'-0" — 5

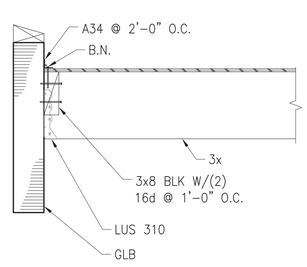

DETAIL — SCALE: 1" = 1'-0" — 6

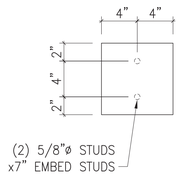

A

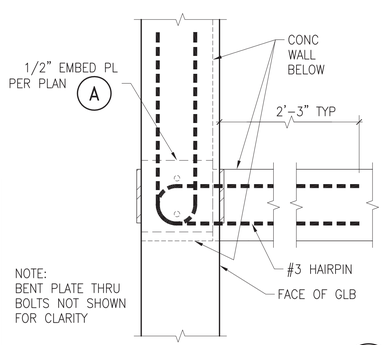

SCALE: 1 1/2" = 1'-0" — 7

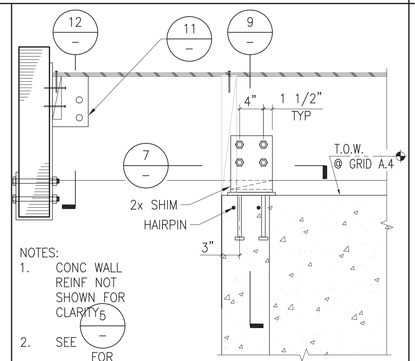

NOTES:
1. CONC WALL REINF NOT SHOWN FOR CLARITY
2. SEE 5 FOR MORE INFO.

DETAIL — SCALE: 1" = 1'-0" — 8

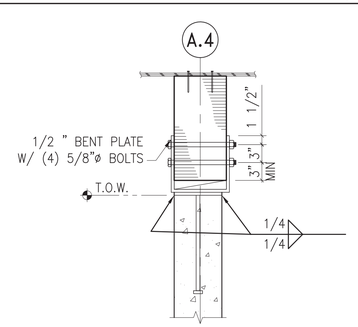

DETAIL — SCALE: 1" = 1'-0" — 9

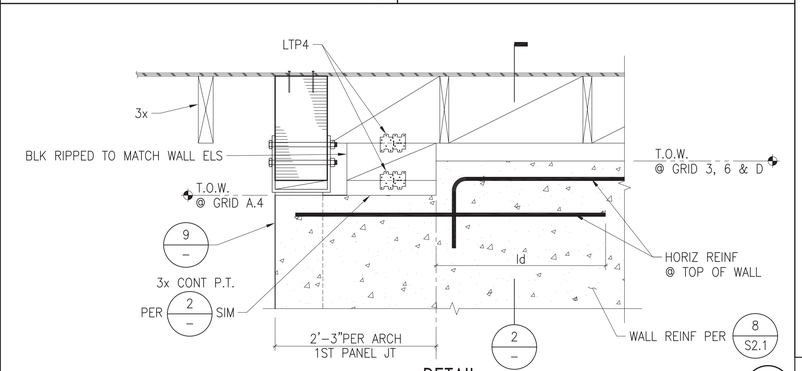

DETAIL — SCALE: 1" = 1'-0" — 10

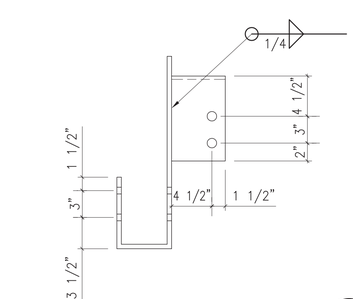

SCALE: 1 1/2" = 1'-0" — 11

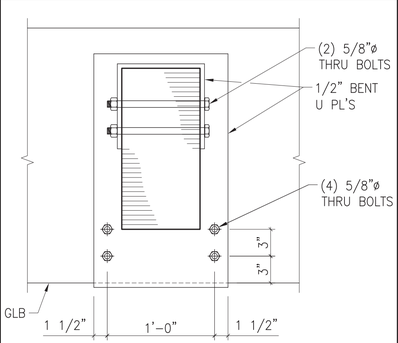

SCALE: 1 1/2" = 1'-0" — 12

S-11

SPEC. NO. 8147

MARTIN & LIBBY
STRUCTURAL ENGINEERS
4452 Glacier Avenue, San Diego, CA 92120
Ph (619) 280-9307 F (619) 284-3533

REGISTERED PROFESSIONAL ENGINEER — JEAN M. LIBBY — Exp. 03-31-14 — CIVIL — STATE OF CALIFORNIA

PLANS FOR THE CONSTRUCTION OF

South Mission Beach Lifeguard Station

Observation Roof Framing Plan and Details | S2.4

CITY OF SAN DIEGO, CALIFORNIA
ENGINEERING & CAPITAL PROJECTS
ARCHITECTURAL ENGINEERING & CONTRACTS DIVISION
SHEET 58 OF 94 SHEETS

APPROVED: FOR CITY ENGINEER — DATE: 10/13/2014

WBS S-00791

SUBMITTED BY: JIHAD SLEIMAN, PROJECT MANAGER

DESCRIPTION	BY	APPROVED	DATE	FILMED
ORIGINAL	WH/TT			

YOUSIF BENYAMIN, PROJECT ENGINEER

218-1693

CCS27 COORDINATES

1858-6253

CCS83 COORDINATES

CONTRACTOR _____ DATE STARTED _____
INSPECTOR _____ DATE COMPLETED _____

32849-58-D

Proprietary design: These drawings and design are protected by common law copyright. All patentable material contained herein and originating with Dominy + Associates Architects @ domusstudio LLP shall be the property of Dominy + Associates Architects @ domusstudio LLP
© COPYRIGHT October 09, 2014 at 10:24AM

Proprietary designs: These drawings and design are protected by common law copyright. All patentable material contained herein and originating with Dominy + Associates Architects @ domusstudio LLP shall be the property of Dominy + Associates Architects @ domusstudio LLP

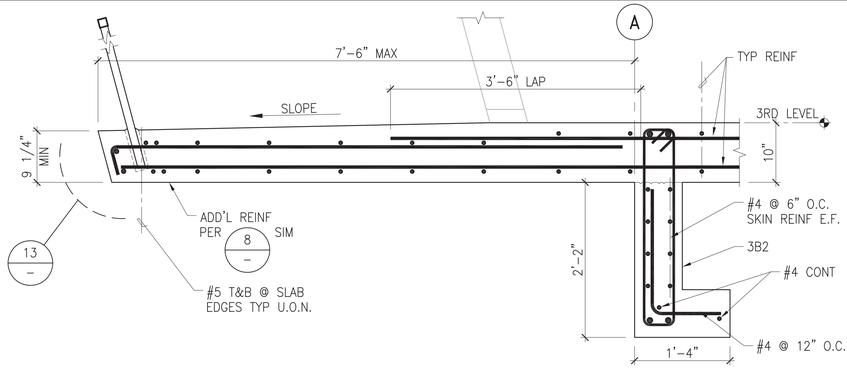

SCALE: 1" = 1'-0" — 1

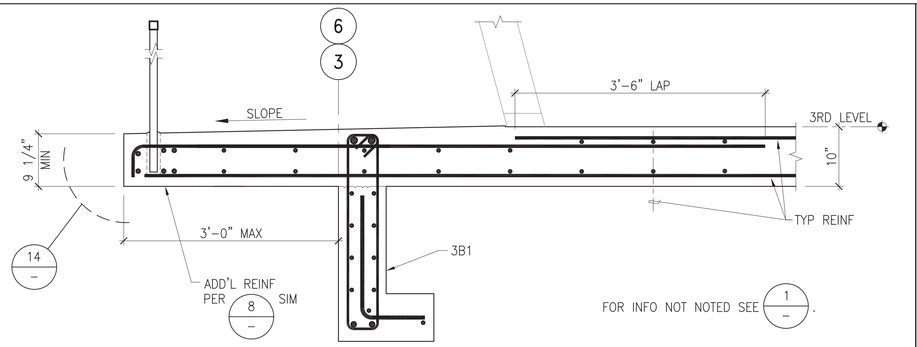

SCALE: 1" = 1'-0" — 3

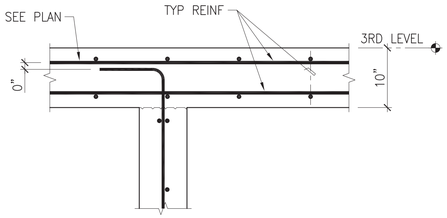

SCALE: 1" = 1'-0" — 5

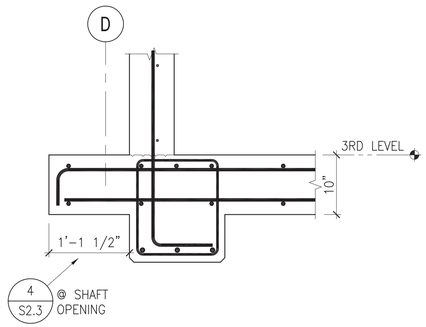

SCALE: 1" = 1'-0" — 6

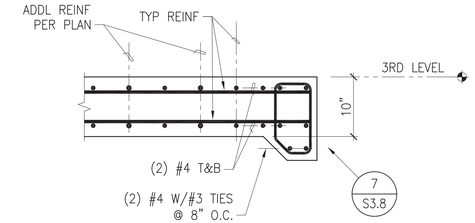

SLAB EDGE @ STAIR LANDING
SCALE: 1" = 1'-0" — 7

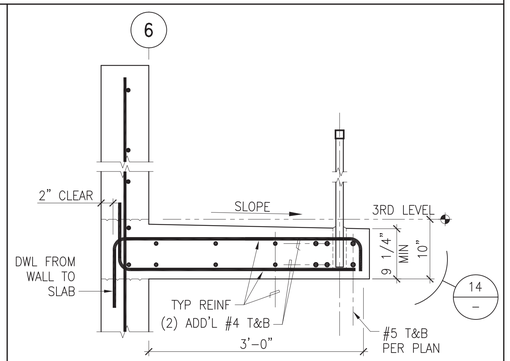

SCALE: 1" = 1'-0" — 8

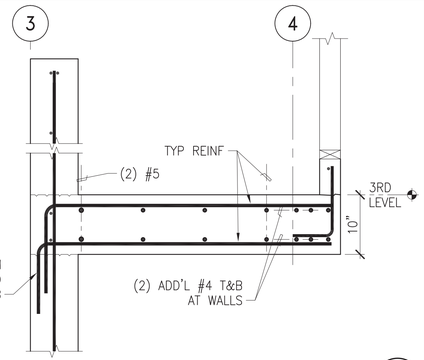

SCALE: 1" = 1'-0" — 10

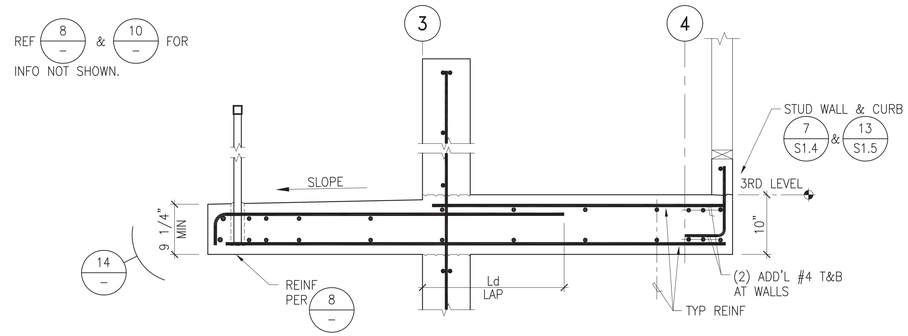

SCALE: 1" = 1'-0" — 11

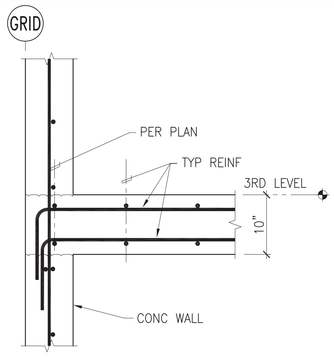

SCALE: 1" = 1'-0" — 12

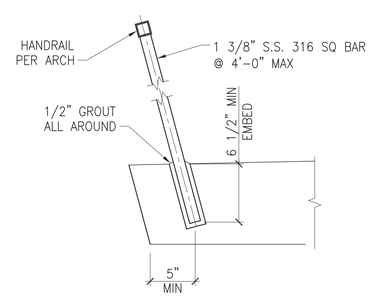

SCALE: 1 1/2" = 1'-0" — 13

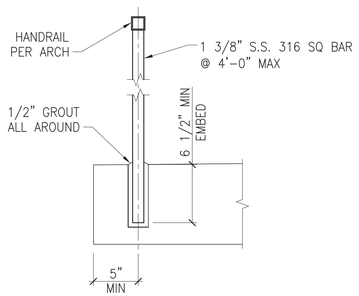

SCALE: 1 1/2" = 1'-0" — 14

S-12

MARTIN & LIBBY
STRUCTURAL ENGINEERS
4452 Glacier Avenue, San Diego, CA 92120
Ph (619) 280-9307 F (619) 284-3533

SPEC. NO. 8147

REGISTERED PROFESSIONAL ENGINEER — JEAN M. LIBBY — Exp. 03-31-13 — CIVIL — STATE OF CALIFORNIA

PLANS FOR THE CONSTRUCTION OF

South Mission Beach Lifeguard Station

Third Floor Details — S3.2

CITY OF SAN DIEGO, CALIFORNIA
ENGINEERING & CAPITAL PROJECTS
ARCHITECTURAL ENGINEERING & CONTRACTS DIVISION
SHEET 59 OF 94 SHEETS

WBS S-00791

APPROVED: FOR CITY ENGINEER — DATE 10/13/2014

SUBMITTED BY: JIHAD SLEIMAN — PROJECT MANAGER

DESCRIPTION	BY	APPROVED	DATE	FILMED
ORIGINAL	WH/TT			

YOUSIF BENYAMIN — PROJECT ENGINEER
218-1693
CCS27 COORDINATES
1858-6253
CCS83 COORDINATES

CONTRACTOR _____ DATE STARTED _____
INSPECTOR _____ DATE COMPLETED _____

32849-59-D

© COPYRIGHT October 09, 2014 at 10:24AM

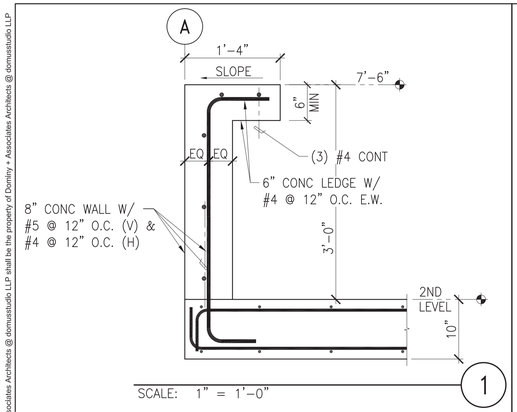

SCALE: 1" = 1'-0" — 1

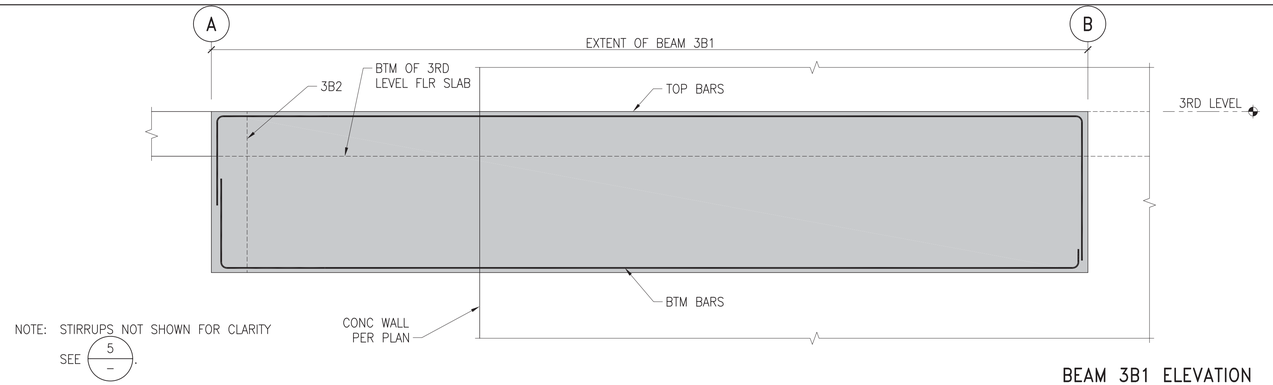

BEAM 3B1 ELEVATION
SCALE: 3/4" = 1'-0" — 3

BEAM MARK	WIDTH	DEPTH	TOP REINF	BTM REINF	STIRRUPS
2B1	1'-6"	2'-10"	(3) #5	(4) #6	#3
2B2	1'-6"	2'-10"	(3) #5	(4) #6	#3
2B3	1'-4"	1'-6"	(3) #5	(3) #5	#3
2B4	8"	2'-6"	(2) #6	(2) #6	#3
2B5	8"	1'-6"	(2) #6	(2) #6	#3
2B6	1'-0"	2'-6"	(2) #6	(2) #6	#3
3B1	8"	3'-0"	(2) #8	(2) #6	#3
3B2	8"	3'-0"	(2) #6	(2) #6	#3
3B3	1'-4"	1'-6"	(2) #5	(2) #6	#3

SECOND & THIRD FLOOR
– GRAVITY BEAM SCHEDULE
SCALE: NONE — 4

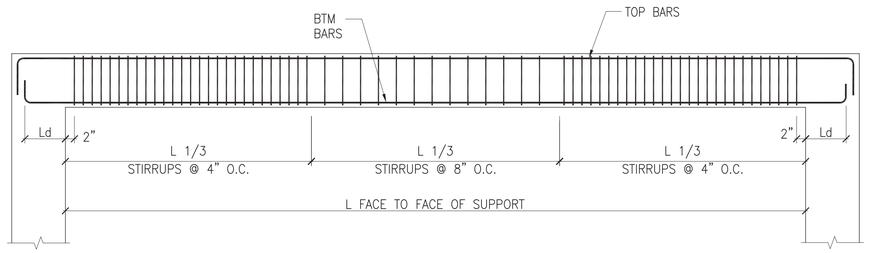

GRAVITY BEAM REINFORCEMENT
SCALE: NONE — 5

S-13

MARTIN & LIBBY
STRUCTURAL ENGINEERS
4452 Glacier Avenue, San Diego, CA 92120
Ph (619) 280-9307 F (619) 284-3533

SPEC. NO. 8147

REGISTERED PROFESSIONAL ENGINEER
JEAN M. LIBBY
Exp. 03-31-15
CIVIL
STATE OF CALIFORNIA

PLANS FOR THE CONSTRUCTION OF
South Mission Beach Lifeguard Station

Second & Third Floor Details — S3.3

CITY OF SAN DIEGO, CALIFORNIA
ENGINEERING & CAPITAL PROJECTS
ARCHITECTURAL ENGINEERING & CONTRACTS DIVISION
SHEET 60 OF 94 SHEETS

WBS S-00791

APPROVED: _____ 10/13/2014
FOR CITY ENGINEER — DATE

SUBMITTED BY:
JIHAD SLEIMAN
PROJECT MANAGER

DESCRIPTION	BY	APPROVED	DATE	FILMED
ORIGINAL	WH/TT			

YOUSIF BENYAMIN
PROJECT ENGINEER
218-1693
CCS27 COORDINATES
1858-6253
CCS83 COORDINATES

CONTRACTOR _____ DATE STARTED _____
INSPECTOR _____ DATE COMPLETED _____

32849-60-D

Proprietary design: These drawings and design are protected by common law copyright. All patentable material contained herein and originating with Dominy + Associates Architects @ domusstudio LLP shall be the property of Dominy + Associates Architects @ domusstudio LLP
© COPYRIGHT October 09, 2014 at 10:24AM

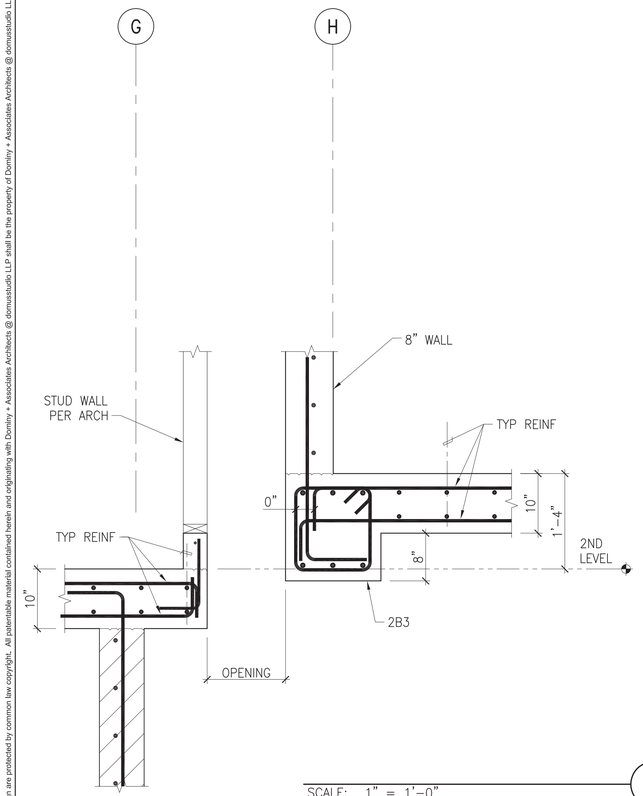

SCALE: 1" = 1'-0" 1

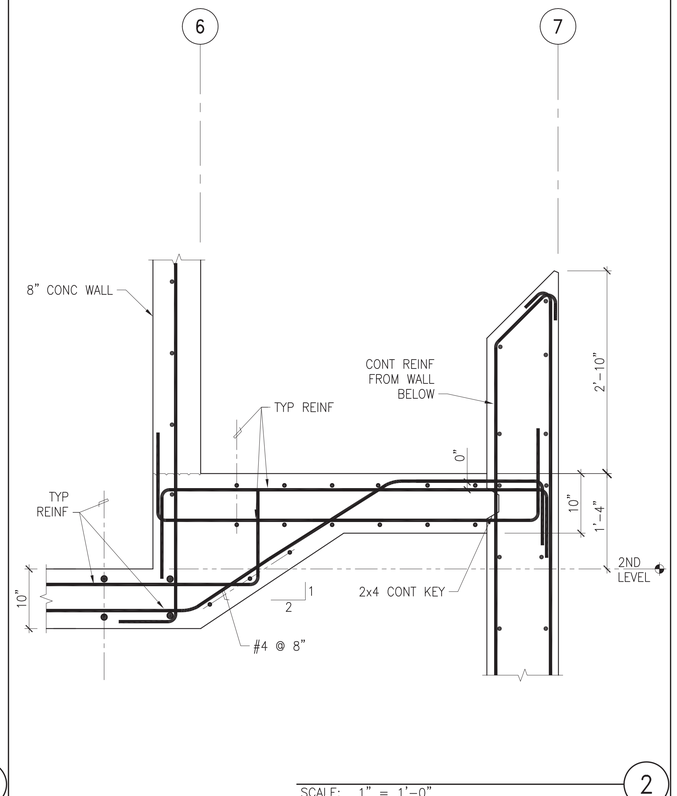

SCALE: 1" = 1'-0" 2

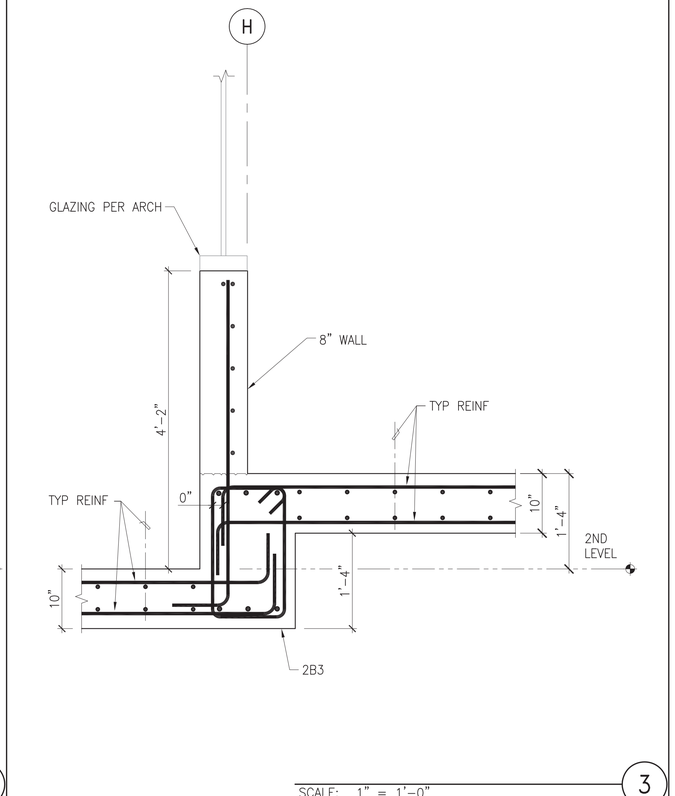

SCALE: 1" = 1'-0" 3

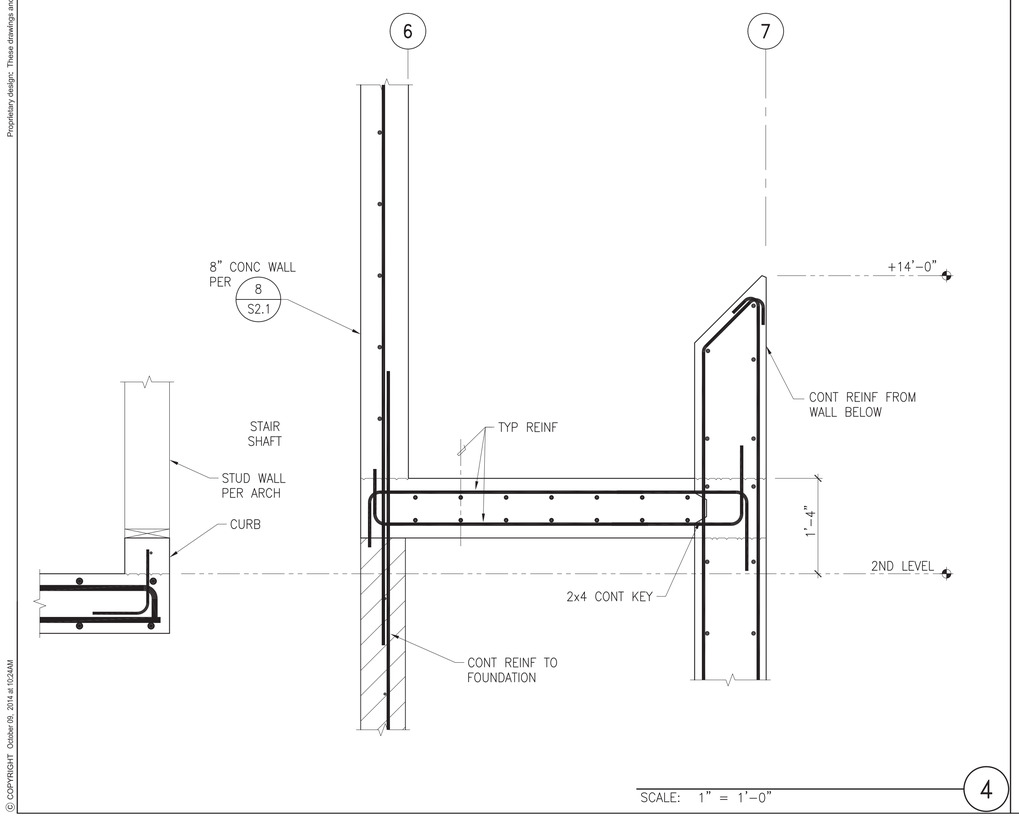

SCALE: 1" = 1'-0" 4

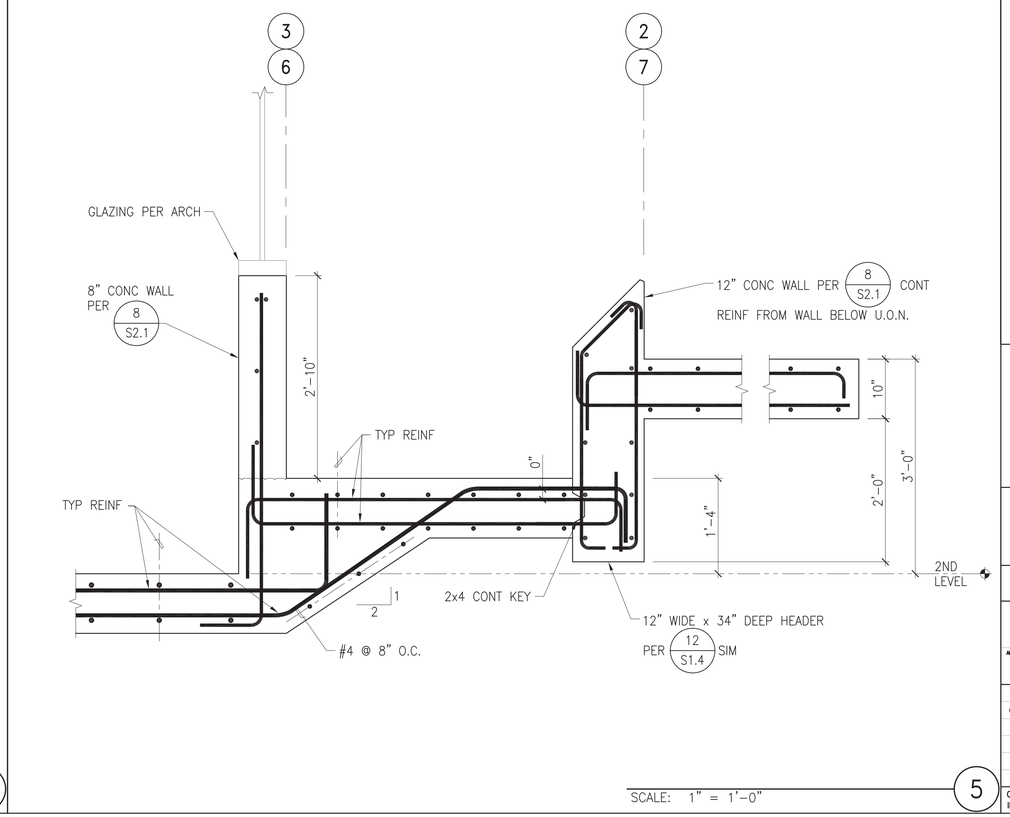

SCALE: 1" = 1'-0" 5

S-14

MARTIN & LIBBY
STRUCTURAL ENGINEERS
4452 Glacier Avenue, San Diego, CA 92120
Ph (619) 280-9307 F (619) 284-3533

SPEC. NO. 8147

REGISTERED PROFESSIONAL ENGINEER JEAN M. LIBBY Exp. 03-31-15 CIVIL STATE OF CALIFORNIA

PLANS FOR THE CONSTRUCTION OF
South Mission Beach Lifeguard Station

Second Floor Details — S3.4

CITY OF SAN DIEGO, CALIFORNIA
ENGINEERING & CAPITAL PROJECTS
ARCHITECTURAL ENGINEERING & CONTRACTS DIVISION
SHEET 61 OF 94 SHEETS

APPROVED: _____ 10/13/2014
FOR CITY ENGINEER — DATE

WBS S-00791

SUBMITTED BY: JIHAD SLEIMAN
PROJECT MANAGER

DESCRIPTION	BY	APPROVED	DATE	FILMED
ORIGINAL	WH/TT			

YOUSIF BENYAMIN
PROJECT ENGINEER

218-1693
CCS27 COORDINATES

1858-6253
CCS83 COORDINATES

CONTRACTOR _____ DATE STARTED _____
INSPECTOR _____ DATE COMPLETED _____

32849-61-D

Proprietary design: These drawings and design are protected by common law copyright. All patentable material contained herein and originating with Dominy + Associates Architects @ domusstudio LLP shall be the property of Dominy + Associates Architects @ domusstudio LLP
© COPYRIGHT October 09, 2014 at 10:24AM

Proprietary designs: These drawings and design are protected by common law copyright. All patentable material contained herein and originating with Dominy + Associates Architects @ domusstudio LLP shall be the property of Dominy + Associates Architects @ domusstudio LLP

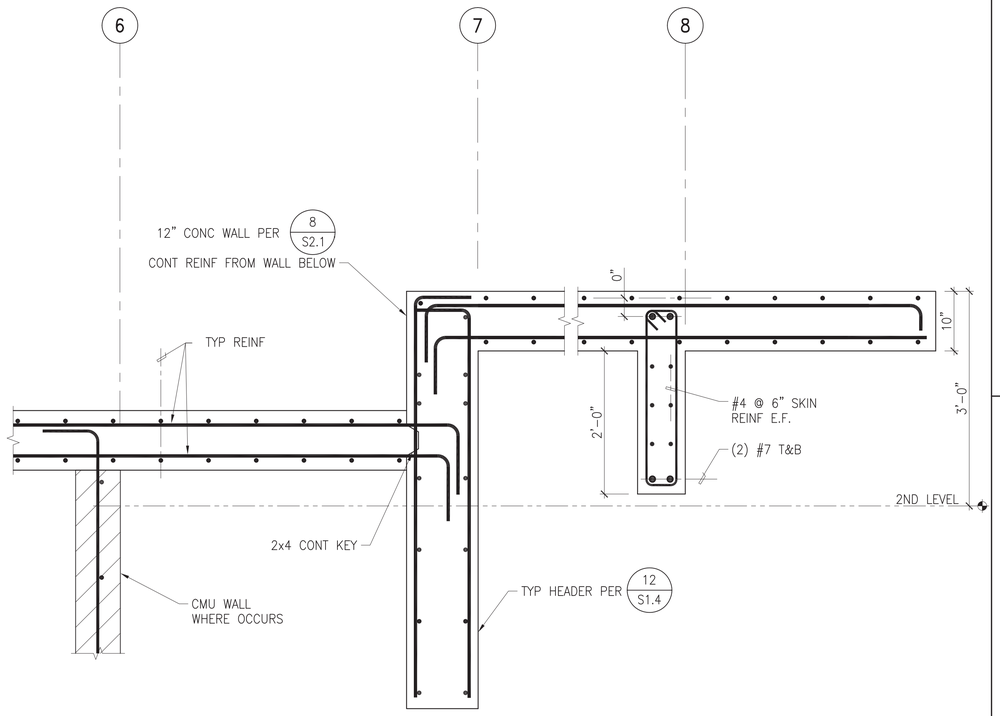

SCALE: 1" = 1'-0" 1

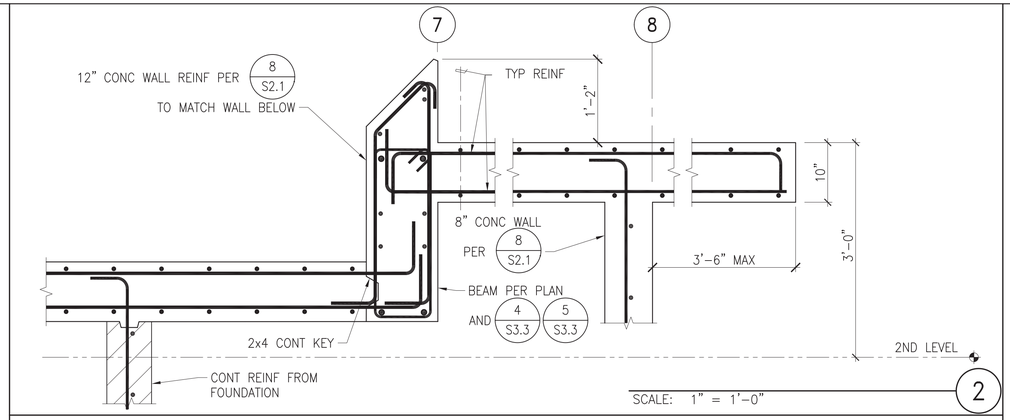

SCALE: 1" = 1'-0" 2

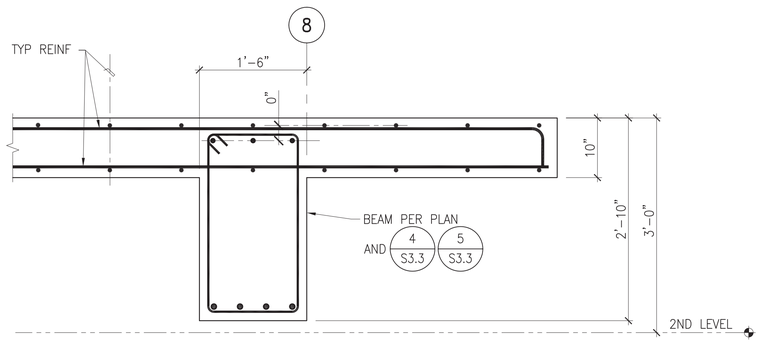

SCALE: 1" = 1'-0" 3

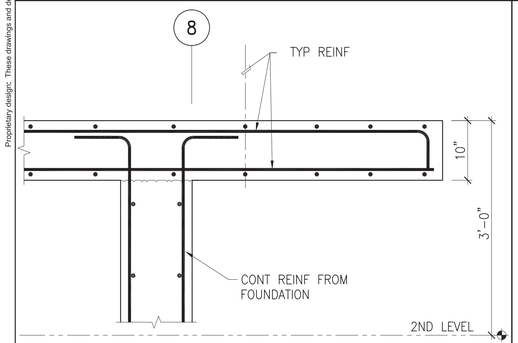

SCALE: 1" = 1'-0" 4

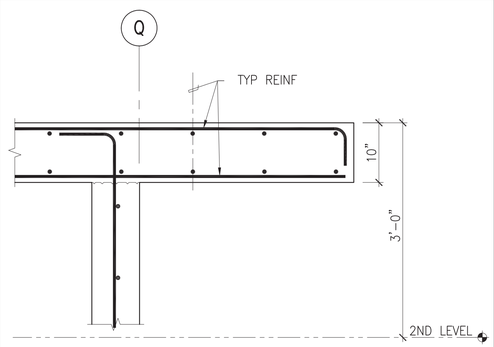

SCALE: 1" = 1'-0" 5

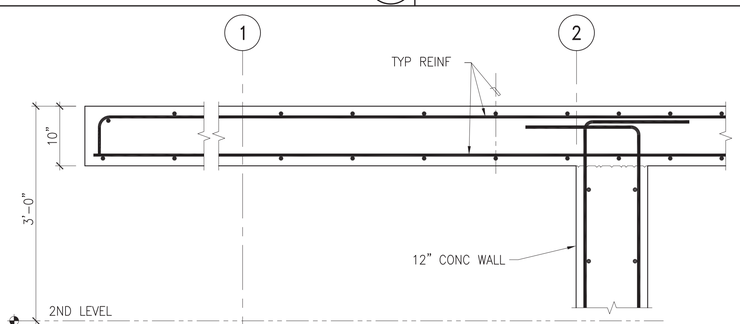

SCALE: 1" = 1'-0" 7

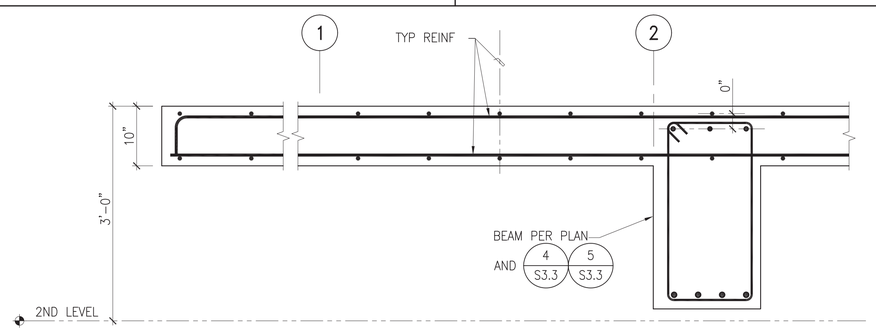

SCALE: 1" = 1'-0" 8

S-15

MARTIN & LIBBY
STRUCTURAL ENGINEERS
4452 Glacier Avenue, San Diego, CA 92120
Ph (619) 280-9307 F (619) 284-3533

SPEC. NO. 8147

REGISTERED PROFESSIONAL ENGINEER JEAN M. LIBBY Exp. 03-31-15 CIVIL STATE OF CALIFORNIA

PLANS FOR THE CONSTRUCTION OF

South Mission Beach Lifeguard Station

Second Floor Details S3.5

CITY OF SAN DIEGO, CALIFORNIA
ENGINEERING & CAPITAL PROJECTS
ARCHITECTURAL ENGINEERING & CONTRACTS DIVISION
SHEET 62 OF 94 SHEETS

APPROVED: _____ 10/13/2014
FOR CITY ENGINEER DATE

DESCRIPTION	BY	APPROVED	DATE	FILMED
ORIGINAL	WH/TT			

WBS S-00791
SUBMITTED BY: JIHAD SLEIMAN
PROJECT MANAGER
YOUSIF BENYAMIN
PROJECT ENGINEER
218-1693
CCS27 COORDINATES
1858-6253
CCS83 COORDINATES

CONTRACTOR _____ DATE STARTED _____
INSPECTOR _____ DATE COMPLETED _____

32849-62-D

© COPYRIGHT October 09, 2014 at 10:25AM

Proprietary design: These drawings and design are protected by common law copyright. All patentable material contained herein and originating with Dominy + Associates Architects @ domusstudio LLP shall be the property of Dominy + Associates Architects @ domusstudio LLP
© COPYRIGHT October 09, 2014 at 10:25AM

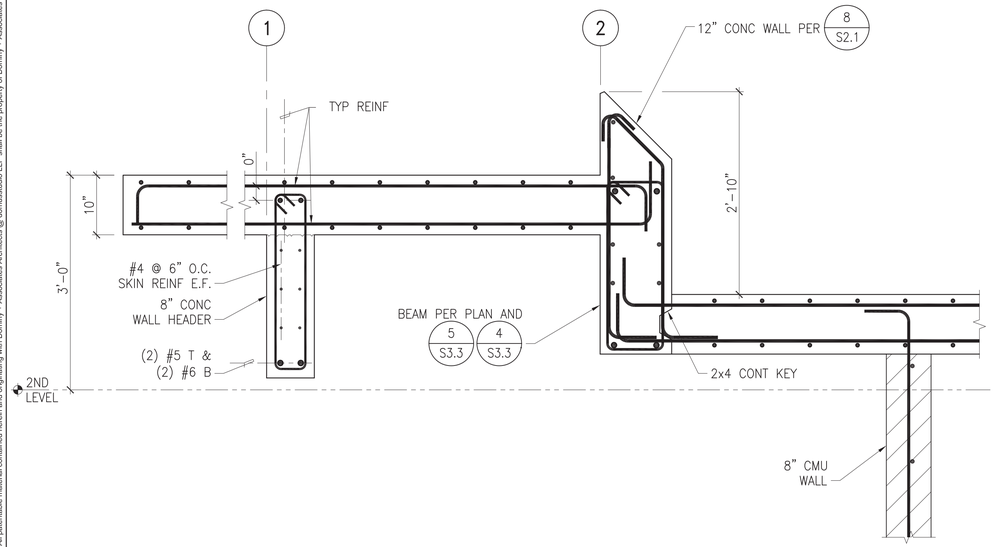

SCALE: 1" = 1'-0" 1

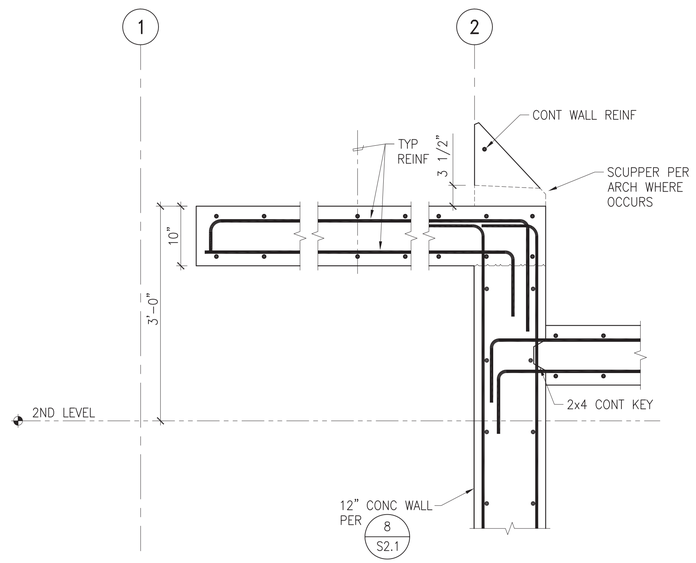

SCALE: 1" = 1'-0" 2

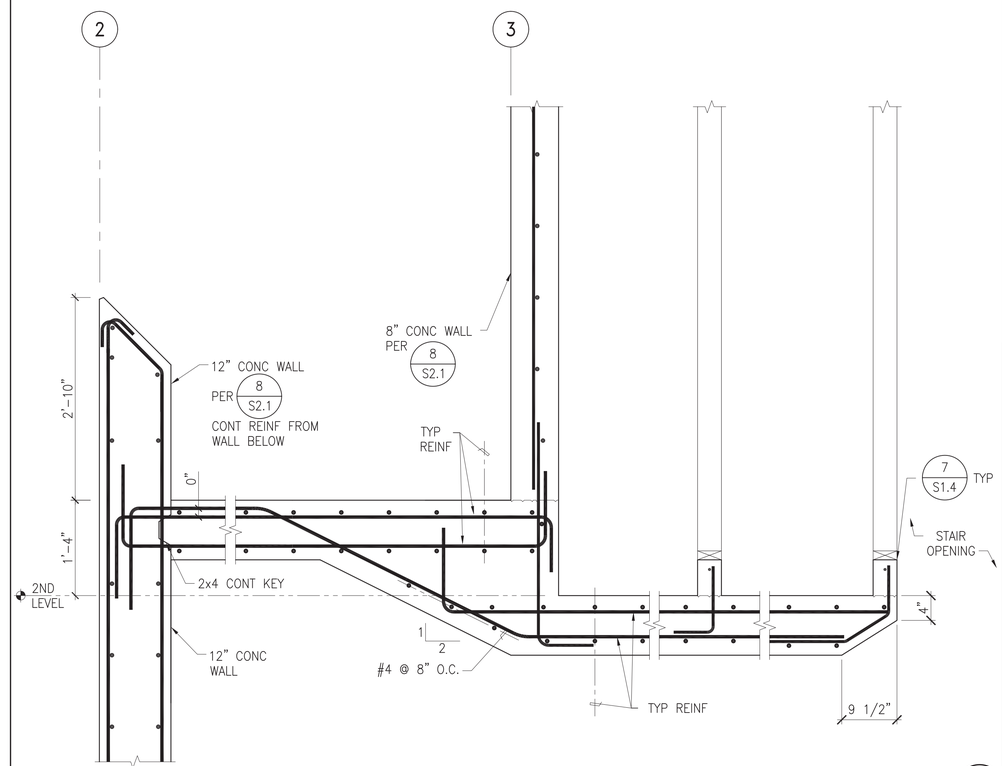

SCALE: 1" = 1'-0" 4

S-16

MARTIN & LIBBY
STRUCTURAL ENGINEERS
4452 Glacier Avenue, San Diego, CA 92120
Ph (619) 280-9307 F (619) 284-3533

SPEC. NO. 8147

REGISTERED PROFESSIONAL ENGINEER JEAN M. LIBBY Exp. 03-31-15 CIVIL STATE OF CALIFORNIA

PLANS FOR THE CONSTRUCTION OF

South Mission Beach Lifeguard Station

Second Floor Details — S3.6

CITY OF SAN DIEGO, CALIFORNIA
ENGINEERING & CAPITAL PROJECTS
ARCHITECTURAL ENGINEERING & CONTRACTS DIVISION
SHEET 63 OF 94 SHEETS

APPROVED: FOR CITY ENGINEER — DATE 10/13/2014

WBS S-00791

SUBMITTED BY: JIHAD SLEIMAN, PROJECT MANAGER

DESCRIPTION	BY	APPROVED	DATE	FILMED
ORIGINAL	WH/TT			

YOUSIF BENYAMIN, PROJECT ENGINEER
218-1693
CCS27 COORDINATES
1858-6253
CCS83 COORDINATES

CONTRACTOR _____ DATE STARTED _____
INSPECTOR _____ DATE COMPLETED _____

32849-63-D

Proprietary designs: These drawings and design are protected by common law copyright. All patentable material contained herein and originating with Dominy + Associates Architects @ domusstudio LLP shall be the property of Dominy + Associates Architects @ domusstudio LLP

© COPYRIGHT October 09, 2014 at 10:25AM

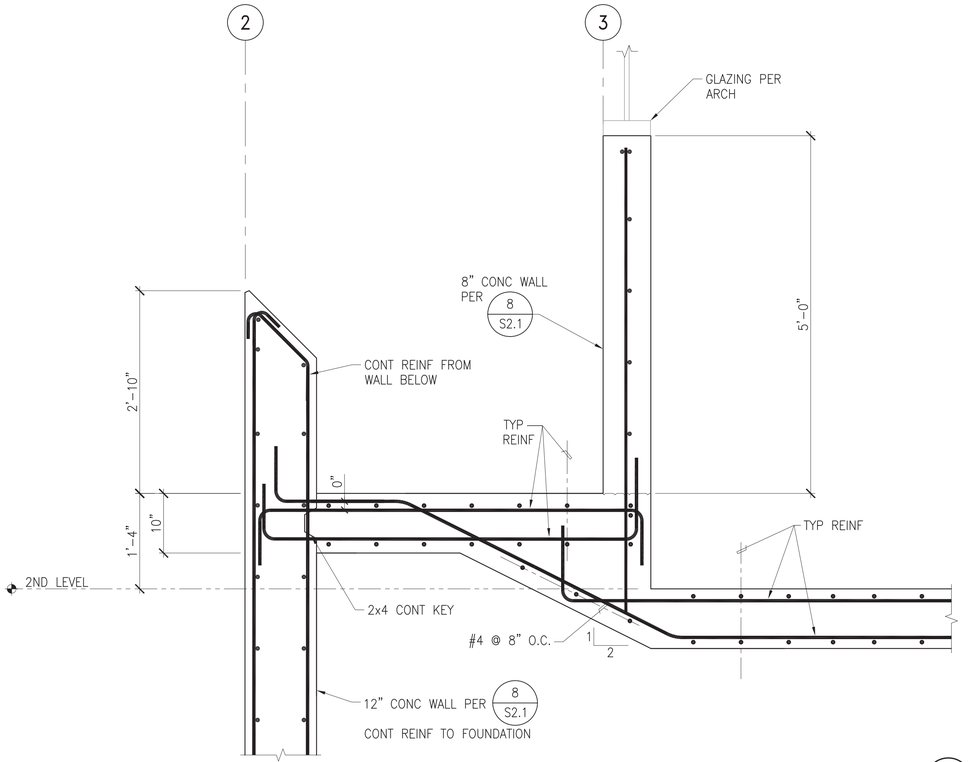

SCALE: 1" = 1'-0" 1

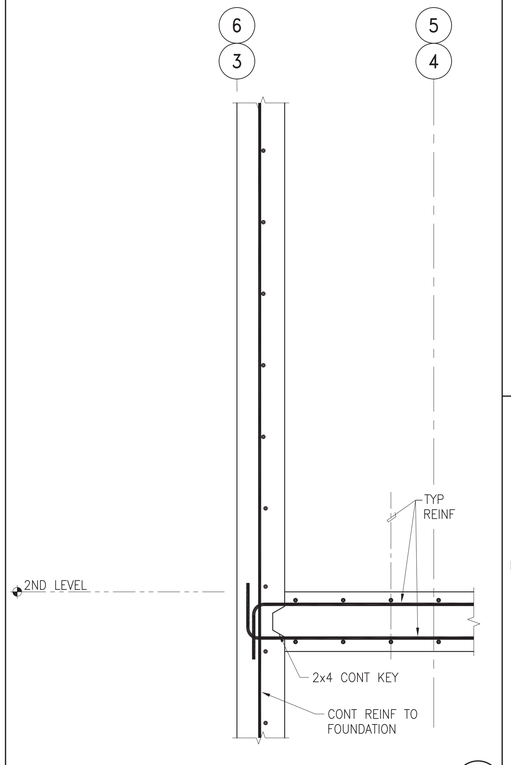

SCALE: 1" = 1'-0" 2

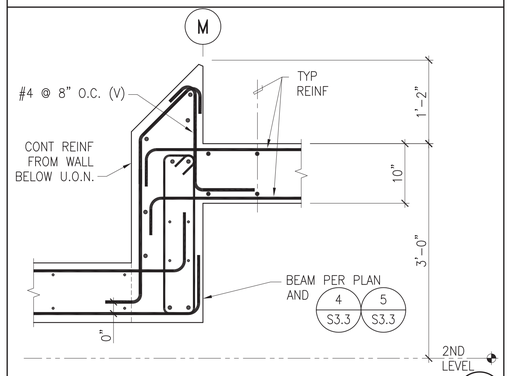

SCALE: 1" = 1'-0" 4

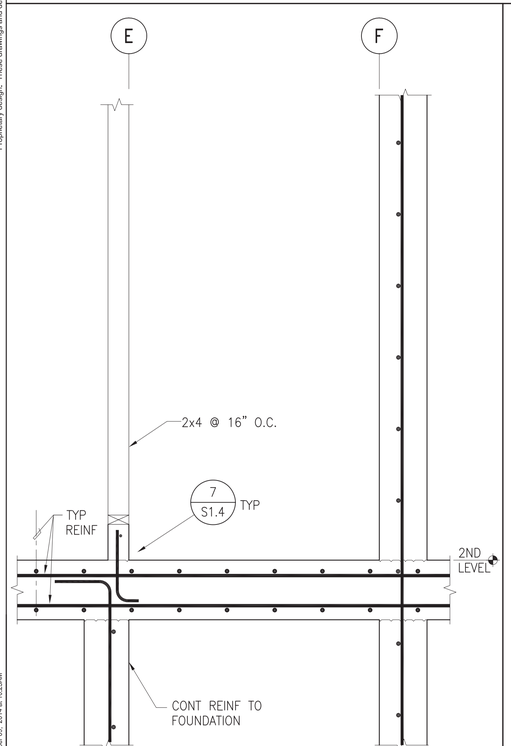

SCALE: 1" = 1'-0" 5

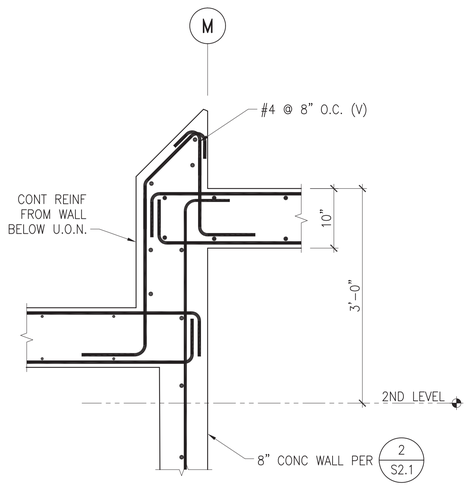

SCALE: 1" = 1'-0" 6

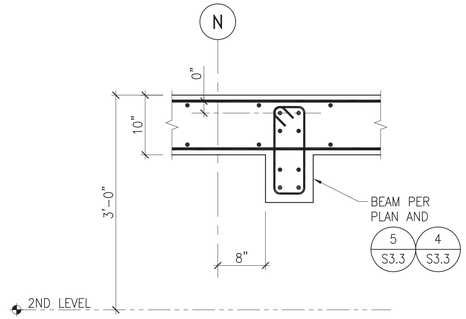

SCALE: 1" = 1'-0" 7

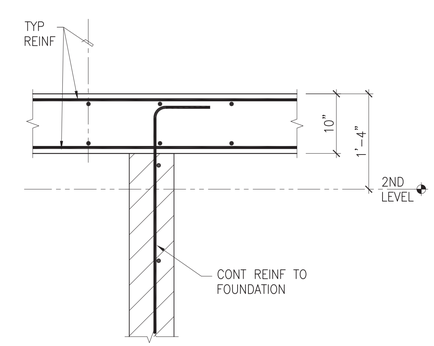

SCALE: 1" = 1'-0" 8

S-17

MARTIN & LIBBY
STRUCTURAL ENGINEERS
4452 Glacier Avenue, San Diego, CA 92120
Ph (619) 280-9307 F (619) 284-3533

SPEC. NO. 8147

REGISTERED PROFESSIONAL ENGINEER JEAN M. LIBBY Exp. 03-31-15 CIVIL STATE OF CALIFORNIA

PLANS FOR THE CONSTRUCTION OF

South Mission Beach Lifeguard Station

Second Floor Details — S3.7

CITY OF SAN DIEGO, CALIFORNIA
ENGINEERING & CAPITAL PROJECTS
ARCHITECTURAL ENGINEERING & CONTRACTS DIVISION
SHEET 64 OF 94 SHEETS

APPROVED: _____ 10/13/2014
FOR CITY ENGINEER — DATE

DESCRIPTION	BY	APPROVED	DATE	FILMED
ORIGINAL	WH/TT			

WBS S-00791

SUBMITTED BY:
JIHAD SLEIMAN
PROJECT MANAGER

YOUSIF BENYAMIN
PROJECT ENGINEER

218-1693
CCS27 COORDINATES

1858-6253
CCS83 COORDINATES

CONTRACTOR _____ DATE STARTED _____
INSPECTOR _____ DATE COMPLETED _____

32849-64-D

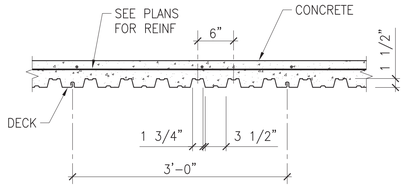

MINIMUM PROPERTIES				
GA	WEIGHT (P.S.F.)	I (IN^4)/FT	+S (IN^3)/FT	−S (IN^3)/FT
20	2.3	0.216	0.235	0.248

COMPOSITE STEEL DECK
SCALE: NONE — 1

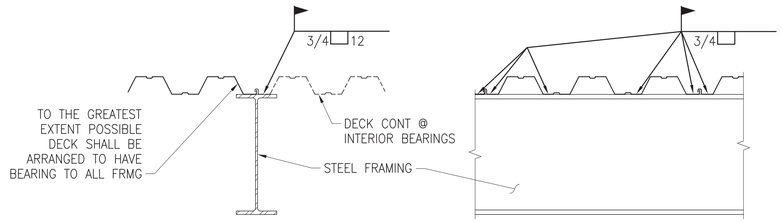

WELDING AT ALL BEARINGS PARALLEL TO FLUTES

WELDING AT ALL BEARINGS PERPENDICULAR TO FLUTES

NOTES:
1. ALL 3/4"ø PLUG WELDS SHALL BE 1/2"ø EFFECTIVE.
2. BUTTON PUNCH SIDE LAPS @ 36".
3. SHEAR STUDS, WHEN WELDED THRU DECK, MAY BE SUBSTITUTED FOR PLUG WELDS ON A ONE TO ONE BASIS.

COMPOSITE STEEL DECK WELDING
SCALE: NONE — 3

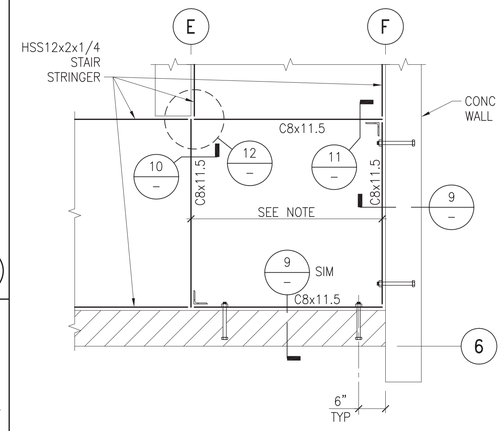

NOTE: 3 1/2" NORMAL WT CONC f'c = 4200 P.S.I. OVER 1 1/2"−20 GA GALV FORMLOK DECK WITH #4 @ 12" O.C; PUDDLE WELD TO BEARINGS PER TYP DET 3/– .

STAIR LANDING PLAN
SCALE: 3/4" = 1'−0" — 8

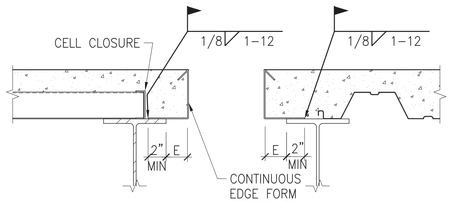

E	GA
2"	18
3"	16
4" & 5"	14
6" & 7"	12
8" & 9"	10

TYPICAL EDGE DECK DETAIL
SCALE: NONE — 5

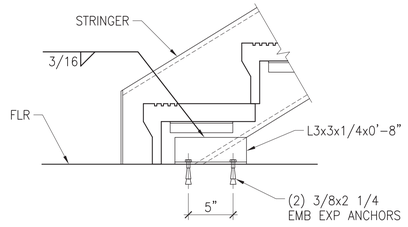

STAIR UP
SCALE: 1 1/2" = 1'−0" — 6

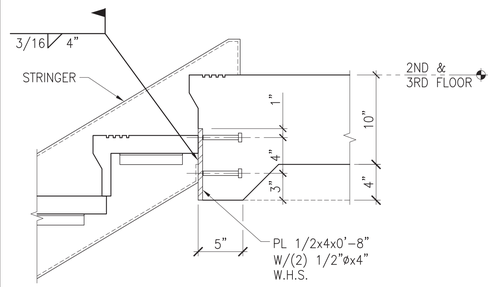

STAIR DOWN
SCALE: 1 1/2" = 1'−0" — 7

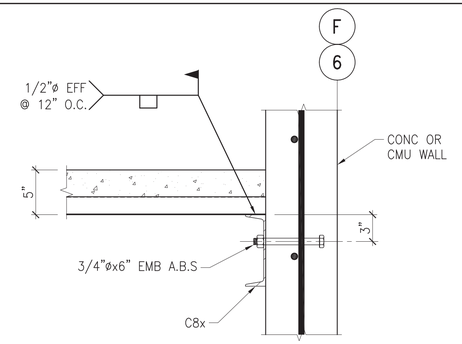

SCALE: 1 1/2" = 1'−0" — 9

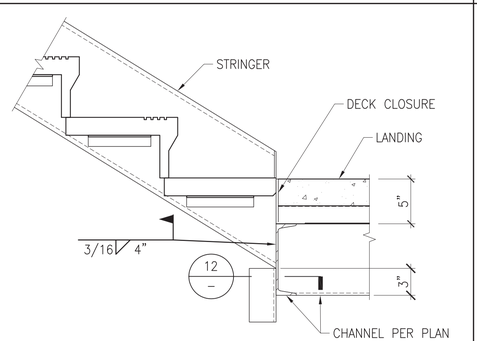

SCALE: 1 1/2" = 1'−0" — 10

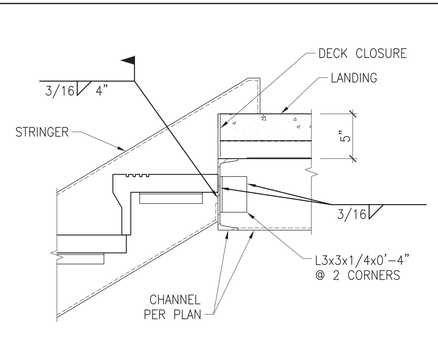

SCALE: 1 1/2" = 1'−0" — 11

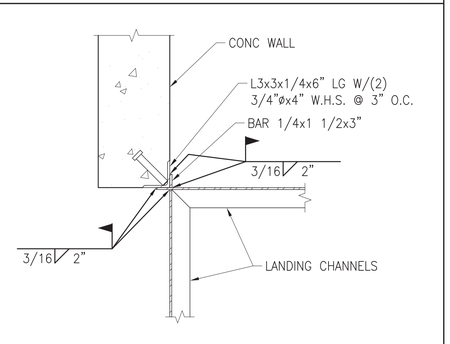

PLAN
SCALE: 1 1/2" = 1'−0" — 12

S-18

MARTIN & LIBBY
STRUCTURAL ENGINEERS
4452 Glacier Avenue, San Diego, CA 92120
Ph (619) 280-9307 F (619) 284-3533

SPEC. NO. 8147

REGISTERED PROFESSIONAL ENGINEER — JEAN M. LIBBY — Exp. 03-31-13 — CIVIL — STATE OF CALIFORNIA

PLANS FOR THE CONSTRUCTION OF

South Mission Beach Lifeguard Station

Details — S3.8

CITY OF SAN DIEGO, CALIFORNIA
ENGINEERING & CAPITAL PROJECTS
ARCHITECTURAL ENGINEERING & CONTRACTS DIVISION
SHEET 65 OF 94 SHEETS

APPROVED: FOR CITY ENGINEER — DATE: 10/13/2014

WBS S-00791

SUBMITTED BY: JIHAD SLEIMAN — PROJECT MANAGER

DESCRIPTION	BY	APPROVED	DATE	FILMED
ORIGINAL	WH/TT			

YOUSIF BENYAMIN — PROJECT ENGINEER

218−1693 — CCS27 COORDINATES

1858−6253 — CCS83 COORDINATES

CONTRACTOR _____ DATE STARTED _____
INSPECTOR _____ DATE COMPLETED _____

32849−65−D

Proprietary design: These drawings and design are protected by common law copyright. All patentable material contained herein and originating with Dominy + Associates Architects @ domusstudio LLP shall be the property of Dominy + Associates Architects @ domusstudio LLP
© COPYRIGHT October 09, 2014 at 10:25AM

Proprietary design: These drawings and design are protected by common law copyright. All patentable material contained herein and originating with Dominy + Associates Architects @ domusstudio LLP shall be the property of Dominy + Associates Architects @ domusstudio LLP

© COPYRIGHT October 07, 2014 at 2:59PM

MECHANICAL GENERAL NOTES

1. CONTRACTOR SHALL CAREFULLY REVIEW THE PLANS AND SPECIFICATIONS PRIOR TO BID. CONTRACTOR SHALL ALSO REVIEW PLANS AND SPECIFICATIONS OF OTHER RELATED TRADES (INCLUDING STRUCTURAL AND ELECTRICAL) PRIOR TO BID TO ENSURE AN ACCURATE UNDERSTANDING OF EXACT SCOPE OF WORK.

2. CONTRACTOR SHALL VERIFY AND COORDINATE ALL EQUIPMENT, CAPACITIES, SIZES, WEIGHTS, VOLTAGES, AND ALL OTHER SCHEDULED INFORMATION WITH ALL OTHER APPLICABLE TRADES AND WITH THE MANUFACTURER PRIOR TO INSTALLATION.

3. THESE DRAWINGS ARE ESSENTIALLY DIAGRAMMATIC AND ARE NOT INTENDED TO INDICATE ALL NECESSARY OFFSETS OF DUCTWORK AND PIPING. THE CONTRACTOR SHALL INSTALL MATERIAL AND EQUIPMENT IN A MANNER AS TO CONFORM TO STRUCTURE, AVOID OBSTRUCTIONS, PRESERVE HEADROOM, AND KEEP OPENINGS AND PASSAGEWAYS CLEAR. ALL INSTALLATIONS SHALL BE CONSISTENT WITH NORMALLY ACCEPTABLE INDUSTRY STANDARDS. THE CONTRACTOR SHALL NOTIFY THE OWNER IN WRITING OF ANY DISCREPANCIES OR CONFLICTS THAT WOULD AFFECT THE SYSTEM PERFORMANCE OR WHICH WOULD INCUR ADDITIONAL COSTS. THIS NOTIFICATION SHALL BE MADE PRIOR TO THE INSTALLATION.

4. EQUIPMENT INDICATED ON THESE DRAWINGS ARE SHOWN IN APPROXIMATE POSITION(S). CONTRACTOR SHALL FIELD VERIFY ALL CONDITIONS INCLUDING EQUIPMENT LOCATIONS, P.O.C.'S, AND STRUCTURAL MEMBERS PRIOR TO INSTALLATION. IN ALL CASES, ADEQUATE ACCESS (PER MANUFACTURER'S RECOMMENDATIONS AND CODE COMPLIANCE) FOR MAINTENANCE AND REPLACEMENT OF EQUIPMENT SHALL BE PROVIDED.

5. ALL WORK SHALL BE DONE IN ACCORDANCE WITH ALL APPLICABLE CODES. NOTHING SHOWN IN THE PLANS OR STATED IN THE SPECIFICATIONS IS INTENDED TO INDICATE THAT THE INSTALLATION OR CONNECTIONS OF ANY ITEM OR DEVICE SHOULD BE DONE CONTRARY TO MANUFACTURER'S INSTRUCTIONS AND ALL APPLICABLE CODES AND REGULATIONS. THE CONTRACTOR IS RESPONSIBLE TO ENSURE THAT THE INSTALLATION AND CONNECTIONS OF ALL ITEMS AND DEVICES CONFORMS TO MANUFACTURER'S INSTRUCTIONS AND TO ALL APPLICABLE CODES AND REGULATIONS.

6. ALL HVAC EQUIPMENT, MATERIAL, AND ALL CONNECTIONS THERETO SHALL BE INSTALLED COMPLETE PER MANUFACTURERS INSTRUCTIONS TO PROVIDE A COMPLETE AND FULLY OPERATIONAL SYSTEM.

7. DUCT SIZES INDICATED ON DRAWINGS ARE INSIDE NET CLEAR DIMENSIONS.

8. CONTRACTOR SHALL REVIEW ANY REVISION TO DUCTWORK, SIZING AND ROUTING WITH THE ENGINEER PRIOR TO INSTALLATION. DUCTWORK THAT IS RESIZED MUST MAINTAIN THE SAME CROSS-SECTIONAL AREA.

9. IF THE CONTRACTORS' USE OF SUBSTITUTE MATERIALS, EQUIPMENT OR METHODS OF INSTALLATION REQUIRES ANY CHANGES IN OTHER TRADES WORK FROM THAT SHOWN ON THE DRAWINGS, THE EXTRA COST OF THE OTHER TRADES WORK SHALL BE THE RESPONSIBILITY OF THE CONTRACTOR INITIATING THE SUBSTITUTION.

10. SUBMITTALS: APPROVAL OF SUBMITTALS DOES NOT RELEASE THE CONTRACTOR FROM OBLIGATIONS TO FULLY COMPLY WITH ALL REQUIREMENTS OF THE CONSTRUCTION DOCUMENTS OR APPLICABLE CODE REGULATIONS.

11. THE CONTRACTOR SHALL BE RESPONSIBLE FOR ALL CUTTING AND PATCHING TO COMPLETE THE INSTALLATION OF THE MECHANICAL WORK. ALL EXPOSED FINISHED AREAS THAT ARE DAMAGED AS A RESULT OF THIS WORK SHALL BE REPAIRED TO MATCH THE EXISTING CONDITION AT NO ADDITIONAL COST TO THE OWNER.

12. THE CONTRACTOR SHALL FURNISH ALL MATERIAL, LABOR, EQUIPMENT, APPURTENANCES, AND OTHER CONTRACTUAL ITEMS REQUIRED FOR THE COMPLETE INSTALLATION OF THE MECHANICAL WORK TO THE SATISFACTION OF THE OWNER.

13. THE CONTRACTOR SHALL OBTAIN AND PAY FOR ALL PERMITS, LICENSES, AND INSPECTIONS REQUIRED TO COMPLETE THE MECHANICAL WORK.

14. COORDINATE FINAL LOCATION OF ALL THERMOSTATS AND ROOM SENSORS DURING CONSTRUCTION. REFER TO THE ARCHITECTURAL MILLWORK PLANS AND ELEVATIONS PRIOR TO ROUGHING IN THERMOSTATS OR ROOM SENSORS.

15. MECHANICAL CONTRACTOR TO PROVIDE ALL ACCESS PANELS AND GYPBD MOUNTED ARCHITECTURAL ACCESS DOORS AS REQUIRED TO PROVIDE ACCESS TO ALL MAINTENANCE POINTS AT EQUIPMENT, SFD, ETC. ACCESS PANELS AND DOORS SHALL HAVE PAINT GRADE FINISH.

16. PROVIDE BALANCING DAMPERS AT ALL DIFFUSER RUN OUTS, BRANCH TAKE OFFS, OUTSIDE AIR DUCTS, AND MAIN DUCT BRANCHES.

17. ALL EARTHQUAKE RESISTANT DESIGNS FOR THE MECHANICAL EQUIPMENT SHALL CONFORM TO THE REGULATIONS OF THE CBC 2001 CHAPTER 16 (SECTION 1632A) STRUCTURAL FORCES. THE EQUIPMENT SHALL BE SECURED TO WITHSTAND A FORCE IN ANY DIRECTION AS DETERMINED BY SECTION 1632A.

18. PROVIDE ACOUSTICALLY LINED DUCTWORK WHERE INDICATED.

19. ROUND DUCT CONNECTION SIZES TO DIFFUSER AND GRILLES SHALL BE, AS A MINIMUM, THE SAME AS THE CONNECTION NECK DIAMETER, UNLESS NOTED OTHERWISE.

20. LIMIT USE OF FLEXIBLE DUCTWORK TO 5FT MAXIMUM. PROVIDE RIGID GALVANIZED SHEET METAL CONNECTIONS TO DIFFUSERS UNLESS A PROPER FULL RADIUS ELBOW CONNECTION CAN BE PROVIDED.

21. LOCATE VOLUME DAMPERS OVER ACCESSIBLE CEILINGS WHEREVER POSSIBLE. WHERE DAMPERS MUST BE LOCATED OVER NON-ACCESSIBLE CEILINGS, PROVIDE CONCEALED DAMPER REGULATORS. STANDARD OF ACCEPTANCE: YOUNG REGULATOR OR DURODYNE. CONCEALED REGULATORS ARE NOT REQUIRED IN WASHROOMS & CUSTODIAL ROOMS.

22. INSULATION APPLIED TO THE EXTERIOR SURFACE OF DUCTS LOCATED IN BUILDING SHALL HAVE A FLAME SPREAD OF NOT MORE THAN 25 AND A SMOKE-DEVELOPED RATING OF NOT MORE THAN 50 WHEN TESTED AS A COMPOSITE INSTALLATION INCLUDING INSULATION, FACING MATERIALS, TAPES AND ADHESIVES AS NORMALLY APPLIED.

23. DO NOT CUT OR NOTCH ANY STRUCTURAL MEMBERS WITHOUT STRUCTURAL ENGINEER'S APPROVAL.

24. ALL MATERIALS LOCATED WITHIN THE PLENUM MUST COMPLY WITH SECTION 604.2 OF THE UMC.

25. ALL COMBUSTIBLE MATERIALS LOCATED WITHIN THE PLENUM MUST COMPLY WITH SECTION 601.3 OF THE UMC.

26. DUCTWORK SHALL BE CONSTRUCTED AND INSTALLED PER SMACNA "HVAC DUCT CONSTRUCTION STANDARDS METAL AND FLEXIBLE" 2005 EDITION.

MECHANICAL LEGEND

SYMBOL	ABBREV	DESCRIPTION	SYMBOL	ABBREV	DESCRIPTION
⊠		CEILING SUPPLY DIFFUSER		IN.	INCH
◪		CEILING RETURN GRILLE		LBS.	POUNDS
⊠		CEILING EXHAUST REGISTER		LDB	LEAVING DRY BULB
⊏		WALL SUPPLY GRILLE		MAX.	MAXIMUM
Ⓣ		ROOM THERMOSTAT		MIN.	MINIMUM
Ⓢ		WALL SWITCH		NO.	NUMBER
	CAP.	CAPACITY		O.A.	OUTSIDE AIR
	C.F.M.	CUBIC FEET PER MINUTE		OPER.	OPERATING
	COMP.	COMPRESSOR		SENS.	SENSIBLE
	COND.	CONDENSER		S.F.	SQUARE FEET
	DB	DRY BULB		S.P.	STATIC PRESSURE
	D/G	DOOR GRILLE		TYP	TYPICAL
	ENT.	ENTERING		U/C	UNDERCUT DOOR
	EXT.	EXTERNAL		V./PH./HZ.	VOLTS/PHASE/HERTZ
	EQUIP.	EQUIPMENT		WT.	WEIGHT
	H.P.	HORSEPOWER			

DIFFUSER / REGISTER OR GRILLE TYPE

- TYPE
- SIZE
- AIR QUANTITY (CFM)

EQUIPMENT IDENTIFICATION SYMBOL

- EQUIPMENT TYPE
- EQUIPMENT IDENTIFIER

MECHANICAL SHEET INDEX

SHEET NO.	SHEET CONTENTS
M0.1	MECHANICAL LEGENDS AND GENERAL NOTES
M0.2	MECHANICAL SCHEDULES
M0.3	MECHANICAL TITLE 24 SHEETS
M0.4	MECHANICAL TITLE 24 SHEETS
M0.5	MECHANICAL TITLE 24 SHEETS
M1.1	FIRST FLOOR MECHANICAL PLAN
M1.2	SECOND FLOOR AND ROOF MECHANICAL PLANS
M1.3	OBSERVATION FLOOR MECHANICAL PLAN
M4.1	MECHANICAL DETAILS
M4.2	MECHANICAL DETAILS

CODE COMPLIANCE NOTES

1. CALIFORNIA MECHANICAL CODE 2010 (CMC 2010), CALIFORNIA PLUMBING CODE (2010) AND 2008 TITLE 24 ENERGY STANDARDS ARE THE CURRENT CODES/STANDARDS THAT ARE APPLICABLE TO THIS PROJECT.

2. EXHAUST DUCTS SHALL BE EQUIPPED WITH BACK-DRAFT DAMPERS (SECTION 504.0 CMC).

3. ROOF ACCESS LADDER SHALL COMPLY WITH SECTION 304 CMC.

4. PROVIDE SMOKE DETECTORS IN MAIN SUPPLY AIR DUCTS OF AIR MOVING SYSTEMS EXCEEDING 2,000 CFM PER SECTION 609.0 CMC.

5. DRYER VENTS SHALL BE EQUIPPED WITH BACK-DRAFT DAMPERS (SECTION 504.0 CMC).

6. EXHAUST DUCT FOR TYPE II DRYERS SHALL COMPLY WITH SECTION 905.5 CMC.

7. TYPE II CLOTHES DRYERS SHALL BE EQUIPPED OR INSTALLED WITH LINT CONTROLLING MEANS.

8. CERTIFICATE OF ACCEPTANCE (MECH-2A AND ENV-2A) AND ALL RELATED ACCEPTANCE DOCUMENTS SHALL BE SUBMITTED TO THE FIELD INSPECTOR DURING CONSTRUCTION. CERTIFICATE OF OCCUPANCY WILL NOT BE ISSUED UNTIL THESE FORMS ARE REVIEWED AND APPROVED.

9. INSULATION MATERIAL SHALL MEET THE CALIFORNIA QUALITY STANDARD PER SECTION 118 ENERGY EFFICIENCY STANDARDS (EES).

10. DOORS AND WINDOWS SHALL MEET THE MINIMUM INFILTRATION REQUIREMENTS PER SECTION 116 EES.

11. ALL PIPING AND DUCT WORK SHALL BE INSULATED CONSISTENT WITH THE REQUIREMENTS OF SECTIONS 118, 123, 124 TITLE 24 ENERGY STANDARDS AND TABLE 6-6A AND 6-6B OF CMC.

12. ALL HVAC SYSTEMS SHALL MEET THE CONTROL REQUIREMENTS PER SECTION 112 AND 122 EES.

13. ALL HVAC EQUIPMENT AND APPLIANCES SHALL MEET THE REQUIREMENTS PER SECTION 111-113, 115, 120-124 TITLE 24 ENERGY STANDARDS.

14. OCCUPIED AREAS OF MECHANICALLY VENTILATED BUILDINGS SHALL BE PROVIDED WITH AIR FILTRATION MEDIA FOR OUTSIDE AND RETURN AIR PRIOR TO OCCUPANCY THAT PROVIDES AT LEAST MERV OF 8 (SEC 5.504.5.3), PLEASE SHOW ON THE PLANS.

15. COVERING OF DUCT OPENINGS AND PROTECTION OF MECHANICAL EQUIPMENT DURING CONSTRUCTION SHALL BE PROVIDED PER SECTION 5.504.3 OF THE CALIFORNIA GREEN BUILDING.

16. REGULARLY OCCUPIED AREAS OF THE BUILDING SHALL BE PROVIDED WITH AIR FILTRATION MEDIA, WHICH PROVIDES AT LEAST A MERV OF 8, FOR OUTSIDE AND RETURN AIR PRIOR TO OCCUPANCY.

17. CLEARANCES OF MINIMUM 25 FT SHALL BE PROVIDED BETWEEN OUTSIDE AIR INTAKES OF HVAC UNITS AND OUTDOOR AREAS THAT ARE PROVIDED FOR SMOKING.

18. BUILDING ASSEMBLIES AND COMPONENTS WITH STC VALUES DETERMINED IN ACCORDANCE WITH ASTM E90 AND ASTM E413 SHALL BE EMPLOYED.

19. WALL AND FLOOR-CEILING ASSEMBLIES MAKING UP THE BUILDING ENVELOPE SHALL HAVE AN STC VALUE OF AT LEAST 50 AND EXTERIOR WINDOWS SHALL HAVE A MINIMUM STC OF 30 PER SECTION 5.507.4 CGBSC.

M-1

SPEC. NO. 8147

M-E Engineers, Inc.
3760 Convoy St. Suite 340
San Diego CA 92111
t. 858.565.3900 / f. 858.565.3906
www.me-engineers.com

REGISTERED PROFESSIONAL ENGINEER LAWRENCE A. BROOKS NO.M16665 MECHANICAL STATE OF CALIFORNIA
10/07/14

PLANS FOR THE CONSTRUCTION OF

South Mission Beach Lifeguard Station

MECHANICAL LEGEND & GENERAL NOTES — M0.1

CITY OF SAN DIEGO, CALIFORNIA
ENGINEERING & CAPITAL PROJECTS
ARCHITECTURAL ENGINEERING & CONTRACTS DIVISION
SHEET 66 OF 94 SHEETS

WBS S-00791

APPROVED: FOR CITY ENGINEER — DATE 10/13/2014

SUBMITTED BY: JIHAD SLEIMAN, PROJECT MANAGER
YOUSIF BENYAMIN, PROJECT ENGINEER

DESCRIPTION	BY	APPROVED	DATE	FILMED
ORIGINAL	L A B			

218-1693 CCS27 COORDINATES
1858-6253 CCS83 COORDINATES

CONTRACTOR ______ DATE STARTED ______
INSPECTOR ______ DATE COMPLETED ______

32849-66-D

Proprietary design: These drawings and design are protected by common law copyright. All patentable material contained herein and originating with Dominy + Associates Architects @ domusstudio LLP shall be the property of Dominy + Associates Architects @ domusstudio LLP

ROOFTOP PACKAGE HEAT PUMP SCHEDULE

EQUIP. NO.	MANUFACTURER	MODEL	C.F.M.	MIN. O.A.	EXT. S.P. (IN. H2O)	ELECTRICAL DATA: COMP. RLA	COMP. LRA	COND. FAN FLA	INDOOR FAN FLA	INDOOR FAN H.P.	V. / PH. / HZ.	MCA (AMP)	MOCP (AMP)	HEATING: CAP. (MBH)	LDB (°F)	COOLING: TOTAL CAP. (MBH)	SENS. (MBH)	ENT. DB (°F)	ENT. WB (°F)	AMBIENT (°F)	LDB (°F)	EER/SEER	HSPF	OPER. WT. (LBS.)	REMARKS
RTU 1	YORK	B6HZ030A06	900	580	1.0	14.7	73.0	1.2	4.1	0.5	208/1/60	23.7	30.0	27.0	95	26.0	16.8	80	67	95	59	11.0/13.0	7.7	460	1 2 3 4 5 6
RTU 2	YORK	B6HQ060A06	2,000	135	1.0	25.0	134.0	4.4	9.1	1.5	208/1/60	44.8	60.0	53.0	95	50.7	30.0	80	67	95	57	12.0/14.0	7.7	700	1 2 3 4 6

(1) DISCONNECT PROVIDED BY DIVISION 26. (2) PROVIDE PRE-FABRICATED ROOF MOUNTING CURB. (3) R-410A REFRIGERANT. (4) PROVIDE ENTIRE UNIT WITH CORROSION RESISTANT COATING, SEE SPECIFICATION SECTION "CORROSION RESISTANT COATING". (5) INTERLOCK OPERATION WITH EF-4 & EF-5. (6) PROVIDE OUTSIDE AIR PACKAGE FOR ROOFTOP UNITS PROVENT PART #0A2P0AFF1860100BL OR EQUAL.

SPLIT SYSTEM HEAT PUMP UNIT SCHEDULE

EQUIP. NO.	MANUFACTURER	MODEL	C.F.M.	MIN. O.A.	EXT. S.P. (IN. H2O)	ELECTRICAL DATA: COMP. RLA	COMP. LRA	COND. FAN FLA	INDOOR FAN FLA	FAN H.P.	V. / PH. / HZ.	MCA (AMP)	MOCP (AMP)	HEATING: CAP. (MBH)	LDB (°F)	COOLING: TOTAL CAP. (MBH)	SENS. (MBH)	ENT. DB (°F)	ENT. WB (°F)	AMBIENT (°F)	LDB (°F)	SEER	HSPF	OPER. WT. (LBS.)	REMARKS
CU 1	YORK	YHJD18S41S2	–	–	–	9.0	48.0	0.7	–	1/10	208/1/60	11.9	15.0	14.0	–	17.9	10.4	–	–	95	–	14.0	7.7	250	1 3
FC 1	YORK	AHE18B3XH21	450	125	0.4	–	–	–	2.8	1/3	208/1/60	3.5	15.0	14.0	95	17.9	10.4	77	65	–	57.8	14.0	–	180	1 2

(1) DISCONNECT PROVIDED BY DIVISION 26. (2) PROVIDE THERMAL EXPANSION VALVE TXV KIT S1-1TVM4G1. (3) PROVIDE ENTIRE UNIT WITH CORROSION RESISTANT COATING, SEE SPECIFICATION SECTION "CORROSION RESISTANT COATING".

FAN SCHEDULE

EQUIP. NO.	MANUFACTURER & MODEL	SERVICE	LOCATION	TYPE	CFM	TSP (IN.)	FAN (RPM)	SONES	ELECTRICAL: V. / PH. / HZ.	ELECTRICAL: WATTS	OPER. WT. (LBS.)	REMARKS
EF 1	GREENHECK SP-A190	FIRST AID ROOM (101)	CEILING	CEILING EXHAUST FAN	150	0.3	1,373	3.0	115/1/60	113 W	30	1 2 3 4
EF 2	GREENHECK SP-A290	BOARD STORAGE (114)	CEILING	CEILING EXHAUST FAN	220	0.3	1000	3.0	115/1/60	81 W	35	1 2 3 8
EF 3	GREENHECK SP-A125	RESTROOM (112)	CEILING	CEILING EXHAUST FAN	75	0.3	1100	1.5	115/1/60	53 W	30	1 2 3 5
EF 4	GREENHECK AE-10-420-A8	LOCKER ROOM (103)	ROOF	AXIAL EXHAUST FAN	250	0.3	1725	12.0	115/1/60	1/8 HP	50	1 2 3 6 9
EF 5	GREENHECK AE-10-420-A8	LOCKER ROOM (104)	ROOF	AXIAL EXHAUST FAN	250	0.3	1725	12.0	115/1/60	1/8 HP	50	1 2 3 6 9
EF 6	GREENHECK SP-A125	JANITOR ROOM (108)	CEILING	CEILING EXHAUST FAN	75	0.3	1100	1.5	115/1/60	53 W	30	1 2 3 7
EF 7	GREENHECK SP-A190	ELECTRICAL ROOM (109)	CEILING	CEILING EXHAUST FAN	140	0.3	1,330	2.7	115/1/60	113 W	30	1 2 3 7
EF 8	GREENHECK SP-A125	RESTROOM (201)	CEILING	CEILING EXHAUST FAN	75	0.3	1100	1.5	115/1/60	53 W	30	1 2 3 5
EF 9	GREENHECK SP-A125	TELECOM ROOM (115)	CEILING	CEILING EXHAUST FAN	75	0.3	1100	1.5	115/1/60	53 W	30	1 2 3 7
SF 1	GREENHECK AS-12-433-A4	RESCUE VEHICLES (105)	ROOF	AXIAL SUPPLY FAN	700	0.4	1725	15.1	115/1/60	1/4 HP	50	1 3 4 9

(1) PROVIDE SOLID STATE SPEED CONTROL. (2) PROVIDE BACKDRAFT DAMPER. (3) MANUFACTURER TO PROVIDE INTEGRAL DISCONNECT. (4) OPERATION THROUGH WALL SWITCH.
(5) INTERLOCK OPERATION WITH LIGHTS. (6) INTERLOCK OPERATION WITH RTU-1. (7) PROVIDE LINE VOLTAGE THERMOSTAT. (8) PROVIDE CONTINUOUS OPERATION.
(9) PROVIDE WITH FACTORY 8" ROOF CURB.

AIR DEVICE SCHEDULE

EQUIP. NO.	MANUFACTURER & MODEL	SERVICE	SURFACE TYPE	MAX CFM	NECK SIZE	FACE SIZE	MAX NC	REMARKS
CD-1 –	TITUS – MCD-AA	SUPPLY	LAY-IN CEILING	200	10"x10"	24"x24"	25	2-WAY 90°
CD-2 –	TITUS – MCD-AA	SUPPLY	GYP BOARD CEILING	700	14"x14"	16"x16"	25	1-WAY
WG-1 –	TITUS – 301FL	SUPPLY	SIDEWALL	225	12"x6"	14"x8"	20	
WG-2 –	TITUS – 301FL	SUPPLY	SIDEWALL	350	18"x6"	20"x8"	20	
EG-1 –	TITUS – 50F	EXHAUST	GYP BOARD CEILING	125	6"x6"	8"x8"	30	
WR-1 –	TITUS – 350FL	RETURN	SIDEWALL	400	16"x18"	18"x20"	30	
RG-1 –	TITUS – 8F	RETURN	LAY-IN CEILING	200	10"x10"	24"x24"	30	
RG-2 –	TITUS – 50F	RETURN	GYP BOARD CEILING	1450	6"x6"	8"x8"	20	

© COPYRIGHT October 07, 2014 at 2:57PM

M-2

me engineers
M-E Engineers, Inc.
3760 Convoy St. Suite 340
San Diego CA 92111
t.858.565.3900 / f.858.565.3906
www.me-engineers.com

SPEC. NO. 8147

REGISTERED PROFESSIONAL ENGINEER LAWRENCE A. BROOKS NO.M16665 MECHANICAL STATE OF CALIFORNIA
10/07/14

PLANS FOR THE CONSTRUCTION OF
South Mission Beach Lifeguard Station

MECHANICAL SCHEDULES | M0.2

CITY OF SAN DIEGO, CALIFORNIA
ENGINEERING & CAPITAL PROJECTS
ARCHITECTURAL ENGINEERING & CONTRACTS DIVISION
SHEET 67 OF 94 SHEETS

WBS S-00791

APPROVED FOR CITY ENGINEER — DATE 10/13/2014

SUBMITTED BY: JIHAD SLEIMAN, PROJECT MANAGER

DESCRIPTION	BY	APPROVED	DATE	FILMED
ORIGINAL	L A B			

YOUSIF BENYAMIN, PROJECT ENGINEER

218-1693 CCS27 COORDINATES

1858-6253 CCS83 COORDINATES

CONTRACTOR _____ DATE STARTED _____
INSPECTOR _____ DATE COMPLETED _____

32849-67-D

Proprietary design: These drawings and design are protected by common law copyright. All patentable material contained herein and originating with Dominy + Associates Architects @ domusstudio LLP shall be the property of Dominy + Associates Architects @ domusstudio LLP

PERFORMANCE CERTIFICATE OF COMPLIANCE (Part 1 of 3) PERF-1C

Project Name: South Mission Beach Lifeguard Station | Date: 5/1/2014

Project Address	Climate Zone	Total Cond. Floor Area	Addition Floor Area
700 N. Jetty Rd. San Diego, CA	CA Climate Zone 07	2,702	n/a

GENERAL INFORMATION

Building Type: ☑ Nonresidential ☐ High-Rise Residential ☐ Hotel/Motel Guest Room ☐ Schools (Public School) ☐ Relocatable - indicate ☐ specific climate zone ☐ Relocatable Public School Bldg. ☑ Conditioned Spaces ☐ Unconditioned Spaces ☐ all climates

Phase of Construction: ☑ New Construction ☐ Addition ☐ Alteration

STATEMENT OF COMPLIANCE

This certificate of compliance lists the building features and specifications needed to comply with Title 24, Parts 1 and 6 of the California Code of Regulations. This certificate applies only to a Building using the performance compliance approach.

The documentation author hereby certifies that the documentation is accurate and complete.

Documentation Author

Name: Ricky Samonte | Signature | Date: 5/1/2014

Company: M/E Engineers, Inc. | Address: 10113 Jefferson Blvd. | City/State/Zip: Culver City, CA 90232 | Phone: (310) 642-8700

The Principal Designer hereby certifies that the proposed building design represented in this set of construction documents is consistent with the other compliance forms and worksheets, with the specifications, and with any other calculations submitted with this permit application. The proposed building has been designed to meet the energy efficiency requirements contained in sections 110, 116 through 118, and 140 through 149 of Title 24, Part 6. Please check one:

ENV.	LTG.	MECH.	
☐	☐	☒	I hereby affirm that I am eligible under the provisions of Division 3 of the Business and Professions Code to sign this document as the person responsible for its preparation; and that I am licensed in the State of California as a civil engineer, mechanical engineer, electrical engineer, or I am a licensed architect.
☐	☐	☐	I affirm that I am eligible under the provisions of Division 3 of the Business and Professions Code by section 5537.2 or 6737.3 to sign this document as the person responsible for its preparation; and that I am a licensed contractor performing this work.
☐	☐	☐	I affirm that I am eligible under Division 3 of the Business and Professions Code to sign this document because it pertains to a structure or type of work described as exempt pursuant to Business and Professions Code Sections 5537, 5538 and 6737.1

Principal Envelope Designer

Name: Wayne Holtan | Signature | Date: 10/13/14

Company: Domus Studio Architecture | Address: 2150 West Washington Suite 303 | City/State/Zip: San Diego, CA, 92110 | License #: C12113 | Phone: (619) 692-9393

Principal Mechanical Designer

Name | Signature | Date: 10/07/2014

Company: M-E Engineers, Inc. | Address: 3750 Convoy Street | City/State/Zip: San Diego, CA, 92111 | License #: M16665 | Phone: (858) 565-3900

Principal Lighting Designer

Name | Signature | Date

Company: Lighting Compliance Not In The Scope Of This Submittal | Address | City/State/Zip | License # | Phone

INSTRUCTIONS TO APPLICANT COMPLIANCE & WORKSHEETS (check box if worksheets are included)

☑ ENV-1C	Certificate of Compliance. Required on plans.	☑ MECH-1C	Certificate of Compliance. Required on plans.
☐ LTG-1C	Certificate of Compliance. Required on plans.	☑ MECH-2C	Air/Water Side/Service Hot Water & Pool Requirements.
☐ LTG-2C	Lighting Controls Credit Worksheet.	☑ MECH-3C	Mechanical Ventilation and Reheat.
☐ LTG-3C	Indoor Lighting Power Allowance.	☑ MECH-5C	Mechanical Equipment Details.

PERFORMANCE CERTIFICATE OF COMPLIANCE (Part 2 of 3) PERF-1C

Project Name: South Mission Beach Lifeguard Station | Date: 5/1/2014

ANNUAL TDV ENERGY USE SUMMARY (kBtu/sqft-yr)

Energy Component	Standard Design	Proposed Design	Compliance Margin
Space Heating	8.45	8.53	-0.08
Space Cooling	84.94	76.95	7.99
Indoor Fans	77.33	74.56	2.77
Heat Rejection	0.00	0.00	0.00
Pumps & Misc.	0.00	0.00	0.00
Domestic Hot Water	36.57	35.82	0.74
Lighting	48.77	48.77	0.00
Receptacle	40.40	40.40	0.00
Process	0.00	0.00	0.00
Process Lighting	0.00	0.00	0.00
TOTALS	296.46	285.03	11.43

Percent better than Standard: 3.9 % (3.9 % excluding process)

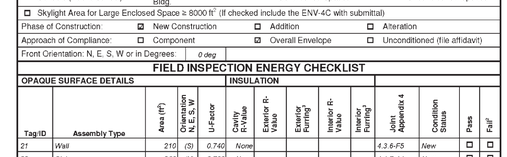

BUILDING COMPLIES

GENERAL INFORMATION

Building Orientation	(N) 0 deg	Conditioned Floor Area	2,702 sqft.
Number of Stories	3	Unconditioned Floor Area	0 sqft.
Number of Systems	3	Conditioned Footprint Area	1,482 sqft.
Number of Zones	11	Natural Gas Available On Site	Yes

	Orientation	Gross Area		Glazing Area		Glazing Ratio
Front Elevation	(N)	1,144	sqft.	284	sqft.	24.8 %
Left Elevation	(E)	179	sqft.	48	sqft.	26.8 %
Rear Elevation	(S)	1,326	sqft.	245	sqft.	18.5 %
Right Elevation	(W)	390	sqft.	208	sqft.	53.3 %
Total		3,039	sqft.	785	sqft.	25.8 %
Roof		1,680	sqft.	0	sqft.	0.0 %

	Standard		Proposed		
Prescriptive Lighting Power Density	0.661	W/sqft.	0.661	W/sqft.	Prescriptive Values for Comparison only. See LTG-1C for allowed LPD.
Prescriptive Envelope TDV Energy	94,793		115,289		

Remarks:

PERFORMANCE CERTIFICATE OF COMPLIANCE (Part 3 of 3) PERF-1C

Project Name: South Mission Beach Lifeguard Station | Date: 5/1/2014

ZONE INFORMATION

System Name	Zone Name	Occupancy Type	Floor Area (sqft.)	Inst. LPD (W/sf)[1]	Ctrl. Credits (W/sf)[1]	Allowed LPD Area (W/sf)[1]	Tailored (W/sf)[1]	Proc. Loads (W/sf)
FC-1 (First Floor)	First Aid Room	Medical and Clinical Care	283	*1.200				
	Support	Corridor/Restroom/Support	518	*0.600				
RTU-1 (First Floor)	Reception	Lobby, Main Entry	260	*1.500				
	Locker Room	Locker/Dressing Room	616	*0.800				
	Support	Corridor/Restroom/Support	129	*0.600				
RTU-2 (Second Floor)	Ready Room	Office > 250 sqft	276	*0.900				
	Restroom	Corridor/Restroom/Support	55	*0.600				
	Admin	Office > 250 sqft	105	*0.900				
	Stairs	All Others	206	*0.600				
	Observation Level	Office > 250 sqft	214	*0.900				
	Storage	All Others	40	*0.600				

Notes: 1. See LTG-1C (Items marked with asterisk, see LTG-1C by others) 2. See LTG-2C 3. See LTG-3C (by others) 4. See LTG-4C. Items above require special documentation

EXCEPTIONAL CONDITIONS COMPLIANCE CHECKLIST

The local enforcement agency should pay special attention to the items specified in this checklist. These items require special written justification and documentation, and special verification to be used with the performance approach. The local enforcement agency determines the adequacy of the justifications, and may reject a building or design that otherwise complies based on the adequacy of the special justification and documentation submitted.

The exceptional features listed in this performance approach application have specifically been reviewed. Adequate written justification and documentation for their use have been provided by the applicant.

Authorized Signature or Stamp _____

CERTIFICATE OF COMPLIANCE AND FIELD INSPECTION ENERGY CHECKLIST (Part 1 of 3) ENV-1C

Project Name: South Mission Beach Lifeguard Station | Date: 5/1/2014

Project Address	Climate Zone	Total Cond. Floor Area	Addition Floor Area
700 N. Jetty Rd. San Diego, CA	7	2,702	n/a

GENERAL INFORMATION

Building Type: ☑ Nonresidential ☐ High-Rise Residential ☐ Hotel/Motel Guest Room ☐ Schools (Public School) ☐ Relocatable Public School Bldg. ☑ Conditioned Spaces ☐ Unconditioned Spaces

☐ Skylight Area for Large Enclosed Space ≥ 8000 ft² (If checked include the ENV-4C with submittal)

Phase of Construction: ☑ New Construction ☐ Addition ☐ Alteration

Approach of Compliance: ☐ Component ☑ Overall Envelope ☐ Unconditioned (file affidavit)

Front Orientation: N, E, S, W or in Degrees: 0 deg

FIELD INSPECTION ENERGY CHECKLIST

OPAQUE SURFACE DETAILS — **INSULATION**

Tag/ID	Assembly Type	Area (ft²)	Orientation N, E, S, W	U-Factor	Cavity R-Value	Exterior R-Value	Exterior Furring[1]	Interior R-Value	Interior Furring[1]	Joint Appendix 4	Condition Status	Pass	Fail[2]
1	Roof	55	(N)	0.031	R-30					4.2.1-A20	New	☐	☐
2	Wall	84	(N)	0.740	None					4.3.6-F5	New	☐	☐
3	Door	21	(N)	1.450	None					4.5.1-A1	New	☐	☐
4	Wall	140	(S)	0.740	None					4.3.6-F5	New	☐	☐
5	Wall	104	(W)	0.740	None					4.3.6-F5	New	☐	☐
6	Slab	269	(N)	0.730	None					4.4.7-A1	New	☐	☐
7	Slab	170	(N)	0.730	None					4.4.7-A1	New	☐	☐
8	Slab	175	(N)	0.730	None					4.4.7-A1	New	☐	☐
9	Roof	110	(N)	0.031	R-30					4.2.1-A20	New	☐	☐
10	Wall	58	(N)	0.740	None					4.3.6-F5	New	☐	☐

1. See Instructions in the Nonresidential Compliance Manual, page 3-96.
2. If Fail, then describe on Page 2 of the Inspection Checklist Form and take appropriate action to correct. A fail does not meet compliance.

FENESTRATION SURFACE DETAILS

Tag/ID	Fenestration Type	Area (ft²)	Orientation N, E, S, W	Max U-Factor	U-Factor Source	Max (R)SHGC	SHGC Source	Overhang	Conditions Status	Pass	Fail[1]
1	Window	192	(N)	0.370	NFRC	0.290	NFRC	☐	New	☐	☐
2	Window	68	(W)	0.370	NFRC	0.290	NFRC	☐	New	☐	☐
3	Window	79	(S)	0.370	NFRC	0.290	NFRC	☐	New	☐	☐
4	Window	36	(N)	1.190	Default	0.830	Default	☑	New	☐	☐
5	Window	110	(S)	1.190	Default	0.830	Default	☑	New	☐	☐
6	Window	36	(W)	1.190	Default	0.830	Default	☑	New	☐	☐
7	Window	48	(E)	0.370	NFRC	0.290	NFRC	☐	New	☐	☐
8	Window	56	(N)	1.190	Default	0.830	Default	☑	New	☐	☐
9	Window	56	(S)	1.190	Default	0.830	Default	☑	New	☐	☐
10	Window	84	(W)	1.190	Default	0.830	Default	☑	New	☐	☐

1. See Instructions in the Nonresidential Compliance Manual, page 3-96.
2. If Fail then describe on Page 2 of the Inspection Checklist Form and take appropriate action to correct. Verify building plans if necessary.

CERTIFICATE OF COMPLIANCE AND FIELD INSPECTION ENERGY CHECKLIST (Part 1 of 3) ENV-1C

Project Name: South Mission Beach Lifeguard Station | Date: 5/1/2014

Project Address	Climate Zone	Total Cond. Floor Area	Addition Floor Area
700 N. Jetty Rd. San Diego, CA	7	2,702	n/a

GENERAL INFORMATION

Building Type: ☑ Nonresidential ☐ High-Rise Residential ☐ Hotel/Motel Guest Room ☐ Schools (Public School) ☐ Relocatable Public School Bldg. ☑ Conditioned Spaces ☐ Unconditioned Spaces

☐ Skylight Area for Large Enclosed Space ≥ 8000 ft² (If checked include the ENV-4C with submittal)

Phase of Construction: ☑ New Construction ☐ Addition ☐ Alteration

Approach of Compliance: ☐ Component ☑ Overall Envelope ☐ Unconditioned (file affidavit)

Front Orientation: N, E, S, W or in Degrees: 0 deg

FIELD INSPECTION ENERGY CHECKLIST

OPAQUE SURFACE DETAILS — **INSULATION**

Tag/ID	Assembly Type	Area (ft²)	Orientation N, E, S, W	U-Factor	Cavity R-Value	Exterior R-Value	Exterior Furring[1]	Interior R-Value	Interior Furring[1]	Joint Appendix 4	Condition Status	Pass	Fail[2]
11	Door	42	(N)	1.450	None					4.5.1-A1	New	☐	☐
12	Wall	3	(S)	0.740	None					4.3.6-F5	New	☐	☐
13	Door	42	(S)	1.450	None					4.5.1-A1	New	☐	☐
14	Slab	239	(N)	0.730	None					4.4.7-A1	New	☐	☐
15	Roof	308	(N)	0.031	R-30					4.2.1-A20	New	☐	☐
16	Wall	210	(N)	0.740	None					4.3.6-F5	New	☐	☐
17	Wall	51	(E)	0.740	None					4.3.6-F5	New	☐	☐
18	Wall	51	(W)	0.740	None					4.3.6-F5	New	☐	☐
19	Slab	250	(N)	0.730	None					4.4.7-A1	New	☐	☐
20	Roof	308	(N)	0.031	R-30					4.2.1-A20	New	☐	☐

1. See Instructions in the Nonresidential Compliance Manual, page 3-96.
2. If Fail, then describe on Page 2 of the Inspection Checklist Form and take appropriate action to correct. A fail does not meet compliance.

FENESTRATION SURFACE DETAILS

Tag/ID	Fenestration Type	Area (ft²)	Orientation N, E, S, W	Max U-Factor	U-Factor Source	Max (R)SHGC	SHGC Source	Overhang	Conditions Status	Pass	Fail[1]
								☐		☐	☐
								☐		☐	☐
								☐		☐	☐
								☐		☐	☐
								☐		☐	☐
								☐		☐	☐
								☐		☐	☐
								☐		☐	☐
								☐		☐	☐
								☐		☐	☐

1. See Instructions in the Nonresidential Compliance Manual, page 3-96.
2. If Fail then describe on Page 2 of the Inspection Checklist Form and take appropriate action to correct. Verify building plans if necessary.

CERTIFICATE OF COMPLIANCE AND FIELD INSPECTION ENERGY CHECKLIST (Part 1 of 3) ENV-1C

Project Name: South Mission Beach Lifeguard Station | Date: 5/1/2014

Project Address	Climate Zone	Total Cond. Floor Area	Addition Floor Area
700 N. Jetty Rd. San Diego, CA	7	2,702	n/a

GENERAL INFORMATION

Building Type: ☑ Nonresidential ☐ High-Rise Residential ☐ Hotel/Motel Guest Room ☐ Schools (Public School) ☐ Relocatable Public School Bldg. ☑ Conditioned Spaces ☐ Unconditioned Spaces

☐ Skylight Area for Large Enclosed Space ≥ 8000 ft² (If checked include the ENV-4C with submittal)

Phase of Construction: ☑ New Construction ☐ Addition ☐ Alteration

Approach of Compliance: ☐ Component ☑ Overall Envelope ☐ Unconditioned (file affidavit)

Front Orientation: N, E, S, W or in Degrees: 0 deg

FIELD INSPECTION ENERGY CHECKLIST

OPAQUE SURFACE DETAILS — **INSULATION**

Tag/ID	Assembly Type	Area (ft²)	Orientation N, E, S, W	U-Factor	Cavity R-Value	Exterior R-Value	Exterior Furring[1]	Interior R-Value	Interior Furring[1]	Joint Appendix 4	Condition Status	Pass	Fail[2]
21	Wall	210	(S)	0.740	None					4.3.6-F5	New	☐	☐
22	Slab	250	(N)	0.730	None					4.4.7-A1	New	☐	☐
23	Roof	35	(N)	0.031	R-30					4.2.1-A20	New	☐	☐
24	Slab	35	(N)	0.730	None					4.4.7-A1	New	☐	☐
25	Roof	55	(N)	0.031	R-30					4.2.1-A20	New	☐	☐
26	Slab	55	(N)	0.730	None					4.4.7-A1	New	☐	☐
27	Slab	39	(N)	0.730	None					4.4.7-A1	New	☐	☐
28	Roof	70	(N)	0.031	R-30					4.2.1-A20	New	☐	☐
29	Wall	190	(N)	0.740	None					4.3.6-F5	New	☐	☐
30	Wall	196	(S)	0.740	None					4.3.6-F5	New	☐	☐

1. See Instructions in the Nonresidential Compliance Manual, page 3-96.
2. If Fail, then describe on Page 2 of the Inspection Checklist Form and take appropriate action to correct. A fail does not meet compliance.

FENESTRATION SURFACE DETAILS

Tag/ID	Fenestration Type	Area (ft²)	Orientation N, E, S, W	Max U-Factor	U-Factor Source	Max (R)SHGC	SHGC Source	Overhang	Conditions Status	Pass	Fail[1]
								☐		☐	☐
								☐		☐	☐
								☐		☐	☐
								☐		☐	☐
								☐		☐	☐
								☐		☐	☐
								☐		☐	☐
								☐		☐	☐
								☐		☐	☐
								☐		☐	☐

1. See Instructions in the Nonresidential Compliance Manual, page 3-96.
2. If Fail then describe on Page 2 of the Inspection Checklist Form and take appropriate action to correct. Verify building plans if necessary.

CERTIFICATE OF COMPLIANCE AND FIELD INSPECTION ENERGY CHECKLIST (Part 1 of 3) ENV-1C

Project Name: South Mission Beach Lifeguard Station | Date: 5/1/2014

Project Address	Climate Zone	Total Cond. Floor Area	Addition Floor Area
700 N. Jetty Rd. San Diego, CA	7	2,702	n/a

GENERAL INFORMATION

Building Type: ☑ Nonresidential ☐ High-Rise Residential ☐ Hotel/Motel Guest Room ☐ Schools (Public School) ☐ Relocatable Public School Bldg. ☑ Conditioned Spaces ☐ Unconditioned Spaces

☐ Skylight Area for Large Enclosed Space ≥ 8000 ft² (If checked include the ENV-4C with submittal)

Phase of Construction: ☑ New Construction ☐ Addition ☐ Alteration

Approach of Compliance: ☐ Component ☑ Overall Envelope ☐ Unconditioned (file affidavit)

Front Orientation: N, E, S, W or in Degrees: 0 deg

FIELD INSPECTION ENERGY CHECKLIST

OPAQUE SURFACE DETAILS — **INSULATION**

Tag/ID	Assembly Type	Area (ft²)	Orientation N, E, S, W	U-Factor	Cavity R-Value	Exterior R-Value	Exterior Furring[1]	Interior R-Value	Interior Furring[1]	Joint Appendix 4	Condition Status	Pass	Fail[2]
31	Wall	11	(W)	0.740	None					4.3.6-F5	New	☐	☐
32	Roof	55	(N)	0.031	R-30					4.2.1-A20	New	☐	☐
33	Roof	105	(N)	0.031	R-30					4.2.1-A20	New	☐	☐
34	Wall	21	(N)	0.740	None					4.3.6-F5	New	☐	☐
35	Wall	80	(E)	0.740	None					4.3.6-F5	New	☐	☐
36	Wall	11	(S)	0.740	None					4.3.6-F5	New	☐	☐
37	Roof	206	(N)	0.031	R-30					4.2.1-A20	New	☐	☐
38	Wall	205	(S)	0.740	None					4.3.6-F5	New	☐	☐
39	Roof	214	(N)	0.031	R-30					4.2.1-A20	New	☐	☐
40	Wall	234	(N)	0.740	None					4.3.6-F5	New	☐	☐

1. See Instructions in the Nonresidential Compliance Manual, page 3-96.
2. If Fail, then describe on Page 2 of the Inspection Checklist Form and take appropriate action to correct. A fail does not meet compliance.

FENESTRATION SURFACE DETAILS

Tag/ID	Fenestration Type	Area (ft²)	Orientation N, E, S, W	Max U-Factor	U-Factor Source	Max (R)SHGC	SHGC Source	Overhang	Conditions Status	Pass	Fail[1]
								☐		☐	☐
								☐		☐	☐
								☐		☐	☐
								☐		☐	☐
								☐		☐	☐
								☐		☐	☐
								☐		☐	☐
								☐		☐	☐
								☐		☐	☐
								☐		☐	☐

1. See Instructions in the Nonresidential Compliance Manual, page 3-96.
2. If Fail then describe on Page 2 of the Inspection Checklist Form and take appropriate action to correct. Verify building plans if necessary.

© COPYRIGHT October 07, 2014 at 2:59PM

M-E Engineers, Inc.
3760 Convoy St. Suite 340
San Diego CA 92111
t 858.565.3900 / f. 858.565.3906
www.me-engineers.com

REGISTERED PROFESSIONAL ENGINEER LAWRENCE A. BROOKS NO.M16665 MECHANICAL STATE OF CALIFORNIA 10/07/14

M-3

SPEC. NO. 8147

PLANS FOR THE CONSTRUCTION OF

South Mission Beach Lifeguard Station

San Diego, California

MECHANICAL TITLE 24 SHEETS | M0.3

CITY OF SAN DIEGO, CALIFORNIA
ENGINEERING & CAPITAL PROJECTS
ARCHITECTURAL ENGINEERING & CONTRACTS DIVISION
SHEET 68 OF 94 SHEETS

WBS: S-00791

APPROVED: _____ 10/13/2014
FOR CITY ENGINEER — DATE

SUBMITTED BY: JIHAD SLEIMAN, PROJECT MANAGER

DESCRIPTION	BY	APPROVED	DATE	FILMED
ORIGINAL	L A B			

YOUSIF BENYAMIN, PROJECT ENGINEER

218–1693 CCS27 COORDINATES

1858–6253 CCS83 COORDINATES

CONTRACTOR _____ DATE STARTED _____
INSPECTOR _____ DATE COMPLETED _____

32849–68–D

Proprietary design: These drawings and design are protected by common law copyright. All patentable material contained herein and originating with Dominy + Associates Architects @ domusstudio LLP shall be the property of Dominy + Associates Architects @ domusstudio LLP

© COPYRIGHT October 07, 2014 at 2:54PM

CERTIFICATE OF COMPLIANCE AND FIELD INSPECTION ENERGY CHECKLIST (Part 1 of 3) ENV-1C

Project Name	Date
South Mission Beach Lifeguard Station	5/1/2014

Project Address	Climate Zone	Total Cond. Floor Area	Addition Floor Area
700 N. Jetty Rd. San Diego, CA	7	2,702	n/a

GENERAL INFORMATION

Building Type: ☑ Nonresidential ☐ High-Rise Residential ☐ Hotel/Motel Guest Room
☐ Schools (Public School) ☐ Relocatable Public School Bldg. ☑ Conditioned Spaces ☐ Unconditioned Spaces
☐ Skylight Area for Large Enclosed Space ≥ 8000 ft² (If checked include the ENV-4C with submittal)
Phase of Construction: ☑ New Construction ☐ Addition ☐ Alteration
Approach of Compliance: ☐ Component ☑ Overall Envelope ☐ Unconditioned (file affidavit)
Front Orientation: N, E, S, W or in Degrees: 0 deg

FIELD INSPECTION ENERGY CHECKLIST

OPAQUE SURFACE DETAILS / **INSULATION**

Tag/ID	Assembly Type	Area (ft²)	Orientation N, E, S, W	U-Factor	Cavity R-Value	Exterior R-Value	Exterior Furring[3]	Interior R-Value	Interior Furring[3]	Joint Appendix 4	Condition Status	Pass	Fail[2]
41	Wall	69	(S)	0.740	None					4.3.6-F5	New	☐	☐
42	Wall	16	(W)	0.740	None					4.3.6-F5	New	☐	☐
43	Roof	149	(N)	0.031	R-30					4.2.1-A20	New	☐	☐
44	Wall	205	(S)	0.740	None					4.3.6-F5	New	☐	☐
												☐	☐
												☐	☐
												☐	☐
												☐	☐
												☐	☐
												☐	☐

1. See Instructions in the Nonresidential Compliance Manual, page 3-96.
2. If Fail, then describe on Page 2 of the Inspection Checklist Form and take appropriate action to correct. A fail does not meet compliance.

FENESTRATION SURFACE DETAILS

Tag/ID	Fenestration Type	Area (ft²)	Orientation N, E, S, W	Max U-Factor	U-Factor Source	Max (R)SHGC	SHGC Source	Overhang	Conditions Status	Pass	Fail[2]
								☐		☐	☐
								☐		☐	☐
								☐		☐	☐
								☐		☐	☐
								☐		☐	☐
								☐		☐	☐
								☐		☐	☐
								☐		☐	☐
								☐		☐	☐
								☐		☐	☐

1. See Instructions in the Nonresidential Compliance Manual, page 3-96.
2. If Fail then describe on Page 2 of the Inspection Checklist Form and take appropriate action to correct. Verify building plans if necessary.

CERTIFICATE OF COMPLIANCE AND FIELD INSPECTION ENERGY CHECKLIST (Part 2 of 3) ENV-1C

Project Name	Date
South Mission Beach Lifeguard Station	5/1/2014

ROOFING PRODUCT (COOL ROOFS)

(Note if the roofing product is not CRRC certified, this compliance approach cannot be used). Go to Overall Envelope Approach or Performance Approach.

CHECK APPLICABLE BOX BELOW IF EXEMPT FROM THE ROOFING PRODUCT "COOL ROOF" REQUIREMENTS:	Pass	Fail[1]	N/A
☐ Roofing compliance not required in Climate Zones 1 and16 with a Low-Sloped. 2:12 pitch or less.	☐	☐	☐
☐ Roofing compliance not required in Climate Zone 1 with a Steep-Sloped with less than 5 lb/ft². Greater than 2:12 pitch.	☐	☐	☐
☐ Low-sloped Wood framed roofs in Climate Zones 3 and 5 are exempted, solar reflectance and thermal emittance or SRI that have a U-factor of 0.039 or lower. See Opaque Surface Details roof assembly, Column H of ENV-2C.	☐	☐	☐
☐ Low-sloped Metal building roofs in Climate Zone 3 and 5 are exempted, solar relectance and thermal emittance or SRI that have a U-factor of 0.048 or lower. See Opaque Surface Details roof assembly below, Column H of ENV-2C.	☐	☐	☐
☐ The roof area covered by building integrated photovoltaic panels and building integrated solar thermal panels are exempted. Solar reflectance and thermal emittance or SRI, see spreadsheet calculator at www.energy.ca.gov/title24/	☐	☐	☐
☐ Roof constructions that have thermal mass over the roof membrane with a weight of at least 25 lb/ft² are exempt from the Cool Roof criteria below.	☐	☐	☐
☐ High-rise residential buildings and hotels and motels with low-sloped roofs in Climate Zones 1 through 9, 12 and 16 are exempted from the low-sloped roofing criteria.	☐	☐	☐

1. If Fail then describe on this page of the Inspection Checklist Form and take appropriate action to correct. Verify building plans if necessary.

CRRC Product ID Number[1]	Roof Slope ≤ 2:12	Roof Slope > 2:12	Product Weight < 5lb/ft²	Product Weight ≥ 5lb/ft²	Product Type[2]	Aged Solar Reflectance[3]		Thermal Emmitance	SRI[5]	Pass	Fail[6]
	☐	☐	☐	☐		☐ [4]				☐	☐
	☐	☐	☐	☐		☐ [4]				☐	☐
	☐	☐	☐	☐		☐ [4]				☐	☐
	☐	☐	☐	☐		☐ [4]				☐	☐
	☐	☐	☐	☐		☐ [4]				☐	☐
	☐	☐	☐	☐		☐ [4]				☐	☐

1. The CRRC Product ID Number can be obtained from the Cool Roof Rating Council's Rated Product Directory at www.coolroofs.org/products/search.php
2. Indicate the type of product is being used for the rool top, i.e. single-ply roof, asphalt roof, metal roof, etc.
3. If the Aged Reflectance is not available in the Cool Roof Rating Council's Rated Product Directory then use the Initial Reflectance value from the same directory and use the equation $(0.2+0.7(\rho_{initial} - 0.2)$ to obtain a calculated aged value. Where ρ is the Initial Solar Reflectance from the Cool Roof Rating Council's Rated Product Directory.
4. Check box if the Aged Reflactance is a calculated value using the equation above.
5. The SRI value needs to be calculated from a spreadsheet calculator at http://www.energy.ca.gov/title24/
6. If Fail then describe on this page of the Inspection Checklist Form and take appropriate action to correct. Verify building plans if necessary.

To apply **Liquid Field Applied Coatings**, the coating must be applied across the entire roof surface and meet the dry mil thickness or coverage recommended by the coatings manufacturer and meet minimum performance requirements listed in §118(i)4. Select the applicable coating:

☐ Aluminum-Pigmented Asphalt Roof Coating ☐ Cement-Based Roof Coating ☐ Other ____________

Discrepancies:

CERTIFICATE OF COMPLIANCE AND FIELD INSPECTION ENERGY CHECKLIST (Part 3 of 3) ENV-1C

Project Name	Date
South Mission Beach Lifeguard Station	5/1/2014

Required Acceptance Tests

Designer:
This form is to be used by the designer and attached to the plans. Listed below is the acceptance test for Envelope Fenestrations system. The designer is required to check the acceptance tests and list all the fenestration products that require an acceptance test. If all the site-built fenestration of a certain type requires a test, list the different fenestration products and the number of systems. The NA7 Section in the Appendix of the Nonresidential Reference Appendices Manual describes the test. Since this form will be part of the plans, completion of this section will allow the responsible party to budget for the scope of work appropriately.

Enforcement Agency:
Systems Acceptance. Before Occupancy Permit is granted for a newly constructed building or space or whenever new fenestration is installed in the building or space shall be certified as meeting the Acceptance Requirements. The ENV-2A form is not considered a complete form and is not to be accepted by the enforcement agency unless the boxes are checked and/or filled and signed. In addition, a Certificate of Acceptance forms shall be submitted to the enforcement agency that certifies plans, specifications, installation certificates, and operating and maintenance information meet the requirements of §10-103(b) of Title 24 Part 6. The field inspector must receive the properly filled out and signed forms before the building can receive final occupancy. A copy of the ENV-2A for each different fenestration product line must be provided to the owner of the building for their records.

Test Description: Fenestration Products Name or ID Requiring Testing or Verification	Area of like Products	ENV-2A Building Envelope Acceptance Test	Test Performed By:
Double Pane Glazing	407	☑	
Single Pane Glass	378	☑	
		☐	
		☐	
		☐	
		☐	
		☐	
		☐	
		☐	
		☐	
		☐	
		☐	
		☐	
		☐	
		☐	
		☐	
		☐	
		☐	
		☐	
		☐	
		☐	
		☐	
		☐	
		☐	
		☐	
		☐	

CERTIFICATE OF COMPLIANCE and FIELD INSPECTION ENERGY CHECKLIST (Part 1 of 4) MECH-1C

Project Name	Date
South Mission Beach Lifeguard Station	5/1/2014

Project Address	Climate Zone	Total Cond. Floor Area	Addition Floor Area
700 N. Jetty Rd. San Diego, CA	7	2,702	n/a

GENERAL INFORMATION

Building Type: ☑ Nonresidential ☐ High-Rise Residential ☐ Hotel/Motel Guest Room
☐ Schools (Public School) ☐ Relocatable Public School Bldg. ☑ Conditioned Spaces ☐ Unconditioned Spaces (affidavit)
Phase of Construction: ☑ New Construction ☐ Addition ☐ Alteration
Approach of Compliance: ☐ Component ☐ Overall Envelope TDV Energy ☐ Unconditioned (file affidavit)
Front Orientation: N, E, S, W or in Degrees: 0 deg

HVAC SYSTEM DETAILS — FIELD INSPECTION ENERGY CHECKLIST — Meets Criteria or Requirements

Equipment[2]	Inspection Criteria	Pass	Fail – Describe Reason[2]
Item or System Tags (i.e. AC-1, RTU-1, HP-1)	DHW Heater	☐	☐
Equipment Type[3]:	Electric Res DHW Boiler	☐	☐
Number of Systems	1	☐	☐
Max Allowed Heating Capacity[1]	15,358 Btu/hr	☐	☐
Minimum Heating Efficiency[1]	0.83 EF	☐	☐
Max Allowed Cooling Capacity[1]	n/a	☐	☐
Cooling Efficiency[1]	n/a	☐	☐
Duct Location/ R-Value	n/a	☐	☐
When duct testing is required, submit **MECH-4A** & **MECH-4-HERS**	n/a	☐	☐
Economizer	n/a	☐	☐
Thermostat	n/a	☐	☐
Fan Control	n/a	☐	☐

FIELD INSPECTION ENERGY CHECKLIST

Equipment[2]	Inspection Criteria	Pass	Fail – Describe Reason[2]
Item or System Tags (i.e. AC-1, RTU-1, HP-1)	FC-1 (First Floor)	☐	☐
Equipment Type[3]:	Split DX	☐	☐
Number of Systems	1	☐	☐
Max Allowed Heating Capacity[1]	19,700 Btu/hr	☐	☐
Minimum Heating Efficiency[1]	8.00 HSPF	☐	☐
Max Allowed Cooling Capacity[1]	17,900 Btu/hr	☐	☐
Cooling Efficiency[1]	14.0 SEER / 11.4 EER	☐	☐
Duct Location/ R-Value	Attic, Ceiling Ins, vented / 4.2	☐	☐
When duct testing is required, submit **MECH-4A** & **MECH-4-HERS**	No	☐	☐
Economizer	No Economizer	☐	☐
Thermostat	Setback Required	☐	☐
Fan Control	Constant Volume	☐	☐

1. If the Actual installed equipment performance efficiency and capacity is less than the Proposed (from the energy compliance submittal or from the building plans) the responsible party shall resubmit energy compliance to include the new changes.
2. For additional detailed discrepancy use Page 2 of the Inspection Checklist Form. Compliance fails if a Fail box is checked.
3. Indicate Equipment Type: Gas (Pkg or, Split), VAV, HP (Pkg or split), Hydronic, PTAC, or other.

CERTIFICATE OF COMPLIANCE and FIELD INSPECTION ENERGY CHECKLIST (Part 1 of 4) MECH-1C

Project Name	Date
South Mission Beach Lifeguard Station	5/1/2014

Project Address	Climate Zone	Total Cond. Floor Area	Addition Floor Area
700 N. Jetty Rd. San Diego, CA	7	2,702	n/a

GENERAL INFORMATION

Building Type: ☑ Nonresidential ☐ High-Rise Residential ☐ Hotel/Motel Guest Room
☐ Schools (Public School) ☐ Relocatable Public School Bldg. ☑ Conditioned Spaces ☐ Unconditioned Spaces (affidavit)
Phase of Construction: ☑ New Construction ☐ Addition ☐ Alteration
Approach of Compliance: ☐ Component ☐ Overall Envelope TDV Energy ☐ Unconditioned (file affidavit)
Front Orientation: N, E, S, W or in Degrees: 0 deg

HVAC SYSTEM DETAILS — FIELD INSPECTION ENERGY CHECKLIST — Meets Criteria or Requirements

Equipment[2]	Inspection Criteria	Pass	Fail – Describe Reason[2]
Item or System Tags (i.e. AC-1, RTU-1, HP-1)	RTU-1 (First Floor)	☐	☐
Equipment Type[3]:	Packaged DX	☐	☐
Number of Systems	1	☐	☐
Max Allowed Heating Capacity[1]	27,800 Btu/hr	☐	☐
Minimum Heating Efficiency[1]	7.70 HSPF	☐	☐
Max Allowed Cooling Capacity[1]	29,200 Btu/hr	☐	☐
Cooling Efficiency[1]	13.0 SEER / 11.3 EER	☐	☐
Duct Location/ R-Value	Attic, Ceiling Ins, vented / 4.2	☐	☐
When duct testing is required, submit **MECH-4A** & **MECH-4-HERS**	No	☐	☐
Economizer	No Economizer	☐	☐
Thermostat	Setback Required	☐	☐
Fan Control	Constant Volume	☐	☐

FIELD INSPECTION ENERGY CHECKLIST

Equipment[2]	Inspection Criteria	Pass	Fail – Describe Reason[2]
Item or System Tags (i.e. AC-1, RTU-1, HP-1)	RTU-2 (Second Floor)	☐	☐
Equipment Type[3]:	Packaged DX	☐	☐
Number of Systems	1	☐	☐
Max Allowed Heating Capacity[1]	53,000 Btu/hr	☐	☐
Minimum Heating Efficiency[1]	8.00 HSPF	☐	☐
Max Allowed Cooling Capacity[1]	50,700 Btu/hr	☐	☐
Cooling Efficiency[1]	14.0 SEER / 12.0 EER	☐	☐
Duct Location/ R-Value	Attic, Ceiling Ins, vented / 4.2	☐	☐
When duct testing is required, submit **MECH-4A** & **MECH-4-HERS**	No	☐	☐
Economizer	No Economizer	☐	☐
Thermostat	Setback Required	☐	☐
Fan Control	Constant Volume	☐	☐

1. If the Actual installed equipment performance efficiency and capacity is less than the Proposed (from the energy compliance submittal or from the building plans) the responsible party shall resubmit energy compliance to include the new changes.
2. For additional detailed discrepancy use Page 2 of the Inspection Checklist Form. Compliance fails if a Fail box is checked.
3. Indicate Equipment Type: Gas (Pkg or, Split), VAV, HP (Pkg or split), Hydronic, PTAC, or other.

CERTIFICATE OF COMPLIANCE and FIELD INSPECTION ENERGY CHECKLIST (Part 2 of 4) MECH-1C

Project Name	Date
South Mission Beach Lifeguard Station	5/1/2014

Discrepancies:

CERTIFICATE OF COMPLIANCE and FIELD INSPECTION ENERGY CHECKLIST (Part 3 of 4) MECH-1C

Project Name	Date
South Mission Beach Lifeguard Station	5/1/2014

Required Acceptance Tests

Designer:
This form is to be used by the designer and attached to the plans. Listed below are all the acceptance tests for mechanical systems. The designer is required to check the applicable boxes by all acceptance tests that apply and listed all equipment that requires an acceptance test. If all equipment of a certain type requires a test, list the equipment description and the number of systems. The NA number designates the Section in the Appendix of the Nonresidential Reference Appendices Manual that describes the test. Since this form will be part of the plans, completion of this section will allow the responsible party to budget for the scope of work appropriately.

Building Departments:
Systems Acceptance: Before occupancy permit is granted for a newly constructed building or space, or a new space-conditioning system serving a building or space is operated for normal use, all control devices serving the building or space shall be certified as meeting the Acceptance Requirements for Code Compliance.
Systems Acceptance: Before occupancy permit is granted. All newly installed HVAC equipment must be tested using the Acceptance Requirements.

The MECH-1C form is not considered a completed form and is not to be accepted by the building department unless the correct boxes are checked. The equipment requiring testing, person performing the test (Example: HVAC installer, TAB contractor, controls contractor, PE in charge of project) and what Acceptance test must be conducted. The following checked-off forms are required for **ALL** newly installed equipment. In addition a Certificate of Acceptance forms shall be submitted to the building department that certifies plans, specifications, installation, certificates, and operating and maintenance information meet the requirements of §10-103(b) and Title-24 Part 6. The building inspector must receive the properly filled out and signed forms before the building can receive final occupancy.

TEST DESCRIPTION: Equipment Requiring Testing or Verification	Qty.	MECH-2A Outdoor Ventilation For VAV & CAV	MECH-3A Constant Volume & Single-Zone Unitary	MECH-4A Air Distribution Ducts	MECH-5A Economizer Controls	MECH-6A Demand Control Ventilation DCV	MECH-7A Supply Fan VAV	MECH-8A Valve Leakage Test	MECH-9A Supply Water Temp. Reset	MECH-10A Hydronic System Variable Flow Control	MECH-11A Automatic Demand Shed Control
FC-1/CU-1	1	☐	☑	☐	☐	☐	☐	☐	☐	☐	☐
RTU-1	1	☐	☑	☐	☐	☐	☐	☐	☐	☐	☐
RTU-2 B6HQ060	1	☐	☑	☐	☐	☐	☐	☐	☐	☐	☐
		☐	☐	☐	☐	☐	☐	☐	☐	☐	☐
		☐	☐	☐	☐	☐	☐	☐	☐	☐	☐
		☐	☐	☐	☐	☐	☐	☐	☐	☐	☐
		☐	☐	☐	☐	☐	☐	☐	☐	☐	☐
		☐	☐	☐	☐	☐	☐	☐	☐	☐	☐
		☐	☐	☐	☐	☐	☐	☐	☐	☐	☐
		☐	☐	☐	☐	☐	☐	☐	☐	☐	☐
		☐	☐	☐	☐	☐	☐	☐	☐	☐	☐
		☐	☐	☐	☐	☐	☐	☐	☐	☐	☐

South Mission Beach Lifeguard Station
San Diego, California

M–4

SPEC. NO. 8147

M-E Engineers, Inc.
3760 Convoy St. Suite 340
San Diego CA 92111
t. 858.565.3900 / f. 858.565.3906
www.me-engineers.com

REGISTERED PROFESSIONAL ENGINEER LAWRENCE A. BROOKS NO.M16665 MECHANICAL STATE OF CALIFORNIA 10/07/14

PLANS FOR THE CONSTRUCTION OF
South Mission Beach Lifeguard Station

MECHANICAL TITLE 24 SHEETS — M0.4

CITY OF SAN DIEGO, CALIFORNIA
ENGINEERING & CAPITAL PROJECTS
ARCHITECTURAL ENGINEERING & CONTRACTS DIVISION
SHEET 69 OF 94 SHEETS

WBS S-00791

APPROVED: [signature] FOR CITY ENGINEER — DATE 10/13/2014

SUBMITTED BY: JIHAD SLEIMAN, PROJECT MANAGER
YOUSIF BENYAMIN, PROJECT ENGINEER

DESCRIPTION	BY	APPROVED	DATE	FILMED
ORIGINAL	L A B			

218–1693 CCS27 COORDINATES
1858–6253 CCS83 COORDINATES

CONTRACTOR ____ DATE STARTED ____
INSPECTOR ____ DATE COMPLETED ____

32849–69–D

Proprietary design: These drawings and design are protected by common law copyright. All patentable material contained herein and originating with Dominy + Associates Architects @ domusstudio LLP shall be the property of Dominy + Associates Architects @ domusstudio LLP

© COPYRIGHT October 07, 2014 at 2:31PM

CERTIFICATE OF COMPLIANCE and FIELD INSPECTION ENERGY CHECKLIST (Part 4 of 4) MECH-1C

Project Name: *South Mission Beach Lifeguard Station* — Date: *5/1/2014*

TEST DESCRIPTION: Equipment Requiring Testing	Qty.	MECH-12A Fault Detection & Diagnostics for DX Units	MECH-13A Automatic Fault Detection & Diagnostics for Air & Zone	MECH-14A Distributed Energy Storage DX AC Systems	MECH-15A Thermal Energy Storage (TES) Systems	Test Performed By:
FC-1/CU-1	1	☐	☐	☐	☐	
RTU-1	1	☐	☐	☐	☐	
RTU-2 B6HQ060	1	☐	☐	☐	☐	

AIR SYSTEM REQUIREMENTS (Part 1 of 2) MECH-2C

Project Name: *South Mission Beach Lifeguard Station* — Date: *5/1/2014*

Item or System Tags (i.e. AC-1, RTU-1, HP-1)		FC-1 (First Floor)	RTU-1 (First Floor)	RTU-2 (Second Floor)
Number of Systems		1	1	1
MANDATORY MEASURES	**T-24 Sections**			
Heating Equipment Efficiency	112(a)	8.00 HSPF	7.70 HSPF	8.00 HSPF
Cooling Equipment Efficiency	112(a)	14.0 SEER / 11.4 EER	13.0 SEER / 11.3 EER	14.0 SEER / 12.0 EER
HVAC Heat Pump Thermostat	112(b), 112(c)	Yes	Yes	Yes
Furnace Controls/Thermostat	112(c), 115(a)	n/a	n/a	n/a
Natural Ventilation	121(b)	Yes	Yes	Yes
Mechanical Ventilation	121(b)	75 cfm	579 cfm	90 cfm
VAV Minimum Position Control	121(c)	No	No	No
Demand Control Ventilation	121(c)	No	No	No
Time Control	122(e)	Programmable Switch	Programmable Switch	Programmable Switch
Setback and Setup Control	122(e)	Setback Required	Setback Required	Setback Required
Outdoor Damper Control	122(f)	Auto	Auto	Auto
Isolation Zones	122(g)	n/a	n/a	n/a
Pipe Insulation	123			
Duct Location/ R-value	124	Attic, Ceiling Ins, vented / 4.2	Attic, Ceiling Ins, vented / 4.2	Attic, Ceiling Ins, vented / 4.2
PRESCRIPTIVE MEASURES				
Calculated Design Heating Load	144(a & b)	n/a	n/a	n/a
Proposed Heating Capacity	144(a & b)	16,491 Btu/hr	23,272 Btu/hr	44,367 Btu/hr
Calculated Design Cooling Load	144(a & b)	n/a	n/a	n/a
Proposed Cooling Capacity	144(a & b)	16,607 Btu/hr	21,398 Btu/hr	48,414 Btu/hr
Fan Control	144(c)	Constant Volume	Constant Volume	Constant Volume
DP Sensor Location	144(c)			
Supply Pressure Reset (DDC only)	144(c)	Yes	Yes	Yes
Simultaneous Heat/Cool	144(d)	No	No	No
Economizer	144(e)	No Economizer	No Economizer	No Economizer
Heat Air Supply Reset	144(f)	Constant Temp	Constant Temp	Constant Temp
Cool Air Supply Reset	144(f)	Constant Temp	Constant Temp	Constant Temp
Electric Resistance Heating[1]	144(g)			
Air Cooled Chiller Limitation	144(i)			
Duct Leakage Sealing. If Yes, a MECH-4-A must be submitted	144(k)	No	No	No

(Header rows: "Indicate Air Systems Type (Central, Single Zone, Package, VAV, or etc...)"; "Indicate Page Reference on Plans or Schedule and indicate the applicable exception(s)")

1. Total installed capacity (MBtu/hr) of all electric heat on this project exclusive of electric auxiliary heat for heat pumps. If electric heat is used explain which exception(s) to §144(g) apply.

WATER SIDE SYSTEM REQUIREMENTS (Part 2 of 2) MECH-2C

Project Name: *South Mission Beach Lifeguard Station* — Date: *5/1/2014*

WATER[2] SIDE SYSTEMS: Chillers, Towers, Boilers, Hydronic Loops

Item or System Tags (i.e. AC-1, RTU-1, HP-1)[1]				
Number of Systems				
MANDATORY MEASURES	**T-24 Sections**	Indicate Page Reference on Plans or Specification[2]		
Equipment Efficiency	112(a)			
Pipe Insulation	123			
PRESCRIPTIVE MEASURES				
Cooling Tower Fan Controls	144(a & b)			
Cooling Tower Flow Controls	144(h)			
Variable Flow System Design	144(h)			
Chiller and Boiler Isolation	144(j)			
CHW and HHW Reset Controls	144(j)			
WLHP Isolation Valves	144(j)			
VSD on CHW, CW & WLHP Pumps>5HP	144(j)			
DP Sensor Location	144(j)			

1. The proposed equipment need to match the building plans schedule or specifications. If a requirement is not applicable, put "N/A" in the column next to applicable section.
2. For each chiller, cooling tower, boiler, and hydronic loop (or groups of similar equipment) fill in the reference to sheet number and/or specification section and paragraph number where the required features are documented. If a requirement is not applicable, put "N/A" in the column next to applicable section.

Service Hot Water, Pool Heating

Item or System Tags (i.e. WH-1, WHP, DHW, etc...)[1]		DHW Heater		
Number of Systems		1		
MANDATORY MEASURES	**T-24 Sections**	Indicate Page Reference on Plans or Schedule[2]		
SERVICE HOT WATER				
Certified Water Heater	111, 113(a)	A O Smith DRE-12		
Water Heater Efficiency	113(b)	0.83 EF		
Service Water Heating Installation	113(c)	Controls Req.		
Pipe Insulation	123	Required		
POOL AND SPA				
Pool and Spa Efficiency and Control	114(a)	n/a		
Pool and Spa Installation	114(b)	n/a		
Pool Heater – No Pilot Light	115(c)	n/a		
Spa Heater – No Pilot Light	115(d)	n/a		
Pipe Insulation	123	n/a		

1. The Proposed equipment needs to match the building plans schedule or specifications. If a requirement is not applicable, put "N/A" in the column next to applicable section.
2. For each water heater, pool heater and domestic water loop (or groups of similar equipment) fill in the reference to sheet number and/or specification section and paragraph number where the required features are documented. If a requirement is not applicable, put "N/A" in the column.

MECHANICAL VENTILATION AND REHEAT MECH-3C

Project Name: *South Mission Beach Lifeguard Station* — Date: *5/1/2014*

MECHANICAL VENTILATION (§121(b)2): AREA BASIS (B–D), OCCUPANCY BASIS (E–G); REHEAT LIMITATION (§144(d)): VAV MINIMUM (J–M)

A Zone/System	B Condition Area (ft²)	C CFM per ft²	D Min CFM By Area B X C	E Number Of People	F CFM per Person	G Min CFM by Occupant E X F	H REQ'D V.A. Max of D or G	I Design Ventilation Air CFM	J 50% of Design Zone Supply CFM	K B X 0.4 CFM / ft²	L Max. of Columns H, J, K, 300 CFM	M Design Minimum Air Setpoint	N Transfer Air
First Aid Room	283	0.15	42	3.0	15.0	45	45	45					
Support	518	0.15	78	2.0	15.0	30	78	30					47
FC-1 (First Floor)						Total	123	75					
Reception	260	0.15	39	3.3	15.0	49	49	49					
Locker Room	616	0.15	92	10.0	50.0	500	500	500					
Support	129	0.15	19	2.0	15.0	30	30	30					
RTU-1 (First Floor)						Total	579	579					
Ready Room	276	0.15	41				41	30					11
Restroom	55	0.15	8				8	0					8
Admin	105	0.15	16				16	15					
Stairs	206	0.15	31				31	0					31
Observation Level	214	0.15	32				32	30					2
Storage	40	0.15	6				6	15					
RTU-2 (Second Floor)						Total	134	90					
			Totals						Column I Total Design Ventilation Air				

- C — Minimum ventilation rate per Section §121, Table 121-A.
- E — Based on fixed seat or the greater of the expected number of occupants and 50% of the CBC occupant load for egress purposes for spaces without fixed seating.
- H — Required Ventilation Air (REQ'D V.A.) is the larger of the ventilation rates calculated on an AREA BASIS or OCCUPANCY BASIS (Column D or G).
- I — Must be greater than or equal to H, or use Transfer Air (column N) to make up the difference.
- J — Design fan supply CFM (Fan CFM) x 50%; or the design zone outdoor airflow rate per §121.
- K — Condition area (ft²) x 0.4 CFM / ft²; or
- L — Maximum of Columns H, J, K, or 300 CFM
- M — This must be less than or equal to Column L and greater than or equal to the sum of Columns H plus N.
- N — Transfer Air must be provided where the Required Ventilation Air (Column H) is greater than the Design Minimum Air (Column M). Where required, transfer air must be greater than or equal to the difference between the Required Ventilation Air (Column H) and the Design Minimum Air (Column M), Column H minus M.

MECHANICAL EQUIPMENT DETAILS (Part 1 of 2) MECH-5C

Project Name: *South Mission Beach Lifeguard Station* — Date: *5/1/2014*

CHILLER AND TOWER SUMMARY

Equipment Name	Type	Qty.	Efficiency	Tons	PUMPS Qty.	PUMPS GPM	PUMPS BHP	PUMPS Pump Control

DHW / BOILER SUMMARY

System Name	Type	Distribution	Qty.	Rated Input	Vol. (Gals).	Energy Factor or RE	Standby Loss or Pilot	Tank Ext. R-Value	Status
A O Smith DRE-12	Small Elec.	Kitchen Pipe Ins	1	15,358	119	0.83	n/a	n/a	New

MULTI-FAMILY CENTRAL WATER HEATING DETAILS

Control	Hot Water Pump Qty.	Hot Water Pump HP	Type	Hot Water Piping Length (ft) In Plenum	Outside	Buried	Add ½" Insulation
							☐
							☐
							☐

CENTRAL SYSTEM RATINGS

System Name	Type	Qty.	HEATING Output	HEATING Aux. kW	HEATING Efficiency	COOLING Output	COOLING Efficiency	Status
FC-1/CU-1	Split DX	1	19,700	0.0	8.00 HSPF	17,900	14.0 SEER / 11.4 EER	New
RTU-1	Packaged DX	1	27,800	0.0	7.70 HSPF	29,200	13.0 SEER / 11.3 EER	New
RTU-2 B6HQ060	Packaged DX	1	53,000	0.0	8.00 HSPF	50,700	14.0 SEER / 12.0 EER	New

CENTRAL SYSTEM FAN SUMMARY

System Name	Fan Type	Economizer Type	SUPPLY FAN CFM	SUPPLY FAN BHP	RETURN FAN CFM	RETURN FAN BHP
FC-1/CU-1	Constant Volume	No Economizer	450	0.30	none	
RTU-1	Constant Volume	No Economizer	900	0.50	none	
RTU-2 B6HQ060	Constant Volume	No Economizer	2,000	0.90	none	

ENVELOPE MANDATORY MEASURES: NONRESIDENTIAL ENV-MM

Project Name: *South Mission Beach Lifeguard Station* — Date: *5/1/2014*

DESCRIPTION

Building Envelope Measures:

§118(a):	Installed insulating material shall have been certified by the manufacturer to comply with the California Quality Standards for insulating material, Title 20 Chapter 4, Article 3.
§118(c):	All Insulating Materials shall be installed in compliance with the flame spread rating and smoke density requirements of Sections 2602 and 707 of Title 24, Part 2.
§118(f):	The opaque portions of framed demising walls in nonresidential buildings shall have insulation with an installed R-value of no less than R-13 between framing members.
§117(a):	All Exterior Joints and openings in the building that are observable sources of air leakage shall be caulked, gasketed, weatherstripped or otherwise sealed.
§116(a) 1:	Manufactured fenestration products and exterior doors shall have air infiltration rates not exceeding 0.3 cfm/ft.² of window area, 0.3 cfm/ft.² of door area for residential doors, 0.3 cfm/ft.² of door area for nonresidential single doors (swinging and sliding), and 1.0 cfm/ft.² for nonresidential double doors (swinging).
§116(a) 2:	Fenestration U-factor shall be rated in accordance with NFRC 100, or the applicable default U-factor.
§116(a) 3:	Fenestration SHGC shall be rated in accordance with NFRC 200, or NFRC 100 for site-built fenestration, or the applicable default SHGC.
§116(b):	Site Constructed Doors, Windows and Skylights shall be caulked between the unit and the building, and shall be weatherstripped (except for unframed glass doors and fire doors).

MECHANICAL MANDATORY MEASURES: NONRESIDENTIAL MECH-MM

Project Name: *South Mission Beach Lifeguard Station* — Date: *5/1/2014*

Equipment and System Efficiencies

§111:	Any appliance for which there is a California standard established in the Appliance Efficiency Regulations will comply with the applicable standard.
§115(a):	Fan type central furnaces shall not have a pilot light.
§123:	Piping, except that conveying fluids at temperatures between 60 and 105 degrees Fahrenheit, or within HVAC equipment, shall be insulated in accordance with Standards Section 123.
§124:	Air handling duct systems shall be installed and insulated in compliance with Sections 601, 602, 603, 604, and 605 of the CMC Standards.

Controls

§122(e):	Each space conditioning system shall be installed with one of the following:
1A.	Each space conditioning system serving building types such as offices and manufacturing facilities (and all others not explicitly exempt from the requirements of Section 112 (d)) shall be installed with an automatic time switch with an accessible manual override that allows operation of the system during off-hours for up to 4 hours. The time switch shall be capable of programming different schedules for weekdays and weekends and have program backup capabilities that prevent the loss of the device's program and time setting for at least 10 hours if power is interrupted; or
1B.	An occupancy sensor to control the operating period of the system; or
1C.	A 4-hour timer that can be manually operated to control the operating period of the system.
2.	Each space conditioning system shall be installed with controls that temporarily restart and temporarily operate the system as required to maintain a setback heating and/or a setup cooling thermostat setpoint.
§122(g):	Each space conditioning system serving multiple zones with a combined conditioned floor area more than 25,000 square feet shall be provided with isolation zones. Each zone: shall not exceed 25,000 square feet; shall be provided with isolation devices, such as valves or dampers that allow the supply of heating or cooling to be setback or shut off independently of other isolation areas; and shall be controlled by a time control device as described above.
§122(c):	Thermostats shall have numeric setpoints in degrees Fahrenheit (F) and adjustable setpoint stops accessible only to authorized personnel.
§122(b):	Heat pumps shall be installed with controls to prevent electric resistance supplementary heater operation when the heating load can be met by the heat pump alone
§122(a&b):	Each space conditioning system shall be controlled by an individual thermostat that responds to temperature within the zone. Where used to control heating, the control shall be adjustable down to 55 degrees F or lower. For cooling, the control shall be adjustable up to 85 degrees F or higher. Where used for both heating and cooling, the control shall be capable of providing a deadband of at least 5 degrees F within which the supply of heating and cooling is shut off or reduced to a minimum.

Ventilation

§121(e):	Controls shall be provided to allow outside air dampers or devices to be operated at the ventilation rates as specified on these plans.
§122(f):	All gravity ventilating systems shall be provided with automatic or readily accessible manually operated dampers in all openings to the outside, except for combustion air openings.
§121(f):	Ventilation System Acceptance. Before an occupancy permit is granted for a newly constructed building or space, or a new ventilating system serving a building or space is operated for normal use, all ventilation systems serving the building or space shall be certified as meeting the Acceptance Requirements for Code Compliance

Service Water Heating Systems

§113(c)	Installation
3.	Temperature controls for public lavatories. The controls shall limit the outlet Temperature to 110°F.
2.	Circulating service water-heating systems shall have a control capable of automatically turning off the circulating pump when hot water is not required.

South Mission Beach Lifeguard Station
San Diego, California

M–5

SPEC. NO. 8147

M-E Engineers, Inc.
3760 Convoy St. Suite 340
San Diego CA 92111
t. 858.565.3900 / f. 858.565.3906
www.me-engineers.com

REGISTERED PROFESSIONAL ENGINEER LAWRENCE A. BROOKS NO.M16665 MECHANICAL STATE OF CALIFORNIA 10/07/14

PLANS FOR THE CONSTRUCTION OF
South Mission Beach Lifeguard Station

MECHANICAL TITLE 24 SHEETS — M0.5

CITY OF SAN DIEGO, CALIFORNIA
ENGINEERING & CAPITAL PROJECTS
ARCHITECTURAL ENGINEERING & CONTRACTS DIVISION
SHEET 70 OF 94 SHEETS

WBS S-00791

APPROVED: [signature] FOR CITY ENGINEER — DATE 10/13/2014

DESCRIPTION	BY	APPROVED	DATE	FILMED
ORIGINAL	L A B			

SUBMITTED BY: JIHAD SLEIMAN, PROJECT MANAGER
YOUSIF BENYAMIN, PROJECT ENGINEER
218–1693 CCS27 COORDINATES
1858–6253 CCS83 COORDINATES

CONTRACTOR ______ DATE STARTED ______
INSPECTOR ______ DATE COMPLETED ______

32849–70–D

Proprietary design: These drawings and design are protected by common law copyright. All patentable material contained herein and originating with Dominy + Associates Architects @ domusstudio LLP shall be the property of Dominy + Associates Architects @ domusstudio LLP

© COPYRIGHT October 07, 2014 at 2:30PM

KEY NOTES

1. 8x6 EXHAUST DUCT UP THROUGH ROOF.
2. PROVIDE 0.28 S.F. FREE AREA (MINIMUM) DOOR INTAKE LOUVER.
3. 10x8 EXHAUST DUCT UP THROUGH ROOF.
4. PROVIDE 0.14 S.F. FREE AREA (MINIMUM) EXHAUST LOUVER.
5. PROVIDE 0.44 S.F. FREE AREA (MINIMUM) DOOR INTAKE LOUVER.
6. PROVIDE 0.30 S.F. FREE AREA (MINIMUM) INTAKE LOUVER.
7. 16"x16" SUPPLY AIR DUCT UP THRU ROOF TO SF-1.
8. 8x8 EXHAUST DUCT UP THRU ROOF.
9. 20x10 RETURN DUCT DOWN FROM RTU-1.
10. SEE DETAIL 3/M4.2. PROVIDE 18x24 ACCESS PANEL.
11. 4" RIGID METAL DRYER VENT WITH A TOTAL DUCT RUN NOT TO EXCEED 12'-0" AND MAXIMUM OF THREE (3) ELBOWS.
12. 20x10 SUPPLY DUCT DOWN FROM RTU-1.
13. SEE DETAIL 4/M4.2.
14. SEE DETAIL 4/M4.1.
15. SEE DETAIL 6/M4.1.
16. SEE DETAIL 8/M4.1.
17. SEE DETAIL 2/M4.1.
18. 4 SQUARE FEET NET FREE AREA WALL LOUVERS. SEE ARCHITECTURAL DRAWINGS.

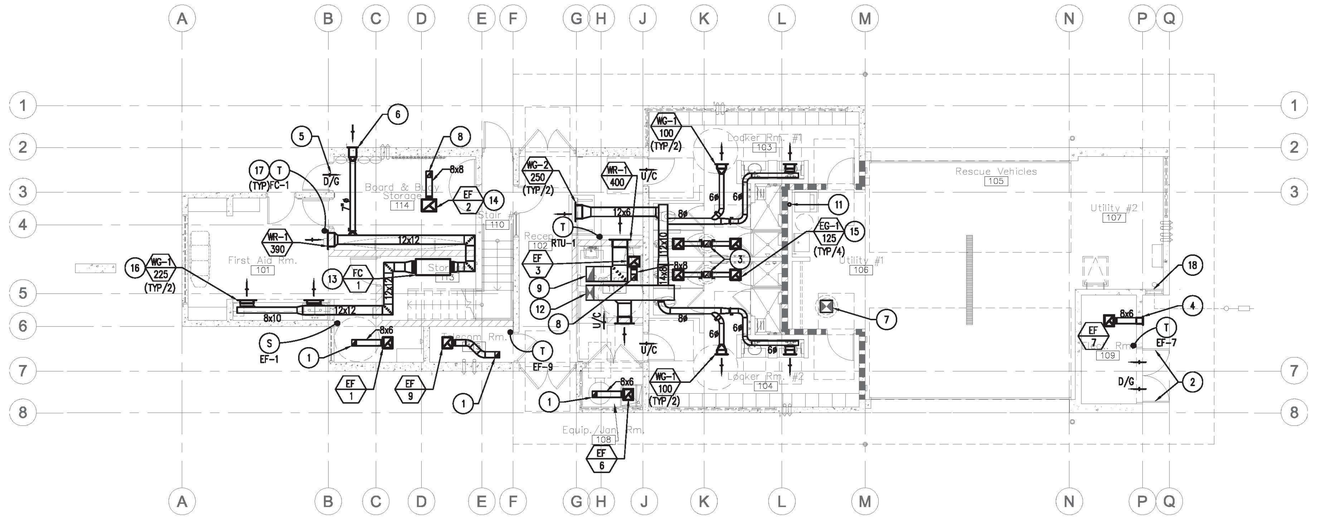

FIRST FLOOR MECHANICAL PLAN

SCALE: _" = 1'-0"

M-6

SPEC. NO. 8147

me engineers
M-E Engineers, Inc.
3760 Convoy St. Suite 340
San Diego CA 92111
t. 858.565.3900 / f. 858.565.3906
www.me-engineers.com

REGISTERED PROFESSIONAL ENGINEER LAWRENCE A. BROOKS NO.M16665 MECHANICAL STATE OF CALIFORNIA
10/07/14

PLANS FOR THE CONSTRUCTION OF

South Mission Beach Lifeguard Station

FIRST FLOOR MECHANICAL PLAN — M1.1

CITY OF SAN DIEGO, CALIFORNIA
ENGINEERING & CAPITAL PROJECTS
ARCHITECTURAL ENGINEERING & CONTRACTS DIVISION
SHEET 71 OF 94 SHEETS

WBS S-00791

APPROVED: FOR CITY ENGINEER — DATE 10/13/2014

SUBMITTED BY: JIHAD SLEIMAN, PROJECT MANAGER

DESCRIPTION	BY	APPROVED	DATE	FILMED
ORIGINAL	L A B			

YOUSIF BENYAMIN, PROJECT ENGINEER

218-1693 CCS27 COORDINATES

1858-6253 CCS83 COORDINATES

CONTRACTOR _____ DATE STARTED _____
INSPECTOR _____ DATE COMPLETED _____

32849-71-D

South Mission Beach Lifeguard Station
San Diego, California

Proprietary design: These drawings and design are protected by common law copyright. All patentable material contained herein and originating with Dominy + Associates Architects @ domuseastudio LLP shall be the property of Dominy + Associates Architects @ domuseastudio LLP

© COPYRIGHT October 07, 2014 at 2:28PM

KEY NOTES

1. 6ø EXHAUST DUCT UP TO 3RD FLOOR.
2. PROVIDE 10'–0" CLEARANCE FROM ANY EXHAUST.
3. 8x6 EXHAUST DUCT UP THROUGH ROOF. SEE DETAIL 2/M4.2.
4. 8x8 EXHAUST DUCT UP THROUGH ROOF. SEE DETAIL 2/M4.2.
5. 20x10 RETURN DUCT UP THROUGH SHAFT.
6. 20x10 SUPPLY DUCT UP THROUGH SHAFT.
7. 20x12 RETURN AIR DUCT UP THROUGH ROOF TO RTU–2.
8. 20x12 SUPPLY AIR DUCT UP THROUGH ROOF TO RTU–2. PROVIDE DUCT TRANSITION AS NECESSARY TO AVOID OBSTRUCTIONS.
9. 15x15 RETURN AIR DUCT UP THROUGH ROOF TO RTU–1.
10. 15x15 SUPPLY AIR DUCT UP THROUGH ROOF TO RTU–1.
11. SEE DETAIL 6/M4.2.
12. CLOTHES DRYER EXHAUST. PROVIDE GOOSENECK.

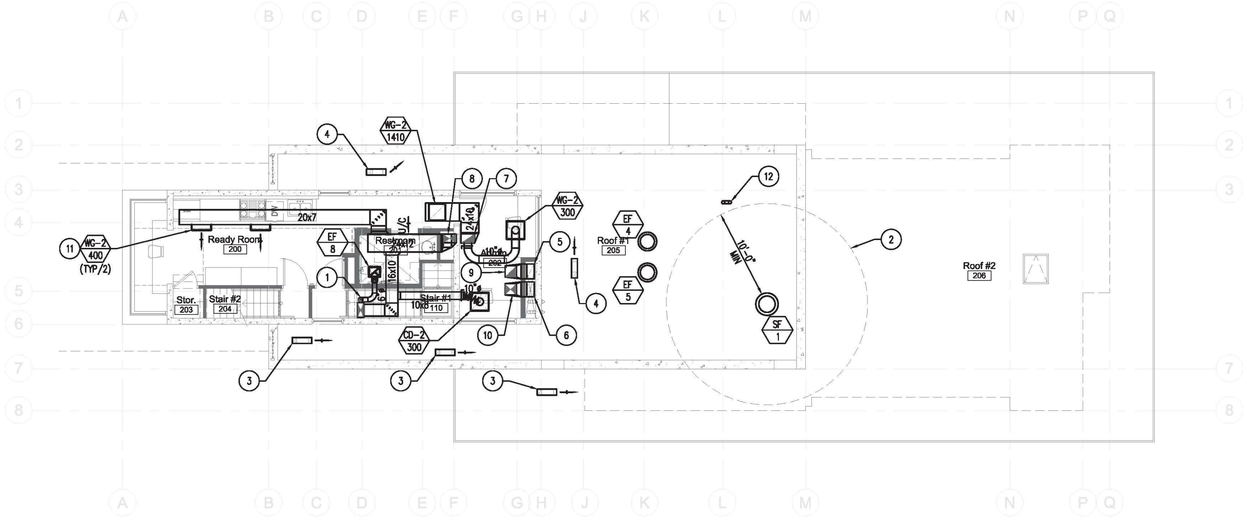

SECOND FLOOR AND ROOF MECHANICAL PLAN

SCALE: 1/8" = 1'–0"

South Mission Beach Lifeguard Station
San Diego, California

M–7

me engineers
M-E Engineers, Inc.
3760 Convoy St. Suite 340
San Diego CA 92111
t. 858.565.3900 / f. 858.565.3906
www.me-engineers.com

SPEC. NO. 8147

REGISTERED PROFESSIONAL ENGINEER
LAWRENCE A. BROOKS
NO.M16885
MECHANICAL
STATE OF CALIFORNIA
10/07/14

PLANS FOR THE CONSTRUCTION OF

South Mission Beach Lifeguard Station

SECOND FLOOR & ROOF MECHANICAL PLAN — M1.2

CITY OF SAN DIEGO, CALIFORNIA
ENGINEERING & CAPITAL PROJECTS
ARCHITECTURAL ENGINEERING & CONTRACTS DIVISION
SHEET 72 OF 94 SHEETS

WBS S-00791

APPROVED
FOR CITY ENGINEER — DATE 10/13/2014

SUBMITTED BY:
JIHAD SLEIMAN
PROJECT MANAGER

DESCRIPTION	BY	APPROVED	DATE	FILMED
ORIGINAL	L A B			

YOUSIF BENYAMIN
PROJECT ENGINEER

218–1693
CCS27 COORDINATES

1858–6253
CCS83 COORDINATES

CONTRACTOR _____ DATE STARTED _____
INSPECTOR _____ DATE COMPLETED _____

32849–72–D

Proprietary design: These drawings and design are protected by common law copyright. All patentable material contained herein and originating with Dominy + Associates Architects @ domusstudio LLP shall be the property of Dominy + Associates Architects @ domusstudio LLP

© COPYRIGHT October 07, 2014 at 2:26PM

KEY NOTES

1. PROVIDE ONE-WAY THROW. AIR DIRECTION AS SHOWN ON PLANS.
2. 6x6 EXHAUST GRILLE. MAINTAIN 10'-0" DISTANCE FROM THE OUTSIDE AIR INTAKE.
3. 20x8 SUPPLY AIR DUCT DOWN TO SECOND FLOOR. SEE SHEET M1.2 FOR CONTINUATION.
4. ROUTE SUPPLY AIR DUCT IN SOFFIT. REFER TO ARCHITECTURAL PLANS.
5. SUPPLY AIR DUCT RISE UP BETWEEN JOISTS. REFER TO ARCHITECTURAL AND STRUCTURAL PLANS.
6. 6"ø EXHAUST DUCT DOWN TO SECOND FLOOR. SEE SHEET M1.2 FOR CONTINUATION.

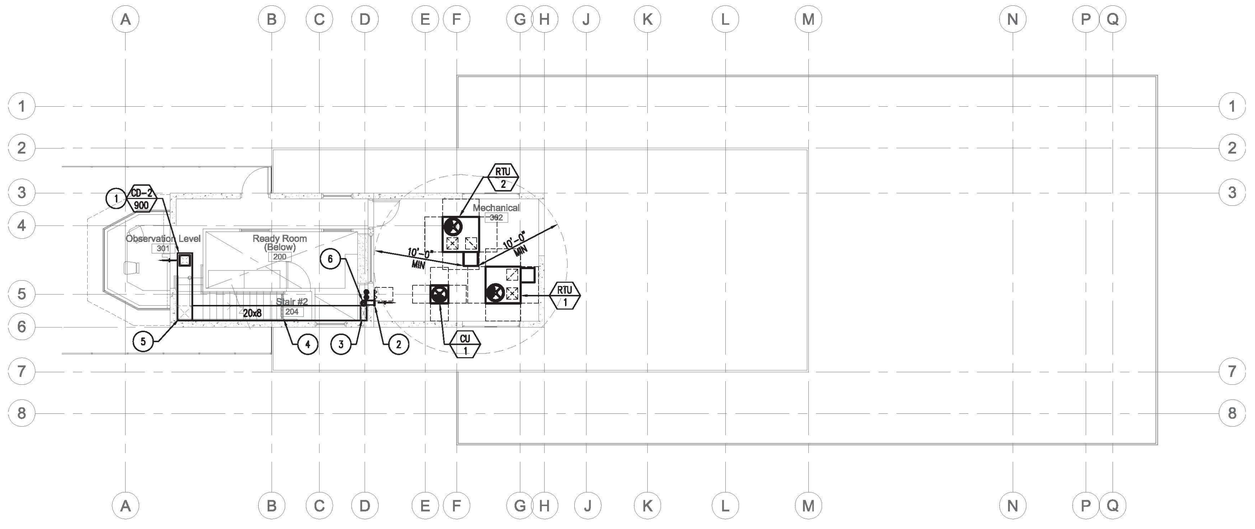

OBSERVATION LEVEL MECHANICAL PLAN

SCALE: 1/8" = 1'-0"

M-8

SPEC. NO. 8147

me engineers
M-E Engineers, Inc.
3760 Convoy St. Suite 340
San Diego CA 92111
t. 858.565.3900 / f. 858.565.3906
www.me-engineers.com

REGISTERED PROFESSIONAL ENGINEER
LAWRENCE A. BROOKS
NO.M16665
MECHANICAL
STATE OF CALIFORNIA
10/07/14

PLANS FOR THE CONSTRUCTION OF

South Mission Beach Lifeguard Station

OBSERVATION LEVEL MECHANICAL PLAN | M1.3

CITY OF SAN DIEGO, CALIFORNIA
ENGINEERING & CAPITAL PROJECTS
ARCHITECTURAL ENGINEERING & CONTRACTS DIVISION
SHEET 73 OF 94 SHEETS

WBS S-00791

APPROVED: FOR CITY ENGINEER — DATE: 10/13/2014

SUBMITTED BY: JIHAD SLEIMAN, PROJECT MANAGER

DESCRIPTION	BY	APPROVED	DATE	FILMED
ORIGINAL	L A B			

YOUSIF BENYAMIN, PROJECT ENGINEER

218-1693 CCS27 COORDINATES

1858-6253 CCS83 COORDINATES

CONTRACTOR _____ DATE STARTED _____
INSPECTOR _____ DATE COMPLETED _____

32849-73-D

South Mission Beach Lifeguard Station
San Diego, California

Proprietary design. These drawings and design are protected by common law copyright. All patentable material contained therein and originating with Domitrz + Associates Architects @ domusstudio LLP shall be the property of Domitrz + Associates Architects @ domusstudio LLP

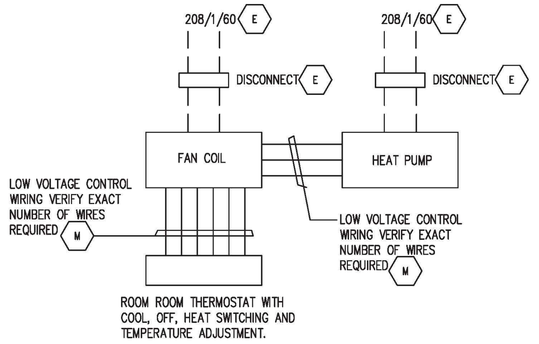

SPLIT SYSTEM HEAT PUMP CONTROL DIAGRAM

SCALE:	7
NONE	M4–1

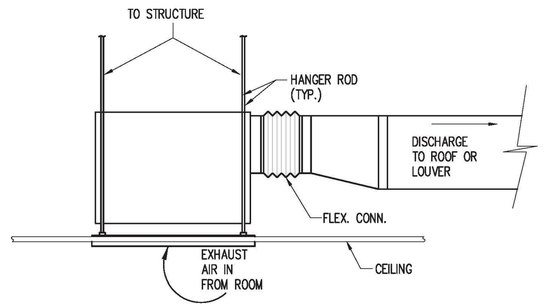

CEILING EXHAUST FAN DETAIL

SCALE:	4
NONE	M4–1

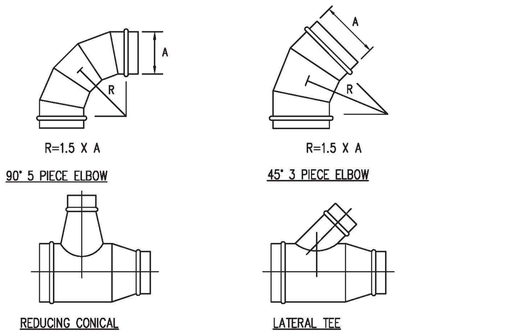

NOTES:

1. FITTINGS TO BE 2 GAGES HEAVIER THAN CONNECTING DUCT.
2. ADJUSTABLE ELBOWS PERMITTED W/DUCT CONSTRUCTION OF 2" W.C. OR LESS.
3. CONTINUOUS SEALANT AT EACH GORE JOINT.

ROUND DUCT FITTINGS DETAIL

SCALE:	1
NONE	M4–1

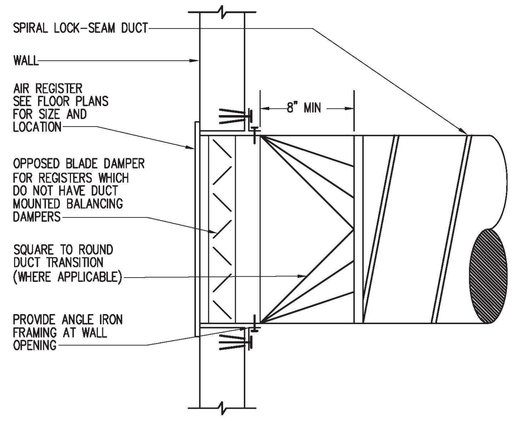

SIDEWALL REGISTER DETAIL

SCALE:	8
NONE	M4–1

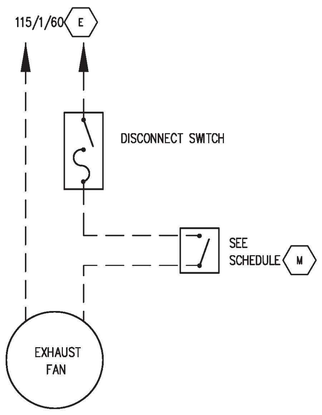

EXHAUST FAN CONTROL DIAGRAM

SCALE:	5
NONE	M4–1

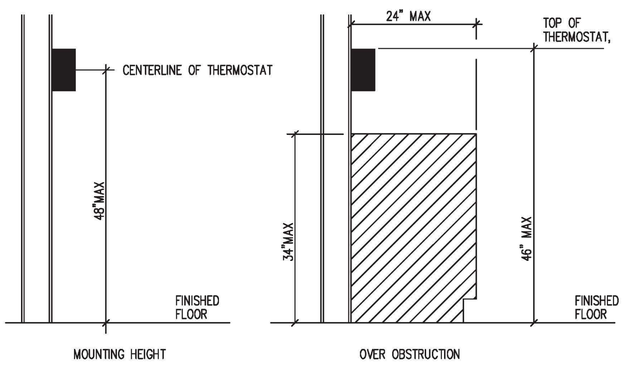

THERMOSTAT MOUNTING DETAIL

SCALE:	2
NONE	M4–1

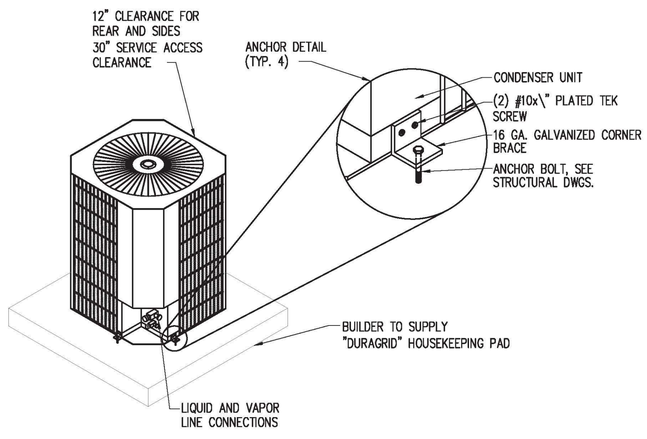

ROOFTOP CONDENSER UNIT DETAIL

SCALE:	9
NONE	M4–1

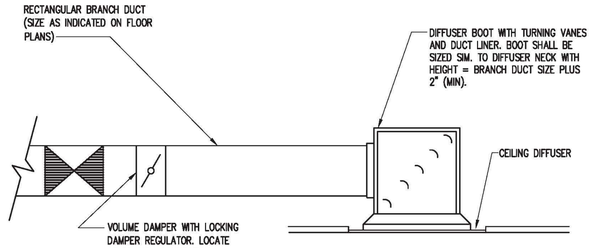

1. RETURN AND EXHAUST REGISTERS INSTALLED SIMILARLY, EXCEPT REGISTER BOOT SHALL BE UNLINED.
2. FOR HARD CEILINGS PROVIDE SURFACE MOUNTED TYPE CEILING DIFFUSERS WITH OPPOSED BLADE DAMPERS.
3. SEE SPECIFICATION FOR AIR DISTRIBUTION TYPE.
4. ATTACH DIFFUSER BOOT TO TERMINAL WITH SHEET METAL SCREWS AND MEDIUM PRESSURE DUCT SEALANT.

CEILING DIFFUSER W/ HEIGHT RESTRICTION HARD CONNECTION DETAIL

SCALE:	6
NONE	M4–1

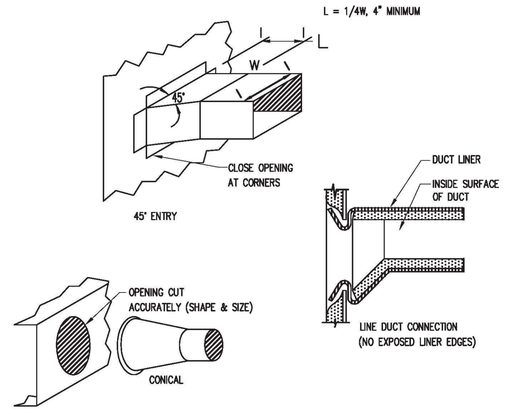

BRANCH CONNECTIONS DETAIL

SCALE:	3
NONE	M4–1

© COPYRIGHT October 07, 2014 at 2:25PM

South Mission Beach Lifeguard Station
San Diego, California

M–9

SPEC. NO. 8147

M-E Engineers, Inc.
3760 Convoy St. Suite 340
San Diego CA 92111
t.858.565.3900 / f.858.565.3906
www.me-engineers.com

REGISTERED PROFESSIONAL ENGINEER LAWRENCE A. BROOKS NO.M16885 MECHANICAL STATE OF CALIFORNIA 10/07/14

PLANS FOR THE CONSTRUCTION OF

South Mission Beach Lifeguard Station

MECHANICAL DETAILS — M4.1

CITY OF SAN DIEGO, CALIFORNIA
ENGINEERING & CAPITAL PROJECTS
ARCHITECTURAL ENGINEERING & CONTRACTS DIVISION
SHEET 74 OF 94 SHEETS

WBS S-00791

APPROVED FOR CITY ENGINEER — DATE 10/13/2014

SUBMITTED BY: JIHAD SLEIMAN, PROJECT MANAGER

DESCRIPTION	BY	APPROVED	DATE	FILMED
ORIGINAL	L A B			

YOUSIF BENYAMIN, PROJECT ENGINEER

218–1693 CCS27 COORDINATES

1858–6253 CCS83 COORDINATES

CONTRACTOR _____ DATE STARTED _____
INSPECTOR _____ DATE COMPLETED _____

32849–74–D

Proprietary design: These drawings and design are protected by common law copyright. All patentable material contained herein and not/granting with Domitry + Associates Architects @ domusstudio LLP shall be the property of Domitry + Associates Architects @ domusstudio LLP

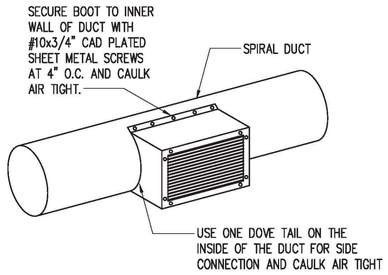

EXPOSED DUCT REGISTER DETAIL

SCALE:	6
NONE	M4-2

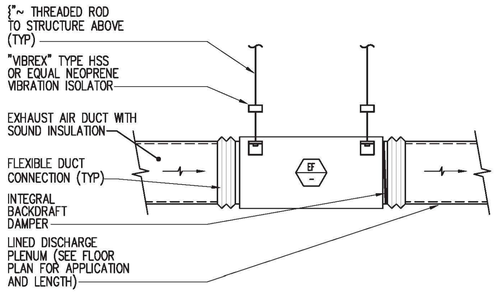

INLINE EXHAUST FAN DETAIL

SCALE:	3
NONE	M4-2

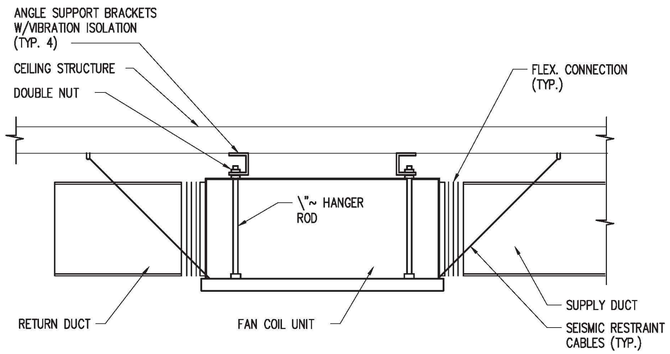

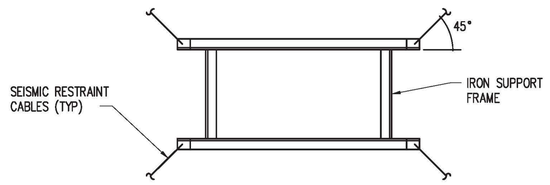

FAN COIL SUPPORT DETAIL

SCALE:	4
NONE	M4-2

SEQUENCE OF OPERATION

FC-1 / CU-1:

A. SYSTEM SHALL BE STARTED, STOPPED AND CONTROLLED THROUGH THE WALL THERMOSTAT.
B. WHEN THE SYSTEM IS STARTED, THE SUPPLY AIR FAN SHALL BE CONSTANTLY 'ON'.
C. COOLING MODE: ROOM TEMPERATURE SHALL BE MAINTAINED AT 76°F (FIELD ADJUSTABLE).
   1. WHEN THE ROOM TEMPERATURE SENSOR SENSED THAT THE ROOM TEMPERATURE IS WARMER THAN THE SETPOINT, THE CONDENSER FAN AND COMPRESSOR IN THE OUTDOOR UNIT SHALL OPERATE.
   2. WHEN THE ROOM TEMPERATURE SENSOR SENSED THAT THE ROOM TEMPERATURE IS COLDER THAN THE SETPOINT, THE CONDENSER FAN AND COMPRESSOR IN THE OUTDOOR UNIT SHALL TURN 'OFF'.
D. HEATING MODE: ROOM TEMPERATURE SHALL BE MAINTAINED AT 72°F (FIELD ADJUSTABLE).
   1. WHEN THE ROOM TEMPERATURE SENSOR SENSED THAT THE ROOM TEMPERATURE IS COLDER THAN THE SETPOINT, THE CONDENSER FAN AND COMPRESSOR IN THE OUTDOOR UNIT SHALL OPERATE.
   2. WHEN THE ROOM TEMPERATURE SENSOR SENSED THAT THE ROOM TEMPERATURE IS WARMER THAN THE SETPOINT, THE CONDENSER FAN AND COMPRESSOR IN THE OUTDOOR UNIT SHALL TURN 'OFF'.

RTU-1 & RTU-2:

A. SYSTEM SHALL BE STARTED, STOPPED AND CONTROLLED THROUGH THE WALL THERMOSTAT.
B. WHEN THE SYSTEM IS STARTED, THE SUPPLY AIR FAN SHALL BE CONSTANTLY 'ON'.
C. COOLING MODE: ROOM TEMPERATURE SHALL BE MAINTAINED AT 76°F (FIELD ADJUSTABLE).
   1. WHEN THE ROOM TEMPERATURE SENSOR SENSED THAT THE ROOM TEMPERATURE IS WARMER THAN THE SETPOINT, THE CONDENSER FAN AND COMPRESSOR IN THE OUTDOOR UNIT SHALL OPERATE.
   2. WHEN THE ROOM TEMPERATURE SENSOR SENSED THAT THE ROOM TEMPERATURE IS COLDER THAN THE SETPOINT, THE CONDENSER FAN AND COMPRESSOR IN THE OUTDOOR UNIT SHALL TURN 'OFF'.
D. HEATING MODE: ROOM TEMPERATURE SHALL BE MAINTAINED AT 72°F (FIELD ADJUSTABLE).
   1. WHEN THE ROOM TEMPERATURE SENSOR SENSED THAT THE ROOM TEMPERATURE IS COLDER THAN THE SETPOINT, THE CONDENSER FAN AND COMPRESSOR IN THE OUTDOOR UNIT SHALL OPERATE.
   2. WHEN THE ROOM TEMPERATURE SENSOR SENSED THAT THE ROOM TEMPERATURE IS WARMER THAN THE SETPOINT, THE CONDENSER FAN AND COMPRESSOR IN THE OUTDOOR UNIT SHALL TURN 'OFF'.

SEQUENCE OF OPERATION

SCALE:	1
NONE	M4-2

NO. PINS	LINER INTERIOR WIDTH
0	8" DN.
2	9"–16"
3	17"–28"
4	29"–40"
5	41"–52"
6	53"–64"
7	65"–76"
8	77"–88"
9	89"–100"

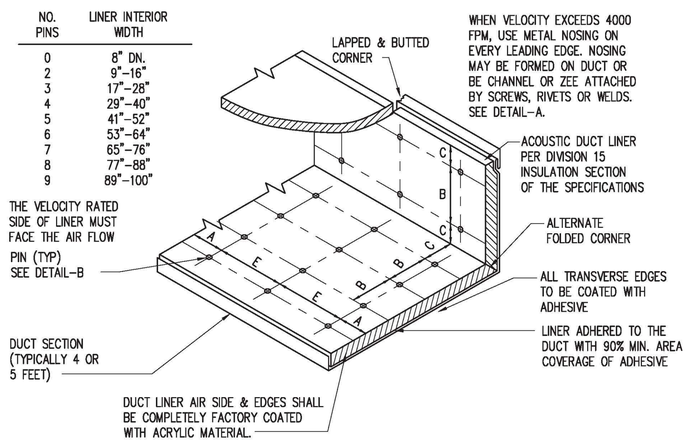

MAXIMUM SPACING FOR FASTENERS.
ACTUAL INTERVALS ARE APPROXIMATE.

VELOCITY *	DIMENSIONS			
	A	B	C	E
0–2500 FPM	3"	12"	4"	18"
2501–6000 FPM	3"	6"	4"	16"

* UNLESS A LOWER LEVEL IS SET BY MANUFACTURER OR LISTING AGENCY

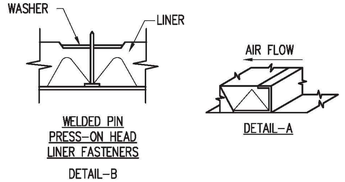

DUCT LINING DETAIL

SCALE:	5
NONE	M4-2

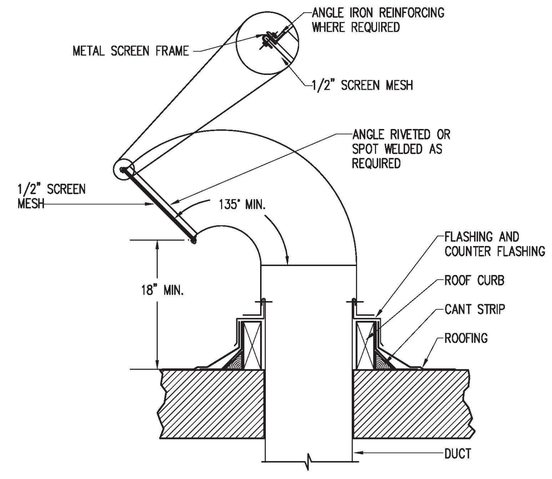

RECTANGULAR GOOSENECK DETAIL

SCALE:	2
NONE	M4-2

© COPYRIGHT October 07, 2014 at 2:23PM

South Mission Beach Lifeguard Station
San Diego, California

M-10

me engineers
M-E Engineers, Inc.
3760 Convoy St. Suite 340
San Diego CA 92111
t.858.565.3900 / f.858.565.3906
www.me-engineers.com

SPEC. NO. 8147

REGISTERED PROFESSIONAL ENGINEER LAWRENCE A. BRUCKER NO.M16865 MECHANICAL STATE OF CALIFORNIA
10/07/14

PLANS FOR THE CONSTRUCTION OF
South Mission Beach Lifeguard Station

MECHANICAL DETAILS — M4.2

CITY OF SAN DIEGO, CALIFORNIA
ENGINEERING & CAPITAL PROJECTS
ARCHITECTURAL ENGINEERING & CONTRACTS DIVISION
SHEET 75 OF 94 SHEETS

WBS S-00791

APPROVED: FOR CITY ENGINEER — DATE: 10/13/2014

SUBMITTED BY: JIHAD SLEIMAN, PROJECT MANAGER

DESCRIPTION	BY	APPROVED	DATE	FILMED
ORIGINAL	L A B			

YOUSIF BENYAMIN, PROJECT ENGINEER

218-1693 CCS27 COORDINATES

1858-6253 CCS83 COORDINATES

CONTRACTOR _____ DATE STARTED _____
INSPECTOR _____ DATE COMPLETED _____

32849-75-D

Proprietary design: These drawings and design are protected by common law copyright. All patentable material contained herein and originating with Dominy + Associates Architects @ domusstudio LLP shall be the property of Dominy + Associates Architects @ domusstudio LLP

© COPYRIGHT October 07, 2014 at 2:14PM

FIXTURE CONNECTION SCHEDULE

MARK	DESCRIPTION	MINIMUM PIPE SIZE				MANUFACTURER & MODEL NUMBER	REMARKS
		CW	HW	WASTE	VENT		
WC-1	WATER CLOSET - FLOOR MTD., F.V., (S.S.)	1-1/2"	-	4"	2"	KOHLER - #K-4406, "WELLWORTH", FLOOR MOUNTD, ELONGATED, V.C., 1.28 GPF WITH OLSONITE #10CC-SS, OPEN FRONT SEAT & SLOAN ROYAL #111 1.28 GPF FLUSH VALVE. FIXTURE COLOR: WHITE.	
WC-2	WATER CLOSET -FLOOR MTD., F.V., (S.S. ADA)	1-1/2"	-	4"	2"	KOHLER - #K-K-4405, "HIGHLINE", FLOOR MOUNTED, ELONGATED, SIPHON JET, V.C., WITH OLSONITE #10CC-SS, OPEN FRONT SEAT & SLOAN ROYAL #111 1.28 GPF FLUSH VALVE. FIXTURE COLOR: WHITE.	INSTALL PER ADA REQUIREMENTS PROVIDE WITH SLOAN *F-72-A1 FLUSHOMETER TRAP PRIMER CONNECTOR WHERE INDICATED ON PLANS.
LAV-1	LAVATORY	1/2"	1/2"	2"	1-1/2"	AMERICAN STANDARD 0321.026 "DECLYN" VITREOUS CHINA WITH WALL HANGER , ADA COMPLIANT, SYMMONS #S-60-GH SELF-CLOSING FAUCET, 0.2 GALLONS/CYCLE MAXIMUM. GRID DRAIN & ANGLE STOPS, BRADLEY S59-4000A TMV.	PROVIDE WITH SLOAN *F-72-A1 FLUSHOMETER TRAP PRIMER CONNECTOR WHERE INDICATED ON PLANS.
LAV-2	LAVATORY	1/2"	1/2"	2"	1-1/2"	KOHLER PENNINGTON K-2196 VITREOUS CHINA, 4" CENTERS WITH OVERFLOW, OVAL COUNTER MOUNTED LAVATORY AND MOEN 8413F03 FAUCET, SINGLE HANDLE, 0.35 GPM LAVATORY FAUCET.	INSULATE TAILPIECE AND SUPPLIES W/ HANDY SHIELD OR APPROVED EQUAL.
LAV-3	LAVATORY	1/2"	1/2"	2"	1-1/2"	KOHLER PENNINGTON K-2196 VITREOUS CHINA, 4" CENTERS WITH OVERFLOW, OVAL COUNTER MOUNTED LAVATORY AND MOEN 8413F03 FAUCET, SINGLE HANDLE, ADA COMPLIANT, 0.35 GPM LAVATORY FAUCET. BRADLEY S59-4000A TMV.	INSULATE TAILPIECE AND SUPPLIES W/ HANDY SHIELD OR APPROVED EQUAL.
S-1	SINK	1/2"	1/2"	2"	1-1/2"	ELKAY LRAD3322, FOUR (4) HOLE PUNCHED DOUBLE COMPARTMENT, 18 GAUGE TYPE 304 STAINLESS, SELF RIMMING, 13.5"X 16"X 5.5" DEEP, WITH ELKAY LKAD18 3" GRID STRAINERS, CHICAGO FAUCET 1102CP FAUCET WITH WRISTBLADE HANDLES, 8" SWING SPOUT AND SIDE SPRAY. 1.8 GPM MAXIMUM FLOWRATE	
KS-1	SINK	1/2"	1/2"	2"	1-1/2"	SINK INTEGRAL WITH COUNTERTOP BY OTHERS. MOEN 8707 1.5 GPM FAUCET WITH SIDE SPRAY. EVERPURE EV9820-10 DRINKING WATER FAUCET WITH FILTER SYSTEM QL2-OW200L. PROVIDE TRAP AND SUPPLIES. PROVIDE AND INSTALL FILTER FOR REFRIGERATOR PER MANUFACTURERS RECOMMENDATIONS.	FURNISHED BY OTHERS. PROVIDE AND INSTALL TRAPS , SUPPLIES AND OTHER ACCESSORIES REQUIRED.
SH-1	SHOWER	3/4"	3/4"	2"	1-1/2"	MOEN POSI-TEMP T-2444-25902 SHOWER SYSTEM. PRESSURE BALANCING VALVE W/INTERAL STOPS. MOEN-FLO XL 6302-EP SHOWER HEAD 1.75 GPM. DRAIN SHALL BE FD-1 LESS TRAP PRIMER CONNECTION.	
SH-2	SHOWER - ADA	3/4"	3/4"	3"	1-1/2"	MOEN 8342 ADA SHOWER SYSTEM. PRESSURE BALANCING MIXING VALVE W/INTEGRAL STOPS, 3 FUNCTION TRANSFER VALVE, 6302-EP FIXED SHOWERHEAD WITH ARM. 8349EP17 1.75 GPM HANDHELD HEAD W/NON-POSITIVE PAUSE, FLEXIBLE 5 FOOT METAL HOSE, SLIDE BAR & INLINE VACUUM BREAKER. DRAIN SHALL BE FD-1 LESS TRAP PRIMER.	
JS-1	MOP BASIN	3/4"	3/4"	3"	1-1/2"	FIAT TSB-3636 TERRAZZO MOP BASIN WITH S.S CAPS ON CURBS. 36 X 36 X 12" DEEP. CHICAGO FAUCET 540-LD897SWXF FAUCET WITH WATTS SERIES 8A VACUUM BREAKER	
JS-2	MOP BASIN FAUCET	3/4"	3/4"	3"	1-1/2"	CHICAGO FAUCET 640-L12E1ABCP-369YAB FAUCET WITH 12" L TYPE SWING SPOUT	INSTALLED IN FIRST AID ROOM 101
JS-3	SINK	1/2"	1/2"	2"	1-1/2"	JUST A-18665 WALL HUNG, 14 GAUGE TYPE 304 STAINLESS STEEL SERVICE SINK. 23"X 18-1/2"X 12" DEEP, J-35 DRAIN, CHICAGO FAUCET 640-L9E1-369YAB WALL MOUNTED FAUCET WITH ADJUSTABLE ARMS, INTEGRAL STOPS, 9-1/2" SWING SPOUT.	
WB-1	WASHER BOX	3/4"	3/4"	2"	1-1/2"	ACORN #8186- RECESSED, STAINLESS STEEL, WASHER SUPPLY DRAIN WITH HW, CW, WASTE CONNECTIONS, VACUUM BREAKERS. INSTALL WATER HAMMER ARRESTORS	
IB-1	ICE MAKER BOX	1/2"	-	-	-	OATEY 39140 POWDER COATED GALVANIZED STEEL ICE MAKER BOX WITH 1/4 TURN VALVE AND WATER HAMMER ARRESTOR	
HB-1	HOSE BIBB	3/4"	-	-	-	ACORN - #8121-SSLF-CP, LEAD FREE WALL MOUNT TYPE WITH VACCUM BREAKER AND CHROME PLATING, WITH LOCKSHIELD BONNET & REMOVABLE LOOSE KEY HANDLE.	
HB-2	WALL HYDRANT	3/4"	3/4"	-	-	ACORN - #8156-SSLF, RECESSED HOT & COLD HOSE BIBB IN HOSE BOX WITH VACUUM BREAKER ACCESS DOOR WITH LOCK VANDAL RESISTANT, LEAD FREE.	
HB-3	WALL HYDRANT	3/4"	-	-	-	ACORN - #8151-SSLF, RECESSED COLD WATER HOSE BIBB IN HOSE BOX WITH VACUUM BREAKER ACCESS DOOR WITH LOCK VANDAL RESISTANT, LEAD FREE.	
FD-1	FLOOR DRAIN	-	-	2"	1-1/2"	J.R. SMITH - #2005YA-P050, 5" DIA., ROUND NICKEL BRONZE STRAINER HEAD & TRAP PRIMER CONNECTION.	ALL FLOOR DRAINS SHALL HAVE TRAP PRIMER CONNECTIONS
FS-1	FLOOR SINK	-	-	2"	1-1/2"	J.R. SMITH - #3100Y, NO-HUB OUTLET. PARTIAL GRATE, 8-1/2"X 8-1/2""X 6" DEEP. 2" OUTLET, TRAP PRIMER CONNECTION.	
IWR-1	ROOF INDIRECT WASTE RECEPTOR	-	-	2"	1-1/2"	J.R. SMITH - #3960 ROOF-CEPTOR, NO-HUB OUTLET. 7|" OPENING. 2" OUTLET NO TRAP PRIMER CONNECTION.	IWR-1 SHALL BE LISTED BY IAPMO AS AN APPROVED INDIRECT WASTE RECEPTOR.
TD-1	TRENCH DRAIN	-	-	4"	2"	ZURN 883 6" WIDE SHALLOW MODULAR POLYPROPYLENE TRENCH DRAIN SYSTEM W/SLOTTED, H-20 RATED DUCTILE IRON GRATE	
RD-1	ROOF DRAIN	-	-	-	-	J.R. SMITH - 1310-ERC DUCO CAST IRON BODY WITH ALUMINUM DOME, EXTENSION, SUMP RECEIVER AND UNDERDECK CLAMP	
ORD-1	OVERFLOW ROOF DRAIN	-	-	-	-	J.R. SMITH - 1310-ERC-WD DUCO CAST IRON BODY WITH ALUMINUM DOME, EXTENSION, SUMP RECEIVER, UNDERDECK CLAMP AND 2" SOLID WATER DAM	
ST-1	STORM & OVERFLOW TERMINATION FITTING	-	-	-	-	J.R. SMITH - 1770 DOWNSPOUT NOZZLE	INSTALL AT STORM AND OVERFLOW STORM TERMINATION OUTSIDE BUILDING
TP-1	TRAP PRIMER	1/2"	-	-	-	PPP OR EQUAL. PRESSURE TYPE CONFORMING TO AB 1953 CAPABLE OF SERVING MULTIPLE DRAINS.	
TP-2	ELECTRIC TRAP PRIMER	1/2"	-	-	-	PPP OR EQUAL. ELECTRIC T.P. CONFORMING TO AB 1953 CAPABLE OF SERVING MULTIPLE DRAINS.	

PLUMBING EQUIPMENT SCHEDULE

ITEM	DESCRIPTION	LOCATION	MANUFACTURER & MODEL NUMBER	REMARKS
WH 1	WATER HEATER (ELECTRIC)	JANITORS ROOM	A.O.SMITH - DRE 120 -119 GALLON CAPACITY, 45 KILOWATT, 184 GPH RECOVERY RATE AT 100°F. RISE. OPERATING WEIGHT-1400 LBS., 9 ELEMENTS, 5 KILOWATT PER ELEMENT. 208 V/ 3 PH.	TERMINATE P & T RELIEF LINE AT FLOOR SINK. THERMAL EXPANSION TANK ZURN XT-18. LEAD FREE 2.4 GALLONS ACCEPTANCE. WEIGHT 10 LBS.
CP 1	CIRCULATION PUMP (IN-LINE)	JANITORS ROOM	BELL & GOSSETT - NBF-10S, 3 GPM AT 5 FT. HD., 115 V/ 1 PH., 0.46 AMPS, 55 WATTS, 2800 RPM, 9 LBS.	
GD 1	GARBAGE DISPOSAL	SEE PLANS	IN-SINK-ERATOR - MODEL PRO 77, 1 H.P., STAINLESS STEEL CONSTRUCTION, 115 V/ 1 PH, 1725 RPM.	
PRV 1	PRESSURE REGULATING CW VALVE	SEE PLANS	WILKINS - #500YSBR SERIES. 1-1/2" ALL BRONZE BODY. FACTORY SET AT 70 PSI. LEAD FREE	FALL-OFF PRESSURE OF 10 PSI AT 60 GPM PROVIDE AND INSTALL Y STRAINER UPSTREAM LEAD FREE
SI 1&2	SAND INTERCEPTOR	SEE PLANS	JENSEN - 320 GALLON SAND-OIL INTERCEPTOR. H-20 TRAFFIC LOAD. 4" INLET/OUTLET. PRE-CAST CONCRETE.	

PLUMBING GENERAL NOTES

1. THESE DRAWINGS ARE ESSENTIALLY DIAGRAMMATIC AND ARE NOT INTENDED TO INDICATE ALL DETAILS AND NECESSARY OFFSETS OF PIPING. THE CONTRACTOR SHALL INSTALL MATERIAL AND EQUIPMENT IN A MANNER AS TO CONFORM TO STRUCTURE, AVOID OBSTRUCTIONS, PRESERVE HEADROOM, AND KEEP OPENINGS AND PASSAGEWAYS CLEAR. ALL INSTALLATIONS SHALL BE CONSISTENT WITH NORMALLY ACCEPTABLE INDUSTRY STANDARDS.
2. EQUIPMENT INDICATED ON THIS DRAWING IS SHOWN IN APPROXIMATE POSITION(S). CONTRACTOR SHALL FIELD VERIFY ALL CONDITIONS INCLUDING EQUIPMENT LOCATIONS, P.O.C'S AND STRUCTURAL MEMBERS PRIOR TO INSTALLATION. IN ALL CASES, ADEQUATE ACCESS (PER MANUFACTURERS RECOMMENDATIONS AND CODE COMPLIANCE) FOR MAINTENANCE AND REPLACEMENT OF EQUIPMENT SHALL BE PROVIDED.
3. ALL WORK SHALL BE DONE IN ACCORDANCE WITH ALL APPLICABLE CODES. NOTHING SHOWN ON THE PLANS OR STATED IN THE SPECIFICATIONS IS INTENDED TO INDICATE THAT THE INSTALLATIONS OR CONNECTIONS OF ANY ITEM OR DEVICE SHOULD BE DONE CONTRARY TO MANUFACTURERS INSTRUCTIONS AND ALL APPLICABLE CODES AND REGULATIONS. THE CONTRACTOR IS RESPONSIBLE TO INSURE THAT THE INSTALLATIONS AND CONNECTIONS OF ALL ITEMS AND DEVICES CONFORMS TO MANUFACTURERS INSTRUCTIONS AND TO ALL APPLICABLE CODES AND REGULATIONS.
4. ALL PLUMBING EQUIPMENT, MATERIAL, AND ALL CONNECTIONS THERETO SHALL BE INSTALLED COMPLETE PER MANUFACTURERS INSTRUCTIONS TO PROVIDE A COMPLETE AND FULLY OPERATIONAL SYSTEM.
5. SOIL, SEWER AND WASTE PIPING UNDER 3" IN SIZE SHALL SLOPE AT 1/4" PER FOOT MINIMUM, PIPING OVER 3" SHALL SLOPE AT 1/8" PER FOOT MINIMUM.
6. ALL PLUMBING SOLDER SHALL BE LEAD FREE.
7. CONDENSATE DRAIN PIPING FROM EQUIPMENT WITHIN BUILDING SHALL BE INSULATED A MINIMUM DISTANCE OF 20 (TWENTY) FEET FROM SAID EQUIPMENT.
8. CROSS CONNECTION PROTECTION SHALL BE PROVIDED AT ALL POTABLE WATER SUPPLIED APPLIANCES AND EQUIPMENT.
9. FLOOR SINKS FOR INDIRECT WASTE, (EXCLUDING KITCHENS): FLOOR SINKS INDICATED ON THESE DRAWINGS ADJACENT TO EITHER OWNER OR CONTRACTOR FURNISHED EQUIPMENT ARE USED FOR INDIRECT WASTE DRAINAGE OF SAID EQUIPMENT. THE CONTRACTOR SHALL PROVIDE AND ROUTE INDIRECT WASTE PIPING FROM EQUIPMENT TO THE INDICATED FLOOR SINK(S), AND SPILL INTO FLOOR SINK(S) WITH A MINIMUM ONE INCH (1") AIR GAP. NO DIRECT CONNECTION OF EQUIPMENT IS ALLOWED. ALL FLOOR SINKS SHALL BE INSTALLED FLUSH WITH FINISHED FLOOR, OR AS REQUIRED BY LOCAL CODE AUTHORITY.
10. PLUMBING PIPING SYSTEMS SHALL BE INSULATED PER BUILDING ENERGY EFFICIENCY STANDARDS (E.E.S.) SECTION 123.
11. PLUMBING EQUIPMENT SHALL BE CERTIFIED BY AND COMPLY WITH THE STATE OF CALIFORNIA ENERGY CONSERVATION STANDARDS (E.E.S.) SECTION 113. COMPLIANCE CERTIFICATES SHALL BE PROVIDED WITH EQUIPMENT SUBMITTALS.
12. WATER HEATERS FOR DOMESTIC HOT WATER SHALL COMPLY WITH THE STATE OF CALIFORNIA ENERGY EFFICIENCY STANDARDS (E.E.S.) SECTION 113.
13. ALL INSULATING MATERIALS INSTALLED MUST BE CERTIFIED BY CALIFORNIA ENERGY COMMISSION TO MEET C.E.C. ENERGY EFFICIENCY STANDARDS (E.E.S.) SECTION 118, 123 AND 124.
14. ALL HOSE BIBBS INSTALLED SHALL BE EQUIPPED WITH VACUUM BREAKERS.
15. SANITARY SEWER AND STORM DRAIN PIPING BELOW GRADE TO FIVE (5) FEET OUT OF BUILDING: HUBLESS CAST IRON OR ABS (AS APPROVED BY LOCAL CODE AUTHORITY). STORM, SOIL, WASTE, AND VENT PIPING, ABOVE GRADE, WITHIN BUILDING: HUBLESS CAST IRON SOIL PIPE WITH NEOPRENE SLEEVES AND STAINLESS STEEL COUPLINGS. ABS DWV PIPING MAY BE USED BELOW GRADE WITHIN BUILDING. PRESSURE WASTE PIPING: TYPE "L" COPPER WITH WROUGHT COPPER SWEAT FITTINGS AND 95/5 SOLDER.
16. WATER CLOSETS SHALL CONSUME NO MORE THAN 1.28 GALLONS PER FLUSH. URINALS SHALL CONSUME NO MORE THAN 0.5 GALLON PER FLUSH. (IN SAN DIEGO COUNTY, BOTH FIXTURES SHALL BE LISTED ON THE WATER AUTHORITY "LIST OF APPROVED LOW CONSUMPTION FIXTURES").
17. LAVATORY FAUCETS IN PUBLIC TOILET ROOMS SHALL BE THE SELF CLOSING TYPE.
18. ALL LAVATORY FAUCETS SHALL DISCHARGE A MAXIMUM OF 0.4 GPM.
19. ANTI-SCALD MIXING VALVES SHALL BE PROVIDED AT TUB/SHOWER CONTROLS.
20. ALL SHOWERHEADS SHALL DISCHARGE A MAXIMUM OF 2.0 GPM.
21. ALL WATER HEATERS SHALL COMPLY WITH UPC 2010 SECTION 608.3.
22. PLUMBING FIXTURES, FAUCETS AND COMPONENTS WITH EXPOSURE TO POTABLE WATER SYSTEM FOR HUMAN CONSUMPTION SHALL COMPLY WITH AB 1953.
23. ALL SINK FAUCETS SHALL DISCHARGE A MAXIMUM OF 1.8 GPM.
24. BUILDING DRAIN AND VENT PIPING MATERIALS SHALL COMPLY WITH SECTIONS 701.0 AND 903.0 OF THE CALIFORNIA PLUMBING CODE.
25. FLOOR DRAINS OR SIMILAR TRAPS DIRECTLY CONNECTED TO THE DRAINAGE SYSTEM AND SUBJECT TO INFREQUENT USE SHALL BE PROVIDED WITH AN APPROVED AUTOMATIC MEANS OF MAINTAINING THEIR WATER SEALS.
26. POTABLE WATER PIPING SHALL BE COPPER TUBE ASTM B88 TYPE L WITH COPPER PRESSURE FITTINGS ASME 16.18 CAST COPPER ALLOY OR ASME 16.22 WROUGHT COPPER JOINED BY SOLDER FILLER METALS ASTM B32 LEAD FREE ALLOYS WITH WATER FLUSHABLE FLUX ACCORDING TO ASTM B813.
27. WATER HEATER SHALL BE ANCHORED OR STRAPPED TO RESIST HORIZONTAL DISPLACEMENT DUE TO EARTHQUAKE MOTION PER SECTION 508.2 CPC.
28. PLUMBING FIXTURES AND FITTINGS SHALL COMPLY WITH ALL THE REQUIREMENTS LISTED IN TABLES 5.303.2.2 OR 5.303.23 AND TABLE 5.303.6 IN THE CALIFORNIA GREEN BUILDING STANDARDS CODE.
29. BUILDING SEWERS SHALL COMPLY WITH CHAPTER 7 CPC.
30. SHOWERS AND TUB-SHOWER COMBINATIONS SHALL BE PROVIDED WITH MIXING VALVES PER SECTION 418 CPC.

PLUMBING LEGEND

SYMBOL	ABBREV.	DESCRIPTION
	S OR W	SOIL OR WASTE ABOVE GRADE OR FLOOR
	S OR W	SOIL OR WASTE BELOW GRADE OR FLOOR
— SD —	SD	STORM DRAIN ABOVE GRADE OR FLOOR
— SD —	SD	STORM DRAIN BELOW GRADE OR FLOOR
	V	VENT
	CW	COLD WATER
	HW	HOT WATER
	HWR	HOT WATER RETURN
— G —	G	GAS
	VALVE	SHUTOFF VALVE
— F —	F	FIRE SERVICE
	BC	BALANCING VALVE OR COCK
	BFV	BUTTERFLY VALVE
	BV	BALL VALVE
	SOV	SHUTOFF VALVE
		PIPING UP
		PIPING DOWN
	FS	FLOOR SINK
	FD	FLOOR DRAIN
	WHA	WATER HAMMER ARRESTOR

PLUMBING DRAWING LIST

SHEET NO.	SHEET TITLE
P0.1	PLUMBING LEGEND, SCHEDULES AND NOTES
P1.0	UNDERFLOOR PLUMBING PLAN
P1.1	FIRST FLOOR PLUMBING PLAN
P1.2	SECOND FLOOR & ROOF PLUMBING PLAN
P1.3	OBSERVATION FLOOR AND ROOF PLUMBING PLAN
P3.1	WASTE & VENT DIAGRAM & WATER RISER
P4.1	PLUMBING DETAILS

P-1

SPEC. NO. 8147

M-E Engineers, Inc.
3760 Convoy St. Suite 340
San Diego CA 92111
t. 858.565.3900 / f. 858.565.3906
www.me-engineers.com

REGISTERED PROFESSIONAL ENGINEER LAWRENCE A. BROOKS NO.M16665 MECHANICAL STATE OF CALIFORNIA 10/07/14

PLANS FOR THE CONSTRUCTION OF

South Mission Beach Lifeguard Station

PLUMBING LEGEND, SCHEDULES & NOTES — P0.1

CITY OF SAN DIEGO, CALIFORNIA
ENGINEERING & CAPITAL PROJECTS
ARCHITECTURAL ENGINEERING & CONTRACTS DIVISION
SHEET 76 OF 94 SHEETS

WBS S-00791

APPROVED: [signature] FOR CITY ENGINEER — 10/13/2014 DATE

SUBMITTED BY: JIHAD SLEIMAN, PROJECT MANAGER
YOUSIF BENYAMIN, PROJECT ENGINEER

DESCRIPTION	BY	APPROVED	DATE	FILMED
ORIGINAL	L A B			

218-1693 CCS27 COORDINATES
1858-6253 CCS83 COORDINATES

CONTRACTOR ____ DATE STARTED ____
INSPECTOR ____ DATE COMPLETED ____

32849-76-D

South Mission Beach Lifeguard Station
San Diego, California

KEYED NOTES:

1. 2" W UP TO FLOOR DRAIN
2. 2" W UP TO FLOOR SINK
3. 1/2" TRAP PRIMER LINE
4. 1-1/2" VENT UP FROM FLOOR DRAIN OR SHOWER DRAIN
5. 2" W UP TO SINK
6. 3" W UP TO JS
7. 1-1/2" V UP
8. 4" SAN UP/2" V UP TO WC
9. 2" W UP TO LAV
10. 2" W UP TO IWR
11. 2" W UP TO WASHER BOX
12. 4" SAN UP TO WATER CLOSET
13. SEAL ALL FOUNDATION WALL PENETRATIONS WITH LINKSEAL.

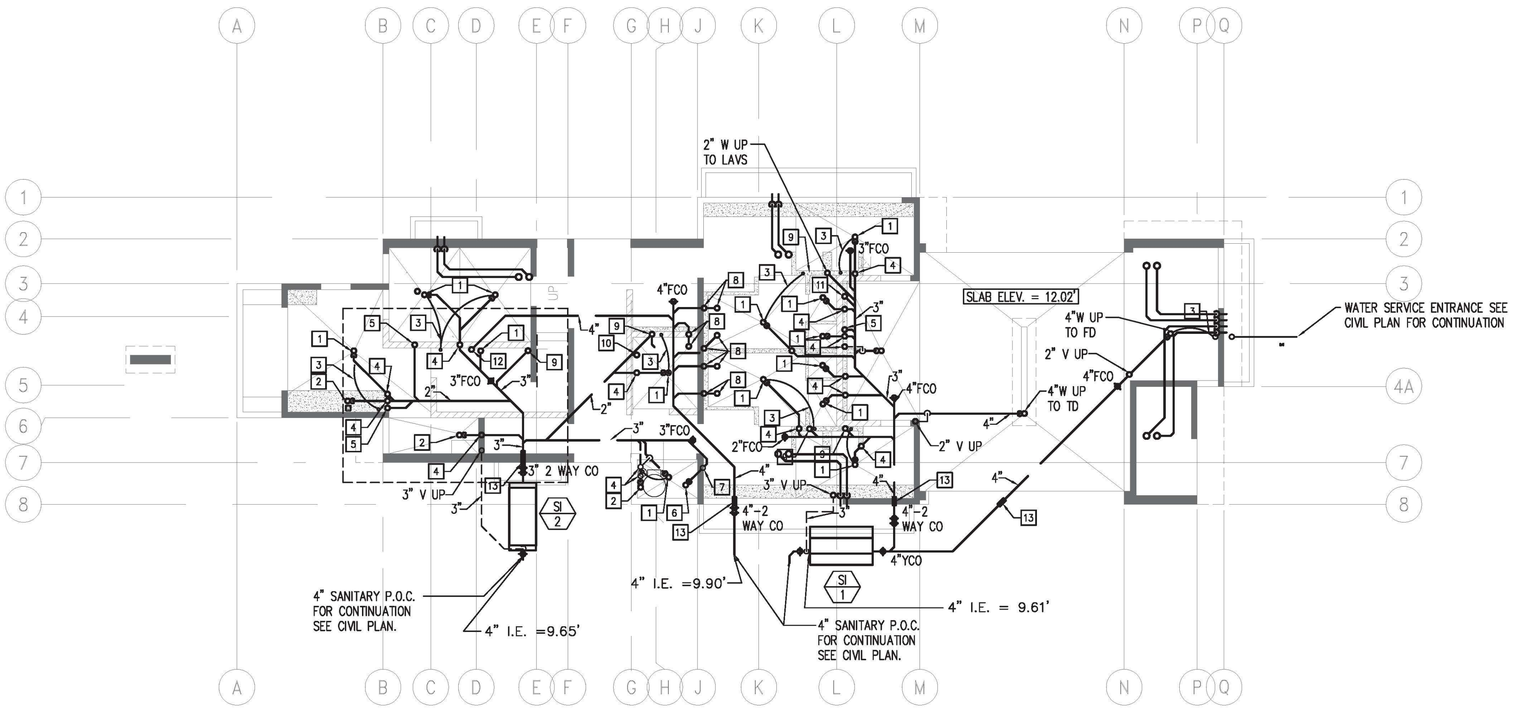

A UNDERFLOOR PLUMBING PLAN

SCALE: _" = 1'-0"

P-2

SPEC. NO. 8147

me engineers

M-E Engineers, Inc.
3760 Convoy St. Suite 340
San Diego CA 92111
t. 858.565.3900 / f. 858.565.3906
www.me-engineers.com

REGISTERED PROFESSIONAL ENGINEER LAWRENCE A. BROOKS NO.M16665 MECHANICAL STATE OF CALIFORNIA 10/07/14

PLANS FOR THE CONSTRUCTION OF

South Mission Beach Lifeguard Station

UNDERFLOOR PLUMBING PLAN | P1.0

CITY OF SAN DIEGO, CALIFORNIA
ENGINEERING & CAPITAL PROJECTS
ARCHITECTURAL ENGINEERING & CONTRACTS DIVISION
SHEET 77 OF 94 SHEETS

WBS S-00791

APPROVED: FOR CITY ENGINEER — DATE 10/13/2014

SUBMITTED BY: JIHAD SLEIMAN, PROJECT MANAGER

DESCRIPTION	BY	APPROVED	DATE	FILMED
ORIGINAL	L A B			

YOUSIF BENYAMIN, PROJECT ENGINEER

218-1693 CCS27 COORDINATES

1858-6253 CCS83 COORDINATES

CONTRACTOR _____ DATE STARTED _____
INSPECTOR _____ DATE COMPLETED _____

32849-77-D

South Mission Beach Lifeguard Station
San Diego, California

Proprietary design: These drawings and design are protected by common law copyright. All patentable material contained herein and originating with Dominy + Associates Architects @ domusstudio LLP shall be the property of Dominy + Associates Architects @ domusstudio LLP

© COPYRIGHT October 07, 2014 at 2:12PM

GENERAL NOTES:

1. PROVIDE CONDENSATE DRAINAGE TO HVAC EQUIPMENT.

KEYED NOTES:

1. 1-1/2" CW DN, 2" VENT UP, 4"W. DN TO W.C.(TYP)
2. 1/2" C & HW UP, 1-1/2" V UP, 2"W. DN TO LAV
3. 1/2" CW VALVED CONNECTION TO TRAP PRIMER
4. 1-1/2" VENT DN TO FLOOR DRAIN OR SHOWER DRAIN
5. 3/4" H & CW DN TO SHOWER
6. 3/4" H & CW DN, 1-1/2" VENT UP, 2"W. DN TO SHOWER
7. 3/4" H & CW DN, 1-1/2" VENT UP, 2"W. DN TO WB-1
8. 3/4" H & CW DN, 1-1/2" VENT UP, 2"W. DN TO SINK
9. 3/4" H & CW DN TO JS
10. 1/2" H & CW UP, 2" W UP TO LAV
11. 3/4" CW UP, 1/2" HW UP, 2"W UP
12. CONNECT 3/4" CONDENSATE FROM F.C. TO SINK TAILPIECE
13. 2" WASTE DN WITH 2" FINISHED WALL CLEANOUT
14. 3/4" CW DN TO HOSE BIBB
15. 3/4" VALVED CW CONNECTION TO ICE MACHINE. PROVIDE AND INSTALL WATER FILTER SYSTEM PER ICE MAKER MANUFACTURER'S RECOMMENDATIONS.
16. 3/4" VALVED C & HW CONNECTION TO HOSE BIBB
17. STORM PIPING UP TO ROOF DRAIN
18. STORM PIPING DN TERMINATE OUTSIDE BUILDING W/ST-1
19. OVERFLOW STORM PIPING UP TO OVERFLOW ROOF DRAIN
20. OVERFLOW STORM PIPING DN TERMINATE OUTSIDE BUILDING W/ST-1
21. 2" W UP TO IWR
22. 2" W DN
23. 3" V DN FROM SI-2
24. INCREASE STORM AND OVERFLOW STORM PIPING SIZE FROM 2" TO 3" TRANSITIONING FROM VERTICAL TO HORIZONTAL

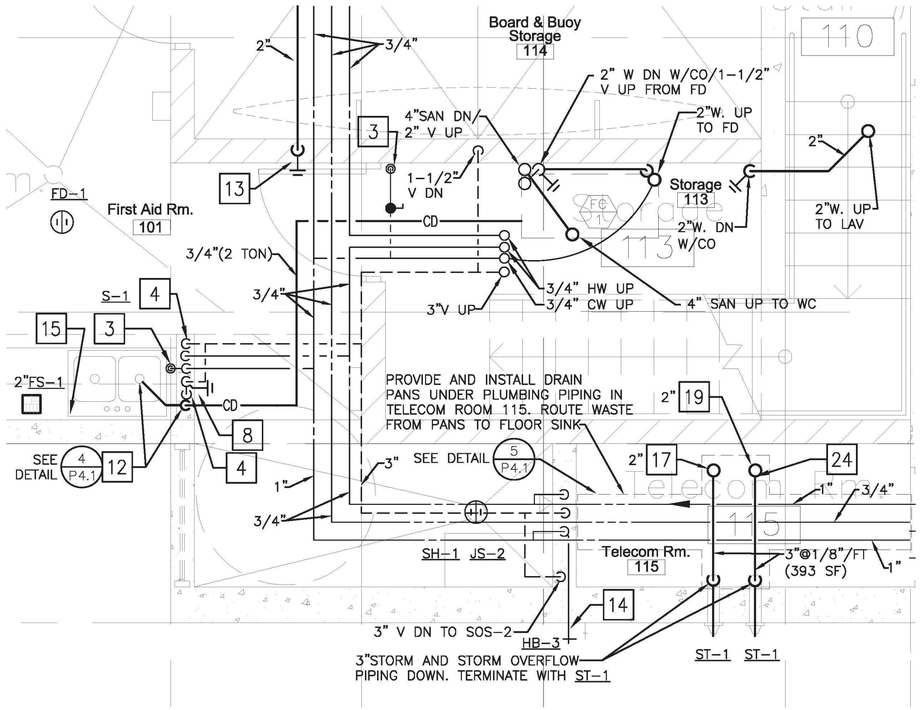

D ENLARGED FLOOR PLAN

SCALE: 1/2" = 1'-0"

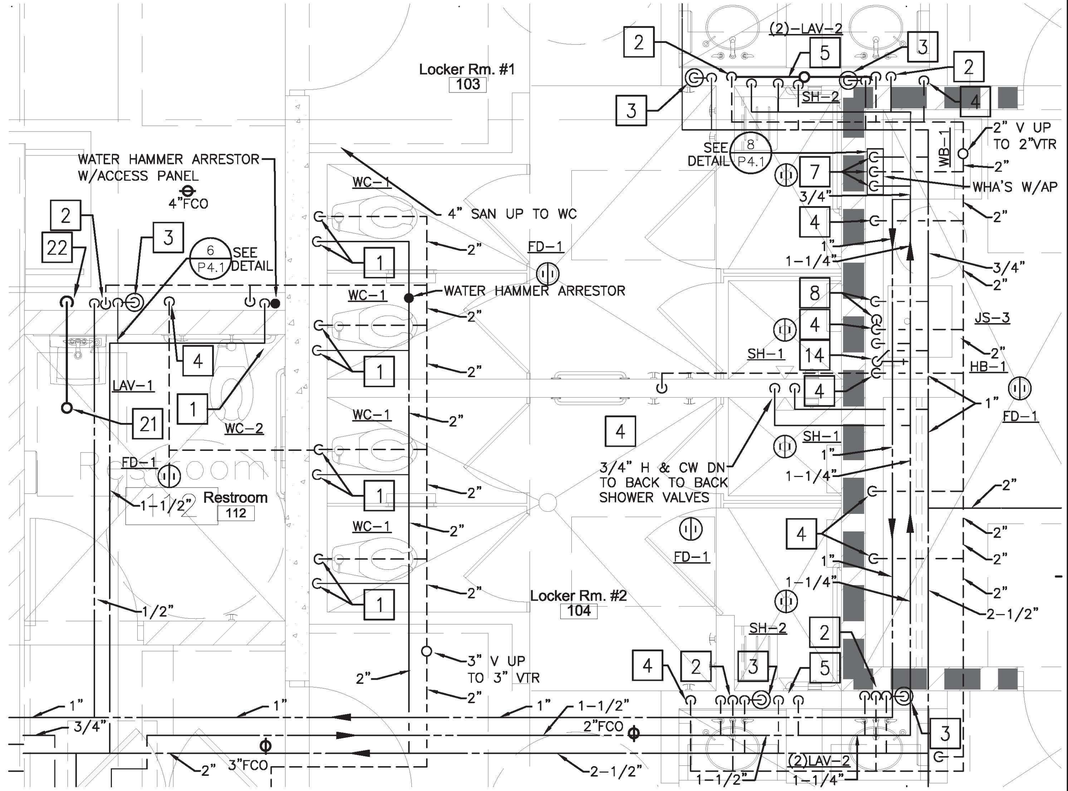

B ENLARGED FLOOR PLAN

SCALE: 1/2" = 1'-0"

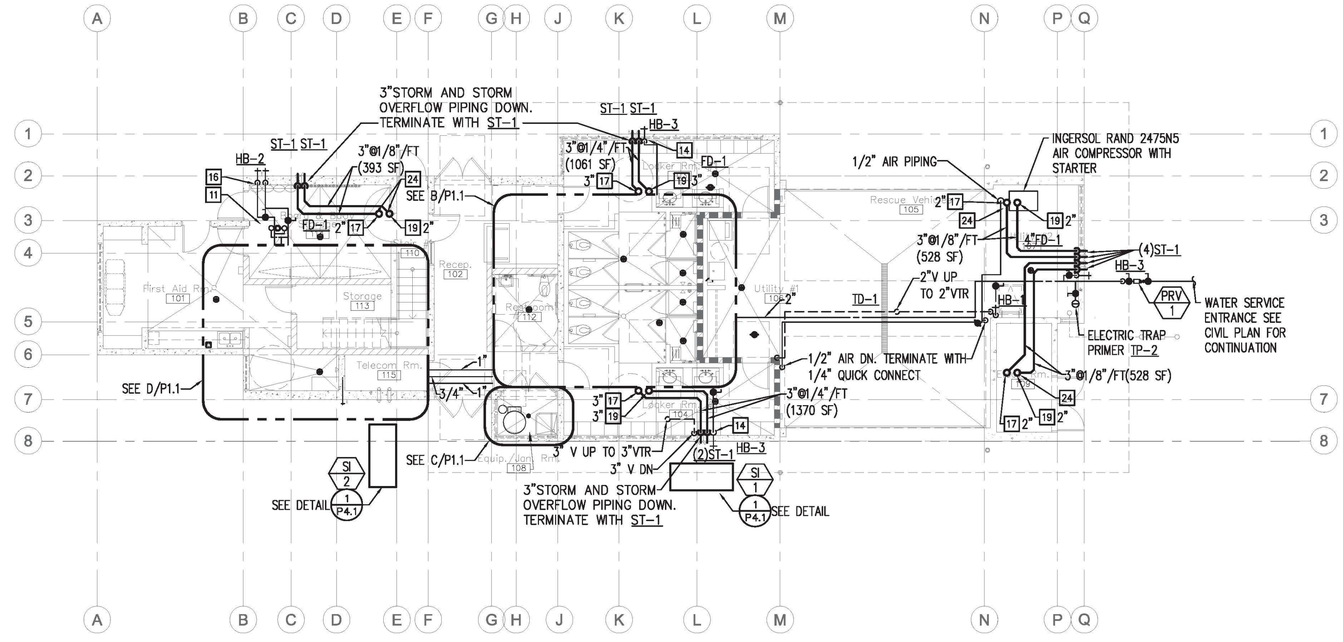

A FIRST FLOOR PLUMBING PLAN

SCALE: _" = 1'-0"

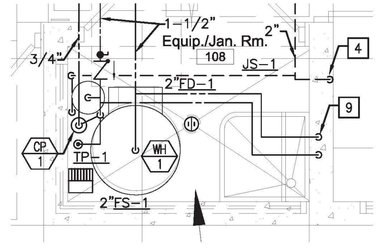

C ENLARGED EQUIPMENT/JAN ROOM PLAN

SCALE: 1/2" = 1'-0"

P-3

M-E Engineers, Inc.
3760 Convoy St. Suite 340
San Diego CA 92111
t. 858.565.3900 / f. 858.565.3906
www.me-engineers.com

SPEC. NO. 8147

REGISTERED PROFESSIONAL ENGINEER LAWRENCE A. BISSONNETTE NO.M16665 MECHANICAL STATE OF CALIFORNIA 10/07/14

PLANS FOR THE CONSTRUCTION OF

South Mission Beach Lifeguard Station

FIRST FLOOR PLUMBING PLAN — P1.1

CITY OF SAN DIEGO, CALIFORNIA
ENGINEERING & CAPITAL PROJECTS
ARCHITECTURAL ENGINEERING & CONTRACTS DIVISION
SHEET 78 OF 94 SHEETS

WBS S-00791

APPROVED _____ FOR CITY ENGINEER — DATE 10/13/2014

SUBMITTED BY: JIHAD SLEIMAN, PROJECT MANAGER

DESCRIPTION	BY	APPROVED	DATE	FILMED
ORIGINAL	L A B			

YOUSIF BENYAMIN, PROJECT ENGINEER

218-1693 CCS27 COORDINATES

1858-6253 CCS83 COORDINATES

CONTRACTOR _____ DATE STARTED _____
INSPECTOR _____ DATE COMPLETED _____

32849-78-D

South Mission Beach Lifeguard Station
San Diego, California

Proprietary design: These drawings and design are protected by common law copyright. All patentable material contained herein and originating with Dominy + Associates Architects @ domusstudio LLP shall be the property of Dominy + Associates Architects @ domusstudio LLP

© COPYRIGHT October 07, 2014 at 2:10PM

GENERAL NOTES:

1. PROVIDE CONDENSATE DRAINAGE TO HVAC EQUIPMENT.

KEYED NOTES:

1. PROVIDE AND INSTALL WATER FILTER SYSTEM FOR REFRIGERATOR ICE MAKER PER MANUFACTURER'S RECOMMENDATIONS UNDER SINK KS-1 IF REFRIGERATOR IS NOT FURNISHED WITH FILTER. ROUTE PIPING FROM FILTER TO ICEMAKER BOX. SEE DETAIL 7/P4.1
2. 2" STORM PIPING UP TO RD-1(309 SF)
3. 2" OVERFLOW STORM PIPING UP TO ORD-1(309 SF)
4. INCREASE STORM AND OVERFLOW STORM PIPING SIZE FROM 2" TO 3" TRANSITIONING FROM VERTICAL TO HORIZONTAL
5. 3"STORM AND STORM OVERFLOW PIPING DOWN. TERMINATE WITH ST-1
6. THRU WALL SCUPPER

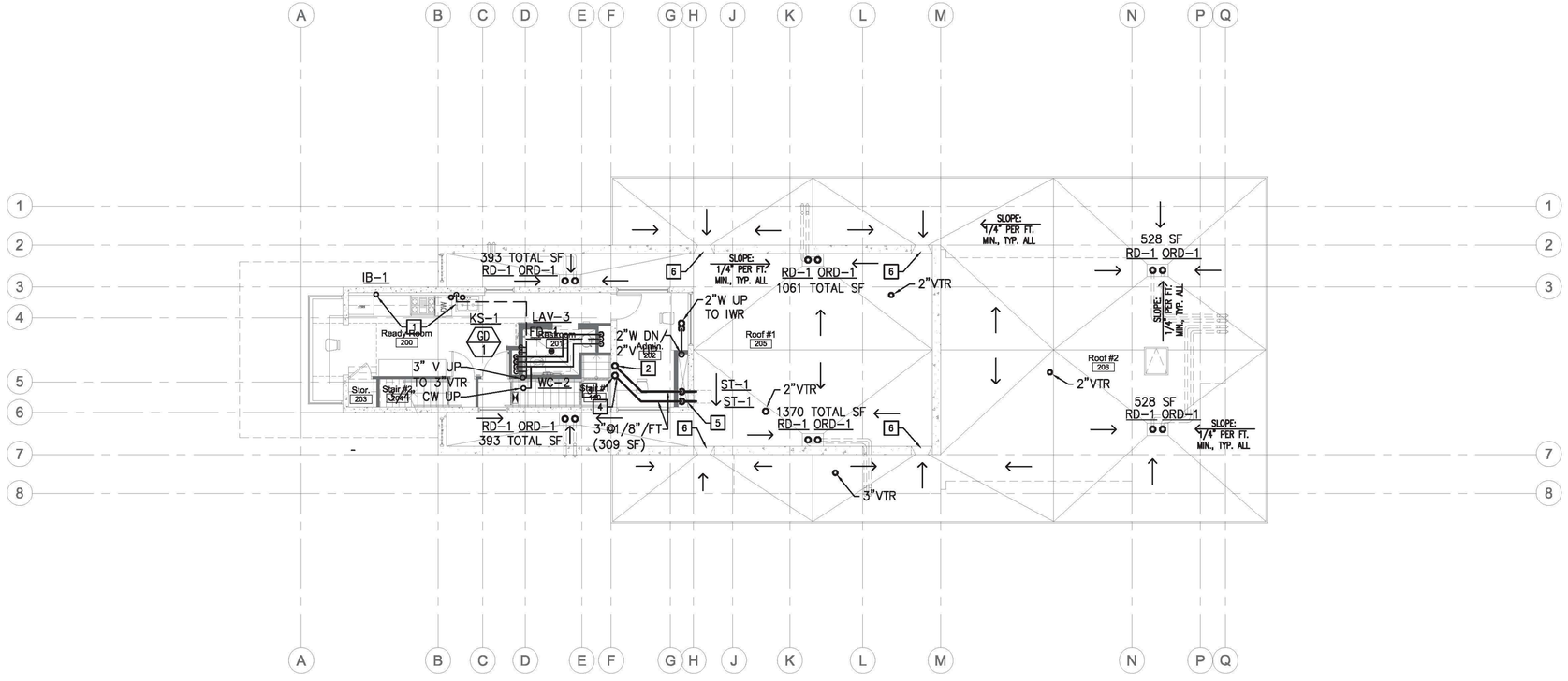

SECOND FLOOR / ROOF PLAN

SECOND FLOOR AND ROOF PLUMBING PLAN

SCALE: _" = 1'-0"

P-4

SPEC. NO. 8147

me engineers
M-E Engineers, Inc.
3760 Convoy St. Suite 340
San Diego CA 92111
t.858.565.3900 / f.858.565.3906
www.me-engineers.com

REGISTERED PROFESSIONAL ENGINEER LAWRENCE A. BROOKS NO.M16665 MECHANICAL STATE OF CALIFORNIA
10/07/14

PLANS FOR THE CONSTRUCTION OF

South Mission Beach Lifeguard Station

SECOND FLOOR & ROOF PLUMBING PLAN | P1.2

CITY OF SAN DIEGO, CALIFORNIA
ENGINEERING & CAPITAL PROJECTS
ARCHITECTURAL ENGINEERING & CONTRACTS DIVISION
SHEET 79 OF 94 SHEETS

WBS S-00791

APPROVED: 10/13/2014
FOR CITY ENGINEER DATE

SUBMITTED BY:
JIHAD SLEIMAN
PROJECT MANAGER

DESCRIPTION	BY	APPROVED	DATE	FILMED
ORIGINAL	L A B			

YOUSIF BENYAMIN
PROJECT ENGINEER

218-1693
CCS27 COORDINATES

1858-6253
CCS83 COORDINATES

CONTRACTOR _____ DATE STARTED _____
INSPECTOR _____ DATE COMPLETED _____

32849-79-D

South Mission Beach Lifeguard Station
San Diego, California

Proprietary design: These drawings and design are protected by common law copyright. All patentable material contained herein and originating with Dominy + Associates Architects @ domusstudio LLP shall be the property of Dominy + Associates Architects @ domusstudio LLP
© COPYRIGHT October 07, 2014 at 2:04PM

Proprietary design: These drawings and design are protected by common law copyright. All patentable material contained herein and originating with Dominy + Associates Architects @ domusstudio LLP shall be the property of Dominy + Associates Architects @ domusstudio LLP

© COPYRIGHT October 07, 2014 at 1:56PM

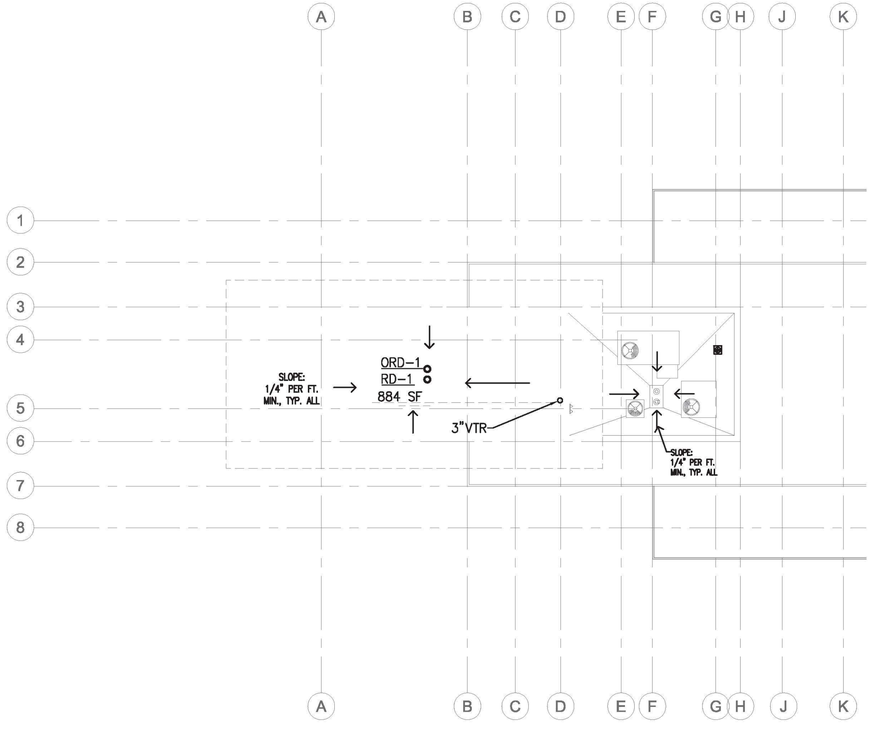

OBSERVATION LEVEL ROOF PLUMBING PLAN

SCALE: _" = 1'-0"

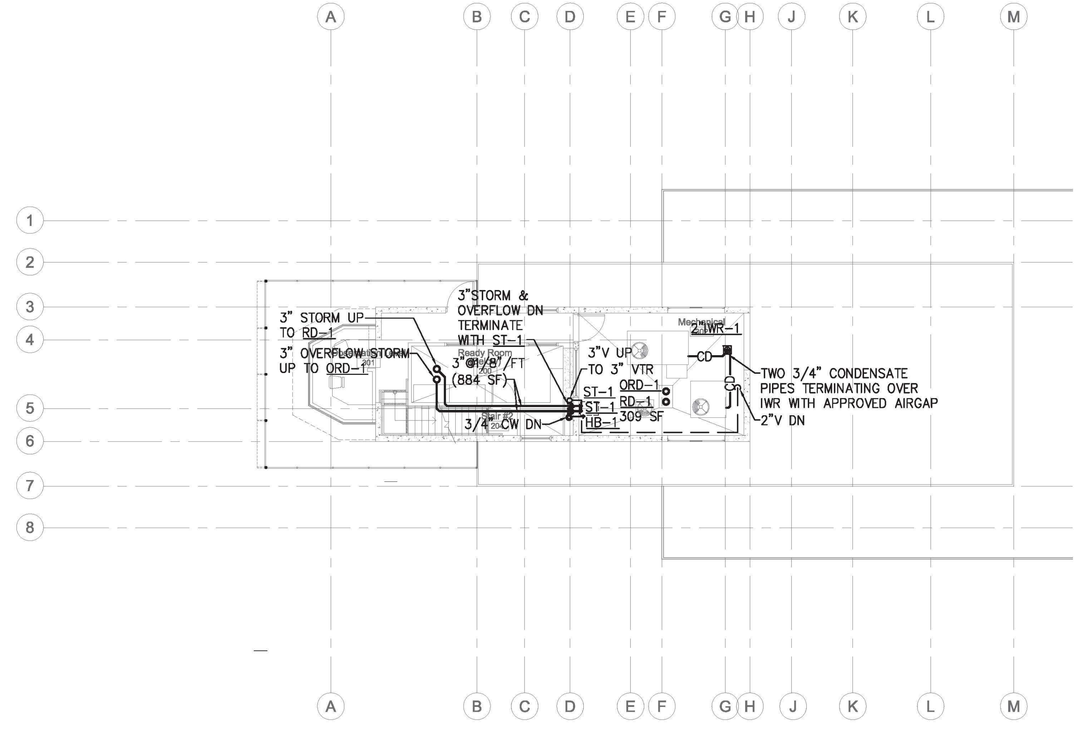

OBSERVATION FLOOR PLUMBING PLAN

SCALE: _" = 1'-0"

P–5

M-E Engineers, Inc.
3760 Convoy St. Suite 340
San Diego CA 92111
t.858.565.3900 / f.858.565.3906
www.me-engineers.com

SPEC. NO. 8147

REGISTERED PROFESSIONAL ENGINEER
LAWRENCE A. BROOKS
NO.M16885
MECHANICAL
STATE OF CALIFORNIA
10/07/14

PLANS FOR THE CONSTRUCTION OF

South Mission Beach Lifeguard Station

OBSERVATION FLOOR AND ROOF PLUMBING PLAN — P1.3

CITY OF SAN DIEGO, CALIFORNIA
ENGINEERING & CAPITAL PROJECTS
ARCHITECTURAL ENGINEERING & CONTRACTS DIVISION
SHEET 80 OF 94 SHEETS

WBS S-00791

FOR CITY ENGINEER — DATE 10/13/2014

SUBMITTED BY:
JIHAD SLEIMAN
PROJECT MANAGER

YOUSIF BENYAMIN
PROJECT ENGINEER

DESCRIPTION	BY	APPROVED	DATE	FILMED
ORIGINAL	L A B			

218–1693
CCS27 COORDINATES

1858–6253
CCS83 COORDINATES

CONTRACTOR _____ DATE STARTED _____
INSPECTOR _____ DATE COMPLETED _____

32849–80–D

Proprietary design: These drawings and design are protected by common law copyright. All patentable material contained herein and originating with Dominy + Associates Architects @ domusestudio LLP shall be the property of Dominy + Associates Architects @ domusestudio LLP

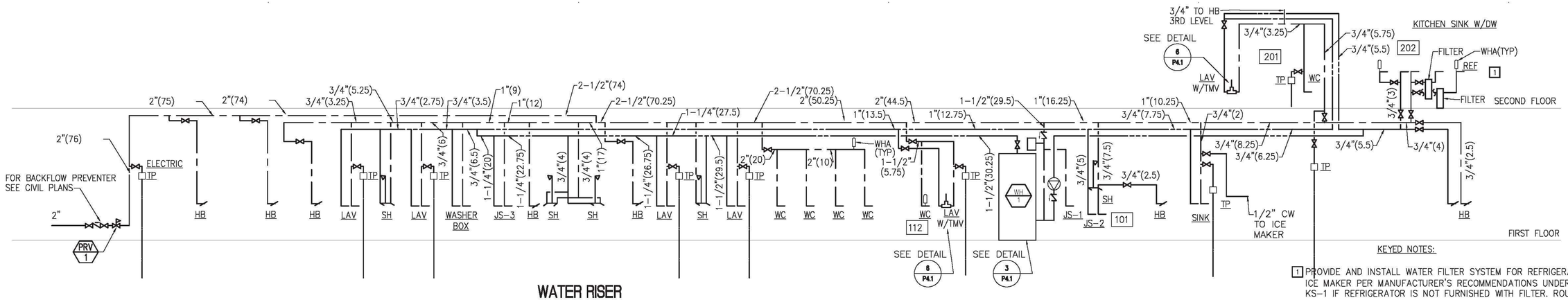

WATER RISER

NO SCALE

KEYED NOTES:

1 PROVIDE AND INSTALL WATER FILTER SYSTEM FOR REFRIGERATOR ICE MAKER PER MANUFACTURER'S RECOMMENDATIONS UNDER SINK KS-1 IF REFRIGERATOR IS NOT FURNISHED WITH FILTER. ROUTE PIPING FROM FILTER TO ICEMAKER BOX

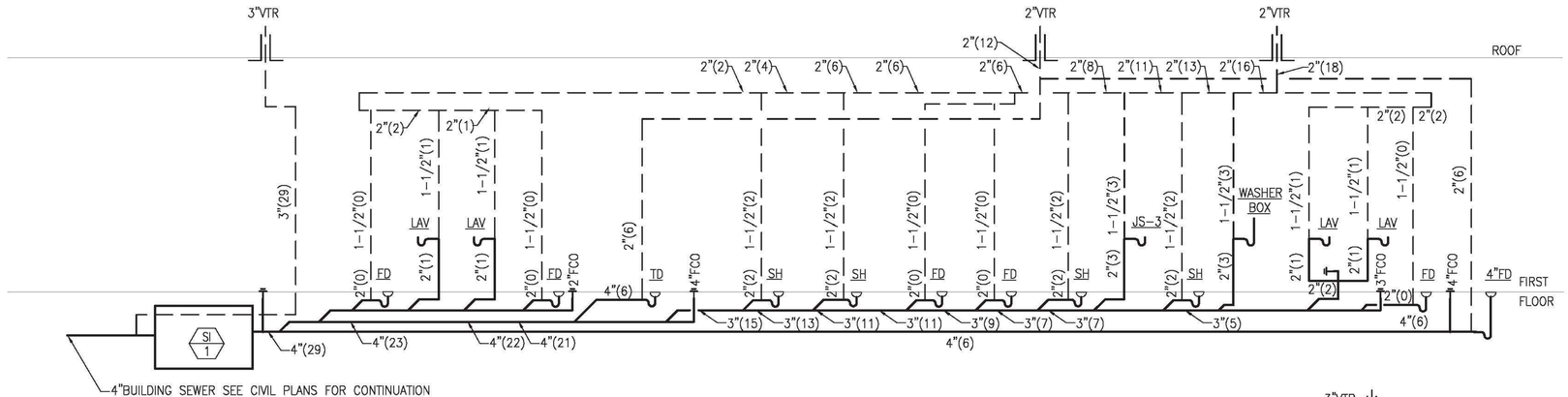

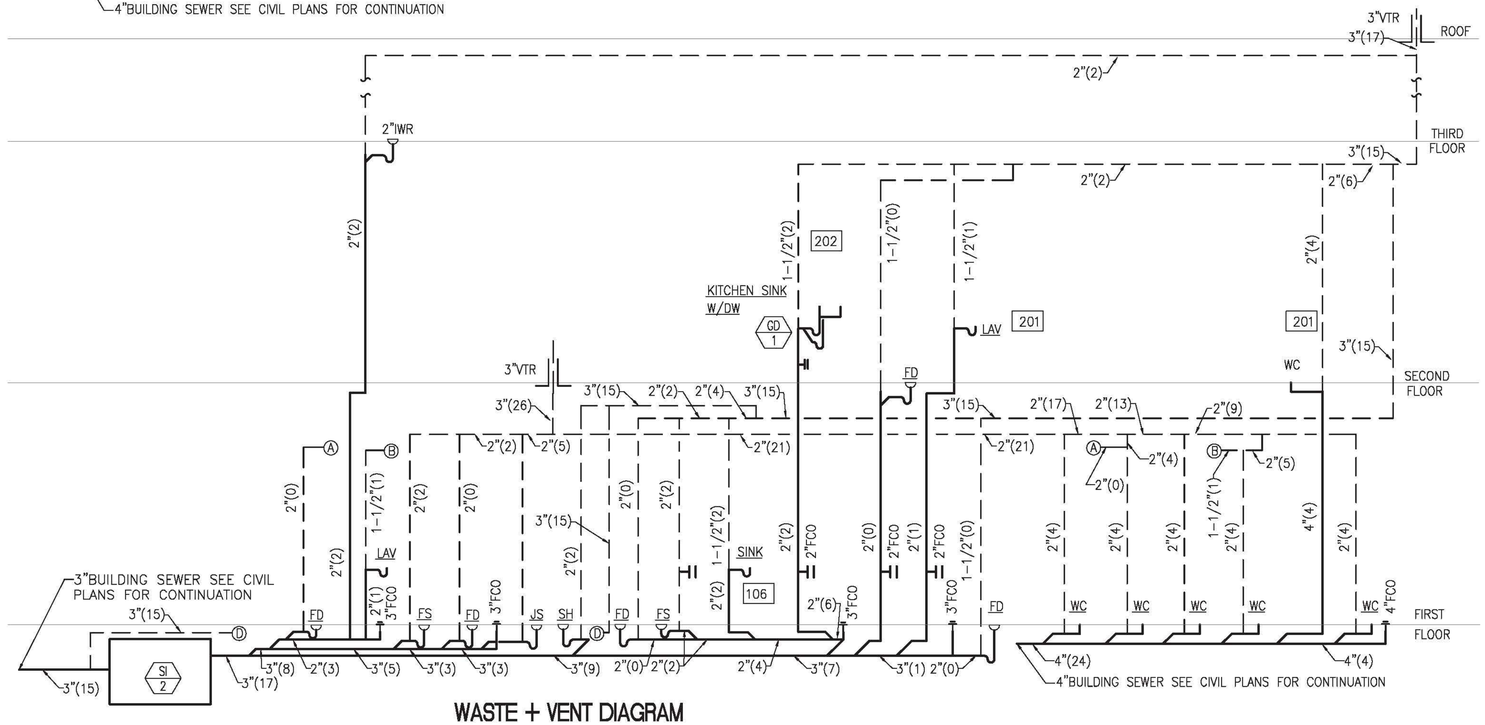

WASTE + VENT DIAGRAM

NO SCALE

DOMESTIC WATER CALCULATIONS

WATER SUPPLY FIXTURES

TYPE	NO.	FU/FT EACH	FU/FT TOTAL	FU/FV EACH	FU/FV TOTAL
TOILETS	6	–	–	6	30
URINALS	0	–	–	–	0
LAVATORIES	6	1	6	–	–
SER. SINK	2	3	6	–	–
SER. SINK FTG	1	3	3	–	–
FIRST AID SINK	1	2	2	–	–
SHOWERS	5	2	10	–	–
KITCHEN SINK	1	1.5	1.5	–	–
DISHWASHER	1	1.5	1.5	–	–
CLOTHESWASHER	1	4	4	–	–
DRINKING FOUN.	0	0.5	0	–	–
HOSE BIBBS	1	2.5	2.5	–	–
HOSE BIBBS*	6	1	6	–	–
ICE MACHINE	1	1	1	–	–
SUBTOTAL	–	–	44.5	–	30

74.5 TOTAL FU'S = 60 GPM

AVAILABLE PRESSURE

HI = 129#, LOW = 119#

BUILDING

PRV SET PRESSURE		70 PSI
PRV FALLOFF		10 PSI
REQUIRED AT LAST FIXTURE		35.0 PSI
ELEVATION HEAD AT .4335 PSI/FT	18 FT	8 PSI
PRESSURE AVAILABLE		17 PSI
DEVELOPED LENGTH	130 FT X 1.5 17 X 100/195	195 FT
AVAILABLE FOR FRICTION LOSS INSIDE BLDG		8.7 PSI

Pipe Size Inches	COLD WATER A GPM	Velocity (fps)	A Flush Tank (SFU)	B Flush Valve (SFU)	HOT WATER GPM	Velocity (fps)	C Flush Tank (SFU)
1/2	3.1	4.3	3.00	0	3.1	4.3	3.00
3/4	8.1	5.4	10.0	0	7.5	5.0	9
1	15.4	6.0	21	0	12.9	5.0	17
1 1/4	23.5	6.0	36	6	19.6	5.0	29
1 1/2	33.3	6.0	60	16	27.7	5.0	46
2	57.9	6.0	160	66	48.2	5.0	119
2 1/2	89.2	6.0	315	186	74.4	5.0	245
3	127.4	6.0	506	396	106.2	5.0	406
4	224.0	6.0	1135	1135	186.6	5.0	840

© COPYRIGHT October 07, 2014 at 1:55PM

South Mission Beach Lifeguard Station
San Diego, California

P–6

SPEC. NO. 8147

me engineers
M-E Engineers, Inc.
3760 Convoy St. Suite 340
San Diego CA 92111
t.858.565.3900 / f.858.565.3906
www.me-engineers.com

REGISTERED PROFESSIONAL ENGINEER LAWRENCE A. BROOKS NO.M16885 MECHANICAL STATE OF CALIFORNIA
10/07/14

PLANS FOR THE CONSTRUCTION OF

South Mission Beach Lifeguard Station

WASTE & VENT DIAGRAM & WATER RISER — P3.1

CITY OF SAN DIEGO, CALIFORNIA
ENGINEERING & CAPITAL PROJECTS
ARCHITECTURAL ENGINEERING & CONTRACTS DIVISION
SHEET 81 OF 94 SHEETS

WBS S-00791

APPROVED: FOR CITY ENGINEER — DATE 10/13/2014

SUBMITTED BY: JIHAD SLEIMAN, PROJECT MANAGER

DESCRIPTION	BY	APPROVED	DATE	FILMED
ORIGINAL	L A B			

YOUSIF BENYAMIN, PROJECT ENGINEER

218-1693 CCS27 COORDINATES

1858-6253 CCS83 COORDINATES

CONTRACTOR _____ DATE STARTED _____
INSPECTOR _____ DATE COMPLETED _____

32849-81-D

Proprietary design: These drawings and design are protected by common law copyright. All patentable material contained herein and originating with Dominy + Associates Architects @ domusstudio LLP shall be the property of Dominy + Associates Architects @ domusstudio LLP

© COPYRIGHT October 07, 2014 at 1:51PM

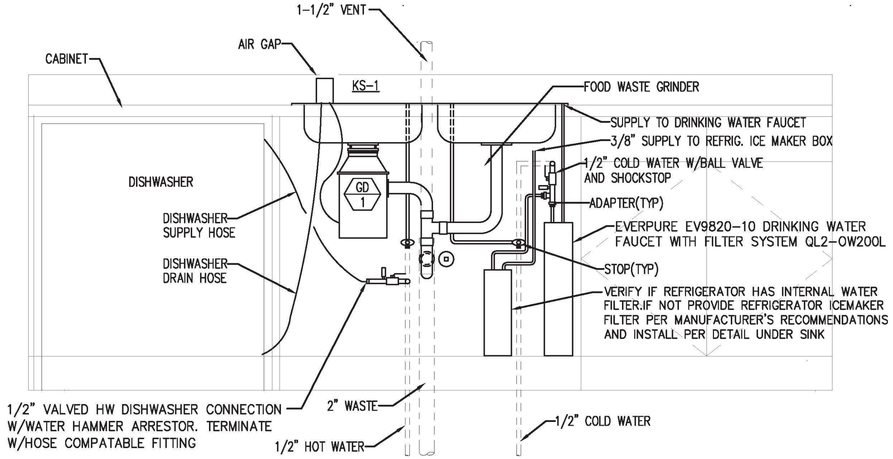

KITCHEN SINK DETAIL

7 / P4-1

NO SCALE

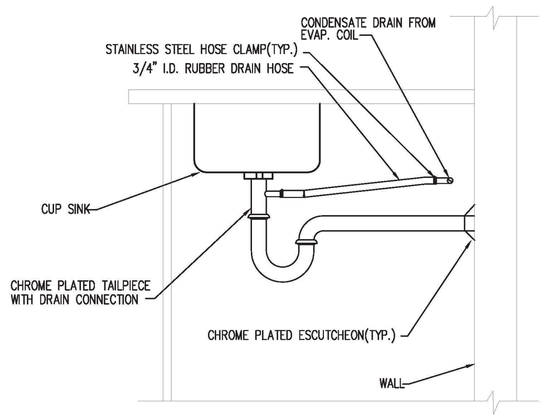

CONDENSATE CONN. TO LAV TAILPIECE

4 / P4-1

NO SCALE

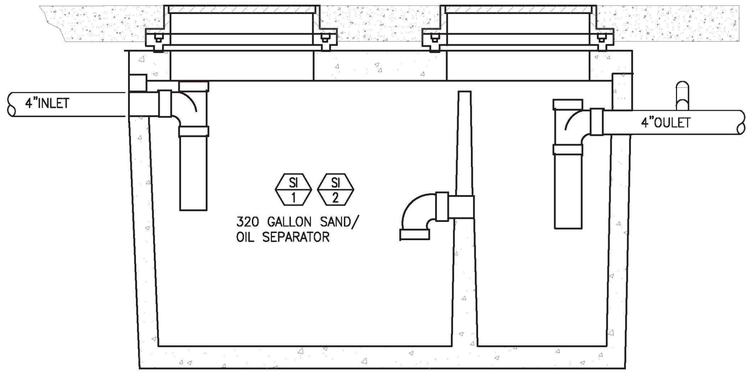

SAND/OIL SEPARATOR

1 / P4-1

NO SCALE

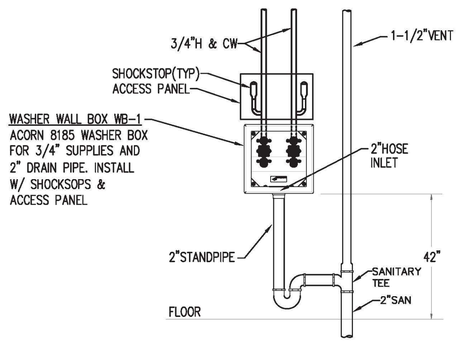

WASHER BOX DETAIL

8 / P4-1

NO SCALE

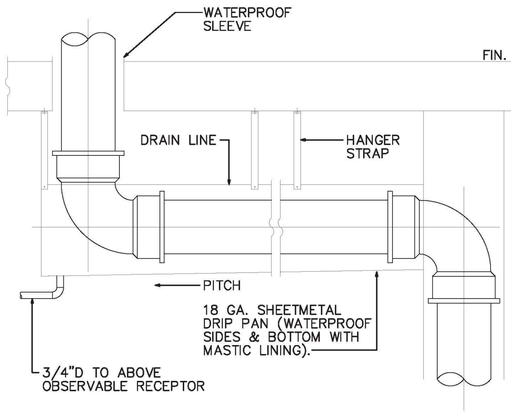

DRAIN PAN DETAIL

5 / P4-1

NO SCALE

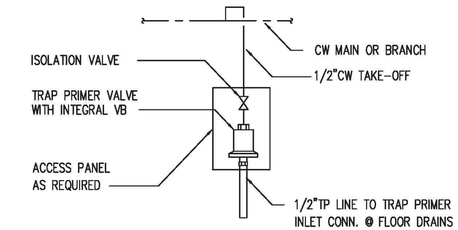

TRAP PRIMER DETAIL

2 / P4-1

NO SCALE

FIXTURES & FITTINGS		WATER CONSUMPTION		WATER
MARK	DESCRIPTION	STANDARD	DESIGN	SAVINGS
WC-1	WATER CLOSET	1.60 GALLONS/MINUTE	1.28 GALLONS/MINUTE	20%
WC-2	WATER CLOSET	1.60 GALLONS/MINUTE	1.28 GALLONS/MINUTE	20%
LAV-1	LAV (METERED)	0.25 GALLONS/CYCLE	0.20 GALLONS/CYCLE	20%
LAV-2	LAVATORY	0.50 GALLONS/MINUTE	0.35 GALLONS/MINUTE	30%
LAV-3	LAVATORY	0.50 GALLONS/MINUTE	0.35 GALLONS/MINUTE	30%
S-1	SINK	2.20 GALLONS/MINUTE	1.80 GALLONS/MINUTE	18%
KS-1	KITCHEN SINK	2.20 GALLONS/MINUTE	1.50 GALLONS/MINUTE	32%
SH-1	SHOWERHEAD	2.50 GALLONS/MINUTE	1.75 GALLONS/MINUTE	30%
SH-2	SHOWERHEAD	2.50 GALLONS/MINUTE	1.75 GALLONS/MINUTE	30%

NOTE:

PLUMBING FIXTURES (WATER CLOSETS AND URINALS) AND FITTINGS (FAUCETS AND SHOWERHEADS) SHALL MEET THE STANDARDS REFERENCED IN TABLE 5.303.6 OF DIVISION 5.3 OF THE 2010 GREEN CODE.

INDOOR WATER USE TABLE

9 / P4-1

NO SCALE

NOTE:

LAV-1 IS SINGLE TEMPERED SUPPLY PUSHBUTTON
LAV-3 -S A SINGLE HANDLE FAUCET REQUIRING A TEMPERED HOT AND A COLD SUPPLY.

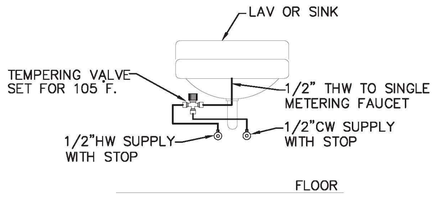

LAVATORY TEMPERING VALVE DETAIL

6 / P4-1

NO SCALE

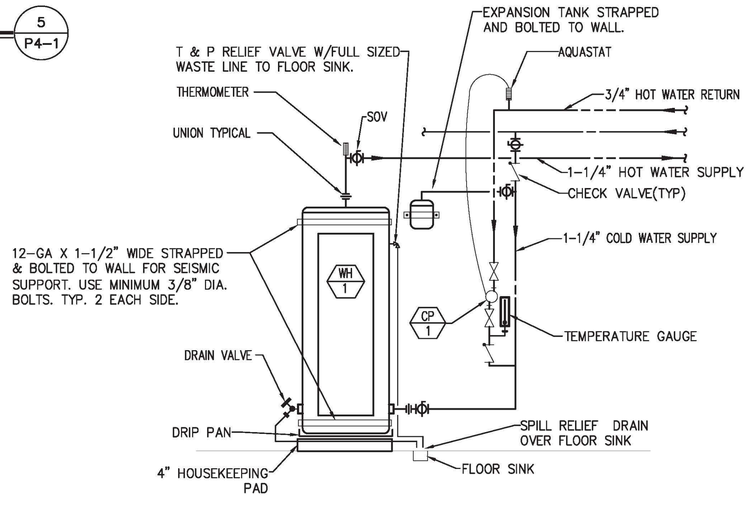

ELECTRIC WATER HEATER DETAIL

3 / P4-1

NO SCALE

P-7

M-E Engineers, Inc.
3760 Convoy St. Suite 340
San Diego CA 92111
t.858.565.3900 / f.858.565.3906
www.me-engineers.com

SPEC. NO. 8147

REGISTERED PROFESSIONAL ENGINEER LAWRENCE A. BOSCHKA NO.M16665 MECHANICAL STATE OF CALIFORNIA
10/07/14

PLANS FOR THE CONSTRUCTION OF

South Mission Beach Lifeguard Station

PLUMBING DETAILS — P4.1

CITY OF SAN DIEGO, CALIFORNIA
ENGINEERING & CAPITAL PROJECTS
ARCHITECTURAL ENGINEERING & CONTRACTS DIVISION
SHEET 82 OF 94 SHEETS

WBS S-00791

APPROVED FOR CITY ENGINEER — DATE 10/13/2014

SUBMITTED BY: JIHAD SLEIMAN, PROJECT MANAGER

DESCRIPTION	BY	APPROVED	DATE	FILMED
ORIGINAL	L A B			

YOUSIF BENYAMIN, PROJECT ENGINEER

218-1693 CCS27 COORDINATES

1858-6253 CCS83 COORDINATES

CONTRACTOR — DATE STARTED
INSPECTOR — DATE COMPLETED

32849-82-D

LIGHTING/SWITCHING SYMBOLS

- LIGHTING CONTROL PANEL, SEE CONTROL DETAIL AND SCHEDULES FOR MORE INFORMATION.
- PUSH BUTTON LOW VOLTAGE OVERRIDE CONTROL SWITCH
- ZONE CONTROLLED (UPPER CASE LETTER DENOTES ZONE CONTROLLED)
- SWITCH LEG CONTROLLED (LOWER CASE LETTER DENOTES SWITCH LEG CONTROLLED)
- sasb — SWITCH, SINGLE POLE 20A, MTD. 48" AFF TO TOP. DESIGNATION TO CONTROL LIGHTING IN CIRCUIT LEGS. DEVICE: WHITE COVERPLATE: WHITE
  2- DOUBLE POLE K - KEYED SWITCH
  3- THREE WAY T - MANUAL MOTOR STARTER WITH THERMAL OVERLOADS
  4- FOUR WAY D - LOAD RATED DIMMER
  PL - PILOT LIGHT PB - PUSHBUTTON
- WALL MOUNTED MOTION CONTROLLED LIGHTING SWITCH WITH INTEGRAL BI-LEVEL SWITCHING. DEVICE - WHITE MTD. 48" AFF TO TOP.
- CEILING MOUNTED ULTRASONIC MOTION SENSOR. DEVICE: WHITE
- WALL MOUNTED DUAL-TECHNOLOGY MOTION SENSOR. DEVICE: WHITE
- 1-100-A — FIXTURE CALLOUT:
  TYPE (SEE LIGHT FIXTURE SCHEDULE)
  WATTAGE
  QUANTITY
- RELAY
- TC — TIME CLOCK
- P — PHOTOCELL
- EPO — EMERGENCY POWER OFF PUSHBUTTON, MOUNTED AT +48" U.O.N.

TEL/DATA SYMBOLS

- DATA OUTLET WITH TRIM RING, PULLSTRING TO ACCESSIBLE CEILING SPACE. +18" A.F.F. TO CENTER.
- TELEPHONE OUTLET WITH TRIM RING, PULLSTRING TO ACCESSIBLE CEILING SPACE. +18" A.F.F. TO CENTER.
- TELECOMMUNICATIONS OUTLET WITH TRIM RING, PULLSTRING TO ACCESSIBLE CEILING SPACE +18" A.F.F. TO CENTER.
- TELECOMMUNICATION OUTLET FLUSH FLOOR MOUNTED ON FIRE RATED POKE-THRU.
- S — SPEAKER BACK BOX LOCATION
- C — INTERCOM J-BOX LOCATION
- EH — ELECTROMAGNETIC DOOR HOLDER
- IC — INTERCOM LOCATION
- CR — CARD READER
- ES — ELECTRIC DOOR STRIKE
- 3/4" FIRE RATED PLYWOOD BACKBOARD WITH #6AWG GROUND TO BUILDING SYSTEM GROUND.
- CABLE TRAY PER PLANS. COORDINATE ROUTING WITH OTHER DISIPLINES.

GENERAL NOTES

1. EXTERIOR LIGHTING SYSTEM SHALL BE EQUIPPED WITH AUTOMATIC TIMING DEVICE AND CONTROL SHUT-OFF BETWEEN 11PM & 6AM UNLESS USING LPS LAMP TYPE LUMINAIRES
2. ALL CONDUITS SHALL BE CONCEALED. IF EXPOSED CONDUITS ARE PROPSED CONTRACTOR SHALL PROVIDE SHOP DRAWINGS INDICATING LAYOUT FOR APPROVAL PEIOR TO INSTALLATION
3. ALL ELECTRICAL DEVICES AND UTILIZATION EQUIPMENT SHALL BE LISTED BY AN APPROVED TESTING AGENCY
4. ALL WORK TO COMPLY WITH THE 2013 EDITION OF THE CALIFORNIA ELECTRICAL CODE
5. USE COPPER CONDUCTORS ONLY
6. THERMOSTATS, SWITCHES AND/OR RECEPTACLES INSTALLED IN RESTROOMS OR OTHER AREAS EQUIPPED FOR THE DISABLED, SHALL BE LOCATED AT NOT TO EXCEED 48" TO TOP OF BOX FROM THE FLOOR.
5. ALL 120V RECEPTACLES IN KITCHEN AREAS SHALL BE GFCI PROTECTED
6. CONTRACTOR IS TO VERIFY MOUNTING HEIGHTS OF ALL DEVICES PRIOR TO MOUNTING
7. VERIFY ROUTING OF ANY SURFACE MOUNTED CONDUITS PRIOR TO INSTALLATION
8. REVIEW ALL PLANS BY OTHER TRADES AND PROVIDE ADDITIONAL WORK AS REQUIRED NOT OUTLINED IN THESE DOCUMENTS
9. COORDINATE ALL DIMMING FLUORESCENT BALLASTS WITH DIMMING SYSTEM, PROVIDE WIRE COUNT AS REQUIRED. USE ADVANCE MARK X BALLASTS.
10. ELECTRICAL CONTRACTOR SHALL PROVIDE MULTI-POLE CIRCUIT BREAKERS WITH COMMON TRIP OR U.L. LISTED HANDLE TIES FOR ALL MULTI-POLE CIRCUITS WITH SHARED NEUTRAL
11. ALL LIGHTING CONTROLS SHALL BE CERTIFIED BY THE MANUFACTURER AND LISTED IN THE ENERGY COMMISSION DIRECTORIES
12. ALL COPPER CONDUCTORS SHOWN ARE TO BE STRANDED
13. ALL RECEPTACLES SHALL BE 20A TAMPERPROOF
14. ALL PANELS AND SWITCHGEAR SHALL BE PROPERLY LABELED AND CONTAIN ARC FLASH POTENTIAL RATING

POWER SYMBOLS

- J — JUNCTION BOX
- WALL MOUNTED JUNCTION BOX.
- DUPLEX RECEPTACLE MTD 18" AFF TO CENTER COVERPLATE COLOR: WHITE

DEVICE TYPE		DEVICE COLOR
STANDARD		WHITE
IG	ISOLATED GROUND	ORANGE
D	DEDICATED 20A RATED	GRAY
UPS	15A OR 20A UPS	GRAY
EM	EMERGENCY	RED

- GFI DUPLEX RECEPTACLE MTD 18" AFF TO CENTER COVERPLATE COLOR: WHITE
- DOUBLE DUPLEX RECEPTACLE MTD 18" AFF TO CENTER, SCHEDULE AS NOTED ABOVE.
- SPLIT WIRED 15A 1/2 HOT, 1/2 SWITCHED OUTLET COLOR: WHITE
- 208V/1Ø RECEPTACLE, NEMA CONFIGURATION AS NOTED.
- 208V/3Ø RECEPTACLE, NEMA CONFIGURATION AS NOTED.
- FLUSH FLOOR MOUNTED DUPLEX RECEPTACLE.
- FLOOR BOX WITH DOUBLE DUPLEX RECEPTACLE AND SINGLE GANG TEL/DATA RECEPTACLE.
- FLOOR BOX WITH DUPLEX RECEPTACLE AND SINGLE GANG TEL/DATA RECEPTACLE.
- SPECIALTY FLOOR BOX PER PLANS MULTIPLE GANG BOX, SEE SPECS.
- PEDESTAL MOUNTED DOUBLE DUPLEX RECEPTACLE MANUF: HUBBELL SA6688 W/STAINLESS STEEL COVERPLATES
- PEDESTAL MOUNTED DUPLEX RECEPTACLE MANUF: HUBBELL#SA6688 W/STAINLESS STEEL COVERPLATES
- ROOF MOUNTED WEATHERPROOF GFI WORK OUTLET. PROVIDE CAST BOX W/STAINLESS STEEL WP COVER.
- EXTERNALLY OPERATED FUSED DISCONNECT SWITCH. PROVDE PER NEMA RATING REQUIRED.
- COMBINATION FVNR MAGNETIC MOTOR STARTER AND DISCONNECT RATING AND POLES AS INDICATED. PROVIDE WITH OVERLOAD PER HORSEPOWER REQUIREMENTS, CPT, H.O.A. WITH PILOT LIGHTS, PROVIDE WITH (1) EACH N.O. AND N.C. AUX CONTACTS.
- FVNR MAGNETIC STARTER WITH OVERLOAD PER HORSEPOWER REQUIREMENTS, CPT, H.O.A. WITH PILOT LIGHTS, PROVIDE WITH (1) EACH N.O. AND N.C. AUX CONTACTS.
- MOTOR PROVIDED BY OTHERS.
- FLUSH MOUNTED PANELBOARD
- SURFACE MOUNTED PANELBOARD
- SURFACE MOUNTED LIGHTING CONTROL PANEL, U.O.N.
- FLUSH MOUNTED LIGHTING DIMMING PANEL, U.O.N.
- FIRE RATED DOULBLE DUPLEX POKE THROUGH, SEE DETAILS FOR MORE INFORMATION.
- FIRE RATED SYSTEMS FURNITURE FEED POKE THROUGH, SEE DETAILS FOR MORE INFORMATION.
- CLOCK HANGER OUTLET ONLY, MOUNTED AT +__" U.O.N.
- TV — TELEVISION SYSTEM OUTLET WITH JACK, WALL MOUNTED AT +12" U.O.N.
- MULTI-OUTLET ASSEMBLY, LENGTH AS INDICATED ON PLANS.
- FLEXIBLE CONDUIT
- WIRING OR CONDUIT CONCEALED IN WALL OR CEILING
- WIRING OR CONDUIT EXPOSED
- WIRING OR CONDUIT CONCEALED UNDERGROUND OR IN FLOOR
- RACEWAY OR WIREWAY ASSEMBLY DOWN
- RACEWAY OR WIREWAY ASSEMBLY UP
- HOMERUN TO PANEL, CIRCUITS AS INDICATED.
- UNDERGROUND HOMERUN TO PANEL, CIRCUITS AS INDICATED.
- CONCEALED EMT CONDUIT WITH THHN WIRE 2#12 AWG 3/4" C. MINIMUM
- CONCEALED EMT CONDUIT WITH THHN WIRE 3#12 AWG 3/4" MINIMUM. CHEVRONS INDICATE #10 CONDUCTORS
- FUSED SWITCH, SEE SINGLE LINE DIAGRAM FOR MORE INFORMATION.
- CIRCUIT BREAKER, SEE SINGLE LINE DIAGRAM FOR MORE INFORMATION.
- TRANSFORMER, SEE SINGLE LINE DIAGRAM FOR MORE INFORMATION.
- CURRENT TRANSFORMER
- AUTOMATIC TRANSFER SWITCH
- GROUNDING ELECTRODE

ABBREVIATIONS

A	AMPERES
AC	ALTERNATING CURRENT
AIC	AMPERES INTERRUPTING CAPACITY
AFF	ABOVE FINISHED FLOOR
AFG	ABOVE FINISHED GRADE
AF	AMP FRAME/AMP FUSE
AL	ALUMINUM
ARCH	ARCHITECT OR ARCHITECTURAL
AS	AMP SWITCH
AT	AMP TRIP
ATS	AUTOMATIC TRANSFER SWITCH
AUX	AUXILIARY
AWG	AMERICAN WIRE GAUGE
BKBD	BACKBOARD
C	CONDUIT WITH WIRE
CATV	CABLE TELEVISION
CCTV	CLOSED CIRCUIT TELEVISION
CB	CIRCUIT BREAKER
CLF	CURRENT LIMITING FUSE
C.O.	CONDUIT ONLY WITH NYLON PULL CORD
CONTR	CONTRACTOR
CU	COPPER
CT	CURRENT TRANSFORMER
CW	COLD WATER
D	DEDICATED OUTLET
DC	DIRECT CURRENT
DF	DRINKING FOUNTAIN
DIA	DIAMETER
DISC	DISCONNECT
DIST	DISTRIBUTION
DWGS	DRAWINGS
EA	EACH
EB	90-MINUTE BATTERY CONNECTED TO UNIT
EC	ELECTRICAL CONTRACTOR
EG	EMERGENCY GENERATOR CONNECTION
EF	EXHAUST FAN
ELECT	ELECTRICAL
ELEV	ELEVATION/ELEVATOR
EMT	ELECTRO-METALLIC TUBING
EXIST	EXISTING
FA	FIRE ALARM
FC	FOOT CANDLE
FIXT	FIXTURE
FLUOR	FLUORESCENT
FT.	FEET OR FOOT
GC	GENERAL CONTRACTOR
GD	GARBAGE DISPOSAL
GEN	GENERATOR
GFI	GROUND FAULT INTERRUPTER
GFR	GROUND FAULT RELAY
GRD	GROUND
H	HORIZONTAL
HID	HIGH INTENSITY DISCHARGE
HP	HORSEPOWER
HPS	HIGH PRESSURE SODIUM
HR	HOUR
HT	HEIGHT
HZ	HERTZ
IG	ISOLATED GROUND BUS OR WIRE
IMC	INTERMEDIATE METAL CONDUIT
INCAND	INCANDESCENT
J-BOX	JUNCTION BOX
KVA	KILO-VOLTAMPERE
KW	KILO-WATT
KWH	KILOWATT-HOUR
LF	LINEAL FEET
LTG	LIGHTING
LV	LOW VOLTAGE
MANUF	MANUFACTURER
MAX	MAXIMUM
MC	MECHANICAL CONTRACTOR
MCC	MOTOR CONTROL CENTER
MECH	MECHANICAL
MIN	MINIMUM
MH	METAL HALIDE
MLO	MAIN LUGS ONLY
MTG	MOUNTING
MV	MERCURY VAPOR
N	NEUTRAL
NEC	NATIONAL ELECTRIC CODE
NIC	NOT IN CONTRACT
NL	NIGHT LIGHT
NTS	NOT TO SCALE
OC	ON CENTER
OFCI	OWNER FURNISHED CONTRACTOR INSTALLED
OFOI	OWNER FURNISHED OWNER INSTALLED
P	PEDESTAL MOUNT
PB	PULL BOX
PC	PHOTOCELL CONTROL
PCTC	PHOTOCELL/TIMECLOCK CONTROL
PH	PHASE
PIV	POST INDICATING VALVE
PL	PILOT LIGHT
PVC	POLYVINYL CHLORIDE
PWR	POWER
PP	POWER POLE
QR	FIXTURE WITH QUARTZ RESTRIKE
QTY	QUANTITY
RECEPT	RECEPTACLE
REF	REFRIGERATOR
RGS	RIGID GALVANIZED STEEL
SD	SMOKE DETECTOR
SPEC	SPECIFICATION
SQ FT	SQUARE FEET OR SQUARE FOOT
SW	SWITCH
SWBD	SWITCHBOARD
TEMP	TEMPERATURE OR TEMPORARY
TV	TELEVISION
TEL, TELE	TELEPHONE
TC	TIME CLOCK
TRANSF	TRANSFORMER
TYP	TYPICAL
UGPS	UNDERGROUND PULL SECTION
UL	UNDERWRITERS LABORATORIES
UNO	UNLESS NOTED OTHERWISE
UPS	UNINTERRUPTIBLE POWER SUPPLY
V	VOLTS
VA	VOLT-AMPERE
WH	WATER HEATER
WP XFMR	WEATHER PROOF TRANSFORMER

E-1

SPEC. NO. 8147

KRUSE & ASSOCIATES
LIGHTING AND ELECTRICAL DESIGN
10045 WORLD TRADE DRIVE, SUITE A SAN DIEGO, CA 92128
P. 858.676.9776 F. 858.676.9744 WWW.KRUSEASSOC.NET

REGISTERED PROFESSIONAL ENGINEER — GERALD L. KRUSE — No. E011569 — Exp. 06-30-14 — ELECTRICAL — STATE OF CALIFORNIA

PLANS FOR THE CONSTRUCTION OF

South Mission Beach Lifeguard Station

Symbols List — E0.1

CITY OF SAN DIEGO, CALIFORNIA
ENGINEERING & CAPITAL PROJECTS
ARCHITECTURAL ENGINEERING & CONTRACTS DIVISION
SHEET 83 OF 94 SHEETS

WBS S-00791

APPROVED: _____ FOR CITY ENGINEER — DATE 10/13/2014

SUBMITTED BY: JIHAD SLEIMAN, PROJECT MANAGER

DESCRIPTION	BY	APPROVED	DATE	FILMED
ORIGINAL	KNK			

YOUSIF BENYAMIN, PROJECT ENGINEER
218-1693
CCS27 COORDINATES
1858-6253
CCS83 COORDINATES

CONTRACTOR _____ DATE STARTED _____
INSPECTOR _____ DATE COMPLETED _____

32849-83-D

© COPYRIGHT October 14, 2014 at 3:29PM
Proprietary design: These drawings and design are protected by common law copyright. All patentable material contained herein and originating with Dominy + Associates Architects @ domusstudio LLP shall be the property of Dominy + Associates Architects @ domusstudio LLP

Proprietary design. These drawings and design are protected by common law copyright. All patentable material contained herein and originating with Dominy + Associates Architects @ domusstudio LLP shall be the property of Dominy + Associates Architects @ domusstudio LLP

VOLTAGE 120/208 | PHASE 3 | WIRE 4 | A.I.C. 42,000 | PANEL "A" | LOCATION ELECTRIC ROOM | FEEDER SEE SINGLE LINE | MOUNTING SURFACE | MAINS LUGS ONLY | BUSSING 225A | FEED BOTTOM

LOCATION	WATTAGE ØA	ØB	ØC	LTG	REC	MIS	BKR	CIR	Ø	CIR	BKR	MIS	REC	LTG	WATTAGE ØA	ØB	ØC	LOCATION	
FIRST AID	1000				3		20	1	A	2	20		2		500			TTB	
ACCESS CONTROL		500				1	20	3	B	4	30/2		1			2250		DRYER	
MISC. RECEPT.			720		3		20	5	C	6	"		"				2250	- - -	
GARAGE	1000				2		20	7	A	8	20		1		1200			TOILET	
GARAGE		1000			2		20	9	B	10	20		1			1200		WASHER	
T-24, ELECT.			700		1	1	20	11	C	12	20	1					1000	STORAGE	
LOCKER	1200				2		20	13	A	14	20		3		600			WATCH ROOM	
LOCKER		1200			2		20	15	B	16	20		3			1200		TOILETS	
REFRIGERATOR			1400		1		20	17	C	18	20		1				900	GARB DISP.	
READY ROOM	1500				2		20	19	A	20	20		1		1300			DISHWASHER	
CLOSET		1000			4		20	21	B	22	20		1			1500		READY ROOM	
OVEN			5000		1		50/2	23	C	24	20		1				1500	READY ROOM	
- - -	5000				"		/2	25	A	26	20			9	126			EXTERIOR	*
OBSERVATION		1000			2		20	27	B	28	20			23		1154		GARAGE, LOCKER, 48	*
OBSERVATION			1000		2		20	29	C	30	20	1		20			540	LOCKER, RECEPTION	*
SIGN	1000					1	20	31	A	32	20			12	624			FIRST AID, STORAGE	*
EF-4 & 5		220				2	15	33	B	34	20	1		20		240		READY ROOM, OBSER.	*
MICROWAVE			1500		1		20	35	C	36	20		1				700	ICE MACHINE	
SPACE ONLY	--						0	37	A	38	20				--			SPARE	
SPACE ONLY		--					0	39	B	40	20			1		15		FLAG POLE	*
SPACE ONLY			--				0	41	C	42	0						--	SPACE ONLY	
SUBTOTAL	10700	4920	10820												4350	7559	6940		

TOTAL ØA 15050 | ØB 12479 | ØC 17760

TOTAL LOAD 45289 | WATTS AT 120/208 V.,3Ø, 4W.= 125.7 A.

HIGH PHASE 17760 | WATTS AT 120 V.,1Ø, 2W.= 148.0 A. | DATE 03/05/14

* = ROUTE CIRCUIT THROUGH T-24 CONTROL PANEL

○ = INTERLOCK WITH RTU-1

VOLTAGE 120/208 | PHASE 3 | WIRE 4 | A.I.C. 42,000 | PANEL "B" | LOCATION ELECTRIC ROOM | FEEDER SEE SINGLE LINE | MOUNTING SURFACE | MAINS LUGS ONLY | BUSSING 225A | FEED BOTTOM

LOCATION	WATTAGE ØA	ØB	ØC	LTG	REC	MIS	BKR	CIR	Ø	CIR	BKR	MIS	REC	LTG	WATTAGE ØA	ØB	ØC	LOCATION
EAH-1	550					1	15/1	A	2	15/1					799			CU-1
- - -		550				"	/2	3	B	4	/2	"				799		- - -
FC-1			241			1	15/1	5	C	6	30/2	"					1972	RTU-1
- - -	241					"	/2	7	A	8	/2	"			1972			- - -
CP-1		55				1	15	9	B	10	30/2	1				2038		RTU-2
EF-6			121			1	15	11	C	12	/2	"					2038	- - -
DRYER	1200				1		20	13	A	14	20		1		1200			GARAGE DOOR
FIRE RISER		500				2	20	15	B	16	20		1			1200		GARAGE DOOR
RECEPTION			1000		2		20	17	C	18	0						--	SPACE ONLY
TV	450				1		20	19	A	20	0				--			SPACE ONLY
SF-1		700				1	15	21	B	22	0					--		SPACE ONLY
EXTERIOR			1000		3		20	23	C	24	0						--	SPACE ONLY
FACP	1000						20	25	A	26	0				--			SPACE ONLY
SPACE ONLY		--					0	27	B	28	0					--		SPACE ONLY
SPACE ONLY			--				0	29	C	30	0						--	SPACE ONLY
SPACE ONLY	--						0	31	A	32	0				--			SPACE ONLY
SPACE ONLY		--					0	33	B	34	0					--		SPACE ONLY
SPACE ONLY			--				0	35	C	36	0						--	SPACE ONLY
SPACE ONLY	--						0	37	A	38	0				--			SPACE ONLY
SPACE ONLY		--					0	39	B	40	0					--		SPACE ONLY
SPACE ONLY			--				0	41	C	42	0						--	SPACE ONLY
SUBTOTAL	3491	1805	2412												3971	4037	4010	

TOTAL ØA 7462 | ØB 5842 | ØC 6422

TOTAL LOAD 19726 | WATTS AT 120/208 V.,3Ø, 4W.= 54.8 A.

HIGH PHASE 7462 | WATTS AT 120 V.,1Ø, 2W.= 62.2 A. | DATE 03/05/14

☐ = ROUTE CIRCUIT THROUGH T-24 CONTROL PANEL.

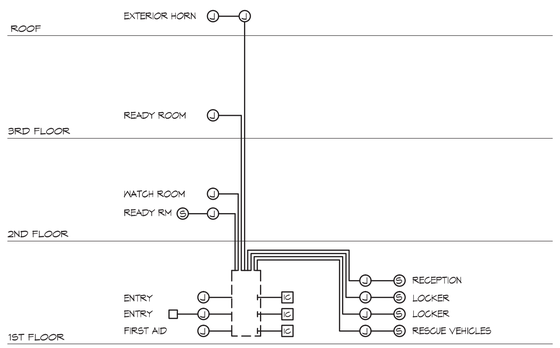

PA/INTERCOM RISER DIAGRAM

NO SCALE

LIGHT FIXTURE SCHEDULE

FIXTURE TYPE	FIXTURE SYMBOL	MANUFACTURER	CATALOG NUMBER	WATTS	VOLTS	MTG	LAMP TYPE	BUG	REMARKS
A		KENALL LIGHTING	MLHA12-4B-R-CC-CP-1-45135K-DCC-1-120	50	120	CS	50W 35K LED	-	
B		PRESCOLITE	LF6LEDG4-6FLED764-35K-WT	26	120	CR	26W 35K LED	-	
C		KENALL LIGHTING	MLA813-PAN-AS-LG-1-14L35K-120	14	120	WS	14W 35K LED 1000 LUMENS	-	
D		KENALL LIGHTING	MS11FL-PP-CC-20L35K-1-DCC	20	120	CS	20W 35K LED	-	
E		ALKCO	LINCS 100 L28-120-WHG-35K-CSJT-3	9	120	UC	9W 35K LED	-	
F		BK LIGHTING	B-HP2-LED-TR-X22-SP-MAC-D15-120	15	120	G	15W LED	-	
G		DESIGN PLAN	LD6-L-1F-4-SS-1-G-G	6	120	CR	6W LED	-	
H		COLUMBIA	LTRE22-35KHL-RFA-ED-U	40	120	CR	40W 35K LED	-	
J		CONTRAST	HEXDL-01-MG-35-80-M NM-HEX- 120-D2-P2	30	120	CR	30W LED	-	
K		LUMIUM	H1-CS-D-LED-5W-35K-4-U-SD-SC-MF-XX-SW-SS-W-4-WF	20	120	CS	20W 35K LED	-	

MOUNTING TYPES:

WS-WALL SURFACE, WR-WALL RECESSED, CS-CEILING SURFACE, CR-CEILING RECESSED, CH-CHAIN, PN-PENDANT, U-UNIVERSAL, G-GROUND, P-POLE, UC-UNDER CABINET, T-TRACK, CB-CABLE, TR-TRELLIS, C-COVE

GENERAL NOTES

EXTERIOR FIXTURES SHALL BE POWDER COATED ALUMINUM AND CONTAIN A POLY-CARBONITE LENS

FIXTURE TYPE "A"

FIXTURE TYPE "B"

FIXTURE TYPE "C"

FIXTURE TYPE "D"

FIXTURE TYPE "E"

FIXTURE TYPE "F"

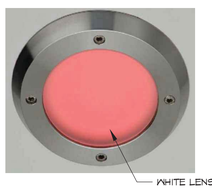

FIXTURE TYPE "G"

FIXTURE TYPE "H"

FIXTURE TYPE "J"

FIXTURE TYPE "K"

E-2

KRUSE & ASSOCIATES
LIGHTING AND ELECTRICAL DESIGN
10245 WORLD TRADE DRIVE, SUITE A SAN DIEGO, CA 92128
P. 858.676.9776 F. 858.676.9744 WWW.KRUSEASSOC.NET

SPEC. NO. 8147

REGISTERED PROFESSIONAL ENGINEER GERALD L. KRUSE No. E011569 Exp. 06-30-14 ELECTRICAL STATE OF CALIFORNIA

PLANS FOR THE CONSTRUCTION OF

South Mission Beach Lifeguard Station

Fixture Schedule & Panels | E0.2

CITY OF SAN DIEGO, CALIFORNIA
ENGINEERING & CAPITAL PROJECTS
ARCHITECTURAL ENGINEERING & CONTRACTS DIVISION
SHEET 84 OF 94 SHEETS

WBS S-00791

APPROVED: FOR CITY ENGINEER | DATE 10/13/2014

SUBMITTED BY: JIHAD SLEIMAN, PROJECT MANAGER

DESCRIPTION	BY	APPROVED	DATE	FILMED
ORIGINAL	KNK			

YOUSIF BENYAMIN, PROJECT ENGINEER

218-1693, CCS27 COORDINATES

1858-6253, CCS83 COORDINATES

CONTRACTOR | DATE STARTED

INSPECTOR | DATE COMPLETED

32849-84-D

© COPYRIGHT October 14, 2014 at 3:20PM

Proprietary design: These drawings and design are protected by common law copyright. All patentable material contained herein and originating with Dominy + Associates Architects @ domusstudio LLP shall be the property of Dominy + Associates Architects @ domusstudio LLP

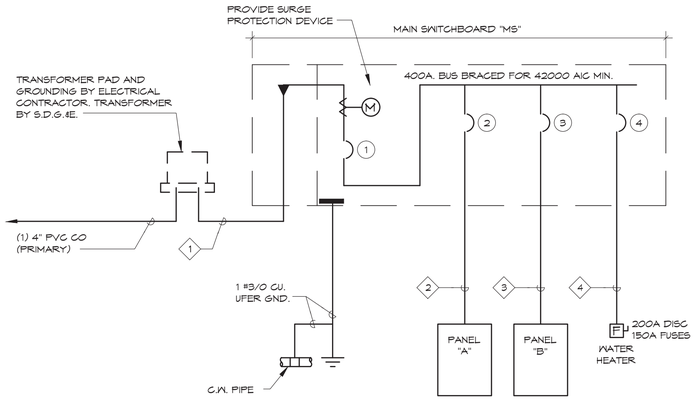

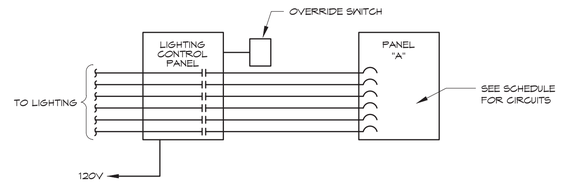

LIGHTING CONTROL DIAGRAM

NO SCALE

SINGLE LINE DIAGRAM - NO SCALE

FEEDER SCHEDULE

DEVICE NUMBER	C.B. OR S.W. SIZE	FUSE SIZE	FUSE TYPE	FEEDER NUMBER	CONDUITS & CONDUCTORS							
					CONDUIT TYPE	CONDUIT SIZE	CNDCTR. QUANTITY	CNDCTR. SIZE	CNDCTR. TYPE	GND. CU.	LENGTH	O/O V.D.
(1)	400A3P	-	-	◇1	PVC.	4"	-	-	-	-	-	-
(2)	200A3P	-	-	◇2	PVC.	2"	4	3/0	CU.	6	-	-
(3)	100A3P	-	-	◇3	PVC.	2"	4	2	CU.	8	-	-
(4)	150A3P	-	-	◇4	PVC.	1 1/2"	3	1/0	CU.	6	-	-

SINGLE LINE DIAGRAM NOTES

1. VERTICAL BUS MAY BE TAPERED TO NOT LESS THAN 1/3 THE AMPACITY RATING OF THE MAIN HORIZONTAL BUS.
2. HORIZONAL AND VERTICAL BUS SHALL BE FULL LENGTH, AND BE RATED NO LESS THAN THE NOTED AIC RATED VALUE.
3. CONTRACTOR SHALL SUBMIT SWITCHBOARD SHOP DRAWINGS TO THE SERVING UTILITY FOR APPROVAL PRIOR TO FABRICATION. SWITCHBOARD SHALL COMPLY WITH SDG&E REQUIREMENTS.
4. CONTRACTOR TO SUBMIT 1/4" PLAN TO ENGINEER OF PROPOSED SWITCHGEAR LAYOUT TO CONFORM WITH MANUFACTURER'S SHOP DRAWINGS. SHOP DRAWING TO BE SUBMITTED AND APPROVED PRIOR TO UNDERGROUND ROUGH-IN.
5. ALL CONDUCTORS FEEDING PANELBOARDS SHALL BE COPPER TYPE 'THWN' WITH EMT CONDUIT. BRANCH CIRCUIT AND FEEDER CABLES IN ALL SIZES SHALL HAVE 'THW', 'THHN' OR 'THWN' INSULATION WITH EMT CONDUIT. AC CABLE IS NOT ALLOWED TO BE INSTALLED. A EQUIPMENT GROUND CONDUCTOR SHALL BE IN ALL FLEXIBLE CONDUITS. 'XHHW' TO BE USED AT ALL EXTERIOR LOCATION PANEL FEEDERS.
6. ALL EQUIPMENT SHOWN IS NEW UNLESS NOTED OTHERWISE.
7. ALL TERMINATION LUGS OF PANELS AND SWITCHBOARDS TO BE RATED TO ACCEPT 75 DEGREE CONDUCTORS.
8. THE CONTRACTOR SHALL PROVIDE A SERIES RATED SYSTEM TO ENSURE THAT ALL ELECTRICAL COMPONENTS OF THIS SYSTEM EXCEED THE MAXIMUM SHORT CIRCUIT WITHSTAND RATING AVAILABLE. PROVIDE ENGRAVED PHENOLIC NAMEPLATES ON ALL SWITCHBOARDS AND PANELBOARDS TO DENOTE THE USE OF SERIES RATED DEVICES. OVERCURRENT DEVICE ENCLOSURES WILL BE IDENTIFIED AS SERIES-RATED AND LABELED IN ACCORDANCE WITH NEC 110-22. THE OVERCURRENT DEVICES SHALL BE AIC RATED PER MANUFACTURERS' LABELING OF THE ELECTRICAL EQUIPMENT.
9. ALL MAIN SERVICE CIRCUIT BREAKERS SHALL BE 100% RATED.
10. FOR ALL PANELBOARDS SUPPLYING FIRE ALARM EQUIPMENT, PROVIDE LOCKABLE COVER, INDENTIFIED CIRCUIT BREAKER (RED), AND A BREAKER 'LOCK-OFF' DEVICE.

LOAD SUMMARY

PANEL "A"	46368 W.
PANEL "B"	20493 W.
WATER HEATER	45000 W.

111861 W. = 310.7 AMPS @ 120/208V., 3Ø., 4W.

E-3

KRUSE & ASSOCIATES
LIGHTING AND ELECTRICAL DESIGN
10045 WORLD TRADE DRIVE, SUITE A SAN DIEGO, CA 92128
P. 858.676.9776 F. 858.676.9744 WWW.KRUSEASSOC.NET

SPEC. NO. 8147

REGISTERED PROFESSIONAL ENGINEER
GERALD L. KRUSE
CIVIL No. E011569
Exp. 06-30-14
ELECTRICAL
STATE OF CALIFORNIA

PLANS FOR THE CONSTRUCTION OF

South Mission Beach Lifeguard Station

Single Line Diagram — E0.3

CITY OF SAN DIEGO, CALIFORNIA
ENGINEERING & CAPITAL PROJECTS
ARCHITECTURAL ENGINEERING & CONTRACTS DIVISION
SHEET 85 OF 94 SHEETS

WBS S-00791

APPROVED: _____ FOR CITY ENGINEER — DATE 10/13/2014

SUBMITTED BY: JIHAD SLEIMAN, PROJECT MANAGER

DESCRIPTION	BY	APPROVED	DATE	FILMED
ORIGINAL	KNK			

YOUSIF BENYAMIN, PROJECT ENGINEER
218-1693
CCS27 COORDINATES
1858-6253
CCS83 COORDINATES

CONTRACTOR _____ DATE STARTED _____
INSPECTOR _____ DATE COMPLETED _____

32849-85-D

© COPYRIGHT October 14, 2014 at 3:29PM

Proprietary design: These drawings and design are protected by common law copyright. All patentable material contained herein and originating with Dominy + Associates Architects @ domusstudio LLP shall be the property of Dominy + Associates Architects @ domusstudio LLP

© COPYRIGHT October 14, 2014 at 3:29PM

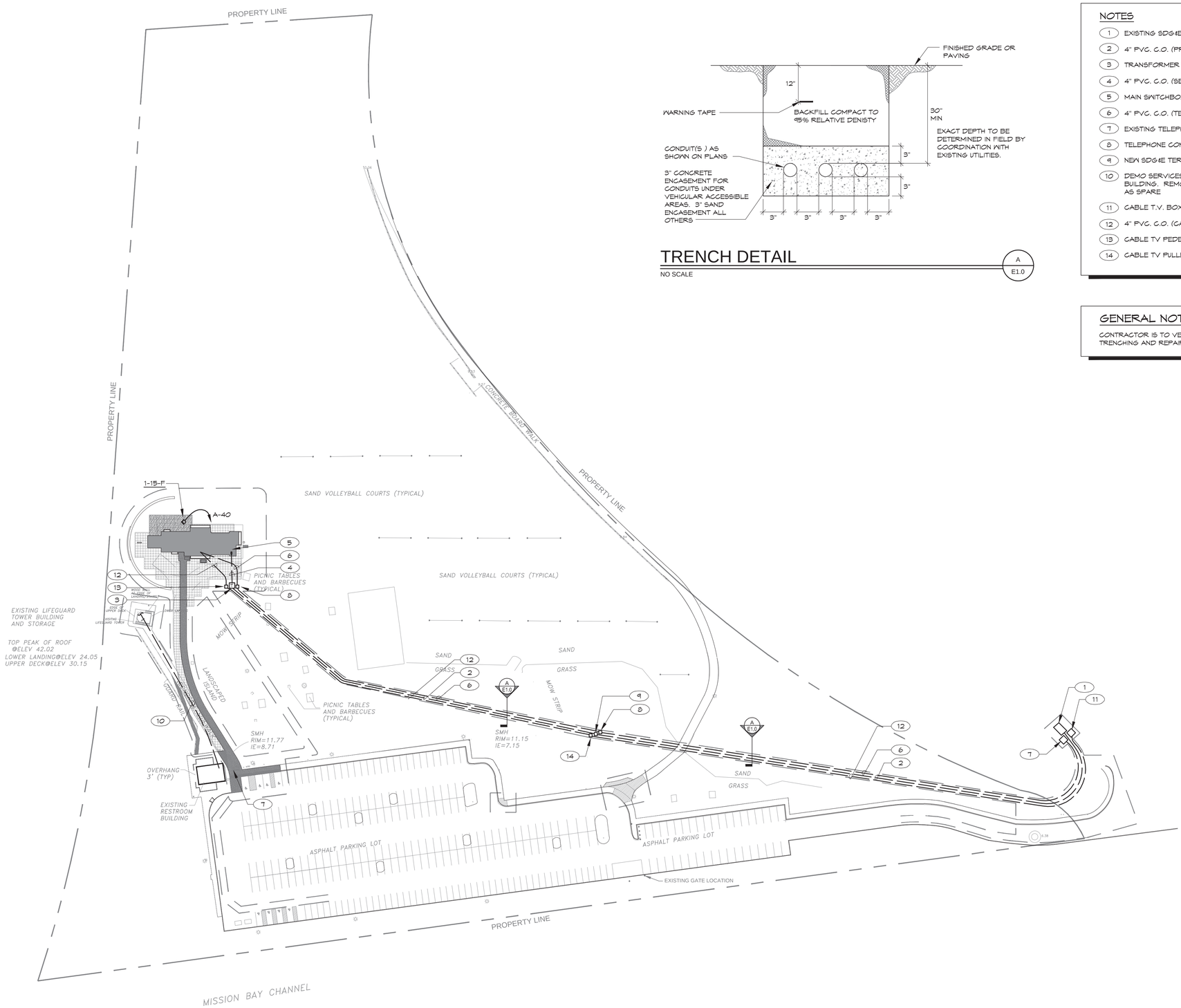

SITE ELECTRICAL PLAN

0' 10' 30' 60' 120'

SCALE: 1" = 60'

TRENCH DETAIL

NO SCALE

A / E1.0

NOTES

1. EXISTING SDG&E HAND HOLE
2. 4" PVC. C.O. (PRIMARY) CONCRETE ENCASED.
3. TRANSFORMER BY SDG&E CO. PAD AND GROUNDING BY ELECTRICAL CONTRACTOR.
4. 4" PVC. C.O. (SECONDARY) CONCRETE ENCASED
5. MAIN SWITCHBOARD "MS" 400A 120/208V3Ø
6. 4" PVC. C.O. (TELEPHONE)
7. EXISTING TELEPHONE COMPANY PULLBOX.
8. TELEPHONE COMPANY PULLBOX/PEDESTAL
9. NEW SDG&E TERMINATOR CABINET
10. DEMO SERVICES TO EXISTING LIFEGUARD STATION UPON COMPLETION OF NEW BUILDING. REMOVE CONDUCTORS, LABEL FEED BREAKER IN EXISTING RESTROOMS AS SPARE
11. CABLE T.V. BOX, VERIFY EXACT LOCATION
12. 4" PVC. C.O. (CABLE TV)
13. CABLE TV PEDESTAL
14. CABLE TV PULLBOX

GENERAL NOTES

CONTRACTOR IS TO VERIFY ROUTING OF CONDUITS ON SITE WITH CITY REP. PROVIDE ALL TRENCHING AND REPAIR ALL SERVICES TO ORIGINAL FINISH

E-4

SPEC. NO. 8147

KRUSE & ASSOCIATES
LIGHTING AND ELECTRICAL DESIGN
10045 WORLD TRADE DRIVE, SUITE A SAN DIEGO, CA 92126
T: 858.676.9776 F: 858.676.9744 WWW.KRUSEASSOC.NET

REGISTERED PROFESSIONAL ENGINEER
GERALD L. KRUSE
No. E015691
Exp. 06-30-14
ELECTRICAL
STATE OF CALIFORNIA

PLANS FOR THE CONSTRUCTION OF

South Mission Beach Lifeguard Station

Site Plan - Electrical

E1.0

CITY OF SAN DIEGO, CALIFORNIA
ENGINEERING & CAPITAL PROJECTS
ARCHITECTURAL ENGINEERING & CONTRACTS DIVISION
SHEET 86 OF 94 SHEETS

WBS S-00791

APPROVED: _____ FOR CITY ENGINEER

DATE 10/13/2014

SUBMITTED BY:
JIHAD SLEIMAN
PROJECT MANAGER

DESCRIPTION	BY	APPROVED	DATE	FILMED
ORIGINAL	KNK			

YOUSIF BENYAMIN
PROJECT ENGINEER

218-1693

CCS27 COORDINATES

1858-6253

CCS83 COORDINATES

CONTRACTOR _____ DATE STARTED _____
INSPECTOR _____ DATE COMPLETED _____

32849-86-D

Proprietary design: These drawings and design are protected by common law copyright. All patentable material contained herein and originating with Dominy + Associates Architects @ domusstudio LLP shall be the property of Dominy + Associates Architects @ domusstudio LLP

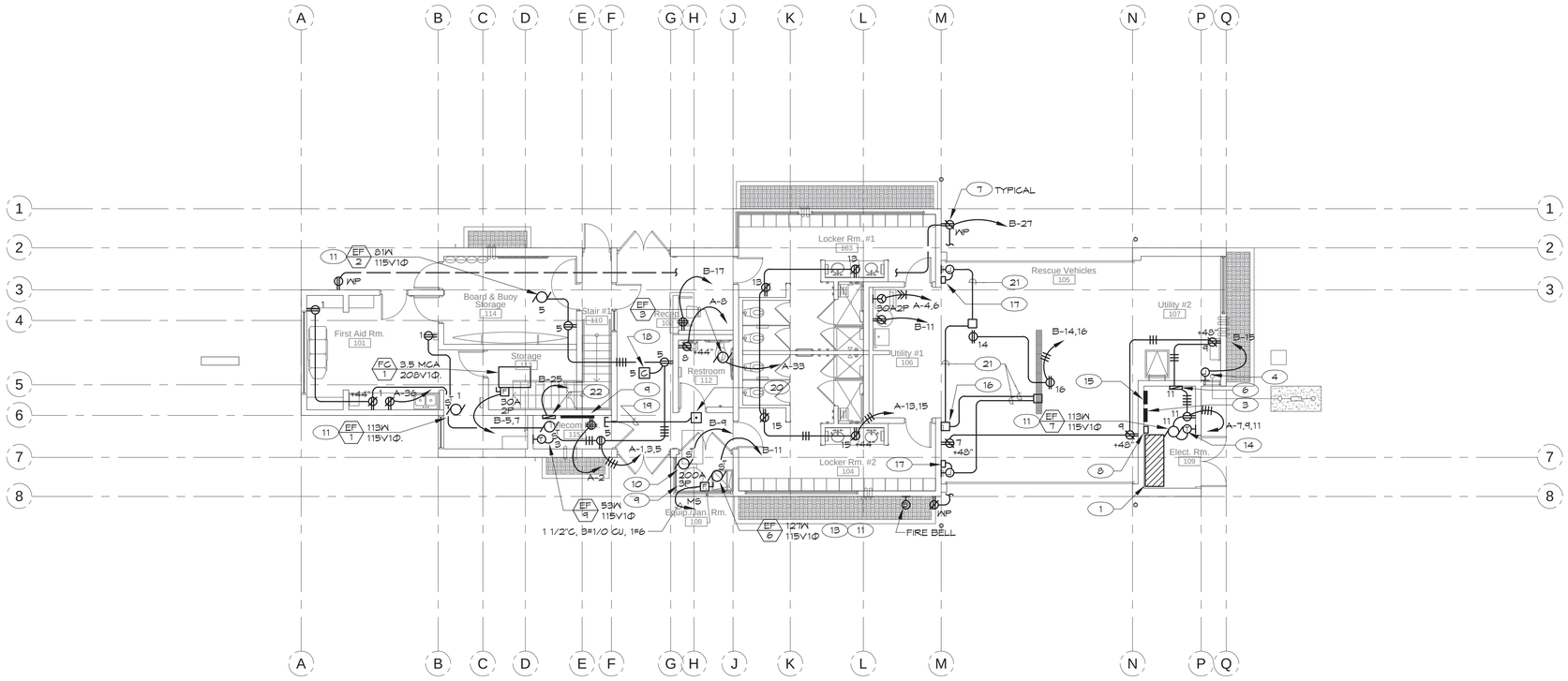

FIRST FLOOR POWER PLAN

1/8" = 1'-0"

NOTES:

1. MAIN SWITCHBOARD "MS"
2. THIS AREA IS CLASS 1, DIVISION 2 HAZARDOUS LOCATION. ALL ELECTRICAL DEVICES ARE TO BE SERVED FROM ABOVE.
3. PANEL "A"
4. FIRE SPRINKLER RISER, PROVIDE CONNECTION TO BELL
5. PLUGMOLD MOUNTED AT +44"
6. T-24 CONTROL PANEL.
7. ALL EXTERIOR BOXES SHALL BE COLE TL310
8. SURGE PROTECTION
9. WATER HEATER 45KW 208V3Φ.
10. CP-1 55W, 115V, 1Φ
11. INTERNAL DISCONNECT PROVIDED WITH UNIT
12. INTERLOCK WITH RTU-1
13. ROUTE THROUGH TITLE 24 CONTROL PANEL
14. LINE VOLTAGE T-STAT PROVIDED BY MECHANICAL CONTRACTOR INSTALLED BY ELECTRICAL CONTRACTOR
15. PANEL "B"
16. MASTER DOOR CONTROLLER PROVIDED BY DOOR SUPPLIERS
17. DOOR CONTROLLER PROVIDED BY DOOR SUPPLIERS
18. CARBON MONXOXIDE SENSOR, KIDDE KN-COB-IC OR EQUAL
19. 2"C.O. RUN ABOVE CEILING
20. 8"x8"x6" PULLBOX ABOVE CEILING WITH 2"C.O. TO LOW ROOF, PROVIDE WEATHERHEAD
21. CONTROLLER WIRING, 8-WIRE LOW VOLTAGE
22. FIRE ALARM CONTROL PANEL

GENERAL NOTES

1. FIXTURE MOUNTED IN CONCRETE CEILING SHALL BE BLOCKED OUT DURING CONSTRUCTION. CORING AFTER POUR IS UNACCEPTABLE
2. ALL CONDUITS SHALL BE CONCEALED

E-5

SPEC. NO. 8147

KRUSE & ASSOCIATES
LIGHTING AND ELECTRICAL DESIGN
10045 WORLD TRADE DRIVE, SUITE A SAN DIEGO, CA 92128
P. 858.676.9776 F. 858.676.9744 WWW.KRUSEASSOC.NET

REGISTERED PROFESSIONAL ENGINEER
GERALD L. KRUSE
No. E011569
Exp. 06-30-14
ELECTRICAL
STATE OF CALIFORNIA

PLANS FOR THE CONSTRUCTION OF

South Mission Beach Lifeguard Station

1st Floor Power Plan — E2.0

CITY OF SAN DIEGO, CALIFORNIA
ENGINEERING & CAPITAL PROJECTS
ARCHITECTURAL ENGINEERING & CONTRACTS DIVISION
SHEET 87 OF 94 SHEETS

WBS S-00791

APPROVED: FOR CITY ENGINEER — DATE 10/13/2014

SUBMITTED BY: JIHAD SLEIMAN, PROJECT MANAGER

DESCRIPTION	BY	APPROVED	DATE	FILMED
ORIGINAL	KNK			

YOUSIF BENYAMIN, PROJECT ENGINEER

218-1693 CCS27 COORDINATES

1858-6253 CCS83 COORDINATES

CONTRACTOR _____ DATE STARTED _____
INSPECTOR _____ DATE COMPLETED _____

32849-87-D

© COPYRIGHT October 14, 2014 at 3:29PM

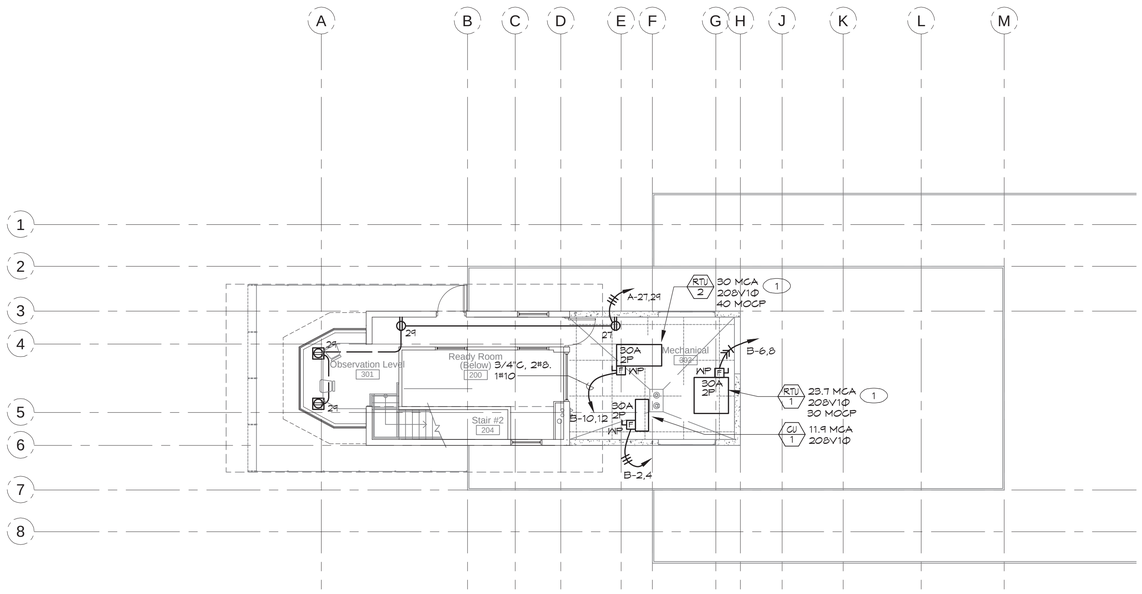

THIRD FLOOR POWER PLAN

1/8" = 1'-0"

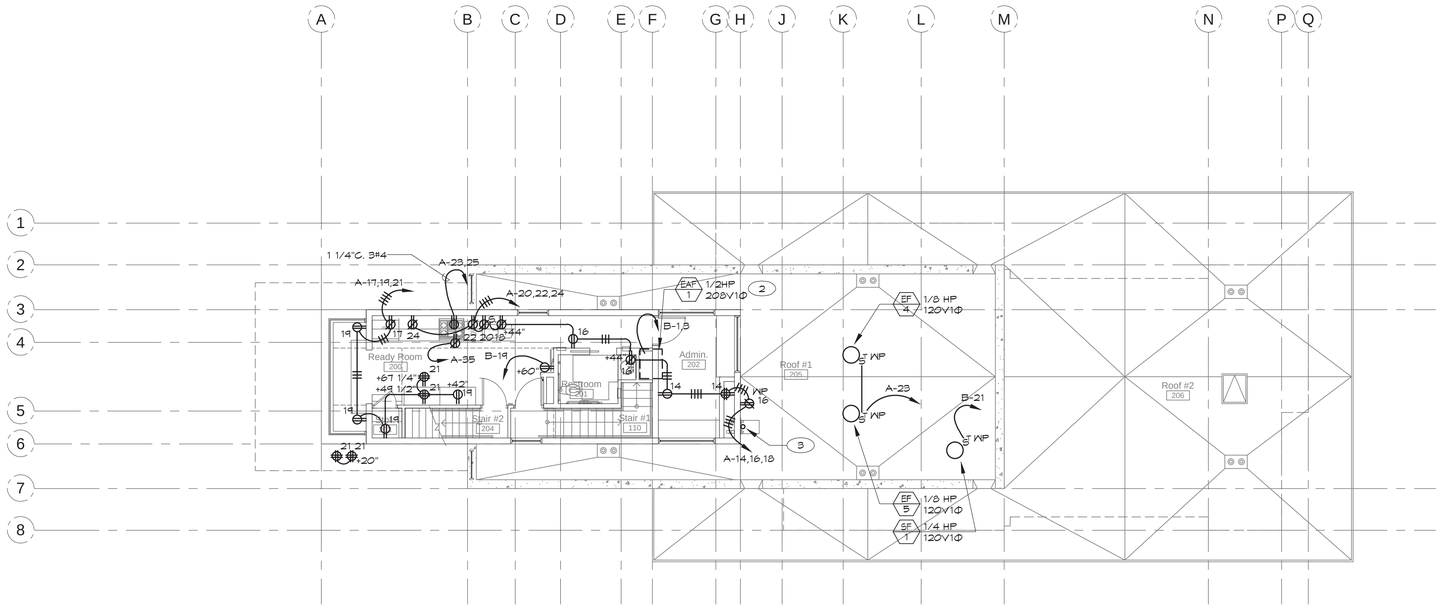

SECOND FLOOR POWER PLAN / ROOF PLAN

1/8" = 1'-0"

NOTES

1. INTERLOCK UNIT WITH EF-4 & EF-5
2. INTEGRAL DISCONNECT PROVIDED WITH UNIT
3. 2"C.O. WITH WEATHERHEAD

GENERAL NOTES

1. FIXTURE MOUNTED IN CONCRETE CEILING SHALL BE BLOCKED OUT DURING CONSTRUCTION. CORING AFTER POUR IS UNACCEPTABLE
2. ALL CONDUITS SHALL BE CONCEALED

E-6

KRUSE & ASSOCIATES
LIGHTING AND ELECTRICAL DESIGN
10245 WORLD TRADE DRIVE, SUITE A SAN DIEGO, CA 92128
P. 858.676.9776 F. 858.676.9744 WWW.KRUSEASSOC.NET

SPEC. NO. 8147

REGISTERED PROFESSIONAL ENGINEER
GERALD L. KRUSE
No. E011569
Exp. 06-30-14
ELECTRICAL
STATE OF CALIFORNIA

PLANS FOR THE CONSTRUCTION OF

South Mission Beach Lifeguard Station

2nd & 3rd Floor Power Plans — E2.1

CITY OF SAN DIEGO, CALIFORNIA
ENGINEERING & CAPITAL PROJECTS
ARCHITECTURAL ENGINEERING & CONTRACTS DIVISION
SHEET 88 OF 94 SHEETS

WBS S-00791

APPROVED: _____ 10/13/2014
FOR CITY ENGINEER — DATE

SUBMITTED BY:
JIHAD SLEIMAN
PROJECT MANAGER

DESCRIPTION	BY	APPROVED	DATE	FILMED
ORIGINAL	KNK			

YOUSIF BENYAMIN
PROJECT ENGINEER

218-1693
CCS27 COORDINATES

1858-6253
CCS83 COORDINATES

CONTRACTOR _____ DATE STARTED _____
INSPECTOR _____ DATE COMPLETED _____

32849-88-D

Proprietary design: These drawings and design are protected by common law copyright. All patentable material contained herein and originating with Dominy + Associates Architects @ domusstudio LLP shall be the property of Dominy + Associates Architects @ domusstudio LLP

© COPYRIGHT October 14, 2014 at 3:29PM

Proprietary design: These drawings and design are protected by common law copyright. All patentable material contained herein and originating with Dominy + Associates Architects @ domusstudio LLP shall be the property of Dominy + Associates Architects @ domusstudio LLP

© COPYRIGHT October 14, 2014 at 3:20PM

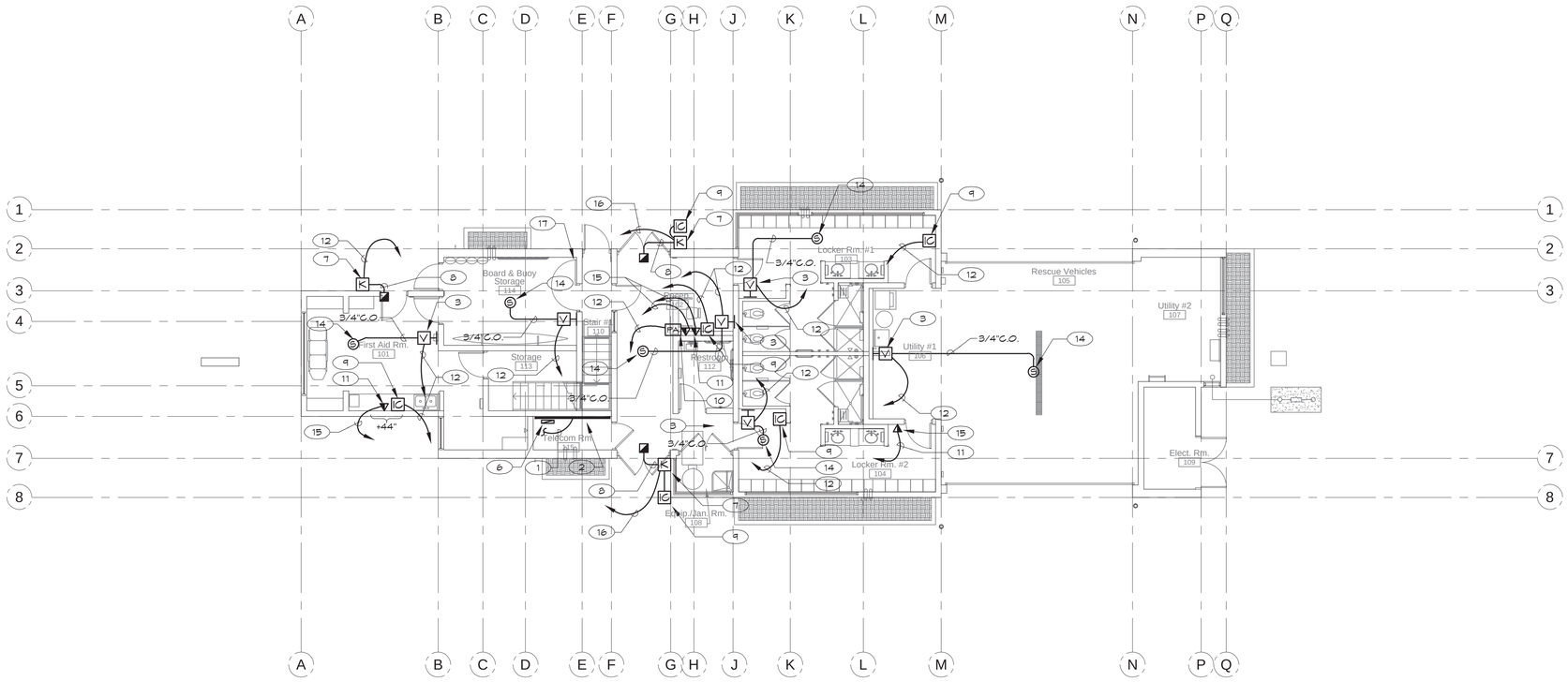

FIRST FLOOR TELEPHONE/DATA/INTERCOM

1/8" = 1'-0"

NOTES:

1. PROVIDE 1#6, CU. GND TO MAIN BUILDING GROUND PER TELEPHONE COMPANY REQUIREMENTS.
2. TELEPHONE TERMINAL BOARD "TTB" 4'x8'x3/4" PLYWOOD.
3. PROVIDE 4"x4" J-BOX WITH 2"x4" OPENING, FOR CITY PROVIDED AND INSTALLED VOLUME CONTROL
4. INSTALL OWNER FURNISHED BACKBOX FOR PA/INTERCOM. MOUNTED AT +48". PROVIDE
5. 3/4"C.O. TO PA/INTERCOM TERMINAL CABINET. SEE A/E0.2
6. PA/INTERCOM RACK PROVIDED AND INSTALLED BY CITY AT TOP OF BACKBOARD
7. PROVIDE 2"x4" J-BOX AT +48" FOR KEYLESS ENTRY. KEY-PAD PROVIDED AND INSTALLED BY CITY
8. PROVIDE 1/2" CONDUIT TO ELECTRIC DOOR STRIKE. COORDINATE WITH DOOR HARDWARE INSTALLER.
9. PROVIDE 2"x4" J-BOX AT +68" FOR CITY PROVIDED AND INSTALLED INTERCOM SUB-STATION
10. PROVIDE 4"x4" J-BOX FOR PUBLIC ADDRESS SYSTEM PROVIDED AND INSTALLED BY CITY
11. PROVIDE 4"x4" J-BOX FOR CITY FURNISHED AND INSTALLED TELEPHONE AND DATA DEVICES
12. 3/4" C.O. TO 6
13. INSTALL OWNERS BACKBOX FOR OWNERS FLUSH MOUNTED I.C. STATION. SEE A/E0.2
14. PROVIDE 4"x4" J-BOX FOR CITY FURNISHED AND INSTALLED 8" SPEAKER. SEE A/E0.2
15. 3/4" C.O TO 2
16. 1" C.O TO 6
17. THIS DOOR IS TO BE PROVIDED WITH A HOLD OPEN DEVICE. TIE TO F.A. SYSTEM

GENERAL NOTES

1. ALL BOXES TO BE 4"x4" WITH 2"x4" TRIM RING FOR BOXES IN MASONRY WALLS USE 2"x4" EXTRA DEEP
2. FIXTURE MOUNTED IN CONCRETE CEILING SHALL BE BLOCKED OUT DURING CONSTRUCTION. CORING AFTER POUR IS UNACCEPTABLE
3. ALL CONDUITS SHALL BE CONCEALED

E-7

SPEC. NO. 8147

KRUSE & ASSOCIATES
LIGHTING AND ELECTRICAL DESIGN
10045 WORLD TRADE DRIVE, SUITE A SAN DIEGO, CA 92128
P. 858.676.9776 F. 858.676.9744 WWW.KRUSEASSOC.NET

REGISTERED PROFESSIONAL ENGINEER
GERALD L. KRUSE
No. E011569
Exp. 06-30-14
ELECTRICAL
STATE OF CALIFORNIA

PLANS FOR THE CONSTRUCTION OF

South Mission Beach Lifeguard Station

1st Floor Data Plan — E2.2

CITY OF SAN DIEGO, CALIFORNIA
ENGINEERING & CAPITAL PROJECTS
ARCHITECTURAL ENGINEERING & CONTRACTS DIVISION
SHEET 89 OF 94 SHEETS

WBS S-00791

APPROVED: _____ FOR CITY ENGINEER
10/13/2014 DATE

SUBMITTED BY: JIHAD SLEIMAN, PROJECT MANAGER

DESCRIPTION	BY	APPROVED	DATE	FILMED
ORIGINAL	KNK			

YOUSIF BENYAMIN, PROJECT ENGINEER
218-1693
CCS27 COORDINATES
1858-6253
CCS83 COORDINATES

CONTRACTOR _____ DATE STARTED _____
INSPECTOR _____ DATE COMPLETED _____

32849-89-D

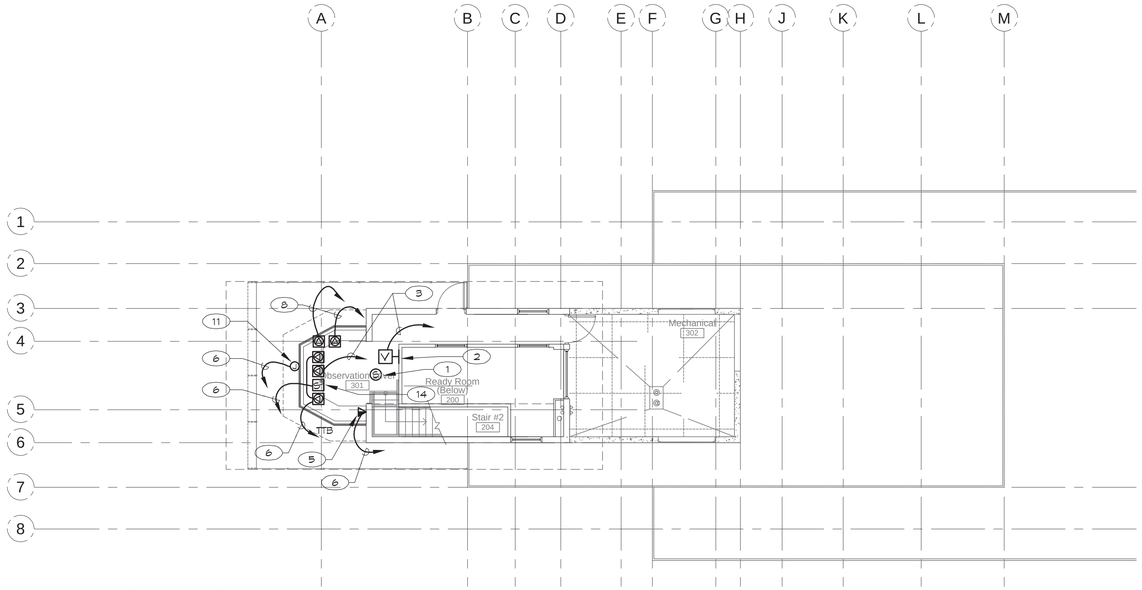

THIRD FLOOR DATA PLAN

1/8" = 1'-0"

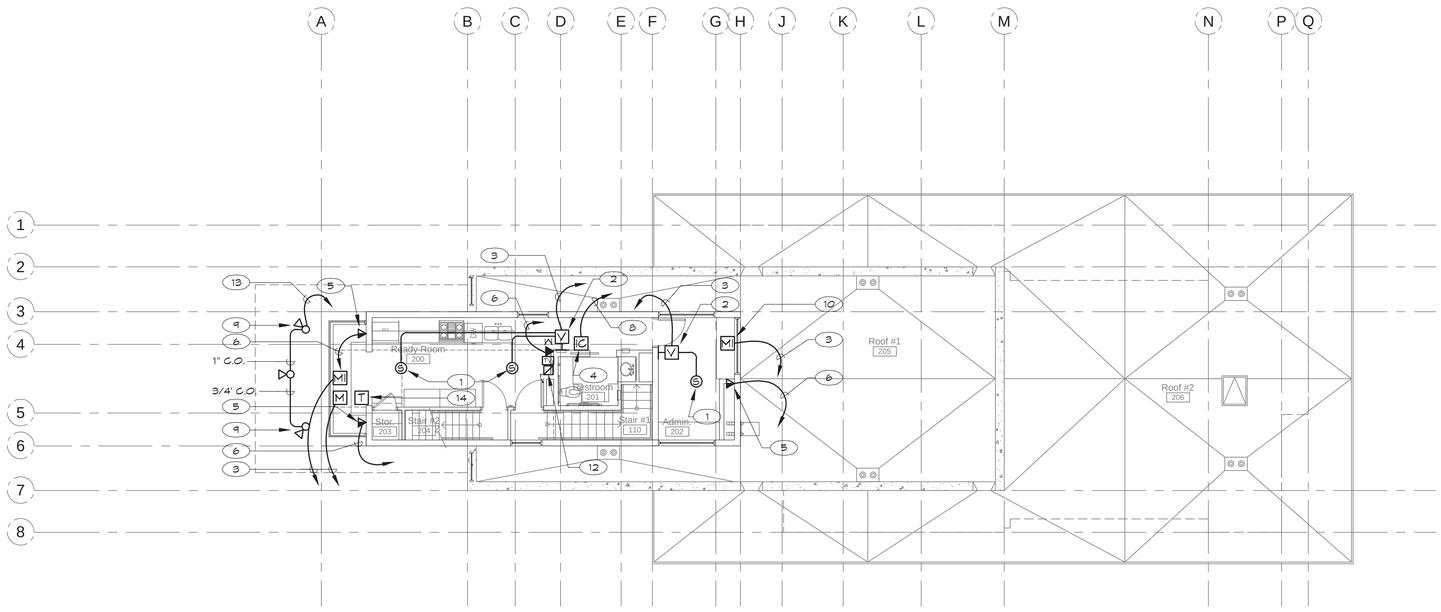

SECOND FLOOR DATA PLAN / ROOF PLAN

1/8" = 1'-0"

NOTES

1. PROVIDE SPECIALTY BACK BOX 4"x4" J-BOX FOR CITY FURNISHED AND INSTALLED 8" SPEAKER SEE 4/E2.2
2. PROVIDE 2"x4" J-BOX FOR CITY PROVIDED AND INSTALLED VOLUME CONTROL
3. 3/4" C.O. TO PA/INTERCOM TERMINAL CABINET
4. PROVIDE 2"x4" J-BOX AT +68" FOR CITY PROVIDED AND INSTALLED INTERCOM SUB-STATION
5. PROVIDE 4"x4" J-BOX FOR CITY FURNISHED AND INSTALLED TELEPHONE AND DATA DEVICES
6. 3/4" C.O. TO TTB
7. PROVIDE FLUSH FLOOR MOUNTED (2) COMPARTMENT J-BOX FOR CITY PROVIDED AND INSTALLED TELEPHONE AND DATA DEVICES. TYPICAL OF 4
8. 1" C.O. TO PA/INTERCOM TERMINAL CABINET
9. 4"x4" J-BOX FOR CITY PROVIDED AND INSTALLED LOUD SPEAKER
10. 4"x4" J-BOX FOR CITY PROVIDED AND INSTALLED MICROPHONE
11. 4"x4" J-BOX FOR CITY PROVIDED AND INSTALLED ANTENNA
12. THIS DOOR IS TO BE PROVIDED WITH A HOLD OPEN DEVICE, TIE TO F.A. SYSTEM
13. 1 1/2" C.O. TO PA/INTERIOR TERMINAL CABINET
14. TOGGLE SWITCH FOR SPEAKER ELECTRIC (PA)

GENERAL NOTES

1. FIXTURE MOUNTED IN CONCRETE CEILING SHALL BE BLOCKED OUT DURING CONSTRUCTION. CORING AFTER POUR IS UNACCEPTABLE
2. ALL CONDUITS SHALL BE CONCEALED

E-8

KRUSE & ASSOCIATES
LIGHTING AND ELECTRICAL DESIGN
10245 WORLD TRADE DRIVE, SUITE A SAN DIEGO, CA 92128
P. 858.676.9776 F. 858.676.9744 WWW.KRUSEASSOC.NET

SPEC. NO. 8147

REGISTERED PROFESSIONAL ENGINEER
GERALD L. KRUSE
No. E011569
Exp. 06-30-14
ELECTRICAL
STATE OF CALIFORNIA

PLANS FOR THE CONSTRUCTION OF

South Mission Beach Lifeguard Station

2nd & 3rd Floor Data Plans — E2.3

CITY OF SAN DIEGO, CALIFORNIA
ENGINEERING & CAPITAL PROJECTS
ARCHITECTURAL ENGINEERING & CONTRACTS DIVISION
SHEET 90 OF 94 SHEETS

WBS S-00791

APPROVED: FOR CITY ENGINEER — DATE 10/13/2014

SUBMITTED BY: JIHAD SLEIMAN, PROJECT MANAGER

DESCRIPTION	BY	APPROVED	DATE	FILMED
ORIGINAL	KNK			

YOUSIF BENYAMIN, PROJECT ENGINEER
218-1693
CCS27 COORDINATES
1858-6253
CCS83 COORDINATES

CONTRACTOR _____ DATE STARTED _____
INSPECTOR _____ DATE COMPLETED _____

32849-90-D

Proprietary design: These drawings and design are protected by common law copyright. All patentable material contained herein and originating with Dominy + Associates Architects @ domusstudio LLP shall be the property of Dominy + Associates Architects @ domusstudio LLP

© COPYRIGHT October 14, 2014 at 3:29PM

Proprietary design. These drawings and design are protected by common law copyright. All patentable material contained herein and originating with Dominy + Associates Architects @ domusstudio LLP shall be the property of Dominy + Associates Architects @ domusstudio LLP

© COPYRIGHT October 14, 2014 at 3:20PM

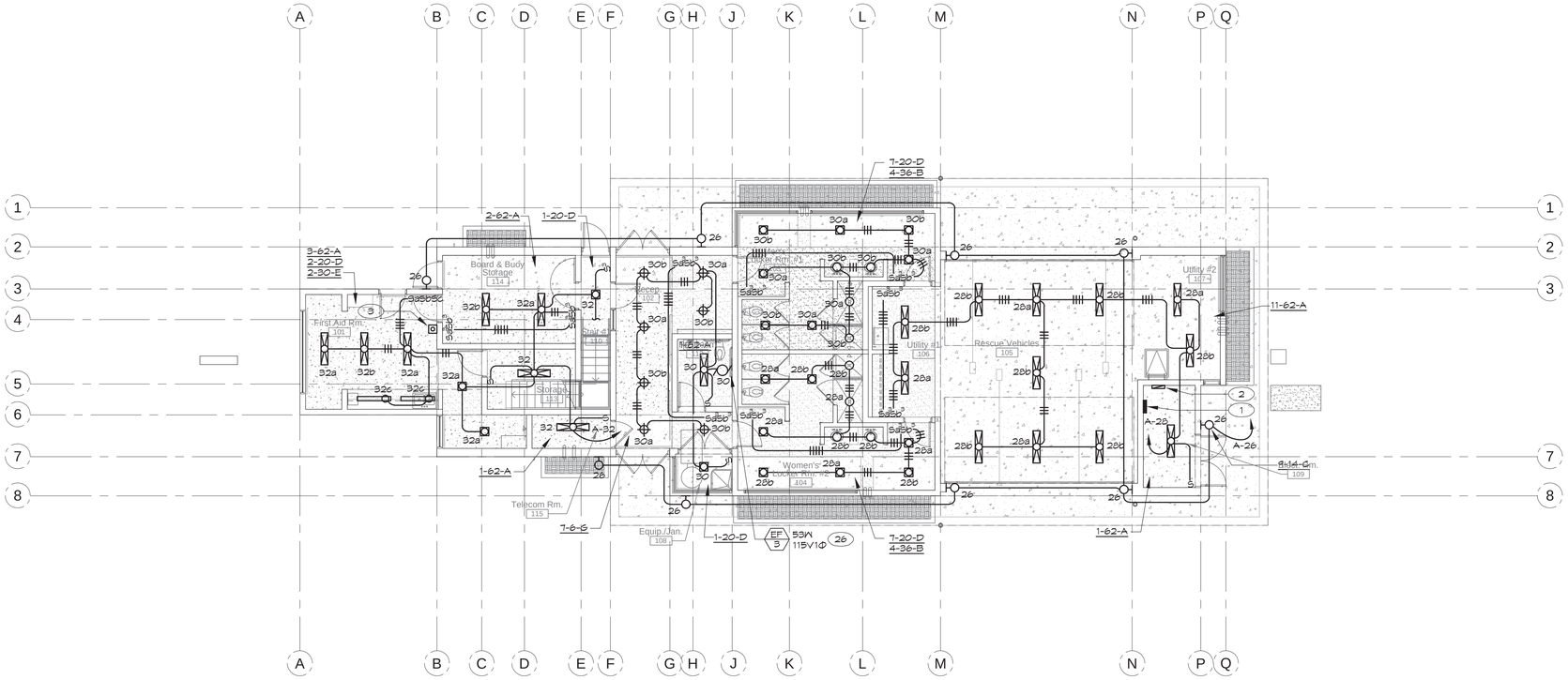

First Floor Lighting Plan

1/8" = 1'-0"

NOTES

1. PANEL "A"
2. T-24 CONTROL PANEL. COOPER LIGHT KEEPER LK8
3. T-24 OVERRIDE SWITCH.

GENERAL NOTES

1. FIXTURE MOUNTED IN CONCRETE CEILING SHALL BE BLOCKED OUT DURING CONSTRUCTION. CORING AFTER POUR IS UNACCEPTABLE
2. ALL CONDUITS SHALL BE CONCEALED

E-9

SPEC. NO. 8147

KRUSE & ASSOCIATES
LIGHTING AND ELECTRICAL DESIGN
10045 WORLD TRADE DRIVE, SUITE A SAN DIEGO, CA 92128
P. 858.676.9776 F. 858.676.9744 WWW.KRUSEASSOC.NET

REGISTERED PROFESSIONAL ENGINEER
GERALD L. KRUSE
No. E015691
Exp. 06-30-14
ELECTRICAL
STATE OF CALIFORNIA

PLANS FOR THE CONSTRUCTION OF

South Mission Beach Lifeguard Station

First Floor Lighting Plan — E3.0

CITY OF SAN DIEGO, CALIFORNIA
ENGINEERING & CAPITAL PROJECTS
ARCHITECTURAL ENGINEERING & CONTRACTS DIVISION
SHEET 91 OF 94 SHEETS

WBS S-00791

APPROVED: _____ FOR CITY ENGINEER
10/13/2014 DATE

SUBMITTED BY: JIHAD SLEIMAN, PROJECT MANAGER

DESCRIPTION	BY	APPROVED	DATE	FILMED
ORIGINAL	KNK			

YOUSIF BENYAMIN, PROJECT ENGINEER
218-1693
CCS27 COORDINATES
1858-6253
CCS83 COORDINATES

CONTRACTOR _____ DATE STARTED _____
INSPECTOR _____ DATE COMPLETED _____

32849-91-D

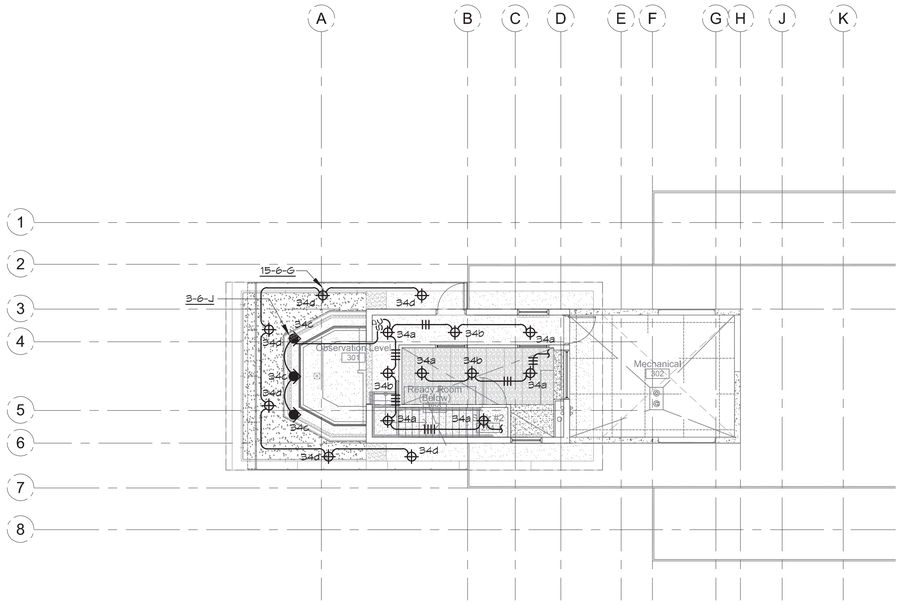

OBSERVATION LEVEL LIGHTING PLAN

1/8" = 1'-0"

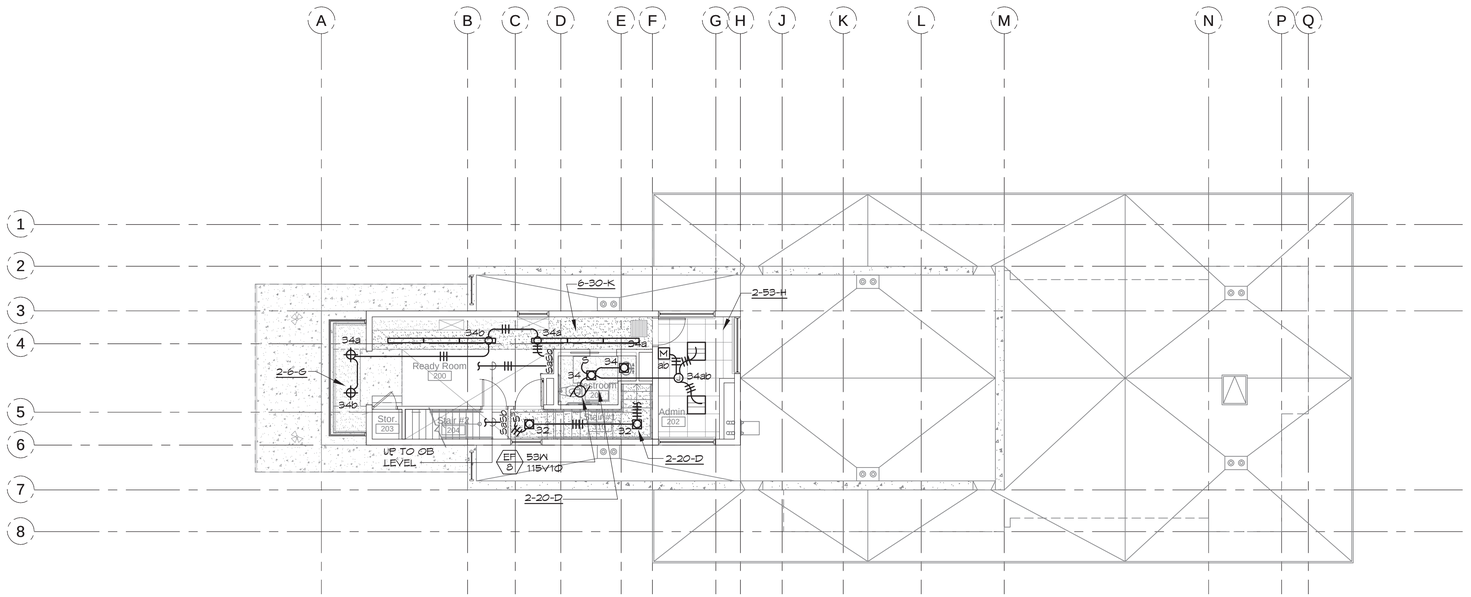

SECOND FLOOR LIGHTING PLAN

1/8" = 1'-0"

GENERAL NOTES

1. FIXTURE MOUNTED IN CONCRETE CEILING SHALL BE BLOCKED OUT DURING CONSTRUCTION. CORING AFTER POUR IS UNACCEPTABLE
2. ALL CONDUITS SHALL BE CONCEALED

E-10

SPEC. NO. 8147

KRUSE & ASSOCIATES
LIGHTING AND ELECTRICAL DESIGN
10245 WORLD TRADE DRIVE, SUITE A SAN DIEGO, CA 92128
P. 858.676.9776 F. 858.676.9744 WWW.KRUSEASSOC.NET

REGISTERED PROFESSIONAL ENGINEER
GERALD L. KRUSE
No. E011569
Exp. 06-30-14
ELECTRICAL
STATE OF CALIFORNIA

PLANS FOR THE CONSTRUCTION OF

South Mission Beach Lifeguard Station

2nd & Obs. Floor Lighting Plans

E3.1

CITY OF SAN DIEGO, CALIFORNIA
ENGINEERING & CAPITAL PROJECTS
ARCHITECTURAL ENGINEERING & CONTRACTS DIVISION
SHEET 92 OF 94 SHEETS

WBS S-00791

APPROVED: _____ FOR CITY ENGINEER
10/13/2014 DATE

SUBMITTED BY:
JIHAD SLEIMAN
PROJECT MANAGER

DESCRIPTION	BY	APPROVED	DATE	FILMED
ORIGINAL	KNK			

YOUSIF BENYAMIN
PROJECT ENGINEER

218-1693
CCS27 COORDINATES

1858-6253
CCS83 COORDINATES

CONTRACTOR _____ DATE STARTED _____
INSPECTOR _____ DATE COMPLETED _____

32849-92-D

Proprietary design: These drawings and design are protected by common law copyright. All patentable material contained herein and originating with Dominy + Associates Architects @ domusstudio LLP shall be the property of Dominy + Associates Architects @ domusstudio LLP
© COPYRIGHT October 14, 2014 at 3:29PM

Proprietary design: These drawings and design are protected by common law copyright. All patentable material contained herein and originating with Dominy + Associates Architects @ domusstudio LLP shall be the property of Dominy + Associates Architects @ domusstudio LLP

CERTIFICATE OF COMPLIANCE (Part 1 of 4) LTG-1C

Project Name			Date
South Mission Beach Lifeguard Station			10/8/2014
Project Address: San Diego	Climate Zone: 7	Total Cond. Floor Area: 2,846	Unconditioned Floor Area: 1,096

GENERAL INFORMATION

Building Type:	☑ Nonresidential	☐ High-Rise Residential	☐ Hotel/Motel Guest Room
☐ School	☐ Relocatable Public School	☑ Conditioned Spaces	☑ Unconditioned Spaces
Phase of Construction:	☑ New Construction	☐ Addition	☐ Alteration
Method of Compliance:	☐ Complete Building	☑ Area Category	☐ Tailored

Documentation Author's Declaration Statement

I certify that this Certificate of Compliance documentation is accurate and complete.

Name: Keith Kruse	Signature: Keith N Kruse
Company: Kruse & Associates	Date: 10/8/2014
Address: 12245 World Trade Dr., Suite A	CEA # CEPE #
City/State/Zip: San Diego, California 92128	Phone: 858.676.9776

The Principal Lighting Designer's Declaration Statement

- I am eligible under Division 3 of the California Business and Professional Code to accept responsibility for the lighting design.
- This Certificate of Compliance identifies the lighting features and performance specifications required for compliance with Title 24, Pages 1 and 6 of the California Code of Regulations.
- The design features represented on this Certificate of Compliance are consistent with the information provided to document this design on the other applicable compliance forms, worksheets, calculations, plans and specifications submitted to the enforcement agency for approval with this building permit application.

Name: Gerry Green	Signature
Company: Kruse & Assocciates	Phone: (858) 676-9776
Address: 12245 World Trade Dr.	License #: 15691
City/State/Zip: San Diego, CA 92128	Date: 10/08/14

Lighting Mandatory Measures
Indicate location on building plans of Mandatory Measures Note Block: SHEET E4.1

LIGHTING COMPLIANCE FORMS & WORKSHEETS (check box if worksheets is included)

For detailed instructions on the use of this and all Energy Efficiency Standards compliance forms; please refer to the Nonresidential Manual published by the California Energy Commission.

☑	LTG-1C Pages 1 through 4	Certificate of Compliance. All Pages required on plans for all submittals.
☑	LTG-2C	Lighting Controls Credit Worksheet
☑	LTG-3C	Indoor Lighting Power Allowance
☐	LTG-4C Pages 1 through 4	Tailored Method Worksheet
☐	LTG-5C Pages 1 and 2	Line Voltage Track Lighting Worksheet

CERTIFICATE OF COMPLIANCE (Part 2 of 4) LTG-1C

Project Name: South Mission Beach Lifeguard Station — Date: 10/8/2014

INDOOR LIGHTING SCHEDULE and FIELD INSPECTION ENERGY CHECKLIST

Installation Certificate, LTG-1- INST (Retain a copy and verify form is completed and signed.) **Field Inspector** ☐

Certificate of Acceptance, LTG-2A and LTG-3A (Retain a copy and verify form is completed and signed.) **Field Inspector** ☐

A separate Lighting Schedule Must Be Filled Out for Conditioned and Unconditioned Spaces Installed Lighting Power listed on this Lighting Schedule is only for:

☑ **CONDITIONED SPACE** ☐ **UNCONDITIONED SPACE**

☑ The actual indoor lighting power listed below includes all installed permanent and portable lighting systems in accordance with §146(a).

☑ Only for offices: Up to the first 0.2 watts per square foot of portable lighting shall not be required to be included in the calculation of actual indoor lighting power density in accordance with the Exception to §146(a). All portable lighting in excess of 0.2 watts per square foot is totaled below.

A	B	C	D	E	E	F	G	H	H
None or Item Tag	Complete Luminaire Description[1] (i.e, 3 lamp fluorescent troffer, F32T8, one dimmable electronic ballasts)		Watts per Luminaire[1]	How wattage Was determined: CEC Default From NA8	According To §130 (d or e)	Number of Luminaires	Installed Watts (D X F)	Field Inspector[2]: Pass	Fail
A	(2) 4 ft Fluorescent T8 Rapid Start Elec		62.0	☑	☐	8	496	☐	☐
B	(2) 18w Compact Fluorescent Triple 4 Pin Elec		36.0	☑	☐	8	288	☐	☐
D	20w LED		20.0	☑	☐	20	400	☐	☐
E	(1) 28w Linear Fluorescent T5 Elec		30.0	☑	☐	2	60	☐	☐
G	6w LED		6.0	☑	☐	21	126	☐	☐
H	(3) 4 ft Fluorescent T8 Rapid Start Elec		93.0	☑	☐	2	186	☐	☐
J	30w LED		30.0	☑	☐	3	90	☐	☐
				☐	☐			☐	☐
				☐	☐			☐	☐
				☐	☐			☐	☐
				☐	☐			☐	☐
				☐	☐			☐	☐
				☐	☐			☐	☐
				☐	☐			☐	☐
				☐	☐			☐	☐
				☐	☐			☐	☐
				☐	☐			☐	☐
				☐	☐			☐	☐
				☐	☐			☐	☐
				☐	☐			☐	☐
					Installed Watts Page Total:		1,646		
Building total number of pages:					Installed Watts Building Total (Sum of all pages) Enter into LTG-1C Page 4 of 4		1,646		

1. Wattage shall be determined according to Section 130 (d and e). Wattage shall be rating of light fixture, not rating of bulb.
2. If Fail then describe on Page 2 of the Inspection Checklist Form and take appropriate action to correct. Verify building plans if necessary.

CERTIFICATE OF COMPLIANCE (Part 2 of 4) LTG-1C

Project Name: South Mission Beach Lifeguard Station — Date: 10/8/2014

INDOOR LIGHTING SCHEDULE and FIELD INSPECTION ENERGY CHECKLIST

Installation Certificate, LTG-1- INST (Retain a copy and verify form is completed and signed.) **Field Inspector** ☐

Certificate of Acceptance, LTG-2A and LTG-3A (Retain a copy and verify form is completed and signed.) **Field Inspector** ☐

A separate Lighting Schedule Must Be Filled Out for Conditioned and Unconditioned Spaces Installed Lighting Power listed on this Lighting Schedule is only for:

☐ **CONDITIONED SPACE** ☑ **UNCONDITIONED SPACE**

☑ The actual indoor lighting power listed below includes all installed permanent and portable lighting systems in accordance with §146(a).

☑ Only for offices: Up to the first 0.2 watts per square foot of portable lighting shall not be required to be included in the calculation of actual indoor lighting power density in accordance with the Exception to §146(a). All portable lighting in excess of 0.2 watts per square foot is totaled below.

A	B	C	D	E	E	F	G	H	H
None or Item Tag	Complete Luminaire Description[1] (i.e, 3 lamp fluorescent troffer, F32T8, one dimmable electronic ballasts)		Watts per Luminaire[1]	How wattage Was determined: CEC Default From NA8	According To §130 (d or e)	Number of Luminaires	Installed Watts (D X F)	Field Inspector[2]: Pass	Fail
A	(2) 4 ft Fluorescent T8 Rapid Start Elec		62.0	☑	☐	12	744	☐	☐
				☐	☐			☐	☐
				☐	☐			☐	☐
				☐	☐			☐	☐
				☐	☐			☐	☐
				☐	☐			☐	☐
				☐	☐			☐	☐
				☐	☐			☐	☐
				☐	☐			☐	☐
				☐	☐			☐	☐
				☐	☐			☐	☐
				☐	☐			☐	☐
				☐	☐			☐	☐
				☐	☐			☐	☐
				☐	☐			☐	☐
				☐	☐			☐	☐
				☐	☐			☐	☐
				☐	☐			☐	☐
				☐	☐			☐	☐
				☐	☐			☐	☐
					Installed Watts Page Total:		744		
Building total number of pages:					Installed Watts Building Total (Sum of all pages) Enter into LTG-1C Page 4 of 4		744		

1. Wattage shall be determined according to Section 130 (d and e). Wattage shall be rating of light fixture, not rating of bulb.
2. If Fail then describe on Page 2 of the Inspection Checklist Form and take appropriate action to correct. Verify building plans if necessary.

CERTIFICATE OF COMPLIANCE (Part 3 of 4) LTG-1C

Project Name: South Mission Beach Lifeguard Station — Date: 10/8/2014

INDOOR LIGHTING SCHEDULE and FIELD INSPECTION ENERGY CHECKLIST

Fill in controls for all spaces: a) area controls, b) multi-level controls, c) manual daylighting controls for daylit areas > 250 ft², automatic daylighting controls for daylit areas > 2,500 ft², d) shut-off controls, e) display lighting controls, f) tailored lighting controls – general lighting controlled separately from display, ornamental and display case lighting and g) demand responsive automatic controls for retail stores > 50,000 ft², in accordance with Section 131.

MANDATORY LIGHTING CONTROLS – FIELD INSPECTION ENERGY CHECKLIST

Type/ Description	Number of Units	Location in Building	Special Features	Field Inspector: Pass	Fail
SaSb		Entire Space	☐	☐	☐
Title 24 Control Panel		Entire Space	☐	☐	☐
Motion Sensor		Admin 202	☐	☐	☐
			☐	☐	☐
			☐	☐	☐
			☐	☐	☐
			☐	☐	☐
			☐	☐	☐
			☐	☐	☐
			☐	☐	☐
			☐	☐	☐
			☐	☐	☐
			☐	☐	☐
			☐	☐	☐
			☐	☐	☐
			☐	☐	☐
			☐	☐	☐
			☐	☐	☐
			☐	☐	☐
			☐	☐	☐
			☐	☐	☐
			☐	☐	☐
			☐	☐	☐
			☐	☐	☐

SPECIAL FEATURES INSPECTION CHECKLIST (See Page 2 of 4 of LTG-1C)

The local enforcement agency should pay special attention to the items specified in this checklist. These items require special written justification and documentation, and special verification. The local enforcement agency determines the adequacy of the justification, and may reject a building or design that otherwise complies based on the adequacy of the special justification and documentation submitted.

Field Inspector's Notes or Discrepancies:

CERTIFICATE OF COMPLIANCE (Part 4 of 4) LTG-1C

Project Name: South Mission Beach Lifeguard Station — Date: 10/8/2014

CONDITIONED AND UNCONDITIONED SPACE LIGHTING MUST NOT BE COMBINED FOR COMPLIANCE

Indoor Lighting Power for Conditioned Spaces		Watts	Indoor Lighting Power for Unconditioned Spaces		Watts
Installed Lighting (from Conditioned LTG-1C, Page 2)		1,646	**Installed** Lighting (from Unconditioned LTG-1C, Page 2)		744
Lighting Control Credit Conditioned Spaces (from LTG-2C)	-	37	Lighting Control Credit Unconditioned Spaces (from LTG-2C)	-	0
Adjusted **Installed** Lighting Power	=	1,609	Adjusted **Installed** Lighting Power	=	744
Complies if **Installed ≤ Allowed**		↕	Complies if **Installed ≤ Allowed**		↕
Allowed Lighting Power Conditioned Spaces (from LTG-3C or PERF-1)		2,734	**Allowed** Lighting Power Unconditioned Spaces (from LTG-3C)		968

Required Acceptance Tests

Designer:

This form is to be used by the designer and attached to the plans. Listed below is the acceptance test for the Lighting system, **LTG-2A and LTG-3A**. The designer is required to check the acceptance tests and list all control devices serving the building or space shall be certified as meeting the Acceptance Requirements for Code Compliance. If all the lighting system or control of a certain type requires a test, list the different lighting and the number of systems. The NA7 Section in the Appendix of the Nonresidential Reference Appendices Manual describes the test. Since this form will be part of the plans, completion of this section will allow the responsible party to budget for the scope of work appropriately. **Forms can be grouped by type of Luminaire controlled.**

Enforcement Agency:

Systems Acceptance. Before Occupancy Permit is granted for a newly constructed building or space or when ever new lighting system with controls is installed in the building or space shall be certified as meeting the Acceptance Requirements.
The **LTG-2A and LTG-3A** forms are not considered complete forms and are not to be accepted by the enforcement agency unless the boxes are checked and/or filled and signed. In addition, a Certificate of Acceptance forms shall be submitted to the enforcement agency that certifies plans, specifications, installation certificates, and operating and maintenance information meet the requirements of §10-103(b) of Title 24 Part 6. The field inspector must receive the properly filled out and signed forms before the building can receive final occupancy. A copy of the **LTG-2A and LTG-3A** for each different lighting luminaire control(s) must be provided to the owner of the building for their records.

Luminaires Controlled: Equipment Requiring Testing	Description	Number of Luminaires controlled	Location	LTG-2A and LTG-3A Controls and Sensors and Automatic Daylighting Controls Acceptance
Occ Sensor - Multi-Level	(3) 4 ft Fluorescent T8 Rapid Start Elec	2	Elect	☑
				☐
				☐
				☐
				☐
				☐
				☐
				☐
				☐
				☐
				☐
				☐
				☐
				☐
				☐
				☐

LIGHTING CONTROLS CREDIT WORKSHEET (Part 1 of 2) LTG-2C

Project Name: South Mission Beach Lifeguard Station — Date: 10/8/2014

POWER ADJUSTMENT FACTORS (PAF) FOR NON-DAYLIGHT CONTROLS

A Separate PAF Worksheet Must Be Filled Out for Conditioned and Unconditioned Spaces. Control Credits listed on this schedule are only for:

☑ **CONDITIONED SPACES** ☐ **UNCONDITIONED SPACES**

A	B	C	D	E	F	G
Room # Zone ID Areas	Lighting Control Description[1]	Plan Reference	Room Area (ft²)	Watts of Control Lighting	Power Adjustments Factor[2]	Control Credit Watts (E x F)
Elect	Occ Sensor - Multi-Level	H	102	186	0.20	37
					PAGE TOTAL	37

Note:		
Conditioned and Unconditioned Space shall be separately totaled	Building total of non-daylight control credit watts for all pages of LTG-2C Page 1 of 2	
	Enter building total of all daylight controls credit watts from LTG-2C Page 2 of 2	0
	BUILDING TOTAL OF ALL CONTROL CREDIT WATTS (FOR BOTH NON-DAYLIGHT AND DAYLIGHT CONTROL CREDITS) Enter in LTG-1C; Page 4: Lighting Control Credit as appropriate for CONDITIONED or UNCONDITIONED Spaces	37

1. Description shall be consistent with Type of Control defined in Table 146-C
2. Power Adjustment Factor taken from Table 146-C

INDOOR LIGHTING POWER ALLOWANCE LTG-3C

Project Name: South Mission Beach Lifeguard Station — Date: 10/8/2014

ALLOWED LIGHTING POWER (Chose One Method)

A Separate LTG-3C must be filled out for Conditioned and Unconditioned Spaces. Indoor Lighting Power Allowances listed on this page are only for:

☑ CONDITIONED SPACES ☐ UNCONDITIONED SPACES

COMPLETE BUILDING METHOD

BUILDING CATEGORY (From §146 Table 146-E)	WATTS PER (ft²)	X	COMPLETE BLDG. AREA	=	ALLOWED WATTS
	TOTALS		AREA		WATTS

AREA CATEGORY METHOD

BUILDING CATEGORY (From §146 Table 146-F)	WATTS PER (ft²)	X	Area ft²	=	ALLOWED WATTS
Electrical, Mechanical Room	0.70		102		71
Locker/Dressing Room	0.80		722		578
Lobby, Main Entry	1.50		160		240
Medical and Clinical Care	1.20		361		433
Convention/Conference/Meeting	1.40		546		764
Office <= 250 sqft	1.10		148		163
Corridor/Restroom/Support	0.60		807		484
	TOTALS		2,846		2,734
			AREA		WATTS

TAILORED METHOD

Total Allowed Watts using the Tailored Method taken from LTG-4C (Page 1 of 4) Row 3: 0

The indoor lighting power allowance using the Tailored Method of compliance shall be determined using the LTG-4C set of forms. A separate set of LTG-4C forms shall be filled out for CONDITIONED and UNCONDITIONED spaces

E-11

KRUSE & ASSOCIATES
LIGHTING AND ELECTRICAL DESIGN
12245 WORLD TRADE DRIVE, SUITE A SAN DIEGO, CA 92128
P. 858.676.9776 F. 858.676.9744 WWW.KRUSEASSOC.NET

SPEC. NO. 8147

REGISTERED PROFESSIONAL ENGINEER — GERALD L. GREEN — No. E015691 — Exp. 06-30-14 — ELECTRICAL — STATE OF CALIFORNIA

PLANS FOR THE CONSTRUCTION OF
South Mission Beach Lifeguard Station

Title-24 Calculations — E4.0

CITY OF SAN DIEGO, CALIFORNIA
ENGINEERING & CAPITAL PROJECTS
ARCHITECTURAL ENGINEERING & CONTRACTS DIVISION
SHEET 93 OF 94 SHEETS

WBS S-00791

APPROVED: [signature] FOR CITY ENGINEER — DATE 10/13/2014

SUBMITTED BY: JIHAD SLEIMAN, PROJECT MANAGER

DESCRIPTION	BY	APPROVED	DATE	FILMED
ORIGINAL	KNK			

YOUSIF BENYAMIN, PROJECT ENGINEER
218-1693 CCS27 COORDINATES
1858-6253 CCS83 COORDINATES

CONTRACTOR ______ DATE STARTED ______
INSPECTOR ______ DATE COMPLETED ______

32849-93-D

© COPYRIGHT October 14, 2014 at 3:21PM

Proprietary design. These drawings and design are protected by common law copyright. All patentable material contained herein and originating with Dominy + Associates Architects @ domusstudio LLP shall be the property of Dominy + Associates Architects @ domusstudio LLP

INDOOR LIGHTING POWER ALLOWANCE — LTG-3C

Project Name: *South Mission Beach Lifeguard Station* | Date: *10/8/2014*

ALLOWED LIGHTING POWER (Chose One Method)

A Separate LTG-3C must be filled out for Conditioned and Unconditioned Spaces. Indoor Lighting Power Allowances listed on this page are only for:

☐ CONDITIONED SPACES ☑ UNCONDITIONED SPACES

COMPLETE BUILDING METHOD

BUILDING CATEGORY (From §146 Table 146-E)	WATTS PER (ft²)	X	COMPLETE BLDG. AREA	=	ALLOWED WATTS
TOTALS					
			AREA		WATTS

AREA CATEGORY METHOD

BUILDING CATEGORY (From §146 Table 146-F)	WATTS PER (ft²)	X	Area ft²	=	ALLOWED WATTS
Auto Repair	*0.90*		*1,006*		*905*
Electrical, Mechanical Room	*0.70*		*90*		*63*
TOTALS			*1,096*		*968*
			AREA		WATTS

TAILORED METHOD

Total Allowed Watts using the Tailored Method taken from LTG-4C (Page 1 of 4) Row 3	*0*

The indoor lighting power allowance using the Tailored Method of compliance shall be determined using the LTG-4C set of forms. A separate set of LTG-4C forms shall be filled out for CONDITIONED and UNCONDITIONED spaces

LIGHTING MANDATORY MEASURES: NONRESIDENTIAL — LTG-MM

Project Name: *South Mission Beach Lifeguard Station* | Date: *10/8/2014*

Indoor Lighting Measures:

§131(d): **Shut-off Controls**

1. For every floor, all interior lighting systems shall be equipped with a separate automatic control to shut off the lighting. This automatic control shall meet the requirements of Section 119 and may be an occupancy sensor, automatic time switch, or other device capable of automatically shutting off the lighting.
2. Override for Building Lighting Shut-off: The automatic building shut-off system is provided with a manual, accessible override switch in sight of the lights. The area of override is not to exceed 5,000 square feet.

§119(h): Automatic Control Devices Certified: All automatic control devices specified are certified, all alternate equipment shall be certified and installed as directed by the manufacturer.

§111: Fluorescent Ballast and Luminaires Certified: All fluorescent fixtures specified for the project are certified and listed in the Directory. All installed fixtures shall be certified.

§131(a): Individual Room/Area Controls: Each room and area in this building is equipped with a separate switch or occupancy sensor device for each area with floor-to-ceiling walls.

§131(b): Uniform Reduction for Individual Rooms: All rooms and areas greater than 100 square feet and more than 0.8 watts per square foot of lighting load shall be controlled with bi-level switching for uniform reduction of lighting within the room.

§131(c): Daylight Area Control: All rooms with windows and skylights that are greater than 250 square feet and that allow for the effective use of daylight in the area shall have 50% of the lamps in each daylit area controlled by a separate switch; or the effective use of daylight cannot be accomplished because the windows are continuously shaded by a building on the adjacent lot. Diagram of shading during different times of the year is included on plans.

§131(c): Display Lighting. Display lighting shall be separately switched on circuits that are 20 amps or less.6.

Outdoor Lighting Measures:

§130(c)1: Mandatory lighting power determination for medium base sockets without permanently installed ballasts

§132(a): All permanently installed luminaires with lamps rated over 100 Watts either have a lamp efficacy of at least 60 lumens per Watt or are controlled by a motion sensor.

§132(b): All Luminaires with lamps rated greater than 175 Watts in hardscape area, including parking lots, building entrances, canopies, and all outdoor sales areas meet the Cutoff Requirements.

§132(c)1: All permanently installed outdoor lighting meets the control requirements listed.

§132(c): Building facades, parking lots, garages, canopies, and outdoor sales areas meet the Multi-Level Lighting Requirements listed.

CERTIFICATE OF COMPLIANCE (Part 1 of 4) — OLTG-1C

Project Name: *South Mission Beach Lifeguard Station* | Date: *10/8/2014*

Project Address: *San Diego, CA* | Total Illuminated Area: *0*

GENERAL INFORMATION

Phase of Construction: ☑ New Construction ☐ Addition ☐ Alteration

Documentation Author's Declaration Statement

I certify that this Certificate of Compliance documentation is accurate and complete.

Name: *Keith Kruse*	Signature: Keith W Kruse
Company: *Kruse & Associates*	Date: *10/8/2014*
Address: *12245 World Trade Dr., Suite A*	CEA # / CEPE #:
City/State/Zip: *San Diego, California 92128*	Phone: *858.676.9776*

Principal Lighting Designer's Declaration Statement

- I am eligible under Division 3 of the California Business and Professional Code to accept responsibility for the lighting design.
- This Certificate of Compliance identifies the lighting features and performance specifications required for compliance with Title 24, Pages 1 and 6 of the California Code of Regulations.
- The design features represented on this Certificate of Compliance are consistent with the information provided to document this design on the other applicable compliance forms, worksheets, calculations, plans and specifications submitted to the enforcement agency for approval with this building permit application.

Name: *Gerry Green*	Signature:
Company: *Kruse & Associates*	Phone: *(858) 676-9776*
Address: *12245 World Trade Dr.*	License #: 15691
City/State/Zip: *San Diego, CA 92128*	Date: 10/08/14

Principal Lighting Designer's Declaration

☑ I certify that this Certificate of Compliance documentation is accurate and complete, and accounts for all outdoor lighting power, including building mounted, pole mounted, as well as all other lighting designed for the site, and that Additional Lighting Power Allowances for Specific Applications or Additional Lighting Power Allowances for Ordinance Requirements have not been counted more than one time for the same area, in accordance with Section 147 of the Standards.

Outdoor Lighting Mandatory Measures
Indicate location on building plans of Mandatory Measures Note Block: SHEET E4.2

LIGHTING COMPLIANCE FORMS & WORKSHEETS (check box if worksheets is included)

For detailed instructions on the use of this and all Energy Efficiency Standards compliance forms; please refer to the Nonresidential Manual published by the California Energy Commission.

☑	OLTG-1C	Certificate of Compliance. All 4 pages required or plans for all submittals.
☑	OLTG-2C	(Pages 1 of 3) Lighting Wattage Allowances for General Hardscape, Sales Frontage, or Ornamental Lighting. Optional on plans.
☐	OLTG-2C	(Pages 2 of 3) Lighting Wattage Allowance for Per Application or Per Area. Optional on plans.
☐	OLTG-2C	(Pages 3 of 3) Additional Lighting Power Allowance for Ordinance Requirements. Optional on plans.

CERTIFICATE OF COMPLIANCE (Part 2 of 4) — OLTG-1C

Project Name: *South Mission Beach Lifeguard Station* | Date: *10/8/2014*

COMPLIANCE FIXTURE / LIGHTING CONTROL SCHEDULE and FIELD INSPECTION CHECKLIST

INSTALLATION CERTIFICATE, OLTG-1INST (Retain a copy and verify form is completed and signed.) — **Field Inspection** ☐

CERTIFICATE OF ACCEPTANCE, OLTG-2A (Retain a copy and verify form is completed and signed.) — **Field Inspection** ☐

Luminaire Schedule — **Installed Watts**

A	B	C	D	E	F	G	H	I
Name or Item Tag	Luminaire Description[1] See footnote below (i.e.: 1 lamp pole-top shoe-box 400 watt metal halide)	Cutoff Designation	Watts per Luminaire	Special Features	How wattage was determined: Default from NA 8	How wattage was determined: According to §130 (D or E)	Number of Luminaires	Installed Watts (D X G)	Field Inspector[2]: Pass
C	*14w LED*		*14.0*	☐	☑	☐	*9*	*126*	☐
				☐	☐	☐			☐
				☐	☐	☐			☐
				☐	☐	☐			☐
				☐	☐	☐			☐
				☐	☐	☐			☐
				☐	☐	☐			☐
				☐	☐	☐			☐
				☐	☐	☐			☐
				☐	☐	☐			☐

Enter total into OLTG-1C; Page 4 of 4: Row H; Total Installed Watts: *126*

1. Type of luminaire (i.e.: post top, wall pack, surface, shoe box); for non-incandescent luminaires, indicate nominal lamp wattage and lamp type (i.e.: fluorescent, incandescent, HID); ballast type (i.e.: electronic or magnetic); number of lamps and number of ballasts per luminaire. For incandescent luminaires, the luminaire wattage listed in column D shall be the maximum relamping rated wattage on a permanent factory-installed label on the luminaire, NOT the wattage of the lamp (bulb) used, in accordance with Section 130(d or e).
2. If Fail then describe on Page 2 of the Inspection Checklist Form and take appropriate action to correct. Verify building plans if necessary.

EXEMPT LUMINAIRES — **Field Inspection** ☐

Name or Symbol	Description of exempt luminaires in accordance with §147

MANDATORY CONTROLS — **Field Inspection** ☐

#	Description	Location	#	Description	Location

SPECIAL FEATURES INSPECTION CHECKLIST (See Page 2 of 4 of OLTG-1C)

The local enforcement agency should pay special attention to the items specified in this checklist. These items require special written justification and documentation, and special verification. The local enforcement agency determines the adequacy of the justification, and may reject a building or design that otherwise complies based on the adequacy of the special justification and documentation submitted.

Filed Inspector Notes or Discrepancies:

CERTIFICATE OF COMPLIANCE (Part 3 of 4) — OLTG-1C

Project Name: *South Mission Beach Lifeguard Station* | Date: *10/8/2014*

A. OUTDOOR LIGHTING ZONE

OUTDOOR LIGHTING ZONE: ☐ OLZ 1 ☐ OLZ 2 ☑ OLZ 3 ☐ OLZ 4

Is the Outdoor Lighting Zone: ☑ Default in accordance with §10-114, or ☐ Amended by JHA

Complete the information below if the default Outdoor Lighting Zone has been amended by the local jurisdiction having authority (JHA):

☐ The site is a government designated park, recreational area, wildlife preserve, or portion thereof, and has been designated as LZ2 or LZ3, in accordance with Table 10-114-A, because the site is contained within such a zone.

☐ The local jurisdiction having authority has officially adopted a change to the State Default Lighting Zone and has notified the Energy Commission by providing the materials required in §10-114(d) to the Executive Director.

☐ The adopted change is posted on the Energy Commission website.

B. ADDITIONAL LIGHTING POWER ALLOWANCE FOR ORDINANCE REQUIREMENTS

Are additional lighting power allowances for ordinance in Table 147-C used? ☐ Yes ☑ No

Complete the information below if additional lighting powar allowances for ordinance requirements are used:

☐ The local jurisdiction having authority has officially adopted specific outdoor light levels, which are expressed as average or minimum footcandle levels, by following a public process that allowed for formal public notification, review, and comment about the proposed change.

☐ The local jurisdiction having authority which adopted specific outdoor light levels and has notified the Commission by providing the following materials required §10-114(f) to the Executive Director.

C. ACCEPTANCE FORMS

Required Acceptance Tests

Designer:

This form is to be used by the designer and attached to the plans. Listed below is the acceptance test for the Lighting system, **OLTG-2A**. The designer is required to check the acceptance tests and list all control devices serving the building or space shall be certified as meeting the Acceptance Requirements for Code Compliance. If all the lighting system or control of a certain type requires a test, list the different lighting and the number of systems. The NA7 Section in the Appendix of the Nonresidential Reference Appendices Manual describes the test. Since this form will be part of the plans, completion of this section will allow the responsible party to budget for the scope of work appropriately. **Forms can be grouped by type of Luminaire controlled.**

Enforcement Agency:

Systems Acceptance. Before Occupancy Permit is granted for a newly constructed building or space or when ever new lighting system with controls is installed in the building or space shall be certified as meeting the Acceptance Requirements.
The **OLTG-2A** form is not considered a complete form and is not to be accepted by the enforcement agency unless the boxes are checked and/or filled and signed. In addition, a Certificate of Acceptance forms shall be submitted to the enforcement agency that certifies plans, specifications, installation certificates, and operating and maintenance information meet the requirements of §10-103(b) of Title 24 Part 6. The field inspector must receive the properly filled out and signed forms before the building can receive final occupancy. A copy of the **OLTG-2A** for each different lighting luminaire control(s) must be provided to the owner of the building for their records.

Certificate of Acceptance

Luminaires Controlled				OLTG-2A[1]
Equipment Requiring Testing	Description	Qty. of Like Controls	Location	Outdoor Lighting Acceptance Tests

1. Insert: **OMS** for Outdoor Motion Sensor; **OLSC** for Outdoor Lighting Shutoff Controls; **OP** for Outdoor Photocontrol; **ATS** for Astronomical Time Switch; and, **STS** for Standard (non-astronomical) Time Switch acceptance.

CERTIFICATE OF COMPLIANCE (Part 4 of 4) — OLTG-1C

Project Name: *South Mission Beach Lifeguard Station* | Date: *10/8/2014*

ALLOWED AND INSTALLED OUTDOOR LIGHTING POWER

		Lighting Wattage Power Allowance
A	Lighting power allowance for general hardscape (from OLTG-2C Page 1 of 3)	*1,034*
B	Specific application lighting wattage allowance per unit length (from OLTG-2C Page 1 of 3)	*0*
C	Specific application lighting wattage allowance for ornamental lighting (from OLTG-2C Page 1 of 3)	*0*
D	Specific application lighting wattage allowance per application (from OLTG-2C Page 2 of 3)	*0*
E	Specific application lighting wattage allowance per area (from OLTG-2C Page 2 of 3)	*0*
F	Specific application lighting wattage allowance for ordinance requirements (from OLTG-2C Page 3 of 3)	*0*
G	Total Allowed Wattage = Sum of rows A through F:	*1,034*
H	Total installed watts (from Compliance Fixture Schedule, (from OLTG-2C Page 1 of 3)	*126*

Complies if wattage in row H is less than or equal to the wattages in row G — ☑ Yes ☐ No

OUTDOOR LIGHTING WORKSHEET — (Part 1 of 3) — OLTG-2C

Project Name: *South Mission Beach Lifeguard Station* | Date: *10/8/2014*

A. LIGHTING POWER ALLOWANCE FOR GENERAL HARDSCAPE

AREA WATTAGE ALLOWANCE (AWA)

A	B	C
Illuminated Hardscape Area	AWA Per Square Foot	AWA (A X B)
0	*0.092*	*0*

LINEAR WATTAGE ALLOWANCE (LWA)

D	E	F
Perimeter Length of General Hardscape	LWA Per Lineal Foot	LWA (D X E)
287	*0.920*	*264*

INITIAL WATTAGE ALLOWANCE

G
IWA (Watts)
770

TOTAL GENERAL HARDSCAPE LIGHTING ALLOWANCE

H
C + F + G
1,034

Enter total into OLTG-1C; Page 4 of 4, Row A; Lighting Power Allowance for General Hardscape *1,034*

B. SPECIFIC APPLICATION LIGHTING WATTAGE ALLOWANCE PER UNIT LENGTH (Available only for cities frontage)

DETERMINE WATTAGE ALLOWANCE

A	B	C	D
Specific Lighting Application	Linear Feet of Frontage	Sales Frontage Allowance for OLZ (Watts per LF)	Wattage Allowance (B X C)

LUMINAIRE TYPE

E	F
Name or Symbol	Luminaire Type

DESIGN WATTS

G	H	I
Lumin QTY	Watts Per Luminaire	Design Watts (G X H)

J

J
Allowed Watts Minimum of D or I

Enter total into OLTG-1C; Page 4 of 4, Row B; Specific Application Lighting Wattage Allowance Per Unit Length *0*

C. SPECIFIC APPLICATION WATTAGE ALLOWANCE FOR ORNAMENTAL LIGHTING

DETERMINE WATTAGE ALLOWANCE

A	B	C	D
Specific Lighting Application	Square feet of Hardscape	Ornamental Lighting Wattage Allowance (Watts per ft²)	Wattage Allowance (B X C)

LUMINAIRE TYPE

E	F
Name or Symbol	Luminaire Type

DESIGN WATTS

G	H	I
Lumin QTY	Watts Per Luminaire	Design Watts (G X H)

J

J
Allowed Watts Minimum of D or I

Enter total into OLTG-1C; Page 4 of 4, Row C; Specific Application Wattage for Ornamental Lighting *0*

NOTES

CERTIFICATE OF ACCEPTANCE (LTG-2A) AND ALL RELATED ACCEPTANCE DOCUMENTS SHALL BE SUBMITTED TO THE FILED INSPECTOR DURING CONSTRUCTION. CERTIFICATE OF OCCUPANCY WILL NOT BE ISSUED UNTIL THESE FORMS ARE REVIEWED AND APPROVED.

E-12

SPEC. NO. 8147

KRUSE & ASSOCIATES
LIGHTING AND ELECTRICAL DESIGN
10045 WORLD TRADE DRIVE, SUITE A SAN DIEGO, CA 92126
P. 858.676.9776 F. 858.676.9744 WWW.KRUSEASSOCIATES.NET

REGISTERED PROFESSIONAL ENGINEER — GERALD L. KREIGER — No. E015691 — Exp. 06-30-14 — ELECTRICAL — STATE OF CALIFORNIA

PLANS FOR THE CONSTRUCTION OF

South Mission Beach Lifeguard Station

Title-24 Calculations — E4.1

CITY OF SAN DIEGO, CALIFORNIA
ENGINEERING & CAPITAL PROJECTS
ARCHITECTURAL ENGINEERING & CONTRACTS DIVISION
SHEET 94 OF 94 SHEETS

WBS S-00791

APPROVED: _____ FOR CITY ENGINEER — 10/13/2014 DATE

SUBMITTED BY: JIHAD SLEIMAN, PROJECT MANAGER

DESCRIPTION	BY	APPROVED	DATE	FILMED
ORIGINAL	KNK			

YOUSIF BENYAMIN, PROJECT ENGINEER

218-1693

CCS27 COORDINATES

1858-6253

CCS83 COORDINATES

CONTRACTOR _____ DATE STARTED _____
INSPECTOR _____ DATE COMPLETED _____

32849-94-D

© COPYRIGHT October 14, 2014 at 3:21PM