City of San Diego
Metropolitan Wastewater Department

BIOLOGICAL AERATED FILTER FOR THE POINT LOMA WASTEWATER TREATMENT PLANT

PROTOCOL FOR PILOT TESTING

PHASE II

(Serves as an Addendum to the Phase I Protocol – refer to Phase I protocol for the Exhibits)

July 2004

Prepared for

Engineering and Program Management &
Operation and Maintenance Divisions

by

BROWN AND CALDWELL

PHASE II PILOT TEST PROTOCOL
TABLE OF CONTENTS

I. BACKGROUND 2
II. TEST OBJECTIVES 4
III. SCHEDULE 5
A. Overall Pilot Test Schedule 5
B. Phase II –Schedule 5
IV. PILOT TEST UNIT DESCRIPTION 6
V. SAMPLING PROTOCOL 6
A. DAILY SAMPLING AND MONITORING 7
1. Composite Sampling 7
2. Meter Readings 7
3. Pilot Test Unit Instrument Readings 10
4. Headloss Measurements 10
B. EVERY OTHER DAY SAMPLING AND MONITORING 10
1. Backwash Sampling and Monitoring 10
2. Evaluation of Co-settling of Raw and BAF Solids 11
C. OCCASIONAL SAMPLING AND MONITORING 11
1. Settleability Test 11
2. Measurement of Biomass 12
3. Hourly Discrete Densadeg Effluent Sample Collection 12
4. Collimated Beam Testing 12
5. MS2 Bacteriophage Testing 12
6. Bioassay 13
7. Continuous Turbidity Reading During Stress Testing 13
8. DAFT for Backwash Water Thickening 13
9. Filter Flocculated BOD Analysis 14
10. Assessment of Oxygen Transfer Efficiency 14
D. ADDITIONAL DATA (Normal PLWTP Monitoring Program for NPDES Permit) 15
VI. OPERATION AND MAINTENANCE 15
VII. HEALTH AND SAFETY 17
VIII. EMERGENCY 17
IX. MONTHLY REPORTS 18
X. ROLES AND RESPONSIBILITIES 18

PILOT TEST PROTOCOL

City of San Diego MWWD
Biological Aerated Filter Pilot Test at PLWTP – Phase II

I. BACKGROUND

A technical memorandum (TM) was prepared that evaluated the technical and economic feasibility of utilizing the biological aerated filter (BAF) technology to provide secondary treatment technology at the Point Loma Wastewater Treatment Plant (PLWTP). Information from US BAF facilities visited by Brown and Caldwell (BC) and the City of San Diego (City), data received from the two BAF vendors and from the literature was used to develop the preliminary costs reported in this TM. However, the PLWTP facility has some unique characteristics that differ from facilities where data were collected. The temperature and strength of the PLWTP wastewater as well as other wastewater characteristics differ enough to possibly impact performance of the BAF system. In addition, many reports on the performance of BAFs are related to operations employing multistage BAF that provide carbonaceous BOD removal, nitrification, and/or denitrification; it is difficult to differentiate the performance of these systems on the removal of carbonaceous BOD, which is the primary design goal of the BAF technology that is being considered for the PLWTP facility. Evaluation of key design parameters through pilot testing of candidate BAF systems and a candidate clarifier/thickener system when operating under San Diego conditions will provide crucial information that will allow the City to evaluate the technical and economic feasibility of the BAF technology in more detail than has been possible to date.

Three implementation options (shown in the Figure 1) form the basis of the pilot test. These options are as follows:

> Option 1 – Use BAF to treat advance primary effluent to secondary level. Recycle backwash to the primary sedimentation basin (PSB) influent channel to co-settle with primary sludge.
>
> Option 2 – Use BAF to treat advance primary effluent to secondary level. Thicken backwash in a ballasted clarifier/thickener (BC/T). Recycle BC/T effluent to the PSB influent channel. Pump thickened solids to the sludge holding tank for subsequent digestion.
>
> Option 3 – Replace existing PSBs with BC/Ts. Use BAF to treat primary effluent from the BC/T. Recycle backwash to the BC/T influent and co-settle BAF waste sludge with primary sludge. Pump thickened solids to the sludge holding tank for subsequent digestion.

A process flow diagram representing a scheme to evaluate Option 3, i.e. Phase II of the Study, is shown in Figure 2. A site plan showing the location of the pilot test facility relative to the existing PLWTP and the arrangement of the pilot units are shown on Figures 3 and 4, respectively. Complete design drawings are provided in Exhibit A.

City and BC representatives visited European facilities with full-scale BIOSTYR, BIOFOR and/or Densadeg in operation. The group found Densadeg to be very effective in thickening

backwash waste from the BIOFOR and was equally effective as a high rate primary clarifier. Because of the observed performance, the City subsequently directed BC to increase the

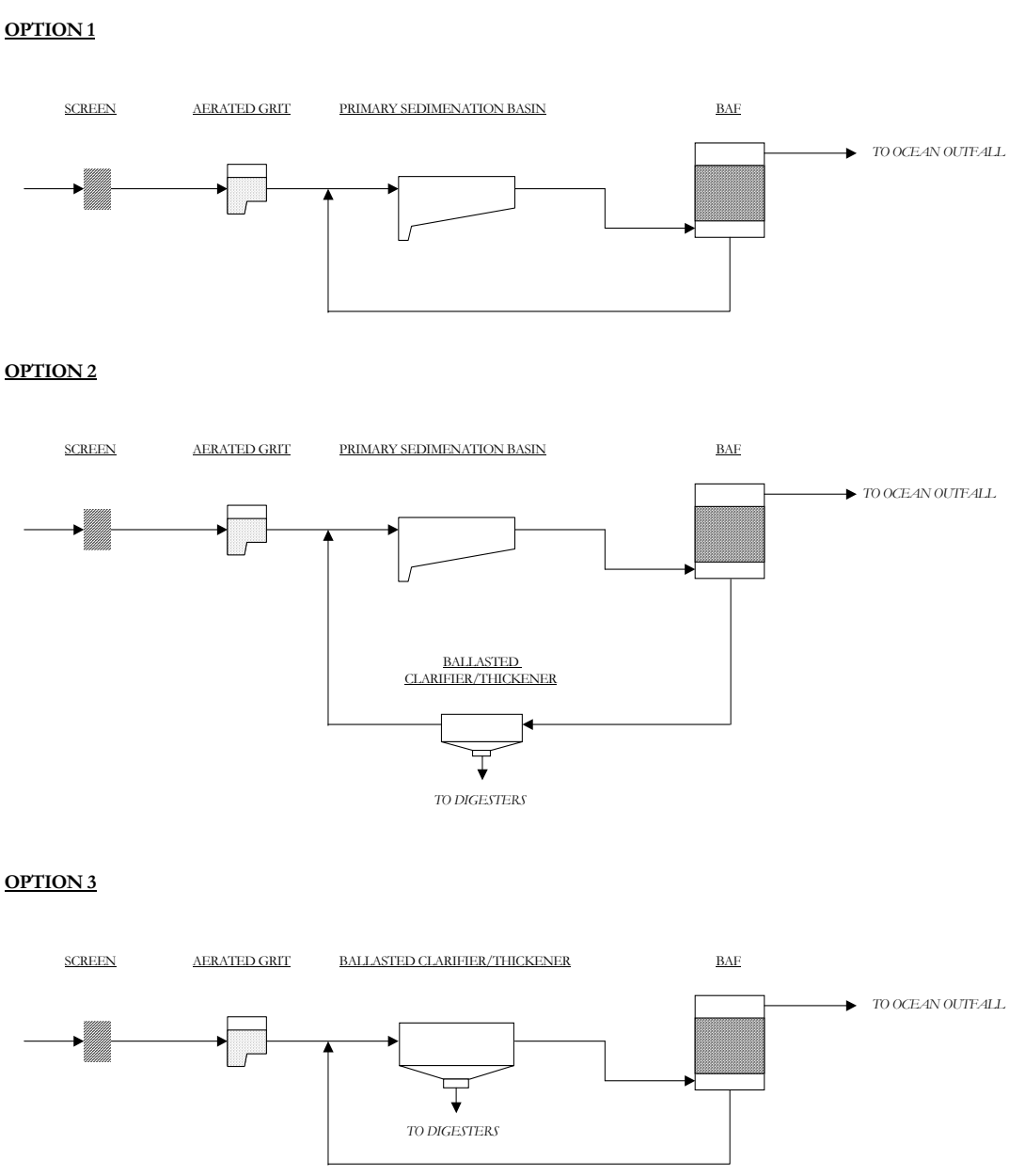

FIGURE 1 - OPTIONS FOR INCORPORATING BAF AT THE PLWTP

testing period for Densadeg. It was also concluded, after extensive discussions with the manufacturer of Densadeg, Ondeo-Degremont, Inc. (ODI), that Option 2 could not be evaluated because of the low volumes of backwash generated relative to the capacity of the Densadeg. The Densadeg pilot unit has a minimum capacity of 100 gpm. By comparison, only about 60 gpm of backwash is generated with both the BIOFOR and BIOSTYR pilot units backwashing. In addition the backwash process only lasts for 60 minutes. Under this condition, the Densadeg unit will not be able to develop a sufficient sludge blanket to reflect

normal operations. Therefore, the pilot test will be developed to simulate Options 1 and 3 only. This protocol is for Phase II, simulation of Option 3.

In addition to Option 3, performance of a bench scale Dissolve Air Floatation Thickening (DAFT) unit will be tested for thickening of backwash water in Phase II. DAFT unit is an alternative to Densadeg unit considered in Option 2 for thickening.

II. TEST OBJECTIVES

The main objectives for the pilot test are as follows:

To validate the following design parameters proposed by each BAF vendor:

Parameter	BIOFOR C	BIOFOR N	BIOSTYR	DENSADEG
BOD loading rate (30-d running average) lb/1000 cf-d	224	90	218	
TSS loading rate (30-d running average) lb/1000 cf-d	100	45	99.7	
Hydraulic loading rate (MMF) (gpm/sf)	1.9	3.9	2.0	10.25 (over settling tubes)
Hydraulic loading rate (PWWF) (gpm/sf)	3.0	6	2.9	12.40 (over settling tubes)
Process air supply (MMF) (scfm/sf)	0.52	0.52	0.85	
Backwash air (scfm/sf)	5.35	5.35	0.85	

To determine the performance of the two BAF systems under consideration when operated over a range of anticipated seasonal hydraulic, organic and solids loadings
To develop solids generation factors required to support the selection of the appropriate solids thickening scheme that would obviate the need for construction of additional anaerobic digestion at the PLWTP
To determine power requirements for each BAF system
To determine the headloss development over the operational period
To determine aeration requirements for each BAF system
To determine backwash conditions (frequency, volume, air and water rates) associated with each BAF system
To ascertain the potential for media loss and plugging potential
To determine the settleability of the backwash solids, particularly focusing on their ability to co-settle and co-thicken with primary sludge
To determine if Densadeg can achieve the same performance as existing PSBs.
To determine the impact of using Densadeg on performance of the BAF units.
To determine the impact of reducing the coagulant dose on Densadeg and BAF units performance.
To determine the performance of Densadeg without coagulant, and the impact on performance of the BAF units.
To determine the optimum coagulant/polymer feed with different sludge recycle rates.

III. SCHEDULE

A. Overall Pilot Test Schedule

The pilot test is scheduled to commence February 2004 and continue until August 2004. The pilot test is expected to proceed as follows:

Date	Event
January – February, 2004	Project Startup
February –May, 2004 PHASE I	Testing of BIOSTYR and BIOFOR using primary effluent pumped from the primary effluent channel. No processing of backwash solids will occur. Occasional evaluation of solids settleability performed.
June-September 2004 PHASE II	Pre-screened wastewater pumped from the screening channels (at the headworks) to the Densadeg. Testing of BIOSTYR and BIOFOR using Densadeg effluent. Backwash from BAF will be co-settled/co-thickened with the pre-screened wastewater in the Densadeg.

At the conclusion of the pilot test, a report will be prepared summarizing the pilot test findings and providing recommended design criteria for the full-scale design for each unit tested. A revised cost estimate will also be prepared, in light of the pilot test findings.

B. Phase II –Schedule

Date	Run No	Event
May 26		Delivery of Densadeg pilot test units at PLWTP
May 27		Installation of pilot units, including anchoring and leveling of unit. Start of piping and electrical connections Sampling program for Phase I to end
May 28		Delivery of final Phase I samples to the lab Columns to remain in service No liquid samples taken Meter data collection
May 29-31		Weekend/Holiday. No liquid samples taken Meter data collection only
June 1		Finish plumbing and electrical Relocate Influent Pump to Headworks BAF columns placed in idle mode
June 4		Hydraulic Testing of Densadeg
June 8-15		Optimization of Densadeg BAF to operate using Densadeg Effluent Hourly grab samples of the BAF effluent will be tested to determine how quickly the BAF units can return to stable operation
June 16-17		Training performed by ODI on the proper operation of the Densadeg pilot test unit BAF acclimation and BAF effluent grab sampling and turbidity analysis will continue

Date	Run No	Event
July 26-August 1	1	Begin sampling and monitoring program for Densadeg Determine if Densadeg can achieve the same performance as PSBs at 10.25 gpm/sf rise rate (simulating maximum 30-day average conditions)
August 2-8	2	Determine impact of reducing coagulant feed on Densadeg effluent and on BAF performance Rise rate at 10.25 gpm/sf
August 9-15	3	Determine performance of Densadeg without coagulant and no sludge recycle and its consequent impact on BAF performance Rise rate at 10.25 gpm/sf
August 16-22	4	Increase Densadeg rise rate to 12.4 gpm/sf (simulating PWWF conditions) and determine impact on Densadeg and BAF performance
August 23-29	5	Lower rise rate to 5.0 gpm/sf to determine if lower velocities and increased sludge blanket results in thicker sludges Add BW at 10% of inlet flow to determine if Densadeg and BAF performance are impacted DAFT testing.
August 30-September 5	6	Operate Densadeg at 10.25 gpm/sf (simulating a max 30-day average) Add BW at 5% of inlet flow to determine if Densadeg and BAF performance are impacted DAFT testing.
September 6-19	7	Operate Densadeg at 10.25 gpm/sf (simulating a max 30-day average) Add BW at 10% of inlet flow to determine if Densadeg and BAF performance are impacted
September 20-24	8	Add BW at 15% of inlet flow to determine if Densadeg and BAF performance are impacted Operate Densadeg at rise rate that provides good effluent quality and high solids content in sludge
September 25-27		Pilot Unit Cleanup

IV. PILOT TEST UNIT DESCRIPTION

Specifications for the Biostyr, Biofor-C, Biofor-N, and Densadeg pilot test units are provided in Exhibit B.

V. SAMPLING PROTOCOL

The Phase II sampling program is presented in Table 1. Sampling locations noted in Table 1 can be cross-referenced using Figure 2.

The sampling crew (consisting of O&M, EPMD and BC personnel) will be responsible for retrieving the composite bottles from the autosamplers and delivering them to the PLWTP Lab. The sampling crew will also fill out Chain-of-Custody forms (sample given in Exhibit C) required by the PLWTP Lab to accompany the sample bottles. The PLWTP Lab staff will label the bottles, complete the manifests, and analyze the samples for the parameters indicated on the manifests.

A. DAILY SAMPLING AND MONITORING

The following activities will be performed daily.

1. Composite Sampling

Daily time-based composite samples are to be collected of the influent and effluent streams of the Biostyr, Biofor-C, and Densadeg pilot units. It might be necessary to sample Biofor-N effluent based on the Biofor-C performance in Run 4. Refrigerated autosamplers set at 4 degrees C are to be used. The autosampler will be programmed such that a 75-mL sample will be collected every 15 minutes. This will produce about a 7.2-L composite sample which will be divided into various sample bottles, some of which contain preservatives as noted in Table 1.

During weekdays, the PLWTP Operations and Process Control Staff will remove the composite sample bottle from the autosampler; replace it with an empty and labeled bottle (note that the autosampler will not be reprogrammed); fill out manifests; and deliver the composite sample bottle to the PLWTP Lab. BC will perform this task during the weekends. Detailed instructions are provided as Exhibit D.

Samples requiring TKN analysis will be placed in the refrigerator separately by the PLWTP Lab. Every Monday, the EPMD Sampling Crew will take all samples requiring TKN analysis and deliver it to the NCWRP Lab for analysis before 16:00.

Composite samples will be tested for total phosphorus twice a week. The analysis will be conducted at PLWTP Lab by the EPMD Sampling Crew using the HACH method 27426.

Composite samples will also be tested for nitrate and nitrite nitrogen three times a week. Del Mar Analytical Laboratory (DMA) will conduct the analysis. Samples will be bottled and labeled by the PLWTP Lab. The EPMD Sampling Crew will deliver the bottles to BC San Diego office at the same day. DMA will pick up the samples from BC office at the same day by 16:00.

2. Meter Readings

The temperature, dissolved oxygen, pH, UVT, and turbidity of the influent, effluent and backwash waste streams from each BAF and Densadeg pilot unit will be measured and recorded daily using portable meters. The readings will be recorded in daily pilot test unit meter readings sheet provided (samples given in Exhibit E). The portable meters will be calibrated by the EPMD or BC staff. Meter instructions are also provided in Exhibit E.

During weekdays at 07:00 and 22:00, the PLWTP Operations and Process Control Staff will perform this task. On weekends, BC will perform this task at 07:00 and 14:00 only when BAF backwash is to be sampled. The PLWTP Operations and Process Control Staff will do it at 14:00 (during non-backwash weekend days) and 22:00 on weekend evenings.

Table 1

City of San Diego MWWD
BAF Pilot Study Sampling and Monitoring Program
Phase II

Analyte	Analytical Method	Analytical Equipment	Container	Volume (mL)	Preservative	Max Holding Time	Sampling Frequency	No. of Samples from Sampling Point (Phase II) 13-Inf	13-Inf-2 [e]	Biostyr 13-BSEff	Biostyr 3-BSBW	Biofor C 13-BFCEff	Biofor C 3-BFCBW	Comb. BW 3-CBW	Densadeg 3-Dinf	Densadeg 3-DS	DAFT Bench Scale 3-DAEff	DAFT Bench Scale 3-DAS	CEPT [b] 3-CEff	CEPT [b] 3-CS	Analysis per Day	Total Samples
DAILY SAMPLING																						
24-HR Time-Composited																						
BOD_5 (Total)	SM 5210-B	Lab	P, G	1,000	4-deg C	24h	EOD-1	X	X	X		X			X				X		4	140
$SBOD_5$ (Soluble)		Lab	P, G	1,000	4-deg C	24h	EOD-1	X	X	X		X			X				X		4	140
$CBOD_5$ (Carbonaceous)				1,000	4-deg C	24h	EOD-2	X	X	X		X			X (2/w)				X (2/w)		5	195
$SCBOD_5$ (SolubleCarbonaceous)		Lab	P, G	1,000	4-deg C	24h	EOD-2	X	X	X		X			X						4	140
COD	SM 5220-C	Lab	P, G	100	4-deg C, add H_2SO_4 to pH<2	28d	D	X	X	X		X			X				X		4	280
TSS	SM 2540-D	Lab	P, G	200	4-deg C	7d	D	X	X	X		X			X				X	X	4	280
VSS	SM 2540-E	Lab	P, G	200	4-deg C	7d	D	X	X	X		X			X				X	X	4	280
TS					4-deg C	7d										2X/d					2	140
VS					4-deg C	7d										2X/d					2	140
TKN	SM 4500-F	Lab	P, G	500	4-deg C, add H_2SO_4 to pH<2	28d	D	X	X	X		X			X						4	280
NH_3-N	EPA 350.3	Lab	P, G	500	4-deg C, add H_2SO_4 to pH<2	28d	D	X	X	X		X			X				X [c]		4	280
Orthophosphate (d)	SM 4500-P	Lab	P, G	100	4-deg C, add H_2SO_4 to pH<2	28d	D	X	X	X		X			X						4	280
Alkalinity	SM 2320-B	Lab	P, G	200	4-deg C	14d	D	X	X	X		X			X				X		4	280
Pilot Test Unit Instrument Readings			TOTAL =	3,800																		
Air flow	Pilot test unit instrument						D-NO; D-BO			X	X	X	X									
Air Pressure	Pilot test unit instrument						D-NO; D-BO			X	X	X	X									
Sample port pressure (P1, P2, P3, P4)	Pilot test unit instrument						D-NO; D-BO			X	X	X	X									
Backwash water pressure	Pilot test unit instrument						D-BO				X		X									
Media loss	Visual						D-NO; D-BO			X	X	X	X									
Conditions of screen	Visual						D-NO			X		X										
Backwash characteristics							D-BO				X		X									
Other observations							D-NO; D-BO			X	X	X	X									
Grab Samples-Portable Meter Readings																						
Temperature	Portable Meter	pH Meter					D	X	X	X		X			X		X					
Dissolved Oxygen	Portable Meter	DO Meter					D	X	X	X	X	X										
pH	Portable Meter	pH Meter					D	X	X	X	X	X			X		X					
Turbidity	Portable Meter	Turbidity Meter					D	X	X	X		X			X		X					
UVT	Portable Meter	UVT Meter					D	X	X	X		X			X		X					
EVERY OTHER DAY SAMPLING																						
Grab Samples																						
BOD_5 (Total)	SM 5210-B	Lab	P, G	1,000	4-deg C	24h	EOD				X		X	X							2	86
$SBOD_5$ (Soluble)		Lab	P, G	1,000	4-deg C	24h	EOD				X		X	X							2	86
COD	SM 5220-C	Lab	P, G	100	4-deg C, add H_2SO_4 to pH<2	28d	EOD				X		X	X							2	86
TSS	SM 2540-D	Lab	P, G	200	4-deg C	7d	EOD				X		X	X							2	86
VSS	EPA 160.4	Lab	P, G	200	4-deg C	7d	EOD				X		X	X							2	86
TS	EPA 160.3	Lab	P, G	200	4-deg C	7d	EOD				X		X	X							2	86
VS	EPA 160.4	Lab	P, G	200	4-deg C	7d	EOD				X		X	X							2	86
SETS (Settleable solids)	SM 2540-F	Lab	P, G	200	4-deg C	48h	EOD				X		X	X							2	86
			TOTAL =	3,100																		
OCCASIONAL SAMPLING																						
- TWICE PER WEEK																						
Imhoff Settling	Imhoff Cone	On-Site	Imhoff	1,000	N/A	Immed	OCC				X		X	X								
Supernatant																						
$CBOD_5$	SM 5210-B	Lab	P, G	1,000	4-deg C	24h	OCC				X		X	X							3	56
TSS	SM 2540-D	Lab	P, G	200	4-deg C	7d	OCC				X		X	X							3	56
VSS	EPA 160.4	Lab	P, G	200	4-deg C	7d	OCC				X		X	X							3	56
Solid																						
TS	EPA 160.3	Lab	P, G	200	4-deg C	7d	OCC				X		X	X							3	56
VS	EPA 160.4	Lab	P, G	200	4-deg C	7d	OCC				X		X	X							3	56
Densadeg Effluent During Co-settling																						
(hourly sampling during 7 hrs-use 24-bottle sampler)																						
BOD_5 (Total)	SM 5210-B	Lab	P, G	1,000	4-deg C	24h	OCC	X	X												7	70
$CBOD_5$ (Carbonaceous)				1,000	4-deg C	24h	OCC	X	X												7	70
TSS	SM 2540-D	Lab	P, G	200	4-deg C	7d	OCC	X	X												7	70
Densadeg Sludge Sampling During Co-settling																						
One more time in addition to daily sampling																						
TS					4-deg C	7d	OCC									X					1	10
VS	SM 5210-B	Lab	P, G	1,000	4-deg C	7d	OCC									X					1	10
MS2 Bacteriophage, Tot & Fecal Coliform, Enterococcus		Outside Lab			4-deg C	24h	OCC	X	X	X		X										100
- THREE TIMES PER WEEK																						
NO_3-N + NO_2-N	EPA 300.0	Outside Lab	P	125	4-deg C	48h	OCC	X	X	X		X										90
- ONCE A WEEK																						
Bioassay testing							OCC			X		X										8
Biomass Mesurement		Lab					OCC-NO														8	80
- FIVE TIMES FOR WHOLE STUDY																						
Collimated Beam Testing		Outside Lab					OCC			X		X										5
- FOR TWO WEEKS																						
DAFT Bench Scale Study																						
Supernatant																						
$CBOD_5$	SM 5210-B	Lab	P, G	1,000	4-deg C	24h	OCC										X				2	24
TSS	SM 2540-D	Lab	P, G	200	4-deg C	7d	OCC										X				2	24
Solid																						
TS	EPA 160.3	Lab	P, G	200	4-deg C	7d	OCC											X			2	24
VS	EPA 160.4	Lab	P, G	200	4-deg C	7d	OCC											X			2	24
Continuous Turbidity During Stress Testing	Portable Meter	Turbidity Meter					OCC			X		X										

(a) See Figure 2 for schematic showing locations
(b) Data will be obtained from the City laboratory based on Normal PLWTP Monitoring Program for NPDES Permit
(c) Outside laboratory will conduct this analysis
(d) No Ortho-P analysis on national holidays and on Sundays
(e) Starting on 10/12/04, 13-Inf-2 will be tested for the noted anaytes for 1 to 2 weeks.

MAX NO. OF ANALYSES DONE BY CITY LAB ON ANY GIVEN DAY 109

D: daily
D-NO: Taken during normal operation only
D-BO: Taken during backwash operation only
EOD: every other day
EOD-1: every other day, pair samples-day 1
EOD-2: every other day, pair samples-day 2
OCC: occasional
OCC-NO: occasional, but only during normal operations

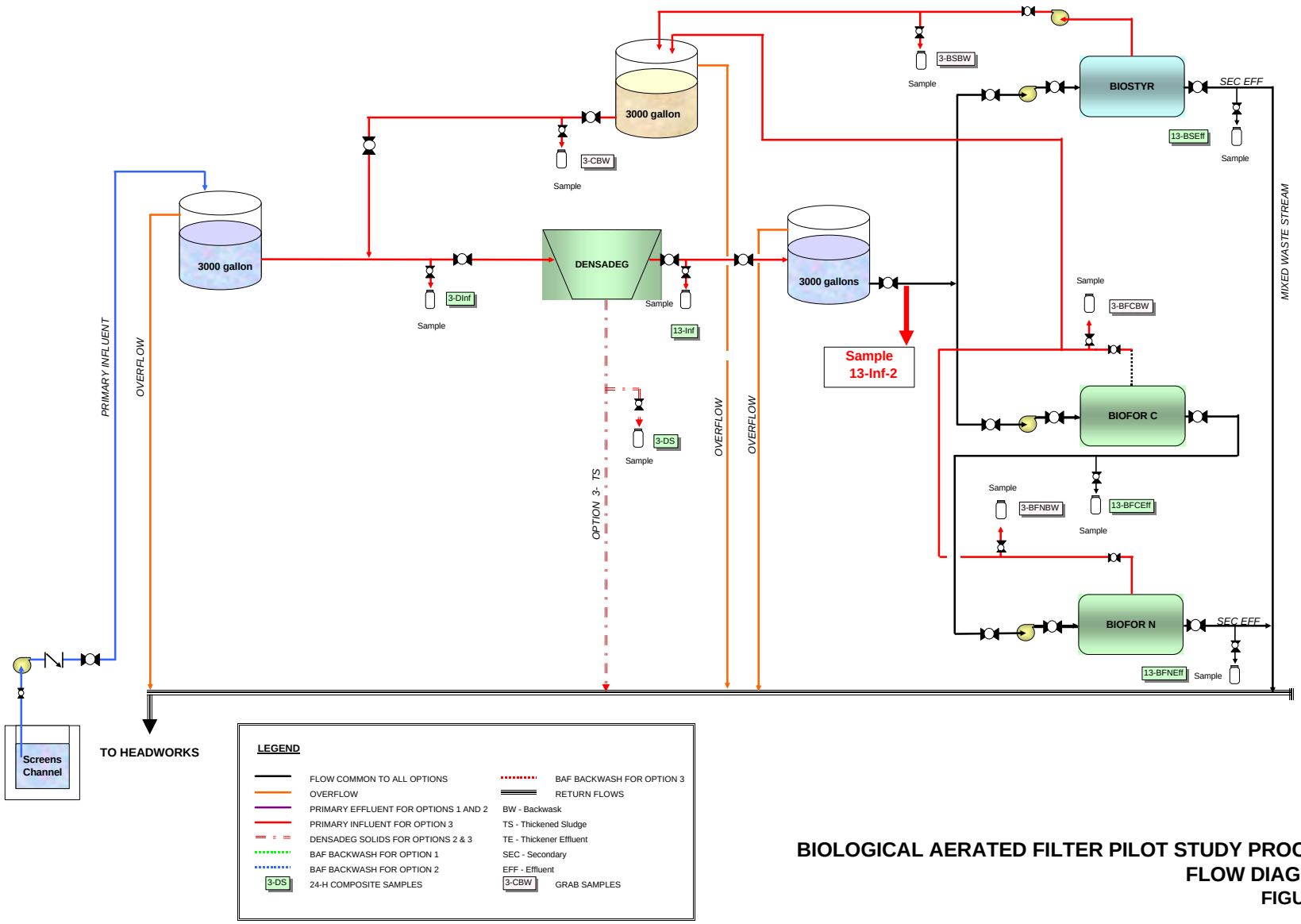

BIOLOGICAL AERATED FILTER PILOT STUDY PROCESS FLOW DIAGRAM
FIGURE 2

3. Pilot Test Unit Instrument Readings

Every day, the sampling crew will record information taken from each of the BAF and Densadeg pilot test unit instruments. The instrumentation differs between the pilot units. The sampling crew will use the daily pilot test unit instrument readings log sheet provided in Exhibit E as a guide on the type of data to be recorded.

During weekdays at 07:00 and 22:00, the PLWTP Operations and Process Control Staff will perform this task. On weekends, BC will perform this task at 07:00 and 14:00 only when BAF backwash is to be sampled. The PLWTP Operations and Process Control Staff will do it at 14:00 (during non-backwash weekend days) and 22:00 on weekend evenings.

4. Headloss Measurements

Pressure transducers have been installed on each BAF pilot unit to determine the pressures at four locations along the height of the bed: one at the bottom, one near the top, and two in between in order to measure the headloss across BAF media. The aim of using these additional ports is to determine points of plugging along the media and possibly determine the locations where biomass growth and influent solids filtration occur over the period between backwashes.

EMPD staff will perform this task, including calibration of the pressure transducers and download of data from the data logger. EPMD will provide BC with the data daily via e-mail. EPMD will have its own laptop download and store the data. The same laptop will be used by BC to download data during the weekends. Detailed instructions are provided in Exhibit F.

B. EVERY OTHER DAY SAMPLING AND MONITORING

The following activities will be performed every other day.

1. Backwash Sampling and Monitoring

Backwashing of the BAF pilot test units will be scheduled on a specific time interval (initially every 24 hours) and set at the following time when the sampling crew is present:

09:00 BIOSTYR
10:00 BIOFOR C

Backwash times will be adjusted so that only one BAF unit is backwashed at a time.

Every other day backwash water will be collected in a backwash tank, mixed and then sampled. Mixing will be provided through a pump mixing system (see Figure 3 for a schematic of the mixing system). The mixing pump will be turned on after backwash is completed. The pump will be run for some time (about 3-5 minutes) to be sure that complete mixing is achieved in the tank. Backwash sample will be taken from the

discharge line of the mixing pump. After the sample is taken, the pump will be turned off, the backwash tank will be drained and hosed off to clean the tank for the next backwash event. Detailed instructions are provided in Exhibit G.

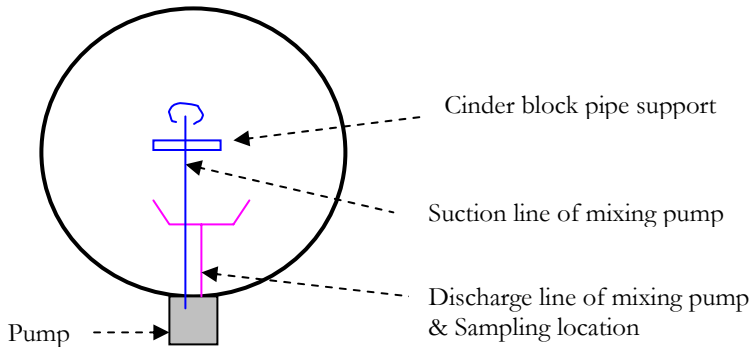

Figure 3. Schematic of mixing system in backwash tank

2. Evaluation of Co-settling of Raw and BAF Solids

On the days when backwash samples are not tested individually, backwash water from each BAF units will be combined in the backwash tank. Combined backwash water will be grab sampled as described above. Combined backwash water will be sent to the Densadeg inlet feed line. The mixed backwash water and raw wastewater will be fed to the Densadeg pilot unit.

During the non-backwash days, hourly meter readings (described in Section A.2) of the Densadeg effluent will be conducted about 1 hour before the addition of the BW and 1 hour after the addition of the BW. The co-settling period is anticipated to take no longer than 3 hours. A continuous turbidity meter may be employed for this purpose.

EPMD is responsible for this activity during the weekdays and BC will be performing the task on weekends.

C. OCCASIONAL SAMPLING AND MONITORING

The following activities will be performed occasionally during the pilot test study. The frequency of these tests is shown in Table 1.

1. Settleability Test

Two times per week, additional backwash samples including the combined backwash sample will be taken to perform the settleability test. This will consist of pouring a 1-L sample into an Imhoff Cone and recording the time and location of the Clearwater and solids interface. An SVI value will eventually be derived per the methodology described in Exhibit H. Log sheets to record readings are also provided in Exhibit H.

After performing the Imhoff test, the supernatant will be and tested for $CBOD_5$, TSS, and VSS. Likewise, the settled solid in the Imhoff cone will be tested for TS and VS.

The EPMD/BC sampling crew assigned for that day will perform this analysis.

2. Measurement of Biomass

The total biomass adhered to the media in both Biostyr and Biofor units will be measured during the study at more that one elevation. Standard operating procedure for biomass media sampling and analysis is given in Exhibit I.

The BC team will coordinate with the PLWTP Lab to perform this analysis.

3. Hourly Discrete Densadeg Effluent Sample Collection

Two times per week, 24-bottle sampler will be used instead of the composite sampler in order to sample the Densadeg effluent (influent to the BAF units). Sampling will be performed on the days only when co-settling of raw wastewater and combined backwash water occurs. It has been estimated that co-settling will last about 3 hours. In order to observe the effect of co-settling on the effluent quality, hourly samples will be taken by 24-bottle sampler. The samples collected two hours before and two hours after the co-settling (total 7 bottles) will be tested for BOD_5, $CBOD_5$, TSS, as noted in Table 1. Remaining bottles will be combined and tested for the analytes listed in Table 1 for 13-Inf. In addition, on the days only when co-settling of raw wastewater and combined backwash water occurs, Densadeg sludge will be grab sampled two times a day; at 7:00 and at 14:00 and each will be tested for TSS and VSS.

4. Collimated Beam Testing

To meet future standards, it maybe necessary to disinfect the secondary effluent produced by the full-scale BAF units. Disinfection using ultraviolet light is desirable because of its reduced hazards and absence of unpleasant byproducts.

The secondary effluent from the BAF pilot units will be tested to determine the UV dosage needed to inactivate bacteria and viruses present. Five collimated beam testing will be performed on the effluent streams of the Biostyr and Biofor-C pilot units in Phase II.

BC will conduct the sampling for this analysis. A contract laboratory will perform this analysis.

5. MS2 Bacteriophage Testing

Once PLWTP convert to secondary treatment, virus testing on the effluent will likely be required. Therefore, a limited virus testing will be performed during the study. MS2 Bacteriophage testing will be performed twice per week on influent and effluent lines of the Biostyr, and Biofor-C pilot units.

EPMD will conduct the sampling for this analysis. The City will perform the analysis.

6. Bioassay

Ultimately, the effluent from the PLWTP must pass the toxicity requirements for discharge to the Pacific Ocean. The BAF effluent will be tested for Giant kelp once a month and for Mysidopsis bahia twice a month. These are the same organisms currently used by the City to determine the toxicity of the advanced primary effluent currently being discharged.

EPMD will conduct the sampling for this analysis. The City will perform the bioassay.

7. Continuous Turbidity Reading During Stress Testing

Turbidity of the effluent streams of the Biostyr, and Biofor-C pilot units will be measured continuously two times during the Phase II. Turbidity meter with a data logger will be used for this purpose.

The continuous turbidity meter will also be cycled through the different BAF pilot units to track effluent turbidity continuously. The location of the meter will be tracked using the log sheets in Exhibit J.

The BC/EPMD team will conduct this testing and monitoring.

8. DAFT for Backwash Water Thickening

Different thickening alternatives were discussed in the Technical Memorandum. Two of them were dedicated thickening for BAF backwash, and co-thickening of the blended primary and BAF sludge. A bench scale dissolved air flotation (DAF) unit will be tested for evaluating these alternatives. In addition to these alternatives, thickening of the co-settled BAF backwash and primary sludge with Densadeg unit will be tested. It should be noted that the purpose of bench scale DAFT unit is to determine floatability of sludge, thickness of the sludge blanket, and percent solids recovery. This preliminary study is not for design purposes.

In the first part of the study, performance of a bench scale DAFT unit will be tested for dedicated thickening of Biostyr and Biofor-C backwash water. Use of DAFT will provide valuable information about thicken ability of the sludge since pilot scale Densadeg unit cannot be operated with the BAF pilot units as considered in Option 2. DAFT tests will be performed on the day when backwash samples are taken which is every other day. Bench scale DAFT is a batch unit; therefore thickening of backwash water will be performed in two batches a day; one for Biostyr and one for Biofor-C backwash water.

In the second part of the study, thickening of the co-settled BAF backwash and primary sludge will be evaluated. For this purpose sludge coming out of the Densadeg unit will be sampled and tested for thickenability with the DAFT apparatus.

Finally, co-thickening of the blended primary and BAF sludge will be tested. For this purpose, preparation of the mixture of primary sludge and BAF sludge is needed. First BAF backwash water will be sampled in a 5-gallon bucket. Polymer will be added to the bucket at the optimum dosage, which will be determined at the beginning of

DAFT study. Polymer and backwash water will be first flash mixed, and then slowly mixed for 15 minutes. After settling the sludge, supernatant will be discarded and sludge will be saved. If necessary this procedure will be repeated in order to obtain volume enough to run the DAFT test. Secondly, CEPT sludge will be sampled. Both CEPT and BAF sludge will be tested for TSS with a Microwave Solids Detector, which gives the result in few minutes. In the Technical Memorandum, CEPT and BAF sludge production was calculated as 479,000 lb/day and 172,000 lb/day, respectively. According to these values, in the co-thickening option dry mass ratio of CEPT sludge to BAF sludge is about 2.78. Therefore, based on the TSS results, necessary sludge volumes will be calculated in order to prepare the primary and BAF sludge blend at the dry solid ratio of 2.78 to simulate the real case situation. Then, this blend will be tested for thickenability with the bench scale DAFT unit.

Bench scale DAFT unit will be provided by BC, and set up in PLWTP laboratory. Test will start mid July, and last for two weeks. Several batches will be performed to find the optimum operating condition. DAFT supernatant and solid will be tested for CBOD, TSS and TS, VS, respectively as indicated in Table 1. Operating protocol and data log sheets for DAFT study is given in Exhibit K

9. Filter Flocculated BOD Analysis

Chemically Enhanced Primary Treatment (CEPT) influent, effluent and Densadeg effluent MAY be analyzed for filter flocculated BOD in Phase II. This analysis is necessary to understand the operation of the Densadeg unit as compared to CEPT. Part of the sludge is recycled in the Densadeg. Sludge recycling increases the retention time of organics in the unit, which results in hydrolysis of the organics, which eventually contributes to SBOD. This means Densadeg might increase SBOD loading to the BAF units. In addition, Densadeg effluent might have higher SBOD concentration than CEPT effluent.

Measuring the filter flocculated BOD will provide information about how much colloidal BOD – a fraction of soluble BOD (SBOD) – is removed by CEPT or Densadeg. This will enable us to distinguish the colloidal removal from the soluble removal across the two units. However, this will be a special analysis to be run only if SBOD results indicate any problem in the operation of Densadeg.

Filter flocculated BOD analysis will be done by the PLWTP laboratory. If it is found out later that it is necessary to run filter flocculated BODs, Imhoff tests will be eliminated from the study in order to lower the load of the PLWTP laboratory. Complete procedure for filter flocculated BOD has not been developed yet, however it is going to be based on two papers given in Exhibit L. Frequency of the test will be determined later.

10. Assessment of Oxygen Transfer Efficiency

Oxygen transfer efficiency might be assessed in both Biofor-C and Biostyr columns in Phase II. Schedule will be determined later.

D. ADDITIONAL DATA (Normal PLWTP Monitoring Program for NPDES Permit)

The City currently monitors the advance primary effluent from the existing plant to satisfy its NPDES permit. The sampling crew will collect from the City laboratory data on the following parameters:

Total BOD, Soluble BOD, Ammonia, COD
Total and volatile solids (bi weekly)
Total and dissolved sulfides
Conductivity
Alkalinity
Total hardness
Calcium hardness
Magnesium hardness
Sulfate
Phosphate
Heavy Metals (weekly)

Information on these parameters will be used to compare advance primary effluent data with similar data for the influent to the pilot plant and possibly explain any anomalies or oddities that may be observed during the course of the test.

VI. OPERATION AND MAINTENANCE

In Phase II, ODI will be conducting training sessions for the City and BC personnel responsible for the operation of the Densadeg pilot test facility. They will be providing O&M manuals, which will be placed in a covered container at the pilot test site. A sample O&M manual for the BIOFOR, BIOSTYR and DENSADEG units are included in this protocol as Exhibit M.

Changes in operating parameters will be performed by the appropriate BC and City personnel after consultation with the respective vendors. Changes to the testing program will be performed only after discussing the previous data results and project goals and directions amongst the City and BC team. This discussion is anticipated to occur during the monthly meetings (see Section IX for more details).

Phase II testing was divided into 8 periods depending on operational conditions of Densadeg. The following section explains the purpose and duration of each operational condition.

Densadeg Optimization: The chemical (coagulant and polymer doses) optimization testing should take place first in order to determine the coagulant and polymer dose rates to utilize for the other tests. Test runs should be repeated to obtain high confidence level of results. Preliminary chemical dose optimization will be performed by IDI before the pilot study begins. This jar testing will establish optimal range of coagulant dose plus polymer type and dosing range.

Run 1: Duration 10 days

The purpose of this run is to determine if Densadeg can achieve same performance as the current primary sedimentation basins. Densadeg operation will be optimized at 10.25 gpm/ft^2 for primary clarification during this period. In addition, reactor sludge concentration will be optimized (normally around 1.0 g/L); and sludge recycle will be set (typically 3%). At the end of this period, the aim is to determine the best quality effluent at 10.25 gpm/ft^2.

Run 2: Duration 7 days.
The reason for this run is to evaluate reduction of coagulant (1 dose tested per day) on Densadeg effluent quality and impact on the BAF units at 10.25 gpm/ft^2. Sludge concentration and sludge recycle will be varied as needed to optimize the performance for given coagulant dose.

Run 3: Duration 7 days

Part 1: Duration 2-3 days

The purpose of this run is to evaluate the lack of coagulant and polymer on Densadeg effluent quality and impact on BAF at 10.25 gpm/ft^2. For example, the chemicals can be shut off for 4 hours, the change in effluent quality can be monitored, then the chemicals can be turned back on and the time necessary to stabilize at previous performance can be monitored. Run test twice (2 days).

Part 2: Duration 2-3 days

The reason is to evaluate the lack of sludge recycle, and therefore reduced sludge concentration in the reactor on Densadeg effluent quality and impact on BAF at 10.25 gpm/ft^2. Run test twice (2 days).

Run 4: Duration 7 days
The aim of this run is to determine impact of high-rise rate (12.4 gpm/ft^2) on Densadeg and BAF performance for primary clarification. Reactor sludge concentration will be optimized; and sludge recycle will be set in function of reactor concentration during this period. In addition, coagulant and polymer doses will be optimized to achieve the best quality effluent at 12.4 gpm/ft^2.

Run 5: Duration 7 days
The aim is to determine impact of low-rise rate (5 gpm/ft^2) on Densadeg and BAF performance for primary clarification. Extracted sludge concentrations achievable will be evaluated when operating at varying depths of sludge bed during this run. In addition, reactor sludge concentration will be optimized; sludge recycle will be set in function of reactor concentration and coagulant and polymer doses will be optimized in order to achieve the best quality effluent at 5 gpm/ft^2.

Run 6: Duration 6 days
This period is to optimize Densadeg at 10.25 gpm/ft^2 for combined primary and backwash waste (5%) clarification and to determine best quality effluent at 10.25 gpm/ft^2, and impact on sludge concentration. During this period, reactor sludge concentration will be optimized; sludge recycle will be set in function of reactor concentration and coagulant and polymer doses will be optimized in order to achieve the best quality effluent. It should be noted that each "combined" test run lasts for approximately 10 hours.

Run 7: Duration 14 days
This run is the same as Run 6 with the exception that added backwash water is 10% of the Densadeg inlet flow. Each "combined" test run will last for approximately 4 hours.

Run 8: Duration 5 days
This run is the same as Run 6 with the exception that added backwash water is 15% of the Densadeg inlet flow. Each "combined" test run will last for approximately 2 hours.

Biostyr, and Biofor-C units will be operated at average design condition during Phase II, which is at 2 gpm/sf.

According to the vendors' proposals, there are multiple options for backwash sequence for each unit. Each option will be evaluated during the pilot test and the appropriate backwash sequence will be decided at the end of the study. The expected backwash air requirements for each BAF unit are shown in Table 2.

Table 2. Backwash air supplied to the units

Unit	Backwash air (scfm)
Biofor-C	16.8
Biostyr	3.13

VII. HEALTH AND SAFETY

A copy of Brown and Caldwell's Health and Safety Plan (BCHSP) is attached as Exhibit N. All Brown and Caldwell staff shall strictly follow the guidelines provided in the BCHSP.

The City is responsible for its own H&S protocol.

VIII. EMERGENCY

All personnel working at the PLWTP on the pilot test site will abide by the contingency and emergency procedures contained in the November 19, 2003 version of the PLWWTP Contingency Plan (Exhibit O). All personnel will be familiar with the plan prior to the start of any activity. A copy of the plan will be always available at the pilot test site.

During an emergency, the following people shall be contacted in the order provided:

City

Engineering

1. Pete Wong
   Work: (858) 292-6475
   Cell: (619) 980-5296
2. Amer Barhoumi
   Work: (858) 292-6421
   Cell: (619) 922-6421
3. Jerry Williams
   Work: (619) 221-8746

Cell: (619)980-8047

Operations

1. Royal Manaka
   Facility : 221-8740
   Home or 24 hr.: (619) 588-4241
2. For all others, see Emergency Notification Phone Roster, pg 7 of Exhibit I.

Brown and Caldwell

1. Victor Occiano
   Work: (858) 571-6715
   Cell: (619) 203-3077
2. Joshua Newman
   Work: (858) 571-6763
   Cell: (619) 948-7779
3. Ray Fakhoury
   Work: (858) 571-6712

IX. MONTHLY REPORTS

At the end of each month, Brown and Caldwell will generate a summary of the data collected for that month. Monthly reports will include influent and effluent characterization data, flows, loading rates, operating conditions, copies of logbook entries, and analysis results of the monthly testing with highlighting events critical to the evaluation. ODI and US Filter will also receive a copy of their respective data to facilitate discussions regarding the performance of their respective pilot units. Data will be transferred to the vendors weekly.

Decision-making during the pilot testing shall occur during a monthly meeting with the project team to establish direction. Attendees will include Brown and Caldwell, City and possibly the vendors. The focus will be adjusting future test conditions based on current results. The operation of the pilot test units may be altered if the monthly data shows particular operating condition must be evaluated further. Monthly meetings will be held alternately between MOC2 and PLWTP.

The PLWTP/City Lab shall provide Brown and Caldwell with weekly reports in Excel format of parameters analyzed up to the date of the report. The information shall be transmitted via e-mail to the following addresses:

Victor Occiano: vocciano@brwncald.com
Joshua Newman: jnewman@brwncald.com

X. ROLES AND RESPONSIBILITIES

Same roles and responsibilities as Phase I.

EXHIBIT A

PILOT TEST FACILITY DESIGN DRAWINGS

Refer to Phase I Protocol

EXHIBIT B

PILOT TEST UNIT SPECIFICATIONS

Refer to Phase I Protocol

ONDEO Degremont, Inc.

Technical Data Sheet
DensaDeg® Pilot Plant
(100 GPM Unit)

Description:
A complete clarification system including chemical feeders, influent and sludge pumps, operational instruments and controls. The unit includes facilities to easily vary flow, recycle rate, blanket depth, blowdown frequency and duration and other process variables.

Weight:
- 15,000 lbs. (shipping)
- 45,000 lbs. (operating)

Overall Plan Area:
- 7'0" x 11'-1 1/2"

Overall Height:
- 20'-0"

Electrical Requirements:
- 208-volts, 3-phase, 60 amps
- Reactor Turbine Drive: 2.0 hp
- Scraper Drive: 0.5 hp
- Raw Water Pump: 2.0 hp
- Sludge Recirculation Pump: 5.0 hp
- Lime Slurry Feed Pump: 1/3 hp
- Rapid Mix Drive: 2.0 hp

Connections:
- Influent: 2" hose barb connector
- Effluent: 4" flanged
- Sludge Blowdown: 2" hose barb
- Sink Drain: 2" hose barb

Other systems are powered by a 208-volt, 3-phase to 120-volt single-phase converter, and include chemical feeders, blowdown, and lime feed timers, and flow meters for sludge recycle and raw water.

Process Data:

			Retention Times			
Flow	**Rise Rate**	**Rapid Mix**	**Reactor**	**Thickener**	**Tubes**	**Total**
(GPM)	**(GPM/SQ.FT)**	**(MIN)**	**(MIN)**	**(MIN)**	**(MIN)**	**(MIN)**
50	4.6	8	22	36	6	72
75	6.9	6	17	27	5	55
100	9.3	4	11	18	3	36

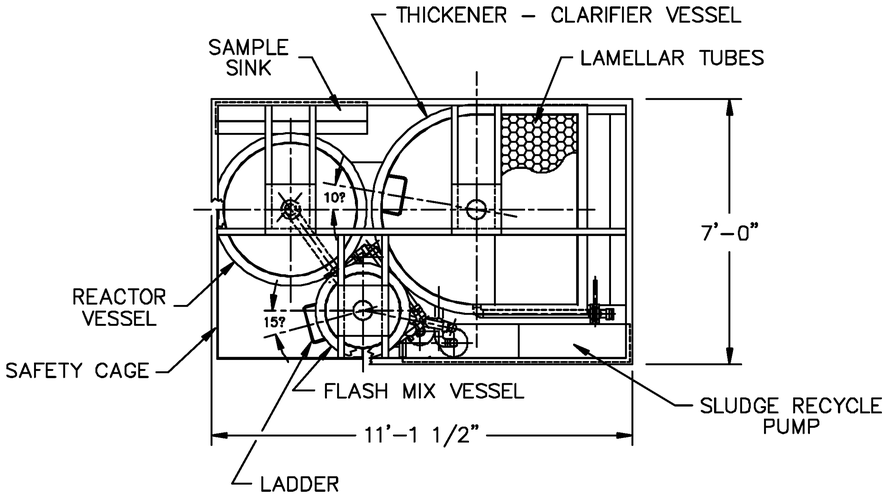

PLAN VIEW

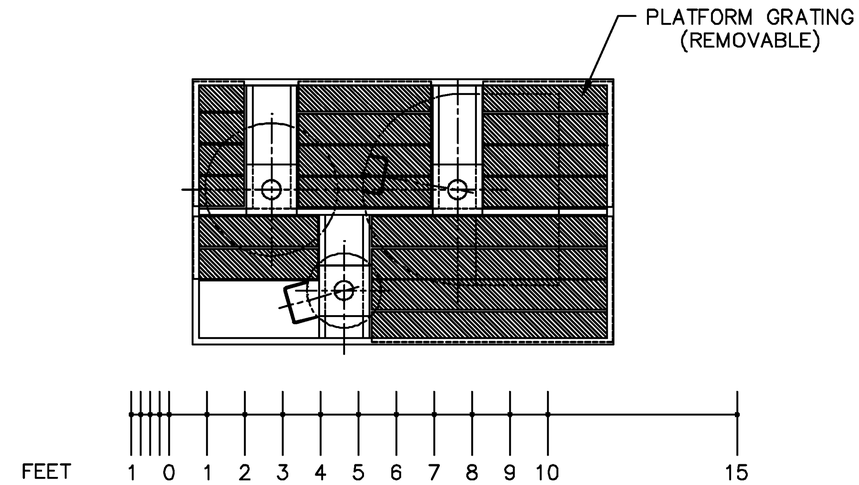

PLAN VIEW

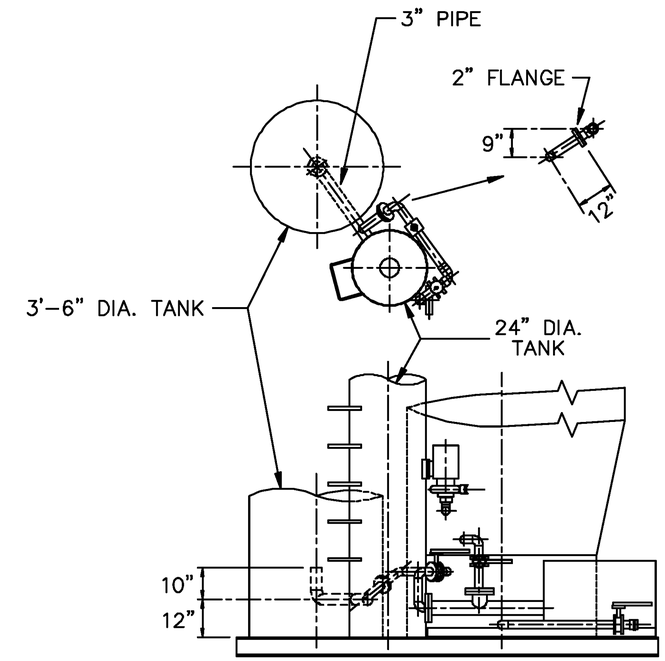

DETAIL

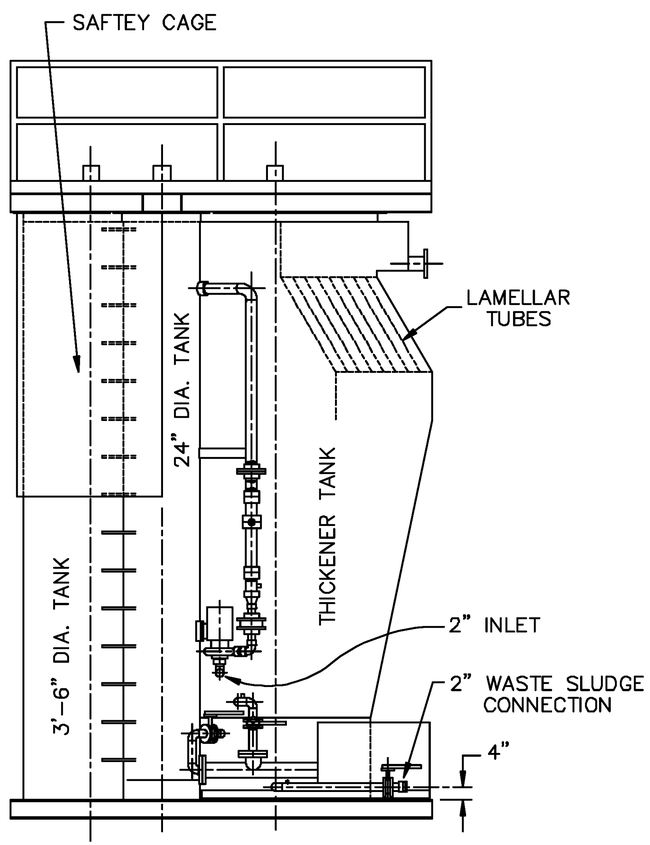

SIDE ELEVATION VIEW

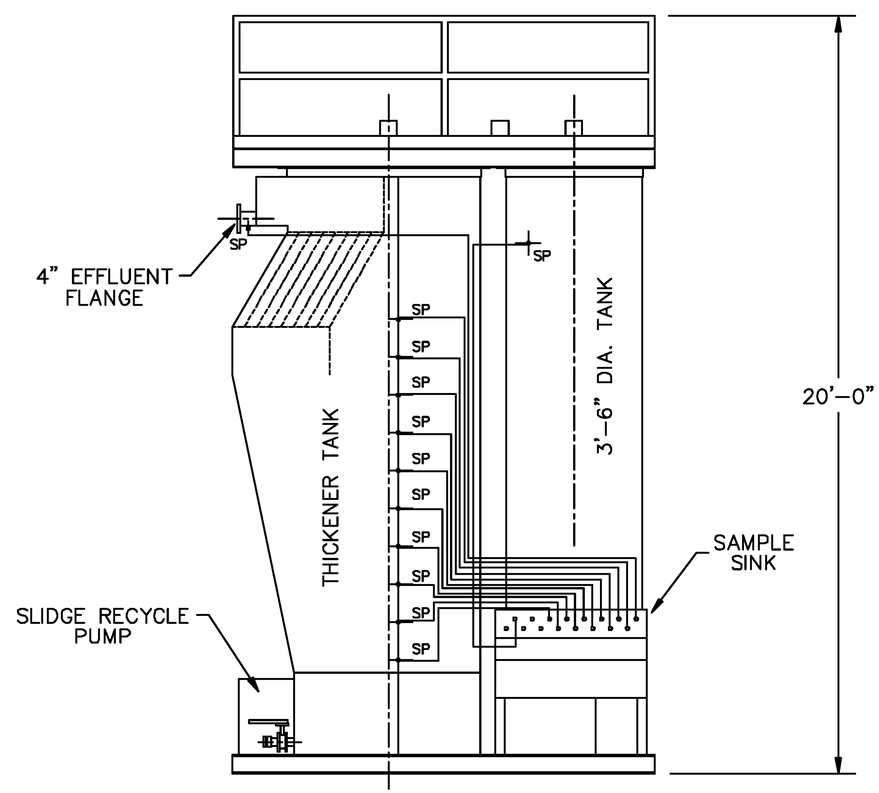

SIDE ELEVATION VIEW

THIS DRAWING CONTAINS INFORMATION PROPRIETARY TO ONDEO DEGREMONT, INCORPORATED! IT IS SUBMITTED IN CONFIDENCE AND IS TO BE USED SOLELY FOR THE PURPOSE FOR WHICH IT IS FURNISHED AND RETURNED UPON REQUEST. THIS DRAWING AND SUCH INFORMATION IS NOT TO BE REPRODUCED, TRANSMITTED, DISCLOSED, OR USED OTHERWISE IN WHOLE OR IN PART WITHOUT THE WRITTEN AUTHORIZATION OF ONDEO DEGREMONT, INCORPORATED.

REV	REVISION DESCRIPTION	DRAWN	CHECKED	APP	DATE

REV	REVISION DESCRIPTION	DRAWN	CHECKED	APP	DATE
–	ORIGINAL ISSUE				mm/yy

PROJECT INFORMATION

ONDEO Degremont, Inc.
Post Office Box 71390
Richmond, Virginia 23255-1390
PH: (800) 446-1150

ONDEO Degrémont

	BY	DATE
DRAWN		
CHECKED		
APP		
REF.		

DO NOT SCALE
SCALE NONE

DENSADEG PILOT PLANT
100 G.P.M. UNIT
GENERAL ARRANGEMENT

SIZE D | DWG NO. P555-3 | REV. –