Consultant's Guide to Park Design & Development

City of San Diego
Park & Recreation Department
November, 2010

THE CITY OF SAN DIEGO • STATE OF CALIFORNIA •
SEMPER VIGILANS

ACKNOWLEDGMENTS

The Consultant's Guide to Park Design & Development is an evolving document. The Park and Recreation Department would like to thank all the individuals, organizations and City staff who have contributed to its success.

CITY OF SAN DIEGO PARK AND RECREATION DEPARTMENT

Stacey LoMedico, Park and Recreation Director
Scott Reese, Assistant Park and Recreation Director
Clay Bingham, Deputy Director, Community Parks I Division
David Monroe, Deputy Director, Community Parks II Division
Kathleen Hasenauer, Deputy Director, Developed Regional Parks Division
Mark Marney, Golf Operations Manager, Golf Course Operations Division
Chris Zirkle, Deputy Director, Open Space Division

THE CITY OF SAN DIEGO • STATE OF CALIFORNIA •
SEMPER VIGILANS

Consultant's Guide to Park Design & Development

"We enrich lives through quality parks and programs."

City of San Diego Park and Recreation Department's Vision Statement

Prepared by:
Administrative Services Division
Park and Recreation Department
202 C Street, MS 35
San Diego, CA 92101-3860

November, 2010

THE CITY OF SAN DIEGO • STATE OF CALIFORNIA •
SEMPER VIGILANS

TABLE OF CONTENTS

	TITLE	Page Number
1.	**INTRODUCTION**	
1.1	Intent	1
1.2	Goals	1
1.3	Application	2
1.4	Other Regulating Documents	2
1.5	Description of Changes	2
1.6	Types of Parks	2
2.	**PARK DESIGN STANDARDS**	
2.1	General Standards	5
2.2	Site Planning	5
2.3	Grading and Drainage	6
2.4	Paving, Walkways and Mow Curbs	7
2.5	Trails	8
2.6	Fencing and Walls	9
2.7	Parking Areas	10
2.8	Trash Enclosures	11
2.9	Site Furniture	11
2.10	Signs	13
2.11	Playgrounds and Equipment (Tot Lots)	13
2.12	Prefabricated Picnic Shelters	20
2.13	Sports Courts	20
2.14	Multi-Purpose Fields (Softball and Soccer Turf Areas)	23
2.15	Site and Sports Lighting	25
2.16	Irrigation	29
2.17	Planting	36
2.18	Artificial Turf	39
2.19	Requirements and Standards for All Buildings	41
2.20	Comfort Stations	42
2.21	Recreation Centers	44
2.22	Aquatics Facilities	45
2.23	Graffiti Protection	49

3. GRAPHIC AND DRAFTING STANDARDS
3.1 General Development Plans (GDPs) 49
3.2 Construction Plans 50
3.3 As-Built Plans 61

4. PROJECT PROCESS, SUBMITTALS AND APPROVALS
4.1 General Development Plans (GDPs) 63
4.2 Construction Plans 66
4.3 As-Built Plans 67

5. APPENDICES
Appendix A Park and Recreation Board Policies:
No. 1001 'Naming of Parks'
No. 1011 'Graphic Presentations'
No. 1302 'Park Signs'

Appendix B Council Policies:
No. 200-14: Landscape Design for Park and Recreation Facilities
No. 600-33: Community Input and Notification for City-Wide Park Development Projects
No. 900-14: Sustainable Building Policy

Appendix C Reference Documents

Appendix D Standard Symbols and Legend for Irrigation Systems

Appendix E Approved Manufacturers and Products List

Appendix F Crime Prevention through Environmental Design (CPTED)

Appendix G Standards and Specifications Guidelines from Facilities Division

Appendix H Standard Park Details:
A. Multi-Purpose Courts
B. Tennis Courts
C. Softball Field and Backstop
D. Tot Lots

Appendix I Disapproved Play Equipment

Appendix J Joint Use Checklist

Appendix K Trail Policies and Standards

Appendix L Policy on Avoiding Use of Non-Native Invasive Plants in Park and Recreation Projects

Appendix M General Development Plan Border

Appendix N Sample General Development Plan

PREFACE

The Consultant's Guide to Park Design and Development (Consultant's Guide) is prepared by the Administrative Services Division of the Park and Recreation Department. This new edition, dated November 2010, replaces the last published edition dated January, 2005. The Park and Recreation Department will update the Consultant's Guide on an as-needed basis. The Appendices found at the back of the Consultant's Guide will be updated on a yearly basis. This document can be obtained from the City web site at www.sandiego.gov/park-and-recreation.

This document is a guideline for use by City staff, design consultants and the general public in the design and development of improvements for City parks. These guidelines support the City's General Plan and Policy Documents but are subject to change due to changes in local, State and Federal laws, and changes in City policy or administration.

The Park and Recreation Department is dedicated to the high quality of this publication and desires to correct any errors, omissions or ambiguities. If you have any corrections, additions or suggestions you would like to submit for consideration to be included in the next publication, please send them in writing to:

Consultant's Guide to Park Design & Development
Park and Recreation Department
City of San Diego
202 C Street, M.S. 35
San Diego, CA 92101

Or submit them by e-mail to AskParks@sandiego.gov

THE CITY OF SAN DIEGO • STATE OF CALIFORNIA •
SEMPER VIGILANS

1. INTRODUCTION

1.1 INTENT

The Park and Recreation Department has developed the Consultant's Guide to Park Design and Development (Consultant's Guide) to establish general standards, guidelines and criteria for the design and development of improvements in City parks and open spaces. The Consultant's Guide is not a substitute for professional experience. Sound judgment must be exercised in the application of the standards to specific circumstances. The standards do not preclude the use of different methods when special conditions or site specific conditions are a factor and when proper authorization is obtained.

The Park and Recreation Department encourages "partnering", the creation of a relationship between the Park and Recreation Department, the City Project Manager and the Consultant, which promotes achievement of these standards and quality parks. In this respect, City Project Managers and Consultants are encouraged to take the time at the start of a project to identify common goals, lines of communication and a commitment to cooperative problem solving.

If a major deviation from the standards is necessary or desirable the, the Park and Recreation Department shall be informed in writing so the change can be evaluated for approval, and as a possible future revision to the Consultant's Guide. Any deviations from the standards established in this Consultant's Guide must be approved in writing from the Park and Recreation Department.

1.2 GOALS

The Park and Recreation Department ensures quality parks by basing designs on the following goals:

Aesthetics: Parks should project a positive image and establish a permanent character for the community and City. Park designs should provide a sense of arrival with reference points to promote circulation. They should provide places for groups and individuals for both formal and impromptu events. They should indicate nature through seasonal changes and provide something unique, obvious, complex and simple. They should provide human and monumental scale and should be visible from a distance. Overall, a sense of place and community should be created through the design of each Park.

Function: Parks should be designed for all community members to use and enjoy the facilities. Parks must also be functionally designed for the people who maintain the facilities. The most current products and industry standards should be applied to the park's design.

Economics: Parks should be designed for the allocated budgetary considerations and to provide economical means of maintaining the park.

1.3 APPLICATION

The Consultant's Guide applies to all parks, rights-of-way, maintenance assessment districts (MADs), gas tax medians and open spaces that are to be maintained by the Park and Recreation Department or a City Maintenance Assessment District. This includes all new parks, retrofitting existing parks, (Capital Improvement Projects), parks built using public funds (referred to as Public Projects), parks built using private funds and turned over to the City (referred to as Turn-Key Projects or Developer Built Projects), parks that are part of a joint use agreement and parks within City open space areas.

1.4 OTHER REGULATING DOCUMENTS

The design of parks shall also include the standards and requirements of the cited reference documents found in Appendix C. If conflicts arise between the Consultant's Guide and other governing documents, contact the Park and Recreation Department for clarification.

1.5 DESCRIPTION OF CHANGES

In general, the 2010 Consultant's Guide to Park Design and Development has been updated to reflect current local, State and Federal requirements. Formatting and numbering has changed as well. Park and Recreation standard details have been updated and added to the Appendix.

1.6 TYPES OF PARKS

The City of San Diego provides numerous types of parks for residents and visitors: 1) Resource-Based Parks, 2) Population-Based Parks, 3) Special Recreational Parks, 4) joint use parks, 5) Maintenance Assessment District parks, and 6) open space parks. Resource-based parks serve users from the entire city and elsewhere, and are located at or centered on natural or man-made features. Beaches (Mission Bay Park), historical sites (Balboa Park), and natural canyons and water courses (Mission Trails Regional Park), are examples of this type of park. Population-based parks are intended to serve the local daily needs of residential areas. Where possible they adjoin schools in order to share facilities, and ideally are within walking distance of the residences within their service area. The City also provides other special and smaller recreational parks that are neither population-based nor resource-based; these include developed parks within open space, plazas, large and small landscaped areas, and pocket parks. Joint use parks are partnerships between the City of San Diego and a school district wherein the contributions of land, improvements and maintenance are shared equally to provide the community and school with enhanced recreational opportunities. Maintenance Assessment District Parks are generally parks that are provided above and beyond the requirements identified in the General Plan, and are maintained through a special assessment of nearby property owners. Open space parks are undeveloped City-owned lands consisting of canyons, mesas and other natural features, and provide passive recreational trails for hiking, biking and horseback riding.

1.6.1 **Resource-Based Parks:** Resource based parks are intended to preserve and make available to the public areas of outstanding scenic, natural, or cultural interest. They are meant to supplement the neighborhood and community parks, and they serve the entire City and its visitors rather than any one community. However, they can also function to fulfill local neighborhood and Community Park needs of surrounding residents.

1.6.2 **Population-Based Parks:** Population-based parks are divided into two categories: Community Parks and Neighborhood Parks.

Community Parks: Community Parks typically serve 18,000 to 25,000 residents within approximately a 1-1/2 mile radius. Ideally they should have at least 13 useable acres when adjacent to a school, or 20 useable acres when not adjacent to a school ("useable acres" is defined as being two percent or less in grade). They should provide a wide range of facilities that supplement those of the neighborhood parks and which are determined by the needs and preferences of the community. Recreation centers, athletic fields, multipurpose courts, picnic facilities, play areas, parking areas, and comfort stations, landscaping and turf areas are standard amenities. When possible and desirable, swimming pools and tennis courts may be provided.

Neighborhood Parks: Neighborhood Parks serve a resident population of 3,500 to 5,000 persons within approximately a one half mile radius. Ideally, they should have a minimum useable area of five acres when located adjacent to a school or ten useable acres when not adjacent to a school. The design and type of facilities should be determined by the population and use characteristics of the neighborhood. Play areas, multi-purpose fields, comfort stations, multi-purpose courts, picnic facilities, landscaping and turf areas are typical amenities in neighborhood parks.

1.6.3 **Special Parks:** Special Parks are smaller than community or neighborhood parks (two acres or smaller) and contain passive recreation activities. These parks are sometimes called 'Pocket Parks', Renaissance Parks or 'Mini-Parks', and are often built by a Developer as a condition of a Land Development Permit and then turned over to the City to maintain. Walkways, trails, benches, shade structures and small play areas are typical amenities of these parks.

1.6.4 **Joint Use Parks:** Joint use parks are found adjacent to a population-based park and a school, or may be found adjacent to a school only. The costs of land, development and maintenance are shared equally by the City and the school district. Joint use parks are designed and constructed to the standards of the Consultant's Guide when the City will be responsible for long-term maintenance. A Joint Use Agreement between the City and the school district will be processed by the City.

1.6.5 **Maintenance Assessment District (MAD) Parks:** Maintenance Assessment District (MAD) parks are special parks that are maintained through an assessment of nearby property owners that is levied annually. Maintenance assessment districts maintain a variety of landscaping features, including certain parks and streetscapes. In cases where a maintenance assessment district maintains a park, typically the additional park is above the City's standard identified in the General Plan. Most maintenance assessment districts also maintain streetscapes, which typically include enhanced improvements along a public right of way, including street trees, greenbelt landscaping, center median landscaping, planted slopes, decorative benches and trash receptacles, decorative paving, enhanced street lighting and trails that are typically adjacent to public rights-of-way.

1.6.6 **Open Space Parks:** Open space parks are land which is owned by the City consisting of canyons, mesas and other natural landforms. Open space parks are intended to preserve and protect native plants and animals while providing public access and enjoyment by the use of hiking, biking and equestrian trails. Open space parks generally have minimal development and are intended to remain in their natural state.

2. PARK DESIGN STANDARDS

2.1 GENERAL STANDARDS

The following design standards address functional and aesthetic issues for park and open space design, and are to be referenced and utilized during the formulation of General Development Plans and final Construction Plans. All parks and open space shall meet the following guidelines and regulations (the stricter rule applies):

- Americans with Disabilities Act (ADA)
- Americans with Disabilities Act Accessibility Guidelines (ADAAG)
- Title 24 of the California Building Code (CBC)
- American Society for Testing and Materials (ASTM)
- Consumer Products Safety Commission (CPSC)
- Standard Specifications for Public Works Construction (Greenbook), including the City of San Diego "Whitebook" supplement
- San Diego Municipal Code
- City of San Diego Standard Drawings (SDSD)
- Uniform Building Code (UBC)
- City of San Diego Rules and Regulations for Recycled Water Use

The Design Consultant shall verify with the City Project Manager the project program, the specific size and functional requirements for the programmed facilities and the project budget prior to beginning the design process.

The Consultant has the sole responsibility to design a project in compliance with current and adopted ADA/ADAAG (Federal) and CBC (State) access law requirements. These guidelines are for information only and do not relieve the Consultant of liability in any way. Failure to design in conformity by law shall be remedied at the Consultant's own expense. Please note that the more stringent requirements of the ADA/ADAAG or CBC shall apply. It is the Consultant's responsibility to implement the stricter standard to the project. The City will not be responsible for any errors or omissions in the evaluation and plan review of the design.

2.2 SITE PLANNING

Park design and site planning shall include analysis and integration of on-site and off-site features such as bicycle and pedestrian trails, open space areas, topography, views, existing vegetation and joint-use needs of adjacent schools. Community Plans, Master or Precise Plans, General Development Plans and other City planning documents shall be referenced when analyzing and evaluating the project during site planning.

2.3 GRADING AND DRAINAGE

2.3.1 **General:** All park projects shall have positive drainage and provide the necessary components for drainage. Drainage is to be directed away from buildings, electrical enclosures, backstops and irrigation controllers. The following gradients shall be used in preparing grading and drainage plans.

Use:	**Grade:**
Walkways and Pedestrian Paving: Pedestrian walkways and monolithic surfaces of concrete, asphalt or unit pavers	1.5% minimum, 4.5% maximum. 1.5% maximum cross slope, no exceptions. Paving outside of street rights-of-way shall meet current Title 24 and ADA accessibility guidelines.
Basketball and Volleyball Courts: Multi-purpose paved courts	Drain end-to-end at 1%.
Tennis Courts:	Drain side-to-side or end-to-end at 1%. Never allow high point at net.
Multi-purpose Fields:	1.5% minimum, 2% maximum.
Softball and Baseball Fields:	1.5% for skinned and turf infields. 1.5% for turf outfields. Provide positive drainage away from home plate in all cases.
Parking Areas: Asphalt	1% minimum, 4% maximum with a 4.5% maximum cross slope. 1.5% maximum slope in any direction where accessible parking is required, no exceptions.
Turf Areas: Passive recreation	2% minimum, 20% (5:1) maximum.
Shrub and Groundcover Areas:	2% minimum, 50% (2:1) maximum.
Mulch Areas:	2% minimum, 20% (5:1) maximum.
Unpaved Trails:	Developed parks: 1.5% minimum, 4.5% maximum. 1.5% maximum cross slope, no exceptions. Open space parks: see Trail Policies and Standards, Appendix K

2.3.2 **Drainage Systems:** Drainage systems shall be designed and sized per flow requirements and engineered accordingly. Drainage systems shall conform to the City's Grading Development Regulations (Municipal Code § 142.0101) and Drainage Regulations (Municipal Code § 142.0201).

2.3.3 **Storm Water Run-off and Best Management Practices:** All park projects shall be designed to meet requirements of the City's Municipal Code and the Storm Water Standards Section of the Land Development Manual. Bio-swales, permeable paving and other natural means of filtration of storm water run-off are preferred to mechanical means; the use of stormceptors and similar technologies is discouraged.

2.3.4 **Finished Grade:** Finish grade for turf areas shall be one inch below walks, mow curbs or other paving. Finish grade for shrub, groundcover or mulch areas shall be two inches below walks, mow curbs or other paving.

2.3.5 **Security:** Grading and planting shall be such that a police officer seated in a vehicle may observe the entire park while driving through or around it. Avoid mounds or berms that provide hiding places. For additional information, see Appendix F, "Crime Prevention through Environmental Design."

2.4 PAVING, WALKWAYS AND MOW CURBS

2.4.1 **Paving and Walkway Designs:** Walkways are provided in all parks for functional and aesthetic purposes. Functionally, walkways should provide connections to different parts of the park and lead to special landmarks. Walkways that provide a loop system are preferred. Primary walkways in the park shall be concrete paving without color. At park perimeter(s) and parking lots, walkways should be located to provide a logical, convenient, and aesthetic means of accessing the park. Walkways shall be accessible to all users. Aesthetically, walkways should be designed to allow the user to enjoy on and off-site views, and the different amenities of the park.

2.4.2 **Walkway Locations:** Where possible provide walkways to separate turf areas from shrub and groundcover areas to reduce edging costs.

2.4.3 **Walkway Widths**

(1) Primary pedestrian/maintenance access walkways & security lighting: nine feet wide minimum.

(2) Walkways adjacent to ball field lights: twelve feet wide minimum.

(3) Walkways adjacent to parking stalls without wheel stops: nine feet wide minimum.

(4) Secondary pedestrian walkways without maintenance access or security lighting: six feet wide minimum.

2.4.4 Walkway Construction

(1) Walkway construction and reinforcement shall be based on the geotechnical report prepared specifically for the project. Geotechnical testing shall be provided during the design phase and shall be included in the bid documents. When no geotechnical report is available, walkways shall be constructed in accordance with the San Diego Standard Drawings and Greenbook specifications.

(2) Walkways that are required to support maintenance vehicles shall be clearly identified on the plans and designed to support maintenance vehicles. The minimum thickness shall be six inches for these walkways. Walkways adjacent to ball field lights and site security lights shall be designed to meet this criterion.

(3) Construction joints shall be per San Diego Standard Drawings.

2.4.5 **Unpaved Walkways:** Unpaved walkways may be proposed as a secondary component of a park's circulation system. These walkways shall be stabilized decomposed granite, pre-mixed by the plant at the rate recommended by the manufacturer, prior to delivery. A weed barrier is recommended below all decomposed granite paving. The preferred walkway edging is concrete, non-corrosive metal or recycled plastic lumber (Trex or equal). Edging adjacent to turf areas shall be concrete. See Appendix K for trail guidelines for Open Space parks.

2.4.6 **Mow Curbs:** Concrete mow curbs shall be provided to separate all turf areas from shrub, groundcover or mulch areas, to contain decomposed granite paving, under fencing adjacent to turf or groundcover that requires edging or mowing, and as an integral component of any wall (both at the top and bottom) where turf is proposed or exists. Mow curb width shall be eight inches minimum, 16 inches minimum beneath fences.

2.5 TRAILS

Trails provide for the use of alternative modes of transportation, as well as recreational activities. The various trail components within the City of San Diego include pedestrian, bicycling and equestrian trails. Trails shall be designed in compliance with the Park and Recreation Department's Trail Policies and Standards contained in Appendix K.

2.6 FENCING AND WALLS

2.6.1 **General:** Parks shall be designed functionally and visually as open as possible with as little fencing as possible. Fencing shall only be provided for multipurpose fields, joint use areas or where there is a safety issue that cannot be reasonably addressed by some other means. Fencing may be used where a tot lot is in close proximity to streets, parking lots or other high volume vehicular use areas that pose a safety concern. For security reasons, solid fencing shall not be used.

2.6.2 **Ornamental Fencing:** Ornamental fencing shall be used to maintain views or to be consistent with a project's design theme. All components shall be tubular steel or heavy duty aluminum. Tubular steel components shall be hot dip galvanized after fabrication (free of burrs and sharp edges). Steel posts and rails shall be minimum 14-gauge, and steel pickets shall be minimum 16-gauge. Fence color shall be a powder coated paint applied electrostatically.

2.6.3 **Chain-Link Fencing:** Chain link fencing may vary in height and detailing as per the specific site use(s) and requirements. If a fence exceeds eight feet in height a mid-rail will be required. Chain link fabric shall be located on the side adjacent to play or use areas.

2.6.4 **Gates:** Pedestrian gates shall be a minimum of four feet wide. Gates for maintenance vehicles shall be a minimum of twelve feet wide; use double swing gates.

2.6.5 **Walls (Retaining and Free-standing)**

(1) Walls shall be designed and located to discourage skateboarding and graffiti vandalism. Walls designed to avoid the need for skate stoppers are preferred to straight walls with skate stoppers.

(2) All concrete masonry walls shall be finished with a wall cap made of precast concrete units that are sized for the block, or shall have a custom cap designed for the wall; mortar caps are not acceptable.

(3) Caps for walls less than 36 inches in height and adjacent to walkways or turf areas shall have radiused or chamfered edges for safety.

(4) Retaining walls shall be installed with wall drains per San Diego Standard Drawings.

(5) Guard rails or fencing shall be provided at the top of walls when walls are over 30 inches in height with turf or walkways adjacent to the top.

(6) Walls and caps shall have anti-graffiti coating applied.

(7) Walls adjacent to turf shall have a mow curb per Section 2.4, Paving, Walkways and Mow Curbs.

2.7 PARKING AREAS

Parking areas shall meet the City's Parking Regulations (Municipal Code § 142.0500), California Building Code Title 24, Americans with Disabilities Act, San Diego Standard Drawings, and the parking ratios listed below. Non-programmed parkland includes passive recreation areas and picnic areas that are not scheduled for regular activities. Unusable park land such as steep slopes or natural areas should not be used in calculating parking space requirements. See 2.17.1 for planting requirements in parking areas.

2.7.1 Parking Ratio for Neighborhood Parks

(1) Provide five (5) parking spaces per acre of non-programmed parkland.

(2) Multi-Purpose Fields: When a neighborhood park has softball fields, provide an additional thirty (30) parking spaces per backstop.

(3) Parking may be provided by on-site parking facilities or on adjacent streets. If parking is provided on adjacent streets, only those spaces immediately adjacent to the park may be included; parking spaces located across the street or on non-adjacent streets will not be included.

2.7.2 Parking Ratio for Community Parks

(1) Provide five parking spaces per acre of non-programmed parkland.

(2) Recreation Centers: One (1) parking space per 200 square feet of building.

(2) Swimming Pool Facility: One (1) parking space per 175 square feet of pool surface area, in addition to the parking spaces required for the recreation center.

(3) Multi-Purpose Fields: Thirty (30) parking spaces per backstop, in addition to the parking spaces required for the recreation center or swimming pool facility.

(4) Tennis Courts: Twelve (12) parking spaces per six courts, in addition to the parking spaces required for the recreation center. If less than six courts are provided, no additional parking is required.

2.7.3 **Parking Area Paving:** Geotechnical testing shall be conducted to provide a paving section design for the parking lot and all vehicular access paths. Parking lot paving shall be constructed with asphaltic concrete (AC) pavement on cement treated base (CTB). Provide a pavement section on the construction plans based on R-values and Schedule 'J' pavement recommendations of the San Diego Standard Drawings, Cul-de-sac Criteria and CBR's for parking lots. Specify AR 8000 oil.

2.7.4 **Dimensions:** Dimensions for parking spaces and drive aisles shall meet or exceed the Land Development Code, Parking Regulations, Municipal Code §142.0500.

2.7.5 **Striping:** The paint utilized for striping and mark-outs shall be based on the Greenbook specifications.

2.7.6 **Parking Areas Adjacent to Turf:** To compensate for vehicular over-hang adjacent to turf areas, provide a minimum four foot wide concrete strip to allow operation of mowers when vehicles are parked. Where a walkway is required, see Section 2.4, Paving Walkways and Mow Curbs.

2.7.7 **Maintenance/Access Strip:** Where parking spaces are adjacent to landscaped areas, provide a twelve inch wide concrete strip of paving for user and maintenance access.

2.8 TRASH ENCLOSURES

Trash enclosures shall be constructed with concrete masonry block. Trash enclosures shall be located within parking lot areas where feasible. Trash enclosures shall be sized to house a minimum of two dumpsters; one for trash and one for recycling. A heavy vehicle load paving section for the drive lane and the concrete apron shall be provided at the head of the enclosure. Minimum size of the concrete apron shall be sufficient to allow refuse vehicle access to the trash receptacles. Specific dimensions, location and design shall be reviewed and approved by the Park and Recreation Department. The walls of the trash enclosure shall be treated with anti-graffiti coating inside and out. The enclosures shall have solid steel doors or chain link doors with screening slats with locking ability.

2.9 SITE FURNITURE

2.9.1 **General:** All parks shall have picnic tables, benches, drinking fountains, barbecues, bicycle racks, trash receptacles and other site furnishings as necessary. Types of site furniture selected shall be based on the type of park, design character, durability and maintenance. Precast concrete furniture with anti-graffiti coating is preferred for durability. Site furnishings shall complement each other in color, materials and form. Site furniture shall be permanently secured to the paving per the manufacturer's recommendations. Site furniture shall be selected from the Approved Manufacturers and Products List in Appendix E.

2.9.2 **Locations:** Locate site furniture outside of turf areas whenever possible. Site furniture in turf areas shall be placed on a concrete pad with a minimum of eight inches of clearance around to accommodate mowers. Site furniture in turf areas shall be spaced a minimum of twelve feet from other site furniture, fencing, walls, lights, trees and other vertical obstructions to accommodate City mowers. Site furniture shall be located to avoid conflicts with irrigation systems and other park improvements.

2.9.3 **Picnic Tables:** Picnic tables shall be placed on concrete pads with a 1.5% maximum slope in any direction. Concrete pads shall extend four feet beyond the table/bench dimensions on all sides. The orientation of picnic tables adjacent to walkways shall be perpendicular to the path of travel to discourage skateboard activity. One piece tables with benches are preferred. Picnic table configurations shall meet current accessibility standards for quantity, location and design.

2.9.4 **Park Benches:** Park benches shall be placed on concrete pads, and designed and located to discourage skateboard activity. When located in turf areas, the concrete pads shall provide a minimum eight inches of clearance around the perimeter to accommodate mowers. Bench configurations shall meet current accessibility standards for quantity, location and bench design.

2.9.5 **Drinking Fountains:** Each park shall have at least one drinking fountain. Where softball backstops are included, provide one drinking fountain for each backstop or group of backstops. Where recreation centers or comfort stations are included, provide a wall mounted drinking fountain on the exterior of the building or a pedestal style drinking fountain in the immediate vicinity. When a drinking fountain is building mounted, all plumbing shall be concealed within the walls of the building or within the plumbing chase; plumbing exposed to the public is not acceptable. All drinking fountains shall comply with current accessibility standards.

2.9.6 **Barbecues and Hot Coal Receptacles:** Barbecues and hot coal receptacles shall be located outside of circulation routes. Hot coal receptacles shall be visible from the barbeque area(s). Barbeques and hot coal receptacles shall be located on a non-combustible surface such as concrete paving, stabilized decomposed granite or turf; do not locate them in shrub/groundcover areas or mulch areas. If located in turf areas, provide a concrete pad with a minimum of eight inches of clearance around the perimeter to accommodate mowers.

2.9.7 **Bicycle Racks:** Bicycle racks shall be located on a paved area outside major circulation routes.

2.9.8 **Trash Receptacles:** Trash receptacles shall be square and provided with a locking side opening to facilitate servicing. All trash receptacles shall have a protective 'hood' cover. Trash receptacles shall be located in paved areas or shall have their own concrete pad. Provide a minimum of eight inches of clearance around the trash receptacle when in or adjacent to turf areas to accommodate mowers.

2.10 SIGNS

All parks shall have at least one permanently installed park identification sign. See Appendix A, Park and Recreation Board Policy No.1302 for the required sign elements and examples of signs. The sign shall also be consistent with the City's corporate image policy defined in the Corporate Identity Manual. The City's seal and the Park and Recreation Department logo shall be included in the design. The sign shall harmonize with the park's theme or natural character. Signs are typically one sided and parallel to the most prominent public street, or angled if located at the intersection of two streets. Light fixtures shall be vandal resistant.

2.11 PLAYGROUNDS AND EQUIPMENT (TOT LOTS)

2.11.1 General

(1) Playgrounds shall be designed to offer the greatest "play value" possible within the budgetary constraints and physical restrictions of the site. The play experience should challenge the users by addressing their physical, social and mental development while providing entertainment. The play environment shall be safe, durable and vandal resistant, and require minimal maintenance. Playgrounds and equipment shall meet the current requirements of the following:

- Americans with Disabilities Act (ADA)
- Consumer Product Safety Commission (CPSC) Handbook for Public Playground Safety
- American Society for Testing and Materials (ASTM):
  - Standard Specification for Impact Attenuation of Surfacing Materials within the Use Zone of Playground Equipment (ASTM F1292)
  - Standard Consumer Safety Performance Specification for Playground Equipment for Public Use (ASTM F1487)
  - Standard Specification for Determination of Accessibility of Surface Systems Under and Around Playground Equipment (ASTM F1951)
  - Standard Guide for Fences/Barriers for Public, Commercial, and Multi-Family Residential Use Outdoor Play Areas (ASTM F2049)
  - Standard Specification for Engineered Wood Fiber for Use as a Playground Safety Surface Under and Around Playground Equipment (ASTM F2075)
  - Standard Guide for Specification, Purchase, Installation and Maintenance of Poured-In-Place Playground Surfacing (ASTM F2479)

(2) Age Separation: Playground areas for “pre-school” children (ages two to five years old) shall be separated from playground areas for “school-age” children (ages five to twelve years old).

(3) Playground Hazards: Barbecues, hot coal receptacles and plant materials with thorns or stickers, or that attract bees, or other potential hazards shall not be located adjacent to playgrounds. Trees are not allowed to overhang safety zones of play equipment.

(4) Playground Maintenance: Playgrounds with sand surfacing shall not be located adjacent to gymnasiums or recreation centers to prevent tracking of sand indoors. Drinking fountains shall not be located immediately adjacent to playgrounds with sand surfacing, but should be in close proximity.

(5) Seating: Provide seating close enough to playgrounds for adults to supervise children. Seating shall be designed to meet ADA requirements, and shall be designed or located to discourage skateboard damage. Do not locate benches within the playground unless they are an integral component of the play structure.

(6) Substitutions: At the time of product submittals, any substitutions of play equipment specified on construction plans must fit the designed play area and be approved by the Park and Recreation Department. Shop drawings or catalog cuts and a revised layout plan showing the substituted equipment and safety zones are required in order to determine acceptability of the substitution(s).

(7) Equipment Installation: All play equipment shall be installed in accordance with the manufacturer’s specifications. The construction documents shall specify the play equipment be installed as late in the construction process as possible.

(8) Equipment Footings: With the exception of spring toys, the top of all play equipment footings located in loose fill material shall have a smooth finish, and be a minimum of twelve inches below finish grade of surfacing. Spring toys shall have footing edges chamfered at 45 degrees or rounded with a two inch minimum radius. Exposed bolts shall be cut off flush at the nut and spot welded, and shall be three to six inches below finish grade.

(9) Steel or Aluminum Play Equipment: Metal play equipment shall be colored by electrostatically applied powder coating or hot dipped galvanized with fused vinyl coating, minimum thickness of five mils.

(10) Product Availability: Limit products to those readily available within the United States so replacement parts are more readily available.

2.11.2 Disapproved Play Equipment: The following equipment is not allowed by the Park and Recreation Department.

- Plastic decks
- Decks with center access, unless rails are placed 90 degrees to main access or circulation patterns
- Perforations in excess of 3/16 inch in decks over 30 inches in height
- Decks which are secured with self-tapping screws
- Enclosed tunnel-slides or level tunnels, unless made of a mesh material
- Bubble panels, Lexan or Plexiglas 'windows'
- Sectional slides
- Wood components
- Metal slides
- Dark colored plastic slides in any orientation (tan, yellow or light gray only)
- Movable digging shovel toys that do not have a safety stop
- See-saws with fulcrum points (springs are acceptable)
- Pinch-type coil spring base animals
- Swings with heavy animal figures
- Half-bucket swing seats with chains to secure occupants
- Vinyl-clad cargo nets, except with non-slip clad, rigid horizontal bars
- Vinyl-clad swing chains
- Rigid swing seats
- Non-reinforced swing seats (must be slash resistant)
- Cable components

Recycled plastic structures are not prohibited, but should be limited to low-volume playgrounds, unless reinforced with metal bracing. See Appendix E for a listing of approved manufacturers and materials.

2.11.3 Playground Drainage and Construction

(1) Subgrade: The subgrade for loose fill resilient material shall be sloped to a subsurface drainage system at 1.5% minimum. The concrete base for poured-in-place rubber surfacing shall slope to a subsurface drainage system at 1% minimum. The subgrade for poured-in-place rubber surfacing shall be compacted to 90% minimum.

(2) Subsurface Drainage Systems: A subsurface drainage system shall be provided for all playgrounds. The drainage system shall be designed for positive drainage to the site storm drainage system. The playground drainage system shall connect to the site drainage system at a catch basin when possible. If connection at a catch basin is not possible, a clean-out shall be provided at the connection directed toward the play area. Leach lines or sumps may be considered if a site storm drainage system is not available; leach lines or sumps must be approved by the Park and Recreation Department. If sumps are used, locate them outside the playground whenever possible.

(3) Playground Containment: New playgrounds shall be contained by a minimum four foot wide concrete walkway with a deepened footing at the edge to retain loose fill material; the deepened footing may be omitted where poured-in-place rubberized surfacing is adjacent to the walkway. The walkway shall maintain a continuous elevation around the perimeter of the playground. The walkway shall slope 1.5% away from the playground. Sand shall be a maximum four inches below the walkway. Engineered wood fiber may be flush, or up to four inches below the walkway after settlement. Site grading shall direct run-off away from the playground. See Standard Park Details, Appendix H.

2.11.4 Playground Surfacing Materials: Acceptable surfacing materials include sand, engineered wood fiber, or poured-in-place rubberized surfacing. If both sand and engineered wood fiber products are used in the same play area they shall be separated from each other by a minimum of ten feet of paving or poured-in-place rubberized surfacing. See Standard Park Details, Appendix H.

(1) Sand: Sand surfacing shall be a minimum of twelve inches deep and a maximum of four inches down from the top of the containment walkway. The depth of sand shall be sufficient to attenuate falls per ASTM F1292. Sand shall be imported, double-washed, manufactured silica sand #20, #30 or “Pro Tour” sand as provided by Carmeuse Industrial Sands, Inc. (949-728-0171) or approved equal. Sand shall be free of deleterious organic material, loam, clay and debris, with a “mean effective size” between 0.30 millimeters and 0.65 millimeters and a “mean uniformity coefficient” between 1.00 and 2.50. The Contractor shall submit certification of the above requirement to the Resident Engineer at the time of product submittals. Sand shall only be used with a filter fabric and a drainage system.

(2) Re-use of Existing Sand: Existing sand may be re-used in a playground when it can be demonstrated the sand meets the requirements listed above for Sand. Existing sand may need to be washed and sieved to meet the specifications noted above.

(3) Engineered Wood Fiber: The Park and Recreation Department does not accept engineered wood fiber as an accessible surface. Engineered wood fiber may be used in lieu of sand; however, accessibility per ADA and Title 24 requirements must be achieved using poured-in-place rubberized surfacing. The engineered wood fiber surfacing shall be a minimum of 12 inches deep and a maximum of four inches down from the top of the containment walkway or poured-in-place rubberized surfacing. The depth of engineered wood fiber shall be sufficient to attenuate falls per ASTM F1292. Engineered wood fiber shall be an energy absorbing protective surfacing manufactured for playground installations in compliance with ASTM F2075. Engineered wood fiber shall only be used with a filter fabric and a drainage system.

(4) Poured-in-Place Rubberized Surfacing: Poured-in-place rubberized surfacing shall meet the requirements of CPSC and ASTM for play areas. All rubberized surfacing shall be installed on a concrete sub-base. Only aliphatic polyurethane binder shall be used; aromatic polyurethane binder is not acceptable. The color wear layer shall be ½ inch to 5/8 inch thick, and may be EPDM (ethylene propylene diene monomer) or TPV (thermoplastic vulcanizate). The buffing layer (cushion layer) shall be of a thickness sufficient to attenuate falls per ASTM F1292, and may be SBR (styrene-butadiene rubber) or approved equal. A single color or color blend is preferred versus patterns of varying colors with seams between.

2.11.5 Modular Play Equipment

(1) All decks shall be punched steel; expanded metal mesh is not acceptable.

(2) Decks and steps over 30 inches in height shall have 3/16 inch maximum diameter holes to prevent fingers protruding up from below being stepped on, and to minimize potential for hood drawstrings being caught in larger deck openings at the tops of slides.

(3) Decks, steps and transfer stations less than 30 inches in height may have larger holes to aid grasping and transfer from a wheelchair.

(4) All decks shall have a non-skid surface.

(5) The maximum deck height shall be six feet above resilient surface. Decks higher than six feet may be allowed if the unit is fully enclosed with no potential for falls from the greater height.

(6) For play structures designed for ages two to five years old, posts shall be 3-1/2 inch minimum diameter steel or aluminum, or recycled plastic with aluminum framing.

(7) For play structures designed for ages five to twelve years old, posts shall be five inch minimum diameter steel or aluminum (no plastic).

(8) Posts for play structures within one mile of the coast or bay shall be aluminum or recycled plastic with aluminum framing.

(9) Flat roofs or roofs that can be climbed on shall be set with a minimum clearance of seven feet above decks or adjacent step treads. Pitched roofs that cannot be climbed on shall be set with a minimum clearance of 6'-8".

2.11.6 Swings

(1) Swings shall be free-standing with a minimum of four posts for stability; do not attach swings to modular play equipment.

(2) All swings shall have five inch diameter powder-coated steel or aluminum posts, or 3-1/2 inch diameter galvanized steel posts. Posts within one mile of the coast or bay shall be aluminum or recycled plastic with aluminum framing.

(3) When space permits, provide separate swings for ages two to five years old (bucket seats) and for ages five to twelve years old (belt seats). Age ranges may be combined on the same support structure but may not be combined in the same bay.

(4) No more than two swings shall be hung in each bay of the support structure.

(5) Swing chains shall be 4.0-gauge galvanized steel; no vinyl coating is allowed on swing chains.

(6) Swiveling swing attachments that minimize chains wrapping around the top bar are preferred.

(7) Belt seats shall be slash proof. Hard seats are not acceptable.

(8) Fully enclosed bucket seats shall be molded rubber, reinforced with steel. Half bucket seats with chain restraints are not acceptable.

(9) Provide a safety zone for the swing set equal to two times the height of the top rail in front and in back of the centerline of the swing, and six feet clear between the support posts and other structures. Where space is limited, the safety zones for bucket seats may be sized per ASTM and CPSC standards.

2.11.7 Climbing Equipment

(1) Rungs or climbing bars shall be cylindrical, smooth and sized per CPSC and ASTM guidelines.

(2) Light colors (yellow, tan or light gray) shall be used for plastic climbers, even in coastal areas.

(3) Climbing wall chains may be coated with a non-slip heavy duty coating.

(4) Climbing boulders may be freestanding or attached to modular play equipment. The maximum height of climbing boulders shall be six feet above the resilient surface.

2.11.8 Slides

(1) Free-standing and attached slides shall be single-piece units with plastic beds. Sectional slides and metal slides are not acceptable.

(2) Light colors (yellow, tan or light gray) shall be used for slide beds, even in coastal areas.

(3) Stairways and ladders shall have continuous handrails on both sides and be placed at a height which will allow the child to stand erect over each step.

(4) The preferred orientation for slides is facing north to northeast.

(5) All slide exits shall be located in uncongested areas with a clear safety zone per ASTM and CPSC standards.

2.11.9 Spring Toys

(1) Spring toy bodies shall be constructed of cast aluminum or heavy duty plastic.

(2) Spring toys shall be mounted on “C” spring bases or ‘non-pinching’ coil springs only.

(3) Minimize the placement of spring toys within poured-in-place rubberized surfacing areas; the constant movement deteriorates the surfacing.

2.11.10 Signage

(1) A permanently mounted sign indicating age-appropriateness for each play area shall be set at the entrance to each play area. Verbiage shall notify users and parents/guardians that supervision is required for ages two to five years old, and recommended for ages five to twelve years old. Signage may be incorporated into each play structure as a panel.

(2) Stickers stating compliance with fall surfacing requirements are required upon completion of installation.

(3) A separate sign indicating park rules shall be posted in the immediate vicinity of the playground (standard six-pack sign).

(4) A separate "No Smoking" sign shall be posted in the immediate vicinity of the playground.

2.11.11 Safety Zones

(1) All safety zones set by the most current CPSC and ASTM guidelines takes precedence over safety zones noted in this Consultant's Guide.

(2) Do not plant trees that will overhang the safety zones of play equipment at maturity.

2.11.12 Inspections

(1) Audit: At the completion of installation but prior to opening the playground to the public, the playground shall pass audit by a National Playground Safety Institute Certified Playground Safety Inspector. See Section 3.2.6, Layout and Construction Plans, for additional information.

(2) Head Impact Criteria (HIC) Test: At the completion of installation but prior to opening the playground to the public, poured-in-place rubberized playground surfacing shall be tested for impact attenuation in compliance with ASTM F1292. Testing shall be conducted by a technician certified by the manufacturer of the testing equipment used. Testing shall be done for each age group.

2.12 PREFABRICATED PICNIC SHELTERS

Prefabricated picnic shelters shall be all steel construction. The finish shall be an electrostatically applied powder coat. Roofs shall be standing metal seam or similar, with no exposed screws.

2.13 SPORTS COURTS

2.13.1 General: When possible and space permitting, basketball and volleyball courts shall be separate. When site constraints dictate, courts can be combined into multi-purpose courts. Paved multi-purpose courts can be plain concrete with a medium broom finish and painted striping, or can have a colored sports surfacing applied over the concrete, with painted striping. In all instances the surfacing and striping shall be wear resistant and slip resistant. See Standard Park Details in Appendix H for layout and striping.

2.13.2 Basketball Courts

(1) Basketball courts shall be a poured concrete surface 104 feet by 70 feet in dimension, with a playing area of 84 feet by 50 feet. Half-court configurations may be considered with approval from the Park and Recreation Department.

(2) Court construction and reinforcement shall be based on the geotechnical report. Rebar dowels and sleeves shall be provided at all cold joints; all sleeves shall be greased.

(3) The preferred court orientation is along a north-south axis.

(4) The minimum distance between courts when two or more courts are side by side or end to end is ten feet.

(5) Backboards shall be all steel fan shaped with an emulsion type undercoat. Extensions shall galvanized steel, six feet in length. Rims shall be double rimmed with nylon nets. Poles shall be galvanized steel.

2.13.3 Paved Volleyball Courts

(1) Paved volleyball courts shall be a poured concrete surface 50 feet by 80 feet in dimension, with a playing area of 30 feet by 60 feet.

(2) Court construction and reinforcement shall be based on the geotechnical report. Rebar dowels and sleeves shall be provided at all cold joints; all sleeves shall be greased.

(3) The preferred court orientation is along a north-south axis.

(4) When two courts are side by side, there shall be a minimum of ten feet between side lines. Courts placed end to end shall have a minimum distance of 15 feet between base lines.

(5) All volleyball posts shall be galvanized. The net posts shall be eight feet above the finish playing surface. The net shall have a stainless steel cable along the top and rope along the bottom. The posts and spacing shall accommodate a 32 foot wide by three foot tall net.

2.13.4 Sand Volleyball Courts

(1) Sand volleyball courts shall 50 feet by 90 feet with a playing area of 30 feet by 60 feet.

(2) The sand shall be contained by a concrete curb, eight inch minimum width, with a constant elevation around the perimeter of the court.

(3) The preferred court orientation is along a north-south axis.

(4) See Section 2.11, Playgrounds and Equipment (Tot Lots), for sand specifications for sand volleyball courts.

(5) A subsurface drainage system shall be provided that connects to the site drainage system. Leach lines or sumps may be considered if a storm drain is not available and if approved by the Park and Recreation Department.

(6) All volleyball posts shall be galvanized. The net post shall be eight feet above the finish playing surface. The net shall have a stainless steel cable along the top and rope along the bottom. The posts and spacing shall accommodate a 32 foot wide by three foot tall net.

2.13.5 Tennis Courts

(1) Tennis courts shall be a poured concrete surface 60 feet by 120 feet in dimension, with a playing area of 36 feet by 78 feet. Where multiple courts are provided side by side, the following layouts may be considered: When space allows, the courts shall be the full dimensions noted above with a fence between (see Standard Park Details, Appendix H). Where space is limited, the courts may be separated by twelve feet at the side lines without fencing extensions between the courts.

(2) Court construction and reinforcement shall be based on the geotechnical report. Score lines shall be provided per the geotechnical report to eliminate stress cracking in monolithic pours; score lines shall be saw cut. Rebar dowels and sleeves shall be provided at all cold joints; all sleeves shall be greased.

(3) Court surface shall be a non-skid surface. The courts shall be striped for both singles and doubles play. Lines shall be painted two inches wide; except for the baseline which shall be painted four inches wide (see Standard Park Details, Appendix H).

(4) The preferred orientation of the courts is along the long axis 22 degrees west of north.

(5) Fencing shall be twelve feet high with chain link fabric installed on the court side of the posts. Fence posts, chain link, rails and hardware shall be black 'thermally-fused poly-vinyl chloride'. Fine mesh wind screening shall be attached to the court side of the fence. Gates shall be located within the fence so as to not disrupt play on adjacent courts. San Diego Standard Drawings may not be used when wind screens are attached to the fencing; provide details and structural calculations when using wind screens.

2.14 MULTI-PURPOSE FIELDS (SOFTBALL & SOCCER TURF AREAS)

2.14.1 General: Multi-purpose fields shall be free of all rocks ½ inch diameter or larger to a depth of twelve inches. Topsoil for multi-purpose fields may be Class "C" per "Greenbook" specifications when it can be amended to meet the requirements listed in the Greenbook for Class "A" topsoil. When the existing topsoil cannot be amended to meet the requirements of Class "A" topsoil, provide a minimum twelve inch layer of Class "A" imported topsoil per "Whitebook" specifications.

2.14.2 Softball Fields

(1) Base length: 65 feet minimum

(2) Foul Line distance: 250 foot radius minimum from home plate

(3) Home Plate to Backstop distance: 20 feet

(4) See Standard Park Details, Appendix H, for field layout.

2.14.3 Field Orientation: The preferred orientation places the batter facing the pitcher in a northerly direction with a line from home plate to the pitcher's mound not deviating more than 20 degrees east or west of north. However, optimum utilization of the site may require deviation from the preferred orientation.

2.14.4 Field Drainage: The fields shall typically be crowned in the center with drainage to the sides. Certain sites and field overlay situations may make this drainage pattern unachievable. In such cases, other drainage patterns or drainage devices will be considered and approved by the Park and Recreation Department. In all cases there shall be positive drainage away from home plate. Drainage catch basins or manholes shall not be located within the field of play.

2.14.5 **Softball Field Infield Mix:** The softball field infield mix shall meet the following requirements:

Grain Size Distribution	Percent Passing	
Sieve Size	**Minimum**	**Maximum**
No. 4	100%	
No. 8	90%	100%
No. 16	85%	95%
No. 30	65%	85%
No. 50	35%	55%
No. 100	20%	35%
No. 200	10%	25%

(1) Clay Content shall be 10 to15 percent.

(2) Sand Equivalent shall be 15 to 25 percent, as per test method California Test 217 or ASTM D2419.

(3) The pH range shall be 6.0 to 8.5.

(4) Gold color is preferred. Red color is acceptable.

(5) The minimum thickness of the Infield Mix shall be four inches.

2.14.6 **Infield Dust Control:** Provide two quick coupler valves in the turf area just beyond the perimeter of the infield. These valves shall be set at finish grade. Additionally, provide a manually controlled system of high-speed rotors at the perimeter of the infield to wet the infield evenly and quickly. If the park is being designed for recycled water use, the quick coupling valves and high speed rotors shall be connected to a potable water supply with adequate backflow protection.

2.14.7 **Fencing and Backstop:** Refer to the Standard Park Details in Appendix H for softball backstop construction. Deviation from these details requires Park and Recreation Department approval.

2.14.8 **Maintenance Access to Softball Field Lighting:** Maintenance access to ball field lights shall be provided by concrete walkways designed for heavy equipment. See Section 2.4, Paving, Walkways and Mow Curbs.

2.14.9 **Electrical Requirements:** Verify need and location for an electrical outlet for the use of a pitching machine with the Park and Recreation Department. The outlet may be located in a lockable stainless steel box behind the backstop or backstop fence.

2.14.10 **Softball Bleachers:** Bleachers shall be hot dipped galvanized steel, three rows minimum or five rows typical and fifteen feet long. Bleachers with five rows require guardrails. Specify spot welding of seats and foot planks to the bleacher frame, free of burrs and sharp edges. Bleachers shall be placed a minimum of four feet from the fence line of the backstop. Provide accessible seating with bleacher seating.

2.14.11 **Soccer Fields:** The preferred size for soccer fields is 225 feet by 360 feet with a clear zone of nine feet on all sides. Multiple fields being placed adjacent to one another shall be placed side by side. Fields may be "off-set" to facilitate field layout, but may not be end to end. The preferred orientation is with the long axis north-south. The field size may vary depending on site constraints; confirm the actual size with the Park and Recreation Department. The playing surface shall not overlap onto the skinned infield of a softball field. The field area shall be free of drainage catch basins and manholes.

2.15 SITE AND SPORTS LIGHTING

2.15.1 General Design Requirements

(1) Lighting Systems Specifications: Lighting and electrical plans and specifications shall be prepared by a State of California licensed Electrical Engineer. All designs shall comply with the applicable City of San Diego requirements including, but not limited to, Traffic Signal and Street Lighting Requirements, Standard Specification for Public Works Construction, and Title 24 Standards for 'Outdoor Lighting Design' as applicable. Light fixture locations and plant locations shall be coordinated so that plants do not obscure the lights at maturity.

(2) Exterior Lighting Design: During the design phase of the project, the Consultant shall provide point to point drawings showing illumination levels of the playing surfaces, extending 150 feet beyond the playing surfaces in all directions. The point to point drawings will be used to verify the amount of spill lighting, or trespass light, outside the playing area.

(3) Interior Lighting Design: Interior sports lighting systems shall consider the use natural light to minimize electricity use during the day. The Consultant shall evaluate gymnasium sports lighting systems including use of pulse start metal halide and multi-ballast florescent fixtures.

(4) Interior Lighting Controls: During the design of all lighting systems, the Consultant shall consider the merits of using occupancy sensors and lighting automatic lighting control systems to switch lights. This includes but is not limited to automatic lighting controls, day lighting controls, and programmable lighting controllers to minimize energy consumption from lighting.

(5) Exterior Lighting Spill and Glare Requirements: All lighting systems shall use internal reflectors and exterior louvers to reduce light pollution.

(6) Conduit: Underground conduit improvements shall be in Schedule 40 PVC pipe, minimum size of one inch. Above ground conduit improvements shall be in galvanized rigid steel pipe. When adjacent to a sidewalk, conduit shall be installed parallel to the sidewalk with adequate clearance from irrigation lines and other utilities.

(7) Pull Boxes: Pull boxes for high voltage site and sports lighting shall be placed in the sidewalk or within concrete areas where possible. Pull boxes are required at each light standard when light standards are placed further than 50 feet apart. Pull boxes shall be concrete with a bolt-down cover.

(8) Light Pole Locations: All light poles shall be located in shrub beds and mulch areas whenever possible. When light poles are located in turf areas, they shall be adjacent to walkways with a concrete pad per San Diego Standard Drawings. If it is not feasible to locate light poles adjacent to walkways, light poles in turf areas shall have a concrete mow curb at the base per San Diego Standard Drawings.

(9) Light Fixtures: All light fixtures shall be per the Approved Manufacturers and Products List, Appendix E, and the Standards and Specifications Guidelines from Facilities Division, Appendix G.

(10) Light Poles and Irrigation Heads: Light poles and irrigation head layout shall be coordinated to allow for full irrigation coverage and to avoid spraying poles.

(11) Anchor Bolts: Anchor bolts for light poles shall not be exposed. Anchor bolts shall be covered with grout or a metal shroud provided by the manufacturer.

(12) Light Pole Bases: A midget ferrule fuse shall be provided in the base of each light pole.

(13) Electrical Enclosures: All outdoor lighting facilities shall be flush mounted and installed in lockable and vandal-proof enclosures.

(14) Future Lighting: The Lighting Consultant shall verify with the City's Project Manager the type of future lighting infrastructure to be provided for each project.

(15) Programmable Lighting Panels: All U.P.S. and E.P.S. System and Programmable Lighting Panels shall have the following included with the Systems: All software need to change times or zones; Exterior Controller for Lighting Systems and Telephone Line Installed and Hook-up to Modem Provided in each system.

2.15.2 Security Lighting

(1) Requirements: All community and neighborhood parks shall be designed with security lighting along walkways and in parking areas. Security lights are to be mounted on building walls where possible. The minimum amount of lighting along all walkways and in parking areas shall be 0.5 foot-candles (fc), with a uniformity rate of six.

(2) Lighting Type: The fixtures shall have a Classification of Type I or cut-off per the Illumination Engineering Society (IES) standards. The refractor shall be U.V. stabilized prismatic acrylic or polycarbonate; glass is not acceptable. The mast-arm type shall be the slip-on type. Each fixture shall be individually switched by means of a twist-lock photocell. Lighting circuits shall be energized by means of a time clock so each system has the capability of being switched off at a pre-determined time.

2.15.3 Multi-Purpose Field and Court Lighting

(1) Requirements: Lighting shall meet the current IES standards and the skill level of the highest play activity that is being provided. The design shall be prepared to use the least number of light fixtures and electrical energy required to provide the specified lighting intensities. Spill and glare shall be minimized. Photometric data and lighting density calculations must be provided at plan check phase.

(2) Lighting levels, in foot-candles (fc):

Activity	**Horizontal Illumination**	**Uniformity**
Soccer:		
Recreational	20 fc	4:1 or less
Amateur	30 fc	3:1 or less
Softball:		
Infield	30 fc	2.5:1 or less
Outfield	20 fc	3:1 or less
Baseball and Little League:		
Infield	50 fc	2:1 or less
Outfield	30 fc	2.5:1 or less
Tennis Courts:	30 fc	4:1 or less
Basketball and Volleyball:	30 fc	3:1 or less
Swimming Pool Decks:	1 fc	4:1 or less

(3) Baseball and Little League lighting requirements are sanctioned and tested by Little League Baseball. This type of lighting requires written approval from the Park and Recreation Director.

2.15.4 Tennis Court and Multi-Purpose Court Light Switches: Control of sports lighting shall be accomplished with an "on" button only, energized by a time clock, and time clock shall turn lights off after set time. Verify all court lighting requirements with the Park and Recreation Department. Each tennis court shall be lighted independently. Individual "On" buttons shall be located adjacent to each tennis court. The electrical power to tennis court lighting shall be independently metered by SDG&E.

2.15.5 Multi-Purpose Field Light Switches

(1) Multi-purpose field lights shall be activated by means of an on-off switch located in a separate lockable (padlock) vandal resistant enclosure. The "On" switch shall be energized by a time clock. The clock shall turn the lights "Off" at a predetermined time. Lighting for each softball and soccer fields shall be on separate systems. Relay switches (contactors) of more than three poles or any other exotic switching equipment shall not be used.

(2) When requested by the Park and Recreation Department, provide a proprietary control system capable of turning the sports lighting on and off from a remote location. The control system shall be compatible with the lighting and electrical equipment provided.

2.15.6 Multi-Purpose Field and Court Light Pole Standards: Lighting Poles shall be a maximum height of 70 feet. Field lighting poles shall be located outside the fenced play areas.

2.16 IRRIGATION

2.16.1 General Requirements

(1) Irrigation System Efficiency: The irrigation system for turf areas shall be designed to achieve a Distribution Uniformity (DU) of 70 percent, or 0.70. To achieve this goal, the irrigation system shall be audited by an independent Certified Landscape Irrigation Auditor, certified by the Irrigation Association. Deficiencies shall be corrected prior to the start of the Plant Establishment Period. **These requirements shall be included in the construction documents.**

(2) Irrigation Design: The irrigation system shall be designed utilizing water conservation standards and equipment. The irrigation design shall be based on accurate pressure information and produce an irrigation system which efficiently and uniformly applies water throughout the site. The irrigation design shall also have sufficient residual pressure and flow to accommodate site conditions, field changes and unforeseen future demands as well as anticipated future demands, if it is a phased project.

(3) Watering Schedule: For most parks there are two primary considerations: 1) To assure that the irrigation design will meet the time constraints of the park's required operation needs; and 2) The system must be able to apply the volume of water necessary to achieve the evapotranspiration rate (ETO) for the highest demand month within a 32 hour per week watering "window." For parks with active sports fields it is critical the irrigation design is adequate to irrigate the site within the irrigation window and the recreational schedule of the sports fields. The irrigation design must be able to irrigate the complete site within one 8 hour irrigation window. This cycle must be able to apply the volume of water needed in a peak summer condition following two consecutive days of no water. A typical condition at most sport field complexes requires that the fields not receive irrigation on Friday or Saturday nights in preparation for community use on the following morning, and therefore the irrigation design must apply three days of irrigation in a single night. To carry overtime for this condition is NOT effective.

(4) Residual Pressure: In developed areas the residual pressure shall be 15% and in undeveloped areas the residual pressure shall be 25% of the required operating pressure.

(5) Ball Field Irrigation: Irrigation circuits for ball fields shall be separated from other turf areas of the park.

(6) Slope Irrigation: Irrigation lines shall run horizontally (level and parallel to the slope contours) to minimize line drainage and pressure differentiation.

(7) All irrigation equipment shall be installed per San Diego Standard Drawings unless otherwise noted or detailed on the construction drawings. Deviation from the San Diego Standard Drawings must be approved by the Park and Recreation Department.

2.16.2 Recycled Water: The irrigation designer shall verify the need to design the irrigation system for recycled water use with the appropriate water district. All recycled irrigation systems shall be designed per the 'Rules and Regulations for Recycled Water Use and Distribution within the City of San Diego.'

(1) Cross Connection Test Station: Shall be a cast brass or bronze ball valve, 3/4 inch female thread, installed in a concrete valve box with a cast iron locking lid.

(2) Quick couplers and manually controlled high-speed rotor heads provided for softball field dust control identified in Section 2.14, Multi-Purpose Fields, shall be connected to a potable water supply with adequate backflow protection.

2.16.3 Irrigation Controllers

(1) Irrigation systems shall be controlled by an automatic electrical controller.

(2) Controller Locations: Controllers shall be installed at locations approved by the Park and Recreation Department. The preferred location is wall-mounted inside a Park and Recreation storage room of a comfort station, recreation center or other permanent park building. When a comfort station, recreation center or other park building is not present, the controller(s) shall be installed in a controller enclosure located in a shrub or mulch area; do not install irrigation controller enclosures in turf areas.

(3) Interior Mounted Controllers: When located inside a Park and Recreation storage room or other acceptable space, the irrigation controller(s) shall be mounted on a pre-assembled controller and backboard assembly.

(4) Exterior Mounted Controllers: When not located inside a permanent park building, irrigation controllers shall be installed in a vandal resistant, weather proof, stainless steel enclosure on a concrete pad.

(5) Rain Shut-off Device: Provide an automatic rain shut-off device in a vandal resistant enclosure for each controller or group of controllers. The rain shut-off device shall be located in an area subject to rainfall but out of the spray area for irrigation.

2.16.4 **Water Meter (Point of Connection):** Water Meter Size: The maximum water meter size is two inch. If the irrigation system requires more than a two inch meter, provide an additional water meter in a manifold or separate the irrigation system for two points of connection. Provide separate meters for irrigation and domestic (potable) uses. The preferred location for water meters is in a shrub or groundcover planting area rather than a turf area.

2.16.5 **Irrigation Booster Pump:** When available water pressure is not adequate to meet the needs of the irrigation system, an irrigation booster pump may be used. The irrigation booster pump shall be enclosed in a vandal resistant marine grade aluminum alloy enclosure on a concrete pad. All piping and wiring shall be concealed within the enclosure. Provide adequate clearance around the enclosure for maintenance.

2.16.6 **Backflow Prevention:** A reduced pressure principle backflow preventer is mandatory for irrigation systems using potable water per the Municipal Code. The installation shall include a stainless steel enclosure (free of burrs and sharp edges) on a concrete pad. See San Diego Standard Drawings for backflow preventer installation. Backflow preventer enclosure installation shall be per the manufacturer's details and specifications.

2.16.7 **Wye Strainer:** Provide a brass or bronze wye strainer immediately downstream of the backflow preventer. The wye strainer shall be line size, sufficient to meet the demand of the irrigation system. The screen shall be 300 series stainless steel with a #40 mesh. Install the wye strainer below grade in a concrete valve box with a locking cast iron cover. The wye strainer shall have an integral union or be installed with a separate PVC Schedule 80 union.

2.16.8 **Pressure Regulating Valve:** Provide a pressure regulating valve as required based on hydraulic calculations of the irrigation system. Specify the correct spring range (pressure range) for the pressure regulating valve. The pressure regulating valve shall be located below grade in a concrete valve box with a locking cast iron cover, immediately downstream of the backflow preventer and wye strainer. The pressure regulating valve shall have an integral union or be installed with a separate PVC Schedule 80 union.

2.16.9 **Master Control Valve and Flow Sensor Device:** Provide a 'normally open' master control valve immediately downstream of the backflow preventer, wye strainer and pressure regulating valve. The master control valve shall be wired independently to the master valve station of the irrigation controller. Provide a flow sensor located downstream of the master control valve, installed in a concrete valve box with a locking cast iron cover per manufacturer's specifications. All transitions from mainline depth to valve box depth shall be accomplished by the use of 45° couplings.

2.16.10 **Isolation Valves**

(1) Locations: Provide isolation valves along the mainline at appropriate locations to divide the irrigation system into manageable units, at stub outs for future systems, prior to crossing large expanses of pavement, prior to crossing vehicular drives, at each remote control valve or manifold, and for each quick coupler.

(2) Valve Manifolds: Isolation valves for remote control valve manifolds and quick couplers shall be bronze globe valves. Valves shall be the same size as the largest remote control valve on a manifold. Valves for quick couplers shall be one inch.

(3) Main Lines: Isolation valves for main lines three inch and smaller shall be bronze globe valves. Isolation valves for main lines four inch size and larger shall be cast iron or bronze gate valves. Isolation valves for main lines in a looped main line system design shall be cast iron or bronze gate valves.

2.16.11 **Remote Control Valves:** Remote control valves shall be of brass or bronze construction; plastic valves are not acceptable. The maximum remote control valve size is two inch with a maximum pressure loss of five PSI. Remote control valves shall be installed in manifolds with a maximum four remote control valves per manifold. Install no more than one remote control valve per valve box. In multi-purpose fields, locate remote control valves along fence lines outside the field of play. All other remote control valves shall be located in shrub or groundcover areas where possible.

2.16.12 **Manual Control Valves:** Manual control valves for use on manual irrigation systems and softball infield dust control systems shall be bronze globe valves.

2.16.13 **Quick Coupler Valves:** Quick couplers shall be one inch size and constructed of brass or bronze, with a locking rubber or vinyl cover. Quick couplers shall be installed with their own one-inch size isolation valve. Provide quick couplers at a maximum spacing of 150 feet on center along main line routes. Locate quick couplers with remote control valve manifolds wherever possible. Provide quick couplers for softball infield dust control as indicated in Section 2.14, Multi-Purpose Fields. The minimum main line size for quick couplers shall be 1-1/2 inch. Quick coupler valves shall be installed in shrub or groundcover areas whenever possible, except as noted in Section 2.14, Multi-Purpose Fields, or as directed by the Park and Recreation Department.

2.16.14 **Irrigation Boxes:** All irrigation boxes shall be concrete with a cast iron locking cover. The preferred location for irrigation boxes is in a shrub or groundcover area adjacent to a walkway. Irrigation boxes for remote control valves shall be set parallel to each other, and perpendicular to adjacent paving or concrete curb. The contractor shall paint the identification number (controller letter and valve number) of the valve box on the cover; control wire pull boxes shall be marked "PB"; larger isolation valves in valve boxes shall be marked "GV". The paint shall be white or yellow 100% acrylic epoxy waterproof paint.

2.16.15 **Irrigation Heads**

(1) Coverage: Provide 100 percent (head to head) coverage for all areas irrigated with an overhead irrigation system. In larger turf areas where head spacing is 30 feet or greater, provide an additional 10 percent of overlap to allow for wind. Triangular spacing is preferred, where feasible.

(2) Operating Pressure: The irrigation system shall be designed for the optimal operating pressure of the irrigation head(s) specified.

(3) Overspray: All irrigation heads shall be installed and adjusted to avoid overspray onto buildings, walkways, streets, play equipment, or other improvements.

(4) Anti-Drain Valves: All pop-up type irrigation heads shall have an internal anti-drain valve capable of holding back a minimum of twelve vertical feet of head pressure. All fixed riser type irrigation heads shall be equipped with an anti-drain valve located in the riser assembly per San Diego Standard Drawings. Additional in-line anti-drain valves may be required based on site conditions and irrigation system design.

(5) Pop-up Head Locations: Irrigation heads in "accessible areas" prone to vandalism or accidental breakage shall be pop-up heads. This includes irrigation heads directly adjacent to walkways, curbs, parking areas, turf or pedestrian accessible areas.

(6) Turf Heads: All sprinkler heads in turf areas shall be pop-up type with a minimum pop-up height of four inches.

(7) Shrub and Groundcover Heads: Pop-up heads shall have a six inch or twelve inch riser height depending on the adjacent shrubs or groundcover. Fixed riser heads shall be on twelve inch high risers, and provided only in areas approved by the Park and Recreation Department.

(8) Pop-up Stream Rotor Heads: All pop-up type stream rotor heads for permanent irrigation systems shall have stainless steel risers and a five year manufacturer's warrantee. Stream rotors used for temporary irrigation systems may have plastic risers with prior approval of the Park and Recreation Department.

(9) Tree Irrigation: Provide a separate bubbler system for trees, with two bubblers per tree. Bubblers shall be pressure compensating with a fixed flow rate; adjustable flow bubblers are not acceptable. One bubbler shall be a deep root bubbler per San Diego Standard Drawings and the other bubbler shall be on a two inch pop-up body. The pop-up bubbler shall be located on the uphill side of the root ball.

2.16.16 Trenching

(1) No Sharing of Trenches: No shared use of trenches will be allowed between various trades and for incompatible uses. Pipes shall not be installed directly over one another.

(2) Pipe Bedding: All main line and lateral line pipe shall be encased with SE 50 plaster or mortar sand.

(3) Warning Tape: Warning tapes for irrigation main lines and low voltage control wires shall be a minimum of three inches wide and shall run continuously for the entire length of all main line piping and wire. In a trench containing both main line and low voltage control wire, both trench marker tapes shall be installed side by side.

2.16.17 Piping

(1) Water Velocity: All systems shall be designed to operate at a water velocity not to exceed five feet per second (fps).

(2) Pressure Mainline Pipe:

1-1/2 inch diameter shall be Schedule 40 PVC pipe (1-1/2 inch minimum size) with Schedule 40 fittings.

Two inch diameter and larger shall be Class 315 PVC pipe with Schedule 80 fittings.

(3) Non-Pressure Lateral Pipe: Shall be Schedule 40 PVC pipe with Schedule 40 fittings. All end runs, regardless of head type, shall be 3/4 inch size minimum or one inch if the sprinkler head inlet is one inch.

(4) On-Grade Pipe: On-grade piping is only allowed with Park and Recreation Department approval. On-grade pipe shall be galvanized iron pipe (GIP) or UV stabilized PVC pipe with gauges as noted above.

2.16.18 Sleeving

(1) Sleeving: Sleeving is required for all irrigation pipe and electrical lines below paving. Sleeves shall extend a minimum of twelve inches beyond the paved surface above. A pull box shall be provided at each end of sleeves crossing streets or driveways.

(2) Irrigation Lines: All sleeves for irrigation lines shall be Schedule 40 PVC pipe sized two times the diameter of the pipe to be enclosed, two inch minimum size.

(3) Electrical Lines: All sleeves for electrical lines shall be Schedule 40 PVC pipe two times the diameter of the wire bundle to be enclosed, two inch minimum size.

(4) Pavement Marking: Where irrigation water lines cross under paving the letter ‘W’ shall be stamped or chiseled on the pavement or curb directly above the sleeve on both ends. Where electrical lines cross under paving the letter ‘E’ shall be stamped or chiseled on the pavement or curb directly above the sleeve on both ends.

2.16.19 Wiring

(1) Spare Control Wires: A minimum of two (2) spare control wires shall be run along each mainline branch to the furthest valve manifold. Bundle and tape four feet of additional wire and install in the last valve box on each mainline run. Loop the spare wires into one valve box for each manifold along that mainline run.

(2) Color Coding: All control wires shall be color coded per the City of San Diego "Whitebook" supplement to the Greenbook.

(3) Splices: No splices will be allowed on runs of less than 300 feet. All splices are to be made with an approved splice unit, soldered, and installed in a concrete pull box.

2.17 PLANTING

2.17.1 General Requirements

(1) Planting Design: Shall be appropriate for the site and climate conditions and shall enhance the park site and the park user's experience. See Appendix B, Council Policy No. 200-14, Park and Recreation Facility Landscape Design.

(2) Plant Spacing and Locations: All planting shall be located to permit the proper operation of irrigation systems and the effective use of mechanized maintenance equipment. Plant locations and spacing shall permit normal plant development without undue crowding or trimming. Shrubs, groundcover and vines shall be spaced a minimum of one half of their mature diameter from all walkways.

(3) Slope Revegetation: As a minimum, all existing and manufactured slopes greater than 4:1 and over five feet in vertical height shall be revegetated per the City-Wide Landscape Regulations (Municipal Code § 142.0411). All other slopes shall be revegetated in accordance with park aesthetics.

(4) Brush Management: All areas requiring brush management shall be designed per the City-Wide Landscape Regulations (Municipal Code § 142.0412).

(5) Parking Areas: All parking areas shall provide a minimum of five percent of the parking area as landscaping. Within the parking area, one 24-inch box tree shall be provided within 30 feet of each parking space. The required trees shall be located in a minimum of 40 square feet of landscape area. Parking areas adjacent to public rights-of-way shall provide a 30 inch high screen. Plants may be used to screen the parking area if the plants selected will provide a 30 inch high screen within two years. Curbs (six inch minimum

height) are required to protect all landscape areas within parking areas (Municipal Code § 142.0406).

(6) Trees: Trees planted in turf areas shall be spaced to permit the most effective use of mechanized maintenance equipment and operation of the irrigation system. Trees planted in turf areas shall have a minimum of twelve horizontal feet between trees and other vertical objects. For all trees installed in turf areas, provide a four foot diameter mulched area around the base of the tree; there shall be no mulch on crown of tree. Dense tree groves shall not be planted in turf areas.

(7) Shrubs/Vines: Ornamental shrub beds in parks and around park buildings may be provided with approval from the Park and Recreation Department. Shrubs and vines adjacent to building walls shall have a mature height that preserves visual access. Provide a two inch layer of mulch in all shrub areas.

(8) Groundcover: Shall be planted with triangular spacing at a distance that will typically ensure 100 percent coverage within one year of installation.

(9) Turf: Turf shall be used for passive and active recreational uses. Turf areas shall be of a size and configuration to permit the most effective use of mechanized maintenance equipment and reduce edging. Small decorative turf areas are not permitted.

(10) Mulch: Mulch shall be used to retain soil moisture and deter weed growth. All shrub and groundcover areas shall have a two inch minimum layer of mulch. All non-planted areas shall also be covered with a two inch minimum layer of mulch.

(11) Coastal Bluffs: Plant material used adjacent to coastal bluffs shall be native or naturalized to minimize the need for irrigation beyond initial plant establishment. Existing plant materials that require supplemental irrigation should be removed and replaced with native or naturalized plant material.

2.17.2 Plant Selection

(1) Plant selection shall be consistent with Council Policy No. 200-14, Park and Recreation Facility Landscape Design.

(2) General: Select only those species which are considered relatively disease and pest-free, and require minimal trimming to be maintained in a safe and attractive condition. The Park and Recreation Department retains the right to prohibit any plant material generally known to require excessive maintenance due to factors such as, but not limited to, disease, pest control, troublesome root development, ultimate size and difficult growth habits.

(3) Drought-Tolerant or Native Plant Materials: The use of drought tolerant or native plant material that is particularly compatible with our local environment is encouraged to promote water conservation and reduce maintenance costs.

(4) Trees: Trees shall be selected to provide a succession of growth, enhance the uniqueness of the site and provide shade and seasonal interest. To provide a succession of growth, an even mix of fast growing and slow growing trees shall be provided, i.e. mix of Acacia trees with Oak trees. To enhance the uniqueness of the site, tree species shall be selected that create a sense of place, i.e. Palm trees at beach locations or Sycamore trees for inland areas. To provide shade and seasonal interest, a mix of evergreen and deciduous trees should be provided.

(5) Turf Species: The preferred turf species is one that is drought tolerant and stays green throughout the year. Consult with the Park and Recreation Department for the appropriate turf species per site conditions and use. Rate of application shall be determined by the type of turf species.

(6) Non-Irrigated Seed Mixes: All non-irrigated seed mixes shall be installed between the months of October and February only.

(7) Invasive Plant Materials: The American Society of Landscape Architects and the California Native Plant Society have prepared the Invasive Ornamental Plant Guide, listing plant materials that are considered to be invasive. Two lists are available; one listing "most invasive" species and one listing "moderately invasive" species. The Invasive Ornamental Plant Guide may be found at http://www.asla-sandiego.org. Plants found on the "most invasive" list shall not be used in any City parks without approval of the Park and Recreation Department. Plants found on the "moderately invasive" list shall not be used in City parks adjacent to open space areas or multi-habitat planning areas. See Appendix L for additional information.

2.17.3 Installation Criteria

(1) Agricultural Suitability Soil Tests: The consultant shall obtain an agricultural suitability soil test on the site soil and incorporate the results and recommendations into the construction plans and specifications. The test results shall determine the type and rate of soil amendments, leaching requirements, and post-installation maintenance requirements. Soil testing during construction shall be per the "Whitebook" and shall be the responsibility of the Contractor.

(2) Tree Staking: Trees shall be staked per San Diego Standard Drawings.

(3) Root Barriers: Trees located within ten feet of walkways or other surface improvements shall be installed with root barriers adjacent to the walkway or surface improvement; do not install root barriers around the root ball. The length of the root barrier shall be a minimum of ten feet from the center of the trunk in both directions of the tree. Root barriers shall be made of a rib system, polypropylene material with a minimum thickness of 0.08 inch and a minimum depth of 24 inches.

(4) Tree Grates: Tree grates shall be cast iron or steel with expandable center openings, and must meet current ADA requirements. Concrete tree grates are not acceptable. The minimum size for tree grates shall be 40 square feet per Municipal Code requirements.

(5) Turf Establishment: Turf planted from seed or stolons shall have a 120 calendar day plant establishment period. Turf planted from sod shall have a 90 calendar day plant establishment period.

2.18 ARTIFICIAL TURF

2.18.1 Application: Synthetic turf systems may be considered for use in public park facilities when intended for permitted, active sports-related recreational activities or to replace small, high use natural turf areas that are difficult to maintain as determined by the Park and Recreation Director.

2.18.2 Joint Use Areas: Synthetic turf may be considered for use in joint use facilities where the proposed turf area is 1.5 acres in size or smaller, and shall meet all the installation criteria listed herein unless approved otherwise by the Park and Recreation Director and the participating joint use partner. Joint use facilities may not be subject to permitted use only criteria identified in 2.18.1, Application; they may be open to the public per the conditions stated in the joint use agreement for that particular site.

2.18.3 Special Use Permit and Leasehold Areas: Synthetic turf may be considered for use on city parkland when requested by organizations holding a Special Use Permit or long-term lease agreement with the City. Upon approval by the City, the organization requesting the use of synthetic turf shall agree to adhere to the installation criteria herein and shall provide all necessary funding to install and maintain the synthetic turf to the City's satisfaction.

2.18.4 Installation Criteria:

(1) The synthetic turf system for athletic fields shall be a crumb rubber, crumb rubber and silica sand, synthetic or organic infill type with a subterranean drainage system sufficient to allow the playing surface to drain quickly.

(2) The manufacturer shall have local or regional representation capable of performing repairs and providing maintenance advice in a timely manner.

(3) All components of the synthetic turf system shall meet or exceed relevant federal, state and local health requirements. Manufacturers shall be required to fully disclose all materials used in the manufacture of the synthetic turf system and provide complete information on all potentially toxic constituents.

(4) The project specifications for a synthetic turf system shall include provisions to secure the necessary equipment and training to properly maintain the synthetic turf system according to the manufacturer's recommendations and warrantee requirements.

(5) A synthetic turf facility for sports related activities shall be by permit only, unless otherwise supervised by City staff, and shall be designed to be secured when not in use.

(6) Signs shall be posted with user health and safety guidelines at all synthetic turf fields. These signs shall include, but not be limited to, advising users how to recognize heat-related illnesses and the proper steps to take to moderate and treat such illnesses, emphasize good hygiene such as washing hands after playing and practicing, and standard first aid for skin wounds to prevent infections.

(7) Signs shall be posted to indicate which activities are allowed and not allowed on the synthetic turf. These signs shall address, but not be limited to, items such as food, drinks, pets and certain types of chairs, umbrellas, athletic shoes and athletic equipment which may damage the turf and invalidate the manufacturer's warranty or shorten the product's life expectancy.

(8) Sun shade and drinking fountains shall be provided near the synthetic turf field. Where shade and/or drinking fountains cannot be provided due to design or site constraints, efforts shall be taken to encourage users to provide acceptable portable shade systems and drinking water.

(9) Each synthetic turf installation shall include a water system including quick coupling valves to assist in the proper maintenance of the system. Potable water shall not be used to cool the synthetic turf playing surface.

(10) The recyclability of the synthetic turf and infill components shall be considered when selecting the synthetic turf type to assure the materials can be recycled at the end of the useful life.

(11) Synthetic turf fields shall not be installed in flood prone areas due to potential damage to the turf and possible dissemination of synthetic turf materials, such as the infill material, into storm drains or natural drainage courses.

(12) When possible, prior to installation of the synthetic turf system, the City shall identify a funding source for the replacement of the synthetic turf at the end of its life expectancy. The funding source shall include the costs for recycling and/or legal disposal of removed synthetic turf components.

(13) Synthetic turf may be considered for smaller areas other than athletic fields where the extensive use causes soil compaction and makes natural turf difficult to maintain, such as adjacent to playgrounds or other high use passive areas. In these smaller areas, synthetic turf systems that do not use an infill and are not designed for athletic use may be considered.

2.19 REQUIREMENTS AND STANDARDS FOR ALL BUILDINGS

2.19.1 Sustainable Buildings: Building design and construction shall comply with City Council Policy No. 900-14, Sustainable Building Policy (see Appendix B).

2.19.2 Facilities Maintenance Division Standards: Unless specifically noted in this Consultant's Guide, all new and retrofitted buildings shall meet the most current *Standards and Specifications Guidelines from Facilities Division*. The consultant shall obtain the most current version from the Project Manager (see Appendix G).

2.19.3 Building Colors: Building colors shall be selected by the Consultant and approved by the Park and Recreation Department. Buildings in Mission Bay Park must use the approved Mission Bay Colors (see Appendix E). See Appendix E for all buildings required to be 'City Tan' color.

2.19.4 Toilets, Urinals and Sinks: Fixtures shall be wall hung and of heavy duty stainless steel construction (penal quality). Porcelain fixtures may be used in recreation centers and similar facilities upon approval by the Park and Recreation Department. Sinks in recreation centers, aquatic facilities and similar use buildings shall be plumbed for tempered water. Sinks in comfort stations shall be plumbed for cold water only. See Appendix G for additional information.

2.19.5 Toilet Paper Dispensers: Shall be provided in each stall and shall be anti-theft multi-roll with two or more roll storage capacity.

2.19.6 Soap Dispensers: Provide at least one wall mounted soap dispenser in each restroom.

2.19.7 Electric Hand Dryer: Provide at least one electric hand dryer in each restroom. Remove the heating element from dryer.

2.19.8 Exterior Building Lights: Exterior building lights shall be surface mounted. All exterior doors shall have a surface mounted light above the door. Exterior building lights shall have a minimum clearance of seven feet from grade.

2.19.9 **Recessed Ground Lights:** Lights recessed in paving or landscaping are discouraged due to potential vandalism and water damage. If the design requires recessed ground lights they shall be Hydrel fixtures or approved equal.

2.19.10 **Electrical Outlets for Beverage Machines:** Provide a 110/120 volt duplex receptacle on a separate 20 ampere circuit on the exterior of each building for beverage machines. Provide a concrete pad large enough to accommodate two beverage machines side-by-side with adequate circulation space to meet ADA requirements. Locations shall be approved by the Park and Recreation Department.

2.19.11 **Bird-proofing:** Design buildings and eaves to discourage bird nesting. Any openings where birds can nest shall be protected with netting or other appropriate materials.

2.19.12 **Partition Walls:** Masonry building partition walls that are not full height (floor to ceiling) shall have a rounded mortar cap to prevent objects from being placed or hidden on top.

2.20 COMFORT STATIONS

Comfort stations may contain men's and women's restrooms, an electrical room for SDG&E, a plumbing chase, a Park and Recreation storage room, a community storage room, and a concession stand room if located adjacent to sports fields. Comfort stations shall include the following specific requirements:

2.20.1 **Building Design:** The building design and materials shall harmonize with the design of the park's theme or natural character. The building shall be designed to facilitate natural air ventilation. If an exterior privacy wall is needed at the entries to the comfort station, the wall should be no larger than necessary and shall not be L-shaped. The entrance to the comfort station shall face the main area of activity. The plumbing chase shall be accessed from the exterior of the building and not from a storage room or from the restrooms.

2.20.2 **Fixture Locations:** All fixtures shall be located on a common wall with the plumbing chase on the opposite side.

2.20.3 **Floors:** Floors shall be a reinforced concrete slab and foundation. Foundations shall not interfere with sewer lines. Floors shall slope to the building's drainage. Floors shall have a vapor barrier beneath. Provide a concrete sealer for the floors.

2.20.4 **Floor Drains:** Floor drains shall be a drainage channel located at the base of the wall on which the plumbing fixtures are mounted. The drainage channel shall be continuous and have a 1% minimum slope. The drainage channel shall have an ADA compliant drainage grate. Outdoor showers or drinking fountains located at beach areas may drain to a sump.

2.20.5 **Walls:** All walls shall be reinforced, solid grouted concrete block masonry. All walls shall be treated with an anti-graffiti coating inside and outside, including the ceiling of the comfort station. Anti-graffiti coating shall be per Appendix E.

2.20.6 **Roofs:** See Facilities Maintenance Division Standards for roofing requirements. Roofing shall complement the building and shall harmonize with the design of the park's theme or natural character.

2.20.7 **Exterior Doors and Frames:** Frames shall be steel with heavy duty door hardware. The exterior door to the electrical or plumbing chase room shall be a single door with louvers. Exterior doors to storage rooms shall be double doors with removable center mullions. Exterior doors to restrooms may be a tubular steel gate. See Appendix G, Facilities Maintenance Guide Specifications, for additional information.

2.20.8 **Men's and Women's Signs:** Provide signage with the international symbol for accessibility as required.

2.20.9 **Plumbing and Electrical Chase:** Plumbing pipes and electrical conduit shall be exposed and secured to the wall in a 2 foot-6 inches minimum width plumbing chase. Provide one exterior loose key hose bibb at the front of the building. Provide an electrical outlet in the plumbing chase. The plumbing and electrical pipes shall not prevent maintenance access throughout.

2.20.10 **Lighting:** Light fixtures shall be vandal resistant and mounted a minimum of seven feet above the floor or finish grade (measured to the bottom of the light fixture). Interior lights shall be 26 watt fluorescent with at least two fixtures in each restroom and one fixture in the plumbing chase. Exterior lights shall be 50 watt high pressure sodium. Interior lights shall be on a separate circuit from the exterior lights. Interior lights shall be operated by a timer located in the plumbing chase or Park and Recreation storage room. Exterior lights shall be operated by photo cell.

2.20.11 **Interior Stall Doors and Partitions:** Shall be one inch thick stainless steel or solid plastic. Hardware for stalls shall be heavy duty stainless steel or aluminum; Zamac (pot metal) hardware is not acceptable. The color and finish of interior doors and partitions shall be selected by the Consultant and approved by the Park and Recreation Department. Partition walls may also be constructed using concrete masonry units.

2.20.12 **Dressing Rooms and Showers:** Provide at beach areas only. Showers shall be provided on the exterior of the building. Install at least two lights in each of these areas.

2.20.13 **Storage Room:** Shall be properly ventilated and protected from floor moisture. Provide a phone jack and electrical outlet in the Park and Recreation storage room.

2.20.14 **Concession Stand Room:** For parks with league activities, a concession stand room shall be provided with a 100 amp electrical panel, electrical outlets, and lights. Each outlet shall be on separate circuit. Provide potable water, a service window and other components as determined by the Park and Recreation Department. Concession stand rooms shall meet County Department of Environmental Health requirements for the intended use.

2.21 RECREATION CENTERS

These facilities may include a lobby with a reception counter, offices for at least three staff members, a gymnasium, multi-purpose rooms, a kitchen (to provide warming of food only), a large storage room for athletic equipment with access from outside and inside, small storage rooms for maintenance equipment, a set of restrooms near the lobby and one set in the back of the building, and an electrical room.

2.21.1 **Building Design:** The building design, location and materials shall harmonize with the park's theme or natural character. The building entry shall be visible from the public street and communicate public pride. It is preferred that the parking area(s) be provided on the side(s) of the building to maintain the view of the building entrance.

2.21.2 **Acoustic Insulation:** Rooms used for loud activities shall be acoustically insulated.

2.21.3 **Exterior Doors:** Shall be hollow metal and provided with thresholds. Keying requirements shall be per Appendix G, Standards and Specifications Guidelines from Facilities Division.

2.21.4 **Interior Stall Doors and Partitions:** Shall be one inch thick stainless steel or solid plastic. Acceptable hardware for stalls shall be heavy duty stainless steel or aluminum; Zamac (pot metal) hardware is not acceptable. The color and finish of interior doors and partitions shall be selected by the Consultant and approved by the Park and Recreation Department.

2.21.5 **Interior Lighting:** Provide vandal resistant lighting mounted a minimum of seven feet above finish floor in all public areas (measured to the bottom of the light fixture). Lighting shall be electrical ballast type, and designed to minimize electrical energy use.

2.21.6 **Interior Doors and Hardware:** Shall be wide enough to allow easy installation and removal of equipment or furniture in the rooms. Double doors with exit hardware shall be used with removable center mullion. Provide standard 3 foot by 7 foot by 1-3/4 inch thick doors installed with heavy duty hardware. Closers are to be mounted with through bolts. Provide stainless steel hardware in coastal areas.

2.21.7 **Roofs:** Heating, ventilating and air conditioning equipment shall not be roof mounted. Roofs and exterior walls shall have thermal insulation.

2.21.8 **Gymnasium Rooms:** Rooms with wood floors shall not contain drinking fountains or other water sources. Minimize protrusions, including door knobs, in high speed play areas. Wall vents in these rooms shall be located such that malfunctioning irrigation heads or wind driven rain cannot damage the floor. The floor design shall provide air circulation below the floor. All gymnasium floor designs shall include game striping plans.

2.21.9 **Gymnasium Scoreboards:** Shall have a hinged polycarbonate protective cover installed to prevent damage from balls.

2.21.10 **Security Alarm Systems:** Shall be specified where necessary. Consult City Project Manager for acceptable types and necessary locations.

2.21.11 **Fire Sprinkler System:** Shall be per applicable Building Codes.

2.21.12 **Ceiling Height:** The ceiling height of each room shall be sufficient for the activities intended. Ceiling height should take into consideration and suspended lighting, ventilation, fire sprinkler systems and other building systems.

2.22 AQUATICS FACILITIES

2.22.1 **General:** Specific facilities and site detailing shall be coordinated with the Park and Recreation Department Aquatics Program and Aquatics Maintenance Staff. The standards listed below are minimum requirements. Consult the Americans with Disabilities Act Accessibility Guidelines, California Health and Safety Code, California Code of Regulations, California Building Code and California Electrical Code in the design of swimming pool facilities.

2.22.2 **Buildings:** Pool buildings shall contain a reception desk, staff offices, a pool manager office, a staff restroom/shower, a first aid room, a meeting/training room, locker rooms/restrooms, a family changing room, a pool supplies storage room, outdoor showers, a mechanical room and an electrical room.

(1) Reception Desk: Provide a reception desk at the main facility entrance separate from staff offices.

(2) Staff Offices: Provide a central office space with room for four staff members and desks, a copier, water cooler and other usual office equipment. Provide built-in storage for office supplies, forms, records and other materials. The staff office shall be connected directly to the pool deck area.

(3) Pool Manager's Office: Provide a separate pool manager's office with a direct view of the pool area. The pool manager's office shall be directly connected to the main office.

(4) Staff Facilities: Provide a separate restroom with shower facilities for staff directly connected to the main office.

(5) First Aid Room: Provide a first aid room with an entrance off the pool deck. Provide a sink with a sensor activated faucet and soap dispenser to minimize contamination. Provide an electric hand dryer with the heat element removed.

(6) Meeting/Training Room: Provide a meeting and training room approximately 300 square feet in size.

(7) Locker Rooms/Restrooms: Provide separate locker rooms with restrooms for men and women, with the entrances clearly differentiated. Provide the following minimum facilities:

- Four showers per side, plumbed for tempered water, with one soap dispenser per shower.
- Four toilets per side with one multi-roll, anti-theft toilet paper dispenser and one toilet seat cover dispenser per stall.
- Four restroom sinks each side, plumbed for tempered water, with sensor activated faucets and soap dispensers to minimize contamination.
- Twenty lockers per side, constructed of solid high density polyethylene (HDPE) with padlock hasps.
- Benches to seat twenty people, constructed of non-corrosive materials (no steel). Benched shall be surface mounted.
- Two dressing stalls per side.
- Stainless steel towel hooks.
- Ceiling mounted exhaust fan.
- One heater per side (gas preferred).
- Natural illumination when feasible. Skylights shall have security grates beneath.
- Floor drains, a minimum of one floor drain per 100 square feet of floor area. Showers shall have one floor drain each. Floor drains shall be tied into the sewer system with a minimum four inch size pipe.
- Floors shall slope at 1.5 percent maximum in any direction toward the floor drains.
- One electric hand dryer for each pair of sinks, with the heat element removed.
- One diaper changing station per side.
- One janitorial closet per side.

- Flooring in restrooms and locker rooms shall be as specified in the Approved Manufacturers and Products List, Appendix E.

(8) Family Changing Room: Provide a minimum of one family changing room with a toilet, sink, shower and diaper changing station. Provide a sensor activated faucet and soap dispenser with the sink. Plumb the sink and shower for tempered water. Provide a soap dispenser for the shower. Provide a floor drain tied into the sewer system with a minimum four inch size pipe.

(9) Pool Supplies Storage Room: Provide a storage room with shelving for pool equipment and instructional items. The storage room shall be approximately 150 square feet in size.

(10) Outdoor Showers: Provide a minimum of four outdoor showers, plumbed for tempered water. Provide a minimum of one floor drain per 100 square feet of shower area, tied into the sewer system with a minimum four inch size pipe.

(11) Mechanical Room: Provide a separate mechanical room for pool pump, filter and chemical mixing equipment.

- The pool pump, filter and associated equipment shall occupy the main area of the mechanical room. The mechanical room shall be sized adequately to house the required equipment and allow adequate space for maintenance and replacement.
- Provide a separate room for the chlorine storage tank, with a locking chain link gate that opens to the main area of the mechanical room. Size the room for a 500 gallon tank.
- Provide a separate room for the CO_2 storage tank, with a locking chain link gate that opens to the main area of the mechanical room.
- Provide double doors with a minimum width of six feet for the main entrance to the mechanical room. Main doors shall open to the parking lot or other adequate access route.
- Provide a utility sink in the mechanical room.
- Provide a minimum of one floor drain per 100 square feet, connected to the sewer system with a minimum four inch size pipe.
- Provide a hoist mount in the ceiling above the pool equipment. The mount shall be capable of supporting the weight of the equipment specified plus 200 pounds.

(12) Electrical Room: Provide a separate electrical room to house all electrical panels and meters. The electrical room shall be accessible from the exterior of the building.

2.22.3 Swimming Pools and Decks

(1) Deep Water: The deep area of the pool shall be designed to accommodate competitive swimming, water polo and synchronized swimming (25 yards by either 25 or 50 meters) with a minimum of six lanes at a minimum depth of nine feet. Deep water is also required for high level instruction (lifeguard training and diving instruction). Orientation for lap lanes shall be on a north/south axis. However, rope anchors shall be installed so lane directions can be changed to allow for multiple programs in the pool at one time.

(2) Shallow Water: The shallow area of the pool shall be designed to best serve the instructional needs of participants. The maximum depth at the shallow end of the pool shall be three feet. Where space allows, shallow areas shall be between 18 inches and four feet-six inches (4'-6"). Where a sloped entry is used to meet accessibility requirements, a majority of the shallow area shall be between the depths of 18 inches and 4 feet six inches (4'-6"). Rope anchors and a black tile warning stripe shall be placed at the grade break at the four foot-six inch depth.

(3) All new pools shall be designed with a perimeter gutter system with the water level a maximum of twelve inches below the top of coping. Do not design for coping flush with the water level (overflow pool).

(4) Entrance to swimming pools shall be ADA compliant, and shall be accomplished via pool steps and either a swimming pool lift or a sloped entry.

(5) All swimming pools shall be surfaced with white plaster.

(6) All tiles for lane lines, targets stair tread contrasting stripes and warning stripes shall be black, unglazed ceramic.

(7) All water line tiles shall be glazed ceramic with the color selected by the Park and Recreation Department.

(8) Pool lighting shall be accomplished through the use of light emitting diode (LED) pool lights in dry niche sockets. Pools shall be illuminated to 15 candelas per square meter with a uniformity of 4:1 or less from maximum to minimum lighting.

(9) Pool decks shall be Portland cement concrete with a design strength sufficient to support heavy maintenance vehicles. Due to corrosion concerns, avoid the use of traditional steel reinforcement. Use light colors for concrete decks to avoid heat build-up.

(10) The pool deck shall be illuminated to the standards identified in Title 24 of the California Building Code. See Section 2.15, Site and Sports Lighting. Avoid glare on the pool surface that may obscure views into the pool.

(11) The entire pool area shall be secured with a ten foot high vinyl coated chain link fence per San Diego Standard Drawings. Provide top, middle and bottom rails. The chain link fabric shall have a one-inch mesh. Provide wind screens to a height of six feet.

(12) Provide a twelve foot wide double swing gate at the deck area for emergency and repair vehicles. The gate shall be black vinyl coated chain ling with one-inch mesh fabric. Provide wind screens on the gate to a height of six feet.

(13) Provide a ten foot high by ten foot by twenty foot chain link storage area with a roof for pool equipment storage. Provide a double gate at the end of the storage area. Fencing shall be vinyl coated chain link with a one-inch mesh. Provide wind screens to the full height of the storage area.

(14) Provide one high-low drinking fountain on the pool deck.

2.22.4 Spectator Seating Area

(1) Provide a spectator seating area that is physically separated from the pool deck with a four foot high vinyl coated chain link fence. Provide a four foot wide self-closing chain link gate between the spectator seating area and the pool deck.

(2) The spectator seating area shall be secured with a ten foot high vinyl coated chain link fence. Provide a four foot wide self-closing chain link gate to the exterior of the pool complex. Provide wind screens on the fence to a height of six feet.

(3) Provide a shade structure over the spectator seating area.

(4) Provide two 15-foot long, three-row, aluminum tip-and-roll bleachers for the spectator seating area.

2.23 GRAFFITI PROTECTION

All building walls, site walls, and concrete amenities such as tables, benches, drinking fountains, etc. shall be treated with a non-sacrificial anti-graffiti material. See Appendix E for anti-graffiti materials and application.

3. GRAPHIC AND DRAFTING STANDARDS

To ensure consistency and clarity, the following graphic and drafting standards apply to all park projects. These standards are to be adhered to in the preparation of General Development Plans, Construction Plans and As-Built Plans. If the project requires a Discretionary Permit, the plans will need to meet the additional criteria of the Development Services Department.

3.1 GENERAL DEVELOPMENT PLANS (GDPs)

3.1.1 Description: A General Development Plan (GDP) is a conceptual master plan for a park's design. The GDP is used in presentations to Park and Recreation advisory bodies, as a basis for public project assessment and environmental documentation, and as the exhibit on which Construction Plans will be based. The graphics and drafting requirements for General Development Plans shall conform to Park and Recreation Board Policy No. 1011. Refer to Appendix A, and the following criteria.

3.1.2 General Requirements for all GDPs

(1) All GDPs shall be on the approved Park and Recreation GDP border with all data blocks filled in (see Appendix M). An electronic version of the GDP border is available from the Park and Recreation Department.

(2) The project title shall be on all GDP plans and boards. The project title shall be "General Development Plan for (park name) Community Park or Neighborhood Park".

(3) Plans shall have a north arrow pointing to the top or left side of the page, and graphic and written scale.

(4) The GDP shall clearly indicate all on-site facilities including buildings, parking areas, play areas, walkways, site furniture, lighting, landscape materials, drainage, and other improvements. A legend or call-out shall be provided for all symbols.

(5) Property or limit of work lines shall be shown using bold lines to delineate the area of work.

(6) Conceptual planting and grading designs shall be shown on the plans. Grading and planting information may be shown on the plan or provided as separate exhibits.

(7) Play equipment safety zones and any critical dimensions are to be included.

(8) The GDP shall be colored for advisory body presentations.

3.1.3 **Grading:** Conceptual grading shall be shown on the GDP or as a separate plan for the entire project site. Clearly indicate existing and proposed contours.

3.1.4 **Planting Design and Palette:** All existing and proposed planting shall be shown on the GDP. Trees shall be represented graphically with a mature canopy. The plant palette shall provide categories identifying the form and function of the plant material, such as Street Trees, Canopy Trees, Accent Trees, Screening Shrubs, Accent Shrubs, Groundcovers, Slope Planting, etc. Recommended plant species for each category shall be provided.

3.1.5 **Building Plans and Elevations (if applicable):** When buildings are part of the park design, provide a plan showing the conceptual floor plan, roof plan and all elevations to clearly indicate the design of the structure. These plans shall be colored for advisory body presentations. A materials board shall be provided, showing samples of proposed exterior materials, colors and textures.

3.1.6 **Park Sign Plan and Elevation(s):** Provide a plan of the park monument sign, including elevations clearly indicating the sign elements and materials. Indicate the proposed sign location on the GDP.

3.1.7 **Special Site Details and Site Furniture:** Provide details, plans and elevations of any custom site elements, such as seat walls, overhead trellis structures, fencing, paving, etc. The materials and finishes shall be indicated in the details along with any critical dimensions. Provide catalog cuts of all proposed manufactured site furniture, play equipment and light fixtures, etc.

3.1.7 **Project Cost Estimates:** A project cost estimate shall be prepared during the design of the park and finalized at the end of the General Development Plan phase. All costs shall be included in the estimate, including a cost for a 90-day or 120-day plant establishment period and a 10 percent contingency.

3.2 CONSTRUCTION PLANS

3.2.1 **Description:** Construction Plans are the technical plans used for obtaining bids, the actual construction and the As-Built plans. These plans shall be prepared in compliance with the approved General Development Plan. All construction plans for parks shall be submitted to the City's Engineering Maps and Records section for final recording. Construction Plans shall meet the graphic and drafting standards listed below.

3.2.2 General Requirements for all Construction Plans

(1) Sheet Format: All projects shall be on City standard 'D' sheets (24 inch X 36 inch), with the Park and Recreation Department title block in the lower right-hand corner. Larger sheet sizes are acceptable with City Project Manager approval; however, the Park and Recreation title block must still be located in the lower right-hand corner.

(2) Title Block: Within the title block provide the Project Name and Phase (if applicable), Work Breakdown Structure (WBS) Number, Lambert Coordinates and Drawing D-sheet Number. Above the title block shall be 'Private Contract' or 'Public Contract', depending on the type of project. City Contracts shall also include the Capital Improvement Program (CIP) Number (if different from the WBS Number) and Special Specification Number above the title block.

(3) Lettering: Shall be capitalized and no smaller than 1/8 inch high when hand lettered, and no smaller than 1/10 inch high when mechanically or computer lettered. The space between lines of lettering shall be not less than one-half the height of the letters.

(4) Media: The final submittal for all drawings shall be on single or double matte mylar with a minimum thickness of 3 mils. Hand drawn plans shall be done in ink or plastic lead manufactured for use on plastic drawing film.

(5) Key Map: A key map shall be provided on each sheet if the project contains multiple plans.

(6) Matchlines: Matchlines for projects requiring multiple sheets shall be labeled to provide adequate reference for identification and cross-indexing to other plans.

(7) North Orientation: North arrow with scale shall be shown on each sheet. North orientation of plan shall be to the top or to the left side of the plan.

(8) Scale of Plans: All plans shall be done at a scale no smaller than 1 inch = 30 feet. Prior Park and Recreation Department approval is necessary if projects require a smaller scale to fit onto sheet size. If additional detail is required, a larger scale is to be utilized to provide sufficient clarity. Provide a written and graphic scale on all plans.

(9) Limit of Work: A limit of work line shall be provided showing the project area of work.

(10) Streets: Label streets that are adjacent to the project or within the project's immediate area.

(11) Professional Registration Stamp: The professional registration stamp of the architect or engineer responsible for the plan shall be provided on all plans, signed and dated.

(12) Provide the following note on all plans: "SHEET SIZE AND SCALE: IF SHEET SIZE IS LESS THAN 24" X 36", IT IS A REDUCED PRINT - SCALE ACCORDINGLY."

3.2.2 Title Sheet: Title sheet shall include but not be limited to the following:

(1) Name of Project: The project name and the project phase, if applicable, shall be placed at the top of the Title Sheet in 48 point font or larger.

(2) Vicinity Map: A vicinity map showing nearest arterial intersection, street names, north arrow and project location.

(3) Location Map: A location map showing the project area and applicable street names, north arrow, matchlines, project limits, tract boundaries and scale.

(4) Project Address: Provide a brief legal description and street address.

(5) Project Directory: A project directory that lists the prime consultant and all the sub-consultants firms, addresses, phone numbers, fax numbers and e-mail if applicable.

(6) Sheet Index: Provide a sheet index listing plans by Sheet Number, D-Sheet Number and Sheet Title.

(7) Right Hand Margin: The project name shall be provided on the right hand margin of the title sheet.

(8) Survey Data: The survey data shall be provided by listing the following applicable aerial, field survey or benchmark information on the Title Sheet:

Aerial Survey	Field Survey	Benchmark
Party Chief:	Party Chief:	Description:
Contractor:	Date:	Location:
Date:	Index:	Elevation:
Coordinate Index:	Work Order:	
Work Order No.:		

(9) Bid Alternates: 'Deductive' or 'Additive' alternates shall be listed, if applicable, on the title sheet in order of preference. Describe each alternate and reference the applicable plans for further description.

(10) Existing Drawings Affecting the Project: Reference on the Title Sheet all existing drawings affecting the project, such as prior grading or street improvement plans, with a work order number or building permit number.

(11) Provide the following note on the Title Sheet:

Description of the Scope of Work:
(Provide a brief description of all the work to be done)

(12) Provide the following note on the Title Sheet:

Applicable Standard Drawings and Specifications:

Greenbook - Standard Specifications for Public Works Construction including the City of San Diego "Whitebook" supplement to the Greenbook (current edition).

City of San Diego Standard Drawings (current edition).

Disabled Access Regulations, Title 24, (current edition) and California State Accessibility Standards Interpretive Manual (current edition) prepared by the Office of the State Architect and the Department of Rehabilitation.

Americans with Disabilities Act Regulation: ADAAG (The Americans with Disabilities Act Accessibility Guidelines) issued by the Architectural and Transportation Barriers Compliance Board (current edition).

Manual of Traffic Controls for Construction and Maintenance Work Zones, State of California Department of Transportation (current edition).

U.S. Consumer Products Safety Commission Handbook for Playground Safety (current edition).

Note: The most current editions of the preceding documents shall be used. Where one or more sets of specifications or drawings are applicable, the more restrictive shall take precedence.

(13) Provide the following note on the Title Sheet:

CAUTION:
Before excavating, verify the location of underground utilities. At least two (2) working days prior to excavation, the Contractor shall request mark-out of underground utilities by calling the below listed regional notification center for an inquiry identification number:

Underground Service Alert (Gas, Electric, Telephone, Water, Sewer, Lighting, and TV)	(800) 422-4133
Irrigation Systems	(619) 533-5783
Irrigation Control Wire:	(619) 533-5783
Facilities Maintenance Division	(619) 525-8500

(14) Provide the following note on the Title Sheet:

Declaration of Responsible Charge:

I hereby declare that I am the (Engineer, Landscape Architect, Architect) of Work for this project, that I have exercised responsible charge over the design of the project as defined in Section 6703 of the Business and Professions Code, and that the design is consistent with current standards.

I understand that the check of project drawings and specifications by the City of San Diego is confined to a review only and does not relieve me, as (Engineer, Landscape Architect, Architect) of Work, of my responsibilities for project design.

_____

Name of (Engineer, Landscape Architect, Architect), License Number, Date
Firm Name (Engineer, Landscape Architect, Architect)
Address
Phone Number
Fax Number
Email Address

(15) Provide the following note on the Title Sheet:

Park Construction Inspection Stages and Inspection Team:

Park Inspection Team

A. Site Superintendent (Contractor/Developer's Representative)

B. Contractor(s)

C. Resident Engineer from Field Engineering Department

D. City Project Manager

E. Design Consultant

F. Park and Recreation District Manager

G. Park and Recreation Asset Manager

Park Construction Inspection Stages: (Minimum depending on project)

1. Pre-construction meeting.
2. Rough grading and drainage.
3. Irrigation mainline pressure test.
4. Irrigation lateral line pressure tests.
5. Wiring prior to backfilling trenches.
6. Hardscape at time of finished staking and layout.
7. Finish grading and soil preparation.
8. Irrigation coverage test.
9. Plant material (when delivered) and placement approval.
10. Play Ground Inspection, if applicable.
11. Project construction 90 percent complete (develop punch list and submit red-line As-Builts).
12. 90-Day Plant Maintenance Period (this inspection is to be held when the punch list items are complete. If turf area is planted from seed or stolons the plant maintenance period shall be 120-days).
13. Final walk-through, acceptance by the City. Contractor to submit final approved As-Built drawings to the City.

(16) Provide the following note on the Title Sheet:

WATER FEES:
The City of San Diego Project Manager and the Consultant shall coordinate the following: Water and Sewer Capacity Fees and the Wet Tap Fees shall be pre-paid by the City for City contracts; the Contractor shall pay all other construction and maintenance water meter and sewer fees, and shall coordinate with the Water Utilities Department for installation of services. Allow three (3) months notice to the Water Utilities Department. For Developer-Built projects, all fees shall be paid by the Developer.

3.2.3 **Demolition Plans:** Demolition plans shall be included for all park sites with existing improvements that will require demolition. The plans shall clearly show all improvements to remain and all improvements to be removed. Improvements both above ground and below ground shall be shown. Clearly label all utilities and easements. Demolition notes shall be included on the plans.

3.2.4 **Grading and Drainage Plans:** Grading and drainage plans shall conform to the City's Manual for the Preparation of Land Development and Public Improvements and the Municipal Code Grading Ordinance. Grading plans shall be prepared by a professional, as licensed and allowed by the California Business and Professions Code. The following shall be included on the plans.

(1) Existing and Proposed Finished Grades: Existing and proposed finish grades shall be graphically shown on the plans with minimum two foot contours and spot elevations for the entire site and within 50 feet of the site boundaries. The plan must clearly show how the site will drain and to where. All areas of the site must have positive drainage.

(2) Spot Elevations (existing and proposed): Spot elevations shall be shown at all high points, low points, changes in gradients, changes in elevations (stairs, curbs, etc.), hardscape, corners of structures, finish floor elevations, drain locations and inverts, top and bottom of walls, and any other locations necessary to indicate the proposed grading design.

(3) Slope Gradients: Slope gradients shall be labeled as a percentage or as a ratio.

(4) Property Lines and Off Site Grading: Clearly show property lines and indicate all off-site grading. Provide a letter of permission from the adjacent land owners for proposed off site grading.

(5) Limit of Grading: Areas to remain undisturbed shall be indicated on the plans.

(6) Grading and Drainage Details: Grading and drainage details shall be provided for all details that do not conform to the City of San Diego Standard Drawings.

(7) Grading Notes: Grading notes shall be provided on the plans.

3.2.5 **Stormwater Management Plans:** Provide stormwater management plans suitable to the project per Storm Water Department regulations and the San Diego Municipal Code.

3.2.6 **Layout and Construction Plans:** Layout and construction plans shall include but not be limited to the following:

(1) Existing and Proposed Improvements: Walkways, paving, mow curbs, fences, walls, site furniture, multi-purpose courts and fields, play areas, buildings, parking lots, signs, trails, etc., shall be graphically located on the plans.

(2) Horizontal Control: All proposed improvements shall be located on a horizontal control plan.

(3) Construction Legend: Shall include all symbols used on the plan.

(4) Site Amenities and Materials Legend: Legend shall include a symbol, manufacturer/model no., description of material, color, detail number, and other information, as required.

(5) Construction Details: Construction details shall be provided for all details that do not conform to the City of San Diego Standard Drawings.

(6) Construction Notes: Construction notes shall be provided on the plans.

(7) Construction Specifications: Construction specifications shall be provided on the plans, or provided in a specification book with the City Project Manager approval.

(8) Playground Construction Notes: Provide the following notes on the Playground and Equipment Plans:

CONTRACTOR EXPERIENCE:
The contractor shall have National Playground Safety Institute (NPSI) certification for installers and in addition the installers shall be certified by the equipment manufacturer to install their equipment and surfacing. The NPSI certified installers shall be involved in the construction of the playground at all times during construction and including preparation of the subgrade.

PLAYGROUND AUDIT / NPSI CERTIFICATION:

The Contractor shall be responsible for providing an independent third party audit of the playground area, surfacing and all play equipment. The audit shall be conducted by a NRPA/NPSI Certified Playground Safety Inspector in accordance with NPSI standards. The audit shall determine compliance of the playground area, surfacing and all play equipment with the most current versions of accessibility and safety standards, including the following: Americans with Disabilities Act (ADA); Consumer Product Safety Commission (CPSC) Handbook for Public Playground Safety; the American Society for Testing and Materials (ASTM) Standard Consumer Safety Performance Specification for Playground Equipment for Public Use (ASTM F1487) and Standard Specification for Impact Attenuation of Surface Systems Under and Around Playground Equipment (ASTM F1292) and Standard Specification for Determination of Accessibility of Surface Systems Under and Around Playground Equipment (ASTM F1951). Poured-in-place resilient surfacing shall be tested on site after installation in accordance with ASTM F1292; Manufacturer's certification is not acceptable.

The Contractor shall be responsible for correcting any items found not to be in compliance with the above standards as a result of the audit, at no charge to the City. The Contractor shall provide to the Resident Engineer and Project Manager a signed letter stating that the playground area, surfacing and play equipment comply with all current applicable accessibility and safety standards. The letter shall include an itemized list corresponding to each audit item, describing all corrections and the date each correction was competed. If applicable, the letter may state that any equipment in question is certified by International Playground Equipment Manufacturers Association (IPEMA). (Provide manufacturer's proof of IPEMA certification.)

3.2.7 **Irrigation Plans:** Irrigation plans shall include but not be limited to the following:

(1) Point of Connection and Meter:

- Service: Domestic or recycled.
- Water meter size and service lateral size.
- Water meter address.
- Installation requirements and responsibilities of the water purveyor and the Contractor.
- Available static water pressure at point of connection (POC).
- Design pressure.
- Peak flow through water meter (in GPM).

(2) Irrigation Booster Pump

(3) Backflow Prevention Device: Size (sized for a maximum 7.5 feet per second velocity).

(4) Wye Strainer.

(5) Pressure Regulator Valve (if required).

(6) Master Valve and Flow Sensor.

(7) Recycled water test station (recycled water systems only).

(8) Automatic Irrigation Controller: Location, number of stations, identifying letter and electrical service (or reference electrical plans for service).

(9) Rain Shut-Off Device.

(10) Isolation Valves.

(11) Remote Control Valves: Size, irrigation controller letter, valve station number and GPM.

(12) Quick Couplers (with globe valves).

(13) Irrigation Mainline and Size.

(14) In-line Check Valves.

(15) Irrigation Heads.

(16) Irrigation Lateral Line and Size

(17) Irrigation Sleeves.

(18) Control Wire Routing and Pull Boxes.

(19) Drinking Fountains: Locations and water source.

(20) Irrigation Legend: Shall include all symbols, manufacturer model number/size, description of equipment, radius, PSI, GPM, detail number or standard drawing number.

(21) Irrigation Details: Shall be provided for all details that do not conform to the City of San Diego Standard Drawings.

(22) Pressure Loss Calculations: Provide pressure loss calculations (incorporate residual loss factor) for the system with the highest pressure requirement for each controller. Pressure loss calculations shall take into account the need to run multiple valves at the same time to meet the irrigation water window identified in this Guide.

(23) Irrigation Notes: Irrigation notes shall be provided on the plans.

(24) Irrigation Specifications: Irrigation specifications shall be provided in a specification book.

3.2.8 Planting Plans: Planting plans shall include but not be limited to the following:

(1) Plant Symbols (trees, shrubs, vines, groundcovers, etc.): Proposed plant materials shall be graphically shown on the plans with a symbol that represents the mature size of the proposed species. Show all existing plant material that will remain on the site as a dash symbol.

(2) Planting Legend: The planting legend shall include the symbol, quantity, size, botanical name, common name, detail number, and any special remarks such as on-center spacing, tree height and width, variety or color.

(3) Seed Mix Information: Shall include the botanical name (s), % pure live seed, total pounds per acre, mulch, binder, fertilization and inoculation requirements. Identify if the seed mix is irrigated or non-irrigated.

(4) Planting Details: Planting details shall be provided for all installations that do not conform to the City of San Diego Standard Drawings.

(5) Planting Notes: Planting notes shall be provided on the plans.

(6) Fertilization Notes: Provide fertilization notes on the plans for both pre-planting application and post-planting (maintenance period) applications.

(7) Planting Specifications: Planting specifications shall be provided on the plans or in a specification book with City Project Manager approval.

3.2.9 Lighting Plans: Lighting plans shall include but not be limited to the following:

(1) Proposed Lighting: All security and sports lighting shall be graphically located on the plans including all light poles, fixtures, pull boxes, transformers, and other components. Sports lighting poles shall be shown with dimensions from identified landmarks for each pole location.

(2) Point of Connection: The service point shall be shown on the plans. If the point of connection is not within the project site, the service point shall be identified in a vicinity map detail. The San Diego Gas & Electric (SDG&E) planner and their phone number shall be identified on the plan. Any SDG&E fees shall be enumerated by an appropriate bid item.

(3) Light Fixture Legend: The light fixture legend shall include symbols for poles, fixture types, conduit size, panels and utility service points.

(4) Lighting Fixtures Schedule: The light fixture schedule shall identify manufacturer, model number, type of fixture, voltage and wattage.

(5) Panel Schedule: The electrical panel schedule shall designate circuits with the number of devices being served, voltage, number of phases, short circuit rating, load continues amperage, etc.

(6) Lighting Details: Lighting details shall be provided for all details that do not conform to the City of San Diego Standard Drawings, including but not limited to, conduit, pull box installation, foundation installation and configuration of all panels.

(7) Lighting Notes: Lighting notes shall be included on the plans.

(8) Lighting Specifications: Lighting specifications shall be provided on the plans or provided in a specification book with the City Project Manager approval.

(9) Sports Lighting Illumination Levels: Identity on the plans the foot-candle levels for each type of sports activity to be illuminated. Designate average maintained illumination levels and uniformity ratios (maximum to minimum).

(10) Sports Lighting Fixture Aiming: Identify on the plans the aiming point on the playing surface for each fixture.

(11) Sports Lighting Testing: Provide notes on the plans indicating the contractor is responsible for testing the lighting on each sports field, and for furnishing a written report to the City Project Manager indicating the testing results of the illumination levels in foot-candles and uniformity ratios for each field.

3.3 AS-BUILT PLANS

As-Built Plans are the final record of what was constructed. The Design Consultant, as part of the Consultant's contract, shall be responsible for correcting the original mylar construction plans to show the as-built conditions. The Design Consultant shall obtain the original mylars and the current requirements for "Drawings: Changes and Revisions" from City's Maps and Records Section. All as-built changes noted on the red line set shall be incorporated on the mylars with water-proof ink. The drafting shall be of equal quality to the original mylars. Erase all incorrect information and add any Field Engineer's comments. Provide the word 'As-Built' in large lettering in the margin below the Title Block on all sheets changed. The original Architect, Engineer or Landscape Architect must sign the as-built sheets.

4. PROJECT PROCESS, SUBMITTALS & APPROVALS

The project, submittals and approval processes will vary relative to the type of project and the phase of work being addressed. It is recommended that the Design Consultant meet with the City Project Manager to confirm the appropriate project process, submittals and approvals, for public or privately built parks prior to starting the project. The following outline is a typical process for park projects.

4.1 GENERAL DEVELOPMENT PLANS (GDPs)

4.1.1 **General:** The process for community notification and input for city-wide park development projects is outlined in Council Policy 600-33. The City Project Manager and Consultant shall review this policy at the start of the project. The City Project Manager shall determine what, if any, additional reviews and approvals may be required based on the scope, complexity and location of the project.

4.1.2 **Project Program Meeting:** The Design Consultant (Consultant) will meet with the City Project Manager and Park and Recreation Department representatives to review and discuss the proposed project program and budget. The Consultant will prepare a memo to the City Project Manager summarizing the proposed project program, a project schedule and any special issues or site constraints which will affect the outcome of the design.

Submittal: Memo of Proposed Project Program and Schedule.

4.1.3 **Workshop #1 - Public Input of a Preferred Project Program:** The City Project Manager will set up and advertise the first workshop with the officially recognized Recreation Council or Area Committee (Committee) for public input per Council Policy #600-33. The City Project Manager will prepare project information that outlines the roles of the City Project Manager, Consultant and the community members, the anticipated scope of work, the project budget and funding sources and projected time schedule. The City Project Manager and Consultant will present this information and the GDP process to the Recreation Council or Area Committee. The Recreation Council or Area Committee will provide input regarding the development of a preferred project program, as well as a community priority ranking of the proposed program elements (a written questionnaire can be used to get community input at the meeting and to document what was said). This information will give the City Project Manager and Consultant clear direction regarding community desires and will be used to develop conceptual alternatives that maintain community priorities and the project budget. The Consultant will prepare a summary report of the public input.

Submittal: Summary Report of Workshop #1, including preferred project program and priority ranking of program.

4.1.4 **Conceptual Alternatives Meeting:** The Consultant will prepare conceptual alternatives for review and discussion with the City Project Manager and Park and Recreation Department representatives (the number of alternatives that are appropriate for the individual project will be determined by the City Project Manager). These conceptual alternatives should show how the project program will be accomplished within the specific site, taking into consideration the site constraints and budget requirements. A preliminary statement of probable costs shall be developed and submitted to the City Project Manager.

Submittal: Conceptual Alternatives and Preliminary Statement of Probable Costs

4.1.5 **Workshop #2 - Community Input of Conceptual Alternatives:** At the second community workshop, the City Project Manager will present a summary of the preferred project program and the Consultant will present the conceptual alternatives to the Recreation Council or Area Committee for community input. The graphics for the conceptual alternatives shall comply with Park and Recreation Board Policy No. 1011 (see Appendix A). At this second meeting, the Recreation Council or Area Committee will have an opportunity to review and comment on the conceptual alternatives. Community members will be allowed to: a) recommend individual elements from the conceptual alternative to be synthesized into a preferred alternative plan, or b) recommend the presented conceptual plan that best meets the outlined project program and priorities identified in the first workshop.

Submittal: Summary Report of Workshop #2, including recommend conceptual alternative and/or recommended individual elements.

4.1.6 **Preferred GDP Meeting with City Staff:** The Consultant will incorporate the proposed revisions and prepare a preferred GDP and statement of probable cost for review and recommendation by the City Project Manager and Park and Recreation Department representatives.

Submittal: Preferred General Development Plan based on Workshop #2 and Statement of Probable Cost.

4.1.7 **Preliminary Meeting with Development Services Department:** The City Project Manager and the Consultant shall meet with Development Services Department staff to review the scope of the proposed project. The City Project Manager and Consultant shall prepare the Public Project Assessment package for submittal to the Development Services Department for permit assessment and environmental review.

Submittal: Public Project Assessment forms and submittal package.

4.1.8 **Area Committee Presentation:** Several Area Committees serve as the principal advisory body for a specific park. Examples include the Balboa Park Committee, the Black Mountain Park Citizens' Advisory Committee, and the Mission Bay Park Committee. These bodies shall be the initial advisory group as identified under Workshop #1.

Area Committee presentations addressed in this section apply to the Community Parks I and Community Parks II Area Committees. Area Committee presentations will be required for projects with a budget of $1 million or more, are controversial, have unusual maintenance requirements, or as determined by the Park and Recreation Director.

The City Project Manager will prepare the staff report to the Area Committee and distribute the specified number of copies through the designated Staff Representative for that Area Committee. At the meeting, the City Project Manager will present the project program and previous recommendations, and the Consultant will present the preferred General Development Plan to the Area Committee for recommendations.

4.1.9 **Additional Advisory Committees:** The City Project Manager will determine which additional advisory committees will be required based on the project type. For each of these additional meetings the City Project Manager will prepare the staff reports and other materials required, and distribute them through the designated Staff Representative. At each of these additional meetings the City Project Manager will present the project program and previous recommendations, and the Consultant will present the preferred General Development Plan. Additional Committees could include:

- Mayor's Committee on Disability
- Historical Resources Board's Design Assistance Subcommittee (HRB DAS)
- Historical Resources Board (HRB)

Note: If Historical Resources Staff determines a project must be reviewed by the Historical Resources Board, such review must occur after recommendation by the Park and Recreation Board. The environmental document, if any, must be the Final version for Historical Resources Board review.

4.1.10 **Design Review Committee Presentation:** The City Project Manager will prepare the staff report to the Design Review Committee and distribute the specified number of copies through the designated Staff Representative. At the meeting, the City Project Manager will present the project program and previous recommendations, and the Consultant will present the preferred General Development Plan to the Design Review Committee for recommendations.

4.1.11 **Park and Recreation Board or Task Force Approval:** The City Project Manager will prepare the staff report to the Park and Recreation Board or Task Force and distribute the specified number of copies through the designated Staff Representative. The City Project Manager will present the project and draft/final environmental document to the Board or Task Force for approval. The Consultant will be available to provide a presentation of the preferred GDP, if requested by the Board or Task Force.

Note: The environmental document, if any, must be the Draft or Final version for Park and Recreation Board review.

Submittal: Final General Development Plan(s).
Draft/Final Environmental Document.

4.1.12 **Submittal of Final General Development to City Project Manager:** Consultant shall submit the final General Development Plan Package and Statement of Probable Cost to the City Project Manager.

Submittal: General Development Plan line drawing (not colored) in PDF format, to scale.
General Development Plan, colored, in PDF format, to scale.
General Development Plan line drawing in DXF format.
General Development Plan line drawing on 8-1/2 x 11 mylar.

4.2 **<u>CONSTRUCTION PLANS</u>**

4.2.1 **Preparation of Plans, Specifications and Cost Estimate:** The Consultant shall obtain the correct mylar title block from the City Project Manager. An electronic version in AutoCAD format is available from the Administrative Services Division of the Park and Recreation Department. The construction plans shall be prepared based on the approved GDP. Any modifications to the approved GDP design shall be approved by the Park and Recreation Department.

Submittal: Any modifications to the GDP design shall be submitted in writing.

4.2.2 **60% Plan Check Submittal to City Project Manager:** The Consultant shall submit the construction plans and preliminary cost estimate to the City Project Manager at 60% completion for an in-house City plan check. The City Project Manager shall review the 60% submittal and forward redlined plans to the Park and Recreation Department for comment. Where buildings are in the scope of work, plans shall also be distributed to the Facilities Maintenance Division of the General Services Department. Plan check comments will be sent to the Consultant within 30 days of receiving the plans. Consultant shall incorporate comments into the plans.

Submittal: 60% Construction Plans and preliminary cost estimate.

4.2.3 **90% Plan Check Submittal for Permits and Revisions:** The Consultant shall submit the construction plans, specifications and cost estimate to the City Project Manager at 90% completion. These plans shall be considered substantially complete, with only plan check comments resultant from the 90% review to be addressed. The Consultant shall also submit the 90% construction plans to the Development Services Department for any required building or engineering permits. Specification formatting shall follow the Engineering and Capital Projects Department's Project Implementation and Technical Services Division requirements. The City Project Manager shall review plans and specifications for conformance to the General Development Plan and this Consultant's Guide, and submit plans and specifications to Contract Services for City-wide Plan Check distribution. The Park and Recreation Department shall be included in the City-wide Plan Check Distribution. The Consultant shall process all plan check corrections.

Submittal: 90% Construction Plans and Specifications and Final Cost Estimate.

4.2.4 **100% Submittal:** The Consultant shall submit the 100% plans, specifications and cost estimate to the City Project Manager for final approval. The City Project Manager shall verify all revisions have been made, and review the final plans with the Park and Recreation Department. If all revisions have been made to the satisfaction of the City Project Manager and the Park and Recreation Department, the City Project Manager shall submit the 100% plans and specifications for public bid.

Submittal: 100% Construction Plans and Specifications.

4.2.5 **Plans Approved and Submitted to City Records:** Consultant shall coordinate with the City Project Manager, submittal of original mylars to the City Maps and Records Section.

Submittal: Original Mylars.

4.3 **<u>AS-BUILT PLANS</u>**

4.3.1 **As-Built Plan Requirement:** Each Design Consultant shall be responsible for coordinating the completion of the as-built plans. The Design Consultant shall specify in the plans that the Contractor shall maintain a blueprint set of plans, with as-built information noted in red ink, on the site at all times during construction, and shall update information weekly.

4.3.2 **Redline Set of As-Builts Submittal to City Project Manager:** Upon the completion of construction and prior to the start of the Plant Establishment Period, the Contractor shall provide a redline set of as-built drawings to the Resident Engineer for review and approval. The redline set shall clearly reflect the actual locations of all above-ground and below-ground improvements. Buildings and equipment such as valves

and backflow preventers shall be referenced and dimensioned from two fixed points on the site to triangulate their location to the nearest six inches. The redline set shall also reflect any modification of equipment/products used that differ from the legends on the plans. Addresses for utility meters (water, gas, electrical) shall be correctly indicated on the redline set.

Submittal: Red line set of as-built drawings.

4.3.3 **Transfer of As-Built Information onto Digital Originals:** After the redline set of as-built drawings have been approved by the City Project Manager, the Consultant shall revise the original mylar drawings in accordance with the redline set. The Consultant shall be responsible for the accuracy of the completed as-built plans.

Submittal: Red line set of as-builts.

4.3.4 **Certification of the Final As-Builts:** The original Architect, Engineer or Landscape Architect of record shall make the as-built corrections and sign the sheets. The mylars with the as-built information shall be re-submitted to City Maps and Records for recording. As-built drawings shall be completed prior to the end of the maintenance period so that two sets of drawings can be provided to the Park & Recreation Department at the time the project is accepted by the City of San Diego.

Submittal: Signed original mylars with approved "as-built" information.
PDF of Final As-Built Drawings (to Park and Recreation)

APPENDICES

Consultant's Guide to Park Design & Development

Appendix A	<u>Park and Recreation Board Policies:</u> No. 1001: Naming of Parks and Recreation Facilities No. 1011: Graphic Presentations for the Park and Recreation Board and Committees No. 1302: Park Signs and Recognition Media in Community, Neighborhood, and Open Space Parks
Appendix B	<u>Council Policies:</u> No. 200-14: Landscape Design for Park and Recreation Facilities No. 600-33: Community Input and Notification for City-Wide Park Development Projects No. 900-14: Sustainable Building Policy
Appendix C	Reference Documents
Appendix D	Sample Irrigation Legend
Appendix E	Approved Manufacturers and Products List
Appendix F	Crime Prevention through Environmental Design
Appendix G	Standards and Specifications Guidelines from Facilities Division
Appendix H	<u>Standard Park Details:</u> A: Multi-Purpose Courts B: Tennis Courts C: Multi-Purpose Fields D: Tot Lots
Appendix I	Disapproved Play Equipment
Appendix J	Joint Use Checklist
Appendix K	Trail Policies and Standards
Appendix L	Policy on Avoiding Use of Non-Native Invasive Plants in Park and Recreation Department Projects
Appendix M	General Development Plan Border
Appendix N	Sample General Development Plan

THE CITY OF SAN DIEGO • STATE OF CALIFORNIA •
SEMPER VIGILANS

PARK AND RECREATION BOARD POLICY NO. 1001

SUBJECT: Naming of Parks and Recreation Facilities

BACKGROUND: The public sometimes suggests that parks and recreation facilities be named after persons, living or dead.

PURPOSE: To provide a systematic procedure for the naming of parks and recreation facilities, which will assist in their location by the citizenry, and to develop a method for the retention of names of historical or fiscal significance.

POLICY: As a general policy, parks and recreation facilities should be named to identify their locations. The name of the community area, the names of nearby geographic features, the names of adjacent schools and street names should be given first consideration. However, they may also be named for individuals, living or dead, who are of historical significance to the local area or who have made major financial contributions in the opinion of the appropriate recreation councils and/or other advisory bodies, Board committees and the full Board.

SUBSTANTIATION: Park and Recreation Board Minutes of 6/16/83 (page 2469).

PARK AND RECREATION BOARD POLICY NO. 1011

SUBJECT: Graphic Presentations for the Park and Recreation Board and Committees

BACKGROUND: Graphic presentations showing preliminary designs of parks, park improvements, park related structures and facilities are regularly submitted for review and approval by the Board and its sub-committees. These graphic presentations are often the only occasion on which the Board will review and recommend approval of a project.

PURPOSE: The purpose of this policy is to establish a minimum graphic standard for use by architects, landscape architects, other consultants and staff for presentation to the Park and Recreation Board and Committees.

POLICY:

1. Presentations shall be as clear and simple as possible while still describing the total scope of the project.

2. Presentations shall be of sufficient scale and size to be easily viewed from fifteen to twenty feet away.

3. Presentation drawings shall be mounted on minimum sized 30 inch by 40 inch boards. Loose or rolled drawings are not acceptable.

4. Presentation drawings will include but not be limited to the following (as applicable):

    a. A location map.

    b. A topographic or grading plan which clearly indicates existing and proposed contours.

    c. A development plan clearly indicating on-site facilities including buildings, parking areas, play areas, lighting, landscape materials, drainage, and utilities. This plan should be in color. Critical dimensions should be included.

    d. Building presentations will include floor plan, all elevations to clearly describe the structure. The drawings shall be colored. A perspective drawing may be submitted at the Consultant's option.

5. Photographs of the site and the surrounding areas, if required to define unusual topography or features, are recommended.

6. All presentation drawings indicating site or general development plan shall have the north arrow pointing up.

7. Slide presentations will be permitted along with the above items at the Consultant's option.

8. A board with samples of actual proposed exterior materials to show true exterior colors and textures is required for building presentations.

9. A rendering of a facility may be present in lieu of elevations at the Consultant's option.

10. The basic purpose of the graphics is to describe and support a particular construction or planning project, rather than to sell or impress.

SUBSTANTIATION: Park and Recreation Board Minutes of December 21, 1976

Facilities Committee Report

PARK AND RECREATION BOARD POLICY NO. 1302

No. 1302
Revised 11/15/01

SUBJECT: Park Signs and Recognition Media in Community, Neighborhood, and Open Space Parks

PURPOSE: To establish a policy and guidelines regulating design, placement and information on signs and other forms of media allowed in community, neighborhood and open space parks in order to achieve a unifying theme for signs in City of San Diego parks which strikes a balance between aesthetics and public information

BACKGROUND: On December 21, 1989, the Park and Recreation Board recommended that a policy be developed governing approval of signs within City parks. On February 10, 1993, the City Council approved the City Ventures pilot program which is aimed at encouraging sponsorship of park facilities and programs. The City Council also agreed that thanking sponsors through sign recognition or other forms of media placed at the site would be appropriate.

POLICY: It shall be the policy of the Park and Recreation Board to provide oversight for the number, wording, appearance, and size of signs and other types of media allowed in neighborhood, community and open space parks.

For open space parks, signage shall follow this policy unless, upon recommendation from an open space park task force or other appropriate body, City Council directs otherwise.

Signage which is significantly different from typical park signage due to format, size, or materials, shall be reviewed by the Design Review Committee to conform to standards within this policy. This includes informational and directional signs, permanent signs (Section A below), temporary signs (Section B below), and sponsorship recognition signs (Section C below). Deviations from said policy must be reviewed and approved by the Park and Recreation Board and the City Council.

A. Permanent Signs – defined as a sign installed on year-round basis.

1. Identification Signs – All parks should have at least one permanently installed identification sign.

a. Permanent identification sign(s) should be included in all new park construction plans. Existing parks which do not have identification sign(s) should systematically be retrofitted with permanent signs as funding becomes available.

b. Permanent identification signs for population-based park shall be monument-style and constructed of durable materials, preferably concrete, no larger than fourteen (14) feet wide and four (4) feet high.

   Signs should include: the name of the park; the words "The City of San Diego, Park and Recreation Department"; the City logo and the Department's logo. Lettering on signs should be recessed. Raised or applied letters are not recommended because of vandalism and maintenance concerns.

c. Signs should be located at major entrance(s) to each park, or within a major traffic area to ensure maximum public visibility.

d. No advertising shall be permitted on the main body of the sign. However, signs informing the public of permanent park users, such as tennis clubs and senior citizen centers, may be allowed and attached to the main sign, if such affixing can be accommodated without detracting from the primary signage. Commercial advertising shall not be permitted.

2. Facility Operator Signs – Signs permitted for permanent installation may also be granted to organizations which have been issued special agreements to operate facility in City parks on a year-round basis. Examples of such facilities are golf courses, tennis courts, snack bars and senior citizen centers. These permanent signs shall be constructed and installed in a manner that ensures public safety and shall conform to the following guidelines

a. Size of signs shall be appropriately sized to the purpose and under no circumstances shall exceed twenty-five (25) square feet.

b. Signs shall be installed on buildings operated by organizations. Placement of information or directional signs may be approved at other locations within the park as may be appropriate.

c. Wording on signs shall not infer ownership of public facilities and shall include a statement identifying the facility as “public property”.

d. Sign color and lettering should be limited to earthtones or to colors which conform to existing park signage.

e. Placement of any and all signs shall be determined by the Park and Recreation Director or his/her designee.

f. Signs shall be well maintained by the organization. Graffiti or defacement shall be corrected within seven (7) days of the occurrence. The operator shall be responsible for removal of the sign at termination of the organization’s agreement with the City.

g. Electrical signs shall not be permitted.

B. Temporary Signs – Are defined as those of short duration, limited to three months or less, as determined by the length of activity or event.

It shall be the policy of the Park and Recreation Board to allow temporary signage to groups or organizations which wish to notify the public concerning an event or activity which will be or is being held on park grounds.

1. Temporary signs shall be allowed under the following conditions:

    a. A Sign Permit issued by the Park and Recreation Department has been approved.

    b. Signs are of professional quality. Sign material shall be of durable materials consistent with the length of time the sign will be posted.

    c. Signs will be sized appropriately for purpose and under no circumstances shall exceed a size of twenty-five (25) square feet.

    d. Permittee shall be responsible for the installation, maintenance and removal of the sign.

    e. Advertising shall be allowed, but shall not exceed twenty-five percent (25%) of the sign's total square footage. Any product advertising shall be approved by the Park and Recreation Director or his/her designee.

    f. Advertising inflatables or advertising forms not covered in this policy shall be reviewed and approved by the Park and Recreation Board and its committees.

C. Sponsorship Recognition – Defined as a sign or other type of media recognizing a sponsor of a Park and Recreation facility or program. Sign/media shall be limited to the duration of sponsorship agreement.

1. Sponsorship recognition shall be allowed under the following conditions:

    a. The form and duration of recognition has been approved by the Department Director of his/her designee.

b. Media form is of professional quality and shall be of durable materials consistent with the length of time the sign will be posted.

c. Media form shall be sized appropriately for purpose and under no circumstances shall exceed a size of twenty-five (25) square feet.

d. The cost of installing, maintaining and removing the media shall be included in the sponsorship agreement.

e. Identification of sponsor shall comprise no more than 20% of sign/media and will be limited to name and logo only.

f. Forms of recognition not covered in this policy shall be reviewed and approved by the Park and Recreation Board and its committees.

SUBSTANTIATION: Park and Recreation Board Minutes of December 21, 2989, Item No. 201 (page 3055).

Park and Recreation Board Minutes of May 17, 1990, Item No. 203 (page 3081).

City Manager Report 93-37 of February 3, 1993.

Park and Recreation Board Minutes of 11/15/01 (page 4).

CITY OF SAN DIEGO, CALIFORNIA

COUNCIL POLICY

SUBJECT: PARK AND RECREATION FACILITY LANDSCAPE DESIGN
POLICY NO.: 200-14
EFFECTIVE DATE: August 24, 1981

BACKGROUND:

The City of San Diego has a large number of landscaped park and recreation facilities, and additional facilities will be required to serve the City's increasing population. The cost of development and maintenance of these facilities continues to rise while there is a concurrent reduction in financing available for this purpose. There is also an increased awareness of the need to promote user safety in these facilities and to conserve diminishing water and energy resources. This Council Policy provides direction for the design, or redesign, of landscaped areas which will meet community needs within the limits of available resources.

PURPOSE:

To provide policy guidance to City staff and design consultants relative to the landscape design of general park and recreation facilities.

POLICY:

It is the policy of the City Council that landscaping for new facilities, and the improvement or redevelopment of existing facilities, be designed in a manner that will assure user safety and facility function, reduce water and energy use, and reduce construction and maintenance costs through conformance with the following guidelines.

DESIGN GUIDELINES:

I. Landscaping - General

   a. High maintenance, water demanding landscaping will be limited to those areas where such improvement is essential.

   b. Each facility should be designed to retain significant existing native or naturalized plant growth, if any, consistent with intended use of the facility and the other requirements of this policy.

II. Visual Access

   a. Site grading, the location of park furnishings, structures and plantings must permit adequate visual access into the entire site from an adjacent public thoroughfare, building or parking lot.

CITY OF SAN DIEGO, CALIFORNIA

COUNCIL POLICY

III. Grading - Drainage

a. Site grading shall be accomplished in such a manner as to reduce steep grades and/or eliminate unnecessary grade changes.

b. Adequate drainage must be provided particularly for active use areas.

IV. Irrigation Systems

a. Irrigation systems will be automated and designed to apply water at a rate which will minimize runoff.

b. Irrigation systems for non-turfed, but planted areas, will be operated by a controller that is independent from units that control turf area irrigation.

c. The most effective and readily available vandal/theft resistant components will be utilized.

V. Lighting

a. Area and parking lot lighting will be provided where ambient light from adjacent areas is inadequate for user safety and convenience.

b. Lighting for athletic areas will be provided at a minimum level consistent with user safety and intended use.

c. Energy efficient fixtures will be utilized.

d. Automatic controls, with convenient manual override, will be provided.

e. Athletic area lighting will be operated by controls which do not operate other lighting systems.

VI. Furnishings and Fixtures

a. Avoid the use of “custom” designed park furnishings and fixtures, i.e., picnic facilities, benches, drinking fountains, lighting fixtures, play and athletic equipment, etc., except in unique and special situations.

b. Avoid the use of wooden bollards, fences, barricades, walls, play equipment and other “timber” structures.

c. The use of vandal resistant materials and installation methods are required.

d. Park furnishings located in turf shall be limited in number and so spaced as to permit the effective us of mechanized maintenance equipment and the effective operation of the irrigation system.

CITY OF SAN DIEGO, CALIFORNIA

COUNCIL POLICY

e. Park structures, fixtures and furnishings located in turfed areas will be provided with a concrete pad or footing flush with the adjacent turf and sufficiently wide to permit efficient turf maintenance.

f. Locate children's play apparatus in informal groupings in non-turfed areas. Avoid the use of formalized enclosures and a sand base. Limit apparatus to basic equipment such as slides, swings and climbers.

VII. Native/Naturalized Plantings

a. The restoration of natural areas disturbed by site development with native or naturalized plantings, in a manner which will require minimal maintenance, including irrigation, is encouraged, if consistent with the intended use of the facility and the other requirements of this policy.

b. Plant material will be selected that will provide a "natural" succession of plants designed to provide initial surface stabilization followed by a permanent, long lived plant community.

VIII. Turf

a. Turf plantings will be generally limited to areas where required for functional use.

b. Turf areas should be of a size and configuration to permit the most effective use of mechanized maintenance equipment and reduce turf edging.

c. Turf areas should terminate at the inside edge of perimeter walks wherever possible.

d. Concrete mowing strips are required at the interface of turf area with shrub or groundcover plantings.

e. Athletic fields will be turfed only if they are multi-sports fields. Single use baseball fields and softball fields will not be turfed. Baseball infields will not be turfed.

IX. Trees and Shrubs

a. Plant selection shall be limited to those species which are considered to be relatively disease and pest free, and require minimal trimming to be maintained in a safe and attractive condition.

b. Drought tolerant species should be utilized where practical, particularly in non-turfed areas.

c. Planting locations and spacing will permit normal plant development without undue crowding or trimming. Plant symbols on drawings and general development plans will be in scale with the mature size of the species proposed.

CITY OF SAN DIEGO, CALIFORNIA

COUNCIL POLICY

d. Trees planted in turfed areas will be spaced to permit the most effective use of mechanized maintenance equipment and operation of the irrigation system.

e. Dense tree groves should be excluded from turfed areas. Where planted, the soil surface under such groves must be mulched with a wood chip product or equal.

f. Shrub plantings will not be permitted except where required, i.e., for safety, and to screen objectionable views.

g. Foundation planting of park and recreation buildings is prohibited, except in unique design situations.

X. Groundcover

a. Living groundcovers will be permitted only where absolutely necessary to control surface erosion.

b. Plant selection must be limited to low maintenance species.

c. Drought tolerant species should be utilized where practical.

XI. Non-Planted Areas

a. Non-planted areas must be covered with mulch, wood chip product, decomposed granite or other material suitable for the intended use of the area.

IMPLEMENTATION:

I. Landscape design will conform to the guidelines listed above.

II. General development plans for the landscaping of new facilities, or significant redevelopment of existing facilities, will be approved by the Park and Recreation Board, its appropriate subcommittees and the Public Facilities and Recreation Committee of the City Council prior to the preparation of construction documents or implementation of City force landscaping projects. The Police Department will advise the Park and Recreation Department staff relative to the public safety aspects of the proposed design.

III. It is understood that deviation from specific sections of the guidelines due to special site conditions and/or use considerations may be required. However, such deviations must be fully justified and approved at the time of general plan approval.

IV. Staff will assure that detailed construction documents are prepared in a manner consistent with this policy and the approved general plan.

CITY OF SAN DIEGO, CALIFORNIA

COUNCIL POLICY

CROSS REFERENCE:

City Charter Sec. 55
Municipal Code Sec. 63.01
Council Policy 200-05

HISTORY:

Adopted by Resolution R-254869 08/24/1981

CITY OF SAN DIEGO, CALIFORNIA

COUNCIL POLICY

SUBJECT: COMMUNITY NOTIFICATION AND INPUT FOR CITY-WIDE PARK DEVELOPMENT PROJECTS
POLICY NO.: 600-33
EFFECTIVE DATE: September 29, 2003

BACKGROUND:

The community review process has been generally successful in gathering input on park development projects. However, this process has become very time-consuming, and staff intensive, resulting in unnecessary impacts on project funding and timelines.

PURPOSE:

The purpose for this policy is to assure that community members have adequate advance notification and opportunity to participate in the design phase of park development projects. It is intended that the process be administratively efficient, structurally predictable, and result in timely community input.

POLICY:

Community Notification: This process is designed to achieve early notification of community members to allow for timely input on park development projects.

In preparation for the community input phase of the project, the project manager will develop a project notification bulletin. This bulletin will include the project location, the proposed scope of work, the goals for the upcoming meeting, time and location of meeting, contact information regarding questions, information regarding posting of the staff report at the community recreation center or park kiosk and any available web site information relevant to the project.

The project manager will also prepare a staff report. This will include additional project information regarding the community concerns and issues, funding limitations and any additional relevant information.

The project manager will notice the officially-recognized recreation council or open space citizen's advisory committee prior to the first community meeting through the following steps:

1. Project manager will notice the staff representative and each member of the officially recognized recreation council or open space citizen's advisory committee with the project bulletin and staff report.

2. Project manager will notice the appropriate City Council office(s) with the project bulletin and staff report.

CITY OF SAN DIEGO, CALIFORNIA

COUNCIL POLICY

3. Project manager to notice the officially-recognized recreation council or open space citizen's advisory committee with a project bulletin and staff report which will be posted.

4. Project manager will notice the staff representative to the City-recognized local community planning board/group and each community planning board/council member with the project bulletin inviting them to attend the community meeting.

5. Prior to the first community meeting, the project manager will contact the appropriate council office(s) staff representative(s) to seek names of community members who have expressed interest in the proposed project or site. Project manager will notice these community members with the project bulletin.

6. Project manager will coordinate the creation and posting of a sign or community notice at the subject park site identifying the upcoming community meeting and contact information.

7. Project manager will notice surrounding park neighbors within a minimum 300' radius of the park or project site for projects that will be significantly increasing the number of users at the site, for example, a new community or neighborhood park, new joint use areas, visitor center or new lights at an existing site.

For additional notification, the project manager will discuss the next steps for the approval for the project at each community meeting and compile a list of community members who have expressed interest in the project. Based on this list the project manager will contact community members regarding additional community meetings during the design approval process.

Community Input Process: Community meetings should efficiently utilize community members', staff and consultants' time. The meetings should be well organized with a clear purpose. The officially-recognized recreation council or open space citizen's advisory committee will be the sponsor for local community input. Park development projects should be presented to the local community two times receiving a recommendation from the officially-recognized recreation council or open space citizen's advisory committee at the second meeting. The input process should include the following steps:

1. In preparation for the first meeting, the project manager will prepare project information that outlines the roles for the design team and community members, the anticipated scope of work, the project budget and funding sources, and projected time schedule. With this information, the officially-recognized recreation council or open space citizen's advisory committee

provides input regarding the development of a preferred project program, as well as a community priority ranking of the proposed program elements. This information will give the design team clear direction regarding community desires and will be used to develop conceptual alternatives that maintain community priorities and the project budget.

2. These conceptual alternatives are presented to the officially-recognized recreation council or open space citizen's advisory committee and community at the second meeting. At this second meeting, the community will have an opportunity to review and comment on the proposed alternative plans. Community members will be allowed to: a) recommend individual elements from the conceptual alternatives to be synthesized into a preferred alternative plan, or b) endorse the presented conceptual plan that best meets the outlined project program and priorities identified by the community. Complex projects, such as new community parks or the design for a new recreation center may require an additional meeting with the officially-recognized recreation council or open space citizen's advisory committee. Cost estimates and schedules will be based on the process outlined in this policy. Any additional meeting(s) beyond those outlined will impact the project by increasing the project timeline and reducing the funding available for construction.

3. Following a recommendation from the officially-recognized recreation council or open space citizen's advisory committee, the design team will incorporate the proposed revisions and prepare a preferred project plan for review and recommendation by the appropriate review committees and boards. Each of these committee and board meetings are public meetings and they provide additional opportunities for community input. These additional review committees could include:

   a. SCRAB- Sub-Committee for the Removal of Access Barriers
   b. FARB – Facilities Access Review Board
   c. Park and Recreation Board – Area Committees
   d. Park and Recreation Board – Design Review Committees
   e. HRB – Historical Resources Board design assistance sub-committee
   f. HRB – Historical Resources Board

   It is intended that each of these committees and boards will require one meeting, assuming all applicable project information is accurately compiled and presented in accordance with Park and Recreation Board Policy No. 1011 and submittal standards established in the *Consultants Guide to Park Development.* Each of these committees and boards will make a recommendation on the

CITY OF SAN DIEGO, CALIFORNIA

COUNCIL POLICY

proposed project, with or without conditions, to the subsequent committees or boards. Any conditions of approval will be incorporated into the proposed project, as appropriate, and forwarded to the appropriate decision-making body for approval.

The Park and Recreation Board is a publicly-noticed meeting and is provides an opportunity for additional community input. In most cases, the Park and Recreation Board will make the final decision on park development projects. In some communities, final approval may be required by other decision-makers depending upon jurisdiction, such as the City Council and/or Coastal Commission, etc.

HISTORY:

Adopted by Resolution R-298444 09/29/2003

CITY OF SAN DIEGO, CALIFORNIA

COUNCIL POLICY

SUBJECT: SUSTAINABLE BUILDING POLICY
POLICY NO.: 900-14
EFFECTIVE DATE: May 18, 2010

BACKGROUND:

The passage of the California Global Warming Solutions Act of 2006 (Assembly Bill 32) and other pivotal legislation and policy in California - such as the establishment of statewide energy efficiency goals (AB 2021), Low-Income Energy Efficiency statutes, the Governor's Green Building Executive Order, the California Energy Commission Integrated Energy Policy Report (2007), and the CA Public Utilities Commission (CPUC) Strategic Plan (2008) - create an environment where energy efficiency efforts must not only continue to thrive but scale up at unprecedented levels. The four specific programmatic goals, known as the "Big Bold Energy Efficiency Strategies," established by the CPUC include:

1. All new residential construction in California will be zero net energy by 2020;

2. All new commercial construction in California will be zero net energy by 2030;

3. Heating, Ventilation and Air Conditioning (HVAC) will be transformed to ensure that its energy performance is optimal for California's climate; and

4. All eligible low-income customers will be given the opportunity to participate in the low income energy.

The 2003 update of 900-14 requires City projects to achieve the U.S. Green Building Council's LEED silver standard for all new buildings and major renovations over 5,000 square feet. The City of San Diego General Plan (2008) and the City of San Diego Climate Protection Action Plan (2004) formalizes the commitment to increase energy efficiency and the use of renewable energy. In order to achieve the goals in the CPUC Strategic Plan and the City's General Plan, more substantial requirements are needed as a bridge to zero net energy in 2020 (residential) and 2030 (commercial). To that end, the Sustainable Building Policy will be updated every three years to remain current with new State and Federal guidelines and local needs.

PURPOSE:

The purpose of this policy is to reassert the City's commitment to green and sustainable building practices, and applies to new construction or major renovations that the City owns, occupies or leases. A major renovation is defined as an alteration or renovation to existing conditioned spaces that are 5,000 gross square feet or larger in area and require at least two energy building system changes. The site boundary for the scope of this Policy is the contract limit line of the work included in the Major Renovation project. (See Definitions, page 5-6) The

CITY OF SAN DIEGO, CALIFORNIA

COUNCIL POLICY

Sustainable Buildings Policy shall recognize projects that are designed, constructed and operated using cost-effective innovative strategies and technologies that seek to achieve the following:

1. Avoid permanent adverse impact on the natural state of the air, land and water;

2. Ensure a healthful indoor environmental quality;

3. Optimize social and economic benefits to the project and the community; and

4. Encourage occupant behavior, maintenance and operations that maximize conservation opportunities, reduce resource consumption and minimize wastes.

Fiscal analysis using life cycle cost estimating is part of a "reasonable payback" determination for energy efficiency and renewable energy technology. Approved life-cycle cost estimating measures to be used include first-cost, incentives, operating expenses, and utility savings for proposed technology. This policy shall implement renewable energy strategies that provide a payback of less than 10 years.

STANDARDS:

1. City owned, occupied or leased new construction and major renovation projects shall meet the requirements of the US Green Building Council (USGBC) Leadership in Energy and Environmental Design Program® (LEED®) for Silver level certification.

2. City owned, occupied or leased new construction and major renovation projects shall use 15 percent less total building energy consumption than the minimally code compliant building as modeled following the Title 24 requirements. *Energy Pro* software is the preferred software tool to identify efficiency.

3. City owned new construction and major renovation projects shall provide a minimum of 15 percent of total building energy from onsite self-generation using proven renewable energy technologies when site conditions and configuration allow for reasonable payback on the significant investment in renewable energy technologies.

4. City owned, occupied or leased new construction and facilities replacing plumbing fixtures shall use 20 percent less water than the baseline water consumption profile for interior non-process water uses.

5. City owned, occupied or leased facilities shall use non- potable water for permanent irrigation to the extent possible.

CITY OF SAN DIEGO, CALIFORNIA

COUNCIL POLICY

6. City owned, occupied or leased facilities shall comply with all stormwater development requirements in the Storm Water Management and Discharge Control Ordinance and the San Diego Municipal Code Land Development Manual Storm Water Standards for all projects.

7. City owned, occupied or leased new construction or major renovation facilities shall comply with all elements of the Construction and Demolition Ordinance.

8. City owned, occupied or leased facilities shall comply with all elements of the City Recycling Ordinance, and occupant recycling should include paper, corrugated cardboard, glass, plastic and metals at a minimum.

9. Cooling, refrigeration, or fire suppression equipment in new buildings or replacement of equipment in City owned, occupied or leased facilities shall not use CFC-based products.

10. The following sustainable building measures are strongly encouraged for City owned, occupied or leased new construction and major renovation:

    a. Incorporate enhanced commissioning and measurement and verification procedures for all facilities.

    b. Improve indoor air quality by reducing contaminants from all occupied spaces by using low-emitting volatile organic materials, including adhesives, paints, coatings carpet systems, composite wood and agrifiber products.

    c. Limit disruption of natural water flows and minimize storm water runoff by minimizing building footprints and other impervious areas, increasing on-site infiltration, preserving and/or restoring natural drainage systems, and reducing contaminates introduced into San Diego's rivers, bays, beaches and the ocean.

    d. Incorporate building products that have recycled content reducing the impacts resulting from the extraction of new materials. Newly constructed City facilities shall strive to have a minimum of 25% of building materials that contain in aggregate, a minimum weighted average of 20% post consumer recycled content materials.

    e. Prioritize the use and purchase of products that are manufactured, extracted, and assembled within the City of San Diego.

    f. Reduce the use and depletion of finite raw and long-cycle renewable materials by replacing them with rapidly renewable materials. Newly constructed City facilities should consider incorporating rapidly renewable building materials for 5% of the total building materials.

CITY OF SAN DIEGO, CALIFORNIA

COUNCIL POLICY

g. Establish minimum indoor air quality (IAQ) performance to prevent the development of indoor air quality problems in buildings, maintaining the health and well being of the occupants. Newly constructed City facilities must show compliance with Federal and California IAQ standards by conforming to the latest published version of ASHRAE 62, Ventilation for Acceptable Indoor Air Quality standard.

h. Design and build to take maximum advantage of passive and natural sources of heat, cooling, ventilation and light.

i. Provide sustainable lighting systems that use 5000 Kelvin lamps in conjunction with high efficiency program start ballasts integrated with occupancy sensors and day lighting systems. All lighting must exceed a Color Rendering Index of 80 CRI.

j. Outdoor lighting systems shall comply with local ordinances and utilize broad spectrum lighting.

k. Buildings must use energy management systems that can be automatically accessed for demand response calls with the local utility.

IMPLEMENTATION:

1. All City departments shall be responsible for understanding the requirements for new construction and major renovations, and shall comply with the mandatory standards of the Sustainable Building Policy and seek to include as many voluntary measures as possible.

2. Engineering and Capital Projects Department, Development Services Department, and Environmental Services Department shall ensure, to the extent of their responsibility, that construction plans and implementation meet the mandatory standards.

3. The City will seek cooperation with other governmental agencies, public interest organizations, and the private sector to promote, facilitate, and implement sustainable building, energy efficiency, and renewable generation in the community.

4. This Policy shall be reviewed and updated at least every three years to align with applicable codes, standards and technologies.

LEGISLATION:

The City supports State and Federal legislation that promotes or allows sustainable development, conservation of natural resources, energy efficiency, and renewable technology.

CITY OF SAN DIEGO, CALIFORNIA

COUNCIL POLICY

Definitions Used In This Policy:

Build It Green: Build It Green (BIG) is a professional non-profit membership organization whose mission is to promote healthy, energy- and resource-efficient buildings in California. Supported by a solid foundation of outreach and education, Build It Green connects consumers and building professionals with the tools and technical expertise they need to build quality green homes. (Definition source: Build It Green).

Baseline Water Consumption Profile: Baseline water consumption profile represents the average State of California water usage for commercial and residential buildings, as provided by the Department of Water Resources.

Conditioned Space: Part of a building where temperatures are controlled through heating or cooling.

Energy Consumption, Total Building: Total Building Energy Consumption is used for calculating a building's annual energy use as specified in the Alternative Calculation Methods Manuals for Title 24 compliance and is equivalent to the Energy Budget that is the maximum amount of Time Dependent Valuation (TDV) energy that a proposed building, or portion of a building, can be designed to consume. (Definition source: Title 24).

Expedite: The permit will be reviewed by appropriate City staff in 75% of the standard time it takes for permit review.

GreenPoint Rated: GreenPoint Rated is a third party rating system for homes and multifamily buildings based on a set of green building measures pulled from the Green Building Guidelines developed by Build It Green and used to evaluate a residence's environmental performance. (Definition source: Build It Green).

LEED: The LEED (Leadership in Energy and Environmental Design) Green Building Rating System is a voluntary, consensus-based national standard for developing high performance, sustainable buildings. Members of the U.S. Green Building Council, representing all segments of the building industry, developed LEED and continue to contribute to its evolution using their guiding principles that provide the clarity and continuity, while also giving the system the flexibility to grow and respond to a rapidly changing market. (Definition source: USGBC).

CITY OF SAN DIEGO, CALIFORNIA

COUNCIL POLICY

Major Renovation- City Owned, Occupied or Leased Buildings: Alterations or renovations to existing conditioned spaces that are 5,000 gross square feet or larger in area and require at least two energy building system changes. The site boundary for the scope of this Policy is the contract limit line of the work included in the Major Renovation project.

Major Renovation- Private Sector Residential and Commercial Buildings: Alterations or renovations to existing conditioned spaces in residential buildings with more than 1,500 gross square feet or larger and require at least two energy building system changes, **OR** commercial buildings with more than 5,000 gross square feet or larger and require at least two energy building system changes.

New Construction- City Owned, Occupied or Leased Buildings: New Construction includes newly constructed buildings that have never been used or occupied for any purpose. (Definition source: Title 24). For purposes of this policy, New Construction is expanded to mean projects that are 5,000 gross square feet or larger in area. The site boundary for the scope of this Policy is the contract limit line of the work included in the New Construction project.

New Construction- Private Sector Residential and Commercial Buildings: New Construction includes newly constructed buildings that have never been used or occupied for any purpose. (Definition source: Title 24). For purposes of this policy, New Construction is expanded to mean residential projects that are 3,000 gross square feet or larger in area **OR** commercial buildings that are 10,000 gross square feet or larger in area. The site boundary for the scope of this Policy is the contract limit line of the work included in the New Construction project.

Renewable Energy Technologies: Renewable energy potential technologies include solar, wind, geothermal, low-impact hydro, biomass, bio-gas technologies, and fuel cell technologies that do not use fossil fuels. (Definition source: USGBC). Other technologies that do not use refined fossil fuels may be considered on a project-by-project basis.

Reasonable Payback: Fiscal analysis using life cycle cost estimating is part of a "reasonable payback" determination for energy efficiency and renewable energy technology. Approved life-cycle cost estimating measures to be used include first-cost, incentives, operating expenses, and utility savings for proposed technology. This policy shall implement renewable energy strategies that provide a payback of less than 10 years.

CITY OF SAN DIEGO, CALIFORNIA

COUNCIL POLICY

Title 24: Title 24, Part 6, of the California Code of Regulations is the Energy Efficiency Standards for Residential and Nonresidential Buildings in California. Established in 1978 in response to a legislative mandate to reduce California's energy consumption, the standards are updated periodically (usually every three years, at minimum) to allow consideration and possible incorporation of new energy efficiency technologies and methods. Energy efficiency reduces energy costs for owners, increases reliability and availability of electricity for the State, improves building occupant comfort, and reduces environmental impact. (Definition source: California Energy Commission).

USGBC: The U.S. Green Building Council (USGBC) is a non-profit organization committed to expanding sustainable building practices. USGBC is composed of more than 15,000 organizations from across the building industry that are working to advance structures that are environmentally responsible, profitable, and healthy places to live and work. (Definition source: USGBC).

REFERENCES:

- Council Policy 400-11, Water Conservation Techniques
- Council Policy 400-12, Water Reclamation/Reuse
- Council Policy 600-17, Affordable/In-Fill Housing and Sustainable Buildings Expedite Program
- Council Policy 900-02, Energy Conservation and Management
- Council Policy 900-06, Solid Waste Recycling
- Ordinance Number O–19420 N.S., Construction and Demolition Debris Diversion Deposit Program, Ordinance Number O–19694 N.S
- General Plan Update (2008)
- Equal Opportunity Contracting, Municipal Code 18173, sections 22.2701- 22.2702
- Non-Discrimination in Contracting, Municipal Code 18173, sections 22.3501-22.3517

HISTORY:

Adopted by Resolution R-289457 - 11/18/1997
Amended by Resolution R-295074 - 06/19/2001
Amended by Resolution R-298000 - 05/20/2003
Amended by Resolution R-305833 - 05/18/2010

REFERENCE DOCUMENTS

Consultants shall use the most current edition of the following reference documents.

ADA: Americans with Disabilities Act of 1990.

ADAAG: Americans with Disabilities Act Accessibility Guidelines.

ASTM: American Society for Testing and Materials.

Cal Trans: Manual of Traffic Controls for Construction and Maintenance Work Zones, State of California Department of Transportation.

CPSC: U.S. Consumer Products Safety Commission, Handbook for Public Playground Safety, www.cpsc.gov.

Greenbook: Standard Specifications for Public Works Construction, commonly referred to as the Greenbook.

IES: Illuminating Engineering Society, Lighting Handbook Reference & Application, Chapter 21 - Sports and Recreational Area Lighting.

Municipal Code: City of San Diego Municipal Code.

Recycled Water Program: Rules and Regulations for Recycled Water Use and Distribution within the City of San Diego, City of San Diego Public Utilities Department.

Standard Drawings: City of San Diego Standard Drawings.

Title 24: Title 24 of the California Administrative Code, State of California Building Code and California State Accessibility Standards Interpretive Manual, Office of the State Architect.

Trails Handbook: Trails Handbook, State of California, Park and Recreation Department.

UBC: Uniform Building Code, California Building Code.

Whitebook: City of San Diego supplement amendments to the Greenbook.

APPENDIX D

SAMPLE IRRIGATION LEGEND					
SYMBOL	MANUFACTURER/MODEL/DESCRIPTION	PSI	RAD.	GPM	DETAIL
1	*CONSULTANT TO DESCRIBE TYPES OF HEADS*				I-1 TO I-3
2	*AND ASSIGN IDENTIFICATION NUMBERS.*				
3	*SPECIAL SYMBOLS MAY BE USED FOR DRIP*				
4	*AND OTHER SPECIAL HEADS WITH PRIOR*				
5	*APPROVAL BY THE PARK AND RECREATION*				
6	*DEPARTMENT.*				
W	WATER METER				WS-01/WS-02
	REDUCED PRESSURE BACKFLOW PREVENTER				WR-01/WR-02
Y	WYE STRAINER				I-14 (SIMILAR)
P	PRESSURE REGULATING VALVE				I-14 (SIMILAR)
MV	IRRIGATION MASTER VALVE (NORMALLY OPEN)				I-10
F	FLOW SENSOR (DETAIL PER MAN., CONCRETE VALVE BOX)				
	REMOTE CONTROL VALVE				I-14, I-33
	GATE VALVE (2" & SMALLER)(2.5" & LARGER, PROVIDE DETAIL)				I-13
	GLOBE VALVE				I-13, I-33
	QUICK COUPLING VALVE (1" SIZE)				I-5, I-33
	AUTOMATIC IRRIGATION CONTROLLER				I-17, I-18
	DIRECT BURIAL CONTROL WIRE (SOLID COPPER, COLOR CODED)				I-16
PB	PULL BOX (LOW VOLT.=LOCKING LID/HIGH VOLT.=BOLTDOWN LID)				I-15
	PVC MAIN LINE-CLASS 315 FOR 2" AND LARGER WITH SCH. 80 FITTINGS OR BELL SOLVENT WELD, SCH. 40 FOR 1-1/2" SIZE, 21" DEPTH				I-25, I-26
	PVC LATERAL LINE-SCH. 40, 3/4" MIN. SIZE, 15" DEPTH				I-25
G.I.	GALVANIZED IRON PIPE-SCH. 40				I-20 TO I-24
CU	TYPE "L" COPPER PIPE				I-25
P	POTABLE WATER LINE				
	PVC SCH. 40 SLEEVE, 2 X DIAMETER OF PIPE OR WIRE BUNDLE TO BE SLEEVED, MINIMUM 2" SIZE				
POC	POINT OF CONNECTION				

APPROVED MANUFACTURERS AND PRODUCTS LIST

This list is updated on a yearly basis. To obtain the current list contact Administrative Services, Park and Recreation Department, (619) 533-6597.

A. IRRIGATION MATERIALS

1. **Reduced Pressure Backflow Preventers** (assemblies shall include all necessary test cocks with full port ball valves)
   - Febco #825Y
   - Febco #825YA
   - Febco #880V Vertical
   - Wilkins #575 RP
   - Wilkins 975 XL
   - Hersey Beeco FRP-II
   - Watts 009 Series
   - Watts 909 Series

2. **Backflow Preventer Enclosures** (stainless steel, free of burs and sharp edges)
   - BPDI Coast Guard Shack CGS
   - Le Meur BF-SS
   - All-Spec BFESS, VBSS
   - Strong Box "Smooth Touch" SBBC-SS

3. **Irrigation Controllers**
   - Irritrol MC-E
   - Rain Bird ESP (MC Series) (12-24 Stations)
   - Rain Master Sentar II, Eagle, Eagle-I, Evolution
   - Cal Sense ET2000e
   - Toro Sentinel
   - Toro Battery Operated DDCWP (ONLY if power is not available)

4. **Irrigation Controller Enclosures** (stainless steel only, 14 gauge minimum)
   - All Spec AS-SS
   - La Max
   - Strong Box
   - Rain Man
   - Cal Sense SSE
   - Hydroscape Hydro-Safe Enclosure

5. **Pressure Reducing Valves** (pilot operated, stainless steel trim)

- CLA-VAL #90-01BS
- Wilkins 500/500HR series
- Wilkins 600/600HR series
- Watts 25 AUB Series

6. **Master Control Valves** (24 volt, electric, brass/bronze, normally open)
- Griswold 2160E
- Superior 3100
- Superior 3300DW-E

7. **Flow Sensing Devices**
- Badger Model IR-220P
- Calsense FM Series

8. **Isolation Valves**

<u>Globe Valves – 3 Inch and Smaller (bronze with bronze cross handle)</u>
- Champion #100
- Buckner #22000
- Nibco T-235Y

<u>Gate Valves – 3 Inch and Smaller (brass or bronze with bronze cross handle)</u>
- Nibco T-113-K Series
- Matco 513-T Series

<u>Gate Valves – 4 Inch and Larger (cast iron)</u>
- Clow
- Mueller #100-011
- I.O.W.A.

9. **Locking Cap for Isolation Valve Access Sleeves**
- Weathermatic 906L

10. **Remote Control Valves (24-volt electric, brass, normally closed)**
- Rain Bird EFB-CP Series
- Rain Bird EFB-CP-R Series (Reclaimed)
- Superior 950-DW with SD Option
- Griswold DWS
- Griswold DW-PRS Series

11. Quick Coupling Valves and Keys

Potable Irrigation Use
- Rain Bird #44-LRC
- Buckner #QB44LRC10

Keys for Potable Irrigation Use (single lug)
- Rain Bird #44K
- Buckner #QB44K10

Recycled Water Use (Acme threaded)
- Toro #100-ATLVC
- Nelson #7645

Keys for Recycled Water Use (Acme thread, single lug)
- Toro #100-AK
- Nelson #7641

12. Irrigation Boxes (concrete with cast iron locking lid)

- Brooks 3-HL
- San Diego Precast 3HL
- J & R 3HL

13. Irrigation Heads (all rotor heads to have stainless steel risers)

Turf Pop-Up Rotor Heads - Full Circle with 50-60 Foot Radius
- Hunter I-40 Ultra SS (with factory installed nozzles)
- Hunter I-40 Ultra SS ON (with factory installed nozzles)
- Rain Bird Falcon 6504

Turf Pop-Up Rotor Heads - Part Circle with 50-60 Foot Radius
- Hunter I-40 Ultra SS (with factory installed nozzles)
- Rain Bird Falcon 6504

Shrub & Turf Pop-Up Rotor Heads - Full Circle with 40-50 Foot Radius
- Hunter I-40 Ultra SS (with factory installed nozzles)
- Hunter I-40 Ultra SS ON (with factory installed nozzles)
- Hunter I-25 Ultra SS (with factory installed nozzles)
- Rain Bird Falcon 6504

Shrub & Turf Pop-Up Rotor Heads - Part Circle with 40-50 Foot Radius

- Hunter I-40 Ultra SS (with factory installed nozzles)
- Hunter I-40 Ultra SS ON (with factory installed nozzles)
- Hunter I-25 Ultra SS (with factory installed nozzles)
- Rain Bird Falcon 6504

Shrub & Turf Pop-Up Rotor Heads - Full Circle with 30-40 Foot Radius

- Hunter #I-20 Ultra SS (with factory installed nozzles)

Shrub & Turf Pop-Up Rotor Heads - Part Circle with 30-40 Foot Radius

- Hunter I-20 Ultra SS (with factory installed nozzles)

Shrub & Turf Pop-Up Rotor Heads - Full or Part Circle with 17-30 Foot Radius

- Hunter #I-20 Ultra SS Short Radius (with factory installed nozzles)

Shrub & Turf Pop-Up Spray Heads - Full or Part Circle with 8-30 Foot Radius

- Rain Bird 1800 SAM/1800 SAM PRS Body with Rain Bird Rotary Nozzles OR Hunter MP Rotator Nozzles
- Hunter MPR40-CV Body with MP Rotator Nozzles

Shrub Fixed Spray Heads - Full or Part Circle (separate check valve required)

- Rain Bird PA-8S Adapter
- Rain Bird PA-8S PRS (pressure regulating riser)
- Toro 570SR with 570S Adapter
- Hunter INST Institutional Series

Shrub & Turf Pop-Up Spray Heads - Full or Part Circle (integral check valve)

- Rain Bird 1800 SAM/1800 SAM PRS
- Toro #570Z
- Hunter INST-CV Institutional Series

Bubblers - Pressure Compensating Flood Type

- Rainbird #1400 Series
- Hunter PCN and PCB Series

14. Anti-Drain/Excess Flow Valves

- Valcon #ADV-XS, #ADV
- King Brother's KBI
- Hunter HCV

15. Pipe and Fittings (Cast iron fittings/ductile iron fittings for mainline - (AWWA-C110) short body/cement lined)

- Dayton Foundry
- Tyler Pipe and Foundry
- Leemco-Slant Bell Fittings

Cast Iron Joint Restraints

- Leemco

Polyvinyl Chloride Pipe (PVC)

- EPCO
- Pacific Plastic
- JM Eagle
- Apache
- Brownline (UV stabilized, above grade only)
- Alertline (Recycled Water)
- Waterwarn (Recycled Water)

Polyvinyl Chloride Pipe (PVC) Fittings:

- Dura
- Lasco
- Sloan
- Plastiline
- Spears

16. Trench Marker Tape

- Allen Marking Tape
- Paul Potter Warning Tape, Inc. 'Alarmatape'

17. Wire Connectors (epoxy filled)

- Pen-Tite (Epoxy Filled)
- Dri-Splice DS 100 with DS 300 Epoxy Sealant

18. Rain Shut-Off Switch

- Hunter – Mini Click with Sensor Guard Enclosure
- WCS Rainguard

B. SITE FURNITURE

1. Picnic Tables (Prefer separate tables and benches for replacement purposes and litter collecting & tripping)

- US Concrete Group
- Quick Crete
- Dura Art Stone
- Outdoor Creations, Inc.

2. Benches

- US Concrete Group
- Quick Crete
- Dura Art Stone
- Outdoor Creations, Inc.

3. Drinking Fountains

- Haws #3150 pedestal mounted concrete drinking fountain
- Haws #1108-14, 14 gauge stainless steel drinking fountain

4. Barbecues

- Little Tikes
- Burke
- Miracle

5. Ash Urns

- US Concrete Group
- Quick Crete
- Dura Art Stone
- Outdoor Creations, Inc.

6. Bicycle Racks

- Quick Crete
- Hanson
- Burke

7. Trash Receptacles and Ash Urns

- US Concrete Group
- Quick Crete
- Dura Art Stone
- Outdoor Creations, Inc.

C. MULTI-PURPOSE COURTS

1. Basketball Court Surfacing

- Sports Coat 'Play-On'
- California 'Plexi-Pave'

D. MULTI-PURPOSE FIELDS

1. Softball Bleachers

<u>3-seat Bleacher (no guardrails required):</u>

- Miracle
- LA Steelcraft

<u>5-seat Bleacher (with guardrails):</u>

- Miracle
- LA Steelcraft

E. PLAY EQUIPMENT

1. Play Area Surfacing

- Architect's Choice Kids Turf (engineered wood fiber)
- Fibar (engineered wood fiber)
- Playbound by Surface America (poured-in-place rubber surfacing)
- Playsafe (poured-in-place rubber surfacing)
- TotTurf by Robertson Industries (poured-in-place rubber surfacing)
- TotTurf Supreme by Robertson Industries (poured-in-place rubber surfacing)

2. Play Equipment

- Burke
- Columbia Cascade
- Gametime
- Little Tikes
- Landscape Structures
- Miracle Recreation Equipment Company

3. Physical Fitness Equipment

- Gametime
- Miracle
- Quality Industries, Inc.
- Landscape Structures, Inc.

4. Gymnasium Scoreboards

- Nevco L.E.D.

5. Climbing Rocks

- Boldr
- Landscape Structures, Inc.
- HUNA Designs
- Rockraft Designs

F. COMFORT STATIONS AND RECREATION CENTERS

1. Mission Bay Park Building Colors (All colors by Ameritone)

Wall and Trim Colors:

- Dove Gray #298d
- Atoll Gray #197E
- Larkspur #261D
- Bone White #2990-8J
- Feather Gray #297F
- Stone #195d
- Nougat #W44
- Mushroom #W14

Trim Colors:

- Hunter Green #181a
- Dutch Blue #262A
- Chocolate #191A
- Umber Brown #297A

2. Balboa Park Building Colors

- Frazee 'Travatan'C3Y16; 1Y12; L4Y28 (for 5 gallon formula)

3. Locks, Cylinders, and Cores

- Best 35H series - Mortise Locks
- Best 9K series - Cylindrical Locksets
- Best IE-64, 1-1/8 Inch Cylinder Lengths
- Best IE7 series - Cylinder
- Best IC7 series - Core

4. Exit Hardware Devices

- Sargent 80 series
- Precision Apex Series
- Dorma 9000 Series
- Von Duprin 99 Series

5. Closers

- Dorma 8900
- Norton 7500
- Sargent 143

6. Hinges

- Stanley
- McKinney
- Hager

7. Toilets, Urinals and Sinks

- DuraWare 2100-W-I-CN (Stainless Steel Toilets
- DuraWare 2167-W-I-FV-2898 (Stainless Steel Urinals)
- DuraWare 1953-I-CSG-9-GE, single hole (Stainless Steel Sink)
- Chicago 333-665 (Stainless Steel Faucet)

8. Toilet Paper Dispensers

- Aslin Industries

9. Interior Masonry Wall and Floor Sealant

- Desco Glazetite with ICBO approval

10. Electric Hand Dryer

- World Dryer Corporation, Model #RA505 (used with buildings that do not have
- a plumbing chase)
- Fastaire HP03 (used with buildings that do have a plumbing chase)
- Electric Hand Dryer/Semi-Flush ADA approved
- Fastaire #RA5E

11. Light Fixtures

<u>Interior Lights:</u>

- Lithonia LB232GEB
- Lithonia 2TLB232GEB - Recreation Buildings Only
- Lithonia 2GT332AGEB
- Halo #H274, trim #400
- Kenall, shorty forty, No. 8140 (recreation building restroom, wall mount)
- Kenall #282 (comfort stations)

<u>Interior/Exterior Lights:</u>

- Eclipse - CMK Series 2 - 13 watt
- Kenall #3714
- Kenall #3826 (comfort station ceiling mounted)

Interior Comfort Station:

- Kenall H1212C-13W TWIN -2-120
- Eclipse CMK series 2-26 watt

Exterior Security Lights:

- Kenall #S711D-C-DB-50W-1-120
- Kenall #KENALL MR 13E-SR-C-DB-50HPS-1-120
- Kenall #1212 26-Watt

12. Electric Wall Switches

- Hubbell 1221-G
- Bryant 4901-G
- P&S 5021-GX

13. Electric Duplex Receptacles

- Hubbell #5362 (20AMP), #5262 (15AMP)
- Bryant #5362 (20AMP, #5262 (15AMP)
- P&S #5362 (20AMP), #5262 (15AMP)

14. Electric Fuses

- Bussman (low peak)
- Gould (low peak)

15. Electric Generators and Fire Alarms

- Kohler Generator
- Edwards Fire Alarm
- Notify Fire Alarm
- Simplex Fire Alarm

16. Interior Atomic Exit Signs

- ISOLITE Model#2040-70 or 2040-95 Green Background 3/8 polycarbonate cover (20 Years Life)

17. Electric Time Clocks

- TORK 7200ZL (Astronomical Type) no substitutions.

18. Gymnasium Scoreboards and Lights

- Nevco - LED type Scoreboard with polycarbonite hinged cover over scoreboard
- HolopHane 400 watt MH cordcap receptacle Gymnasium light

19. Electrical Wire

- All Stranded copper wire only (no solid wire).

G. PLANTING

1. Turf Seed Mix

- 10% Bermuda Shorts (Yuma/Black Jack/Sahara)
- 10% 'Barclay' Perennial Rye
- 60% 'Turfstar" Perennial Rye
- 20% Hulled Bermuda* (Common Bermuda)

OR

- Agrono-tec '2A Ballfield Mix'

*Hulled - April through September
Unhulled - October through March

2. Turf Sod Mix

- Agrono-tec '2A Ballfield Mix'; or
- Agrono-tec 'Ballfield Mix Number 2-A'; or
- Pacific Sod 'Santa Ana Bermuda'*; or
- Pacific Sod 'Tif-Green Bermuda'*; or
- Pacific Sod 'GN-1 Bermuda'*; or

*All of these hybrid Bermuda sods that do not contain perennial rye shall be over seeded with: 'Grand Slam' or 'Turfstar' Perennial Rye, at a rate of 5 lbs./1,000 square feet.

H. SITE AND SPORTS LIGHTING

1. Electrical Enclosures

- NEMA 3R (stainless steel)

2. Security Lighting Mast Arm (slip-on type)

- American SRP
- Spaulding 'Palomar'

3. Security Lighting Time Clock

- TORK 7200zl Astro Timeclock, no substitution

I. GRAFFITI PROTECTION

1. Graffiti Protection

Anti-graffiti coating shall be as manufactured by Monopole Inc. Materials shall be applied as specified below:

1st Coat: Aquaseal ME12 (Item 5200)
2nd Coat: Permashield Base (Item 6100)
3rd Coat: Permashield Premium (Item 5600 for matte finish or Item 5650 for gloss finish)
4th Coat: Permashield Premium (Item 5600 for matte finish or Item 5650 for gloss finish)

CRIME PREVENTION THROUGH ENVIRONMENTAL DESIGN: CONCEPTS AND MEASURES FOR USE IN DESIGNING PARKS AND COMMUNITY CENTERS

SDPD Neighborhood Policing Resource Team
October 2008

This paper defines the basic concepts of Crime Prevention through Environmental Design (CPTED) and presents guidelines for park design and operation. CPTED is based on a set of four design and usage concepts that can lead to a reduction in the incidence and fear of crime, and an improvement in the quality of life. These concepts are defined briefly as follows:

1. **Surveillance.** Involves the location and use of physical features, electrical and mechanical devices, activities, and people to maximize visibility in the environment. Creates a risk of detection for intruders and offenders, and a perception of safety for legitimate users.
2. **Access control.** Employs people, electrical and mechanical devices, and natural measures to create a perception of risk to offenders and deny them access to targets. Also guides legitimate users safely through the environment.
3. **Territoriality.** Uses physical features and signs to control activities in the environment.
4. **Maintenance.** Allows the continued use of the environment for its intended purposes. Maintains the effectiveness of measures employed for surveillance, access control, and territoriality.

I. SURVEILLANCE

These measures deal with the location and use of physical features, electrical and mechanical devices, activities, and people to maximize visibility in the environment. They create a risk of detection for intruders and offenders, and a perception of safety for legitimate users.

A. Outdoor lighting
   1. Provide exterior lighting for visibility at night in parking lots, on pedestrian paths, at building entrances and exits, etc. to enable people to see where they are going and identify others along their route. Light should be consistent to reduce contrast between shadows and illuminated areas.
   2. Illuminate areas around buildings where persons might hide.
   3. Avoid lighting isolated areas that people should not use at night.
   4. Make sure that trees or other landscaping do not block light.

B. Outdoor sightlines
   1. Maintain tree canopies at least 8 ft above the ground.
   2. Keep shrubs trimmed to less than 3 ft except where higher plants would not block any views, lighting, or camera coverage, or provide hiding places. For example, higher bushes or trees with lower canopies could be

planted next to a blank wall or the side of a building.

3. Grade land where practical without substantially altering the natural terrain to provide unobstructed sightlines within the park and from adjacent streets and developed areas. Make sure that mounds and other terrain features do not create hiding places.
4. Use open landscaping and see-through fences instead of solid walls or hedges for boundaries where privacy or environmental noise mitigation is not needed.
5. Orient buildings for good visibility of the parking lots and other buildings in the park.
6. Orient parking spaces to provide good visibility between cars from the buildings.
7. Use open or see-through structures for exterior stairway and walkway railings, sitting areas, patios, parking spaces, etc.
8. Eliminate possible hiding or entrapment spots, e.g., dense shrubs, along pedestrian paths.
9. Install cameras or mirrors to provide visibility where sightlines are obstructed.
10. Use streets as buffers between parks and other land development where possible.

C. Outdoor facilities and activities

1. Install benches for people to sit and observe activities in the park. Plant trees to shade the benches.
2. Locate facilities for activities that attract large numbers of people in areas of otherwise low usage so users can provide surveillance of the area. These include basketball courts, ball fields, etc.
3. Locate facilities for activities that involve a few people at a time in areas of high usage and good visibility so they can benefit from the natural surveillance in the area. These include pay phones, bike racks, parking lots, hiking or jogging trails, etc.
4. Locate paths to and from buildings through areas that need surveillance. Use most direct route where possible.

D. Outdoor restrooms

1. Design interiors so that free-standing exterior privacy walls are not needed. Such walls can be used as hiding places and become entrapment spots. They also obstruct visibility of the entrances.
2. Locate entrances so they are visible from the main activity areas of the park.

E. Indoor facilities and activities

1. Locate activities that attract a large number of people where they can be supervised easily by park personnel.

2. Locate activities that involve a few people at a time in areas of high usage and good visibility so they can benefit from the natural surveillance already in the area. These include restrooms, elevators, stairs, pay phones, etc.
3. Locate restrooms along main corridors and not around corners or in alcoves.
4. Locate the office and front counter where personnel in it have a good view of the main building entrance.
5. Provide a clear view of room interiors from room entrances.
6. Keep hallways clear of display cases, etc.

F. Windows and doors
1. Provide two-way visibility in areas open to the public. Do not obstruct windows and doors with signs, displays, plants, etc.
2. Provide one-way visibility (from inside to outside) in areas not open to the public, e.g., with mirrored glass.
3. Install peepholes for viewing people seeking entrance to secure areas.
4. Install windows in corridor walls to enable room interiors to be seen from the corridors.

G. Communications systems
1. Install emergency phones, alarms, or intercoms in convenient places for people to use to report intruders or suspicious activities, or to call for help.
2. Post signs showing the locations of emergency communications systems.

H. Cameras
1. Install cameras to cover activity areas that cannot be seen by office personnel.
2. Use video analytics or intelligent video software to monitor multiple cameras for unusual or suspicious activity as it is occurring. The software will alert office personnel who have monitors, but would not be watching them all the time, that a parameter or alarm condition has occurred. These conditions can be set for day of the week and time of the day. They include the following: (1) motion in and out of an area, (2) non-motion, e.g., unattended package or illegal parking, (3) items that have moved or are missing, (4) behavior, e.g., casing vehicles in the parking lot or skateboarding, (5) numbers of people, vehicles, or other objects in the area, and (6) overcrowding, where numbers exceed a set threshold.
3. Have the cameras monitored off-site when the park is closed.
4. Call the police if a crime is observed.
5. Use cameras that provide high-quality, digital imagery of suspicious persons and activities for use by the police in investigating crimes. Some cameras will start recording at a higher resolution when an alarm

condition occurs.

II. ACCESS CONTROL

These measures involve people, electrical and mechanical devices, and natural measures that create a perception of risk to offenders and deny them access to targets. They also help guide legitimate users safely through the environment.

A. Building security
   1. Alarm all entrance and exit doors. Emergency exit doors should be self-locking and designated for use only in emergencies.
   2. Install motion detectors in all ground floor rooms with windows to the outside.
   3. Install a control panel in the office so personnel can see when any entrance or exit door is open, and when any room is occupied.
   4. Keep all supply and storage rooms locked.
   5. Locate entrances in areas that are under surveillance or direct supervision.

B. Walls, fences, and gates
   1. Make walls and fences attractive as well as durable.
   2. Use open fences, e.g., vertical wrought iron. They are preferred because they are easier to see through, harder to climb, and less susceptible to graffiti. Fences and gates should be at least 6 feet high.
   3. Use vines, thorny plants, and other landscaping along walls to make access more difficult for graffiti vandals.
   4. Install gates or bollards at parking lot entrances to prevent vehicles from entering the lots at night when the park is closed.
   5. Install shields on gates to prevent persons on the outside from inserting a hand or tool to turn handles or knobs, push in a latch, or pull against a push bar to open the gate.
   6. Use padlocks with shielded shackles that cannot be cut with bolt cutters.

C. Restraints
   1. Install barriers or other devices to prevent misuse of park facilities or areas, e.g., bathing in fountains, camping overnight, or violating protected open space.
   2. Design public amenities to discourage misuse, e.g., shape benches to be comfortable for sitting but not for sleeping.
   3. Roughen smooth surfaces and ramps in front of benches, planter boxes, low walls, steps, and railings to discourage skateboarding. Other design measures include: (1) pavement cutouts instead of planter boxes for trees, (2) shaped edges on tops of seat benches and low walls, (3) small metal or plastic discs or strips on the edges of existing benches, planter

boxes, and other flat surfaces that skateboarders abuse, (4) small metal discs or bolt heads on tops of existing railings, (5) height variations, arm rests, or seat dividers on the tops of seating surfaces, (6) breaks, bumps, or height variations on low walls, curbs, railings, and planter boxes, and (7) circular picnic tables and curved benches instead of rectangular tables and benches on concrete paving.

4. Close areas and paths when adequate lighting and surveillance cannot be provided. Post signs to indicate closures times.

III. TERRITORIALITY

Territoriality measures involve the use physical features and signs to control the use of the park and promote neighborhood pride in it.

A. Boundaries
   1. Define clear boundaries between areas that are open to the public and those that are limited to park personnel only. Signs, walls, fences, doors, gates, landscaping, etc. can be used for this.
   2. Establish boundaries to prevent conflicts between different groups, e.g., teens and seniors, so all user groups will be able to enjoy the park.

B. Signs
   1. Make signs legible and unambiguous. Use symbol signs where possible.
   2. Locate signs in strategic places.
   3. Use signs to: (1) discourage access to dangerous areas, (2) indicate opening and closing times, (3) display park regulations, (4) direct people to safe paths, exits, emergency assistance, means of calling for help, etc., and (5) inform people how to report maintenance problems.

IV. MAINTENANCE

Maintenance measures permit continued use of the park. They help maintain the effectiveness of the measures employed for surveillance, access control, and territoriality.

A. Low-maintenance landscaping
   1. Use low-maintenance designs and irrigation systems, and drought-resistant plants to facilitate upkeep over time.
   2. Avoid use of loose rocks, bark, etc.

B. Hardening against vandalism
   1. Employ design features and materials that cannot easily be vandalized, stolen or used to damage the property.
   2. Use graffiti-resistant paint or anti-graffiti coatings on walls, benches, light poles, signs, etc.

3. Avoid blank facades at ground level.
4. Use screens, wired glass, or other protection for light fixtures, bulbs, and cameras.
5. Use shiny aluminum or shatter-resistant glass for mirrors.

C. Securing backflow preventers
1. Paint the device. Paint is a deterrent because painted metal is less valuable.
2. Camouflage the device. Fake rocks work well. Just make sure there is a one-foot clearance around the device.
3. Hide the device. Paint it green and place it in a bush or hedge. This is a low-cost measure.
4. Use a device with plastic parts. Plastic is less valuable.
5. Enclose the device in a protective cage or box. Must mount it securely to the ground and use a tamper-proof lock or else the thieves will steal the cage too.
6. Install a locking-cable system with shielded-shackle locks and a concrete foundation.

D. Securing utilities
1. Locate electrical and telephone system controls inside the building.
2. Lock any exterior electrical or telephone system components in a sturdy box with a shielded padlock.

STANDARDS AND SPECIFICATIONS GUIDELINES FROM FACILITIES DIVISION

The following should be used as guidelines only. All plans and specifications shall be routed to the General Services Department's Facilities Maintenance Division for review prior to construction.

Division 1 General Requirements

General Services/ Facilities Division requires review of all plans or designs for new or improvement projects to City owned Buildings and Facilities. Facilities Division would like review of project submittals before approval by design team.

Project Officer is to submit Facility Record form: REA-111 to Auditors Department after the award of project to contractor.

Identified Funding or Job Order numbers will be opened to Department 532 before any Project Walk-thru or Inspections can take place by General Services Department.

Division 2 Site work

Division 3 Concrete

Division 4 Masonry

Division 5 Metals

Division 6 Wood and Plastics

Division 7 Thermal and Moisture Protection

Roofing:

Option 1.

Roof material and specifications on ¼ inch to 3 inch per foot roof slope:

No gravel roofs are to be installed on any City Facility, Exterior gutters are to be used in place of internal or boxed in gutters, Flashing should be installed over the edge of the gutter and the gutter should be sloped to the down spout.

Facilities Division uses a four-ply mineral surfaced fiberglass built-up roof system. The first ply is an asphaltic base sheet that may be nailed in place or mopped in place with hot asphalt. The second ply is two layers of Glass Ply nailed or mopped in place. The final layer is one Ply of Mineral Surfaced Flex Cap sheet.

Using the glass base, start with a 12-inch wide starter piece. The following base sheet is applied full width with a 2-inch minimum lap over the preceding sheet and a minimum of 4 inch laps on the sides. All subsequent sheets will be full width with a 2-inch minimum lap.

Then using the Glass Ply, apply a 18-inch wide piece, then over that a full width piece. The following felts are to be applied full width overlapping the preceding felts by 19 inches so that at least 2 plies of felt cover the base sheet. Install each felt so that it is firmly and uniformly set, without voids into the hot asphalt.

The final layer is the Mineral Surfaced Flex Cap sheet. Prior to application, the cap sheet should be laid out on the roof and allow it to relax and flatten. Apply a mopping of hot asphalt the width of the cap sheet, and then lay the cap sheet into the hot asphalt. All subsequent courses should be applied in the same manner with a minimum of 2 inch laps on the preceding sheet and a minimum of 6 inch laps on the end laps.

- When the roof is complete there, should be 4 layers of roofing material at all locations on the roof.
- All roof jacks will be hot mopped in place
- All fasteners should be galvanized
- Asphalt should meet ASTM requirements and be applied at a minimum of 400 degrees
- All flashing and roof jacks should be minimum 24 gauge galvanized metal
- Roof drains will be cast iron or plastic with leaf strainer and minimum 3 inch outlet
- All roof mastic will meet minimum ICBO standard and contain no asbestos.
- Cant strips will be installed at 90 degree roof to wall areas
- All roof sheathing will be minimum 1/2 inch CDX plywood
- All pipes and duct work will be supported off the roof with redwood blocks
- All HVAC units will be lifted off their platforms and roofing material applied and a minimum 24 gauge cap install on the platform, then the unit set back down.

Option 2.

<u>Roof material and specifications on ¼ inch to 3 inch per foot roof slope:</u>

Facilities Division also uses a torch down application. This system is designed to be applied with a propane torch. Dibiten is the preferred brand name of this type material. One layer of 18-pound fiberglass base sheet is installed and then a minimum one layer of Dibiten poly 4.5 granular modified bitumen membrane is torch applied with a minimum 4 inch lap and a minimum 6 inch end lap. This product should be applied according to the manufactures specifications and precautions for fire protection.

Roof material for 4 inch per foot slope and greater:

Facilities Division uses a three-tad architectural grade shingle with a minimum 25 year guarantee. Minimum 30-pound felt paper is applied on a new roof or one that has been removed and the shingles are to applied to a plywood substrate. If the shingles are to be

applied over an existing shingle roof, the roof should be cleaned and any high edges of the old roof removed and then a minimum of 30-pound felt applied before the new shingles are installed. All roof shingles will be nailed with galvanized roofing nails with a minimum 7/8 inch for new roofs and 1-1/4 inch for re-roof.

Wood Shake Shingles:

Wood shake shingles are not preferred or recommended in the City but if they are to be used, Facilities Division requires that all wood the shingles be treated with a fire retardant coating and a medium grade wood shingle.

Division 8 Doors and Windows

1. Doors and frames

   (A) All hollow metal doors will be 16ga exterior, 18ga interiors. Doors will be a honeycomb-core, full edge seam welded with sealed tops.

   (B) Exterior doors that swing out should have non-removable pin type hinges.

   (C) Double doors with panic exit devices should have a mullion between doors.

   (D) Wood doors should be wood stave core, minimum 1 3/4 in. thick by 3-0 x 7-0.

   (E) Door not to exceed 8-0 in height.

   (F) Door stiles should be wide enough to accommodate heavy-duty mortise type locks.

   (G) Steel frames (jambs) will be 14ga. galvanized exterior, 16ga. cold rolled interior. Reinforce all hinge pockets with additional hinge reinforcement straps for high traffic areas.

   (H) Provide roof overhangs at exterior doors or recess entries for weather protection.

   (I) Slope concrete walkways away from doors and set thresholds in mastics for exterior doorways.

2. Storefronts

   (A) Storefronts should have minimum 4 inch framing and maximum size stiles.

   (B) Storefront doors should be minimum 1-3/4 inch thick by 3 feet-0 inch by 6 feet-8 inch or 7 feet-0 inch.

(C) Provide cylinders keyed to city wide system, (existing system is Best Access Systems)

(D) Doors not to exceed 8 feet-0 inches in height.

3. Windows

(A) Glazing for windows should be minimum 3/16 inch thick.

(B) Operable windows should have secure locking devices and be as vandal resistant as possible.

(C) Provide window screening for operable windows.

4. Hardware

(A) Locks will be ANSI 156.3 Mortise Series 1000, Grade 1 Operational and carry the approval of Federal Bureau of Prisons.

(B) Mortise locks will carry a standard 5 year warranty.

(C) Locks will have separate springs which will be internal to the lock case. Lever return springs will operate interior and exterior hubs independently. No springs will be allowed outside of door or under escutcheon or rose.

(D) Hubs will have roller bearing assembly.

(E) All strikes will have a curved lip strike.

(F) Deadbolts will be solid stainless steel (without internal riveted actuator), when deadbolt is extended 1 inch, at least 2 inches will remain in the lock case.

(G) All levers will be cast solid levers, hollow levers will not be allowed.

(H) Cylindrical lock sets may be used only on interior non-high-traffic openings. Locks will have a replaceable sheer lug which when broken will disable the lever. Clutch mechanisms will not be allowed. Locks will have 7 pin interchangeable cores. Cylindrical locks are not to be used on exterior doors.

(I) All locks and hardware should be 626 finish (26D) or 630 (32D) Bright chromed or painted finishes should not be used.

(J) All doors and hardware must meet Americans with Disabilities Act and Title 24

(K) Approved manufactures are Best Access Systems or Folger Adams with Best Lock.

(L) Panic exit devices will be Von Duprin 99, Precision Apex series or Dorma and have Best cylinders.

(M) Closers will be Dorma 8900 or Norton 7500 series or Sargent 351 or approved equal. All closers to have back check and be field adjusted to not more than 5 lb. opening force. Closers will be through-bolted to door and jamb if possible.

(N) Hinges will be Stanley, McKinney or Hager. All hinges to be Ball Bearing type 630 finish. Exterior doors that swing out will have NRP hinges. High traffic doors will be continuous types `Roton'.

(O) Doors in the following locations will have locks which are ANSI series 1000 Grade 1 SECURITY and Grade 1 OPERATIONAL. Locks will meet UL 437 requirements.

1- rooms with narcotics
2- rooms that contain an armory
3- exterior doors for Police facilities
4- exterior doors for Court facilities
5- doors to Judges chambers
6- Any exterior door which could be in a remote location or subject to high vandalism.

5. Keys and keying

(A) All cylinders will be Best 7-pin, interchangeable core and keyed into an existing factory-registered Grand Master key System. All seven pins to be operational.

(B) Furnish permanent cores to City Lock shop for final installation unless provided by manufacturer.

(C) Temporary cores (construction cores) will be installed by Contractor for security purposes. Temporary cores will be keyed alike and interchangeable with Best cores. Cores provided by manufacturer.

(D) Contractor will provide to the City Lock shop copies of Control key and Operating key upon completion.

(E) All keys and cores will have visual key control.

(F) All keys will be stamped " Do Not Duplicate".

(G) The Electric Meter Room will have S. D. G. & E. lock installed. The cylinder to be keyed to Schlage key way VTQP AA-10. Three keys are provided with lock. All keys are to be turned over to the City of San Diego Lock shop at completion of

the project. The contractor will obtain lock from any contracted S. D.G. & E. Locksmith for installation.

Division 9 Finishes

Painting:

Surface Preparation:

1. All exterior wood surfaces must be clean, firm and free of dust, grease, wax, oil, rust and other foreign matter.

2. All exterior wood will be scraped and rough edged and sanded.

3. All exterior wood will be primed with one coat of latex water base primer and two coats of finish.

4. All cracks and holes will be filled with spackle or wood putty,

5. All windows will be re glazed where glazing is missing or deteriorated.

6. All exterior wood or stucco will be painted with one coat of primer and of two coats flat or semi-gloss finish paint.

7. All doors and casing will be one coat primed and painted with two coats of finish paint.

8. Paint will be providing by Dunn Edward, Vista Paint, Frazee Paint, or ICI Paint.

Division 10 Specialties

Division 11 Equipment

Division 12 Furnishings

Division 13 Special Construction

Fire Suppression and Supervisory Systems

1 Fire Detection and Alarm Systems

   1. Fire Alarm Systems

   2. Smoke Detectors

   3. Heat Detectors

   4. Flame Detectors

5. Manual Station, Bells, AMD Horns

6. Voice Alarm Systems

7. Radio Alarm Systems

8. Telegraph Systems

2 Automatic Sprinkler Systems

1. Wet pipe sprinkler system

2. Dry pipe sprinkler system

3. Deluge sprinkler system

4. Pre-action sprinkler system

3 Water Spray Systems

1 Foam Water Sprinkler Systems

2 Standpipe and Hose Systems

3 Fire Pumps

4 Water Supply Systems

5 Fire Hydrants

6 Fixed Dry Chemical Extinguishing Systems

7 Halogenated Agent Extinguishing Systems

8 Carbon Dioxide Extinguishing Systems

9 Portable Fire Extinguisher

10 Fire Doors and Dampers

<u>Design requirements can be found in the following codes:</u>

National Fire Protection Association (NFPA)
OSHA
Basic Building Code (BOCA)
Standard Building Code
Uniform Building Code

Inspection Testing and Maintenance see:

NFPA Inspections, testing and, maintenance manual for details and references.

All Inspections, testing, and maintenance should have:

1. Visual Inspection

2. Test

3. Maintenance

4. Record Keeping on appropriate forms and copies of each

    1 Annual: TEST + MAINTENANCE FORM

    2 Semi-Annual: TEST + MAINTENANCE FORM

    3 5-Year: TEST + MAINTENANCE FORM

Copies must be sent to:

1. Local Fire Marshall
2. Building Manager or Facilities Division Coordinator
3. Fire Suppression Coordinator

For their records.

Division 14 Conveying Systems/ Elevators

1.1 Proprietary equipment of any elevator/escalator equipment will not be allowed in City conveyance system.

1.2 Diagnostic Tools and Software Manual:

2 Should elevator/escalator controls require special maintenance equipment or tools, the elevator contractor will provide to the City, all required diagnostic tools and all supporting software documentation required for the complete maintenance of the control and dispatch system and all related elevator/escalator parts. Periodic upgrades and/or calibrations to the diagnostic tools will be provided as required. Elevator contractors will identify and list the type and description of function of the diagnostic tool(s) and control components requiring such tools and submit to the City before acceptance of the elevator/escalator.

3 Diagnostic tools, whether hand-held or built into the control system, will not require recharging or reprogramming. Should recharging, re-calibrating, reprogramming or upgrading and any repair or if replacement of the diagnostic tool should be required, the contractor will

provide these services indefinitely to the City immediately upon request at no additional cost for the lifetime of the equipment.

1.3 Submittals: As-built wiring diagrams, operating and maintenance manuals will be provided at the machine room, and one set provided to Facilities Division. Other sets will be provided for the facility as required.

1.4 Door Opening and Control Device:

1. Multiple Infrared Light Beam Electronic Sensing Device: Provide new multiple infrared light beam electronic sensing device securely and rigidly mounted on the car between the car and hoist way doors. The sensing device will have a minimum of 40 infrared beam sensors spaced evenly from the floor sill to the header jamb. When the car and hoist way doors are closing, the interruption of the light beam will cause the doors to reverse automatically to the full-open position and the doors to remain open as long as the light beams are interrupted; or, when the doors are in the open position, the interruption of the light beam will cause the doors to remain open as long as the light beams are interrupted. The time interval for the initiation of the door closing operation after light beams are reestablished will be adjustable. The sensing device will have an audible obstruction alarm which can be disabled.

2. Nudging Action: In the event of an obstructed light beam is operated for a predetermined time interval (15 - 20 seconds) after automatic door closing has been initiated, a buzzer will sound and the doors will close with a maximum of 2.5 foot-pounds kinetic energy and at reduced speed. Timers will be adjustable.

3. Variable Timing Features: In the event the light beam is interrupted while the doors are opening or after the doors are fully open, the time that the doors remain open after the beam has been reestablished will be reduced to an adjustable time between one and two seconds, depending upon whether a landing call or a car call predominated. This time will be a minimum time that the doors remain open if the beam is interrupted and reestablished before the door is full open.

1.5 Provide door restrictive opening devices.

1.6 No equipment, wiring and conduits that are not related to the elevator will be installed in the elevator hoist way and machine room.

1.7 Provide one set each of vinyl-covered elevator protective pads for the elevator of the same size.

1.8 Provide three sets of all operational keys for the elevator.

1.9 Hydraulic elevators will be provided with emergency power system that will activate in the event of power failure and provide power to the hydraulic elevator and close the elevator doors, lowers the elevator to the designated landing, opens the doors allowing the passengers to exit, then close the doors leaving the elevator at rest. The elevator doors can be re-opened

from inside the elevator only if necessary. Upon resumption of power the emergency lowering device will automatically reset itself and the elevator will return to normal service.

1.10 The elevator contractor will provide all labor, parts, materials and equipment in order to furnish a complete preventive maintenance service to regularly and systematically examine the elevator equipment and provide the necessary repair and/or replacement for the duration of one year from acceptance of elevator operation.

Division 15 Mechanical

Plumbing: All City public buildings should be designed to have minimum of 3 woman's toilets and 2 sinks. 2 men's toilets 1 or 2 urinals and 2 sinks.

Plumbing Fixtures recommended for City Designed Facilities / Comfort Stations

Toilets:	Acorn wall mount Dura-Ware (with Sloan concealed flush valve include 3 inch push button assemble.)
Lavatories :	Acorn Dura-Ware
Faucets:	Chicago #333-665
Urinals:	Acorn (with Sloan concealed flush valve and 3 inch pushbutton assemble.)
Floor drains:	Zurn
Water Regulator:	Wilkins or Watts
Flushometers:	Sloan
Drinking Fountains:	Haws, High Low ADA
Hose Bibbs:	Acorn Sill Cocks

All hardware to be stainless steel (All thread, nuts, unistrut, etc)

Plumbing Fixtures recommended for City Designed Facilities All Others

Sensor or Auto Flush:	Toto
Toilets:	American Standard, Kohler, Toto
Lavatories:	American Standard
Faucets:	4 inch Centers, Moen (staff areas only) Public areas use Symmons S-6 self-closing ADA.
Urinals:	American Standard, Kohler, Toto
Floor Drains:	Zurn
Slop Sinks:	American Standard
Valves:	Nibco full port
Kitchen Sink Faucets:	Moen
Stainless Steel Sinks:	Elkay ADA Type
Water Heaters:	Rudd
Drinking Fountains:	Haws, High Low ADA
Circulating Pumps:	Bell & Gosset
Hose Bibbs:	Acorn Sill Cocks
Ball Valves:	Nibco Full Port or Apollo full port type.

Rough Plumbing:

C.I. Pipe
Vents: Copper or cast iron pipe.
C.O's on every Fixture – Full size vent, install cleanout wye then reduce vent.
Shut Offs on every Branch line – Isolation valves, hot and cold with access panels.
Copper Water Lines / Type- L
All vent penetrations to have vandal proof cap on roof.

HVAC:

1.1.10 The HVAC crew will assist the Project Engineer during the construction phase and the final walk through as needed. The City Facilities Division HVAC representative will be in discussions with the Architect and Mechanical Consultant during the first design stages of a facility.

1.1.11 Only the newest models of HVAC equipment and Building Automation Systems will be used. When the designed Automation system or Mechanical Equipment is not of the newest version or design, the most recent version and model will be installed.

1.1.12 The Manufactures representative will provide personnel, training on the operation and maintenance of the HVAC equipment, to the City HVAC personnel.

1.1.13 Technical manuals for the HVAC system and components will be provided to the Facility Maintenance Division HVAC Representative.

1.1.14 Use of underground Chilled Water and Hot Water piping will not incorporate PVC pipe wrapped in PVC jacket. Brazed Copper pipe with PVC jacket is acceptable. Brazed joints are preferred not soft solder. Copper type L is preferred and long radius elbows.

1.1.15 No refrigerant lines will be installed below grade or within a concrete slab.

1.1.16 No HVAC (Heating, Ventilating & Air Conditioning) duct will be installed below grade or incased within a concrete slab.

1.1.17 All fresh air openings for HVAC system will not be located at ground level, below grade, or within 10 feet of the buildings sewer vents or storm drain venting. (per Sec. 317.6 Uniform Mechanical Code)

1.1.18 A/C package units installed on City roofs will be down flow type only.

1.1.19 All ductwork will have exterior insulation, due to previous building air quality issues.

1.1.20 When natural gas is available at the street, natural gas will be used for all HVAC equipment.

1.1.21 HVAC unit's 3 ton (36,000 BTUs) or over, will be three phase power when available.

1.1.22 Facilities needing 80 Tons of Air conditioning or more will specify a hydronic system to be installed. Energy efficient design will be incorporated with variable speed pumps. Chiller compressors should be in closed in a way as to minimize sound travel. EPAK Chillers are a good example of this. A central boiler will be used for supplying the facility heating hot water and a scroll chiller will be used for supplying the facility chilled water system.

1.1.23 Floor zones will have there own temperature control and independent fan system for controlling the environment independent of neighboring zones.

1.1.24 Whenever possible, a scroll compressor with the maximum available warranty years offered, will be specified. When water source heat pumps are specified, a minimum of five years for the warranty on the compressor will be required.

1.1.25 Extended warranties (five yrs.) will be used for A/C compressors 5 ton and over.

1.1.26 Package units, 7 1/2 Ton or larger, will have multiple compressors or capacity unloaders for energy savings.

1.1.27 All refrigerators will be free standing, no built in units or combination units.

1.1.28 All temperature controls in gyms must be incased or covered by a metal guard box.

1.1.29 VAV System's 5 ton and over, will be either chilled water or multiple compressor system, with an adequate airflow bypass. A static bypass damper sensor will be used when a bypass damper is used in a multizone vav system application.

1.1.30 HVAC systems will use a Grasslin 365 day time clock, or it's equivalent, with battery back up. Features to include Holiday and Daylight Savings Programming. This type of Time clock should be used if a Building Automation System is not installed.

1.1.31 Safe and unobstructed access to all HVAC equipment will be provided, for maintenance & repair purposes. Equipment above ceilings should have clear access to all panels and filter removal. Equipment on roofs or equipment areas will have the needed clearance to remove filters and access all panels for service and repair.

1.1.32 Manufacturers minimum clearances will be met, for installation of all equipment.

1.1.33 All control wire colors will conform to the equipments color schedule or mechanical wiring diagrams.

1.1.34 All terminal blocks and termination points, of the control wiring, will be labeled and identified as to match the submitted drawings & schematics.

1.1.35 Only standard sized filters such as Eco Air E 35 or C 35 2 inch pleated type filters will be used and installed for efficiency.

1.1.36 All air filters, and water strainers, will be installed, to maintain easy access for maintenance purposes. If equipment, such as air handlers, fan coils, split systems or heat pumps are installed above ceiling, the use of a T bar filter housing should be used. The need to remove ceiling tiles to access filters should be avoided.

1.1.37 The City of San DIEGO HVAC Shop personnel, for compatibility of existing Building Management System control will identify standardization of the Energy Management Systems or Building Automation Systems. Example: Trane Voyager package roof tops with a Trane Building Automation system interfacing with the Trane A/C units.

1.1.38 There will be 100% compatibility between the Building Automation system and the HVAC equipment. No specialized interfacing between equipment and controls will be used to communicate between the HVAC Equipment and Building Automation System. Avoid the use of Lonworks, or any other device, which is needed to make one control system communicate with another. This creates two or more separate control systems within one building. Example, Johnson Controls Metasys as workstation and air handler control, which communicates to McQuay Open Protocol panel which, communicates with Lonworks to communicate with Heat Pumps and Chiller. This is a three party control system.

1.1.39 The Building Automation System must have the capability to perform demand limiting from the factory and will be able to receive information from a pulse meter supplied by the Utilities Company.

1.1.40 When a P.C. is specified to accompany the Building Automation System, it should be of the latest technology, not a Dumb Terminal, and have a local distributor for warranty purposes to maintain the computer.

1.1.41 All Building Automation Systems will be able to, from the factory, dial out alarms to a remote printer at the Cities HVAC Shop, via a dedicated phone line and page City personnel via the City paging system. The Contractor will supply the proper modem, specified by the Building Automation Systems Manufacturer.

1.1.42 The Building Automation System software will be Windows compatible, preferably Windows 2000. O.S.2 Operating systems are not acceptable. Compatible communication software program preferred by the manufacturer, such as Pro Comm Plus or Hyper Terminal in Windows. The automation system must communicate with the Cities HVAC Shop monitoring system site. (PC's, Laptops and alarm Printer)

1.1.43 The Use of Software for a graphical application on a local PC is acceptable but must not require a specialized security key connected to any PC or LAN devices.

1.1.44 Specialized software or security cards or chips should not be used or be needed due to extra expense to the City. The local operating system PC should be an off the shelf type product and current within its design year of start up. No special built PC should be accepted. A local printer will be supplied for the use of system alarms and user login printing.

1.1.45 The control system should be completely independent in operation and not dependant of other devices within its DDC network. If a loss of communication occurs with the LAN, the individual units should resume normal occupied operation with its last known set points.

1.1.46 Building Automation System will be stand alone. Equipment end devices will not be dependent of a PC to receive Time of Day Schedule, Holidays or On Off control. Equipment should be able to start without needing personnel to turn something on in the event of a power failure.

1.1.47 Building Automation System end devices controlling equipment such as Fans and Pumps must have Hand Off Auto capability.

1.1.48 Water and Air Flow switches if used in equipment must be approved by equipment manufacture. These devices must also be compatible with Building Automation System.

1.1.49 Local PC must be equipped to accomplish a full back-up of PC.

Division 16 Electrical

PART 1

1.1 P.V.C.

1.1.1 All conduits in the ground will be P.V.C. schedule #40, (minimum) 3/4 inch or larger in diameter.

1.1.2 All P.V.C. will be buried below ground level and NEVER be in a concrete slab or concrete floor.

1.1.3 All stub-ups in P.V.C. will be changed to E.M.T. in walls. Exceptions are outside block walls can be P.V.C.. No flexible conduit will be used.

1.2 E.M.T. Conduit

1.2.1 All wiring inside the building will be in E.M.T. conduit.

1.2.2 All E.M.T. connector, coupling, and other fittings will be non- cast steel compression type.

1.2.3 No BX or MC cables allowed.

1.3 Rigid Conduit

1.3.1 All conduit exposed on salt air to be PVC coated.

1.3.2 All conduit exposed below 4 feet of finish grade on walls.

1.4 Flexible Steel Conduit

1.4.1 Only on motor connection and fixture tails, not over 6 feet in length.

1.5 Boxes

1.5.1 Any exposed wiring device box will be cast iron only. No cast aluminum.

1.5.2 All exterior light fixture junction boxes will be cast iron only. No cast aluminum.

1.5.3 All outside outlets will be in a recessed stainless steel box with a flush, lockable cover and a 20 G.F.I. receptacle. (Cole TL310)

1.5.4 Inside wiring device boxes and junction boxes will be at least 4 inch square by 1-1/8 inch deep.

1.5.5 Electrical, phone, and data floor boxes will be brass type (RFB style Walker) with tamper – proof screw cap only. All brass covers will be flush with the floor. Floor monuments are not acceptable.

1.5.6 Flat wiring will not be used.

Wire

1.6.1 All wiring will be stranded, copper THHN type, including all #12 A.W. wire.

1.6.2 Minimum wiring size will be #12 A.W.C. stranded. EXCEPT for control circuits will be #14 A.W.C. stranded wire. NO SOLID WIRE

1.6.3 One neutral for every one circuit pulled. No sharing on neutral wires anymore.

Marking and Names Plates

1.7.1 Name plates: Furnish and install a minimum size of 1 inch high and 3 inches wide by 3/32 inch thick matte white (for normal power) and red (for emergency power) laminated phenolic nameplates with 1/4 inch white characters engraved in the plastic for all items of electrical equipment including, but not limited to switchboards, panel boards, automatic transfer switches, motor control centers, feeder circuit breakers, relays, time switches, disconnect switches, exposed pull or junction boxes, and all

control equipment. Name plates will be attached with 2 cadmium-plated screws. Adhesive attachment will not be acceptable. Punch strip tape type name plates with card holders in any form are prohibited.

1.7.2 Provide wire marker on each conductor in electrical panel pull box, outlet, and junction box. This includes all disconnects an connections. *If more than one neutral conductor is present, mark each related circuit and panel number.

1.7.3 Label outside of all cover plates of wiring devices and junction boxes with circuit and panel number. Each branch circuit device cover plate will be labeled (engraved or silk screen) to indicate the branch circuit and panel number. Devices will include, but not be limited to, the following: toggle switches, dimmer switches and receptacle.

Grounding

1.8.1 All raceways will include a full size green insulated ground wire terminated at each outlet box, device enclosure, etc. and connected back at the panel boards, switchboard or cabinet on the appropriate ground bus.

1.8.2 The green insulated ground (bond) wire will be spliced together within the outlet box. A green insulated bonding jumper will be provided from the splice to the box body. Attachment to the box body will be provided using a tapped #10-32 x 3/8 inch screw minimum. A green insulated bonding jumper will be provided from the splice to the receptacle ground screw even with self grounding receptacles.

Devices and Cover Plates

1.9.1 Wall switches - 20 AMP 120v/277v Specify:

A. Hubbell 1221-G

B. Bryant 1221-G

C. P&S 1221-G

1.9.2 Duplex Receptacle - 15 AMP - 20 AMP 120v/277v Specify:

A. Hubbell - (20 AMP) #5362

B. Bryant - (20 AMP) #5362

C. P&S - (20 AMP) #5362ALA

D. Leviton -(20 AMP) # 16362

1.9.3 All devices are to have clamp style side/ back connections for stranded wire only.

1.9.4 All receptacles and switches on emergency power will be RED.

PART 2

2.1.0 Hand Dryers

2.1 Install at least one hand dryer 2000 watt in each restroom. City Standard is the World Hand Dryer. Pipe chase use Fastair thru the wall units.

2.2.0 Exit Signs

2.2.1 All exit signs will be Atomic 20 year life with polycarbonate lens. City Standard is Permex exit sign.

2.2.2 L.E.D. exit signs are good, but the battery only last 3 to 5 years.

2.3.0 Emergency Battery Systems

2.3.1 Batteries shall be 10 year full warranty (not to be pro-rated) or independent battery pack. (i.e. Dual-light)

2.4.0 Low Voltage System for Title 24

2.4.1 Avoid low voltage programmable systems (i.e., Malcolm X. Library). If a system must be installed use it for only large rooms over 5000 feet, in all other areas use normal switching. Use Tork Time clock 7200KL. Also, all software manuals and training to program the system must be given to Facilities Division Electrician no later than on final walk thru. Brand name system Neel.

PART 3

3.1.0 Light Fixtures

3.1.1 Reduce the number of decorative and display light fixtures where possible.

3.1.2 Light fixtures will be high quality, long lasting, brand name, Energy Efficient and made in the U.S.A., with easy to replace lamps. The number of different types of fixtures must be kept to a minimum and the ease of re-lamping must be a major consideration in fixture selection.

3.1.3 Standard 4 foot fluorescent fixtures are most desirable in the general area.

3.1.4 Metal Halide, indirect light fixtures are great in high ceiling areas.

3.1.5 Recessed floor cans with P.L. lamps are good in restrooms.

3.1.6 Do not use low voltage light fixtures.

3.2.0 Outside Light Fixtures

3.2.1 All outside light fixtures will have polycarbonate lenses, vandal resistant screws. City Standard is Kenall 5010, 3826.

3.2.2 Install light fixtures for library sign, book drop and all outside door openings.

3.2.3 Wall mounted light fixtures will be used for general outside area for security and safety.

3.2.4 Libraries will be well lit inside and out.

3.2.5 Avoid small light fixtures in steps, use pole or wall lights.

3.2.6 Avoid tree lights that are mounted above the ground (i.e., Pacific Beach Library).

3.2.7 Avoid in ground lights (i.e., Mira Mesa Library). If it is necessary use only brand name City Standard Hydrel.

3.2.8 Avoid low voltage light fixtures.

3.2.9 Heavy duty mounting will be needed for all outside light fixtures.

3.2.10 Parking lot pole light are necessary in all parking lots.

3.2.11 We encourage wall mounted light fixtures on the building.

3.2.12 All exterior building lighting will have separate circuits from exterior pole lighting.

3.3.0 Time Clocks

3.3.1 All time clocks will be City Standard Tork 7200kl. Astronical, 40 amp contact.

3.3.2 Lighting contactor will be necessary if more than 2 circuits for outside lights. Install hand, off, automatic switch for testing during the day for outside lights.

3.3.3 Do not install programmable time clock (problem with different clocks).

3.3.4 Inside lights will be on lighting contactor controlled by separate time clock or switches.

3.4.0 Lamps

3.4.1 Provide a spare case of lamps for every type used, including M.H., incandescent, H.P.S., L.P.S. and fluorescent lamps. Provide no later than final walk thru.

3.4.2 Avoid incandescent lamp.

3.4.3 Low pressure sodium lamp are use only in parking lot lights.

3.4.4 When possible install 130 volt lamps

3.4.5 Standardize with 4 foot fluorescent energy 35 watt cool white T-8 lamps.

3.4.6 Use brand name electronic ballast, 5 year warranty.

3.4.7 Reduce the number of decorative and display lamps.

3.4.8 Provide fixture location that allows easy lamp replacement, this is a major problem.

3.4.9 Brand name lamps are a must.

3.4.10 Outside lamps will be high pressure sodium, (general lighting) fluorescent (signs) and metal halide (for security).

PART 4

4.1.0 Conduits, Raceways and Boxes

4.1.1 All Flexible conduit will have a green ground wire. It will only be used for motor connections, fixture tails, or used in existing walls (6 inches or less). Non-metallic or sealtite will be used in damp locations and machinery rooms.

4.1.2 Conduit run above suspended ceilings will be supported from the building structure independently and will be run with sufficient clearance from the ceiling system to permit the tiles to be removed and to allow full access to the space above.

4.1.3 Roof top conduits (rigid steel) will be neatly grouped and installed parallel to the building lines. Support conduit on minimum 2x 4 redwood sleepers at minimum 5 foot spacing.

4.1.4 Home runs will be a minimum of 3/4 inch conduit. 1/2 inch can be used to supply a single termination (e.g., conduit going from switch box to single light fixture).

4.1.5 Junction and Switch boxes shall be a minimum of 4 inch square in size and a minimum of 2-5/8 inches deep.

4.2.0 Wires and Conductors

4.2.1 All insulation in AWG sizes 10 and below will be impregnated with color according to the following:

	480/277 volts	208/120 volts
Phase A	Brown	Black
Phase B	Orange	Red
Phase C	Yellow	Blue
Neutral	Gray	White
Ground	Green	Green

Where color other than black is not an integral part of insulation use 3M No. 35 tapes in the same color code to identify both ends of conductors No. 8 and larger. Use other colors as required to identify control or other special circuits. Ground conductor will have green insulation for 1/0 or smaller conductors, green tapes on other colors of insulation are NOT acceptable.

4.3.1 Light fixtures commonly used by the City of San Diego:

4.3.2 Indoor/Outdoor

1. Gym light fixture- Holophane 400w- Glass- prsl 400MH, 12DD WG212B CDP.L5.15.3P

2. Compact fluorescent - Eclipse 26 watt CMK series

3. Ceiling mount fluorescent - Kenall, No. S1212LPMW132MB120

4.3.3 Outdoor Security Lighting

1. High pressure sodium (HPS) - Kenall, “Millieum”50 watt, minimum

2. High pressure sodium (HPS) - Kenall, 50 watt, minimum

3. In ground - Hydrel Only (Tree lights)

4.4.0 Switchgear and Electrical Panels

4.4.1 A. Supply 10% spare breaker space in all panels and copper bus.

B. Provide 10% more ampactiy for electric panel above calculated load requirements.

C. Provide on 3/4 inch conduit for each three spares or spaces in all flush mounted power or lighting panel boards. Route conduit to accessible space above the ceiling.

D. All panels will have bolt on breaker, copper buss, and full size neutral-ground bar.

E. Main Switch and all circuit breakers will be supplied with a name plate adjacent to each device as specified under Marking and Name plates.

F. Fusible Switches: (heavy duty) switches, with fuses of classes and current ratings indicated. See Section Fuses for specifications. Where current limiting fuses are indicated, provide switches with non-interchangeable feature suitable only for current limiting type fuses. Each fusible disconnect switch will be equipped with a blown fuse indicator module.

4.4.2 Fuses

A. Fuses will be class ARK rejection type.

B. Fuses serving motor loads will be dual element with a minimum time delay of 10 seconds at 500 percent rating. Fuses will be current limiting time delay type with interrupting capacity of 200,000 ampere RMS symmetrical minimum.

C. Fuses will be Bussman or Gould Alow peak, only.

Provide spare fuses in the amount of ten percent of each size and type installed, but not less than three; delivered to the Owner upon final acceptance of the project. Provide and install fuse cabinet in the electrical room for storing these extra fuses.

4.4.3 Transformers :

A. Attach incoming and outgoing conduits to the transformer case with approximately 18 inches of flexible conduit to reduce noise transmission. Provide separate grounding jumper when using flexible conduit.

B. Maintain a minimum of 1 foot-0 inch free air space between transformer and walls.

C. All transformers will have name plates showing its rating, circuit number it is fed from and panel it is feeding.

D. Install transformers on seismic style vibration isolator pads (feet).

4.4.4 Generators, Motors, Controllers and Fire Alarms

A. Generator KW rating must be at least 10% more than calculated load for future use requirements. Kohler generators only. Documentation and repair manuals will be supplied.

B. Motors will be energy efficient with sealed bearings.

C. Programmable logic controller (PLC): The contractor will furnish, to the City a licensed copy of the software for the PLC and all files and hard copies of the ladder logic with reference documentation.

D. Fire Alarms: Use only Edwards, Notify, or Simplex fire alarms.

PART 5

Designs, Submittals and Final Walk-Thru

5.1 Design

The architect's electrical engineer must consult with the City of San Diego's Facilities Division personnel during the design phase and throughout the project. The City staff has developed standards that must be incorporated into the plans and specifications.

5.2 Submittals

All electrical submittals will be reviewed thru Facilities Division Electrical crew. All comments will be in writing within five days. This is very important to us in Maintenance so that we get the item that is equal or spec. out. Especially light fixture, switches, recept. and electrical equipment.

5.3 Final Walk Thru

All manuals and training on all electrical system will be done at this time, which includes, but not limited to: testing of emergency systems, time clocks, lights, and exhaust fans. Provide one set of blue prints, spec book, and submittals.

5.4 Manual and Documentation

The Contractor will furnish operation and maintenance manuals for each electrical system and for each piece of equipment. The complete manual, bound in hardback binders, or and approved equivalent will be provided to the Owner's Representative. The number of copies will be as indicated in Division 1. One manual will be furnished prior to the time that the system or equipment tests are performed to the electrical shop:

City of San Diego
General Services / Facilities Division
Electrical Crew, Suite A, Bldg. 38
San Diego, CA 92102

The remaining manuals will be furnished before the contract is completed. The following identification will be inscribed on the cover; the words OPERATING AND MAINTENANCE

MANUAL, the name and location of the building, the name of the Contractor, and the contract number.

The manual will include the names, address, and the telephone numbers of each Subcontractor installing equipment and systems, and of the local representatives for each item of equipment and each system. The manual will have a table of contents and be assembled to conform to the table of contents with tab sheets placed before instructions covering each subject. The instruction sheets will be legible with large sheets of drawings folded in. The manual will include, but not limited to, the following:

A. System layout showing components.
B. Devices and controls.
C. Wiring and control diagrams showing operation and control of each component.
D. Sequence of operation describing start-up, operation, and shutdown.
E. Functional description of the principal system components.
F. Installation instructions.
G. Maintenance and overhaul instructions.
H. Lubrication schedule including type, grade, temperature range, and frequency.
I. Safety precautions, diagrams and illustrations.

Training:

User staff and maintenance personnel will be thoroughly trained (minimum of 4 hours) in the use of each system or major piece of equipment installed. This training will be provided as a part of the Contractors bid to supply the system or equipment. Additional training requirements, will be as specified in the subsequent sections of Division 16.

It will be the responsibility of the Contractor to provide equipment with the proper electrical characteristics for the electrical service provided. All necessary electrical components to provide a complete system will be furnished.

APPENDIX H

Standard Park Details

The following standard park details are available in electronic format upon request. Please contact the Administrative Services Division of the Park and Recreation Department at (619) 533-6597 for assistance.

Detail A-1	Multi-Purpose Court Striping - Plan View
Detail A-2	Multi-Purpose Court Striping Notes
Detail A-3	Multi-Purpose Court Color Coating - Plan View
Detail A-4	Basketball Key Striping - Plan View
Detail B-1	Tennis Court Layout - Plan View
Detail B-2	Tennis Court Color Coating - Plan View
Detail C-1	Softball Field - Plan View
Detail C-2	Softball Backstop - Side Elevation
Detail C-3	Softball Backstop - Rear Elevation
Detail C-4	Softball Backstop - Plan View
Detail C-5	Softball Backstop - Post Detail
Detail C-6	Softball Backstop Batter Board and Footings
Detail C-7	Softball Backstop Dugout - Plan View
Detail C-8	Softball Backstop Dugout - Section View
Detail C-9	Softball Backstop Notes
Detail C-10	Softball Backstop Fencing Notes
Detail D-1	Tot Lot Surfacing - Section View
Detail D-2	Tot Lot Surfacing Turn-down - Section View
Detail D-3	Tor Lot Surfacing Color Joints - Section View
Detail D-4	Tot Lot Edging at Sand - Section View

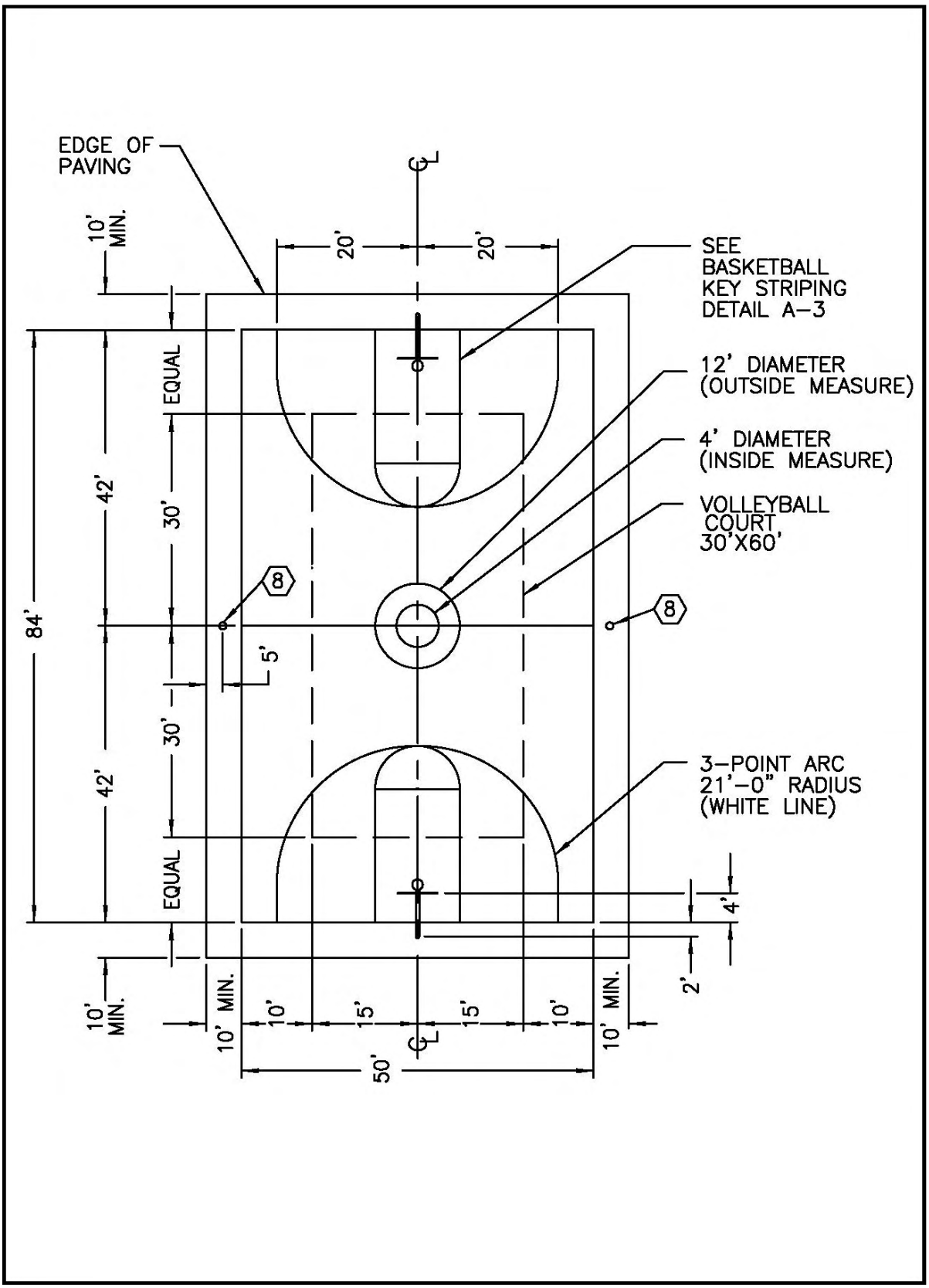

Detail A-1: Multi-Purpose Court Striping (Basketball/Volleyball) - Plan View

NOTES:

1) BASKETBALL COURT STRIPING SHALL BE 2" WIDE AND COLORED WHITE.

2) VOLLEYBALL COURT STRIPING SHALL BE 1-1/2" WIDE AND COLORED YELLOW (COURTLINES ARE SHOWN DASHED FOR CLARITY ONLY).

3) DIMENSIONS ARE TO THE OUTSIDE EDGE OF THE LINES UNLESS INDICATED OTHERWISE.

4) THE WHITE LINE SHALL DOMINATE WHERE WHITE AND OTHER COLORED LINES INTERSECT.

5) CONTRACTOR SHALL BE RESPONSIBLE FOR COURT LAYOUTS.

6) BASKETBALL GOAL POSTS SHALL BE SET 2' BEYOND BASELINE WITH 6' EXTENSIONS. RIM HEIGHT SHALL BE 10' ABOVE FINISH SURFACE OF COURT.

7) SEE COLOR COATING DETAIL A-2 FOR COLORS.

⟨8⟩ PROVIDE VOLLEYBALL POST SLEEVES IF COURTS ARE MULTI-PURPOSE, (2) PLACES.

Detail A-2: Multi-Purpose Court Striping Notes

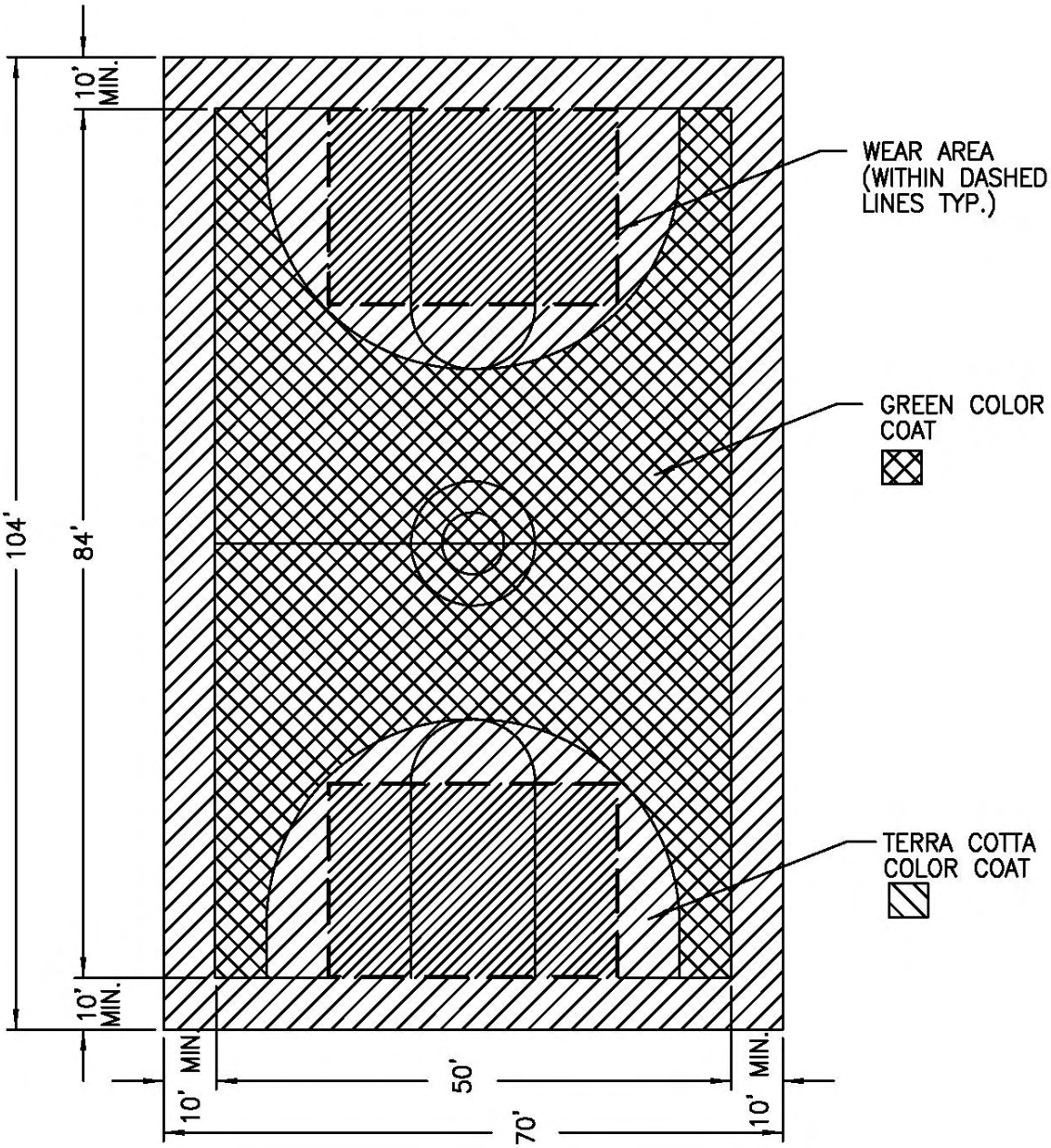

1) WEAR AREA TO RECEIVE ADDITIONAL COAT OF COURT SURFACING.

2) TERRA COTTA COLOR COAT EXTEND TO EDGES OF PAVING UNLESS OTHERWISE NOTED.

Detail A-3: Multi-Purpose Court Color Coating - Plan View

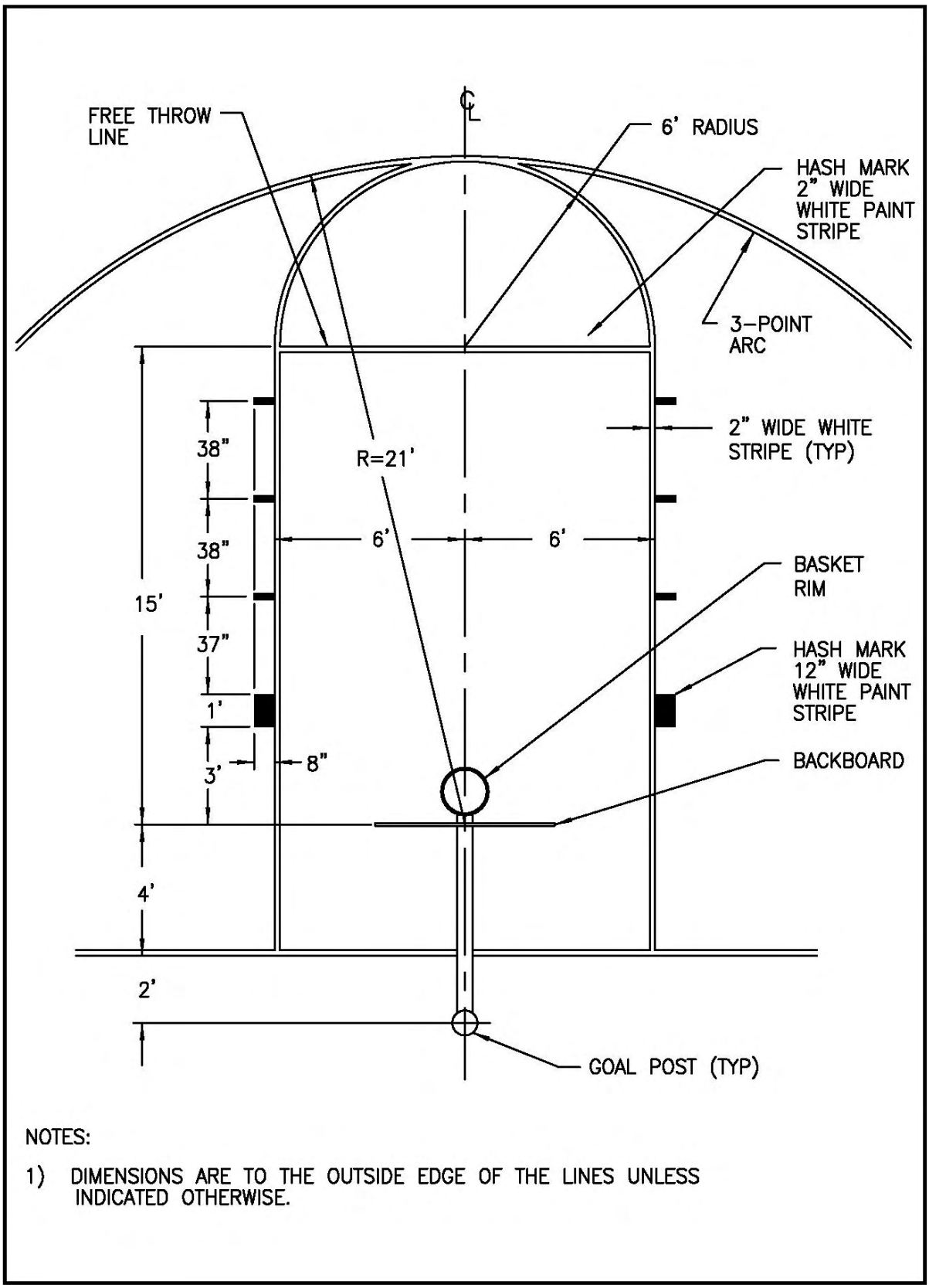

Detail A-4: Basketball Key Striping - Plan View

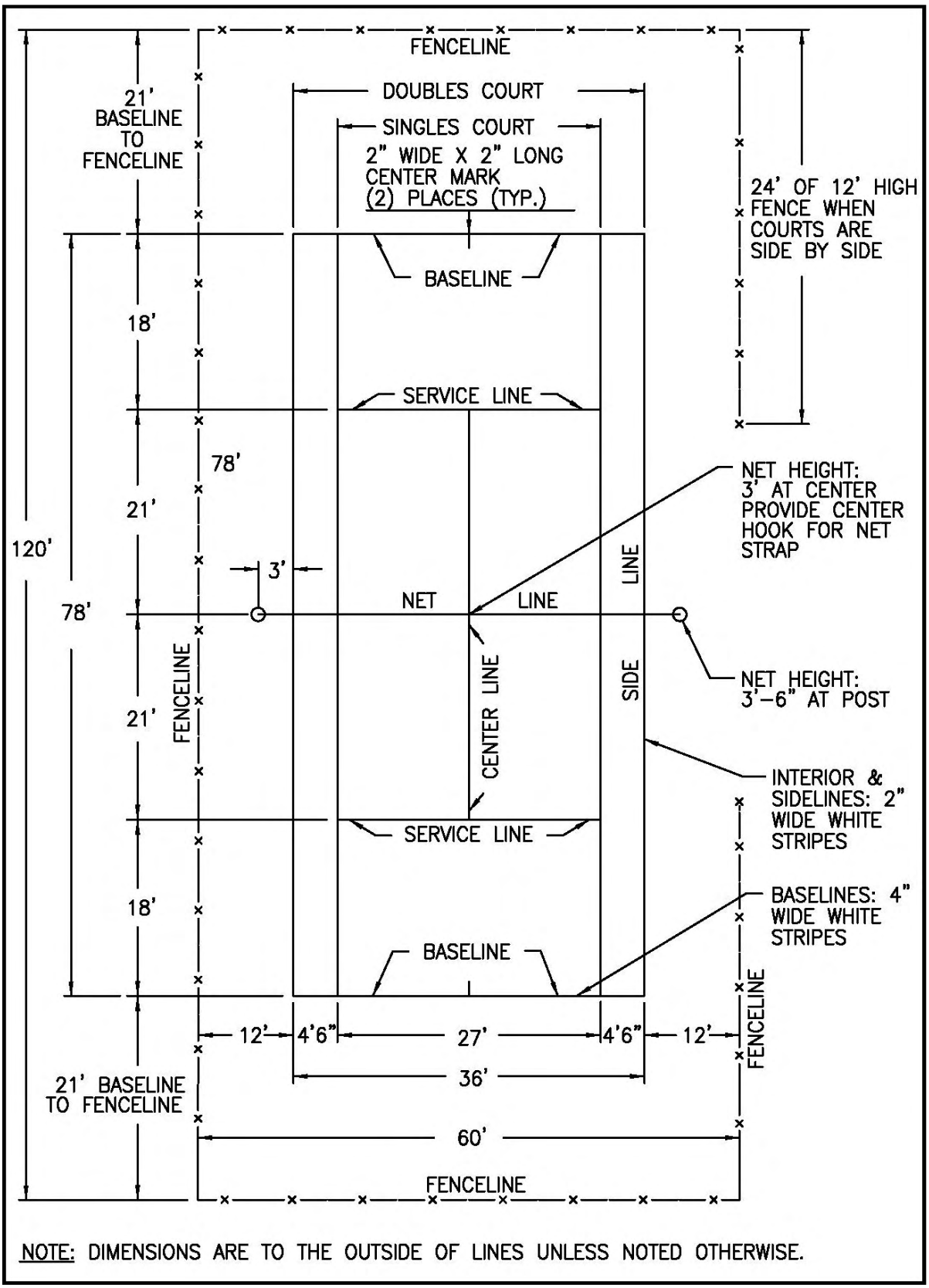

Detail B-1: Tennis Court Layout - Plan View

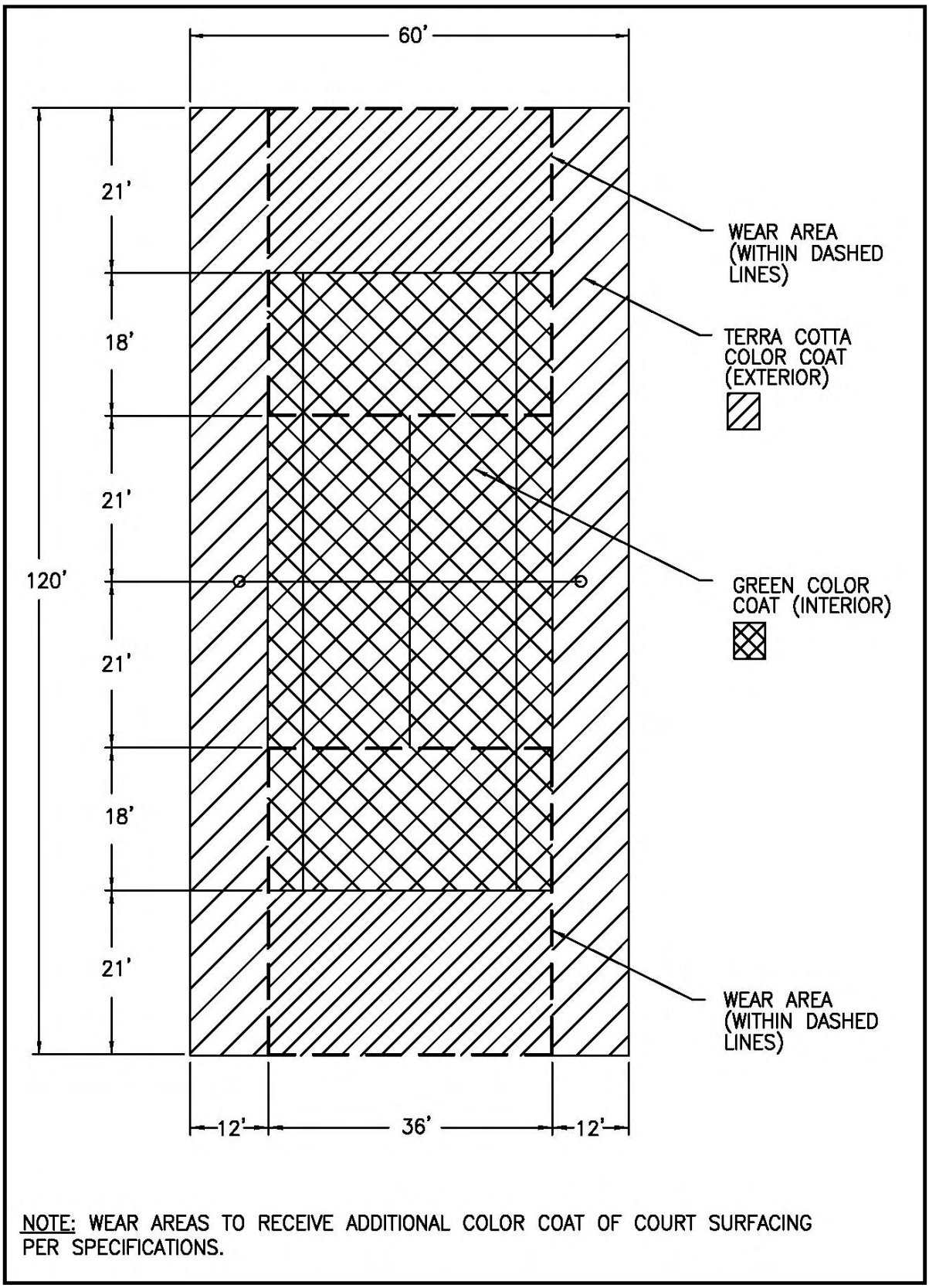

Detail B-2: Tennis Court Color Coating - Plan View

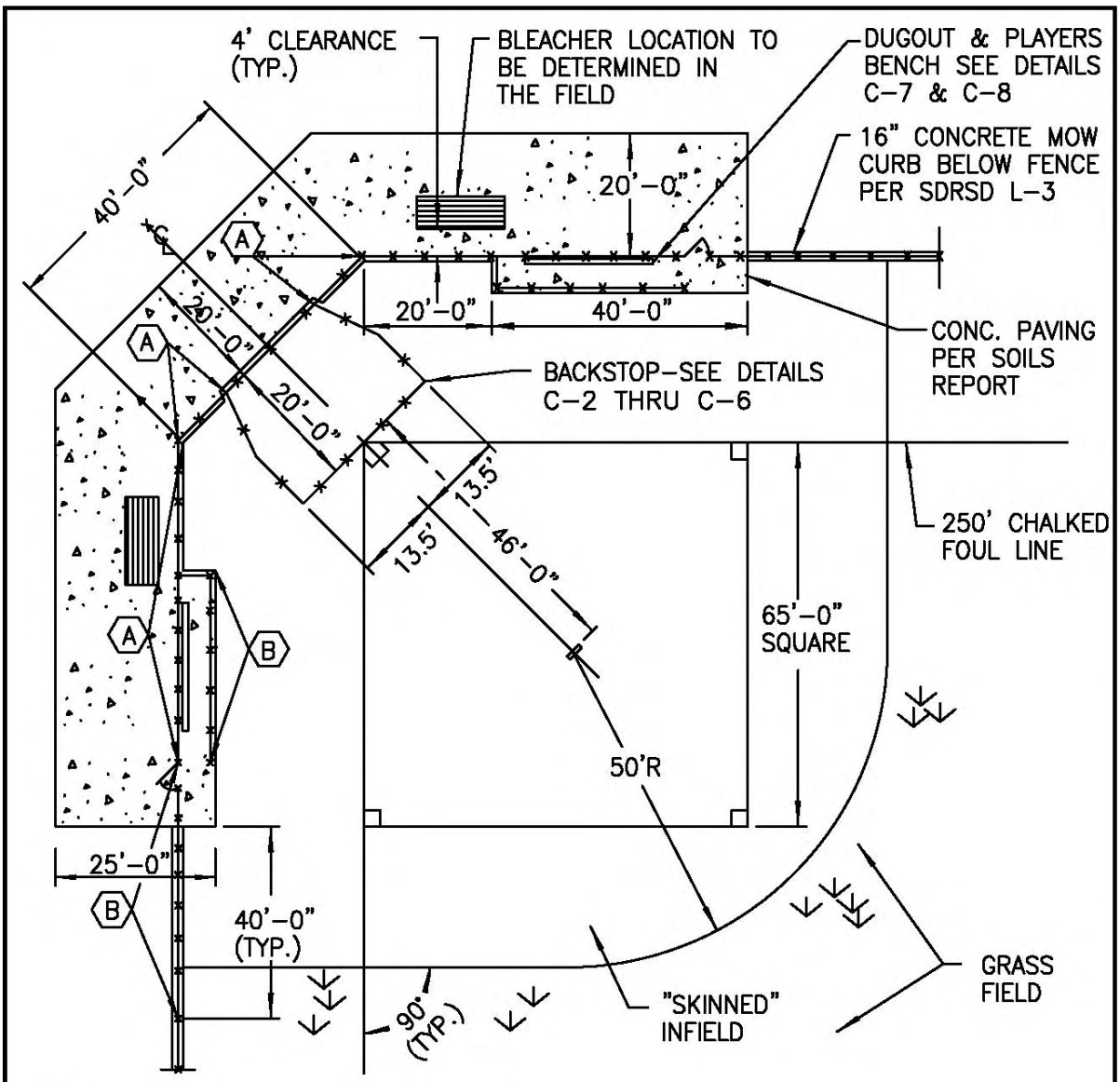

NOTES:

1) BACKSTOP AREA IS SYMMETRICAL ABOUT THE CENTER LINE, EXCEPT AS NOTED ABOVE.

2) DIMENSIONS ARE TO CENTER LINE OF FENCE POSTS.

3) CONTRACTOR SHALL INSTALL HOME PLATE AND PLACE GUINEAS AT BASE LOCATIONS FOR FUTURE BASES (BASES BY OTHERS).

4) TIE BACKSTOP IN AS PART OF FENCE, SEE BACKSTOP NOTES.

5) SEE FENCING NOTES.

(A) 12' HIGH BLACK VINYL CHAIN LINK FENCE AND POSTS PER SDRSD SDM-112.

(B) 8' HIGH BLACK VINYL CHAIN LINK FENCE AND POSTS PER SDRSD SDM-112.

Detail C-1: Softball Field - Plan View

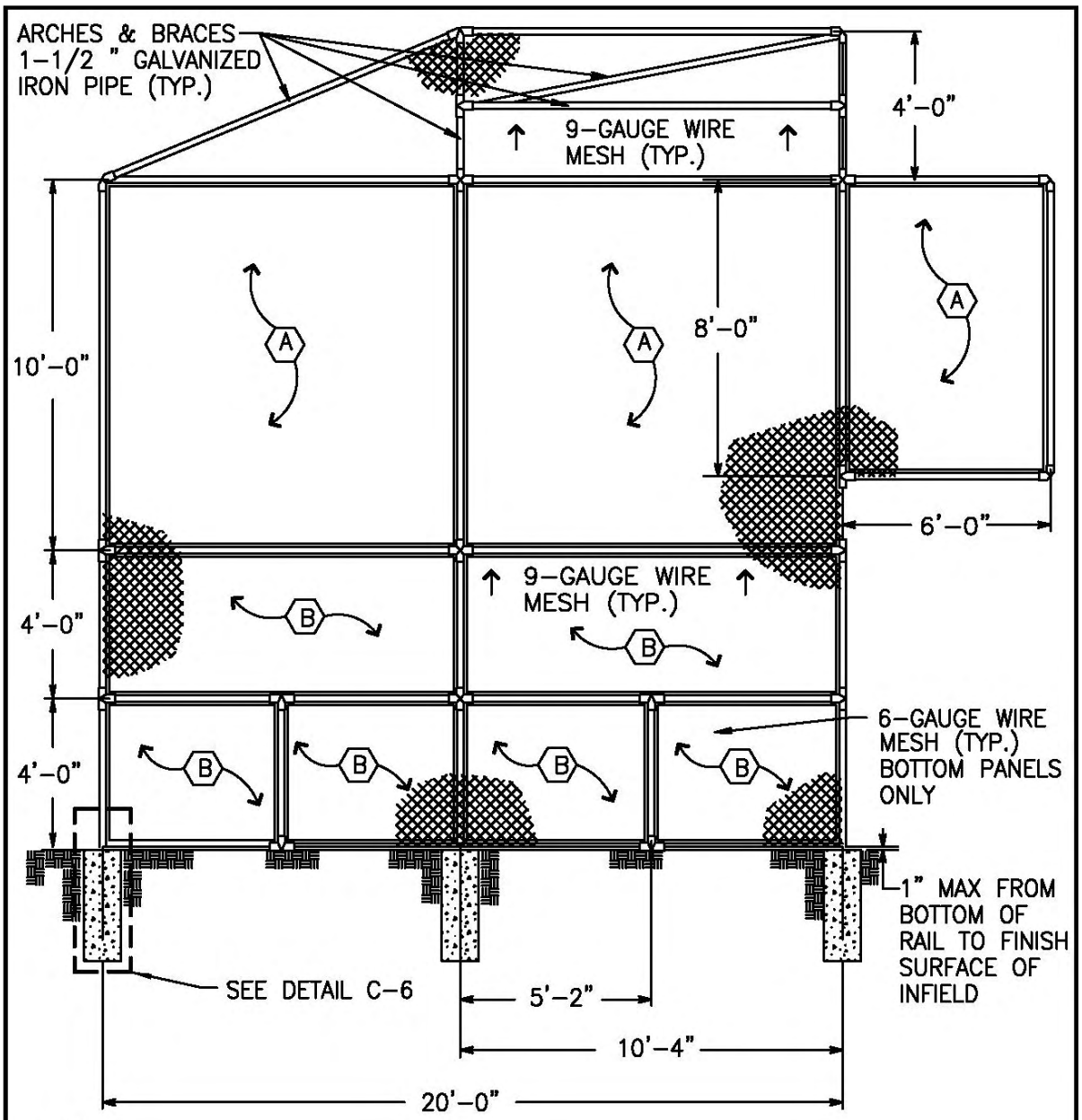

NOTES:

1) ALL PIPE FRAME TO BE 2" GALV. IRON PIPE, EXCEPT AS NOTED.

2) SEE BACKSTOP NOTES.

(A) 3/4" x 3/16" TENSION BAR WITH 1" x 14-GAUGE BANDS 12" ON CENTER (TYP.).

(B) 3/4" X 3/16" TENSION BAR WITH 1" X 14-GAUGE BANDS 8" ON CENTER (TYP.).

Detail C-2: Softball Backstop - Side Elevation

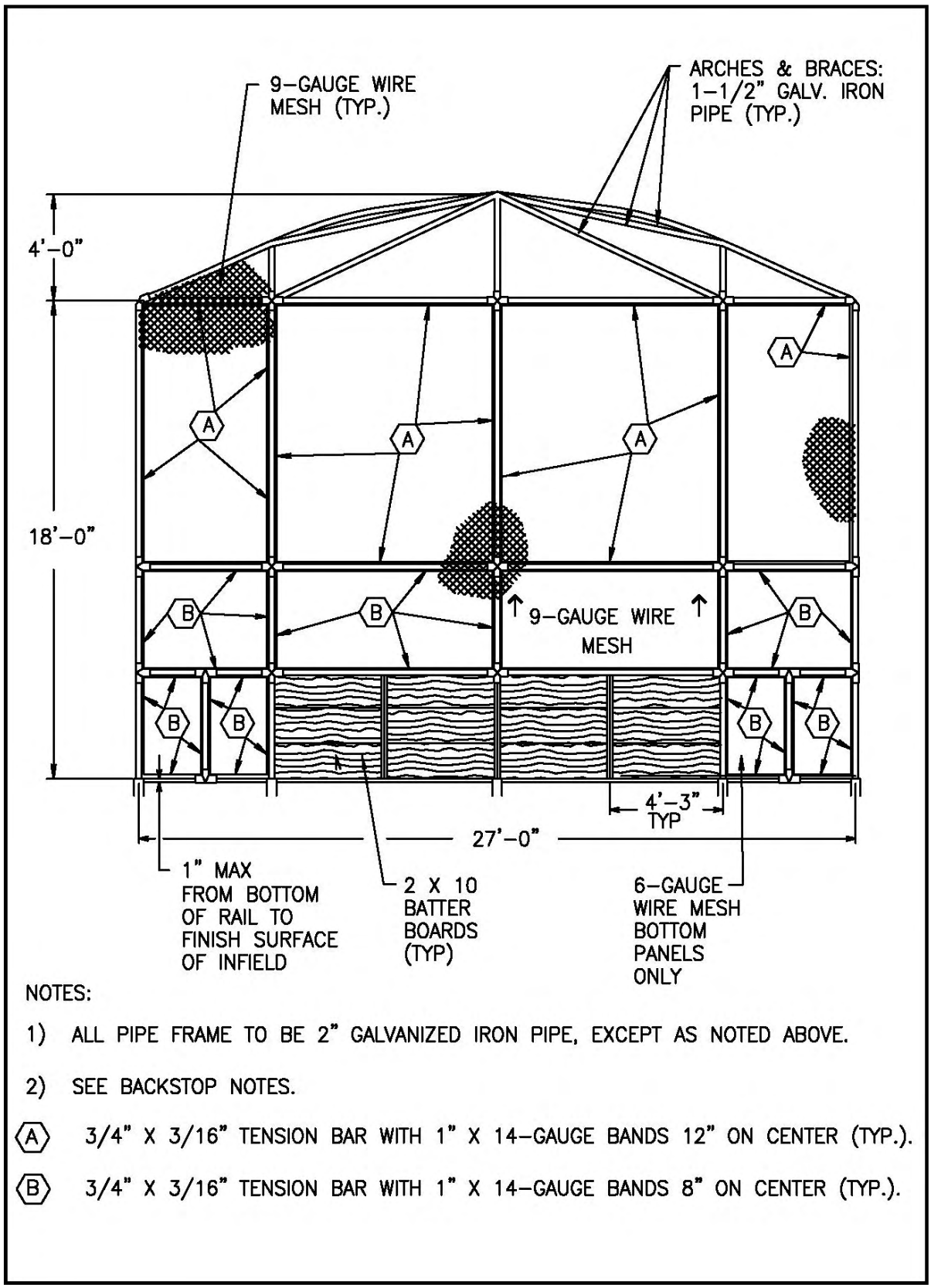

NOTES:

1) ALL PIPE FRAME TO BE 2" GALVANIZED IRON PIPE, EXCEPT AS NOTED ABOVE.

2) SEE BACKSTOP NOTES.

(A) 3/4" X 3/16" TENSION BAR WITH 1" X 14-GAUGE BANDS 12" ON CENTER (TYP.).

(B) 3/4" X 3/16" TENSION BAR WITH 1" X 14-GAUGE BANDS 8" ON CENTER (TYP.).

Detail C-3: Softball Backstop - Rear Elevation

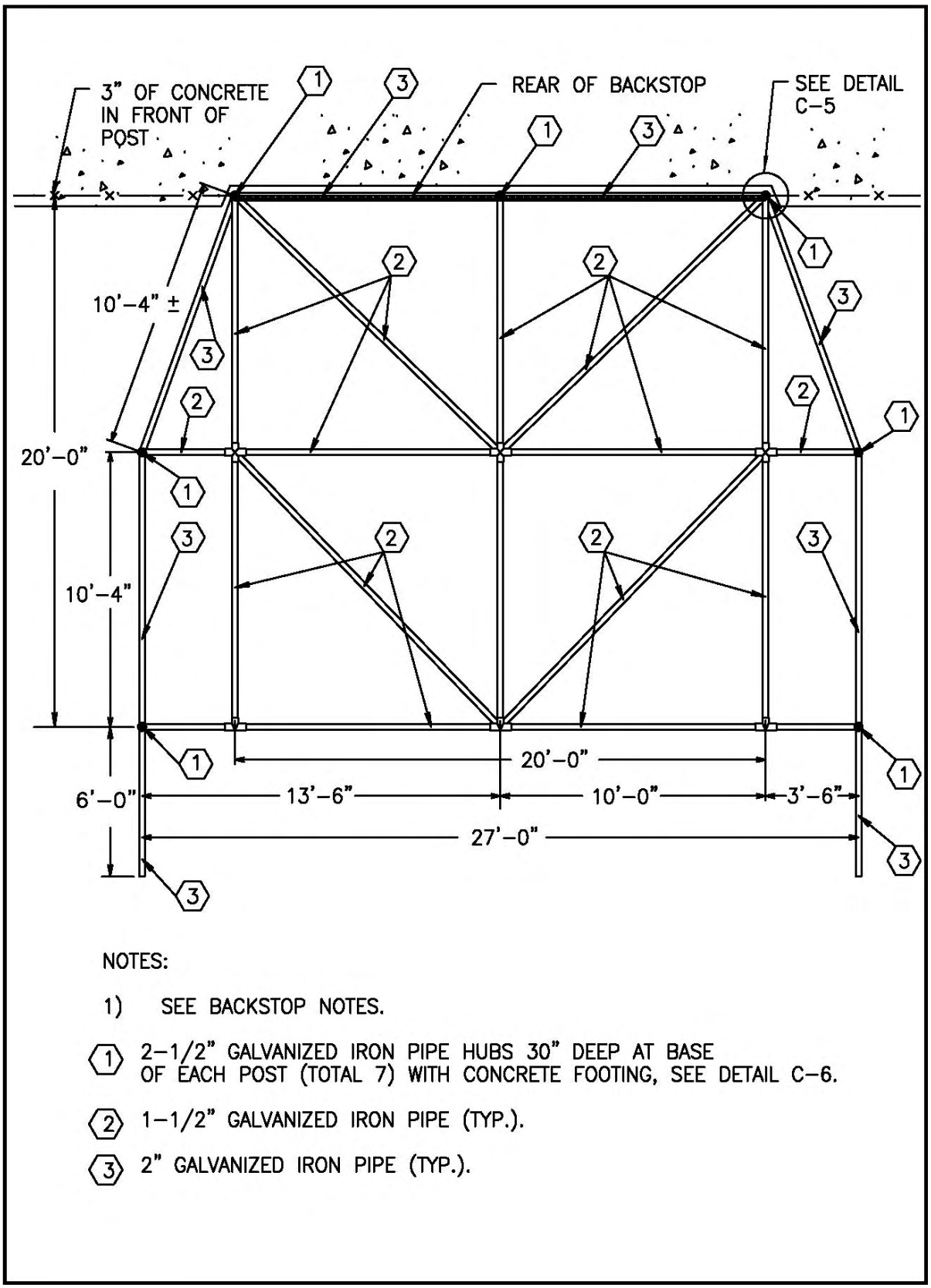

Detail C-4: Softball Backstop - Plan View

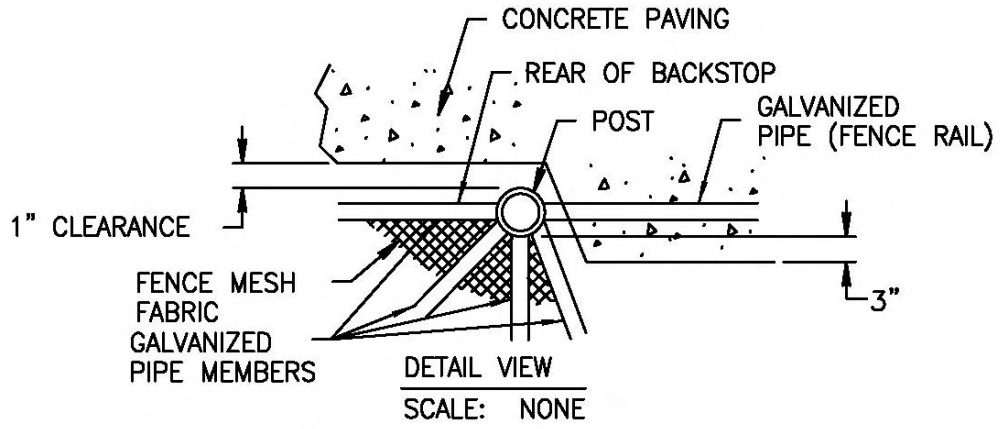

Detail C-5: Softball Backstop - Post Detail

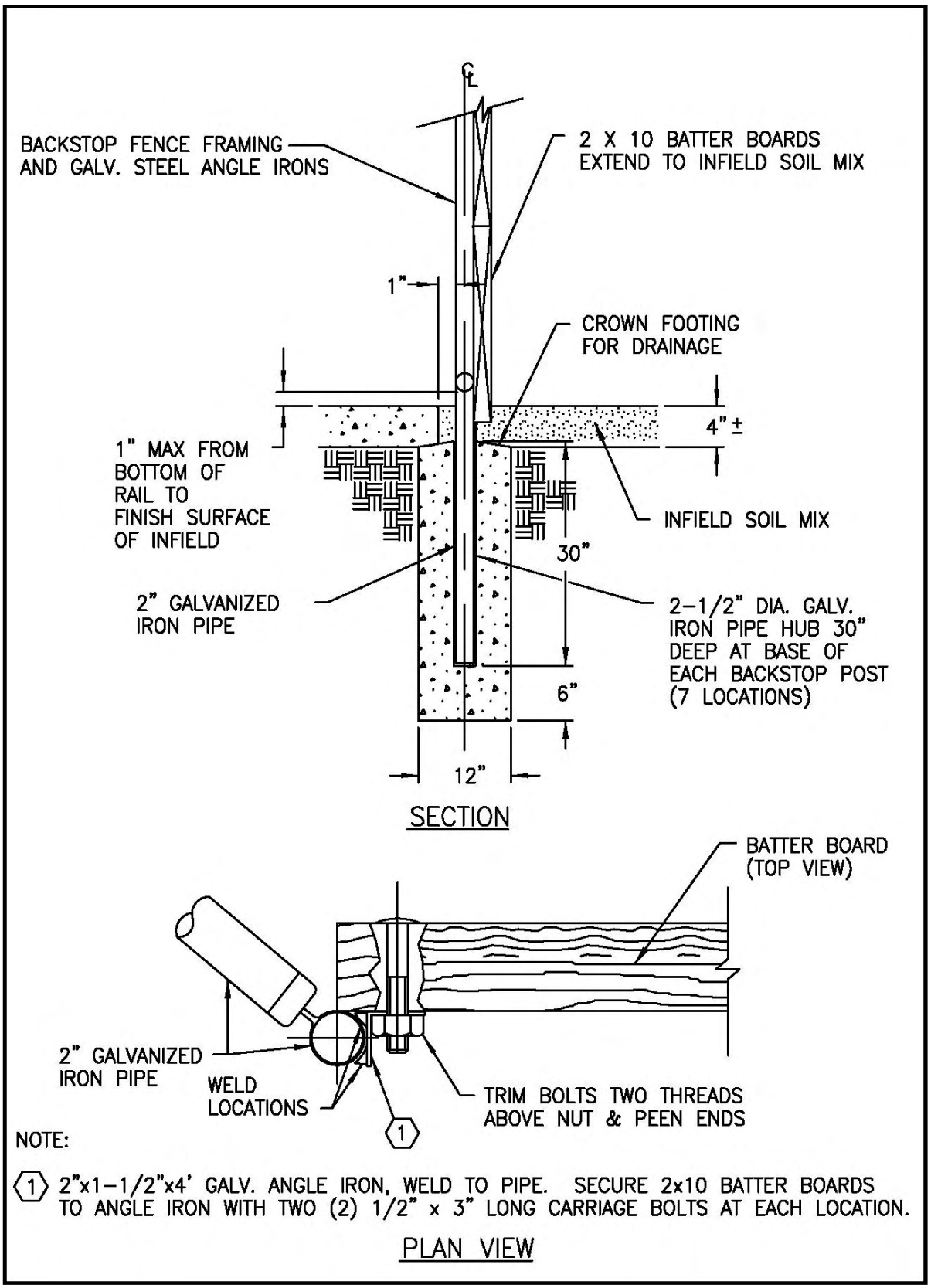

Detail C-6: Softball Backstop Batter Board and Footings

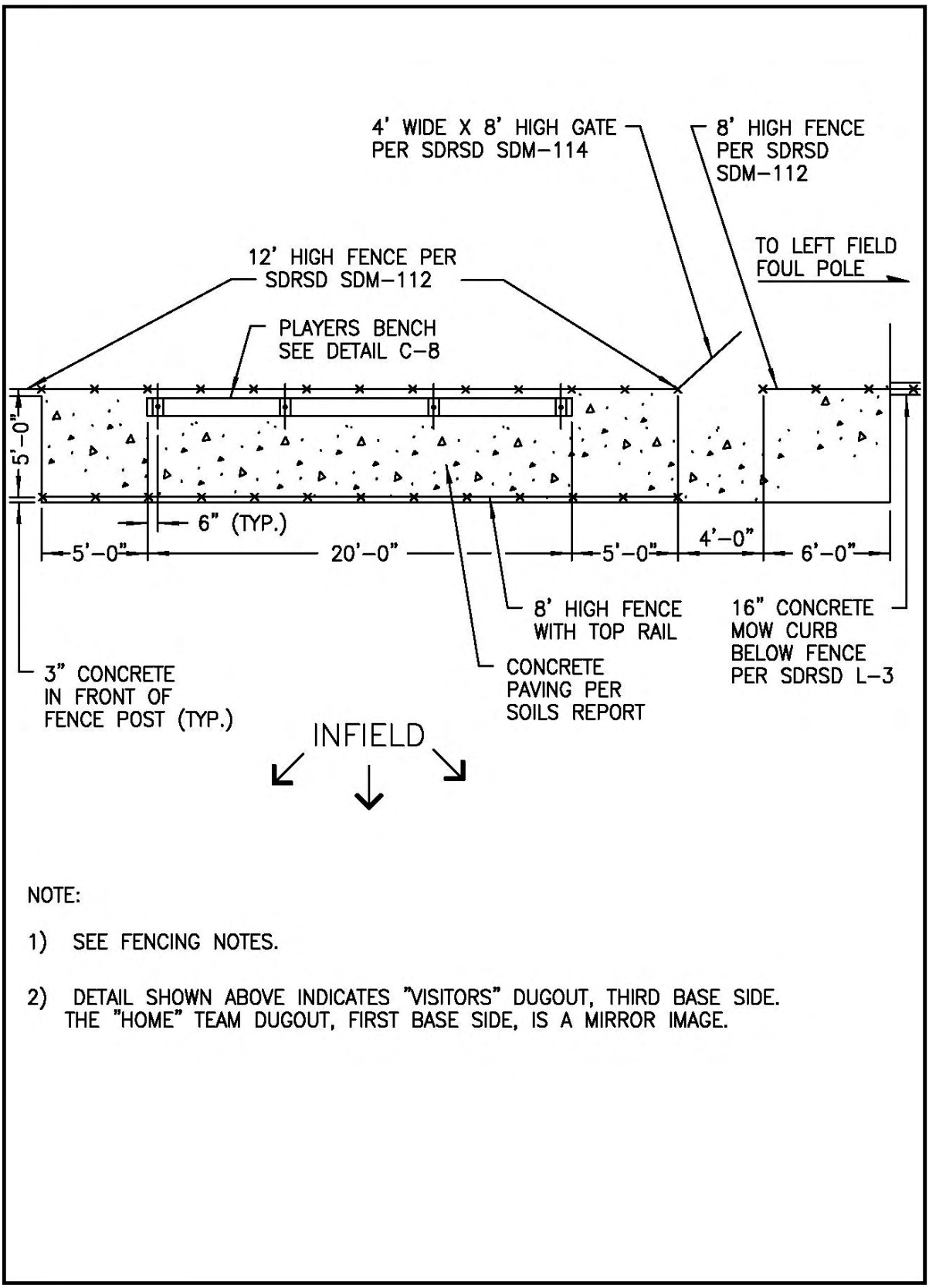

NOTE:

1) SEE FENCING NOTES.

2) DETAIL SHOWN ABOVE INDICATES "VISITORS" DUGOUT, THIRD BASE SIDE. THE "HOME" TEAM DUGOUT, FIRST BASE SIDE, IS A MIRROR IMAGE.

Detail C-7: Softball Backstop Dugout - Plan View

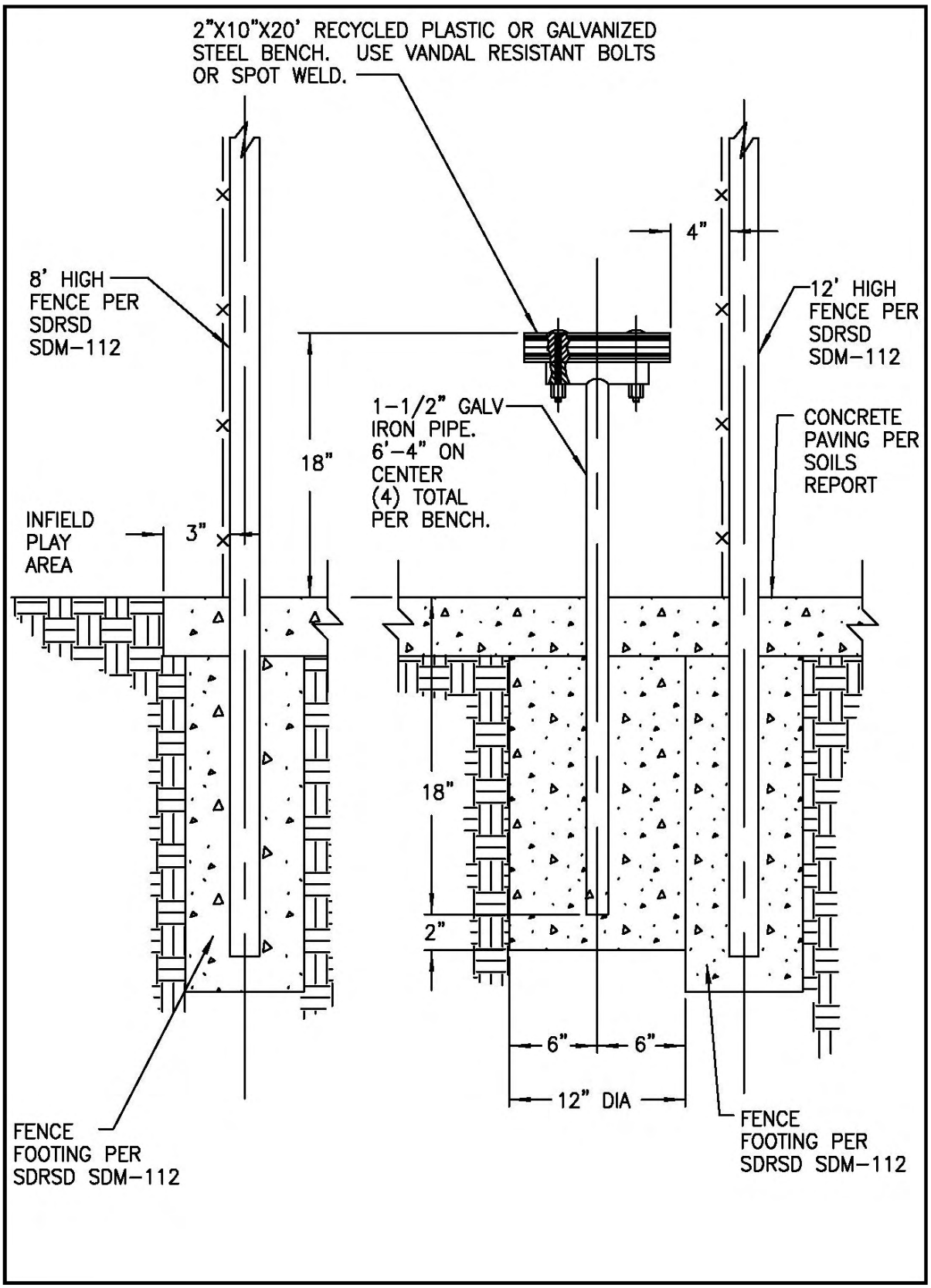

Detail C-8: Softball Backstop Dugout - Section View

BACK STOP NOTES:

1) WHERE BACKSTOP ABUTS ANOTHER CHAIN LINK FENCE, THE BACKSTOP SHALL BE PART OF THAT FENCE.

2) ALL UPRIGHT POSTS AND HORIZONTAL RAILS SHALL BE 2" NOMINAL DIAMETER GALVANIZED IRON WELDED (5/16" BEAD) ALL AROUND AT EVERY JOINT.

3) ALL MEMBERS OF THE TOP (ARCHES AND BRACES) SHALL BE 1-1/2" NOMINAL DIAMETER GALVANIZED IRON PIPE WELDED (5/16" BEAD) ALL AROUND AT EVERY JOINT.

4) CHAIN LINK FABRIC SHALL BE 9-GUAGE STEEL WIRE GALVANIZED AFTER FABRICATION, EXCEPT THAT THE LOWER 4' OF THE BACKSTOP SHALL BE 6-GAUGE STEEL WIRE GALVANIZED AFTER FABRICATION. ALL CHAIN LINK FABRIC SHALL BE 2" MESH.

5) CHAIN LINK FABRIC SHALL BE MOUNTED ON THE INSIDE OF THE BACKSTOP.

6) ALL WELDED JOINTS SHALL BE WIRE BRUSHED CLEAN AND PAINTED WITH TWO (2) COATS OF ZINC OXIDE PAINT ("GALVALOY" OR APPROVED EQUIVALENT).

7) ALL NUTS SHALL BE CUT TWO (2) THREADS ABOVE THE NUT AND PEEN ENDS.

8) ALL WOOD TO BE DOUGLAS FIR "SELECT" WITH NO KNOTS, SPLITS, OR SAP POCKETS. BOARDS SHALL BE STRAIGHT AND TRUE.

9) ALL ANGLE IRON SHALL BE GALVANIZED.

10) ALL CONCRETE SHALL BE PER THE SOILS REPORT.

11) BOTTOM RAIL OF BACKSTOP SHALL BE A MAXIMUM OF 1" ABOVE FINISH GRADE.

12) BATTER BOARDS SHALL COVER INSIDE OF CONCRETE SLAB AND EXTEND INTO FINISH GRADE OF INFIELD SOIL MIX.

Detail C-9: Softball Backstop Notes

FENCING NOTES:

1) GATES SHALL HAVE STOP PLATES AND WELDED LATCHING.

2) ALL CHAIN LINK FENCE FABRIC SHALL BE 9-GAUGE WIRE, 2" MESH GALVANIZED.

3) ALL CHAIN LINK FENCE FABRIC, POSTS, RAILS, AND FITTINGS, EXCEPT BACKSTOP, SHALL BE BLACK VINYL COATED.

4) ALL CHAIN LINK FENCE SHALL HAVE A TOP AND BOTTOM RAIL. CHAIN LINK FENCE SHALL BE CONSTRUCTED WITH A MID-RAIL IF TALLER THAN 8'.

5) ALL CHAIN LINK FABRIC SHALL BE MOUNTED ON THE SIDE OF THE POSTS TOWARD THE PLAYING FIELD.

6) ALL FENCE POSTS, BRACES, AND RAILS SHALL CONSIST OF NEW GALVANIZED PIPE MANUFACTURED IN ACCORDANCE WITH A.S.T.M. DESIGNATION A-120 AND SHALL BE THE FOLLOWING SIZES AND WEIGHTS BELOW:

FENCES 72" HIGH AND OVER:

POST LOCATION	NOMINAL DIA. IN.	OUTSIDE DIA. IN.	INSIDE DIA. IN.	WT. PER FOOT LBS.
END AND CORNER	2-1/2	2.875	2.469	5.79
LINE POSTS	2	2.375	2.067	3.65
BRACES & RAILS	1-1/4	1.660	1.380	2.27

FENCES LESS THAN 72" HIGH:

POST LOCATION	NOMINAL DIA. IN.	OUTSIDE DIA. IN.	INSIDE DIA. IN.	WT. PER FOOT-LBS.
END AND CORNER	2	2.375	2.067	2.65
LINE POSTS	1-1/4	1.900	1.610	2.72
BRACES & RAILS	1-1/4	1.660	1.380	2.27

7) ALL HARDWARE, TENSION WIRE, TIE WIRE, TRUSS RODS, AND GATES, SHALL CONFORM TO THE APPLICABLE PARTS OF STANDARD DRAWINGS SDM-100, SDM-112, M-5, M-6, M-17, SECTIONS 206-6 AND 304 OF THE STANDARD SPECIFICATIONS FOR PUBLIC WORKS CONSTRUCTION ("GREENBOOK").

8) ALL NUTS SHALL BE CUT TWO (2) THREADS ABOVE THE NUT AND PEEN ENDS.

Detail C-10: Softball Backstop Fencing Notes

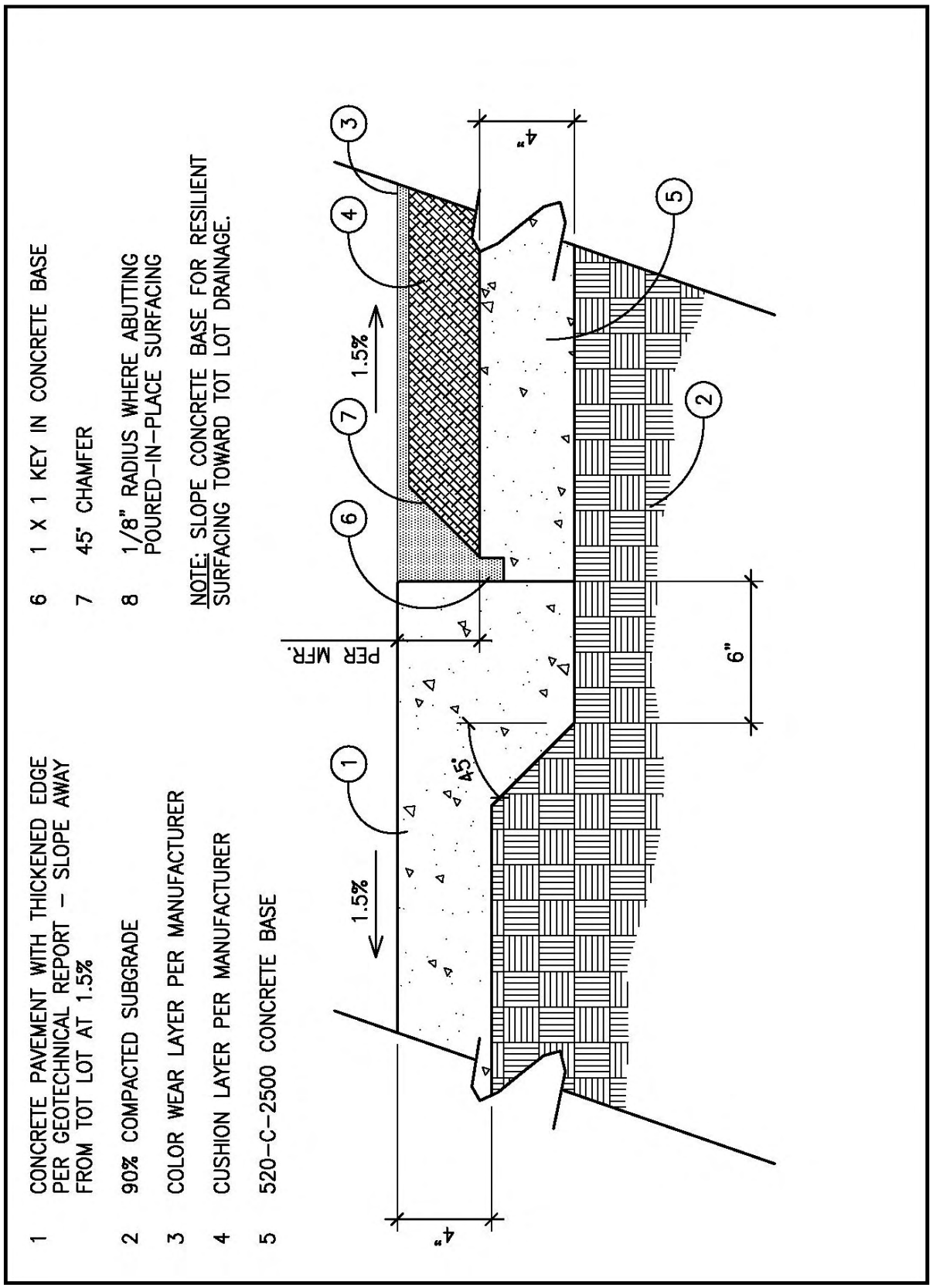

Detail D-1: Tot Lot Surfacing - Section View

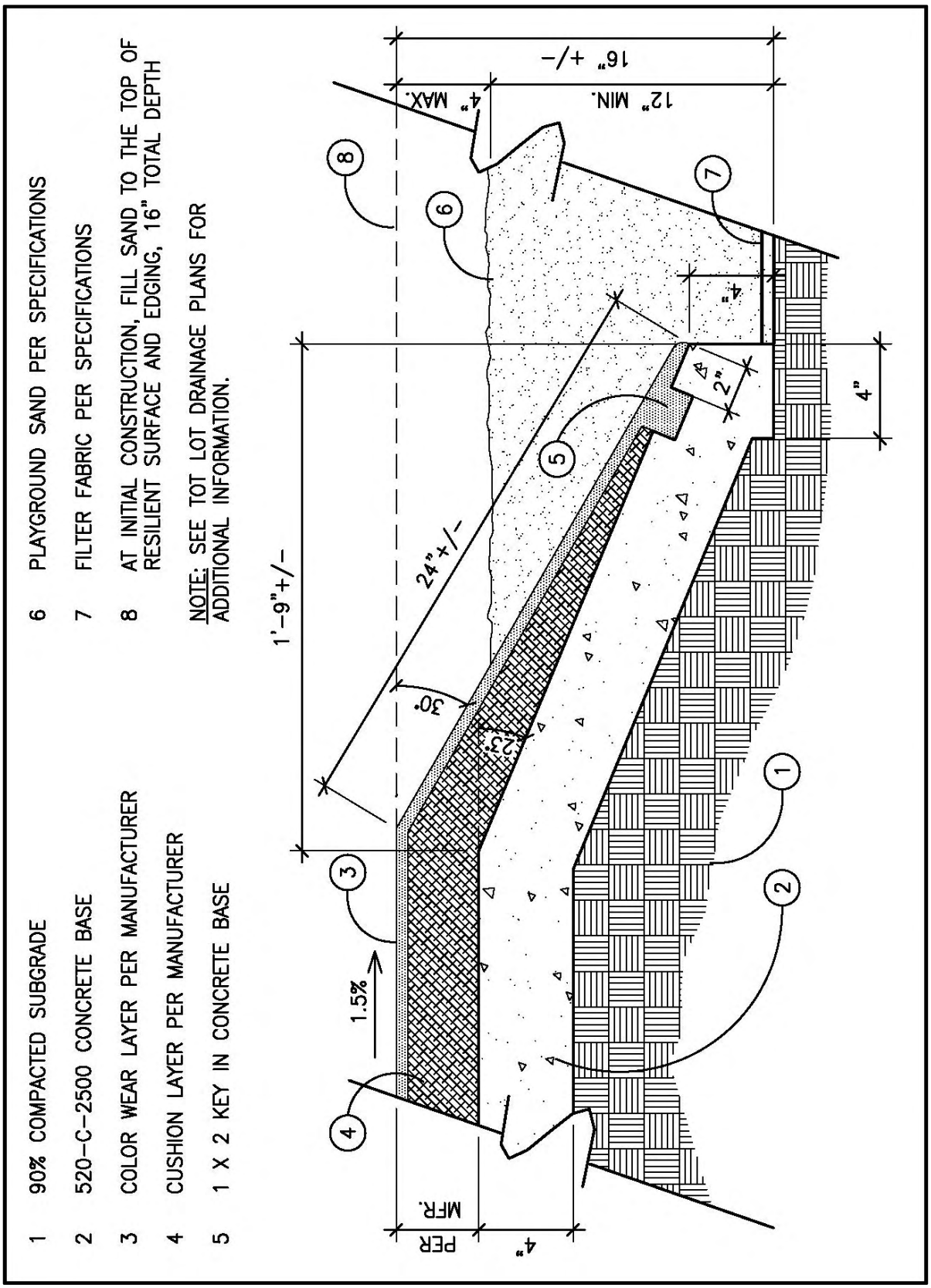

Detail D-2: Tot Lot Surfacing Turn-down – Section View

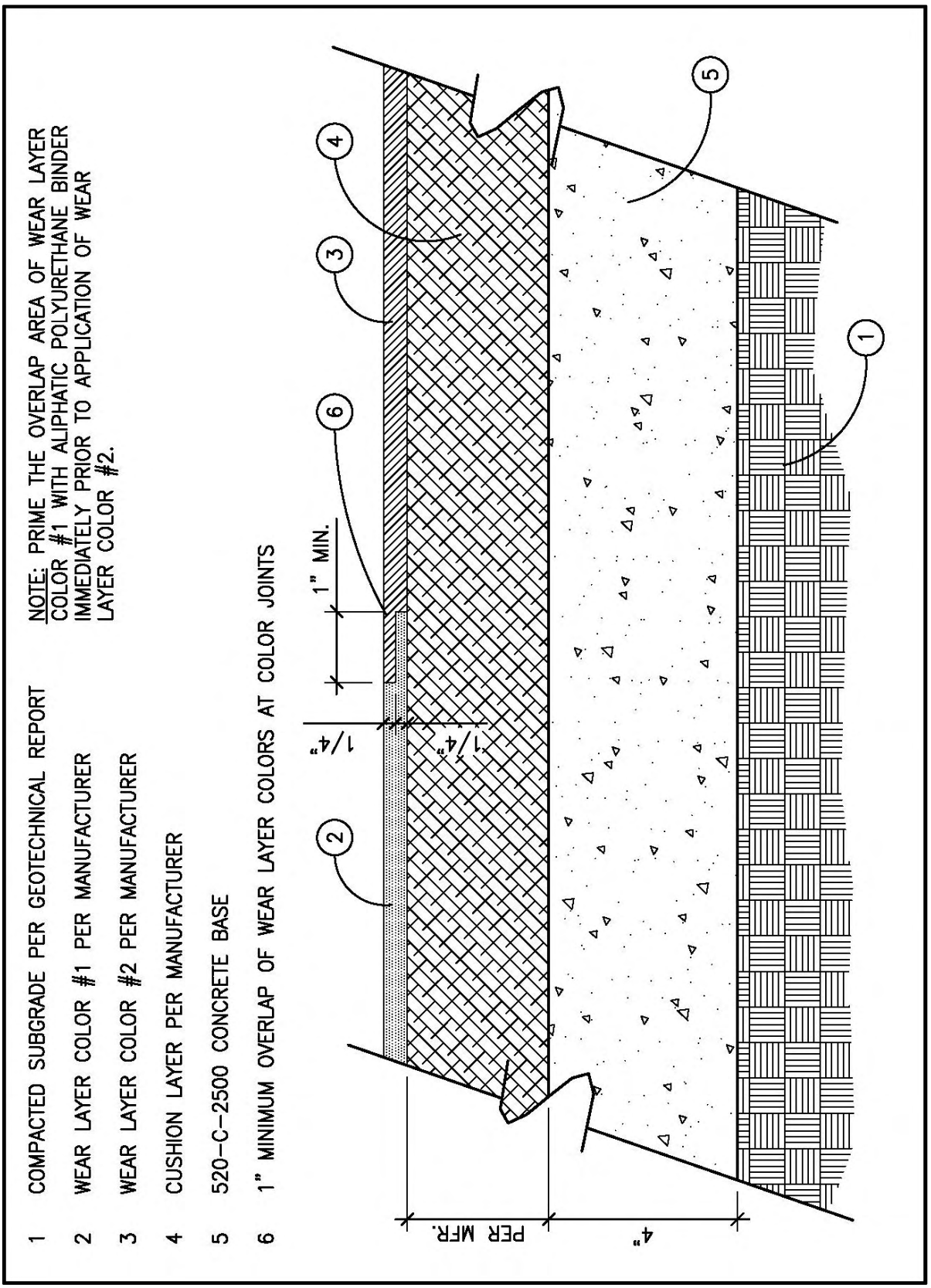

Detail D-3: Tot Lot Surfacing Color Joints - Section View

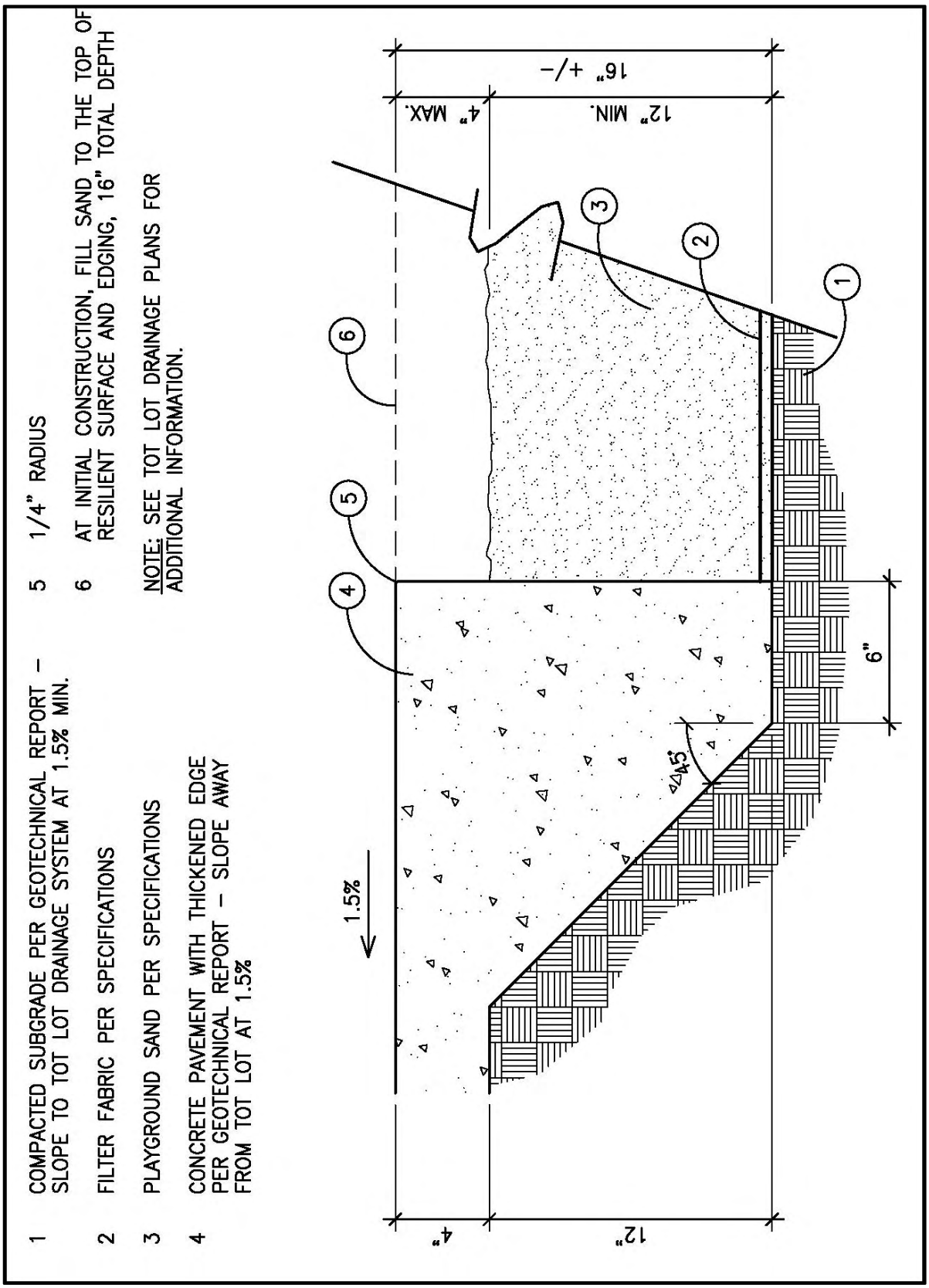

Detail D-4: Tot Lot Edging at Sand - Section View

DISAPPROVED PLAY EQUIPMENT

Manufacturer	Component
All	Tunnels (slides or level)
All	Plexiglass or lexan bubble or window panels
All	Metal mesh roofs
All	Multiple piece spiral slides
All	Web or cargo net climbers with vinyl coated chain, or cable-core rope
All	Vinyl coated swing chains
Burke	Genesis line
Burke	Spiral Climber
Burke	Mirror Panel
Burke	Steering Wheel with Window
Burke	Pipe Slide
Burke	Carousel
Burke	Rock-N-Rides
Burke	Little Digger
Gametime	KidTime line
Gametime	Pentes Play line
Gametime	Expanded metal decks with vinyl coating
Gametime	Piston Panel
Gametime	RaceTime, Mini-Bus, Fire Engine and Rescue 911 panels
Gametime	Wavy Mirror Panel, Flat Mirror Panel, Flat Window Panel, Paint Time Panel
Gametime	Bannister Rails
Gametime	Bucket Seat for swings
Gametime	Rubber spring riders
Gametime	Handi-Swing Seat and PowerScape HandiSwing
Gametime	Scrambler Whirl
Landscape Structures	Ribbon Slide
Landscape Structures	Maze Tilt Table
Landscape Structures	Permaline Spring Riders
Landscape Structures	Mirror Panel, Slant Window, Gear Panel, Ball Maze Panel
Landscape Structures	PlayOdyssey Roof
Little Tikes	Climbing Net
Little Tikes	Curved Climbing Wall
Little Tikes	Cargo Bridge
Little Tikes	Suspension Bridge
Little Tikes	Bannister Rails
Little Tikes	Mirror and Bubble Panels
Little Tikes	7-Station Play
Little Tikes	Duraglide Swing Seat

Manufacturer	Component
Miracle	Expanded Metal Decks with vinyl coating
Miracle	Miratherm
Miracle	Stainless Steel (multiple section) Slide
Miracle	Clock Panel
Miracle	Mirror, Bus/Truck/Flyer Panels
Miracle	Wall with Seat
Miracle	Tot Seat # 297 with chain
Miracle	Therapeutic Seat
Miracle	Paint Easel Panel
Miracle	Sloped Double Rail
Miracle	Pony Express, Mustang Whirl, Junior Whirl, Lifetime Whirl, Apollo Whirl, Galaxy Whirl
Playworld Systems	Bannister Slide
Playworld Systems	Clock Activity Panel
Playworld Systems	Driver Panel
Playworld Systems	Shifting Sands, Wavy Maze, Pachinko Panels
Playworld Systems	Aluminum Spiral Slide
Playworld Systems	Bubble and Look-Down Panels and Barriers
Playworld Systems	Accessible Swing Seat
Playworld Systems	Adult Rigid Swing Seat
Playworld Systems	See-saw
Playworld Systems	Reinforced Rubber Swing Seat
Playworld Systems	Modular Wood System
Playworld Systems	High Density Plastic Spring Riders
Playworld Systems	SkyTowers System

JOINT USE CHECKLIST

The list below serves as a resource for the design of joint use areas. While the items included are not exhaustive, they will aid in the design of joint use areas and allow the City timely reviews/plan checks if they are accommodated. Please note that each joint use site is different and this checklist is for reference only.

The criteria below are based upon a Memorandum of Understanding (MOU) dated December 31, 2002, entered into with the San Diego Unified School District. Joint use areas with other entities shall follow the same general criteria.

1. General Plan Standard Information

a. Joint use sites are considered similar in nature to neighborhood parks with respect to service radii outlined in the Recreation Element of the City of San Diego General Plan. Joint use sites are to be for active play, preferably for programming purposes. Passive use areas within joint use sites shall be kept to a minimum and shall only be included with the approval of the Park and Recreation Department.

2. Joint Use Field Size Criteria

a. Two (2.0) acres of turf is the standard minimum configuration to accommodate multi-purpose play.

b. If 2.0 acres cannot be achieved, the City will evaluate proposed joint use sites of between 1.5 acres and 2.0 acres of turf on a case by case basis. Joint use sites of under 2 acres require a higher level of maintenance.

c. Joint use sites of under 1.5 acres must be approved by the Park and Recreation Department. Synthetic turf surfaces shall be considered for sites of 1.5 acres and smaller.

3. Public Input Process

a. City Project Manager shall take joint use project to the appropriate Park and Recreation advisory bodies for review and approval following the typical process for park CIP projects, except:

i. The Design Review Committee (DRC) does not need to review simple turf joint use improvements. Should the proposed improvements include such items as a comfort station or other park-like facilities, it shall be reviewed by the DRC upon direction of the Park and Recreation Department.

ii. The project only needs to be presented to the Mayor's Committee on Disability should it include parking, a comfort station, significant grade changes or other significant park-like improvements.

iii. Presentation to the Park and Recreation Board will not be necessary unless directed otherwise by the Park and Recreation Department.

4. Joint Use Limits/Boundaries

a. Provide clear delineation of the joint use area as an exhibit to the joint use agreement.

b. The following are examples of amenities which shall not be included as maintenance items in the joint use agreement without approval from the Park and Recreation Department.

1) 2:1 slopes.
2) Trees.
3) Shrub areas and associated groundcovers.
4) Turf areas that exceed 5:1, are segmented from the main field area or that require hand mowing.
5) Stairs.
6) Walls.
7) Retaining walls.
8) Railings.
9) Arbors/Trellis.
10) Ball walls.
11) Enhanced paving.
12) Climbing walls.
13) Performance or stage areas/amphitheatres and associated walkways.
14) Play equipment and surfacing.
15) Black top for play.
16) Site furnishings, such as benches, picnic tables, bleachers, etc.

5. Restrooms

a. Comfort stations and restrooms shall be evaluated on a case by case basis and may be provided by the City or the joint use partner. Clear maintenance responsibilities shall be outlined in the joint use agreement.

6. Site Layout

a. Maximize the flat field area as much as possible.

b. Provide a concrete approach to a 12 foot wide access gate from a major street to gain access to the joint use area. This includes access for vehicles. An accessible route from the public way shall be included and shall meet all current ADA guidelines.

c. Provide pedestrian gates (four feet wide, minimum) in joint use areas next to City parks or other open space so users can pass between areas.

7. Parking

a. If parking is included in the Joint Use area, provide ADA/Title 24 access from the joint use parking lot to the joint use field area. Parking shall only be included upon approval of the Park and Recreation Department.

8. Site Amenities

a. Provide a free standing drinking fountain (ADA/Title 24 compliant), accessible by those using the joint use fields during non-school hours and on weekends, if one is not accessible on the school buildings.

b. Access to site amenities shall comply with current ADA requirements.

TRAIL POLICIES AND STANDARDS

OPEN SPACE DIVISION

October 4, 2010

1. INTRODUCTION

To identify and quantify trail standards, a basic classification based on existing use, projected use, and demographics specific to the area must be identified. Trail use, alignment, and classification will be consistent with Community Plans and other guiding documents. While most of the existing trails provide loops, and local destinations within the specific park units, many of these trails are within Open Space canyons that extend easterly to westerly. The majority of these Open Space canyons are currently managed by Park and Recreation staff. Many of these east / west canyons provide not only recreational hiking, biking, and equestrian trails, but commuter routes that are used by local residents. Additionally, many of the smaller Open Space canyons that are not under the direct management of designated Open Space units, have existing trails or paths that provide pedestrian and bicycle access to other parts of the City and the larger Open Space Regional Parks. Trails within the City managed lands will range from "primitive" (narrow, marginally improved) trails, to "improved" (wide, varying degree of improvements). The majority of the trails are existing use patterns and any improvements to match the trail classification will be implemented to improve safety, sustainability, and provide for protection of natural and cultural resources.

2. TRAIL CRITERIA

2.1 TRAIL DEFINITIONS

To be an approved/official trail, the trail must meet one or more of the following basic trail definitions:

2.1.1 Destination Trail: A trail designed to go to a specific destination. The destination may be a point of interest for scenic, educational, or activity-based purposes. The trail destination will usually include interpretive signage or other information.

2.1.2 Journey Trail: A trail that provides a route to pass through and enjoy natural areas without having a specific destination other than the trail itself.

2.1.3 Loop Trail: A single trail that provides a loop. This type of trail will usually have scenic or other characteristics, but may also be a short exercise trail.

2.1.4 Connector Trail: A trail that connects or links to another trail or trail system. This type of trail could also be part of a larger destination, journey, or loop trail, or may be the start or ending of an alternate transportation route.

Even if a trail comports with one of the above definitions, a trail will not be approved if it is redundant or if it serves only a single private property. For example, a destination trail for which the trail itself is the only destination may be redundant with another trail in the same canyon complex. Other reasons for not approving/accepting a trail into an approved plan include lack of legal public access, avoidance of environmentally sensitive areas, or other limiting factors.

2.2 TRAIL CONDITION CRITERIA

In addition to needing to meet one of the above definitions, the following Condition Criteria are also required:

2.2.1 Safety: Trail conditions that do-not present undue hazard to users. New trails will be designed and constructed to provide for safe use. For existing trails, identification and repair of identified hazards must be resolved using Best Management Practices (BMP) of trail, and trail structure construction.

2.2.2 Sustainability: New trails must be capable of being constructed and maintained in a self-sustaining manner (within reason) under adverse conditions. Existing trails must be improved to the highest level of sustainability using Best Management Practices except as described below. Water management and user management are critical components. Trails improved to the highest level of sustainability are also safe trails.

2.2.3 Non-compliant Trails: One assumption is that yet-to-be constructed, planned trails can and will be built in a safe and sustainable manner. A second assumption is that a number of existing trails require improvements (re-engineered, reconstructed or realigned) in order to become sustainable. Finally, some existing trails are not sustainable and cannot be re-engineered, reconstructed or realigned because of access or landform limitations. In this case some trails will be closed and some will be given extraordinary efforts towards retrofitting for improved but not total sustainability, as long as they are safe. Trails will be chosen for this extraordinary level of effort only if the trail meets multiple Basic Trail Definitions and is highly used by the public.

2.3 TRAIL CLASSIFICATIONS

2.3.1 Primitive Trails: These trails will vary in width, with a minimum trail base width of 48 inches. Actual used trail width may be less than this base. Minimum base is to accommodate maintenance needs, bi-directional travel, and provide safe passing space. These are trails that see limited use, are usually more difficult, with grades that may exceed trail standards, and are primarily for recreational users.

2.3.2 Moderate Use Trails: These trails will have a minimum trail base width of 60 inches. These trails may be multi-use, are destination-, journey, loop, or connector trails. These trails are usually less difficult with moderate grades (some exceeding trail standards), and usually will see multiple direction travel. Trail engineering and tread improvements

may include surfacing amendments, and structures for resource protection and visitor safety.

2.3.3 Utility Access Paths, Park Management and High-Use Recreational Trails: These trails are usually existing service roads that provide recreational trail corridors. These are normally destination-oriented, or connector trails. Most of these trails/roads provide access for park management staff (Park Rangers), and emergency response. Additionally, many of these trails/roads were originally constructed for utility access and maintenance (Public Utilities, SDG&E), and are still active for these uses. Width of these trails/roads will be no less than 8 feet, and will average 12 to 14 feet. Tread surface is usually graded annually by utility companies, with minor repairs and improvements made by Park staff (as needed). As these trails/roads are usually linear to the orientation of the Park, many local residents use these routes as commutes to and from work. Tread surfaces may be improved with the installation of surfacing material to reduce erosion, and provide for trail sustainability.

2.3.4 Circulation Trails: These trails are usually associated with transportation corridors, and are often incorporated into new developments. They vary in width from 8 – 14 feet, and normally have improved trail surfacing. Many of these trails that are adjacent to high automobile traffic areas will be separated from traffic flow by fencing or other barriers. Grades on these trails will generally be gentle; however trails adjacent to roads may exceed normal trail standards and be consistent with maximum allowable road grades.

3. TRAIL CONSTRUCTION STANDARDS

3.1 GENERAL

The majority of new trails within the City of San Diego are associated with new development. Many of the new housing development projects, as well as commercial developments, have a trail component. While most of these new developments have an integrated “internal” trail system, consisting of all levels of paths and trails (including sidewalks), they normally include trail connections to other existing trails and trail systems. The connection of new trails to existing City trails and trail systems will need to be approved by the Park and Recreation Department Open Space Division, and must be constructed to minimal City standards. These standards will reflect maximum user compatibility, safety, and resource protection. An initial premise in trail design shall be a design that facilitates multiple users. During the design process, site-specific characteristics (e.g., grade, site distance) may require a design that precludes certain user groups. Park and Recreation staff may close trails to certain user groups for safety purposes if post-construction usage is not safe. Additionally, as these trails will ultimately come under the jurisdiction of the City, it is important that they are constructed to the highest standards to minimize maintenance needs, protect and preserve sensitive natural and cultural resources, and provide for safe and enjoyable use.

New trails proposed to be constructed by the City of San Diego are usually associated with improving connections to existing trails and facilities, as well as to other trail systems. These new trails may be built "in house" by City Park and Recreation staff, or contracted out. In all cases, new trails will be constructed to City standards, and will be built to "Barrier Free" or ADA standards wherever possible.

Alignment of new trails (including trail realignments) will be to provide a route selection that is both safe and sustainable. Impacts to sensitive habitat should be avoided unless long-term sustainability requires impacting sensitive resources that will ultimately enhance long range resource protection and preservation. Additionally, if points of interest occur near trail alignments, it may be advisable to include these points of interest as trail amenities. Stream crossings, overlooks, and other locations should be considered for inclusion to the proposed trail to prevent unauthorized trail cutting to enjoy these locations. New trail alignments or trail realignments will comply with all local, State (CEQA), and Federal regulations and requirements.

All new trails must be consistent with General, Community, and Specific Plans, and meet all regulatory requirements.

3.2 BARRIER FREE TRAIL DESIGN AND ADA RECOMMENDATIONS

The following guidelines apply to new trail construction required to be accessible and to modifications to existing trails required to be accessible. See Draft Final Accessibility Guidelines for Outdoor Developed Areas. These are pending recommendations ("Proposed Guidelines" / ADAAG) that have not been adopted. City standards will reflect the final ruling when adopted.

New trail construction requires that all new trails are built to City Park and Recreation standards, and will be constructed to address issues of accessibility in accordance with local, state and federal law. While the City Trail Standards reflect the minimum construction requirements, specific conditions may be modified by agreement with the City of San Diego Park and Recreation Department Open Space Division.

Trails to be constructed as part of new developments, and connected to other existing trails or destinations will be built to ADA recommendations in accordance with local, state and federal law. All proposed trails associated with new development must be approved by the Park and Recreation Department's Open Space Division, and constructed according to approved plans. New trails that will not meet ADA recommendations will have an ADA component as part of the trail system in accordance with local, state, and federal law (viewing area, rest area, interpretive location). Access to all ADA compliant facilities shall be constructed to City standards.

3.2.1 Longitudinal Slope:

- 5% or less for any distance
- Up to 8.33% for 200' maximum With resting intervals no more than 200' apart
- Up to 10% for 30' maximum with resting intervals every 30'
- Up to 12.5% for 10' maximum with resting intervals every 10'
- No more than 30% of the total trail length may exceed a running slope of 8.33%

3.2.2 Cross Slope:

- 5% maximum

3.2.3 Width:

- Clear tread width: 36" minimum. (Note: It is recognized this width is less than the trail width guideline for new trails that will apply in addition to this minimum called out in the Barrier-free standards.)

3.2.4 Passing Space:

- Provided at least every 1000' where trail width is less than 60"

3.2.5 Signs:

- Signs shall be provided indicating the length of the accessible trail segment

3.2.6 Obstacles:

- inch high maximum (up to 3" high where running slopes are 5% or less)

3.2.7 Vertical Clearance:

- 120 inches for equestrians
- 80 inches minimum for hikers and bicyclists

3.2.8 Surface:

- Surface shall be firm for wheelchair use (compacted Class II advised)

3.3 GUIDELINES FOR NEW TRAILS AND MODIFICATIONS TO EXISTING TRAILS

The following guidelines shall apply to newly constructed trails and modifications to existing trails that are not required to be barrier free in accordance with local, state and federal laws.

3.3.1 Longitudinal slopes:

- Maximum average grade: 8% - 12.5%
- Maximum grade: 15% for 100 feet
  20% for 50 feet

3.3.2 Cross Slopes:

- Average cross slope: 2% - 5%
- Maximum cross slope at drains: 15% (gradational from average cross slope edges)

3.3.3 Tread Width:

- Primitive/Light use: Minimum constructed tread width of 48 inches
- Moderate use: Minimum constructed tread width of 60 inches
- High Use and Utility Access/Park Maintenance Paths that also serve as Trails: Minimum constructed tread width of 96 inches
- Trails in MHPA: Trails in core areas or wildlife corridors of the Multi-Habitat Planning Area (MHPA) the maintained trail tread will not exceed 48 inches in width.

Note: Generally, all trails should be brushed 1 to 2 feet beyond the trail tread. In the MHPA, where paths may not exceed 48 inches in width, brushing shall be limited to the 48 inch trail corridor.

3.3.4 Vertical Clearance:

- 120 inches for equestrians
- 80 inches minimum for hikers and bicyclists

3.3.5 Surfacing:

- If required/desirable based on site conditions (i.e. soil type, designated and type of use, ability of landform to drain), surfacing shall be Class II base (no recycled material) or well graded decomposed granite (DG). Minimum depth of six inches, compacted.

3.3.6 Elevation Changes:

- Elevation changes will use climbing turns where possible. If switchbacks are used, running lengths should be as long as possible. Steps **s**hall conform to step calculation standards.

3.4 ACCESS POINTS AND TRAILHEADS

All access to City owned Open Space will be from City owned land and public facilities or public access easement, and will provide access for all public users where appropriate. Trail use designation will reflect access point requirements. While most access points will be designated for limited shared use (mountain bikes / hikers), many will need to accommodate equestrians as well. Equestrian staging facilities will need to accommodate horse trailers, and sufficient area for ride preparation. Access points in many of the urban canyon areas will be from public streets, City parks, and other City owned and managed lands. Access from major Open Space Parklands is from identified staging areas, and recognized trailheads as identified in Park Master Plans and/or Park Natural Resource Management Plans, and Community Plans. As new developments adjoining these Open Space lands are completed, additional trailhead opportunities will be identified.

Access points to trail systems in both urban canyons and larger Open Space Regional Parks and developed parklands should be limited to specific points that provide safe and sustainable trail entry points. While many areas have well used access points from local communities, these

entry points should not be excessive. General requirements should limit trailheads to no closer than 0.25 miles. Some communities may have multiple access points within shorter distances to accommodate uses beyond recreational trail use. Connections to local schools, shopping, and alternate transportation uses may allow for spacing less than 0.25 mile. These closely spaced access points will need to be evaluated for criteria including; safety, sustainability, user volume, demographics, and justification of community needs. In some areas it may not be feasible to provide access at 0.25 mile intervals. Due to steep topography, sensitive habitat, dense vegetation, and private property issues, access points may exceed several miles. It is the goal of the Park and Recreation Department to provide the most reasonable, rational, and safe access to trails in Open Space.

The following items are basic guidelines for access locations. In many, deviation from these guidelines will require site specific evaluation for rationalization, and inclusion as approved trailheads.

- Access from identified trailheads and staging areas in Open Space parks
- Public access from streets, City parks, and other City owned lands
- Minimum 0.25 mile spacing (site specific)
- Safe / sustainable access (per trail standards)
- Reasonable access to existing trail system
- Specific use (recreation, alternate transportation, other)
- Recognized in Community or Park Master Plans
- New access to accommodate new trails in developing City areas
- Reasonable access for park staff to maintain and patrol as needed
- Appropriate signage

Additionally, efforts should be made to provide the highest level of access, including ADA components, at trailhead locations. As most City trailheads and access points normally drop into steep canyon areas that do not provide ADA opportunities (landform, vegetation, etc.), it is important to try to provide a reasonable trail experience for disabled users. These ADA trail components may be loop trails, or scenic overlook opportunities.

4. TRAIL CONSTRUCTION TECHNIQUES AND FEATURES

4.1 GENERAL/HISTORY

Existing trails that are currently managed by the City of San Diego were developed utilizing a combination of service roads, easements, game trails, and trails created by casual use (volunteer or social trails). These trails existed at the time of acquisition of those properties (for park and Open Space preservation) and, although many of these trails do not meet current trail standards, they became the core of the City's trail network. Over the last decade, Park Ranger staff, assisted by large numbers of volunteers and multiple funding sources, has, and continues to, successfully justify use of and improve those existing conditions to meet the safe and sustainable goals. The ultimate goal is the implementation of an organized trail system more in keeping with "Best Management Practices" consistent with National Park Service and

California Department of Parks and Recreation guidelines. In working toward this goal, the City is striving toward the improvement of these trails during routine maintenance, and will work toward "barrier free" trails wherever possible. Many of the existing trail alignments may not be favorable to total accessibility; however, ADA and Barrier Free construction will be implemented as opportunities allow.

Existing trails within both managed and unmanaged City lands vary. Trails may have evolved from game trails or casual use (narrow, single-track), or shared road or utility access (wide, 8 – 14 feet). These trails are usually accepted by the local community, and often as part of the community approved plans, as "the trail system". These trails may be in any condition, from poor to excellent, depending on level of maintenance. Level of maintenance is usually dictated by safety, resource protection, and public need.

Classification of existing trails is determined by the City of San Diego, Park and Recreation Department's Open Space Division, or sometimes by General or Community Plans, and community input. As use and demographics change in many locations, it is important to evaluate use designations, and change if necessary. As trails become a larger part of overall transportation within the City, as well as for recreational enjoyment, it is important to provide rational classifications and linkages to other transportation corridors and routes. Trails may provide for important alternate transportation (commuters), or casual interconnection within communities (schools, shopping, parks). As conditions change in many of our Open Space areas, either by increased use or level of connectivity, many trails will need to be modified to a higher level of accessibility. While these trails may become more and more important as alternate transportation, it is important to maintain the integrity of the natural landscape and to preserve and protect sensitive natural and cultural resources.

Trail standards for both new trails and existing trails may need to be modified for specific locations. Topography, soil types, vegetative cover, and adjacent development may affect design criteria. All trail alignments, or trail reconstruction must be approved by the Park and Recreation Department's Open Space Division.

A number of agencies including California State Parks, the National Forest Service, Bureau of Land Management (BLM) have developed "Trail Standards" that are consistent for their particular agency. However, many of these standards are not always effective in the Southern California region. Some of the major problems associated with specific regional conditions may require more inventive techniques in restoring and maintaining trail tread.

California State Parks has compiled one of the more comprehensive sets of standards and design guidelines in their "Trail Maintenance and Management" manual. While these standards and design criteria are considered the most applicable to this region, some modifications may apply to specific locations. Specifics addressed in this section use the California State Parks manual as baseline criteria. Soil types, vegetative cover, and precipitation in many areas of Southern California have considerably different characteristics than other areas within the State.

4.2 ACCESS PATHS AND TRAILS (UTILITY ACCESS AND EASEMENTS)

Throughout the Open Space lands within the City of San Diego, there are existing access paths and easements for utility service (Public Utilities Department, SDG&E, etc.). Many of these access paths have been adopted by the community as trails. In many cases these paths provide reasonable trail connections and linkages. As these paths are normally linear and bisect Open Space boundaries, they may provide excellent connections between developed areas of the City.

Whenever possible, and where conditions are favorable, improving these access paths to trail standards may be advised. Grade and out-slope for these paths should remain consistent with trail standards; however, width may need to be modified to accommodate utility service equipment. It may be advisable to improve surfacing to reduce wear patterns and minimize erosion. In most cases, minor modifications to tread design will reduce or eliminate significant erosion concerns.

Many access paths are sited in or near canyon bottoms. These locations must be addressed to eliminate erosion and siltation problems. Substantial siltation could potentially affect both seasonal and year-round water flows. Specific modifications to tread design, tread surfacing, specific erosion controls built into the path, and planting with native vegetation may be implemented to alleviate erosion. Additionally, many of these access paths/trails may be important for Park and Recreation, to provide access for Ranger patrols, maintenance, and emergency response. In cases where the need to maintain these trails for Park and Recreation use is identified, the width should be no less than 8 feet. In cases where Park and Recreation access is not required, it may be advisable to reduce the trail width through revegetation while still allowing occasional maintenance vehicle access. Decisions as to ultimate use and needs should be consistent with all regulatory requirements, community plans and other guiding documents, and meet the identified needs of all involved agencies and departments. Developing and modifying access paths to a shared-use may allow for the elimination of other trails or impacts to the land.

As many of the access paths located in Open Space areas may cross, or be located near, water courses it may be necessary to construct facilities to provide for long-term maintenance and public use. Improved facilities to be constructed may include bridges, retaining walls, BMPs, drainage and erosion controls, or other appropriate facilities. If these facilities are expected to be used by heavy equipment, appropriate design and engineering standards consistent with trail standards must be implemented. Engineering design standards are current California State Park approved standards, and are consistent to trail design standards. If paths/trails are to be used by multiple use-groups (disabled, equestrian, etc.) specific design criteria is required. Specific data as to construction standards is on file with the Park and Recreation Department's Open Space Division.

4.3 CONSTRUCTION ROADS TO TRAILS

Roads often need to be constructed in Open Space areas for maintenance or construction purposes. In many cases these roads are constructed for limited use during the duration of a specific project, and then will be utilized as a trail or as access for patrolling by ranger vehicles

Roads constructed in Open Space areas that will ultimately be used as trails need to be built to the same standards as trails. The only modification would be to the degree of out-slope (tilt away from uphill bank). Because of moderate use by medium to heavy equipment, it is often necessary to increase the "angle of out-slope" to compensate for compaction and general wear patterns. This out-slope will eventually settle into a slope more consistent to current trail standards. Careful assessment of soil types is important when designing road out-slope. If soil types are high in certain clays, excessive out-slope may create sliding hazards for heavy equipment. If these soil conditions are present, then a lesser degree of out-slope, or short in-sloping may be recommended. Degree of out-slope must also take into consideration, grade (or pitch) of road, anticipated water loads, and ability of the landform to naturally moderate water flow. Many areas experience rainfall events that are extreme, and may not show in normal data recording formats. Exceptional events that drop excessive amounts of rain within a short period of time may not show in standard records, and it becomes important to look for indications of these events. Also, information that can be obtained locally (park staff, local residents, etc.) may be valuable to determine the occurrence of extreme events.

Moderating flows at water crossings (gullies, ephemeral streams, etc.) should also use methods consistent to trail construction standards and practices. Increasing out-slope at approaches and at minor crossing is advised. Armoring these crossings may also be advised. Major crossings or ephemeral streams also may need increased out-sloping. Additionally, the "upstream" portion of this drainage may need erosion controls to moderate water flow impacts. Stacked "rubble" rock walls will moderate water energy, but still allow for flow. These walls should be constructed as shallow "U" shapes with the apex being toward the downstream side. Smaller crossings may also use this type of control. It may also be advised to install crushed rock as road base to allow drainage.

Climbing turns (resembling switchbacks) used to reduce grades need to be addressed as similar types of turns used in trail construction. At turns where water loads would impact the lower section of road using out-sloping, the profile of the road should be modified to an in-slope on the upper leg as the road approaches the turn. Water loads should then be directed away from the road at the apex of the turn. Selection of where the transition from out-slope to in-slope on the upper leg of the road will depend on site specific conditions. Outfall drains at the turns may need additional erosion controls to prevent erosion.

Roads graded for construction usually will be in excess of trail standards. If material is available, clear soil may be backfilled on the uphill side of the road to reduce width. Normally, time will reduce width with sloughing, and soils carried in water transport during rain periods, and the road will naturally narrow. If there are no constraints, trimming the downhill bank of the road may also be done to reduce width.

4.4 EROSION CONTROL TECHNIQUES

Soils in the San Diego region can be highly susceptible to erosion. Because of the sensitive nature of many areas, the addition of chemical amendments to the trail tread may not be advised. For modifications to existing trails, changes in degree of trail tread sloping, number of changes in sloping due to lack of cover (i.e.: watershed capacity), and drainage outfalls at switchbacks and climbing turns may be required. Additionally, while it is traditionally unadvisable to add organics to the trail tread, the use of cuttings from brush clearing or thinning to rebuild tread can be implemented in some cases.

Erosion controls for all areas should be consistent. This is especially important with trails, roads, and access paths. A basic understanding of what creates the greatest conditions for erosion is important. Two important factors remain consistent: Water Volume + Water Velocity = Erosion. If controls are constructed to break water flows, erosion will be minimized. Changes in slope or direction of travel will reduce velocities. Multiple controls will reduce both velocity and volume.

By looking at the surrounding landforms, it is necessary to identify how water moves across the land. If the trail / road / path intersects the normal flows, it is important to design (or re-design) these facilities to allow water to move in a fashion as close to nature as possible. With the exception of established watercourses, gullies, and other definitive water channels, water will normally “sheet flow” across the land. It is important to re-establish this “sheet flow” when designing or re-engineering trails / roads / paths. By designing trails with consistent out-slopes, water will shed off the trail in low volumes and velocities. If the landform itself is intact, the ability to absorb this water is increased.

Many of the trails and roads currently accepted as part of the City trail inventory consist of old scars that run down the fall line of slopes. Many of these sites are severely entrenched, and it may be difficult to direct water flows to sheet. In these and other extreme cases, “short water management” (managing water within short distances) is advised.

In areas where redirection to the sheet-flow concept is not feasible, the construction of silt dams, retaining walls, and well designed drains will moderate water flow is advised. On trails and roads that have long pitches where water cannot be redirected, a variety of options may be implemented. These include:

- Periodic water diversions and drains. These drains may provide an escape for redirected water, or may be designed as silt basins to capture transported material as water slows. These capture basins require maintenance to redistribute captured material and remain effective.

- Multiple cross slope changes. It is possible to change the cross slope of the trail or road, multiple times within short distances (20 – 50 feet). At each change water will slow and some transported material will fall out. Over a period of time, with maintenance as needed, this can potentially re-establish the topographic profile.

Multiple changes in direction increase length and reduce grade. Careful selection of trail direction changes may provide opportunities to augment erosion controls. Extreme care should be used to assure that water does not flow down the trail.

- Drain Dips. Drain dips and drain lenses can be constructed in areas where it may be effective to channel and redirect larger water flows. While these are very effective in managing water flow, it is important to reduce volumes and velocities as much as possible prior to drains.

- Swales and Culverts. These should be a "last resort" method of controlling water flows. Swales capture large volumes of water and channel them to a specific outfall. This increases volume and velocity, and may present a serious problem when dealing with unloading captured water. Swales are also normally rock lined. This rock will slow water sufficiently to allow transported material to fall out. If swales are not maintained, this material will block the swale and redirect water flow to paths of least resistance. Culverts are also problematic for the same reasons, with the additional problem of dealing with excessive water energy generated at the outfall.

- Silt Dams. May be constructed of rock, earthen, or straw waddles. In constructing large area silt dams, it is important to configure dam alignment to be effective. In general, dams should be constructed in a downhill "horseshoe" alignment, with the apex of the curve the desired flow pattern. By reconfiguring these dams during construction and maintenance, it is possible to stabilize large surface areas.

Many areas that have been designated as trails may be old scars from previous disturbance. Firebreaks, easement corridors, old grading scars that have expanded over time, and fire damaged areas may present large surface areas that are prone to erosion. If these areas have been accepted as trails it is important to stabilize the entire affected area as soon as feasible. The establishment of a trail within this disturbed corridor should meander as much as possible. In trail sections where there has been considerable erosion, and soil types are sandy or non-binding, the laying-in of alternating layers of vegetation mats (from cuttings), and soil has proven effective. Installation should consist of alternate layers of 4"- 10" cuttings covered with 12"- 16" soil, and thoroughly packed. Trail cap should be no less than 12" of soil. Properly implemented, this layering will stabilize soil migration and enhance bonding of soils as organic material breaks down. Settling of tread will occur as organics degrade, and periodic rebuilding may be required until tread stabilizes.

In some areas where soil migration (primarily sand) is a problem, native soils high in clay content may be added. The addition of inexpensive cat litter to sandy conditions has also been successful in stabilizing soil migration. Areas of high erosion may also require more aggressive trail out-sloping, or multiple changes in trail slope within short distances.

In-sloping and out-sloping of trails in areas susceptible to high erosion may have to be more aggressive to sheet water off the trail surface quickly. Additionally, in areas where consistent

sloping is not possible, multiple changes in slope within shorter distances may be necessary to move water off the trail tread (rolling slope). Special care should be taken to assure water outfalls (drains) are well armored and disperse water quickly. Focused water at drainage outfalls will cause rapid erosion.

Natural and manufactured polymer binders, soil cement, and clay amendments have been successfully implemented to stabilize and harden trail surfaces.

The use of water bars is not advised in areas where serious erosion is a problem (both trail and surrounding area). Water bars tend to clog rapidly or be affected by serious down-cutting at the outfall. Construction of "drain dips" at water-bar locations is an effective control to break and disperse water flow. If water bars are to be used until the trail surface can be properly engineered, multiple, closely spaced bars may be needed to control flow. These water-bars should be used as a temporary measure only.

4.5 TRAIL TREAD SURFACING MATERIAL

Trail tread surfacing can range from unimproved natural soils to hardened / stabilized material. It is important to remember that the trail is to be an integral part of the natural landform, and should not substantially change natural landform characteristics. The ability of the trail tread to allow some water percolation into the watershed is also important.

Trail surfacing material may be needed for high use, improved accessibility (ADA), specific user groups (bikes, equestrians, etc.), or to reduce or eliminate erosion. Various grades of DG (decomposed granite) are often used; however, a Class II, or Type II road base is preferable (no recycled material). DG may be used if it is well graded and the color is consistent with surrounding landforms. These materials are made of graded material, from very fine to coarse, and tend to lock and bind better than single grade aggregate materials. If Class II road base or DG is properly compacted the tread will remain sustainable even at grades exceeding trail standards (providing all other trail criteria are consistent to standards). With proper out-sloping, in-sloping, and slope reversals (rolling grade), a compacted Class II base trail tread will remain sustainable under high use and moderate to heavy rain events.

Often, trails may see very high-use by multiple user groups. Circulation trails and some high-use Recreation trails may need a soil stabilizer to bind the tread surfacing. Soil stabilizers can include, natural or chemical polymer binders, soil cement (Green Book), clay, lime or salts. Some of these stabilizing treatments may not be compatible with sensitive natural resources, and careful analysis of an additive must be assessed before installation.

4.6 TRAIL GRADES

Range of trail grades are affected by trail type and projected use, soil types, and general landform characteristics. Generally, some amount of grade should be considered for all trails to reduce erosion by enhancing water movement and management. See Guidelines for new trails and modifications to existing trails section for grade guidelines.

Classification of trail type, and expected user group may allow some latitude in determining grade. While bikers (and some hikers) may find grades exceeding 12.5% difficult, equestrians my find grades up to and beyond 25% as acceptable. Additionally, classification of trails (primitive), and designated user group (equestrian, difficult hike, technical bike) may be critical factors on determining grade.

New trails in the City of San Diego should be aligned at the recommended grade range of 2% - 12.5%. Any grades exceeding 12.5% must be approved by City staff trained in trail design and engineering to assure safe and sustainable alignment. While long-term sustainability is crucial, visitor safety must be maintained.

4.7 SWITCHBACKS AND CLIMBING TURNS

While switchbacks are not advisable when designing a trail with rapid changes in elevation, many existing trails do utilize this design. Because it is often impossible to redesign these trail sections, special care must be taken to manage these turns. If possible, redesign of turns, to more geographically friendly climbing turns, is preferable.

Careful assessment of switchback alignment is important in this region. Because of heavy rainfall events and the potential for serious erosion, water management on the trail tread is critical. Changes from out-slope to in-slope when approaching turns must be assessed to determine proper location. The transition zone (from out to in) will often act as a water bar when water flow is heavy. Care in selecting a location where water drains from this point must take into consideration the ability of the surrounding landforms to handle substantial water flows. Selecting areas with heavy vegetative cover or rocky, broken surfaces (to break water energy) will help minimize erosion at these points.

Outfalls, or drains at the apex of turns must also be critically assessed. Often, these turns will still dump water to the segment of trail below. This may mean that the in-sloped leg of trail in this section must be shortened to minimize water loads. Additionally, drainage design must effectively break water energy rapidly and disperse water before the next trail leg. A “Herringbone” design of small water bars may help direct water flow from channeling at the drain. If erosion channeling is already evident, a series of retaining walls may be used to break water flow and drop out transported soil. This will also help to rebuild the erosion channel.

Other problems commonly associated with trails utilizing multiple switchbacks and even climbing turns, are hikers cutting the trail. Due to the sensitive nature of regional vegetation, cover is lost quickly in these sections, and the ability of the landform to moderate water is compromised. In areas affected by serious cross traffic, erosion often becomes a major problem, and may affect the out-slope design. Substantial retaining wall construction may be needed to not only keep visitors “on-trail” in these areas, but to break water flow. Additional retaining walls may need to be built within these sections to moderate both human use and water flow. Rock construction is preferable, as some water will still pass through structure, but slowing flow enough to drop out transported material. Rubble type walls are effective in the

interior of these cuts as well. In extreme cases, where cut-across areas are extensive, other barriers may be necessary (fencing, signage, etc).

Whenever possible, trail design to deal with moderate to severe elevation changes should use climbing turns instead of switchbacks. In many locations, topography may allow for some realignment of existing switchbacks to climbing turn configurations.

4.8 STEPS AND STAIRS

If elevation changes are too steep to construct trail within grade standards, steps or stairs may need to be considered to make the elevation transition. There are several types of these facilities that can be installed. Step configurations may be full-cribbed, partial-cribbed, cut-out stringer, un-cribbed (free-standing), and cable steps. With the exception of cable steps, all of these structures can be constructed of either wood, rock, or appropriate recycled material. Due to severe erosion many trail alignments have degraded to the point where steps are required for safety, as well as stabilization and protection of natural resources. Steps or stairs may be advised in some new trail construction to prevent degradation of landform, and visitor safety.

Steps must be constructed to engineering standards wherever possible (rise and run). If the site will not accommodate standard construction, step modifications may be acceptable upon inspection. Longer runs, or landings, are typically constructed for trails that may be used by horses, or in areas where long grades exceed advised step, run limits. Changes in design must be approved by the City Park and Recreation Department Open Space Division staff before installation. The addition of transitional landings within the step carriage may be constructed to accommodate excessive length of runs, and to break change in dissimilar landing designs. The most important factor is to provide uniform rise and run throughout step alignments.

Prior to construction of steps, the site must be surveyed to determine structure configuration. This is done by calculating the rise and run of the site. Rise will be the total elevation gain (vertical distance) to be achieved. Run is the total horizontal distance to make this elevation change. Average acceptable rise standards are 7” – 9”. Acceptable length of runs (or landings) is 13” – 18”. To calculate needs, divide the total vertical rise by 7” or 8”. This will determine the number of rises within the alignment. Subtract 1 from this number for the number of landings. Divide this number into the total length (horizontal distance). These are your runs (landings). If possible, adjust the total run length to conform to run standards.

4.9 BRIDGES & PUNCHEONS

The majority of water flow in the region tends to be ephemeral; however, as the region continues to develop, much of this seasonal flow has changed to “year-round” flow due to increased irrigation and hard surface runoff. Because the type of rainfall experienced in this region often tends towards heavy rain events of short duration, the water flow can be extreme at times.

Site assessment of location for bridges or puncheons must be carefully considered to determine suitability of construction. If locations for this type of construction (puncheons particularly) are being considered, it is important to look at flood event history at the site. Careful assessment of the watershed and the potential for high-energy water flows may make use of structures inadvisable. The construction of Arizona style or ford crossings is preferred in these areas.

If puncheons are to be built, assessment of end member (mud sill) placement is important. Bank integrity, stream channel geography or alignment, or potential for migration of flow during large events, must receive careful consideration. If the site location appears to be fairly stable, and flood, or flow, history indicates the location does not experience much alteration, puncheons may be constructed. Anchoring one end of the structure may be done to secure the structure in extreme events. This will allow the puncheon some flexibility as it will swing away during these events, and can be relocated afterward.

Bridge construction in the region requires similar assessment as puncheons, however most bridge locations are normally in relatively stable flow areas. As local geologic conditions vary considerably in the region, assessment of bridge foundation is important. Soil types or integrity of geologic structure for bridge footings may be questionable. In these areas the use of pilings for primary bridge support may be advised. Due to high erosion potential, bridge foundations and approaches may be compromised over time and not provide effective support. There are a variety of bridge configurations and material types that will address specific crossing needs and environmental constraints.

4.10 DRAINAGE

Due to the nature of regional rainfall, trail structure, and soil types, drainage concerns may require more extreme methods to manage water flow and minimize erosion. As previously stated, the arid nature of the region (sparse vegetation), violent rainfall events, and highly erosive soils requires careful “site specific” assessment when constructing drains.

Erosion is the primary cause of trail damage. Water volume + water velocity = water energy (i.e.: erosion). As water moves down the trail and increases in energy, it erodes material from the trail. As more material is added to the moving water, it becomes more effective at cutting more resistant materials. The longer and faster the water moves down the trail, the more erosion. By slowing and/or effectively diverting the water, the erosion process can be controlled.

Drainage on trails in this region is best accomplished with well designed “out-sloping” or “in-sloping” (at turns). State Park guidelines advise tread slope from 2% to 10%. This guideline is effective in new trail design, and long-term maintenance level tread surfaces, however higher percent grade may be required in some areas. Trails that have extreme pitches (grades), and suffer from high-energy water flow may require a more aggressive out-sloping to manage water flows. Installation of drain lenses, or large-area drain-dips may allow for reducing out-slope. Some trails may require out-sloping in excess of 15%-18% to stabilize tread and manage water flow. Extreme cross-slopes are normally associated with short-term stabilization, and should be

modified to recommended standards as soon as feasible. Long pitches of steep grades that are carrying large water loads may still require steep out-sloping. This cross-slope must be designed so that it does not become a safety issue for trail users.

All constructed drains need to be well rocked, unless the landform can withstand water loads. When constructing drainage lenses or drain dips within the run of the trail, the area selected should be of large enough area to disperse water energy effectively. Focused drains, as in water-bars, tend to either clog rapidly, or create erosion problems at the outfall. Depending on pitch (steepness) of trail grade, and length, it may be advisable to add multiple drainage structures throughout the section. By adding drain-dips in a steep section of trail, water energy can be minimized. As the water slows, any material carried in transport drops out. Careful placement of drain-dips can actually result in adding material to the trail tread as it drops from the slowing water.

4.11 ROCK CONSTRUCTION

Use of rock structures in this region is preferable to wooden or other structure, as it will last forever (if done correctly). Construction of rock steps, rock walls, and rock foundations are not only durable, but also aesthetically attractive. Several types of rock construction are used in this region, and may depend on available materials. Stacked rubble walls can be used for erosion control and as retaining walls in relatively flat areas. Fitted rock wall, steps and foundations are done without mortar or cement, and are dependent on careful selection and placement of rocks. Rock walls (both rubble & fitted) need to have the proper amount of layback to function properly. Structural foundations, such as bridge footings, also need proper layback and placement. Rock steps need to be constructed using engineered step calculations, and correct sizing and fitting of rock.

Rubble, or stacked rock walls can be used as erosion controls and as retaining walls for trails or other structures. This type of wall serves well as an erosion control as it will allow some water flow, but will control high-energy water flows. By reducing water energy, transported soil material will drop from suspension in water and rebuild areas where soil has been lost. These types of walls are usually out of areas of visitor traffic and may be loosely constructed. Rubble / stacked walls used as retaining walls for trails or other facilities where visitor use is anticipated, need to be constructed so they will withstand more severe impacts. This construction need to be fitted to some degree to allow interlocking of rock. Construction needs to begin with large rocks for base material, grading to smaller material near the top. Small rock and fragments of rock should be used to chink openings between larger rocks and will further lock in the structure. Friable (easily broken) rock works well for chinking. If being built to retain any fill material, the wall needs to have sufficient layback against the weight of this fill.

Fitted rock-walls, foundations, and step carriage components need careful selection and fitting of rock. This type of work can be mortared or cemented in place if needed, however properly constructed rock structures normally do not require this unless there are difficulties in securing structure to bedding. Fitted rockwork needs to meet requirements of secure bedding, good edge contacts, and careful “breaking” of all joints. Sufficient layback of these structures is

important, with those structures built on sloping ground needing more pronounced layback. Chinking of gaps is advised with fitted rockwork, as well. This will enhance locking of larger rocks. Secure locking of cap rocks is also important, especially on retaining walls where visitors may dislodge them.

Rock steps require careful selection and fitting also. Rocks used for step construction need to be of sufficient size (> 80 lbs.) so they cannot be dislodged from set locations. It is also important to lock all edges so steps remain secure. Proper engineering of the step carriage is important. Wherever possible, step carriages should conform to engineered standards (rise & run). Some step carriage locations may not fit within standard calculations. If it is necessary to construct steps that cannot conform, it is important that all steps within run are uniform in both rise and run.

4.12 RETAINING WALLS

Retaining walls may be constructed for various reasons. Stabilization of slopes for resource protection and visitor safety, bridge and other structural foundations, and erosion control and capture of sediment may require retaining wall structures. Landform compatibility must be assessed prior to construction to determine suitability.

Retaining walls may be constructed of rock (fitted and stacked), manufactured block, lumber, or recycled construction material (Trex, etc.). The purpose of a retaining wall may dictate engineering standards for construction. Smaller walls built for minor erosion controls, trail edge stabilization, minor bridge and puncheon structures, and some of the less significant slope failures may not require extensive engineering; however, major structures may require construction to more severe engineering standards. Walls three feet and shorter as measured from the top of the footing to the top of the wall may be constructed without permits. Walls greater that three feet in height or supporting a surcharge will require a permit through the Development Services Department.

Correct degree of lay-back when constructing retaining wall is important. Additionally, construction of interlocking components of wall structure will increase load and holding capacity. Design plans for these structures are on file and available as needed.

In some cases, where retaining walls are to be constructed as a condition of other major facility construction, specific engineering standards may apply. As many walls may require substantial alteration of existing landforms, it is important to have a thorough understanding of constructions, and adherence to any regulatory guidelines or restrictions.

4.13 BRUSHING (TRIMMING)

Brushing, or trimming, is usually the highest maintenance task for most trails. Clearly defined trail corridors are crucial to safety, and may be critical to maintaining tread design and function. Trails not sufficiently brushed decrease line-of-sight, which increases potential user conflicts. Additionally, trails that become heavily brushed-in may cause users to "go around" vegetation and degrade the trail by creating a new, erodible, trail tread.

In this region brushing should be done annually in areas where vegetation grows rapidly (chaparral, mixed chaparral, etc). During yearly cycles with extensive rains, this brushing schedule may need to be increased. High use trails, and shared or multi-use trails need to be assessed regularly to maintain safe trail corridors.

Trail brushing may be variable depending on trail classification and use. Generally, all trails should be brushed 1 – 2 feet beyond the trail tread. Overhead brushing should be maintained at a minimum of 6'-8" to 8 feet in height for pedestrian and biking and at a minimum of 10 feet in height for equestrians. If overhead is maintained at less than 8 feet (for example, to maintain canopy cover common in scrub vegetation), the trail must be signed to indicate reduced overhead clearance.

In habitat zones with vegetation that typically does not grow to great heights (Coastal Sage Scrub, some Chaparral), brushing to less than 1 foot may be acceptable if brushing above 4 feet can be done to provide good sight lines. This reduced width trimming may be done to retain character of the trail while maintaining existing vegetation for soil retention (roots), and rainfall moderator (to reduce heavy rainfall directly on trail tread). An understanding of local conditions, including soils and vegetation, will determine brushing requirements in these areas.

Brush removal is usually fairly simple – "find the source". This means to cut brush at the point where the overgrown vegetation begins. Some vegetation types may be cut using shears if cutting back to the source will significantly reduce vegetation. Hand tools such as hand-loppers, pruning shears, hand saws are normally sufficient for annual brushing; however chainsaws or other power equipment may be needed in some instances. City policy for chainsaw use guidelines will be followed at all times. Additionally, all City staff operating power equipment must be current in required certification (chainsaw).

4.14 TRAIL CLOSURES

Trail closures will normally be of two types:

1) Temporary closure
    a) Repair, rehabilitation, or realignment
    b) Biological (nesting / breeding season)
    c) Seasonal (rainfall creating conditions where use would damage resources)

2) Permanent closure
    a) Redundant trails
    b) Unauthorized trails, including trail shortcuts (Note: Unauthorized trails that have not been "officially" approved/opened may be closed as needed without an official action.
    c) Trails not accessible to the public
    d) Trails not safe or sustainable
    e) Trails facilitating illegal activity
    f) Trails contributing to resource impacts: erosion, biological, other
    g) New environmental concerns

Temporary closures will be done to complete trail repairs, construct special trail facilities as needed (steps, stairs, fencing, retaining walls, overlooks, etc.), or complete trail realignments. Additionally, trail closures may be initialized in some areas to accommodate biological concerns (breeding/nesting), or seasonal conditions (rain, mud). While it is ideal to close the trail completely during trail repair and construction periods, it may not be reasonable or feasible due to daily high-use patterns. Where it is difficult to affect a full trail closure, appropriate signage and other controls must be implemented to reduce hazards to trail users and trail crews. While this is usually not an effective option, and reduces productivity of trail crews, it is often necessary. All temporary trail closures should be scheduled to those times when user volume is low, during breeding/nesting season (if applicable), and when seasonal conditions are not favorable (rains, muddy conditions).

Permanent closures will be implemented on those trails identified as having one or more of the above listed closure conditions. Trails identified will be closed, stabilized, and passively or actively revegetated. Closures traditionally require signage (minimum), and barriers (cut brush, fencing, etc.). If trails identified for closure are recognized in Park Master Plans, Community Plans, or other guiding documents, alternate routes will be identified and constructed to provide for intended access. Permanent closure of specific trails or specific areas shown on City Council approved documents (Park Master Plans, Community Plans, etc.) will be supported with substantive documentation, and can be approved as a Mayoral action.

The primary goal of Open Space management in the City of San Diego is to protect and preserve sensitive natural and cultural resources. New trails, changes in trail use designations (single-use to multi-use), realignments to accommodate use changes, and other trail modifications that impact these resources will require compliance with all regulatory requirements.

4.15 STREET / ROADWAY CROSSINGS

Street and roadway crossings are common in the urban environment, particularly in the more developed portions of the city. While most crossings can utilize signaled or signed crossings where motor vehicles must stop, some crossings may occur in a mid-block. While the majority of these mid-block crossings primarily accommodate hikers, many may also include bicycles, and/or equestrians.

Mid-block crossing "at grade" should be avoided. Other crossing alternatives, such as bridges or tunnels are preferable if possible. If an "at grade", mid-block crossing is considered, design must be implemented in compliance with the City of San Diego Street Design Manual, City of San Diego Council Policy 200-07, Caltrans Highway Design Manual, and State Traffic Manual.

Visual corridors, traffic speed and volume, and crossing users will factor in the determination of required safety controls. While many crossings are in urbanized, developed areas of the City, and have low traffic speeds and volumes, crossing controls may be minimal (signage). In areas that have high traffic speeds and/or volumes, and multiple users (including equestrians), crossing controls may include signs, flashing lights, and user activated signals. Appropriate City Departments will determine crossing requirements.

4.16 SIGNAGE

- Regulatory: Signs informing trail users of rules, regulation, and restrictions and prohibited activities. Regulatory signs also provide for the safety of the user or to add to their enjoyment.

- Interpretive: Signs providing interpretive, educational, or other trail information to the public.

- Directional & Location: Signs that indicate location of user, direction of trails, linkages and connections, and mileage (when appropriate).

Signage should be standardized as much as possible, with design and color consistent with the Open Space environment. Signs should also be consistent with other agency signage (when possible) to provide for continuity and clarity of information. Current City sign inventory may need to be expanded to address changing conditions (usage, specific trail conditions limiting use, etc.).

Signage should be standardized as much as possible, with design and color consistent with the open space environment. Signs should also be consistent with other agency signage (when possible) to provide for continuity and clarity of information. Current City sign inventory may need to be expanded to address changing conditions (usage, specific trail conditions limiting use, etc.).

THE CITY OF SAN DIEGO

M E M O R A N D U M

DATE: December 14, 2005

TO: Park Planning and Development Project Managers and
Maintenance Assessment District Grounds Maintenance Managers

FROM: Ann Hix, Deputy Director, Park and Recreation Department Open Space Division
April Penera, Deputy Director, Park and Recreation Department, Park Planning and Development Division

SUBJECT: Policy on Avoiding Use of Non-Native Invasive Plants in Park and Recreation Department Projects

---

PARK AND RECREATION DEPARTMENT POLICY

All future Park and Recreation Department projects, whether upgrades to existing facilities or new construction, should avoid the use of any of the Most Invasive non-native plant species listed in the attached *Invasive Ornamental Plant Guide* in any landscape, and should avoid the use of any of the Moderately Invasive non-native species in landscapes located on parcels adjacent to open space and/or Multi-Habitat Planning Area (MHPA) lands.

Most Invasive Plants: It is important to avoid the use of the Most Invasive species in **any** landscape because it has been documented that they may become established in open space lands from distant plantings. This is because plant seeds or spores can spread long distances through wind, water, or other carriers to reach open space.

Moderately Invasive Plants: Moderately invasive species should be avoided in landscapes located on parcels adjacent to publicly owned open space lands or open space easements, or the Multi-Habitat Planning Area (MHPA). The *Invasive Ornamental Plant Guide* identifies habitats in which a plant species from this list may be invasive.

Exceptions: While every effort should be made to substitute alternative, non-invasive plant species for those invasive species listed, in certain unique situations, such as, but not limited to, historic and/or significant landscapes which are not located adjacent to open space or MHPA lands, it may be appropriate to selectively use plant species identified in the Most Invasive and Moderately Invasive plant lists. In those specific instances, a justification letter approved by the Deputy Director of the appropriate Park and Recreation Department Division must be written and placed in the project file.

EXPLANATION

We are experiencing an invasion of non-native plants in over 70% of our 24,000+ acres of open space, which crowd out native plants and reduce the quality of the habitats. Removing these non-natives once established is an expensive, time-consuming, and often not very successful process. Additionally, it is important that the Park and Recreation Department lead by example, comply with the City's Multiple Species Conservation Program (MSCP), and be a good steward to the open space lands we manage and the MHPA preserve our parks are often adjacent to.

The City's MSCP Subarea Plan, Section 1.4.3 Land Use Adjacency Guidelines, states that adjacency issues must "be addressed, on a project by project basis, during either the planning (new development) or management (new and existing development) stages to minimize impacts and maintain the function of the MHPA…No invasive non-native plant species shall be introduced into areas adjacent to the MHPA."

Recently, the San Diego Chapters of the California Native Plant Society and the American Society of Landscape Architects worked together to develop the attached *Invasive Ornamental Plant Guide.* The Guide is a good resource for explaining characteristics of invasive plants and how they impact native plants, and provides a matrix list of Most Invasive and Moderately Invasive plant species that should be used either not at all, or only in certain locations. We have included the matrix list as an attachment; however, we encourage staff to explore the web site to learn more about invasive plant species and about the *Invasive Ornamental Plant Guide* at http://asla-sandiego.org/reference.html. We have also ordered copies of the California Invasive Plant Council *Don't Plant a Pest* brochures for distribution to interested staff and the public. This brochure is a good visual and informative guide to what native or non-invasive plants can be used to replace species on the *Invasive Ornamental Plant Guide* matrix list. The brochure can also be accessed on the internet at the following web site: http://www.cal-ipc.org/landscaping/dpp/socal.php.

If you have general policy questions, feel free to contact Ann at 619-533-6721. For more specific or technical questions, contact the following Open Space staff: Josh Garcia, Natural Resources Manager, at 619-533-6713; or Paul Kilburg, Open Space Lands Coordinator, at 619-533-6739.

Ann Hix Deputy Director Open Space Division	April Penera Deputy Director Park Planning & Development Division

NOTE: PLEASE FOLLOW THE LINKS PROVIDED ABOVE FOR MOST CURRENT VERSIONS OF THE REFERENCED ATTACHMENTS.

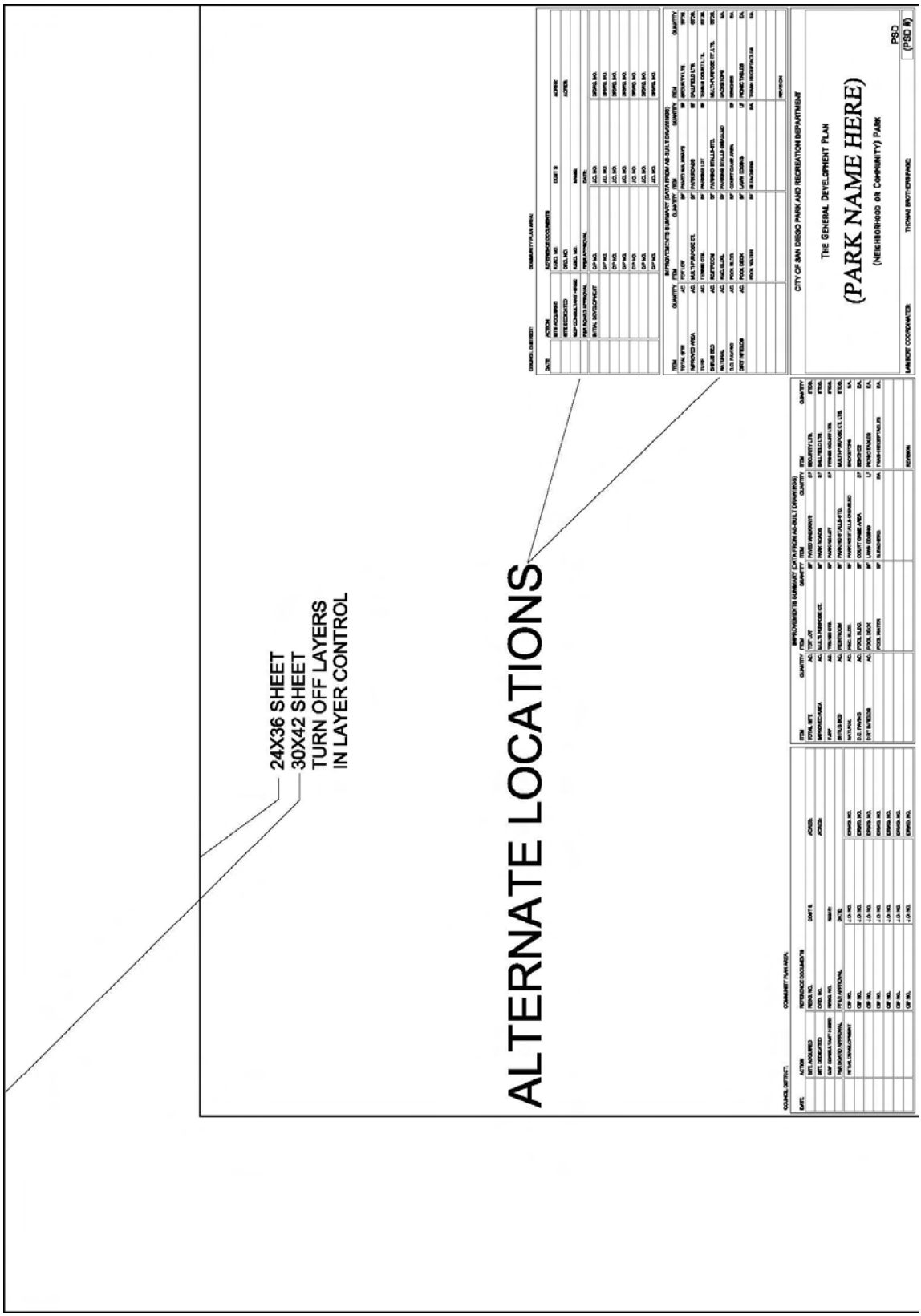

General Development Plan Border

General Development Plan Example

THE CITY OF SAN DIEGO • STATE OF CALIFORNIA •
SEMPER VIGILANS