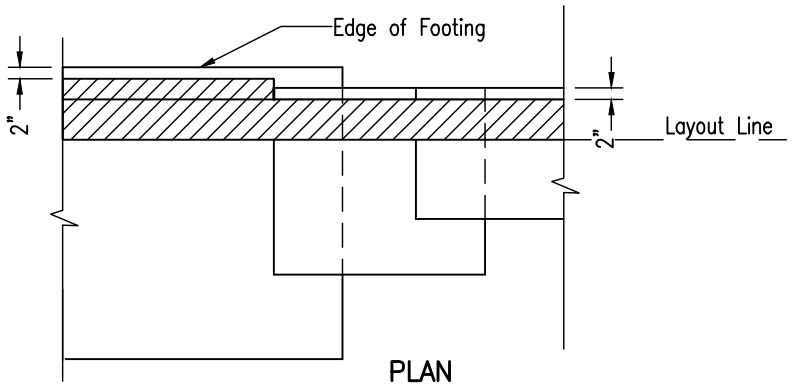


PLAN

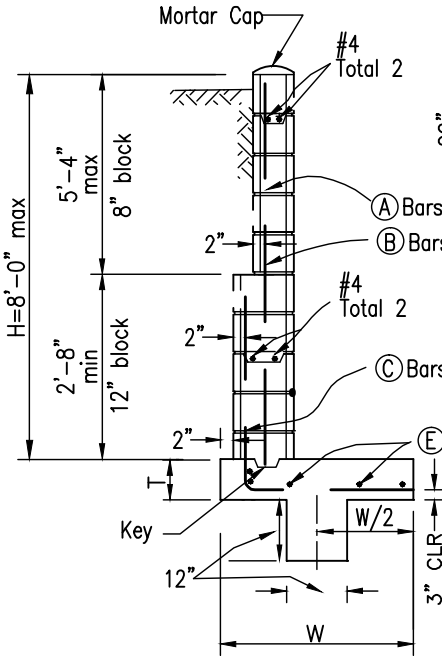


TYPICAL SECTION
over 5'-4"

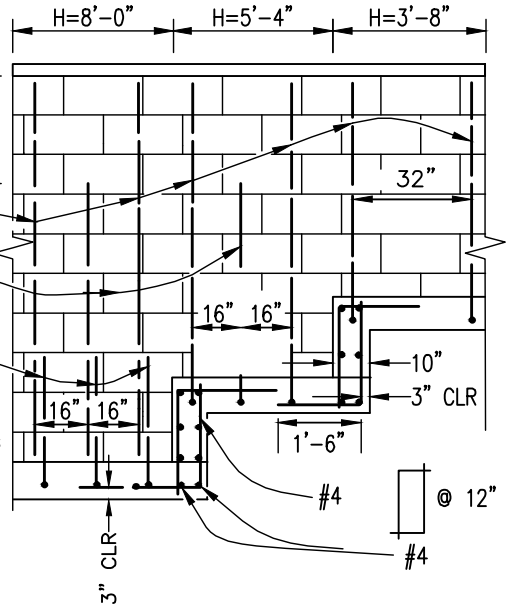


ELEVATION
Horizontal reinf. not shown

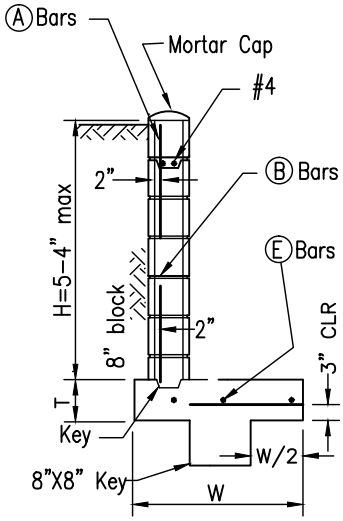


TYPICAL SECTION
5'-4" max

| DIMENSIONS AND REINFORCING STEEL | | | |
|---|---|---|---|
| H (max) | 3'-8" | 5'-4" | 8'-0" |
| T (min) | 0'-8" | 0'-10" | 1'-0" |
| W (min) | 2'-4" | 3'-6" | 5'-4" |
| Ⓐ Bars | #4@32" | #4@32" | #4@32" |
| Ⓑ Bars | ——— | #4@32" | #4@32" |
| Ⓒ Bars | ——— | ——— | #6@16" |
| Ⓔ Bars | #4 Total 4 | #4 Total 5 | #4 Total 6 |
| max soil pressure | 500psf | 600psf | 800psf |

NOTES: 1. See C-7 and C-8 for additional notes and details.
2. Fill all block cells with grout.

| Revision | By | Approved | Date |
|---|---|---|---|
| ORIGINAL | | Kercheval | 12/75 |
| Add Metric | | T. Stanton | 03/03 |
| Delete Metric | S.S. | T. Shell | 03/11 |
| | | | |
| | | | |

SAN DIEGO REGIONAL STANDARD DRAWING

# MASONRY RETAINING WALL TYPE 1 (LEVEL BACKFILL)

RECOMMENDED BY THE SAN DIEGO REGIONAL STANDARDS COMMITTEE

7/26/2012

Chairperson R.C.E. 19246 Date

DRAWING NUMBER C-1