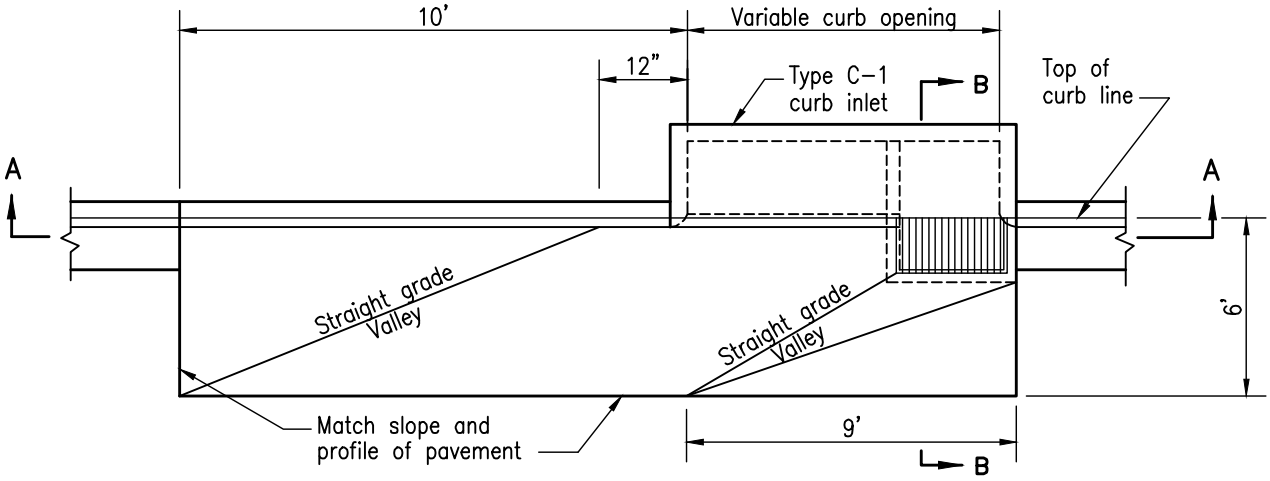


PLAN

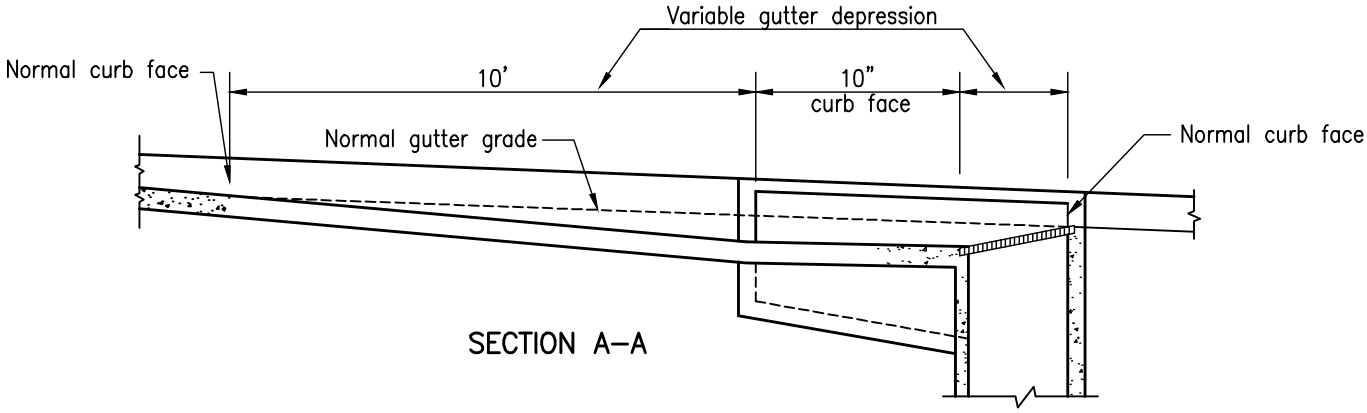


SECTION A–A

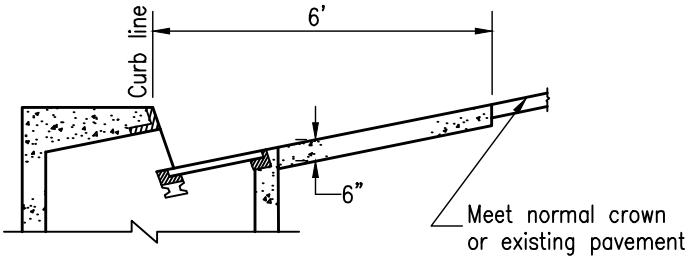


SECTION B–B

## NOTES

1. Curb and apron to be placed monolithically.
2. Use of false header at valleys and slope break line is optional.
3. Extend vertical steel from inlet structure into concrete apron as shown on Section B–B of D–03A.
4. Concrete shall be 520–C–2500.

LEGEND ON PLANS

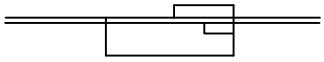

| Revision | By | Approved | Date |
|---|---|---|---|
| ORIGINAL | | Kercheval | 12/75 |
| Add Metric | | T. Stanton | 03/03 |
| Reformatted | | T. Stanton | 04/06 |
| Replaced D–20 | | T. Stanton | 02/09 |
| Edited | S.S. | T. Regello | 03/11 |

**SAN DIEGO REGIONAL STANDARD DRAWING**

**CONCRETE APRON FOR TYPE C CURB INLET**

RECOMMENDED BY THE SAN DIEGO REGIONAL STANDARDS COMMITTEE

7/26/2012

Chairperson R.C.E. 19246 Date

DRAWING NUMBER **D-03B**

FOR DRAWING D-3A SEE DRAWING SDD-117

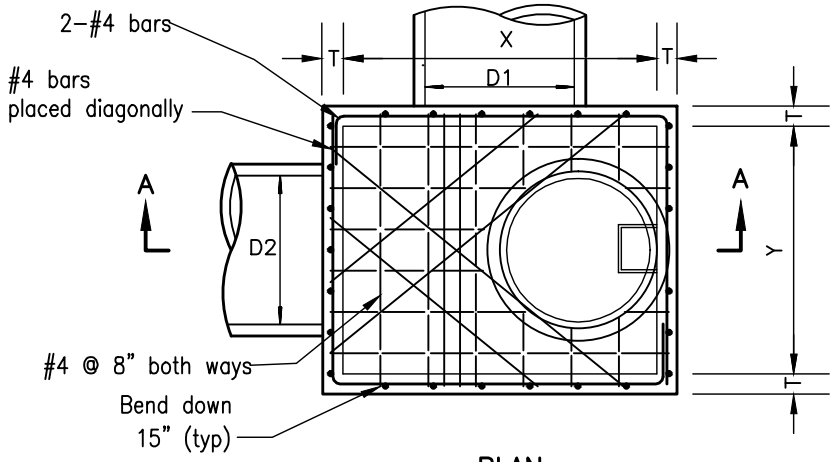


PLAN

| TYPE | PIPE DIAMETER (D1) | X | Y (See Note 8) | Z |
|---|---|---|---|---|
| A4 | up to 39" | 4' | 4' | 6' |
| A5 | 42" to 48" | 5' | 4' | 6' |
| A6 | 51" to 60" | 6' | 4' | 6' |
| A7 | 63" to 66" | 7' | 4' | 7' |
| A8 | 69" to 78" | 8' | 4' | 8' |

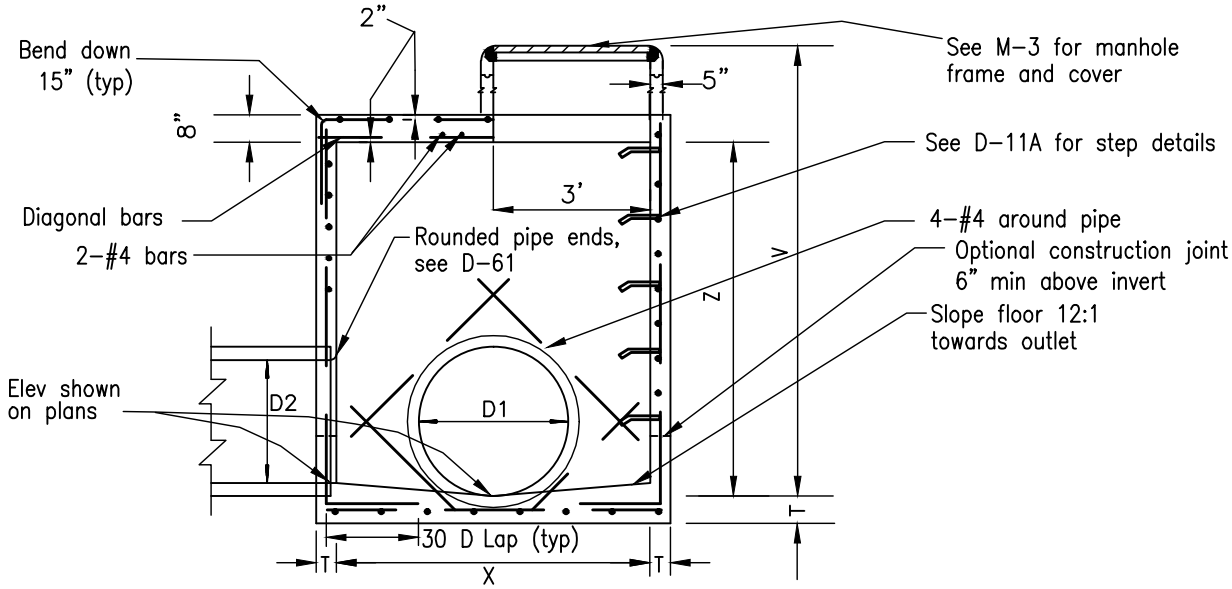


SECTION A-A

## NOTES

1. See D-11A & D-11B for additional notes and details.
2. Concrete base shall be 560-C-3250.
3. All precast components shall be reinforced with 1/4" diameter steel, wound spirally on 4" centers.
4. All joints shall be set in Class C mortar.
5. Maintain 1-1/2" clear spacing between reinforcing and concrete surface unless otherwise noted.
6. Exposed edges of concrete shall be rounded with a radius of 1/2".
7. Manhole cover to be marked "Storm Drain".
8. Modifications to "Y" dimension required if pipe (D2) exceeds 39".
9. If constructed adjacent to sidewalk, top of manhole to match sidewalk slope.

LEGEND ON PLANS

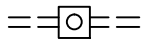

| Revision | By | Approved | Date |
|---|---|---|---|
| ORIGINAL | | Kercheval | 12/75 |
| Add Metric | | T. Stanton | 03/03 |
| Reformatted | | T. Stanton | 04/06 |
| Edited | | T. Stanton | 02/09 |
| Edited | S.S. | T. Regello | 03/11 |

SAN DIEGO REGIONAL STANDARD DRAWING

# STORM DRAIN CLEANOUT - TYPE A

RECOMMENDED BY THE SAN DIEGO REGIONAL STANDARDS COMMITTEE

7/26/2012

Chairperson R.C.E. 19246 Date

DRAWING NUMBER **D-09**

FOR DRAWINGS D-11A AND D-11B, SEE DRAWING SDD-114

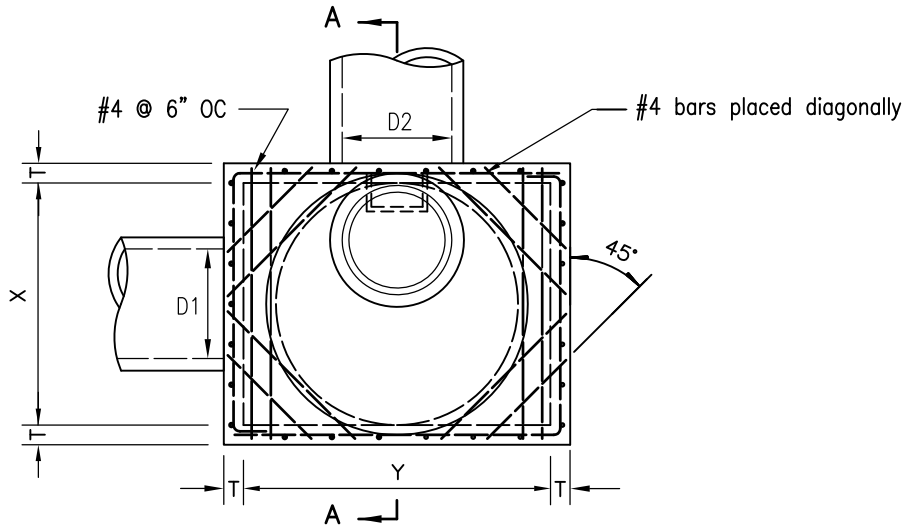


PLAN

| TYPE | PIPE DIAMETER (D1) | X | Y | Z |
|---|---|---|---|---|
| B5 | up to 51" | 5' | 4' | 5' |
| B6 | 54" to 60" | 6' | 4' | 6' |
| B7 | 63" to 69" | 7' | 4' | 7' |
| B8 | 72" to 81" | 8' | 4' | 8' |
| B9 | 84" to 90" | 9' | 4' | 9' |

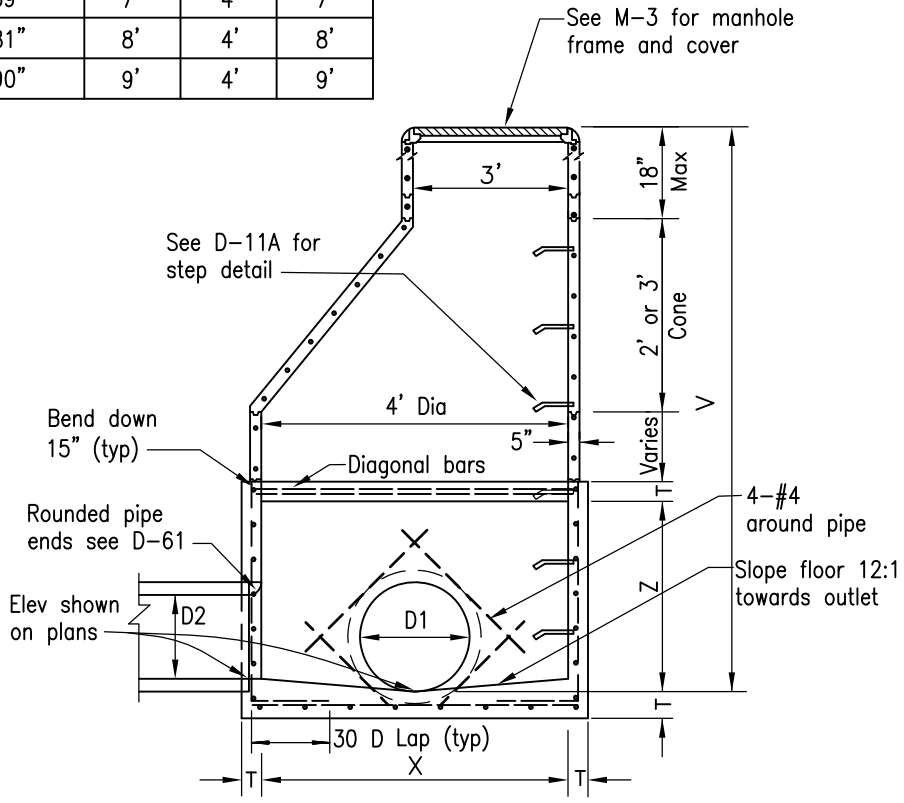


SECTION A-A

## NOTES

1. See D-11A & D-11B for additional notes and details.
2. All joints shall be set in Class C mortar.
3. All precast components shall be reinforced with 1/4" diameter steel wound spirally on 4" centers.
4. Maintain 1-1/2" clear spacing between reinforcing and concrete surface.
5. Concrete base shall be 560-C-3250.
6. Exposed edges of concrete shall be rounded with a 1/2" radius.
7. Manhole cover to be marked "Storm Drain".
8. Modifications to "Y" dimension required if pipe (D2) exceeds 39".
9. If constructed adjacent to sidewalk, top of manhole to match sidewalk slope.

LEGEND ON PLANS

| Revision | By | Approved | Date |
|---|---|---|---|
| ORIGINAL | | Kercheval | 12/75 |
| Add Metric | | T. Stanton | 03/03 |
| Reformatted | | T. Stanton | 04/06 |
| Edited | | T. Stanton | 02/09 |
| Edited | S.S. | T. Regello | 03/11 |

SAN DIEGO REGIONAL STANDARD DRAWING

# STORM DRAIN CLEANOUT - TYPE B

RECOMMENDED BY THE SAN DIEGO REGIONAL STANDARDS COMMITTEE

7/26/2012

Chairperson R.C.E. 19246 Date

DRAWING NUMBER **D-10**

FOR DRAWINGS D-11A AND D-11B, SEE DRAWING SDD-114

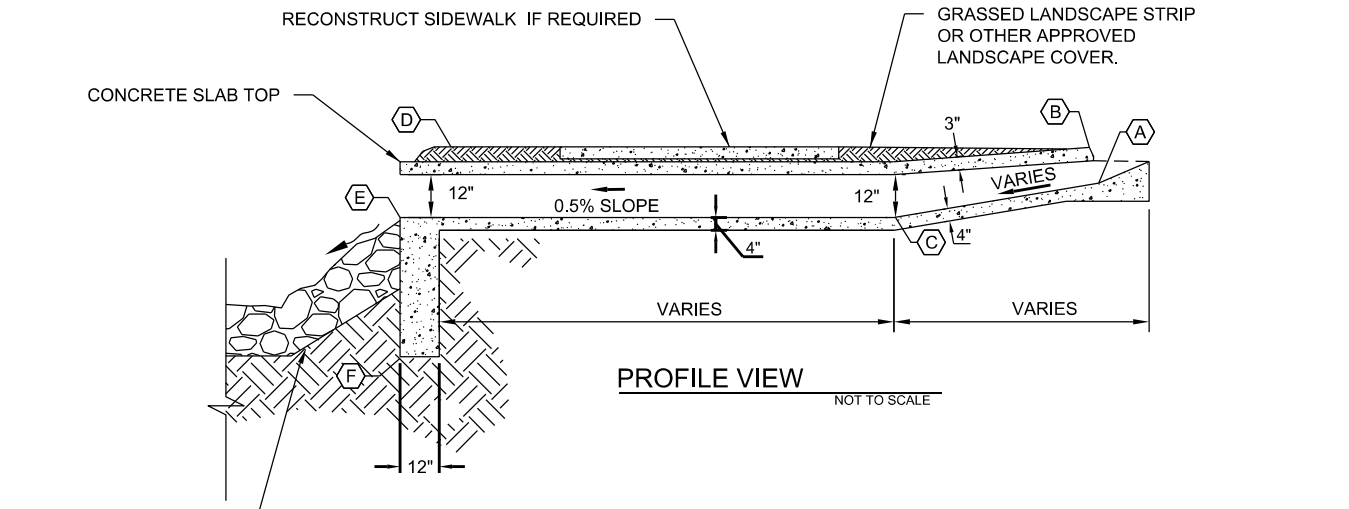


PROFILE VIEW

NOT TO SCALE

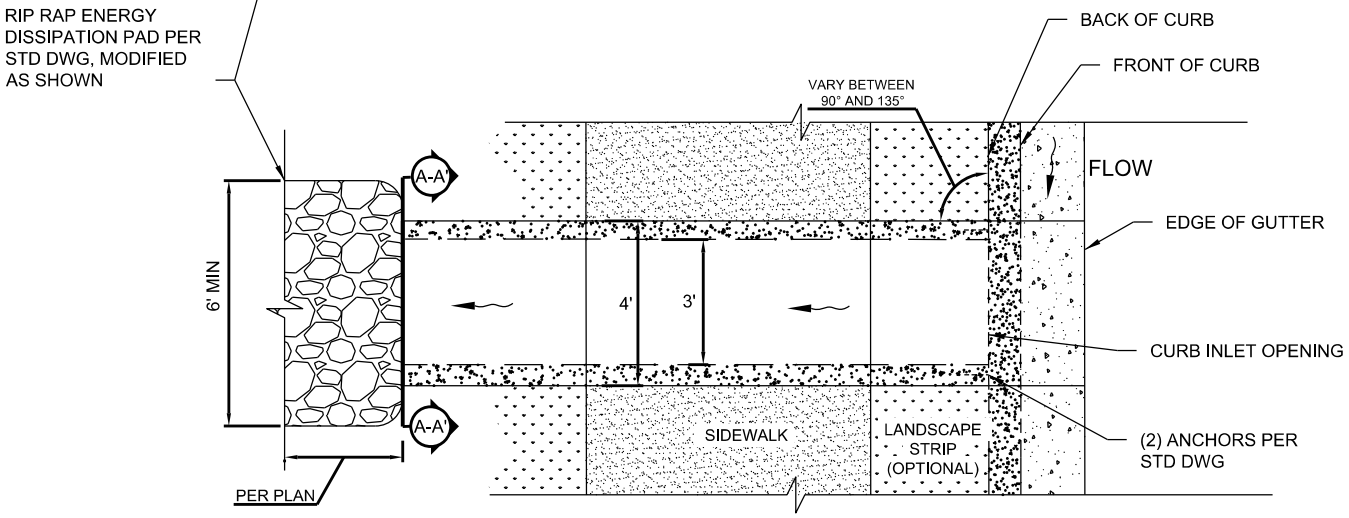


PLAN VIEW

NOT TO SCALE

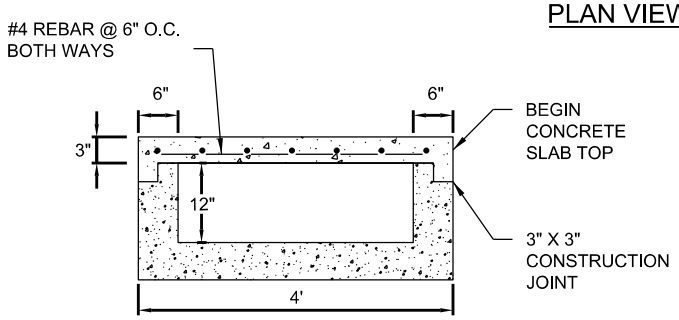


SECTION A-A' VAR NOT TO SCALE

CONSTRUCTION NOTES:

1. UTILIZE CONCRETE TYPE, REINFORCING STEEL, AND CONSTRUCTION NOTES PER STD DWG, EXCEPT AS MODIFIED.
2. COMPACT EXISTING SOILS WITH HAND HELD "JUMPING JACK" GASOLINE POWERED COMPACTOR PRIOR TO PLACING FORMS AND POURING CONCRETE.
3. SAW CUT EXISTING SIDEWALK, CURB, AND GUTTER AS NEEDED FOR CONSTRUCTION OF CURB-FACE INLET.
4. SLOPE OF INITIAL INLET DROP BASED ON ELEVATIONS A AND C, WHICH VARY BASED ON SITE CONSTRAINTS AND REQUIRED CURB OPENING HEIGHT.

STRUCTURE FEATURE TABLE

| LOCATION | COMMENTS |
|---|---|
| A | INV. OF CURB DROP AT GUTTER |
| B | TOP OF CURB |
| C | BEGIN 0.5% SLOPE |
| D | FINISHED GRADE OF SURFACE |
| E | END OF FLUME/0.5% SLOPE |
| F | BOTTOM OF FOOTING |

| REVISION | BY | APPROVED | DATE |
|---|---|---|---|
| ORIGINAL | JT | J. NAGELVOORT | 10/15 |

CITY OF SAN DIEGO - STANDARD DRAWING

RECOMMENDED BY THE CITY OF SAN DIEGO STANDARDS COMMITTEE

COORDINATOR R.C.E. 56523 DATE

# CURB-FACE INLET

DRAWING NUMBER **SDD-137**

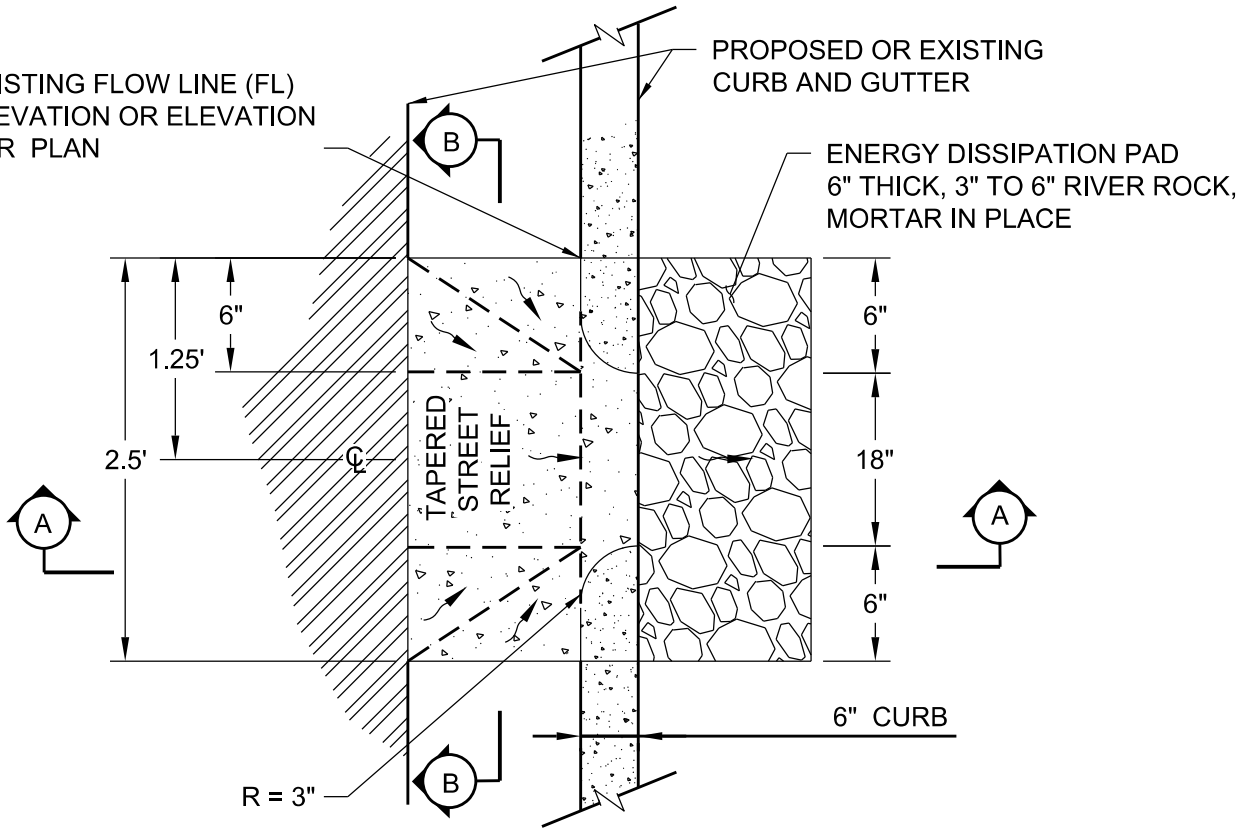


PLAN VIEW

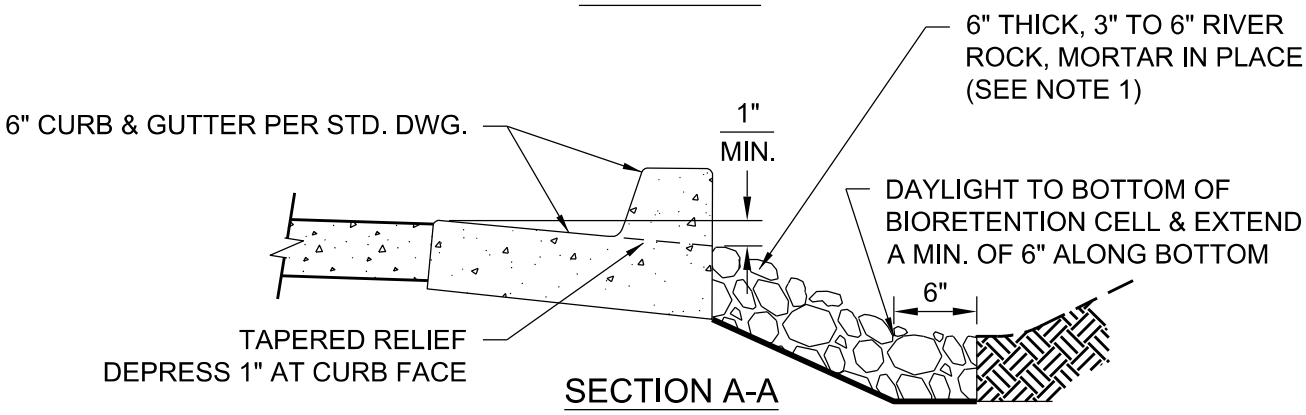


SECTION A-A

CONSTRUCTION NOTE:

1. RIVER ROCK DISSIPATION PAD PROVIDED AS STABILIZED ENTRANCE TO BIOFILTRATION SYSTEM. ROCK SHALL BE PLACED IN IRREGULAR PATTERN USING NON-UNIFORM SIZES TO PREVENT PREFERENTIAL FLOW PATHS, INCREASE ENERGY DISSIPATION, AND TO LIMIT THE SURFACE AREA OF EXPOSED MORTAR.

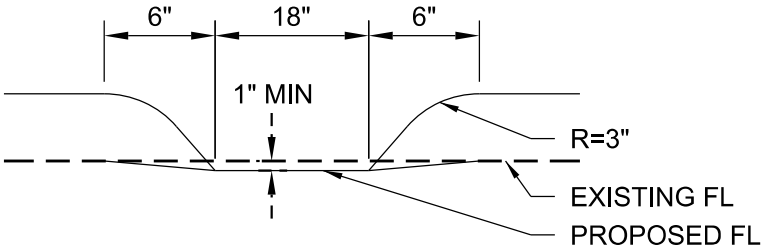


SECTION B-B

| REVISION | BY | APPROVED | DATE |
|---|---|---|---|
| ORIGINAL | JT | J. NAGELVOORT | 10/15 |

CITY OF SAN DIEGO - STANDARD DRAWING

**CURB CUT INLET WITH RIVER ROCK DISSIPATION**

RECOMMENDED BY THE CITY OF SAN DIEGO STANDARDS COMMITTEE

COORDINATOR R.C.E. 56523 DATE

DRAWING NUMBER **SDD-136**

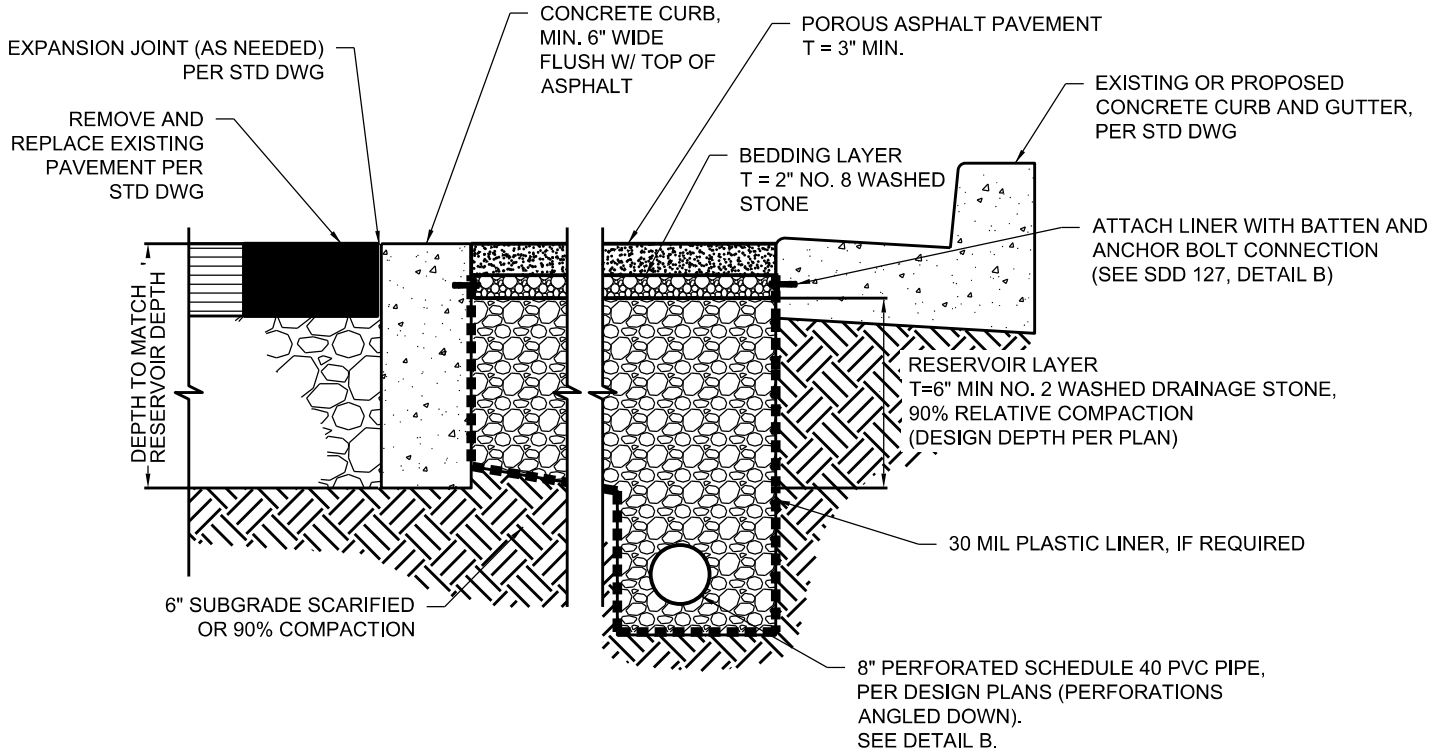


POROUS ASPHALT PAVEMENT (A / VAR) NOT TO SCALE

NOTES:

1. PERMEABLE ASPHALT CROSS-SLOPE SHALL BE 1.5%; MAXIMUM RUNNING SLOPE SHALL NOT EXCEED 5.0%.
2. ATTACH 30 MIL PLASTIC LINER PER SDSD SDD-127.
3. ALL AGGREGATE SIZED ACCORDING TO ASTM D448.
4. MATCH CONTROL JOINTS TO EXISTING CURB/GUTTER LOCATIONS, OR MAXIMUM 12' INTERVAL.
5. ELEVATION GRADIENT BETWEEN THE CONCRETE GUTTER AND ADJACENT PICP SHALL NOT EXCEED 1/4"; OTHERWISE, PROVIDE 1:2 BEVEL ON EDGE OF GUTTER
6. LOCATE UNDERDRAIN AS SHOWN ON THE IMPROVEMENT PLANS. HORIZONTAL LOCATION MAY VARY WITHIN PAVEMENT SECTION AS LONG AS MINIMUM OFFSET DISTANCES AND BOTTOM SLOPES ARE MAINTAINED.
7. DEPTH OF PERFORATED PVC PIPE MAY BE ADJUSTED TO TIE INTO THE ADJACENT CONNECTION POINT TO THE BMP DRAINAGE INFRASTRUCTURE AS NEEDED.
8. PIPE PENETRATIONS THROUGH PLASTIC LINER SHALL BE SEALED ACCORDING TO ASTM D6497.

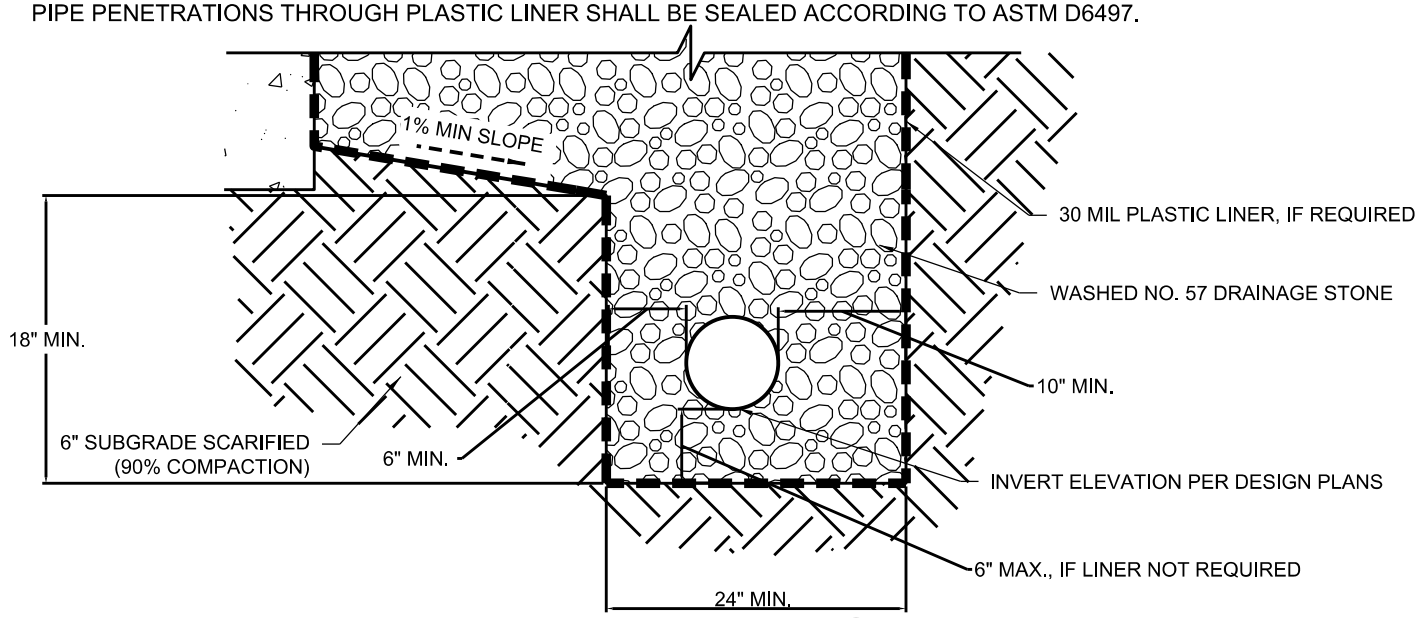


UNDERDRAIN DETAIL (B / VAR) NOT TO SCALE

| REVISION | BY | APPROVED | DATE |
|---|---|---|---|
| ORIGINAL | JT | J. NAGELVOORT | 10/15 |

CITY OF SAN DIEGO - STANDARD DRAWING

**POROUS ASPHALT PAVEMENT DETAIL**

RECOMMENDED BY THE CITY OF SAN DIEGO STANDARDS COMMITTEE

COORDINATOR R.C.E. 56523 DATE

DRAWING NUMBER **SDD-135**

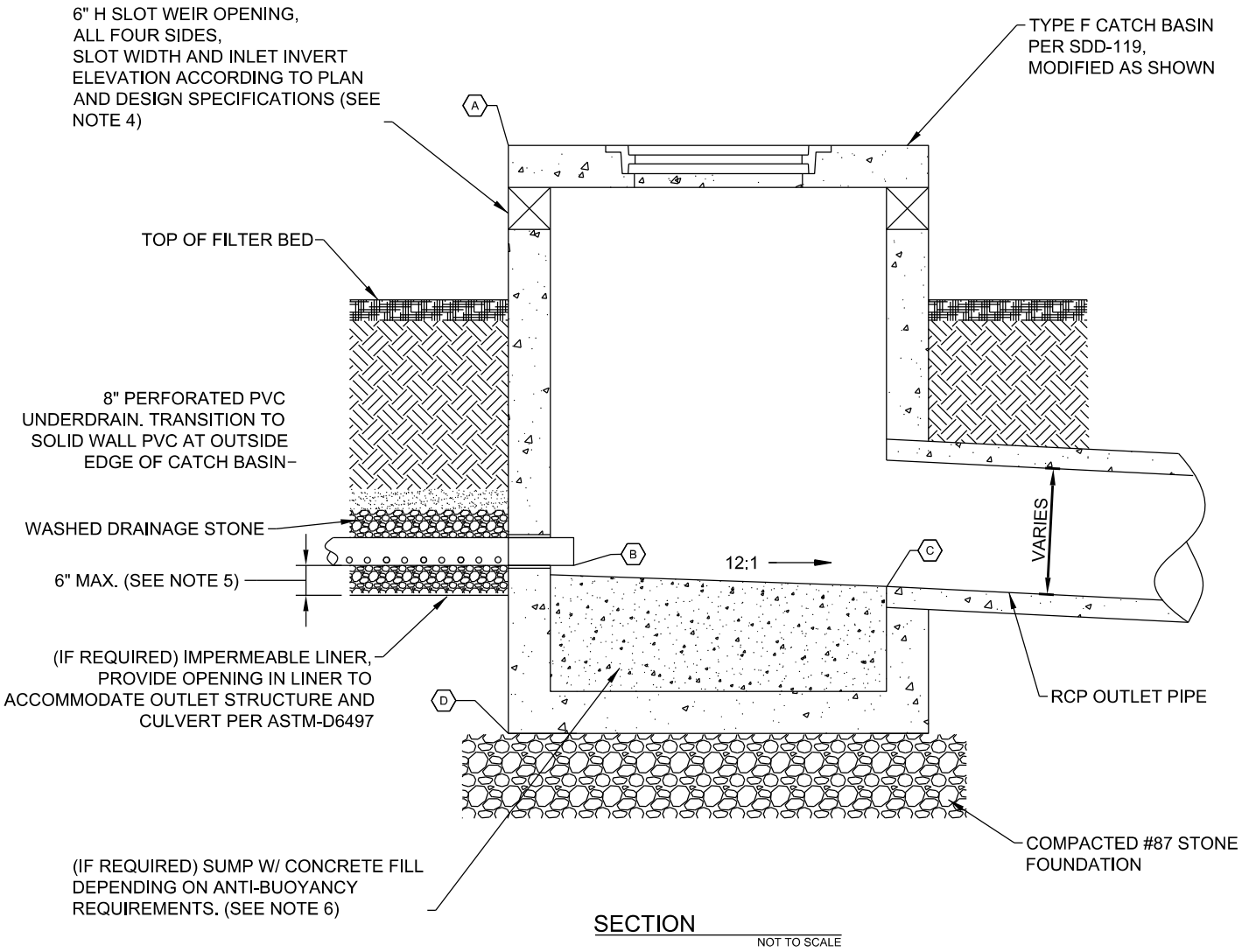


SECTION

NOT TO SCALE

STRUCTURE FEATURE TABLE

| LOCATION | COMMENTS |
|---|---|
| A | TOP OF STRUCTURE |
| B | INVERT OF UNDERDRAIN - IN |
| C | INVERT OF CULVERT - OUT |
| D | BOTTOM OF STRUCTURE |

CONSTRUCTION NOTES:

1. UTILIZE IMPERMEABLE LINER AND 8" UNDERDRAIN ONLY IF SPECIFIED IN PLANS.
2. IF REQUIRED, ATTACH LINER TO STRUCTURE USING BATTEN AND ANCHOR BOLT CONNECTION PER SDD-127, DETAIL B.
3. REFER TO DESIGN PLANS FOR LOCATION AND ELEVATIONS.
4. MINIMUM 6" HORIZONTAL OFFSET FROM EDGE OF STRUCTURE TO SLOT WEIR OPENING, BOTH SIDES, TO ENSURE STRUCTURAL SUPPORT OF SLAB TOP.
5. MAX. UNDERDRAIN OFFSET DIMENSION ONLY APPLIES IF IMPERMEABLE LINER IS NOT REQUIRED. OTHERWISE INSTALL UNDERDRAIN DIRECTLY ABOVE LINER.
6. THICKNESS OF SUMP VARIES BASED ON ANTI-BUOYANCY REQUIREMENTS.

| REVISION | BY | APPROVED | DATE |
|---|---|---|---|
| ORIGINAL | JT | J. NAGELVOORT | 10/15 |

CITY OF SAN DIEGO - STANDARD DRAWING

**BIORETENTION OVERFLOW STRUCTURE**

RECOMMENDED BY THE CITY OF SAN DIEGO STANDARDS COMMITTEE

COORDINATOR R.C.E. 56523 DATE

DRAWING NUMBER **SDD-131**

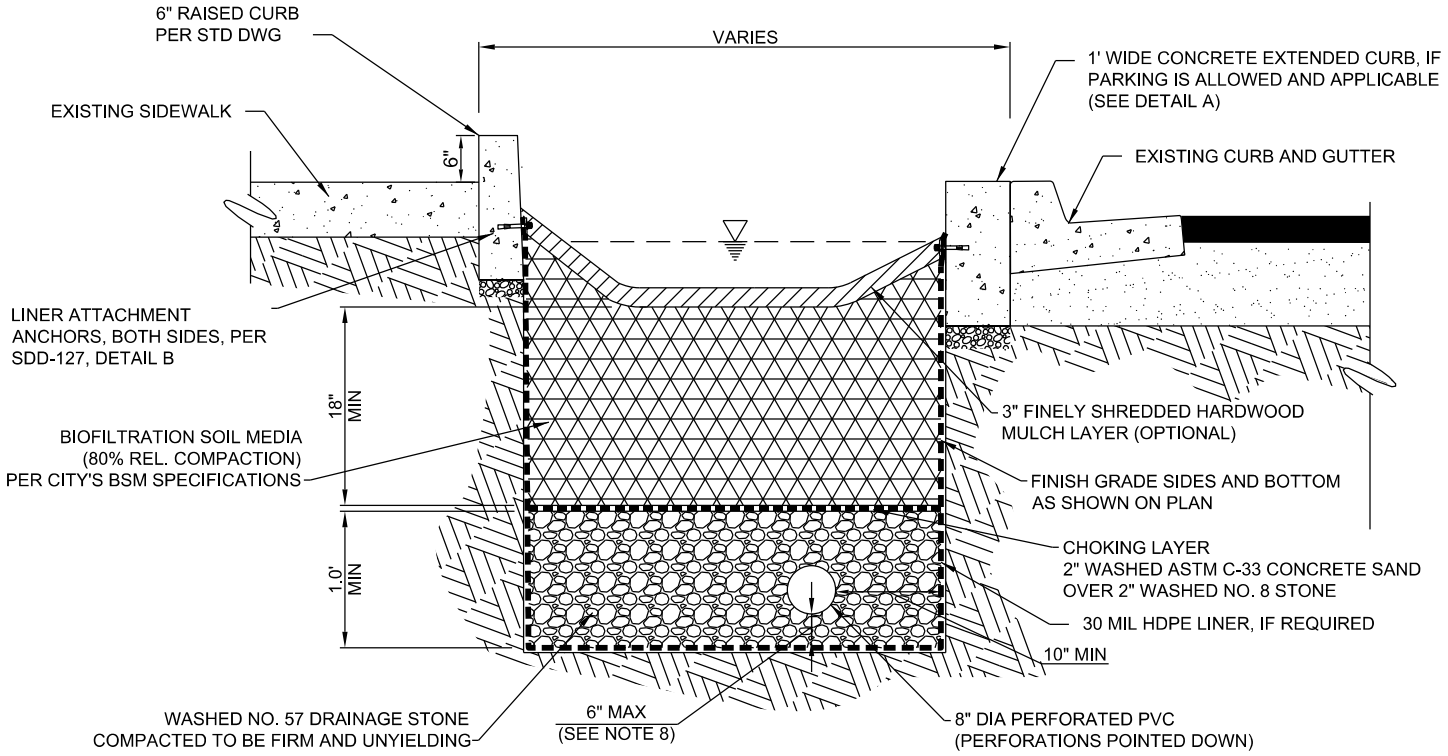


## TYPE A - BIOFILTRATION SECTION FOR PARKWAY PLANTERS

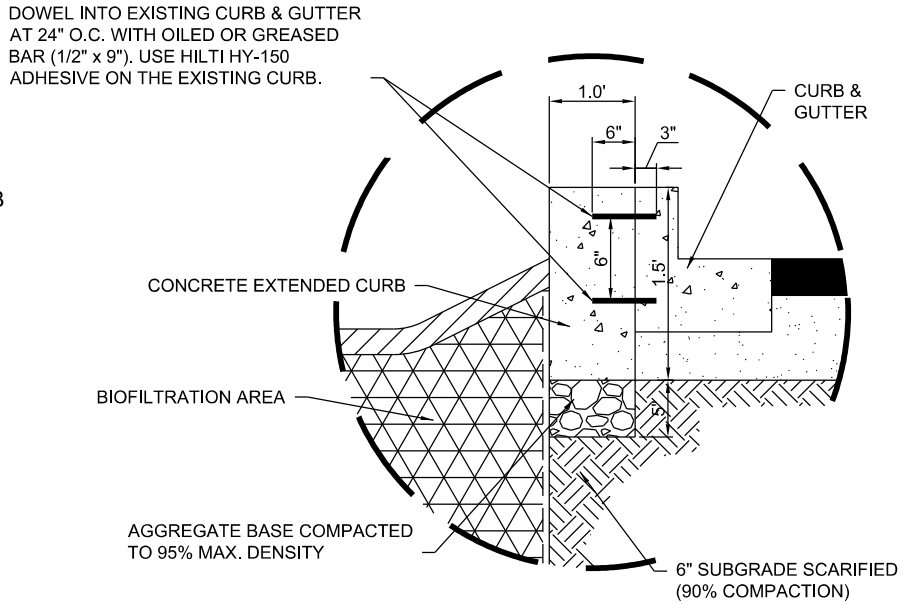


DETAIL A

NOTES:

1. WHERE APPLICABLE, POUR 1' WIDE CONCRETE EXTENDED CURB MONOLITHICALLY WITH THE PROPOSED CURB AND GUTTER. OTHERWISE, DOWEL INTO EXISTING CURB PER DETAIL A.
2. REFER TO DESIGN PLANS FOR HORIZONTAL AND VERTICAL CONTROL INFORMATION.
3. THE INCLUSION OF AN UNDERDRAIN SYSTEM WITH IMPERMEABLE LINER IS DEPENDENT UPON THE RECOMMENDATION OF GEOTECHNICAL INVESTIGATION.
4. IF REQUIRED, REFER TO DESIGN PLANS FOR UNDERDRAIN INVERT ELEVATIONS.
5. REFER TO SDD-125 FOR UNDERDRAIN CLEANOUT LOCATIONS AND INSTALLATION DETAILS.
6. INSTALL PIPE PENETRATIONS THROUGH IMPERMEABLE LINER ACCORDING TO ASTM D6497.
7. GEOTEXTILE MAY BE UTILIZED IN-LIEU OF AGGREGATE CHOKING LAYER IF APPROVED BY ENGINEER.
8. FOR BIOFILTRATION SYSTEMS THAT DO NOT REQUIRE AN IMPERMEABLE LINER, A MAXIMUM OFFSET OF 6 INCHES IS REQUIRED BETWEEN THE INVERT OF THE UNDERDRAIN AND BOTTOM OF STORAGE LAYER.
9. ALL AGGREGATE SIZED ACCORDING TO ASTM D448



| REVISION | BY | APPROVED | DATE |
|---|---|---|---|
| ORIGINAL | JT | J. NAGELVOORT | 10/15 |

CITY OF SAN DIEGO - STANDARD DRAWING

**BIOFILTRATION DETAILS**

RECOMMENDED BY THE CITY OF SAN DIEGO STANDARDS COMMITTEE

COORDINATOR R.C.E. 56523 DATE

DRAWING NUMBER **SDD-130**

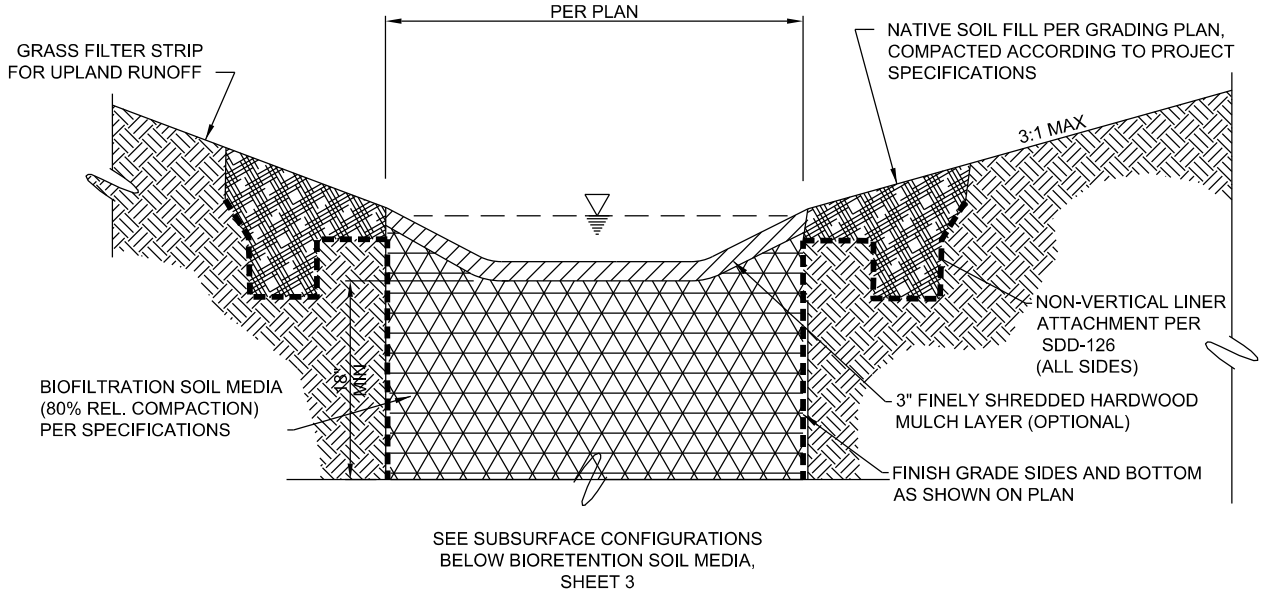


TYPE B - BIOFILTRATION SECTION - OPEN SPACE

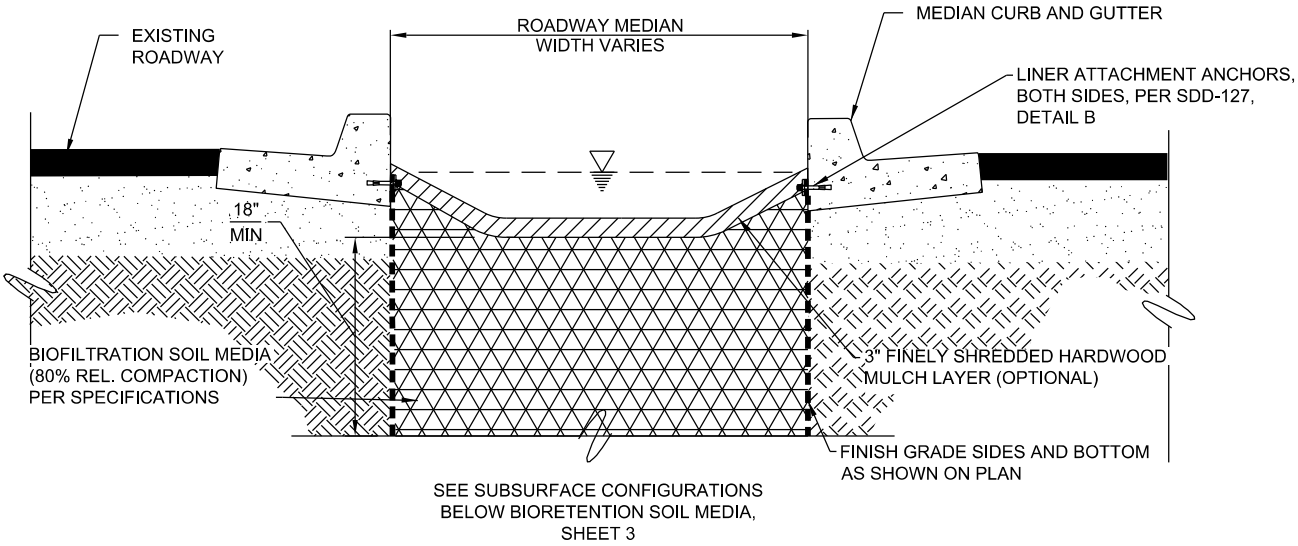


TYPE C - BIOFILTRATION SECTION - ROADWAY MEDIAN

NOTES:

1. WHERE APPLICABLE, POUR 1' WIDE CONCRETE EXTENDED CURB MONOLITHICALLY WITH THE PROPOSED CURB AND GUTTER. OTHERWISE, DOWEL INTO EXISTING CURB PER DETAIL A.
2. REFER TO DESIGN PLANS FOR HORIZONTAL AND VERTICAL CONTROL INFORMATION.



| REVISION | BY | APPROVED | DATE |
|---|---|---|---|
| ORIGINAL | JT | J. NAGELVOORT | 10/15 |

CITY OF SAN DIEGO - STANDARD DRAWING

**BIOFILTRATION DETAILS**

RECOMMENDED BY THE CITY OF SAN DIEGO STANDARDS COMMITTEE

COORDINATOR R.C.E. 56523 DATE

DRAWING NUMBER **SDD-130**

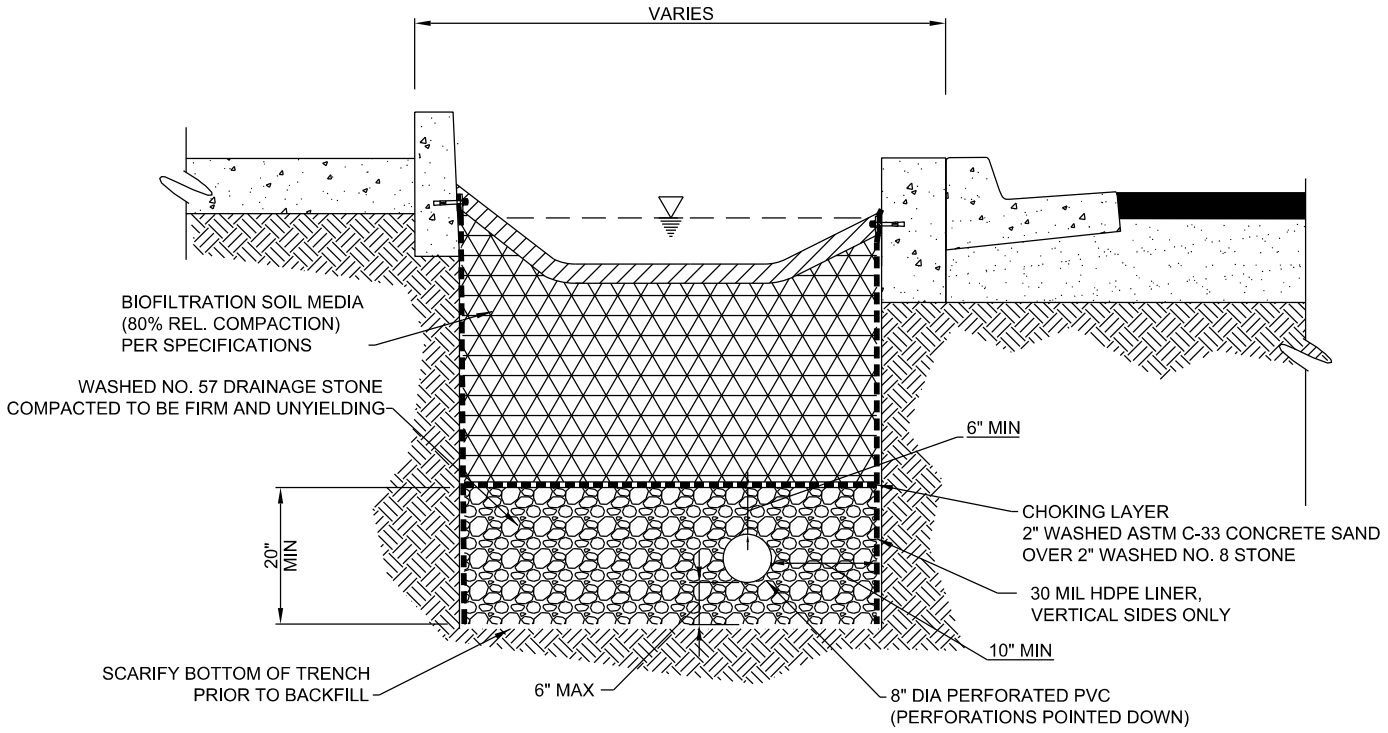


TYPICAL BIOFILTRATION SECTION W/ PARTIAL RETENTION

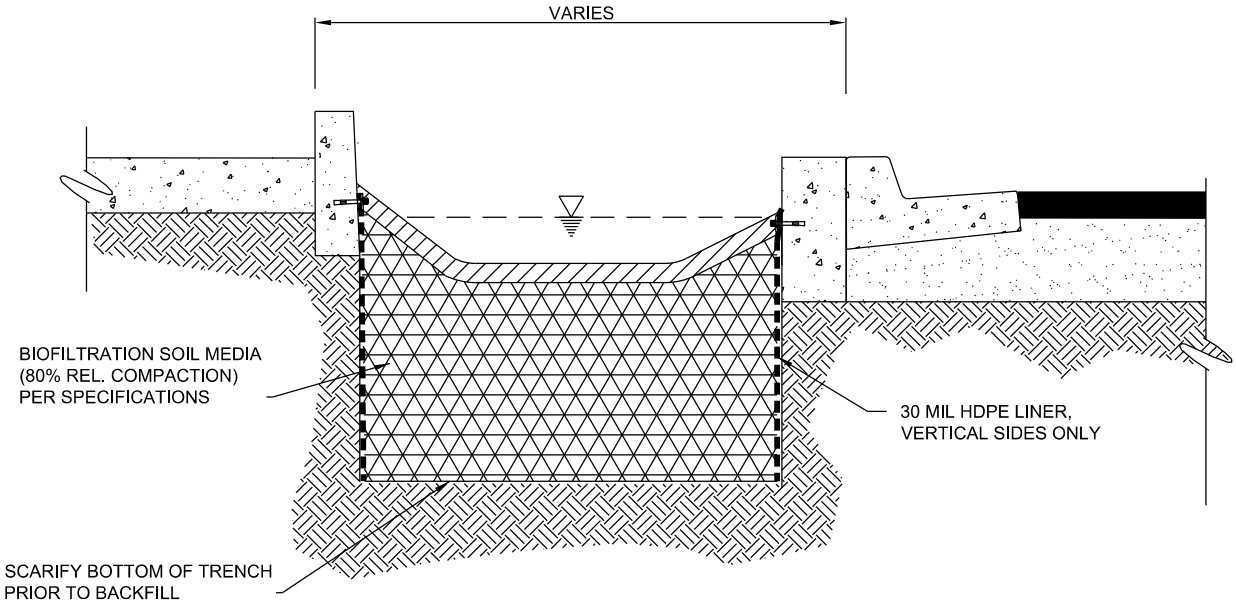


TYPICAL BIORETENTION SECTION

NOTES:

1. THE INCLUSION OF AN UNDERDRAIN SYSTEM WITH IMPERMEABLE LINER IS DEPENDENT UPON THE RECOMMENDATION OF GEOTECHNICAL INVESTIGATION.
2. IF REQUIRED, REFER TO DESIGN PLANS FOR UNDERDRAIN INVERT ELEVATIONS.
3. REFER TO SDD-125 FOR UNDERDRAIN CLEANOUT LOCATIONS AND INSTALLATION DETAILS.
4. INSTALL PIPE PENETRATIONS THROUGH IMPERMEABLE LINER ACCORDING TO ASTM D6497.
5. GEOTEXTILE MAY BE UTILIZED IN-LIEU OF AGGREGATE CHOKING LAYER IF APPROVED BY ENGINEER.
6. FOR BIOFILTRATION SYSTEMS THAT DO NOT REQUIRE AN IMPERMEABLE LINER, A MAXIMUM OFFSET OF 6 INCHES IS REQUIRED BETWEEN THE INVERT OF THE UNDERDRAIN AND BOTTOM OF STORAGE LAYER.
7. ALL AGGREGATE SIZED ACCORDING TO ASTM D448



| REVISION | BY | APPROVED | DATE |
|---|---|---|---|
| ORIGINAL | JT | J. NAGELVOORT | 10/15 |

CITY OF SAN DIEGO - STANDARD DRAWING

**ALTERNATIVE SUBSURFACE CONFIGURATIONS**

RECOMMENDED BY THE CITY OF SAN DIEGO STANDARDS COMMITTEE

COORDINATOR R.C.E. 56523 DATE

DRAWING NUMBER **SDD-130**

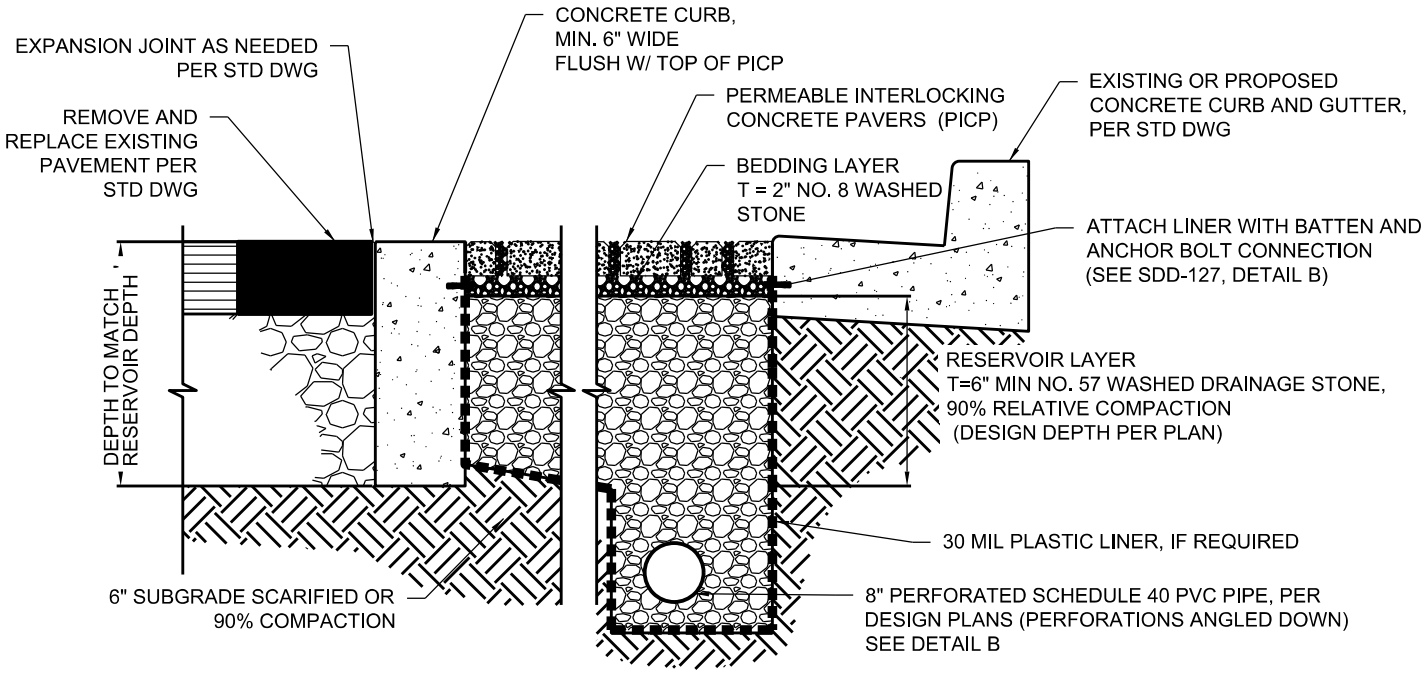


PERMEABLE INTERLOCKING CONCRETE PAVERS (A / VAR) NOT TO SCALE

NOTES:

1. ALL PICP SHALL CONFORM TO ASTM D636 AND ADA DESIGN GUIDELINES.
2. PICP CROSS-SLOPE SHALL BE 1.5%; MAXIMUM RUNNING SLOPE SHALL NOT EXCEED 5.0%.
3. ELEVATION GRADIENT BETWEEN THE CONCRETE GUTTER AND ADJACENT PICP SHALL NOT EXCEED 1/4"; OTHERWISE, PROVIDE 1:2 BEVEL ON EDGE OF GUTTER.
4. OPEN VOID FILL MEDIA AROUND PICP SHALL BE NO. 8 WASHED DRAINAGE STONE.
5. ATTACH 30 MIL PLASTIC LINER PER SDD-127.
6. ALL AGGREGATE SIZED ACCORDING TO ASTM D448.
7. LOCATE UNDERDRAIN AS SHOWN ON THE IMPROVEMENT PLANS. HORIZONTAL LOCATION MAY VARY WITHIN PAVEMENT SECTION AS LONG AS MINIMUM OFFSET DISTANCES AND BOTTOM SLOPES ARE MAINTAINED.
8. DEPTH OF PERFORATED PVC PIPE MAY BE ADJUSTED TO TIE INTO THE ADJACENT CONNECTION POINT TO BMP DRAINAGE INFRASTRUCTURE AS NEEDED.
9. PIPE PENETRATIONS THROUGH PLASTIC LINER SHALL BE SEALED ACCORDING TO ASTM D6497.

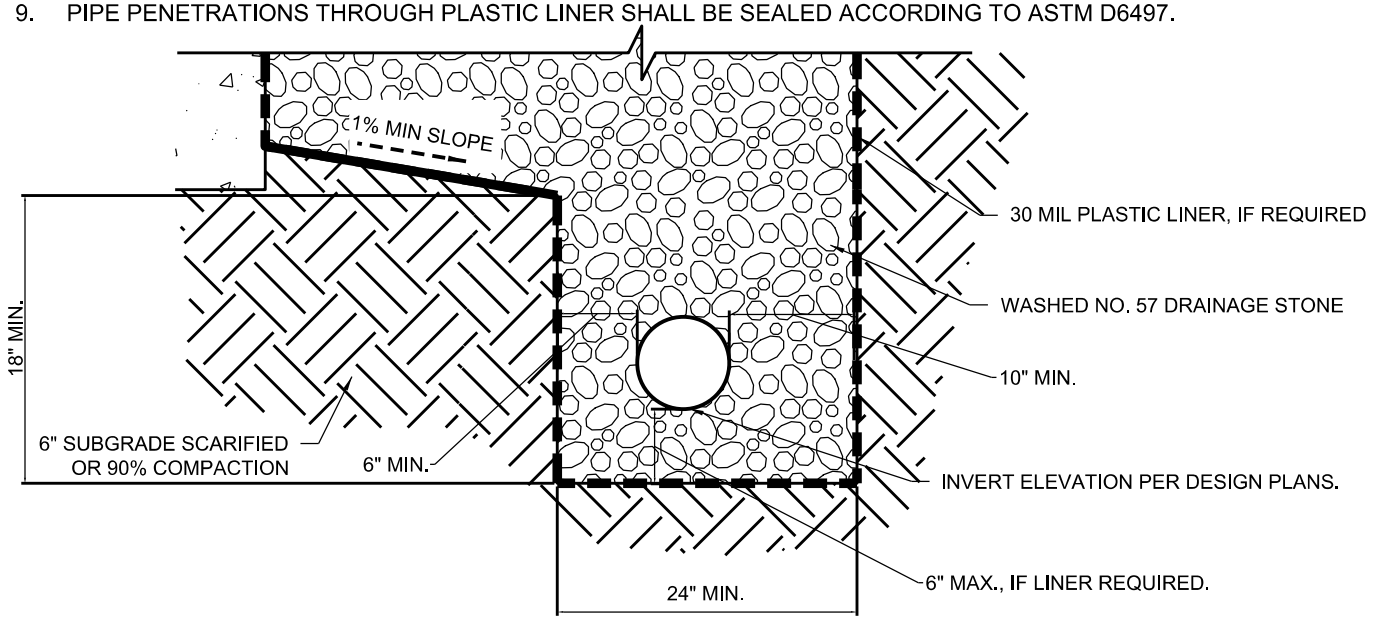


UNDERDRAIN DETAIL (B / VAR) NOT TO SCALE

| REVISION | BY | APPROVED | DATE |
|---|---|---|---|
| ORIGINAL | JT | J. NAGELVOORT | 10/15 |

CITY OF SAN DIEGO - STANDARD DRAWING

**PERMEABLE INTERLOCKING CONCRETE PAVER DETAIL**

RECOMMENDED BY THE CITY OF SAN DIEGO STANDARDS COMMITTEE

COORDINATOR R.C.E. 56523 DATE

DRAWING NUMBER **SDD-129**

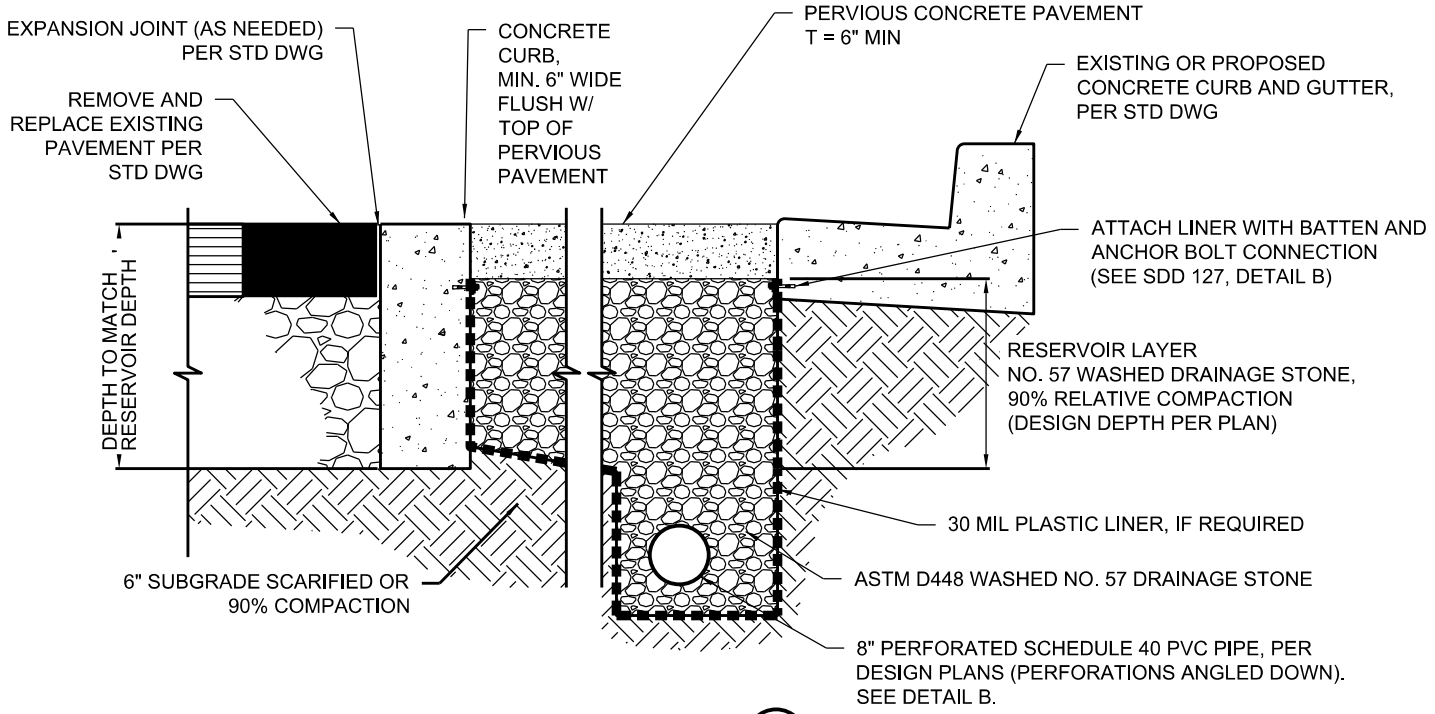


NEW PERVIOUS CONCRETE (A / VAR) NOT TO SCALE

NOTE:

1. PERVIOUS CONCRETE CROSS-SLOPE SHALL BE 1.5%; MAXIMUM RUNNING SLOPE SHALL NOT EXCEED 5.0%.
2. ELEVATION GRADIENT BETWEEN THE CONCRETE GUTTER AND ADJACENT PERVIOUS CONCRETE PAVEMENT SHALL NOT EXCEED 1/4"; OTHERWISE, PROVIDE 1:2 BEVEL ON EDGE OF GUTTER.
3. ATTACH 30 MIL PLASTIC LINER PER SDD-127.
4. MATCH CONTROL JOINTS TO EXISTING CURB/GUTTER LOCATIONS, OR MAXIMUM 12' INTERVAL.
5. LOCATE UNDERDRAIN AS SHOWN ON THE IMPROVEMENT PLANS. HORIZONTAL LOCATION MAY VARY WITHIN PAVEMENT SECTION AS LONG AS MINIMUM OFFSET DISTANCES AND BOTTOM SLOPES ARE MAINTAINED.
6. DEPTH OF PERFORATED PVC PIPE MAY BE ADJUSTED TO TIE INTO THE ADJACENT CONNECTION POINT TO THE BMP DRAINAGE INFRASTRUCTURE AS NEEDED.
7. PIPE PENETRATIONS THROUGH PLASTIC LINER SHALL BE SEALED ACCORDING TO ASTM D6497.

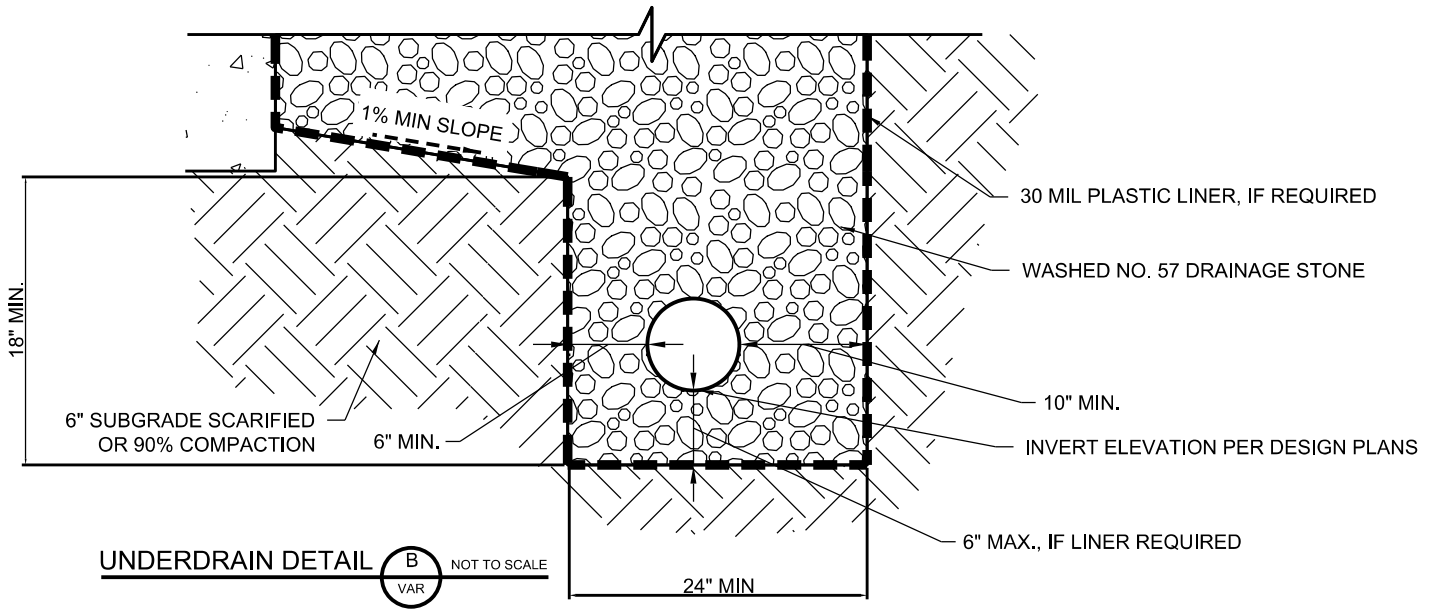


UNDERDRAIN DETAIL (B / VAR) NOT TO SCALE

| REVISION | BY | APPROVED | DATE |
|---|---|---|---|
| ORIGINAL | JT | J. NAGELVOORT | 10/15 |

CITY OF SAN DIEGO - STANDARD DRAWING

RECOMMENDED BY THE CITY OF SAN DIEGO STANDARDS COMMITTEE

COORDINATOR R.C.E. 56523 DATE

**PERVIOUS CONCRETE PAVEMENT DETAIL**

DRAWING NUMBER **SDD-128**

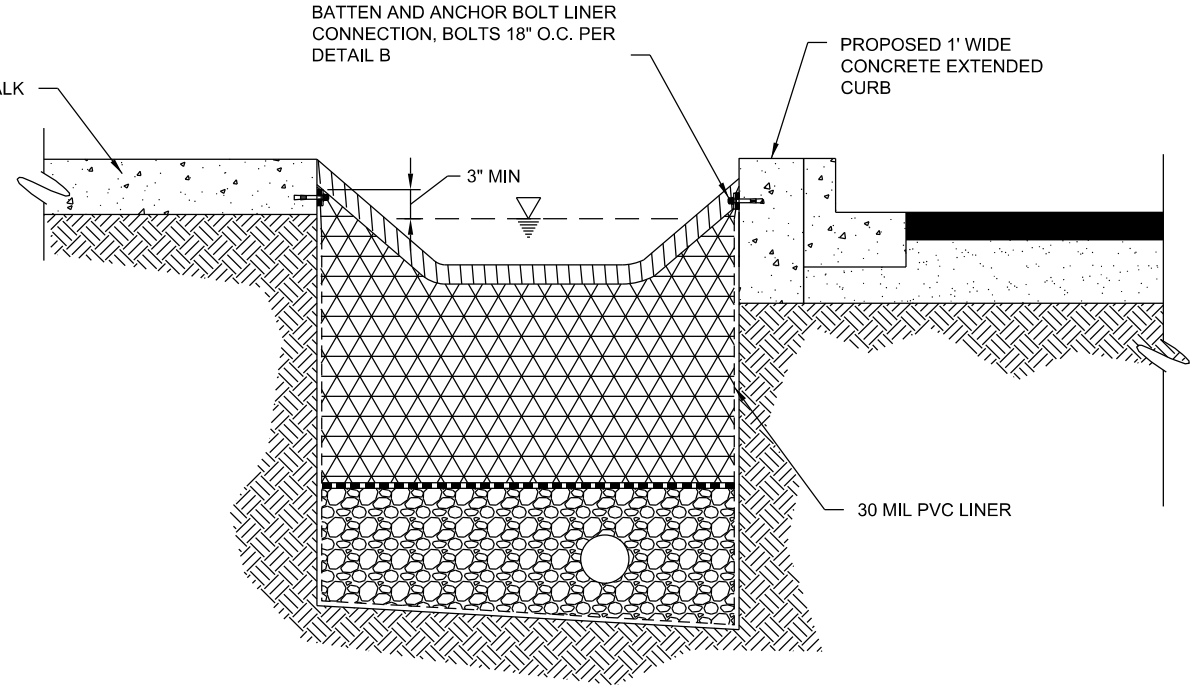


TYPICAL BIORETENTION SECTION
BATTEN LOCATIONS (A / VAR) NOT TO SCALE

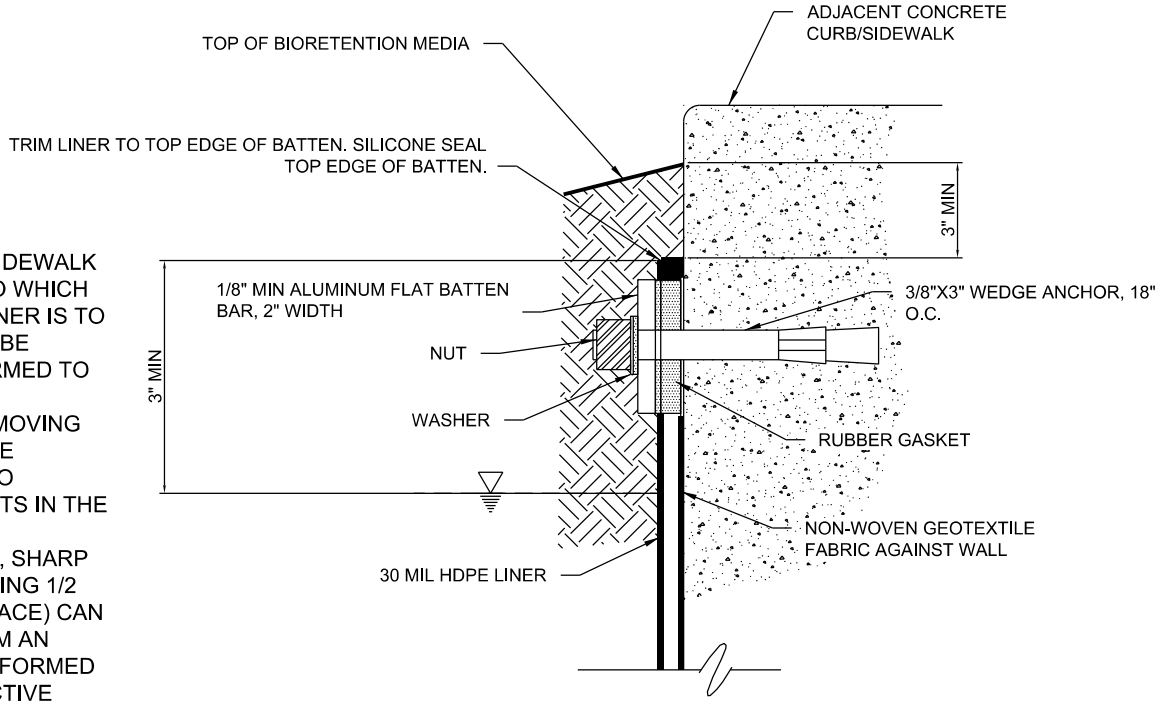


BATTEN ATTACHMENT
WITH ANCHOR BOLT (B / VAR) NOT TO SCALE

NOTES:

1. THE SURFACE OF THE EXISTING/PROPOSED SIDEWALK OR EXTENDED CURB TO WHICH THE GEOMEMBRANE LINER IS TO BE ATTACHED SHOULD BE CONSTRUCTED OR FORMED TO LIMIT DAMAGE TO THE GEOMEMBRANE BY REMOVING IRREGULARITIES ON THE CONCRETE SURFACE TO PREVENT STRESS POINTS IN THE GEOMEMBRANE.
2. IF IRREGULARITIES (I.E., SHARP PROTRUSIONS EXCEEDING 1/2 INCH FROM SURFACE FACE) CAN NOT BE REMOVED FROM AN EXISTING SAW-CUT OR FORMED STRUCTURE, A PROTECTIVE GEOTEXTILE LAYER SHOULD BE PLACED BETWEEN THE SURFACE AND THE GEOMEMBRANE.

| REVISION | BY | APPROVED | DATE |
|---|---|---|---|
| ORIGINAL | JT | J. NAGELVOORT | 10/15 |

CITY OF SAN DIEGO - STANDARD DRAWING

**VERTICAL WALL LINER ATTACHMENT**

RECOMMENDED BY THE CITY OF SAN DIEGO STANDARDS COMMITTEE

COORDINATOR R.C.E. 56523 DATE

DRAWING NUMBER **SDD-127**

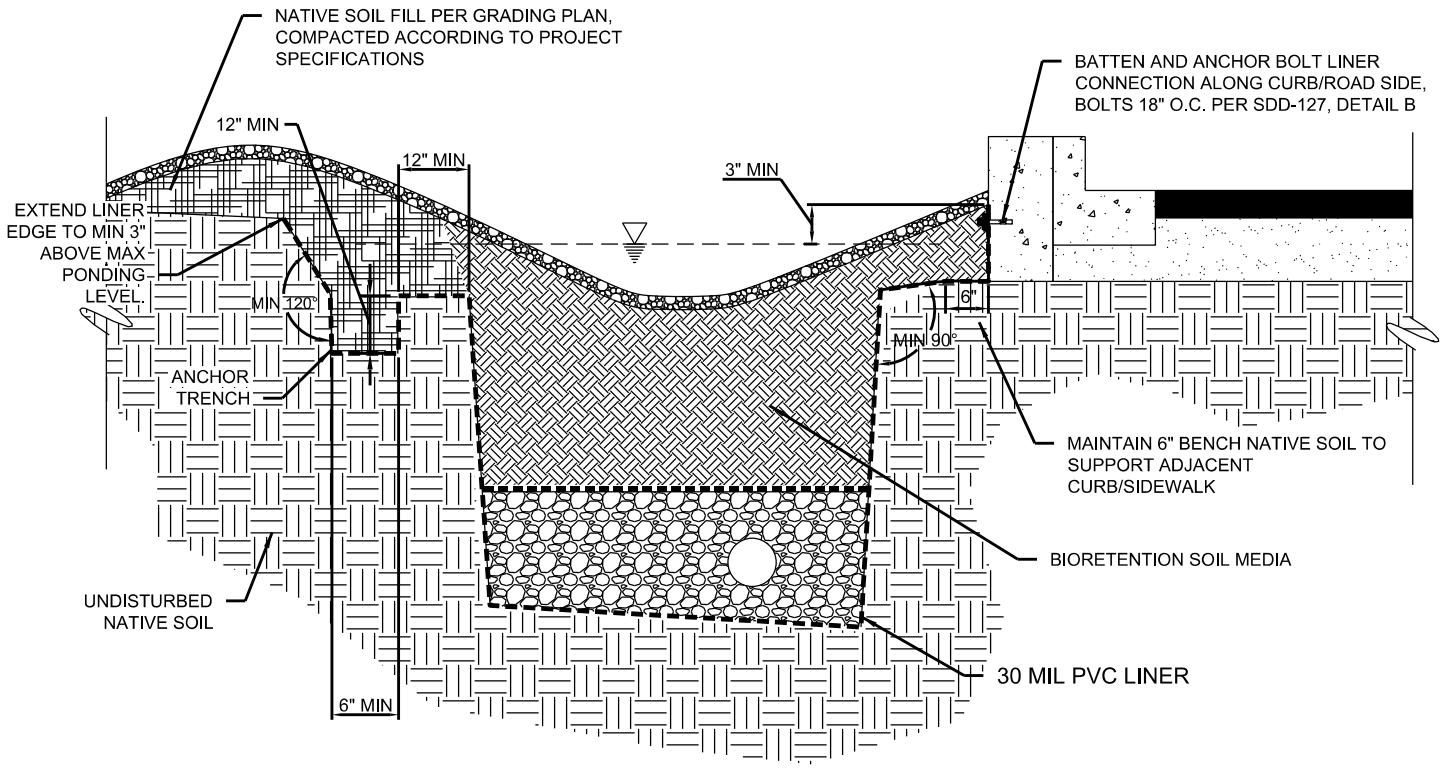


TYPICAL BIORETENTION SECTION
BATTEN LOCATIONS

A
VAR

NOT TO SCALE

| REVISION | BY | APPROVED | DATE |
|---|---|---|---|
| ORIGINAL | JT | J. NAGELVOORT | 10/15 |
| | | | |
| | | | |
| | | | |
| | | | |

CITY OF SAN DIEGO - STANDARD DRAWING

**NON-VERTICAL WALL LINER ATTACHMENT**

RECOMMENDED BY THE CITY OF SAN DIEGO STANDARDS COMMITTEE

COORDINATOR R.C.E. 56523 DATE

DRAWING NUMBER **SDD-126**

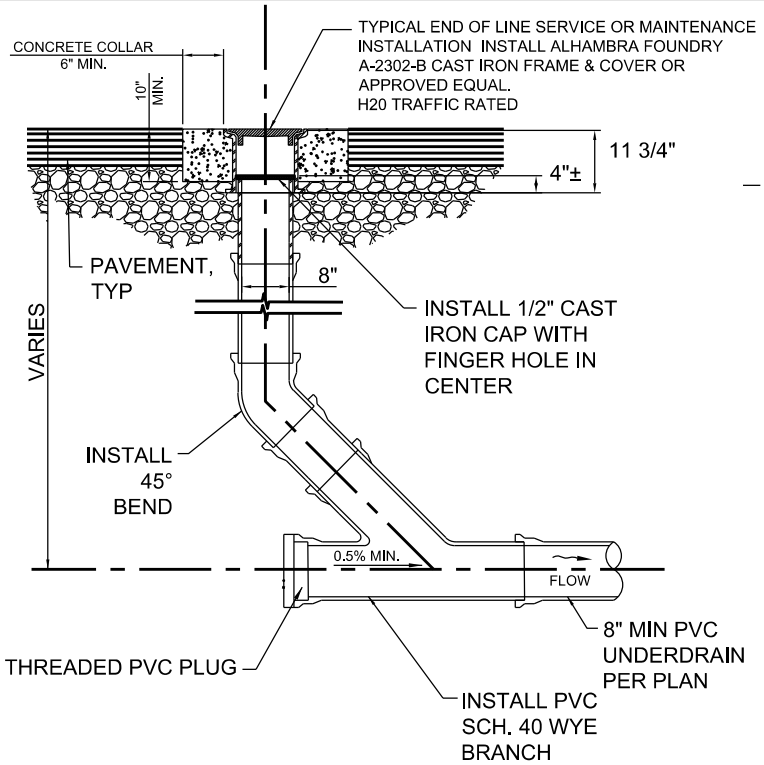


PAVEMENT AREA CLEANOUT UPSTREAM END (A / VAR) NOT TO SCALE

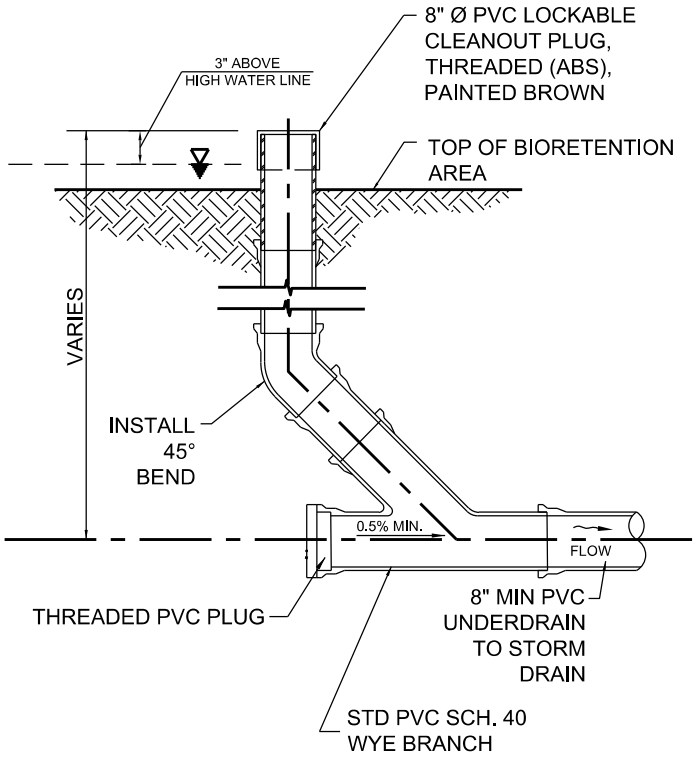


BIORETENTION AREA CLEANOUT UPSTREAM END (B / VAR) NOT TO SCALE

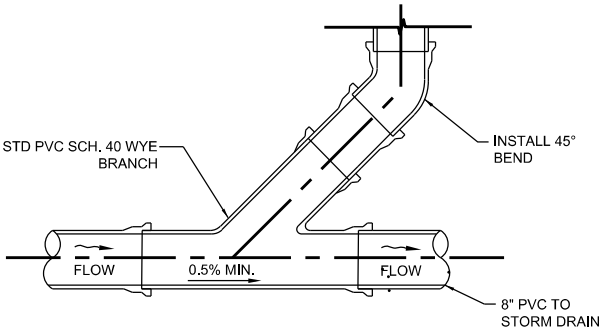


CLEANOUT MID-STREAM (C / VAR) NOT TO SCALE

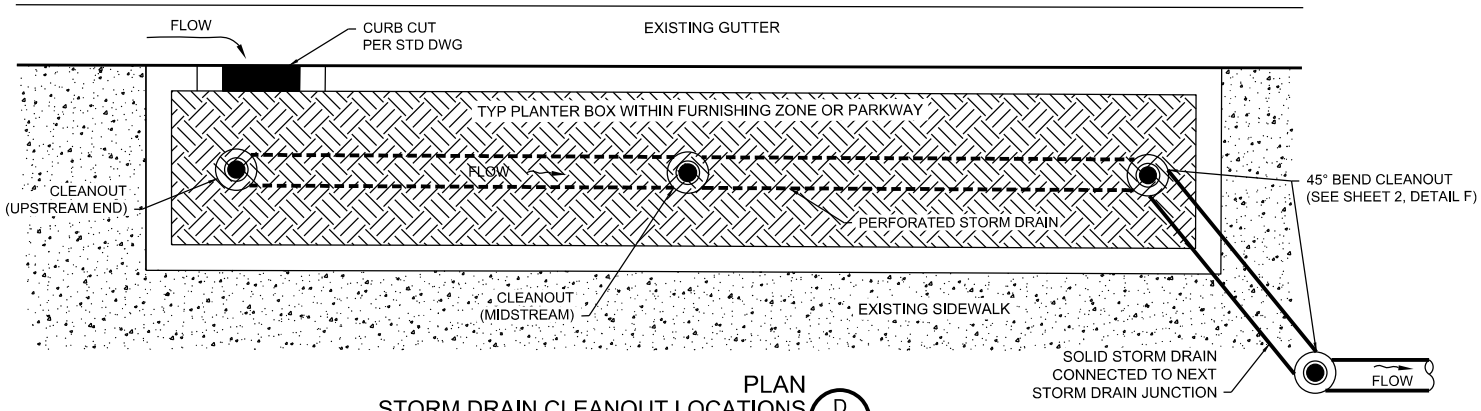


PLAN
STORM DRAIN CLEANOUT LOCATIONS (D / VAR) NOT TO SCALE

SHEET 1 OF 2

| REVISION | BY | APPROVED | DATE |
|---|---|---|---|
| ORIGINAL | JT | J. NAGELVOORT | 10/15 |

CITY OF SAN DIEGO - STANDARD DRAWING

**CLEANOUT FOR 8" STORM DRAIN PERFORATED OR SOLID**

RECOMMENDED BY THE CITY OF SAN DIEGO STANDARDS COMMITTEE

COORDINATOR R.C.E. 56523 DATE

DRAWING NUMBER **SDD-125**

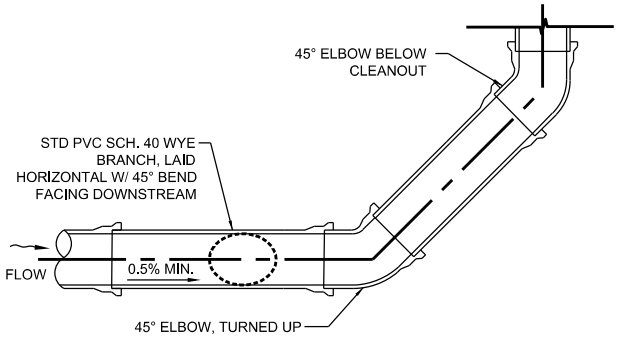


PROFILE

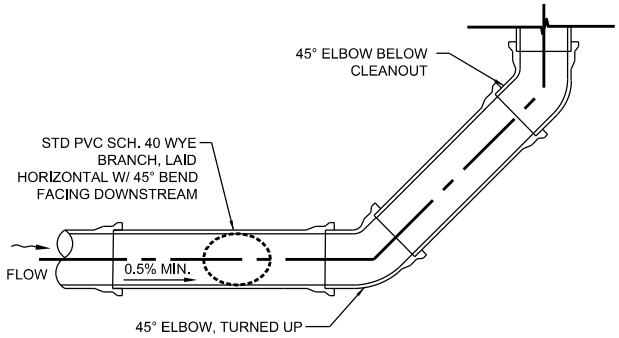


PROFILE

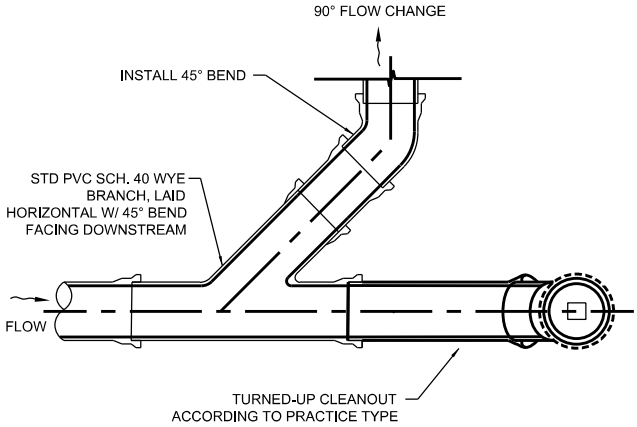


PLAN

CLEANOUT 90° BEND (E / VAR) NOT TO SCALE

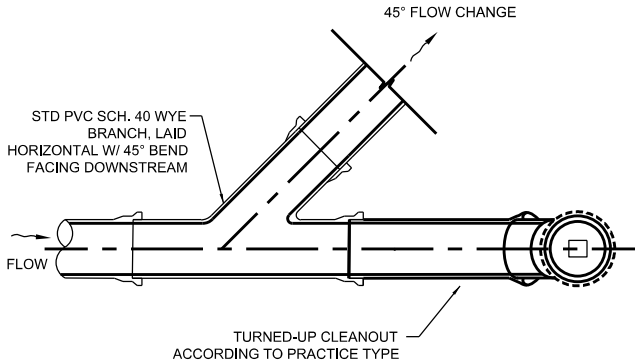


PLAN

CLEANOUT 45° BEND (F / VAR) NOT TO SCALE

NOTES:

1. PIPES AND FITTINGS SHALL BE PROPERLY ALIGNED AND MAINTAINED WHILE CONCRETE IS BEING PLACED AND ALLOWED TO HARDEN. JOINTS FOR PIPES AND FITTINGS SHALL BE ASSEMBLED PRIOR TO PLACING CONCRETE. CONCRETE FOR BEDDING, ENCASEMENT, AND WALL SUPPORT FOR PIPES AND FITTINGS SHALL BE PLACED UNIFORMLY AROUND THE PIPE AND FITTINGS AS SHOWN HEREON TO MAINTAIN PROPER ALIGNMENT, AND SHALL BE CLASS 420-C-2000.



| REVISION | BY | APPROVED | DATE |
|---|---|---|---|
| ORIGINAL | JT | J. NAGELVOORT | 10/15 |
| | | | |
| | | | |
| | | | |
| | | | |

CITY OF SAN DIEGO - STANDARD DRAWING

**CLEANOUT FOR 8" STORM DRAIN PERFORATED OR SOLID**

RECOMMENDED BY THE CITY OF SAN DIEGO STANDARDS COMMITTEE

COORDINATOR R.C.E. 56523 DATE

DRAWING NUMBER **SDD-125**

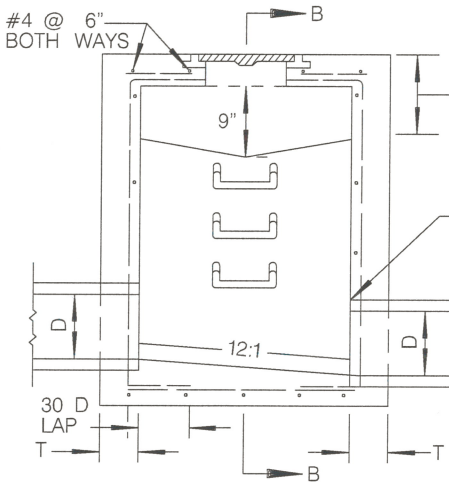


SECTION A–A

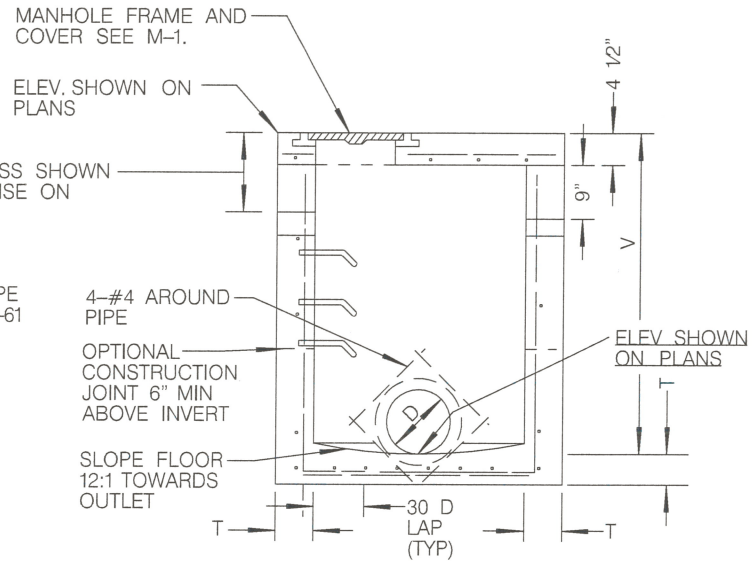


SECTION B–B

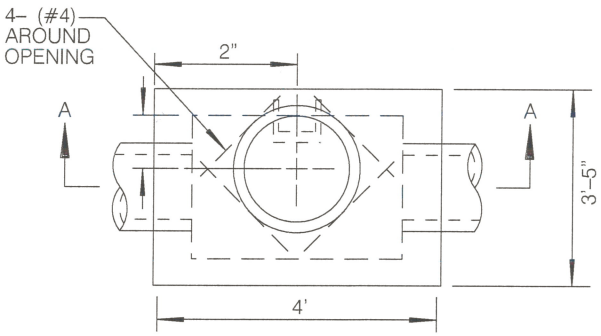


PLAN

NOTES

1. WHEN V EXCEEDS 4', STEPS SHALL BE INSTALLED.
2. EXPOSED EDGES OF CONCRETE SHALL BE ROUNDED WITH A RADIUS OF 1/2".
3. CONSTRUCT OPENINGS ON BOTH SIDES UNLESS OTHERWISE SHOWN ON PLANS.
4. MAINTAIN 1-1/2" CLEAR SPACING BETWEEN REINFORCING AND SURFACE.
5. INSTALL 1" STEEL PROTECTION BAR.
6. DIAMETER "D" SHALL BE 18" MAX, FOR LARGER DIAMETER PIPES THIS DRAWING MUST BE MODIFIED.
7. INSTALL INLET MARKER.

LEGEND ON PLANS

| REVISION | BY | APPROVED | DATE |
|---|---|---|---|
| ORIGINAL* | KA | J. NAGELVOORT | 01/12 |
| UPDATED | RB | J. NAGELVOORT | 10/15 |
| | | | |
| | | | |
| | | | |

CITY OF SAN DIEGO – STANDARD DRAWING

**CATCH BASIN - TYPE F**

RECOMMENDED BY THE CITY OF SAN DIEGO STANDARDS COMMITTEE

COORDINATOR R.C.E. 56523 DATE 10/5/15

DRAWING NUMBER **SDD-119**

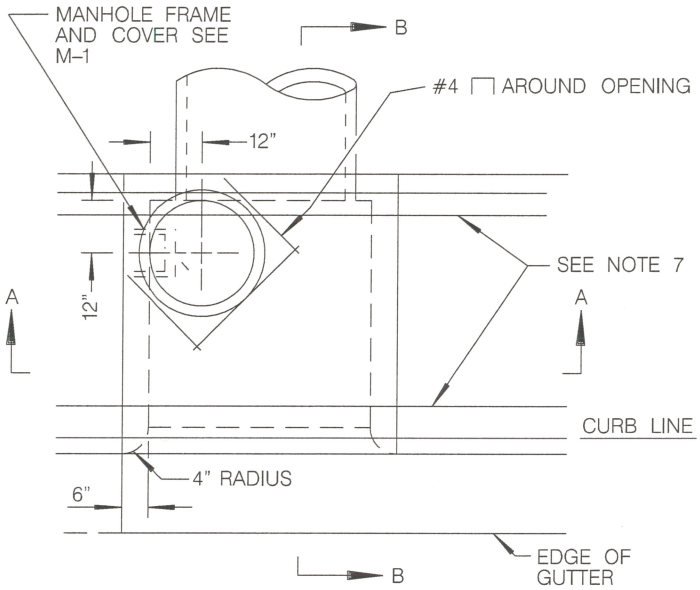


PLAN

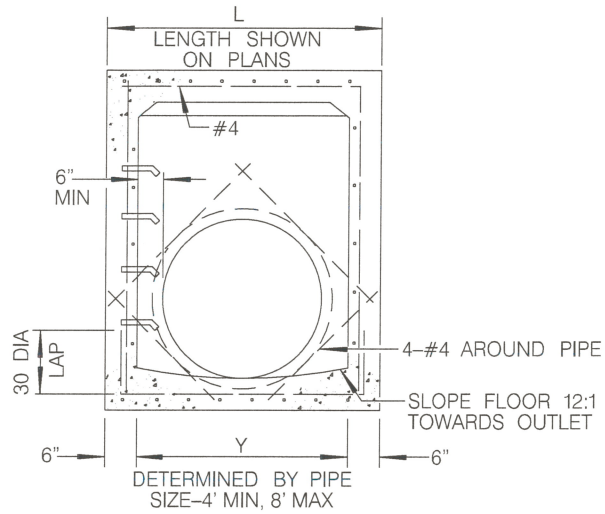


SECTION A–A

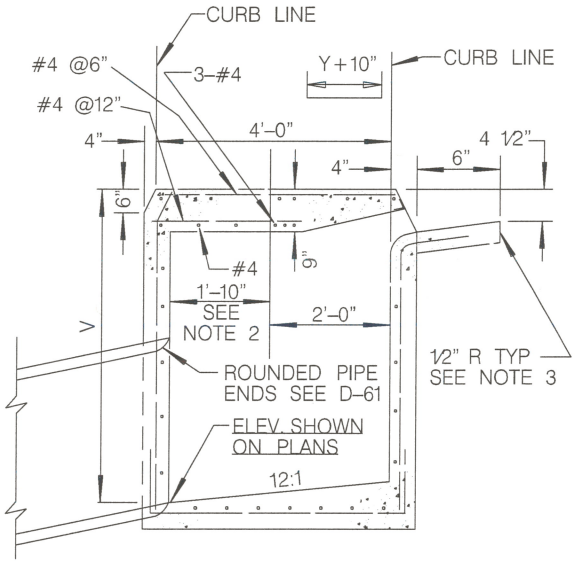


SECTION B–B

NOTES

1. DIMENSION SHOWN BECOMES 2'-0" WHEN OPENING ON BOTH SIDES. ADJUST MANHOLE AS REQUIRED.
2. EXPOSED EDGES OF CONCRETE SHALL BE ROUNDED WITH A RADIUS OF 1/2"
3. WHEN V EXCEEDS 4', STEPS SHALL BE INSTALLED.
4. CONCRETE GUTTER TO MATCH ADJACENT GUTTERS.
5. AN EXPANSION JOINT SHALL BE PLACED AT THE ENDS OF THE INLET WHERE THE CURB IS TO ADJOIN PER G-10.
6. PROVIDE 1/4" TOOLED GROOVE IN TOP SLAB IN LINE WITH BACK OF ADJACENT CURB.
7. MAINTAIN 1 1/2" CLEAR SPACING BETWEEN REINFORCING AND SURFACE UNLESS OTHERWISE NOTED.
8. INSTALL INLET MARKER.

LEGEND ON PLANS

| REVISION | BY | APPROVED | DATE |
|---|---|---|---|
| ORIGINAL* | BB | J. NAGELVOORT | 01/12 |
| UPDATED | RB | J. NAGELVOORT | 10/15 |
| | | | |
| | | | |
| | | | |

CITY OF SAN DIEGO – STANDARD DRAWING

**MEDIAN CURB INLET - TYPE J**

RECOMMENDED BY THE CITY OF SAN DIEGO STANDARDS COMMITTEE

CADungca 10/5/15

COORDINATOR R.C.E. 56523 DATE

DRAWING NUMBER **SDD-118**

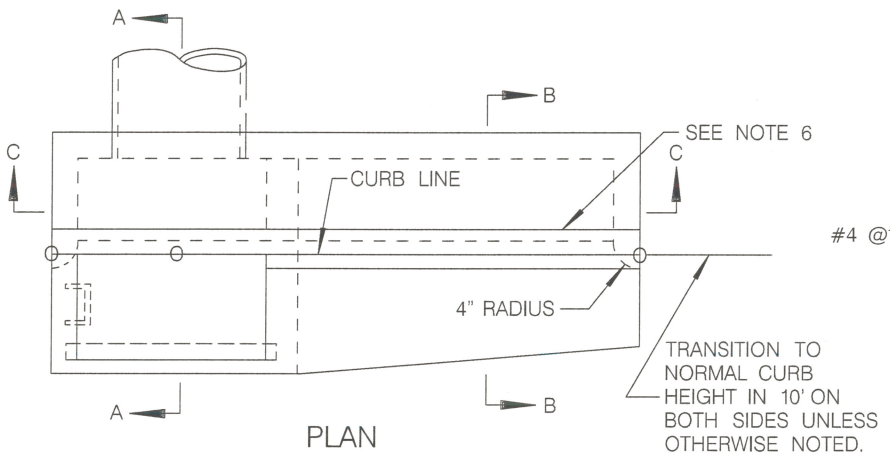


PLAN

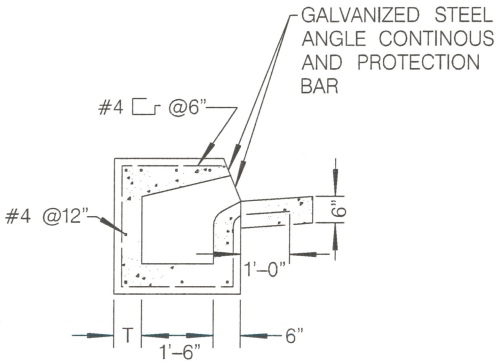


SECTION B–B

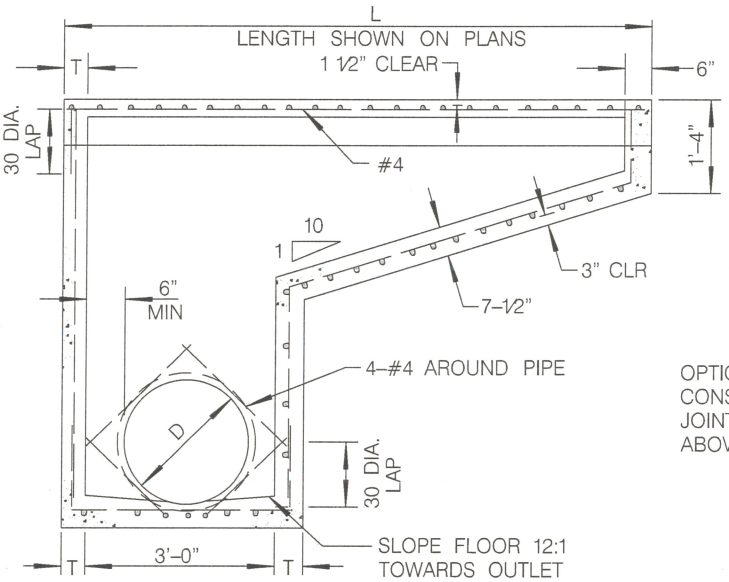


SECTION C–C

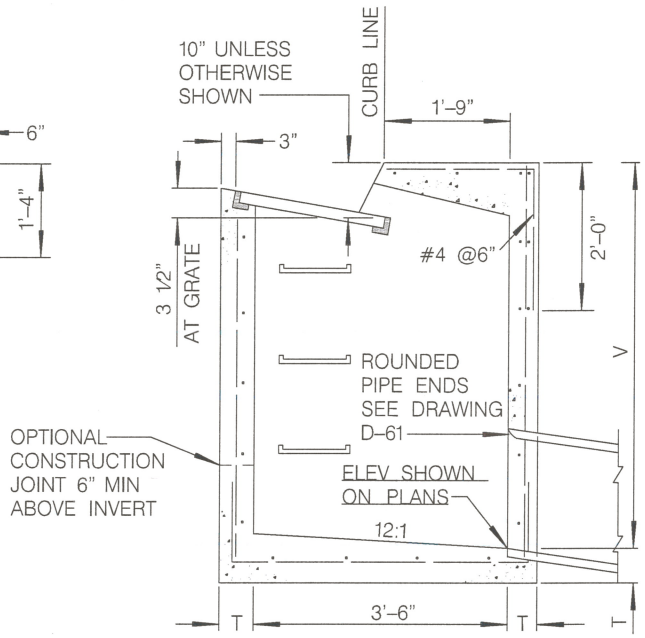


SECTION A–A

LEGEND ON PLANS

NOTES

1. TYPES ARE DESIGNATED AS FOLLOWS: (NO WING) C, (ONE WING) C–1, (TWO WINGS) C–2.
2. EXPOSED EDGES OF CONCRETE SHALL BE ROUNDED WITH A RADIUS OF 1/2".
3. WHEN V EXCEEDS 4', STEPS SHALL BE INSTALLED.
4. CONCRETE GUTTER TO MATCH ADJACENT GUTTERS.
5. AN EXPANSION JOINT SHALL BE PLACE AT THE ENDS OF THE INLET WHERE THE CURB IS TO ADJOIN PER G–10.
6. PROVIDE 1/4" TOOLED GROOVE IN TOP SLAB IN LINE WITH BACK OF ADJACENT CURB.
7. SURFACE OF TOP SLAB SHALL BE SIDEWALK FINISHED TO DRAIN TOWARD STREET AT A SLOPE OF 1/4" PER FOOT.
8. WHERE INLET IS TO BE CONSTRUCTED ON GRADE AND D–3B CONCRETE APRON IS REQUIRED, LIFT DOWN–GRADE END OF GRATE.
9. INSTALL INLET MARKER.
10. ELEVATION SHALL BE SHOWN ON PLANS WHERE INDICATED BY "O" SYMBOL.
11. DIAMETER D SHALL BE 24" MAXIMUM. FOR LARGER DIAMETER PIPES THIS DRAWING MUST BE MODIFIED.

| REVISION | BY | APPROVED | DATE |
|---|---|---|---|
| ORIGINAL* | KA | J. NAGELVOORT | 01/12 |
| UPDATED | RB | J. NAGELVOORT | 10/15 |
| | | | |
| | | | |
| | | | |

CITY OF SAN DIEGO – STANDARD DRAWING

**CURB INLET - TYPE C**

RECOMMENDED BY THE CITY OF SAN DIEGO STANDARDS COMMITTEE

CAOungca 10/5/15

COORDINATOR R.C.E. 56523 DATE

DRAWING NUMBER **SDD-117**

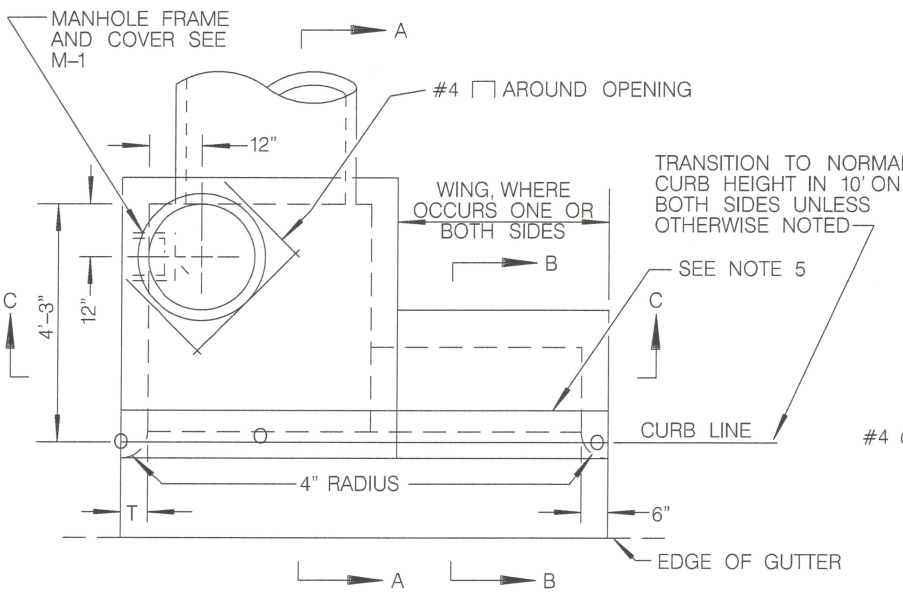


PLAN

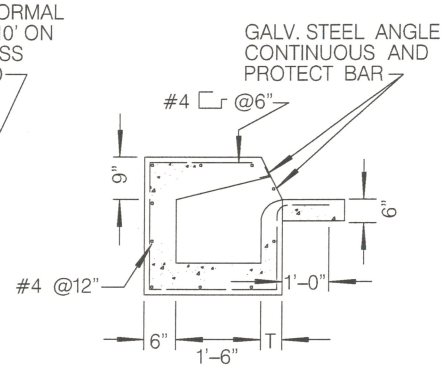


SECTION B–B

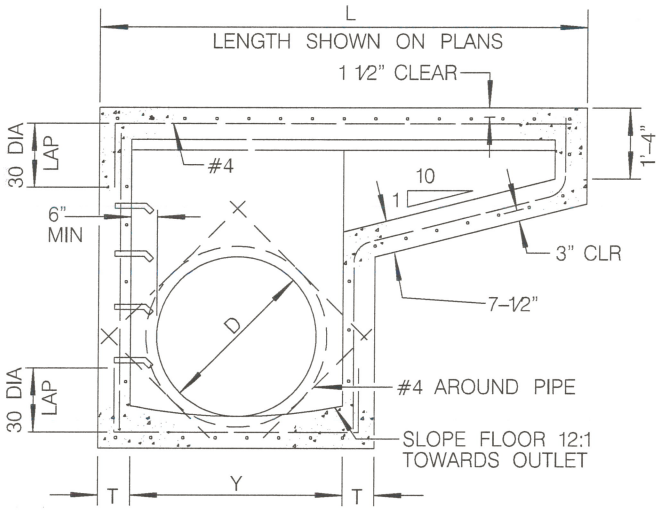


Y IS DETERMINED BY PIPE SIZE–4' MIN, 8' MAX

SECTION C–C

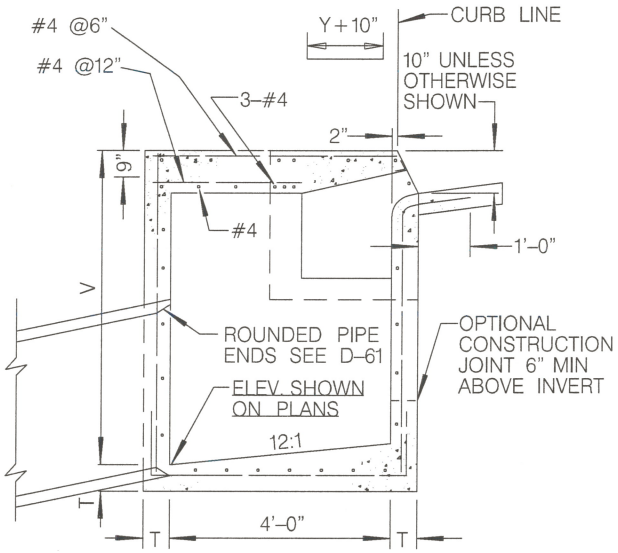


SECTION A–A

NOTES

1. TYPES ARE DESIGNATED AS FOLLOWS: (NO WING)B, (ONE WING)B–1, (TWO WINGS)B–2.
2. EXPOSED EDGES OF CONCRETE SHALL BE ROUNDED WITH A RADIUS OF 1/2".
3. WHEN V EXCEEDS 4', STEPS SHALL BE INSTALLED.
4. CONCRETE GUTTER TO MATCH ADJACENT GUTTERS.
5. AN EXPANSION JOINT SHALL BE PLACED AT THE ENDS OF THE INLET WHERE THE CURB IS TO ADJOIN PER G–10.
6. PROVIDE 1/4" TOOLED GROOVE IN TOP SLAB IN LINE WITH BACK OF ADJACENT CURB.
7. SURFACE OF TOP SLAB BE SIDEWALK FINISHED TO DRAIN TOWARD STREET AT A SLOPE OF 1/4" PER FOOT.
8. ELEVATIONS SHALL BE SHOWN ON THE PLANS WHERE INDICATED BY "O" SYMBOL.

LEGEND ON PLANS

| REVISION | BY | APPROVED | DATE |
|---|---|---|---|
| ORIGINAL* | KA | J. NAGELVOORT | 01/12 |
| UPDATED | RB | J. NAGELVOORT | 10/15 |
| | | | |
| | | | |
| | | | |

CITY OF SAN DIEGO – STANDARD DRAWING

**CURB INLET - TYPE B**

RECOMMENDED BY THE CITY OF SAN DIEGO STANDARDS COMMITTEE

CADunga 10/5/15

COORDINATOR R.C.E. 56523 DATE

DRAWING NUMBER **SDD-116**

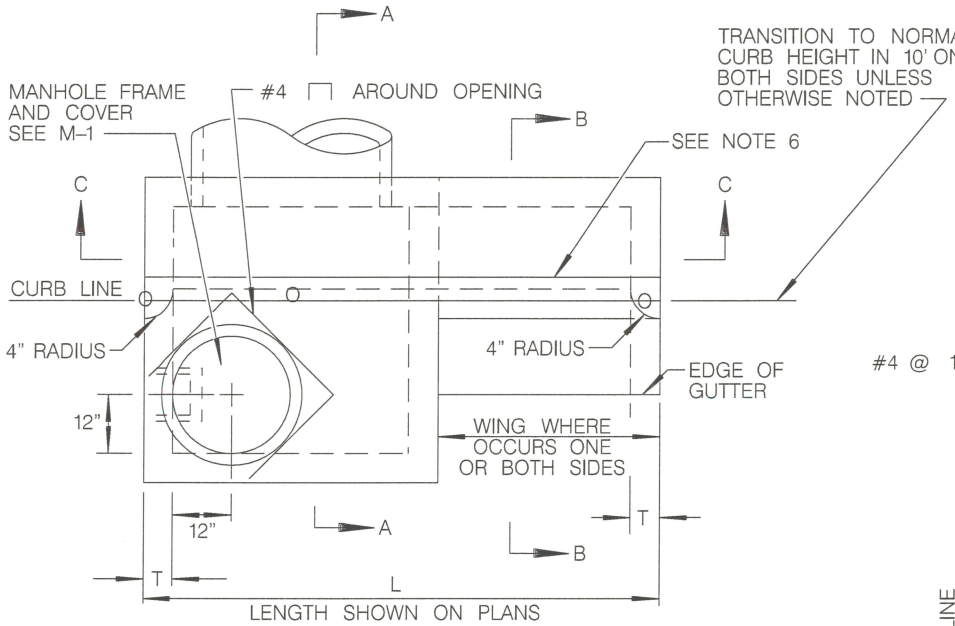


PLAN

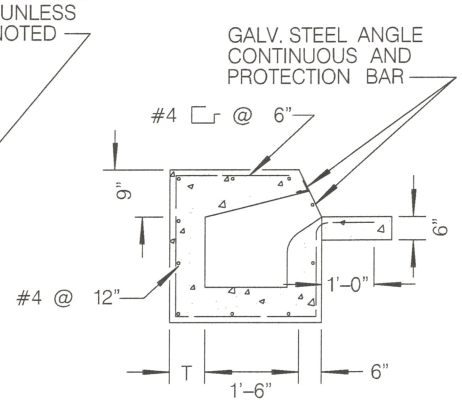


SECTION B–B

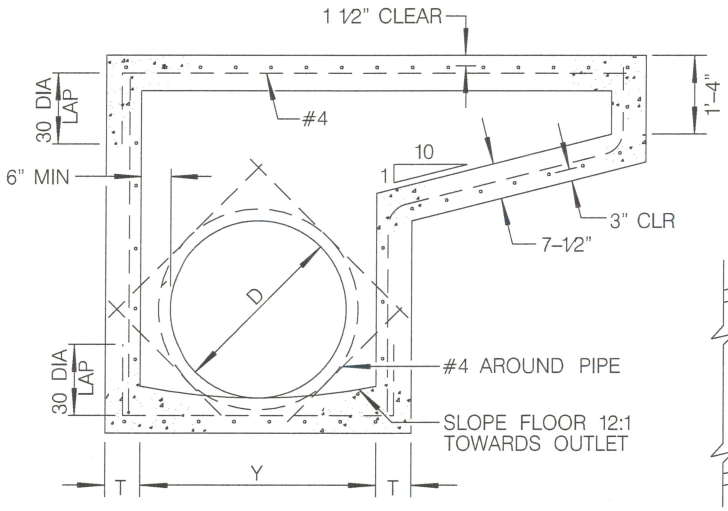


Y IS DETERMINED BY PIPE SIZE: 4' MIN, 8' MAX

SECTION C–C

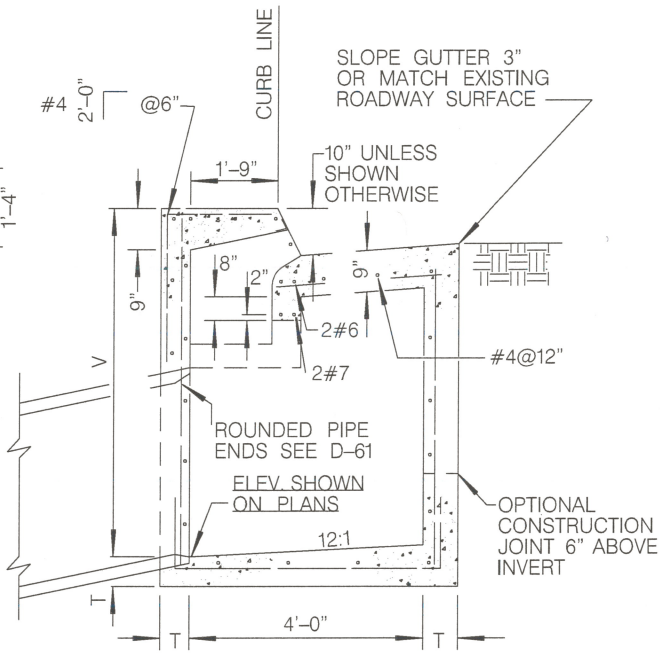


SECTION A–A

NOTES

1. TYPES ARE DESIGNATED AS FOLLOWS: (NO WING)A, (ONE WING)A–1, (TWO WINGS)A–2.
2. EXPOSED EDGES OF CONCRETE SHALL BE ROUNDED WITH A RADIUS OF 1/2".
3. WHEN V EXCEEDS 4', STEPS SHALL BE INSTALLED.
4. CONCRETE GUTTER TO MATCH ADJACENT GUTTERS
5. AN EXPANSION JOINT SHALL BE PLACED AT THE ENDS OF THE INLET WHERE THE CURB IS TO ADJOIN PER G–10.
6. PROVIDE 1/4" TOOLED GROOVE IN TOP SLAB IN LINE WITH BACK OF ADJACENT CURB.
7. SURFACE OF TOP SLAB BE SIDEWALK FINISHED TO DRAIN TOWARD STREET AT A SLOPE OF 1/4" PER FOOT.
8. ELEVATION SHALL BE SHOWN ON THE PLANS WHERE INDICATED "O" SYMBOL.
9. INSTALL INLET MARKER.

LEGEND ON PLANS

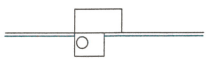


| REVISION | BY | APPROVED | DATE |
|---|---|---|---|
| ORIGINAL* | KA | J. NAGELVOORT | 01/12 |
| UPDATED | RB | J. NAGELVOORT | 10/15 |
| | | | |
| | | | |
| | | | |

CITY OF SAN DIEGO – STANDARD DRAWING

**CURB INLET - TYPE A**

RECOMMENDED BY THE CITY OF SAN DIEGO STANDARDS COMMITTEE

CAOtungca 10/5/15

COORDINATOR R.C.E. 56523 DATE

DRAWING NUMBER **SDD-115**

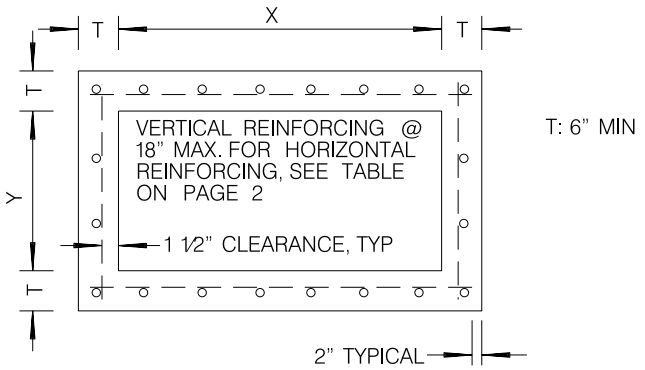


TYPICAL BOX SECTION

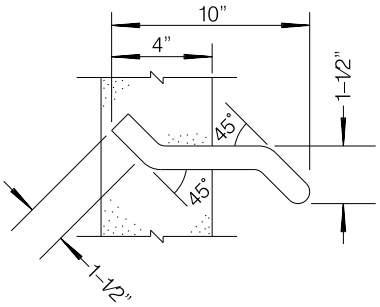


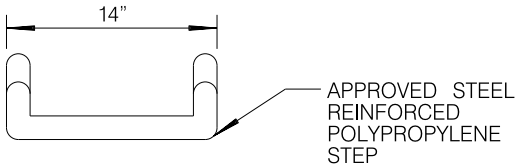


STEP DETAIL

NOTES:

1. CONCRETE SHALL BE 560-C-3250 UNLESS OTHERWISE NOTED.
2. REINFORCING STEEL SHALL COMPLY WITH THIS DRAWING UNLESS OTHERWISE SPECIFIED.
3. REINFORCING STEEL SHALL BE INTERMEDIATE GRADE DEFORMED BARS CONFORMING TO LATEST ASTM SPECIFICATIONS.
4. BENDS SHALL BE IN ACCORDANCE WITH LATEST ACI CODE.
5. MINIMUM SPLICE LENGTH FOR REINFORCING SHALL BE 30 DIAMETERS.
6. FLOOR SHALL HAVE A WOOD TROWEL FINISH AND, EXCEPT WHERE USED AS JUNCTION BOXES, SHALL HAVE A MINIMUM SLOPE OF 1:12 TOWARD THE OUTLET.
7. DEPTH V IS MEASURED FROM THE TOP OF THE STRUCTURE TO THE FLOWLINE OF THE BOX.
8. WALL THICKNESS AND REINFORCING STEEL REQUIRED MAY BE DECREASED IN ACCORDANCE WITH TABLE LOCATED ON SHEET 2.
9. WALL THICKNESS SHALL BE STEPPED ON THE OUTSIDE OF THE BOX.
10. WHEN THE STRUCTURE DEPTH V EXCEEDS 4', STEPS SHALL BE CAST INTO THE WALL AT 15" INTERVALS FROM 15" ABOVE FLOOR TO WITHIN 12" OF TOP OF STRUCTURE. PLACE STEPS IN WALL WITHOUT PIPE OPENING, OTHERWISE OVER OPENING OF SMALLEST DIAMETER.
11. ALTERNATE STEP MAY BE AN APPROVED STEEL REINFORCED POLYPROPYLENE STEP.
12. UPON APPROVAL OF THE ENGINEER, AS DEFINED BY SECTION 6703 OF THE BUSINESS AND PROFESSIONS CODE, THE USE OF PRECAST STORM STRUCTURES IS ACCEPTABLE A AN ALTERNATE TO CAST-IN-PLACE. PRECAST UNITS SHALL CONFORM TO ASTM STANDARDS AND BE MANUFACTURED IN A PERMANENT FACILITY DESIGNED FOR THAT PURPOSE.
13. TYPICAL REINFORCEMENT LAP SHALL BE 30 TIMES THE BAR DIAMETER MINIMUM. DIMENSION T SHALL BE 6" MINIMUM.
14. MARK EVERY STORM DRAIN INLET WITHIN THE PROJECT BOUNDARIES WITH ADHESIVE DECAL-DISCS ON EXISTING INLETS OR AN IMBEDED CONCRETE STAMP ON NEW INLETS.
15. ON CURB INLETS, PLACE MARKER ON TOP OF THE INLET ROOF. ON CATCH BASIN, IMPRINT STAMP NEXT TO INLET GRATE.
16. NO RECYCLED WATER SHALL ENTER INTO STORM DRAIN.



| REVISION | BY | APPROVED | DATE |
|---|---|---|---|
| ORIGINAL* | KA | J. NAGELVOORT | 01/12 |
| UPDATED | FR | J. NAGELVOORT | 07/15 |
| | | | |
| | | | |
| | | | |

CITY OF SAN DIEGO – STANDARD DRAWING

**INLETS AND CLEANOUTS**
**NOTES AND DETAILS**

RECOMMENDED BY THE CITY OF SAN DIEGO STANDARDS COMMITTEE

COORDINATOR R.C.E. 56523 DATE 7/21/15

DRAWING NUMBER **SDD-114**

| BOX SECTION HORIZONTAL REINFORCEMENT | | | |
|---|---|---|---|
| MAXIMUM SPAN X OR Y | DEPTH V | THICKNESS T | HOR. & FLR. REINF. |
| 3'–0" TO 4'–0" | 4'–0" | 6" | #4 18" |
| 4'–1" TO 7'–0" | | 6" | #4 12" |
| 7'–0" TO 8'–0" | | 6" | #4 8" |
| 3'–0" TO 4'–0" | 4'–1" TO 8'–0" | 6" | #4 18" |
| 4'–1" TO 5'–0" | | 6" | #4 12" |
| 5'–1" TO 6'–0" | | 6" | #4 8" |
| 6'–1" TO 8'–0" | | 6" | #4 6" |
| 3'–0" TO 4'–0" | 8'–1" TO 12'–0" | 6" | #4 15" |
| 4'–1" TO 5'–0" | | 8" | #4 12" |
| 5'–1" TO 6'–0" | | 8" | #4 8" |
| 6'–1" TO 8'–0" | | 8" | #4 6" |
| 3'–0" TO 4'–0" | 12'–1" TO 16'–0" | 8" | #4 12" |
| 4'–1" TO 5'–0" | | 8" | #4 12" |
| 5'–1" TO 6'–0" | | 8" | #4 8" |
| 6'–1" TO 7'–0" | | 8" | #4 6" |
| 7'–1" TO 8'–0" | | 8" | #5 8" |
| 3'–0" TO 4'–0" | 16'–1" TO 20'–0" | 8" | #4 12" |
| 4'–1" TO 5'–0" | | 10" | #4 12" |
| 5'–1" TO 6'–0" | | 10" | #4 8" |
| 6'–1" TO 7'–0" | | 10" | #4 6" |
| 7'–1" TO 8'–0" | | 10" | #5 8" |
| 3'–0" TO 4'–0" | 20'–1" TO 24'–0" | 8" | #4 12" |
| 4'–1" TO 5'–0" | | 10" | #4 12" |
| 5'–1" TO 6'–0" | | 10" | #4 8" |
| 6'–1" TO 7'–0" | | 10" | #4 6" |
| 7'–1" TO 8'–0" | | 12" | #5 8" |



| REVISION | BY | APPROVED | DATE |
|---|---|---|---|
| ORIGINAL* | KA | J. NAGELVOORT | 01/12 |
| UPDATED | FR | J. NAGELVOORT | 07/15 |

CITY OF SAN DIEGO – STANDARD DRAWING

**INLETS AND CLEANOUTS NOTES AND DETAILS**

RECOMMENDED BY THE CITY OF SAN DIEGO STANDARDS COMMITTEE

COORDINATOR R.C.E. 56523 7/21/15 DATE

DRAWING NUMBER **SDD-114**

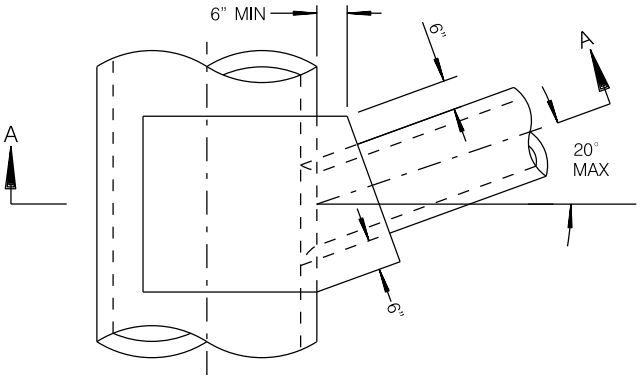


PLAN
SKEWED CONNECTION

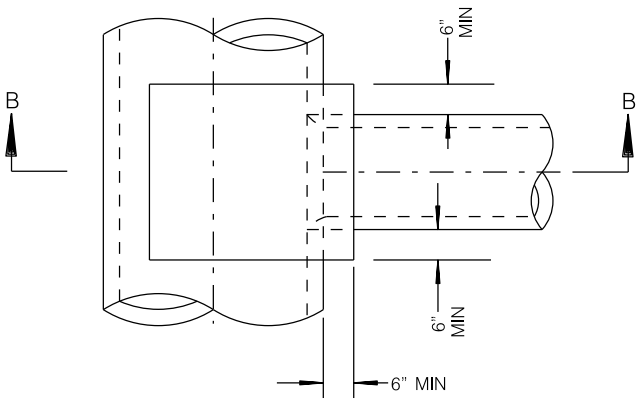


PLAN
PERPENDICULAR CONNECTION

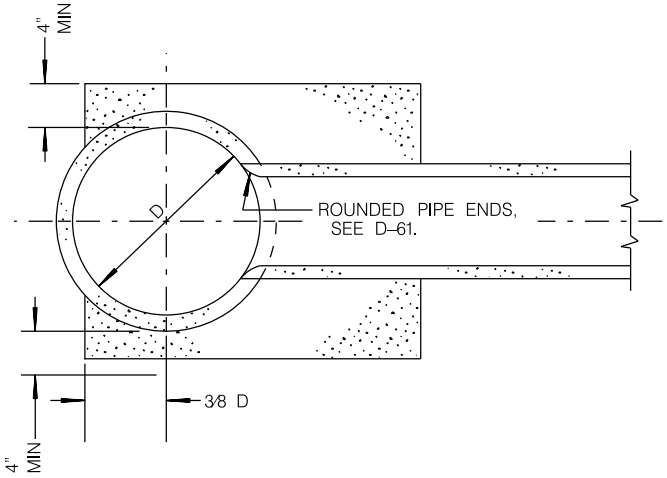


SECTION A–A

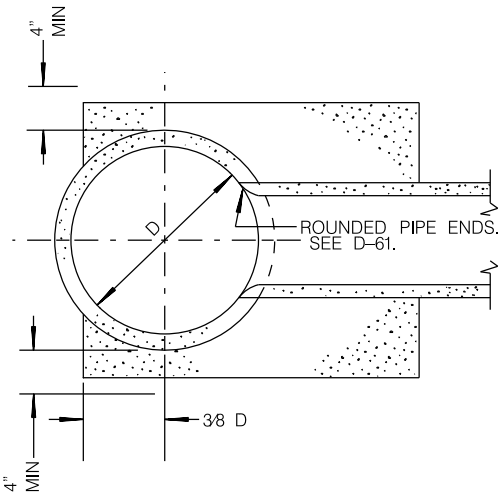


SECTION B–B

NOTES:

1. THE END OF CONNECTING PIPE SHALL NOT PROJECT INTO THE WATERWAY OF THE LARGER PIPE.
2. THE LARGER PIPE SHALL NOT BE LESS THAN 24" ID.
3. THE OD OF SMALLER PIPE SHALL NOT BE MORE THAN 2/3 THE SIZE OF THE LARGER PIPE ID.
4. CONCRETE SHALL BE 470–C–2000.

LEGEND ON PLANS

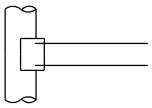

| REVISION | BY | APPROVED | DATE |
|---|---|---|---|
| UPDATED* | KA | J. NAGELVOORT | 01/12 |
| | | | |
| | | | |
| | | | |
| | | | |

CITY OF SAN DIEGO – STANDARD DRAWING

**CONCRETE LUG**

RECOMMENDED BY THE CITY OF SAN DIEGO STANDARDS COMMITTEE

H. Hadi 1/31/2012

COORDINATOR R.C.E. 65271 DATE

DRAWING NUMBER **SDD-113**

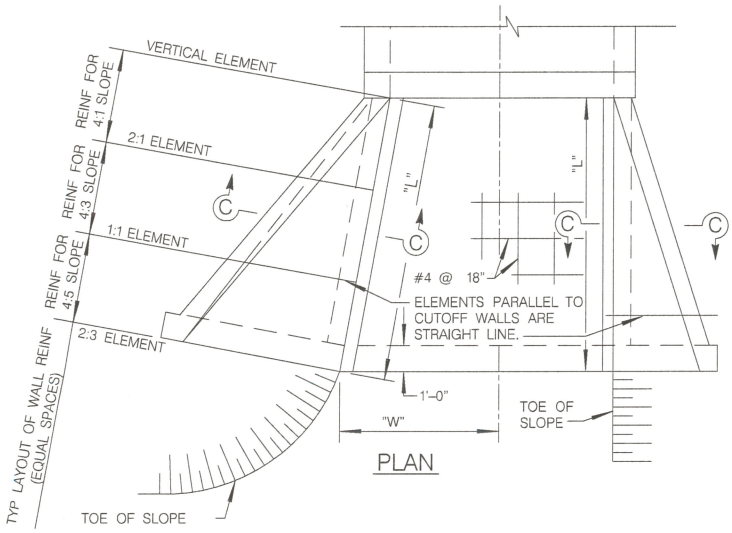


PLAN

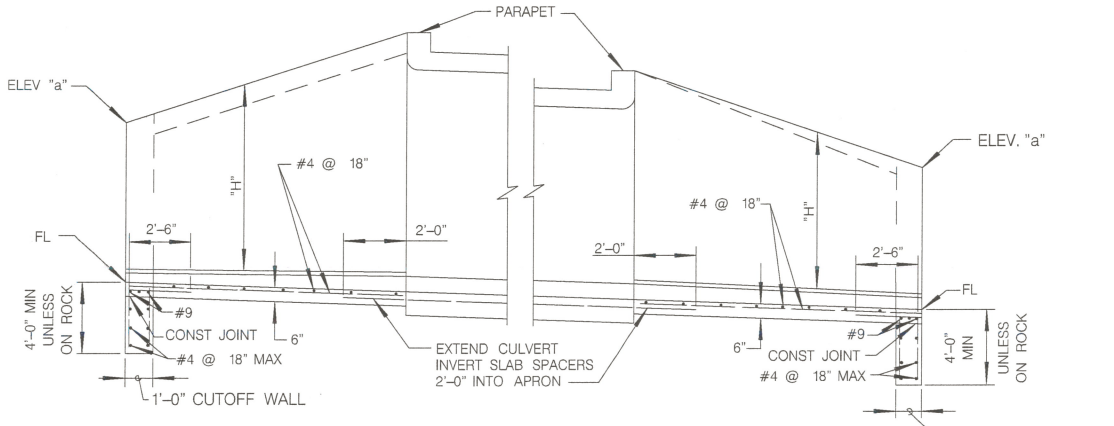


TYPICAL WITH STIFFENING BEAM TYPICAL WITHOUT STIFFENING BEAM

PART LONGITUDAL SECTION

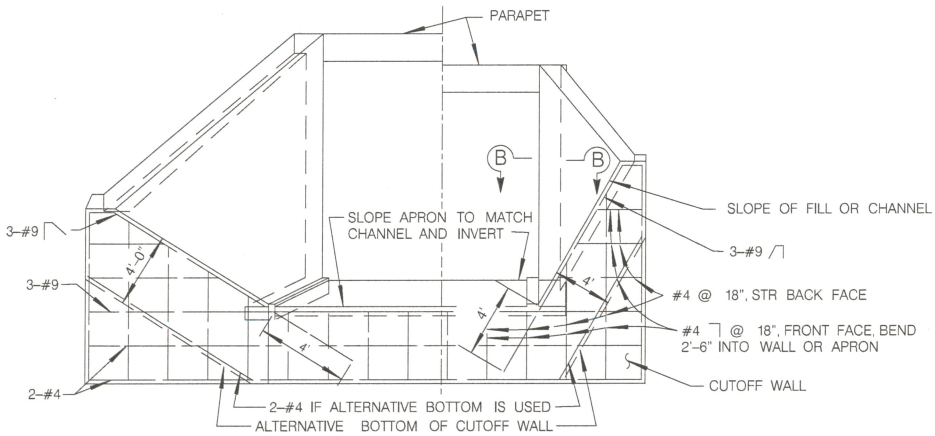


END ELEVATION

SHEET 1 OF 3

| REVISION | BY | APPROVED | DATE |
|---|---|---|---|
| ORIGINAL | KA | J. NAGELVOORT | 01/12 |
| UPDATED | RB | J. NAGELVOORT | 10/15 |
| | | | |
| | | | |
| | | | |

CITY OF SAN DIEGO – STANDARD DRAWING

**BOX CULVERT WARPED WINGWALL**

RECOMMENDED BY THE CITY OF SAN DIEGO STANDARDS COMMITTEE

CMDungca 10/5/15

COORDINATOR R.C.E. 56523 DATE

DRAWING NUMBER **SDD-112**

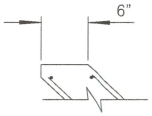


WITHOUT STIFFENING BEAM

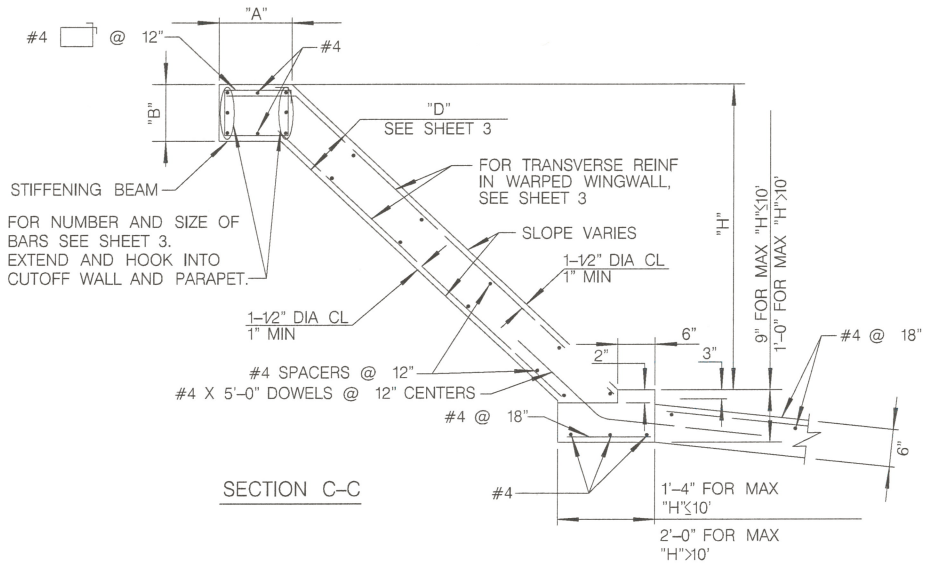


SECTION C–C

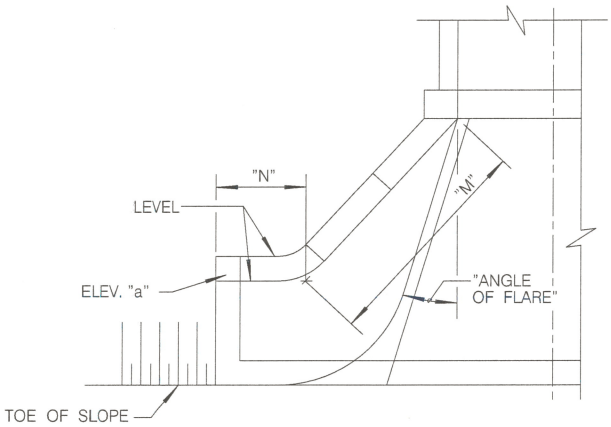


ALTERNATIVE WARPED WINGWALL

USE WHERE ADDITIONAL PROTECTION TO TOE OF EMBANKMENT IS REQIRED

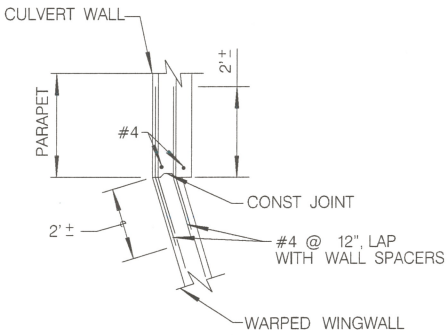


SECTION B–B

NOTES:

1. WALLS DESIGNED FOR 2' SURCHAGE; EARTH DENSITY=120 #/CU. FT.; EQUIVALENT FLUID PRESSURE = 36 #/CU. FT.
2. VARY "D" OF WARPED WALL UNIFORMLY FROM THAT CUTOFF WALL TO THAT AT CULVERT, FOR MAXIMUM "H" >12' (3.66)
3. WHERE ABRASION IS ANTICIPATED INCREASE APRON THICKNESS TO 7" MINIMUM TO PROVIDE 2" MINIMUM REINFORCEMENT COVERAGE.
4. DIMENSIONS "L", "W", "H", "N", ELEVATION "a", "ANGLE OF FLARE", AND END "SLOPE (AS APPLY) ARE SHOWN ON THE PLANS.
5. CONCRETE SHALL BE 560–C–3250.
6. CHANNEL FENCING IS REQUIRED PER SDM–112 OR SDM–114. UNLESS OTHERWISE SHOWN ON THE PLANS, A CHAIN LINK FENCE 6' IN HEIGHT, WITH A TOP RAIL SET AT 6" INSIDE EASEMENT BOUNDARY LINES SHALL BE CONSTRUCTED ON BOTH SIDES, INCLUDING BOX CULVERTS OR ANY OTHER STRUCTURE AT THE END OF THE CHANNEL. ACCESS POINTS SHALL BE PROVIDED ON BOTH SIDES AT 500' MAXIMUM INTERVALS. TWO 10' GATES OR ON 20' GATE FOR VEHICULAR ACCES ARE REQUIRED AT A MAXIMUM OF 1000' INTERVALS AND BE PLACED ON EITHER SIDE. THE REMAINING ACCESS POINTS SHALL BE 4' GATES.



| REVISION | BY | APPROVED | DATE |
|---|---|---|---|
| ORIGINAL* | KA | J. NAGELVOORT | 01/12 |
| UPDATED | RB | J. NAGELVOORT | 10/15 |
| | | | |
| | | | |
| | | | |

CITY OF SAN DIEGO – STANDARD DRAWING

**BOX CULVERT WARPED WINGWALL**

RECOMMENDED BY THE CITY OF SAN DIEGO STANDARDS COMMITTEE

CADungca 10/5/15

COORDINATOR R.C.E. 56523 DATE

DRAWING NUMBER **SDD-112**

WARPED WINGWALLS – U.S. MEASUREMENT TABLE ONLY

| WALL DIMENSIONS AND REINFORCING | | | | | | | | |
|---|---|---|---|---|---|---|---|---|
| Element Slope | "H" | 8'or less | 10' | 12' | 14' | 16' | 18' | 20' |
| 1/4:1 | Front face reinf<br>Rear face reinf | #4@12<br>#4@12 | #4@7<br>#4@12 | #5@7<br>#4@12 | #5@5<br>#4@12 | #6@6<br>#4@12 | #7@7<br>#4@12 | #7@6<br>#4@12 |
| 3/4:1 | Front face reinf<br>Rear face reinf | #4@12<br>#4@12 | #4@12<br>#4@12 | #4@12<br>#4@12 | #4@12<br>#4@10 | #4@10<br>#4@7 | #4@8<br>#4@6 | #4@6<br>#5@8 |
| 1–1/4:1 | Front face reinf<br>Rear face reinf | #4@12<br>#4@8 | #4@12<br>#4@8 | #4@12<br>#4@5 | #4@12<br>#5@6 | #4@12<br>#6@7 | #4@12<br>#6@6 | #4@12<br>#7@6 |
| "D" at Cutoff Wall | | 6" | 6" | 6" | 7–1/2" | 8" | 9–1/2" | 11" |
| "D" at Culvert | | 6" | 6" | 6" | 8" | 9–1/2" | 11" | 1'–1" |

| STIFFENING BEAM DIMENSIONS AND REINFORCING | | | | | | | | | |
|---|---|---|---|---|---|---|---|---|---|
| "H" max \ "L" | 12' | 14' | 16' | 18' | 20' | 25' | 30' | 35' | 40' or more |
| 6' | No beam. Place 2–#6 in each face along top of wall. | | | | | | | | |
| 8' | | | | "A" = 1'–0" | | | | | |
| 10' | | | | | | | "A" = 1'–6" | | |
| 12' | | | | "B" = 9" | | | | | |
| 14' | Total 6–#6 | | | | "B" = 1'–0" | | | "A" = 1'–10" | |
| 16' | | | | | | | "B" = 1'–0" | | "A" = 2'–0" |
| 18' | | | | Total 6–#7 | | Total 6–#8 | | "B" = 1'–6" | |
| 20' | | | | | | | Total 8–#9 | | |

CITY OF SAN DIEGO – STANDARD DRAWING

# BOX CULVERT WARPED WINGWALL

| REVISION | BY | APPROVED | DATE |
|---|---|---|---|
| ORIGINAL* | KA | J. NAGELVOORT | 01/12 |
| UPDATED | RB | J. NAGELVOORT | 10/15 |

RECOMMENDED BY THE CITY OF SAN DIEGO STANDARDS COMMITTEE

COORDINATOR C.A. Lingau R.C.E. 56523 DATE 10/5/15

DRAWING NUMBER SDD-112

SHEET 3 OF 3

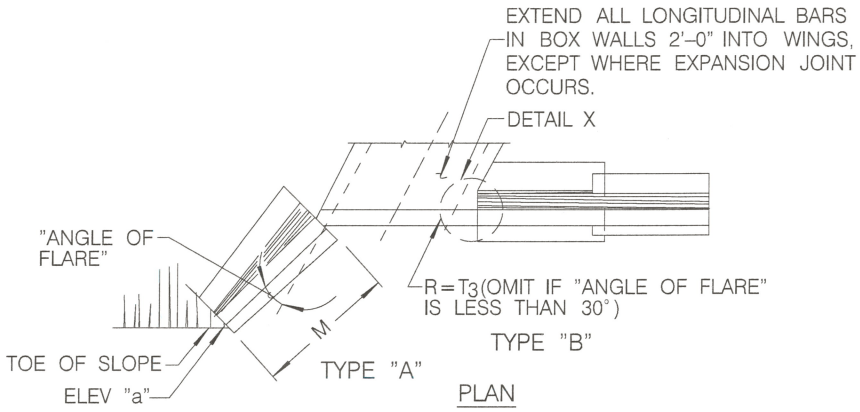


PLAN

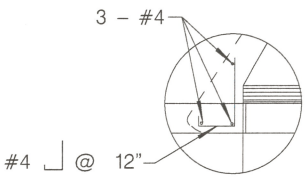


Detail X

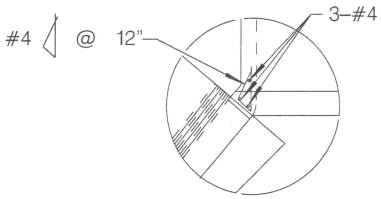


Detail Y

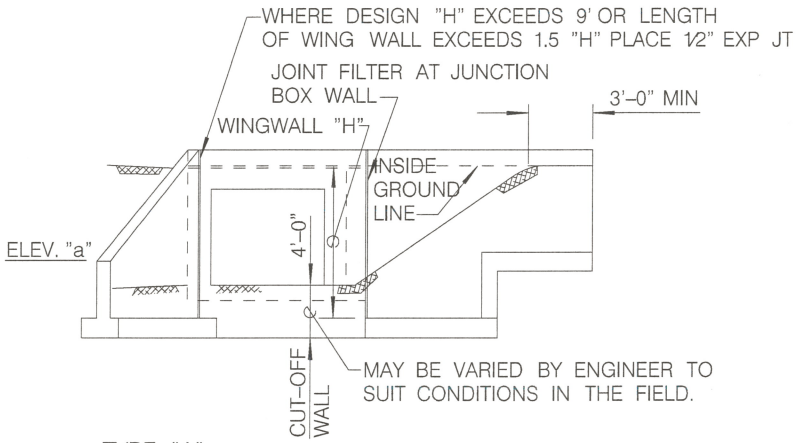


END ELEVATION

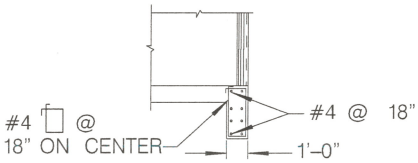


SEC B-B

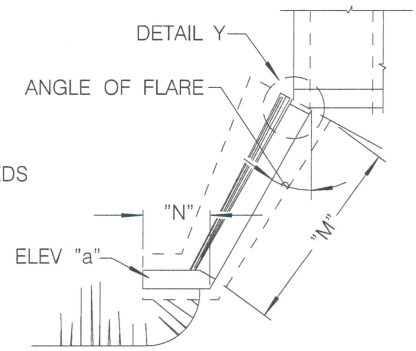


NOTE:
WHERE 1 1/2:1 SURCHARGE EXCEEDS 5', USE TYPE 2 RETAINING WALL.

TYPE "C"

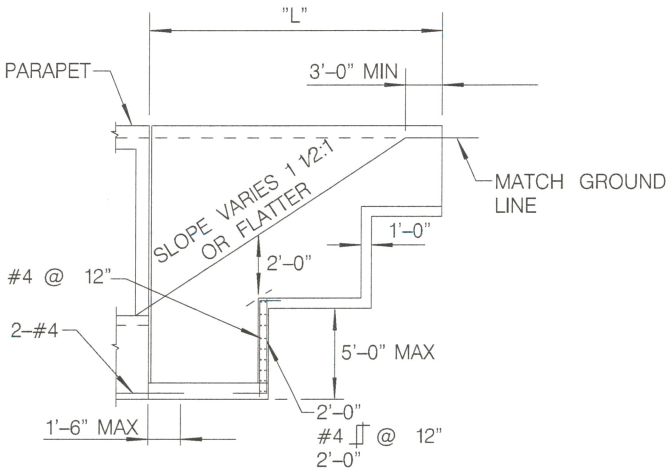


ELEVATION

NOTE:

CHANNEL FENCING IS REQUIRED PER SDM-112 OR SDM-114. UNLESS OTHERWISE SHOWN ON THE PLANS, A CHAIN LINK FENCE 6' IN HEIGHT, WITH A TOP RAIL SET AT 6" INSIDE EASEMENT BOUNDARY LINES SHALL BE CONSTRUCTED ON BOTH SIDES, INCLUDING BOX CULVERTS OR ANY OTHER STRUCTURE AT THE END OF THE CHANNEL. ACCESS POINTS SHALL BE PROVIDED ON BOTH SIDES AT 500' MAXIMUM INTERVALS. TWO 10' GATES OR ONE 20' GATE FOR VEHICULAR ACCESS ARE REQUIRED AT A MAXIMUM OF 1000' INTERVALS AND SHALL BE PLACED ON EITHER SIDE. THE REMAINING ACCESS POINTS SHALL BE 4' GATES.

SHEET 1 OF 6

| REVISION | BY | APPROVED | DATE |
|---|---|---|---|
| ORIGINAL* | KA | J. NAGELVOORT | 01/12 |
| UPDATED | RB | J. NAGELVOORT | 10/15 |
| | | | |
| | | | |
| | | | |

CITY OF SAN DIEGO – STANDARD DRAWING

**BOX CULVERT WINGWALL**

RECOMMENDED BY THE CITY OF SAN DIEGO STANDARDS COMMITTEE

CHOungca 10/5/15

COORDINATOR R.C.E. 56523 DATE

DRAWING NUMBER **SDD-111**

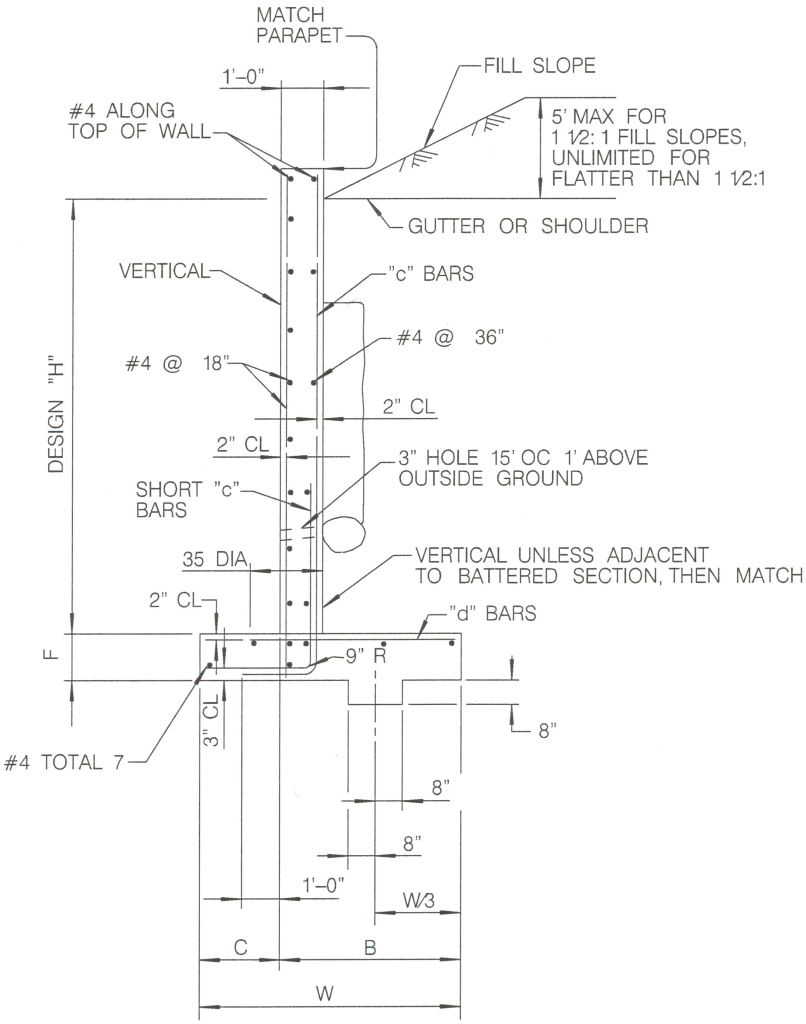


TYPICAL SECTION
H = 4'-0" THRU 12'-0"

SHEET 2 OF 6

| REVISION | BY | APPROVED | DATE |
|---|---|---|---|
| ORIGINAL* | KA | J. NAGELVOORT | 01/12 |
| UPDATED | AR | J. NAGELVOORT | 10/15 |
| | | | |
| | | | |
| | | | |

CITY OF SAN DIEGO – STANDARD DRAWING

**BOX CULVERT WINGWALL**

RECOMMENDED BY THE CITY OF SAN DIEGO STANDARDS COMMITTEE

CHDungca 10/5/15

COORDINATOR R.C.E. 56523 DATE

DRAWING NUMBER **SDD-111**

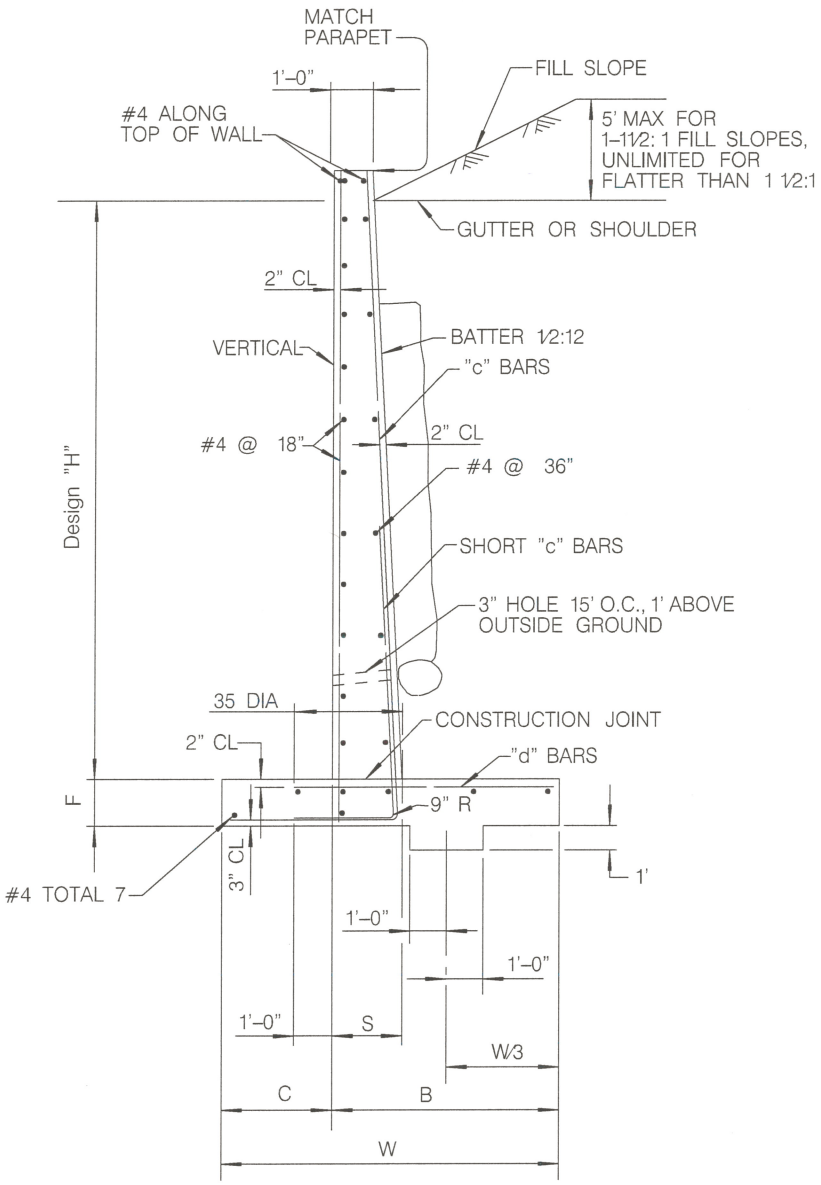


TYPICAL SECTION
H=13'-0" THRU 16'-0"

SHEET 3 OF 6

| REVISION | BY | APPROVED | DATE |
|---|---|---|---|
| ORIGINAL* | KA | J. NAGELVOORT | 01/12 |
| UPDATED | AR | J. NAGELVOORT | 10/15 |
| | | | |
| | | | |
| | | | |

CITY OF SAN DIEGO – STANDARD DRAWING

**BOX CULVERT WINGWALL**

RECOMMENDED BY THE CITY OF SAN DIEGO STANDARDS COMMITTEE

CADungca 10/5/15

COORDINATOR R.C.E. 56523 DATE

DRAWING NUMBER **SDD-111**

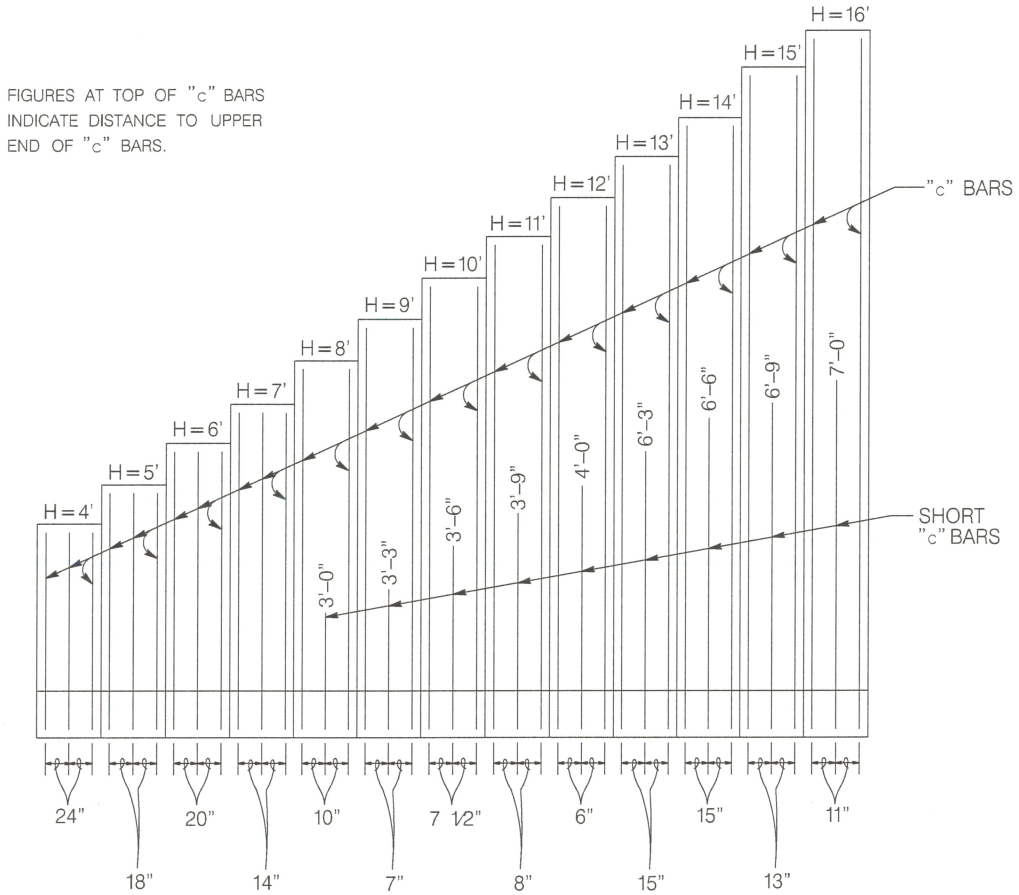


TYPICAL LAYOUT EXAMPLE 1

SHEET 4 OF 6

| REVISION | BY | APPROVED | DATE |
|---|---|---|---|
| ORIGINAL* | KA | J. NAGELVOORT | 01/12 |
| UPDATED | AR | J. NAGELVOORT | 10/15 |
| | | | |
| | | | |
| | | | |

CITY OF SAN DIEGO – STANDARD DRAWING

**BOX CULVERT WINGWALL**

RECOMMENDED BY THE CITY OF SAN DIEGO STANDARDS COMMITTEE

CABunga 10/5/15

COORDINATOR R.C.E. 56523 DATE

DRAWING NUMBER **SDD-111**

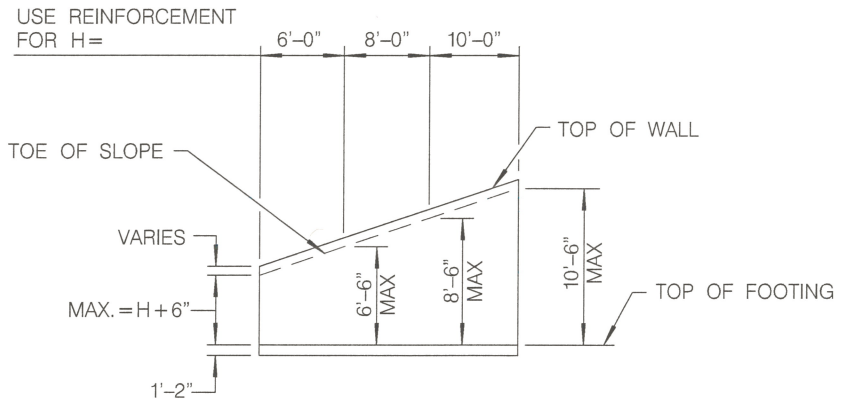


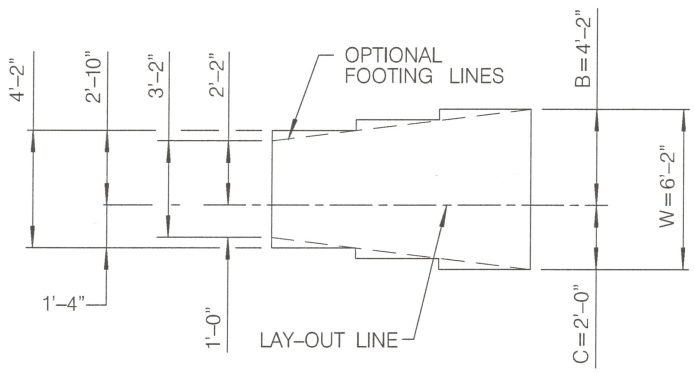


## TYPICAL LAYOUT EXAMPLE 2

NOTES:

1. UNIT STRESSES: $f_s = 20{,}000$ PSI, $f_c = 1{,}200$ PSI, $n = 10$
   MAXIMUM TOE PRESSURE = 1 1/2 TONS/SQ. FT.
   ELEVATIONS, LENGTH AND ANGLE OF FLARE OF WINGS MAY BE VARIED BY THE ENGINEER TO SUIT CONDITIONS ENCOUNTERED IN THE FIELD.

2. WALLS DESIGNED FOR 2'-0" LIVE LOAD SURCHARGE, 1 1/2:1 SLOPING SURCHARGE NOT TO EXCEED 5'-0" IN ELEVATION PLUS 2'-0" LIVE LOAD SURCHARGE, OR UNLIMITED 2:1 SURCHARGE. DIMENSIONS "H", "L", "M", "N", ELEVATION "A" AND "ANGLE OF FLARE" (AS APPLY) ARE SHOWN ON THE PLANS.

3. WALL HEIGHT MAY BE EXCEEDED BY 6" BEFORE GOING TO NEXT GREATER "H". ELIMINATE CUTOFF WALL IF ADJACENT CHANNEL IS PAVED AND SKEW IS 20° MAXIMUM.



| REVISION | BY | APPROVED | DATE |
|---|---|---|---|
| ORIGINAL* | KA | J. NAGELVOORT | 01/12 |
| UPDATED | AR | J. NAGELVOORT | 10/15 |
| | | | |
| | | | |
| | | | |

CITY OF SAN DIEGO – STANDARD DRAWING

**BOX CULVERT WINGWALL**

RECOMMENDED BY THE CITY OF SAN DIEGO STANDARDS COMMITTEE

CADungca 10/5/15

COORDINATOR R.C.E. 56523 DATE

DRAWING NUMBER **SDD-111**

REINFORCED CONCRETE WINGWALLS – US

| "H" | 4' | 5' | 6' | 7' | 8' | 9' | 10' | 11' | 12' | 13' | 14' | 15' | 16' |
|---|---|---|---|---|---|---|---|---|---|---|---|---|---|
| W | 3'–2" | 3'–8" | 4'–2" | 4'–8" | 5'–2" | 5'–8" | 6'–2" | 6'–8" | 7'–2" | 7'–8" | 8'–2" | 8'–8" | 9'–2" |
| C | 1'–0" | 1'–2" | 1'–4" | 1'–6" | 1'–8" | 1'–10" | 2'–0" | 2'–2" | 2'–4" | 2'–6" | 2'–8" | 2'–10" | 3'–0" |
| B | 2'–2" | 2'–6" | 2'–10" | 3'–2" | 3'–6" | 3'–10" | 4'–2" | 4'–6" | 4'–10" | 5'–2" | 5'–6" | 5'–10" | 6'–2" |
| F | 1'–2" | | | | | | | | | | | | |
| Batter | None | | | | | | | | 1/2 : 12 | | | | |
| S | 1'–0" | 1'–0" | 1'–0" | 1'–0" | 1'–0" | 1'–0" | 1'–0" | 1'–0" | 1'–0" | 1'–6 1/2" | 1'–7" | 1'–7 1/2" | 1'–8" |
| "c" Bars | #4@24 | #4@18 | #5@20 | #5@14 | #5@10 | #5@7 | #6@7 1/2" | #7@8 | #7@6 | #9@15 | #10@15 | #10@13 | #10@11 |
| "d" Bars | #4@24 | #4@18 | #5@20 | #5@14 | #5@10 | #6@14 | #7@15 | #8@16 | #7@12 | #8@15 | #9@15 | #10@13 | #9@11 |
| Conc $^{CY}/_{lf}$ | 0.32 | 0.38 | 0.44 | 0.49 | 0.55 | 0.61 | 0.67 | 0.73 | 0.79 | 1.02 | 1.10 | 1.18 | 1.26 |
| Reinf $^{\#}/_{lf}$ | 13 | 16 | 19 | 25 | 30 | 37 | 49 | 62 | 76 | 73 | 90 | 104 | 125 |

NOTE: Quantities do not include that portion above the design "H" limit.



| REVISION | BY | APPROVED | DATE |
|---|---|---|---|
| ORIGINAL* | KA | J. NAGELVOORT | 01/12 |
| UPDATED | AR | J. NAGELVOORT | 10/15 |
| | | | |
| | | | |
| | | | |

CITY OF SAN DIEGO – STANDARD DRAWING

**BOX CULVERT WINGWALL**

RECOMMENDED BY THE CITY OF SAN DIEGO STANDARDS COMMITTEE

CADunqca 10/5/15

COORDINATOR R.C.E. 56523 DATE

DRAWING NUMBER **SDD-111**

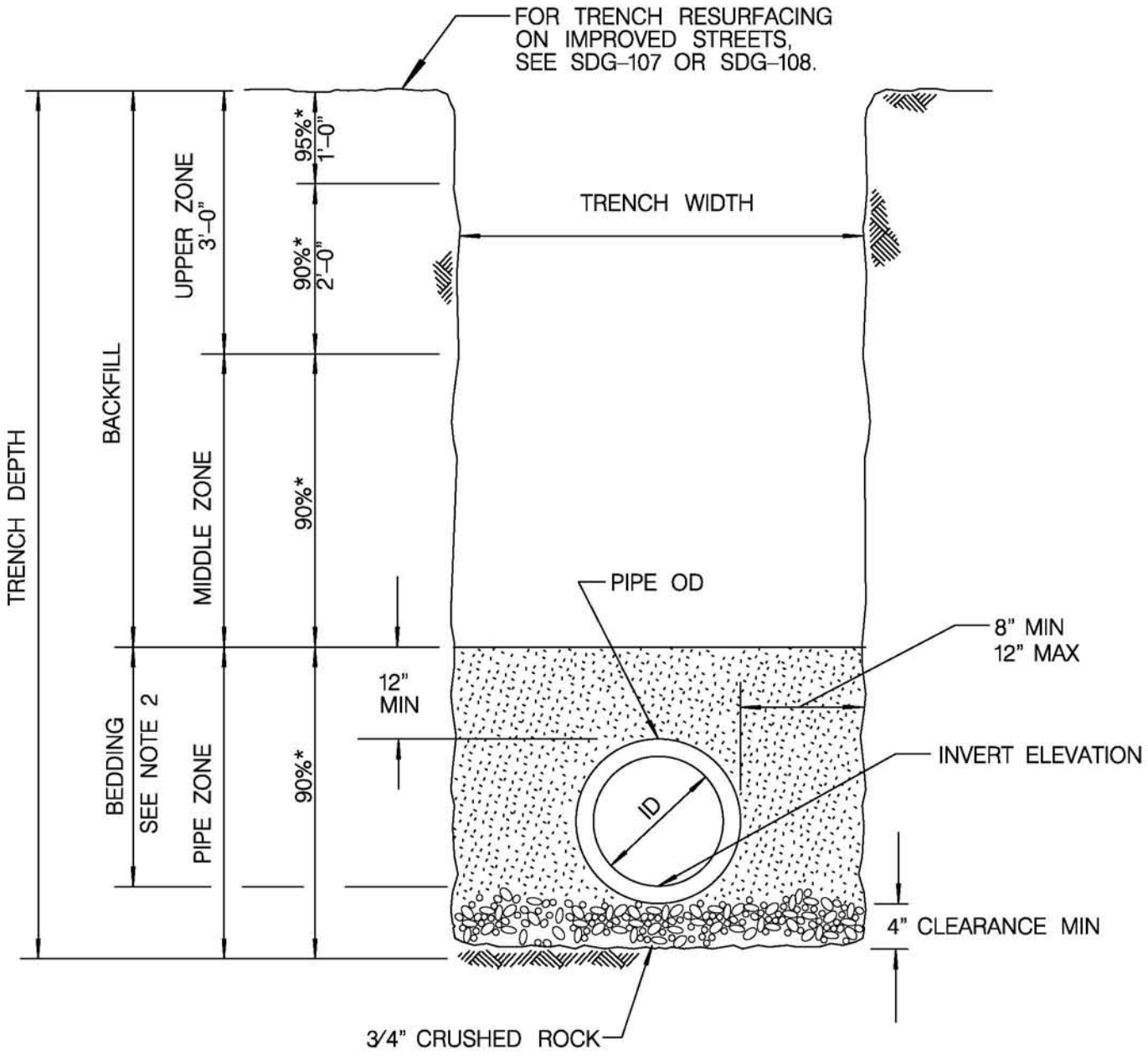


SECTION

NOTES:

1. (*) INDICATES MINIMUM RELATIVE COMPACTION.
2. BEDDING MATERIAL SHALL BE SAND, CRUSHED AGGREGATE, OR NATIVE FREE-DRAINING GRANULAR MATERIAL. 100% SHALL PASS NO. 4 SIEVE AND HAVE A SAND EQUIVALENT OF NOT LESS THAN 30.

| REVISION | BY | APPROVED | DATE |
|---|---|---|---|
| ORIGINAL* | KA | J. NAGELVOORT | 01/12 |

CITY OF SAN DIEGO – STANDARD DRAWING

**PIPE BEDDING AND TRENCH BACKFILL FOR STORM DRAINS**

RECOMMENDED BY THE CITY OF SAN DIEGO STANDARDS COMMITTEE

COORDINATOR R.C.E. 65271 DATE 1/31/2012

DRAWING NUMBER **SDD-110**

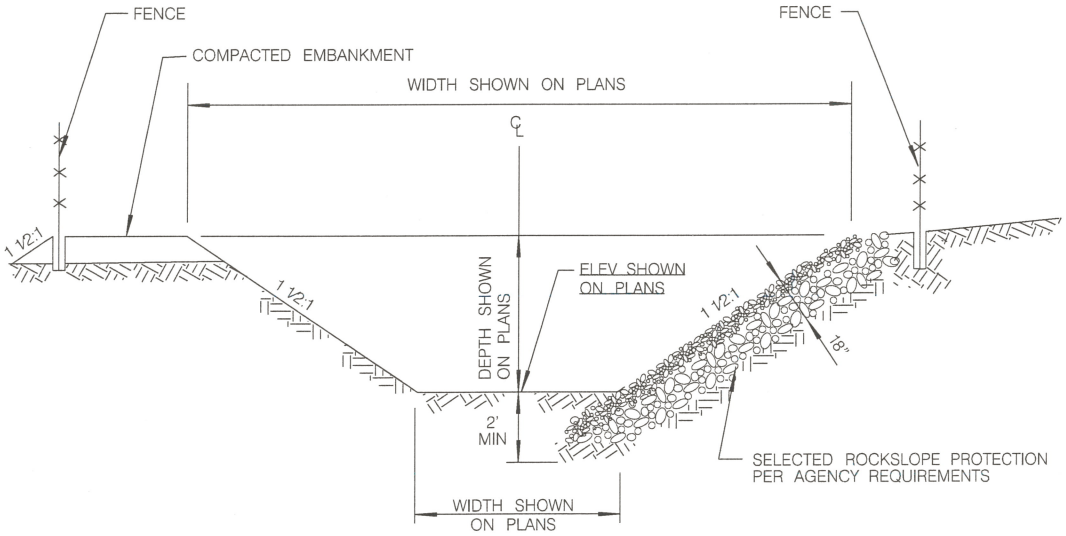


## SECTION

NOTES:

1. THE FOLLOWING SHALL BE AS REQUIRED:

   A. LOW FLOW CHANNEL

   B. FILTER BLANKET

   C. CUTOFF WALL

   D. FENCE

2. CHANNELING FENCING IS REQUIRED PER DRAWING SDM–112 OR SDM–114. UNLESS OTHERWISE SHOWN ON THE PLANS, A CHAIN LINK FENCE 6' HEIGHT, WITH A TOP RAIL SET AT 6" INSIDE EASEMENT BOUNDARY LINES SHALL BE CONSTRUCTED ON BOTH SIDES, INCLUDING BOX CULVERTS OR ANY OTHER STRUCTURE AT THE END OF THE CHANNEL. ACCESS POINTS SHALL BE PROVIDED ON BOTH SIDES AT 500' MAXIMUM INTERVALS. TWO 10' GATES OR ONE 20' GATE FOR VEHICULAR ACCESS ARE REQUIRED AT A MAXIMUM OF 1000' INTERVALS AND MAY BE PLACED ON EITHER SIDE. THE REMAINING ACCESS POINTS SHALL BE 4' GATES.

LEGEND ON PLANS

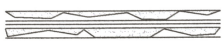

| REVISION | BY | APPROVED | DATE |
|---|---|---|---|
| ORIGINAL* | KA | J. NAGELVOORT | 01/12 |
| UPDATED | RB | J. NAGELVOORT | 10/15 |
| | | | |
| | | | |
| | | | |

CITY OF SAN DIEGO – STANDARD DRAWING

**GRADED EARTH CHANNEL**

RECOMMENDED BY THE CITY OF SAN DIEGO STANDARDS COMMITTEE

CAHungca 10/5/15

COORDINATOR R.C.E. 56523 DATE

DRAWING NUMBER **SDD-109**

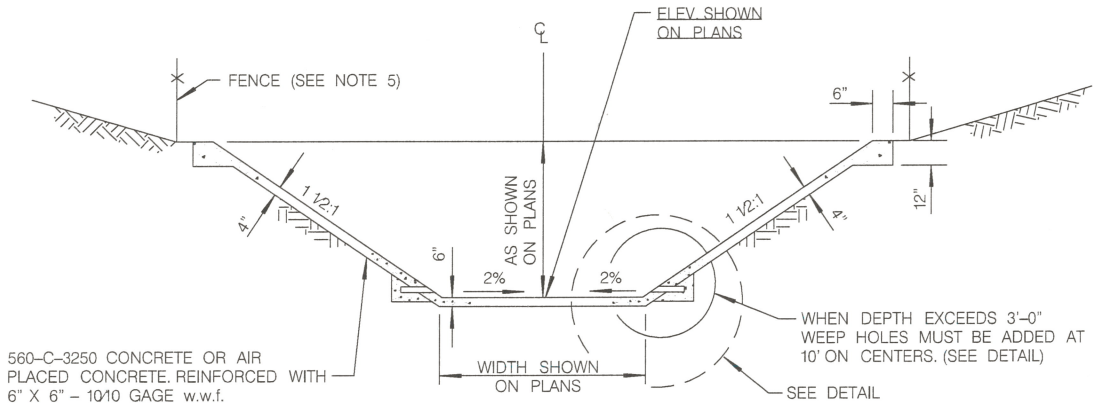


TYPICAL SECTION

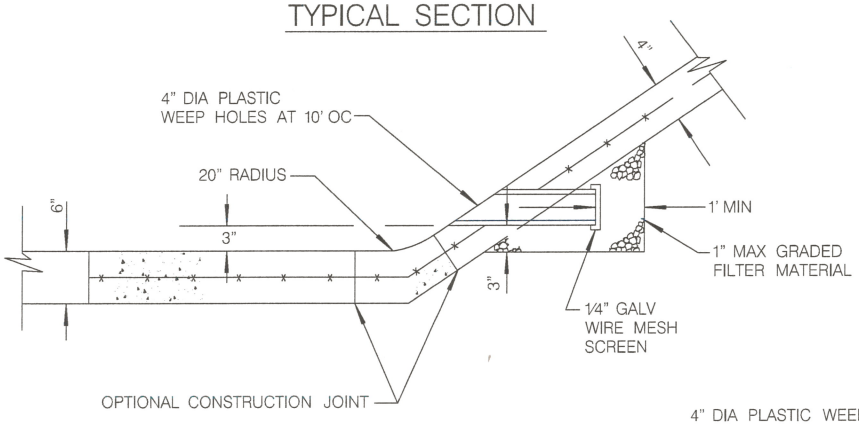


DETAIL

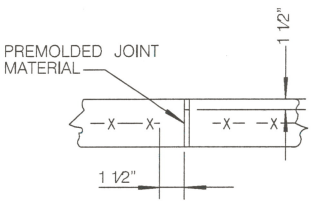


EXPANSION JOINT

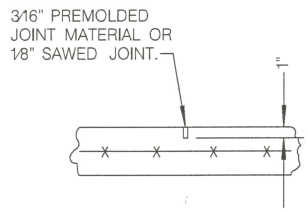


WEAKENED PLANE JOINT

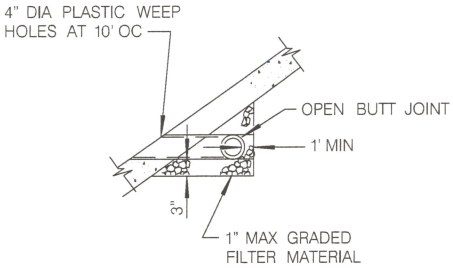


ALTERNATE CONTINUOUS DRAIN

NOTES:

1. CLAY PIPE MAY BE SUBSTITUTED FOR PLASTIC PIPE AT WEEP HOLES.
2. WEAKENED PLANE JOINTS SHALL BE PLACED EVERY 12' TO 15'. EXPANSION JOINTS SHALL BE PLACED AT ALL CHANGES OF SECTION AND AT ENDS OF CURVES.
3. CUTOFF WALLS SHALL BE CONSTRUCTED AT EACH END OF THE CHANNEL ALONG THE FULL WIDTH OF SECTION.
4. REINFORCEMENT SHOWN IS MINIMUM.
5. CHANNELING FENCING IS REQUIRED PER SDM-112 OR SDM-114. UNLESS OTHERWISE SHOWN ON THE PLANS, A CHAIN LINK FENCE 6' IN HEIGHT, WITH A TOP RAIL SET AT 6" INSIDE EASEMENT BOUNDARY LINES SHALL BE CONSTRUCTED ON BOTH SIDES, INCLUDING BOX CULVERTS OR ANY OTHER STRUCTURE AT THE END OF THE CHANNEL. ACCESS POINTS SHALL BE PROVIDED ON BOTH SIDES AT 500' MAXIMUM INTERVALS. TWO 10' GATES OR ONE 20' GATE FOR VEHICULAR ACCESS ARE REQUIRED AT A MAXIMUM OF 1000' INTERVALS AND MAY BE PLACED ON EITHER SIDE. THE REMAINING ACCESS POINTS SHALL BE 4' GATES.

LEGEND ON PLANS

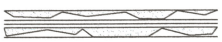

| REVISION | BY | APPROVED | DATE |
|---|---|---|---|
| ORIGINAL* | KA | J. NAGELVOORT | 01/12 |
| UPDATED | RB | J. NAGELVOORT | 10/15 |
| | | | |
| | | | |
| | | | |

CITY OF SAN DIEGO - STANDARD DRAWING

**MAJOR DRAINAGE CHANNEL**

RECOMMENDED BY THE CITY OF SAN DIEGO STANDARDS COMMITTEE

CADungca 10/5/15

COORDINATOR R.C.E. 56523 DATE

DRAWING NUMBER **SDD-108**

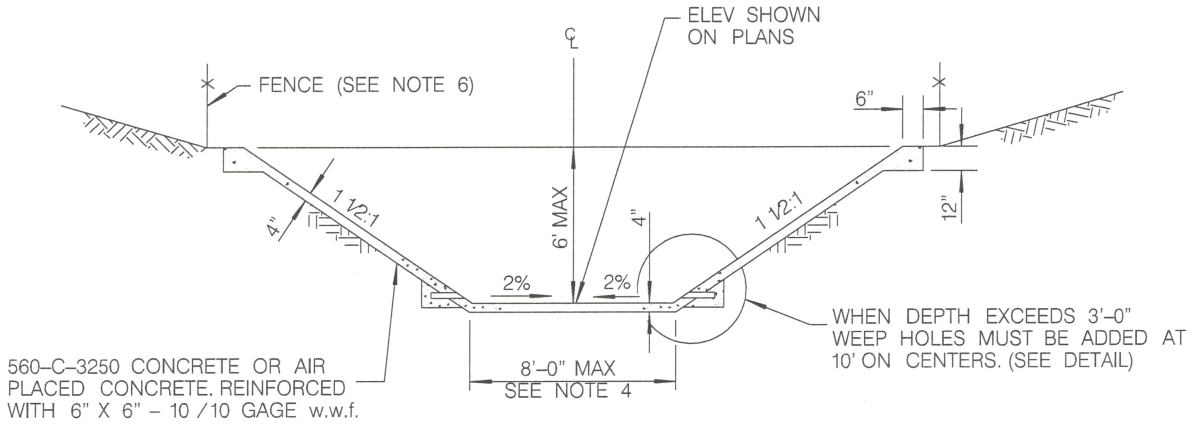


TYPICAL SECTION

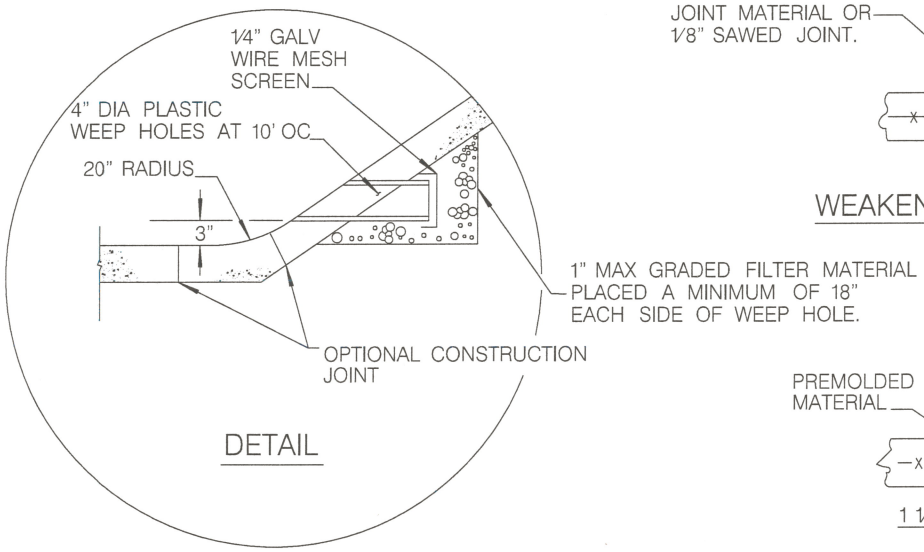


DETAIL

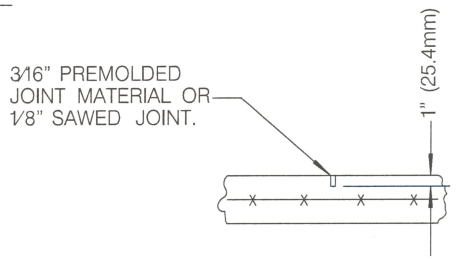


WEAKENED PLANE JOINT

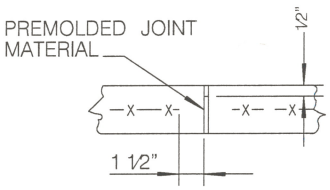


EXPANSION JOINT

NOTES:

1. CLAY PIPE MAY BE SUBSTITUTED FOR PLASTIC PIPE AT WEEP HOLES.
2. WEAKENED PLANE JOINTS SHALL BE PLACED EVERY 12' TO 15'. EXPANSION JOINTS SHALL BE PLACED AT ALL CHANGES OF SECTION AND AT ENDS OF CURVES.
3. CUTOFF WALLS SHALL BE CONSTRUCTED AT EACH END OF THE CHANNEL ALONG THE FULL WIDTH OF SECTION. SEE D-72.
4. FOR BOTTOM WIDTHS GREATER THAN 8' SEE SDD-108.
5. REINFORCEMENT SHOWN IS MINIMUM.
6. CHANNELING FENCING IS REQUIRED. UNLESS OTHERWISE SHOWN ON THE PLANS A CHAIN LINK FENCE (PER SDM-112 AND SDM-114) 6' IN HEIGHT, WITH A TOP RAIL SET AT 6" INSIDE EASEMENT BOUNDARY LINES SHALL BE CONSTRUCTED ON BOTH SIDES, INCLUDING BOX CULVERTS OR ANY OTHER STRUCTURE AT THE END OF THE CHANNEL. ACCESS POINTS SHALL BE PROVIDED ON BOTH SIDES AT 500' MAXIMUM INTERVALS. TWO 10' GATES OR ONE 20' GATE FOR VEHICULAR ACCESS ARE REQUIRED AT A MAXIMUM OF 1000' INTERVALS AND MAY BE PLACED ON EITHER SIDE. THE REMAINING ACCESS POINTS SHALL BE 4' GATES.

LEGEND ON PLANS

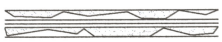

| REVISION | BY | APPROVED | DATE |
|---|---|---|---|
| ORIGINAL* | KA | J. NAGELVOORT | 01/12 |
| UPDATED | RB | J. NAGELVOORT | 10/15 |
| | | | |
| | | | |
| | | | |

CITY OF SAN DIEGO - STANDARD DRAWING

**MINOR DRAINAGE CHANNEL**

RECOMMENDED BY THE CITY OF SAN DIEGO STANDARDS COMMITTEE

CADrnqea 10/5/15

COORDINATOR R.C.E. 56523 DATE

DRAWING NUMBER **SDD-107**

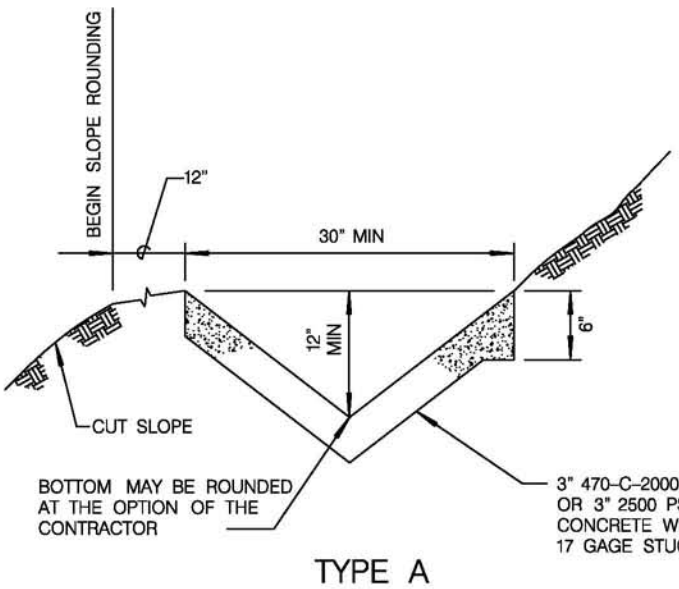


TYPE A

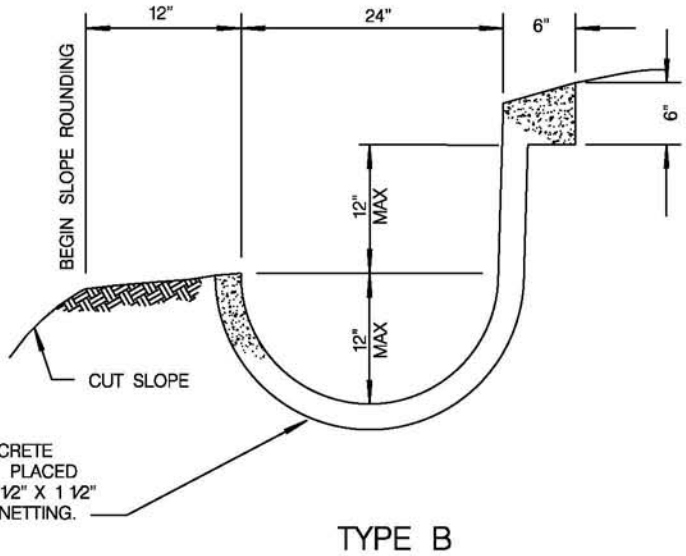


TYPE B

## BROW DITCH

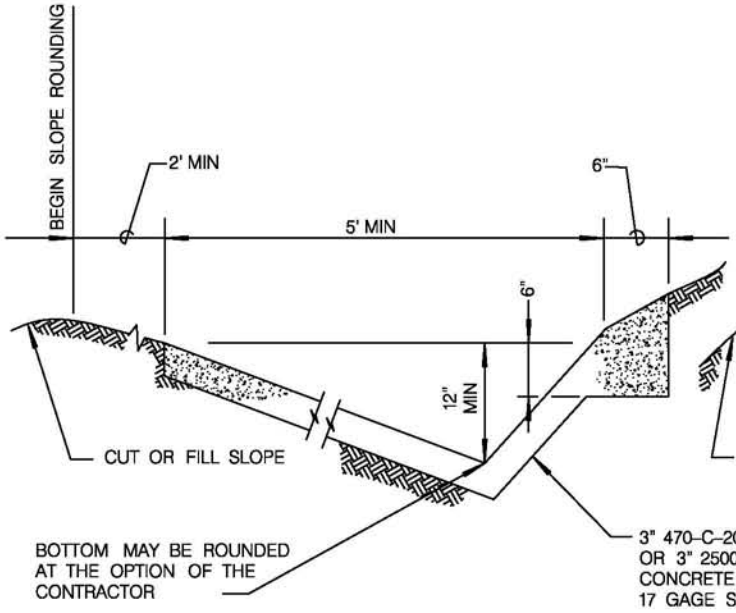


TYPE C

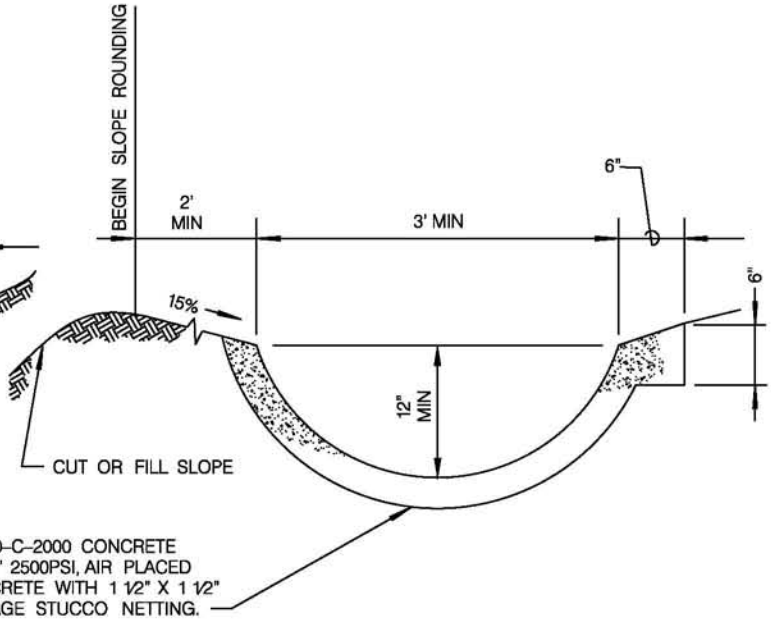


TYPE D

## TERRACE DITCH

NOTES:

1. LONGITUDINAL SLOPE OF LINED DITCH SHALL BE 2% MINIMUM.
2. OVER SLOPE DOWN DITCHES SHALL EMPLOY 6" THICKENED EDGE SECTION AT BOTH SIDES OF DITCH.
3. STUCCO NETTING SHALL BE GALVANIZED AND SHALL HAVE 1 1/2" COVER.

LEGEND ON PLANS

| REVISION | BY | APPROVED | DATE |
|---|---|---|---|
| ORIGINAL* | KA | J. NAGELVOORT | 01/12 |

CITY OF SAN DIEGO – STANDARD DRAWING

**DRAINAGE DITCHES**

RECOMMENDED BY THE CITY OF SAN DIEGO STANDARDS COMMITTEE

COORDINATOR R.C.E. 65271 DATE 1/31/2012

DRAWING NUMBER **SDD-106**

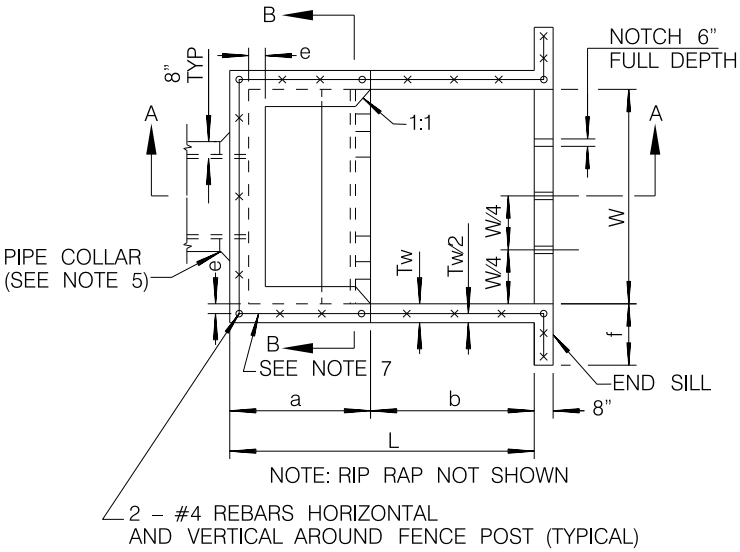


PLAN

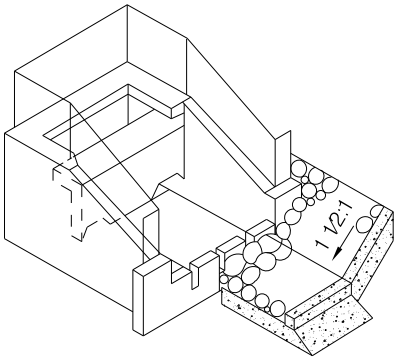


PICTORIAL VIEW

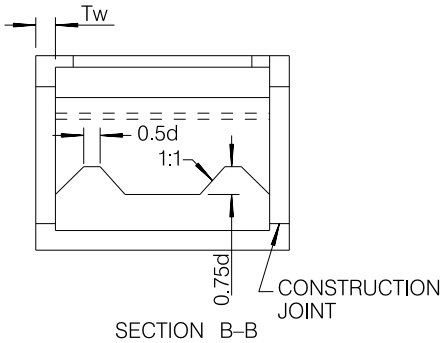


SECTION B–B

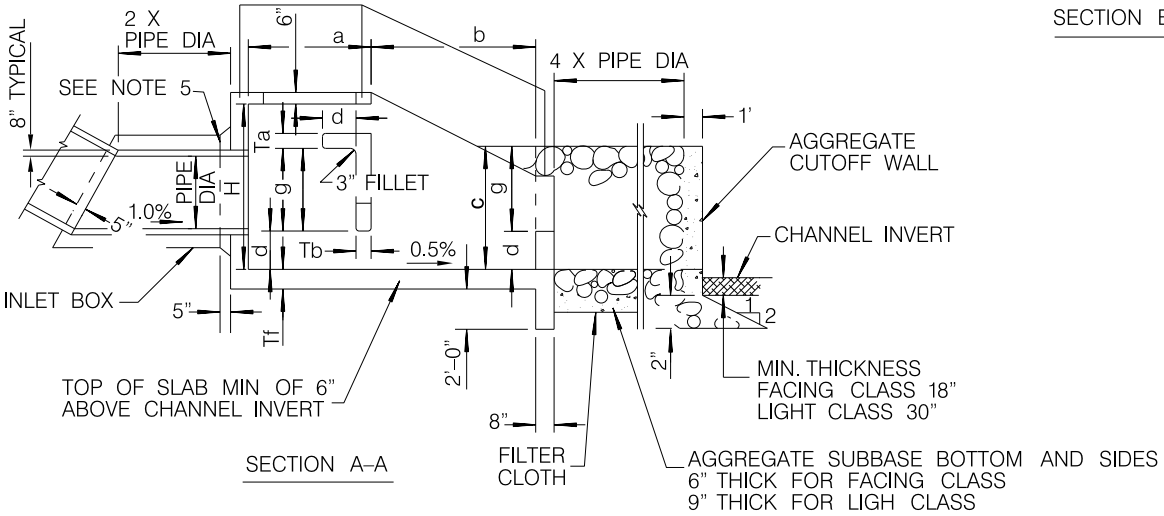


SECTION A–A

SEE TABLE ON SHEET 2 FOR DIMENSIONS
SEE NOTES ON SHEET 2

SHEET 1 OF 2

| REVISION | BY | APPROVED | DATE |
|---|---|---|---|
| ORIGINAL* | KA | J. NAGELVOORT | 01/12 |
| UPDATED | BD | J. NAGELVOORT | 08/15 |
| UPDATED | AB | J. NAGELVOORT | 10/15 |
| | | | |
| | | | |

CITY OF SAN DIEGO – STANDARD DRAWING

**CONCRETE ENERGY DISSIPATOR**

RECOMMENDED BY THE CITY OF SAN DIEGO STANDARDS COMMITTEE

COORDINATOR R.C.E. 56523 DATE

DRAWING NUMBER **SDD-105**

CONCRETE ENERGY DISSIPATOR DIMENSIONS

| Pipe Dia (in) | 18 | 24 | 30 | 36 | 42 | 48 | 54 | 60 | 72 |
|---|---|---|---|---|---|---|---|---|---|
| Area (sq ft) | 1.77 | 3.14 | 4.91 | 7.07 | 9.62 | 12.57 | 15.90 | 19.63 | 28.27 |
| Max Q (cfs) | 21 | 38 | 59 | 85 | 115 | 151 | 191 | 236 | 339 |
| W | 5'–6" | 6'–9" | 8'–0" | 9'–3" | 10'–6" | 11'–9" | 13'–0" | 14'–3" | 16'–6" |
| H | 4'–3" | 5'–3" | 6'–3" | 7'–3" | 8'–0" | 9'–0" | 9'–9" | 10'–9" | 12'–3" |
| L | 7'–4" | 9'–0" | 10'–8" | 12'–4" | 14'–0" | 15'–8" | 17'–4" | 19'–0" | 22'–0" |
| a | 3'–3" | 3'–11" | 4'–7" | 5'–3" | 6'–0" | 6'–9" | 7'–4" | 8'–0" | 9'–3" |
| b | 4'–1" | 5'–1" | 6'–1" | 7'–1" | 8'–0" | 8'–11" | 10'–0" | 11'–0" | 12'–9" |
| c | 2'–4" | 2'–10" | 3"–4" | 3'–10" | 4'–5" | 4'–11" | 5'–5" | 5'–11" | 6'–11" |
| d | 0'–11" | 1'–2" | 1'–4" | 1'–7" | 1'–9" | 2'–0" | 2'–2" | 2'–5" | 2'–9" |
| e | 0'–6" | 0'–6" | 0'–8" | 0'–8" | 0'–10" | 0'–10" | 1'–0" | 1'–0" | 1'–3" |
| f | 1'–6" | 2'–0" | 2'–6" | 3'–0" | 3'–0" | 3'–0" | 3'–0" | 3'–0" | 3'–0" |
| g | 2'–1" | 2'–6" | 3'–0" | 3'–6" | 3'–11" | 4'–5" | 4'–11" | 5'–4" | 6'–2" |
| Tf | 8" | | | 10" | | 12" | | | |
| Tb | 7" | | | 9 1/2" | | 10 1/2" | | | |
| Tw | 7" | | | 9 1/2" | | 10 1/2" | | | |
| Ta | 7" | | | 8" | | | | | |

NOTES:

1. DESIGN EQUIVALENT FLUID PRESSURE (EARTH LOADING) = 60 pcf MAXIMUM OUTLET VELOCITY = 35 ft/s
2. CONCRETE SHALL BE 560–C–3250
3. REINFORCING SHALL CONFORM TO ASTM DESIGNATION A615 AND MAY BE GRADE 40 OR 60. REINFORCING SHALL BE PLACED WITH 2" CLEAR CONCRETE COVER UNLESS NOTED OTHERWISE. SPLICES SHALL NOT BE PERMITTED EXCEPT AS INDICATED ON THE PLANS.
4. FOR PIPE GRADES NOT EXCEEDING 20%, INLET BOX MAY BE OMITTED.
5. IF INLET BOX IS OMITTED, CONSTRUCT PIPE COLLAR AS SHOWN.
6. UNLESS NOTED OTHERWISE, ALL REINFORCING BAR BENDS SHALL BE FABRICATED WITH STANDARD HOOKS. FOR STRUCTURAL DETAILS, SEE D–42 FOR PIPELINE SIZES FROM 18" TO 30" AND SEE D–43 FOR PIPELINE SIZES FROM 36" TO 72".
7. 5' HIGH CHAIN LINK FENCING, EMBED POST 18" DEEP IN WALLS AND ENCASE WITH CLASS B MORTAR.
8. IN SANDY AND SILTY SOIL:

   A) RIP RAP AND AGGREGATE BASE CUTOFF WALL REQUIRED AT THE END OF ROCK APRON.

   B) FILTER CLOTH (POLYFILTER X OR EQUIVALENT) SHALL BE INSTALLED ON NATIVE SOIL BASE, MINIMUM OF 1' OVERLAPS AT JOINTS
9. RIP RAP AND SUBBASE CLASSIFICATION SHALL BE AS SHOWN ON PLANS.
10. FOR RIP RAP SELECTION SEE TABLE 200–1.7 OF THE WHITEBOOK.



| REVISION | BY | APPROVED | DATE |
|---|---|---|---|
| ORIGINAL* | KA | J. NAGELVOORT | 01/12 |
| UPDATED | BD | J. NAGELVOORT | 08/15 |
| UPDATED | AB | J. NAGELVOORT | 10/15 |
| | | | |
| | | | |

CITY OF SAN DIEGO – STANDARD DRAWING

**CONCRETE ENERGY DISSIPATOR**

RECOMMENDED BY THE CITY OF SAN DIEGO STANDARDS COMMITTEE

COORDINATOR R.C.E. 56523 DATE

DRAWING NUMBER **SDD-105**

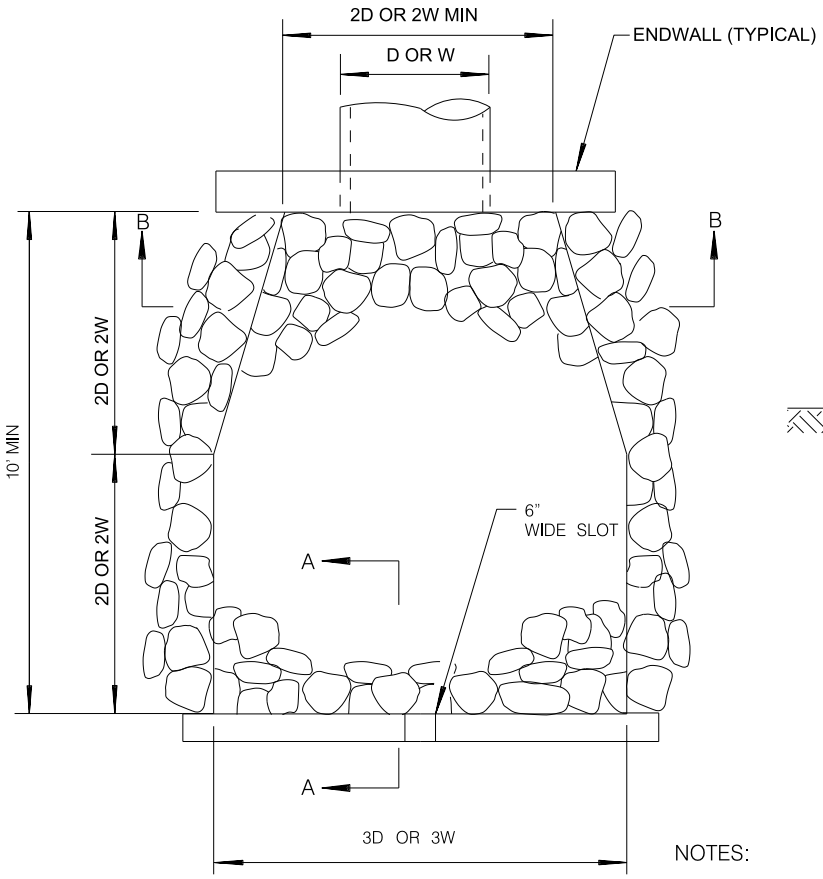


PLAN

D = PIPE DIAMETER

W = BOTTOM WIDTH OF CHANNEL

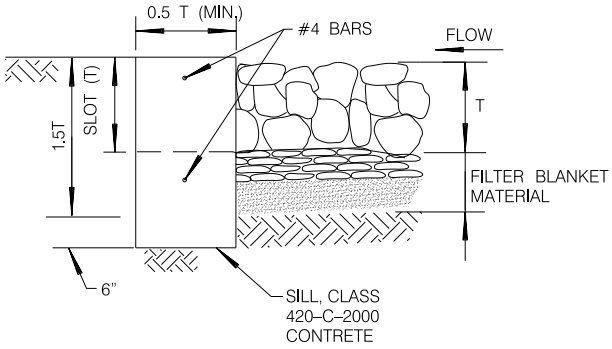


SECTION A–A

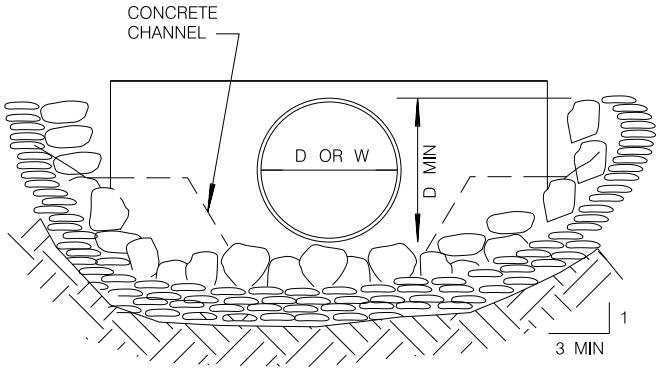


SECTION B–B

NOTES:

1. PLANS SHALL SPECIFY:

   A) ROCK CLASS AND THICKNESS (T).

   B) FILTER BLANKET MATERIAL, NUMBER OF LAYERS AND THICKNESS

2. RIP RAP SHALL BE EITHER QUARRY STONE OR BROKEN CONCRETE (IF SHOWN ON THE PLANS). COBBLES ARE NOT ACCEPTABLE.

3. RIP RAP SHALL BE PLACED OVER A GEOTEXTILE FILTER FABRIC. FILTER BLANKET MATERIAL SHALL BE PLACED UNDER THE FABRIC WHEN SPECIFIED.

4. SEE CITY SUPPLEMENT FOR SELECTION OF FILTER MATERIAL.

5. RIP RAP ENERGY DISSIPATERS SHALL BE DESIGNATED AS EITHER TYPE 1 OR TYPE 2. TYPE 1 SHALL BE WITH CONCRETE SILL; TYPE 2 SHALL BE WITHOUT SILL.

6. FOR STRUCTURAL DETAILS, SEE D–42 FOR PIPELINE SIZES FROM 18" TO 30" AND SEE D–43 FOR PIPELINE SIZES FROM 36" TO 72".

7. FOR RIP RAP SELECTION SEE TABLE 200–1.7 OF THE WHITEBOOK.

| REVISION | BY | APPROVED | DATE |
|---|---|---|---|
| ORIGINAL* | KA | J. NAGELVOORT | 01/12 |
| UPDATED | AB | J. NAGELVOORT | 10/15 |
| | | | |
| | | | |
| | | | |

CITY OF SAN DIEGO – STANDARD DRAWING

**RIP RAP**

**ENERGY DISSIPATOR**

RECOMMENDED BY THE CITY OF SAN DIEGO STANDARDS COMMITTEE

COORDINATOR R.C.E. 56523 DATE

DRAWING NUMBER **SDD-104**

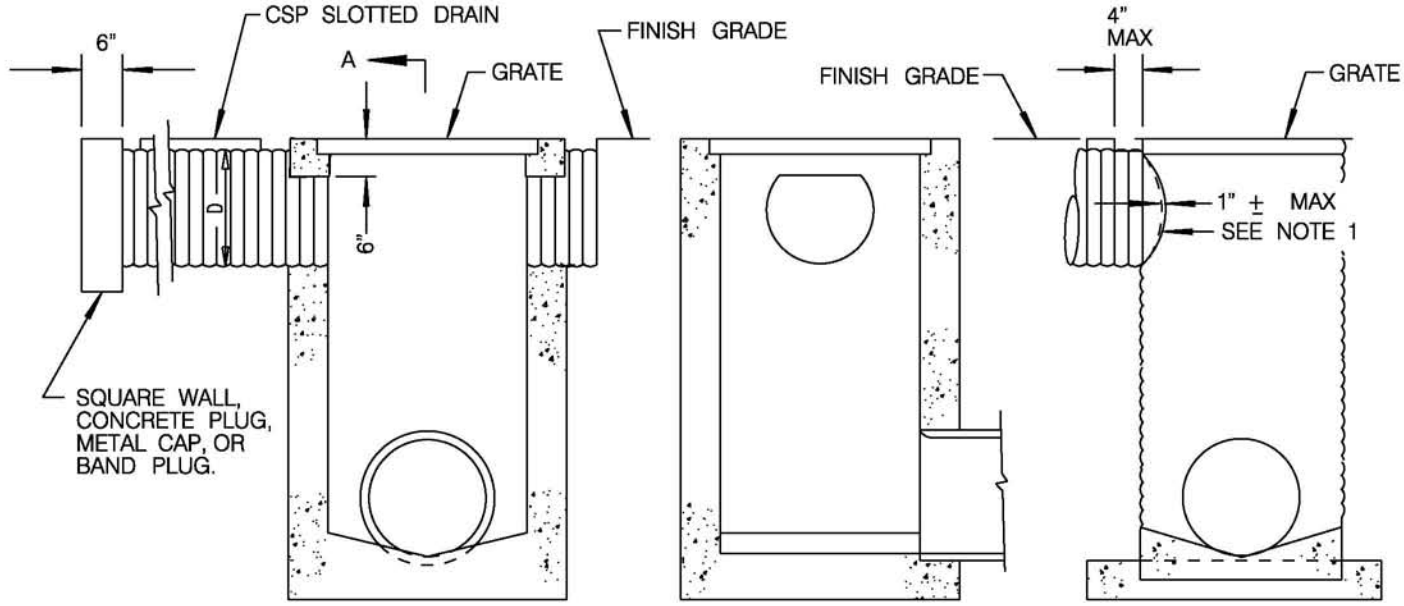


CATCH BASIN

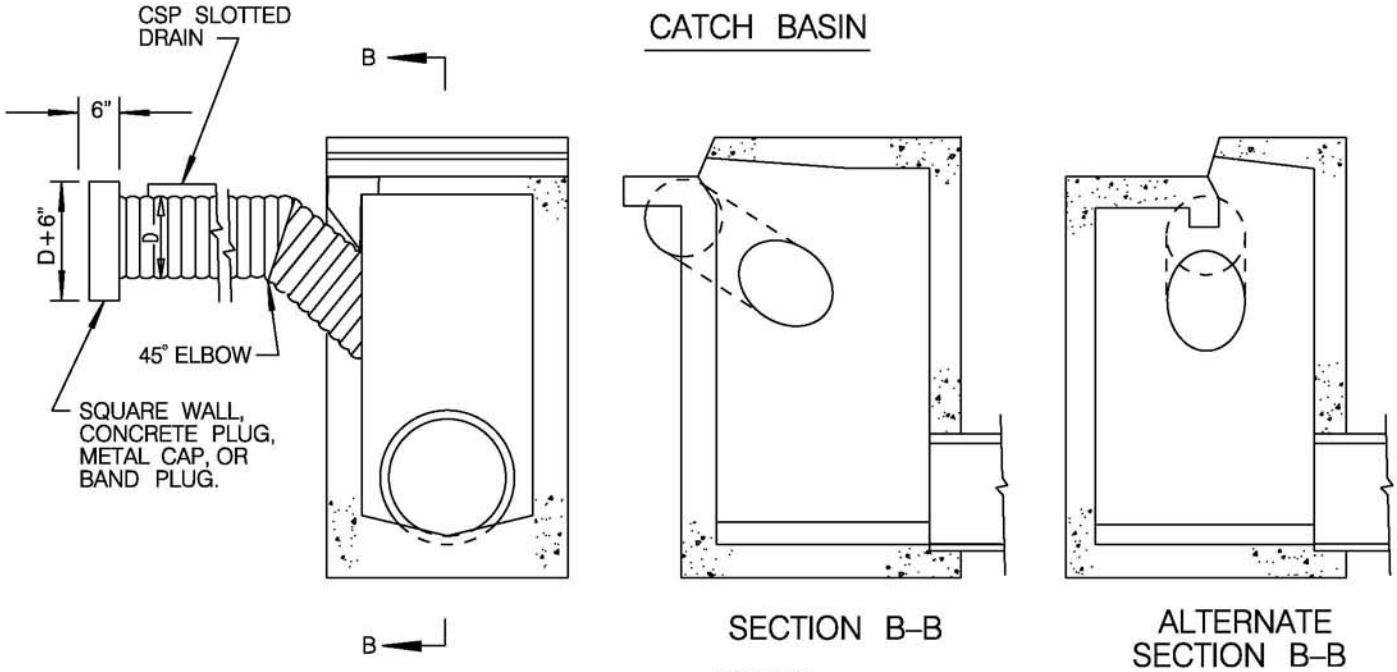


INLETS

NOTES:

1. EITHER FIELD JOINT WITH A PLIABLE MIXTURE OF SAND, PORTLAND CEMENT EMULSIFIED ASPHALT (MIXTURE OF 1 PART PORTLAND CEMENT, 3–5 PARTS SAND, AND 1 1/2 PARTS SSI EMULSIFIED ASPHALT) OR CONTINOUS WELD.
2. SLOTTED DRAIN INSTALLATIONS SHALL BE ENCASED WITH 6 INCH PCC 520–C–2500 ALL AROUND AND SHALL BE POURED MONOLITHICALLY WITH THE CURB AND GUTTER.

| REVISION | BY | APPROVED | DATE |
|---|---|---|---|
| ORIGINAL* | KA | J. NAGELVOORT | 01/12 |

CITY OF SAN DIEGO – STANDARD DRAWING

**SLOTTED DRAIN CONNECTIONS TO STANDARD INLETS**

RECOMMENDED BY THE CITY OF SAN DIEGO STANDARDS COMMITTEE

COORDINATOR R.C.E. 65271 DATE 1/31/2012

DRAWING NUMBER **SDD-103**

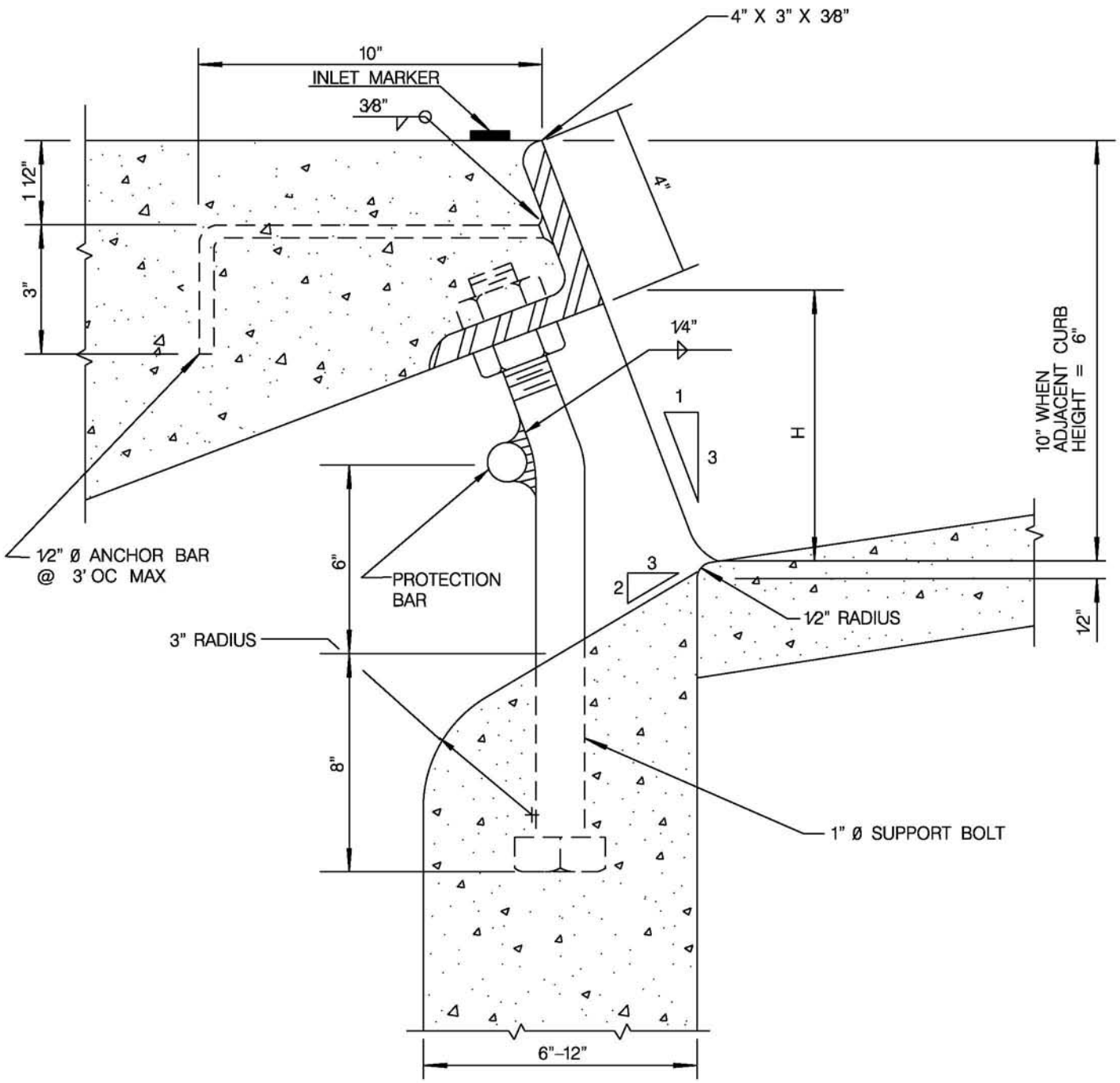


NOTES:

1. FACE ANGLE SHALL BE CAST INTO STRUCTURE CONTINUOUS FOR THE FULL LENGHT "L".
2. EXPOSED METAL PARTS SHALL BE HOT-DIPPED GALVANIZED AFTER FABRICATION.
3. WHEN CURB INLET OPENING HEIGHT (H) EXCEEDS 8" INSTALL 1" Ø STEEL PROTECTION BAR.
4. INSTALL ADDITIONAL BARS AT 3 1/2" CLEAR SPACING ABOVE FIRST BAR WHEN OPENING EXCEEDS 16".
5. WHEN CURB INLET OPENING LENGTH EXCEEDS 8' INSTALL 1" Ø STEEL SUPPORT BOLTS, SPACED AT NOT MORE THAN 5' OC.

| REVISION | BY | APPROVED | DATE |
|---|---|---|---|
| ORIGINAL* | KA | J. NAGELVOORT | 01/12 |

CITY OF SAN DIEGO – STANDARD DRAWING

RECOMMENDED BY THE CITY OF SAN DIEGO STANDARDS COMMITTEE

COORDINATOR R.C.E. 65271 DATE 1/31/2012

# CURB INLET OPENING

DRAWING NUMBER **SDD-102**

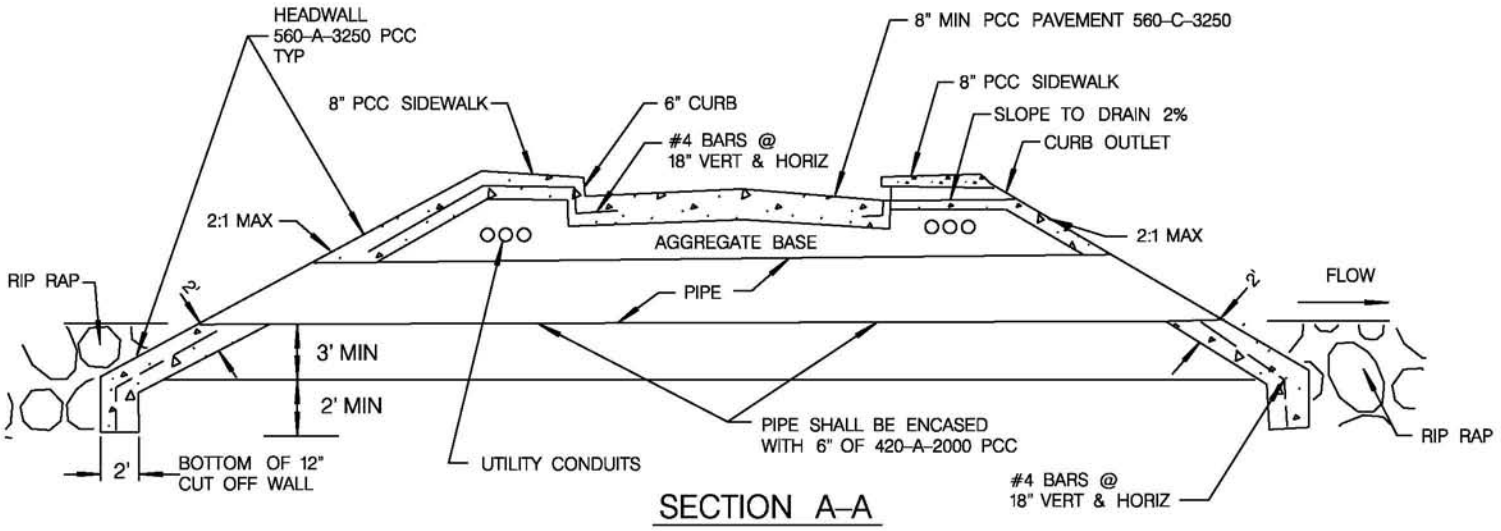


SECTION A–A

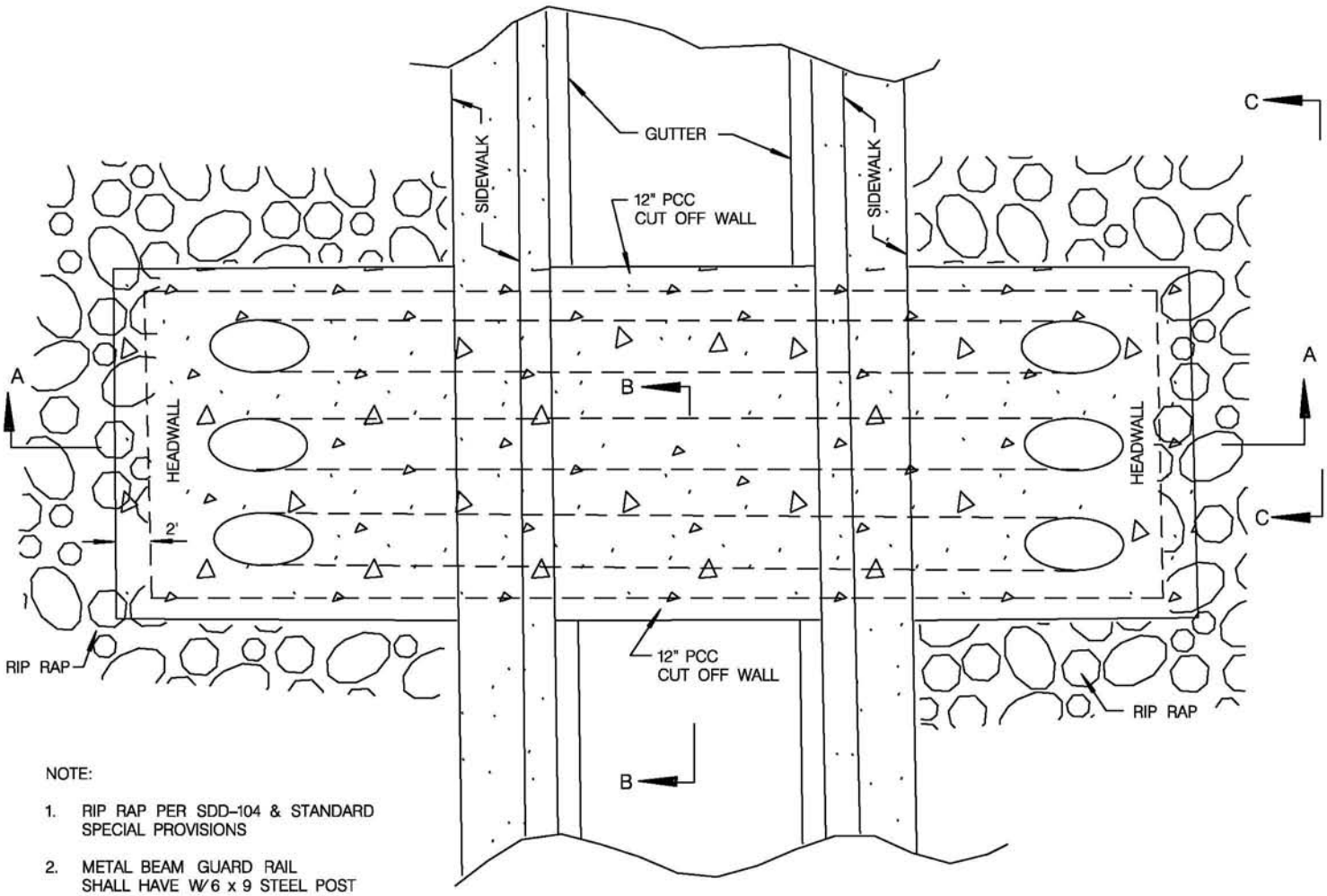


PLAN

NOTE:

1. RIP RAP PER SDD–104 & STANDARD SPECIAL PROVISIONS
2. METAL BEAM GUARD RAIL SHALL HAVE W6 x 9 STEEL POST
3. SIDEWALK, CURB, PAVEMENT AND HEADWALL'S SHALL BE TIED WITH #4 BARS 18" OC HORIZONTAL AND VERTICAL
4. CONCRETE JOINTS PER SDG–109 AND G–10

SHEET 1 OF 2

| REVISION | BY | APPROVED | DATE |
|---|---|---|---|
| ORIGINAL | | J. CASEY | 06/83 |
| UPDATED | KA | J. NAGELVOORT | 01/12 |
| | | | |
| | | | |
| | | | |

CITY OF SAN DIEGO – STANDARD DRAWING

**TYPICAL FORD**

RECOMMENDED BY THE CITY OF SAN DIEGO STANDARDS COMMITTEE

H. Haali 1/31/2012

COORDINATOR R.C.E. 65271 DATE

DRAWING NUMBER **SDD-101**

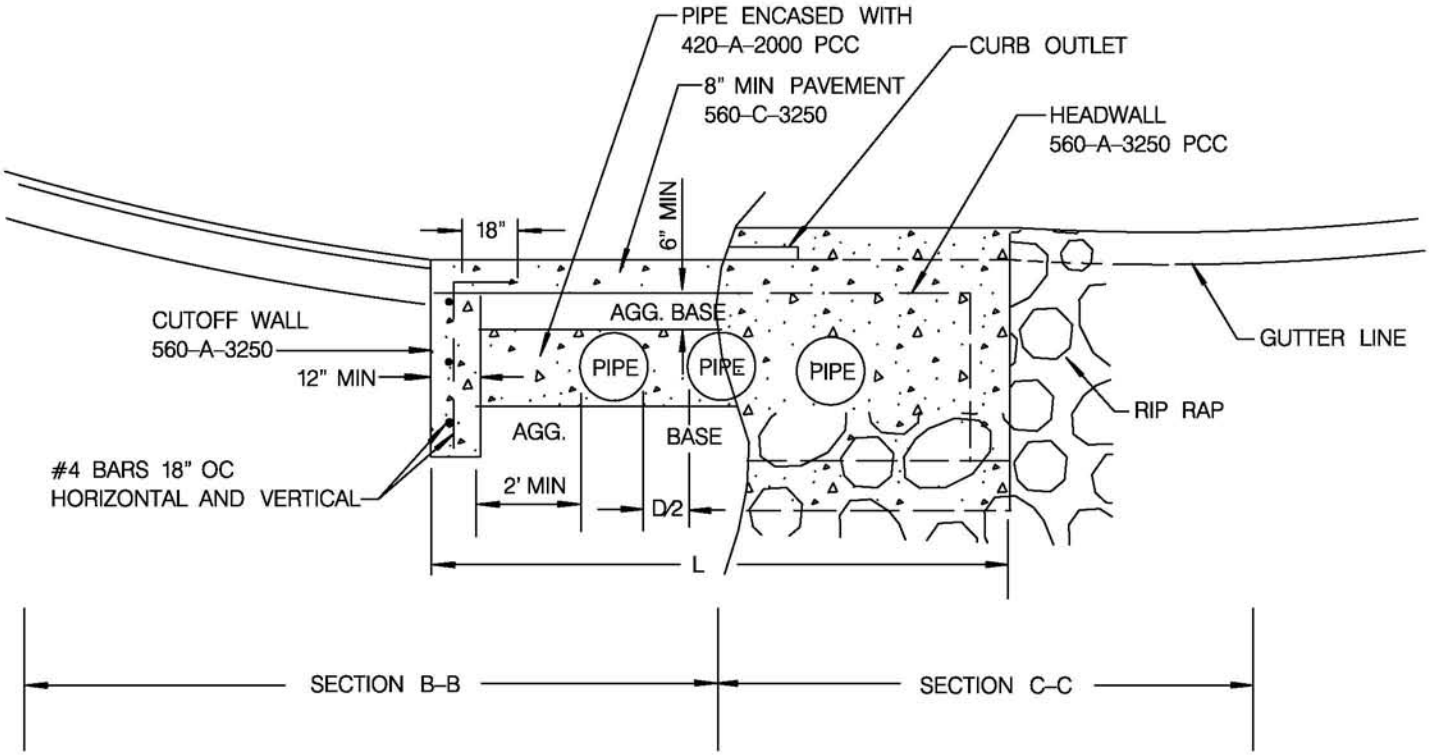


NOTE:

1. HEADWALL LENGTH (L) PER D–30, D–31

SHEET 2 OF 2

| REVISION | BY | APPROVED | DATE |
|---|---|---|---|
| ORIGINAL | | J. CASEY | 06/83 |
| UPDATED | KA | J. NAGELVOORT | 01/12 |
| | | | |
| | | | |
| | | | |

CITY OF SAN DIEGO – STANDARD DRAWING

**TYPICAL FORD**

RECOMMENDED BY THE CITY OF SAN DIEGO STANDARDS COMMITTEE

H. Haali 1/31/2012

COORDINATOR R.C.E. 65271 DATE

DRAWING NUMBER **SDD-101**

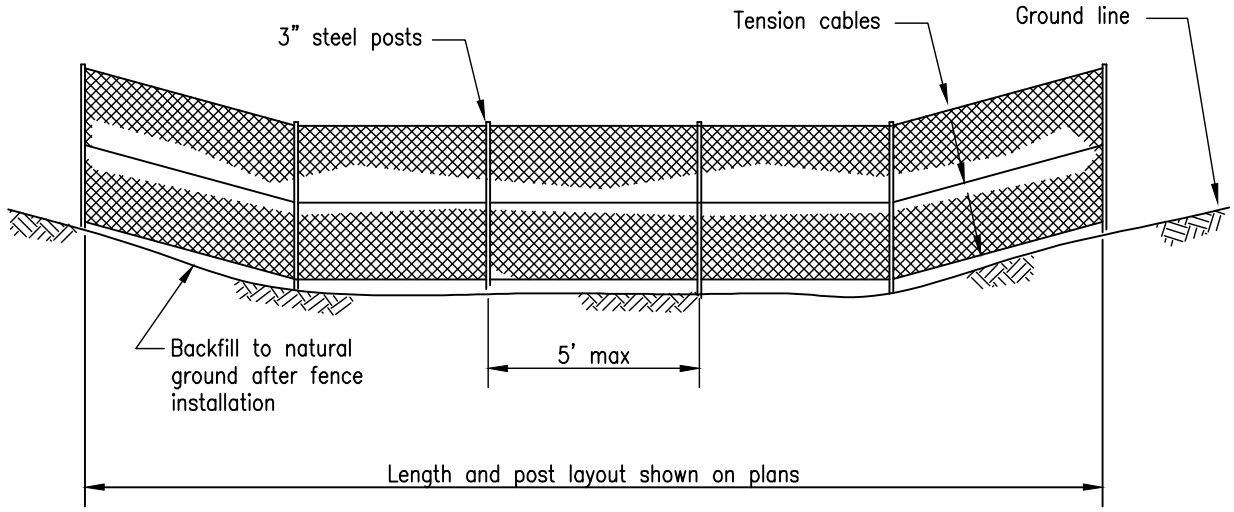


ELEVATION

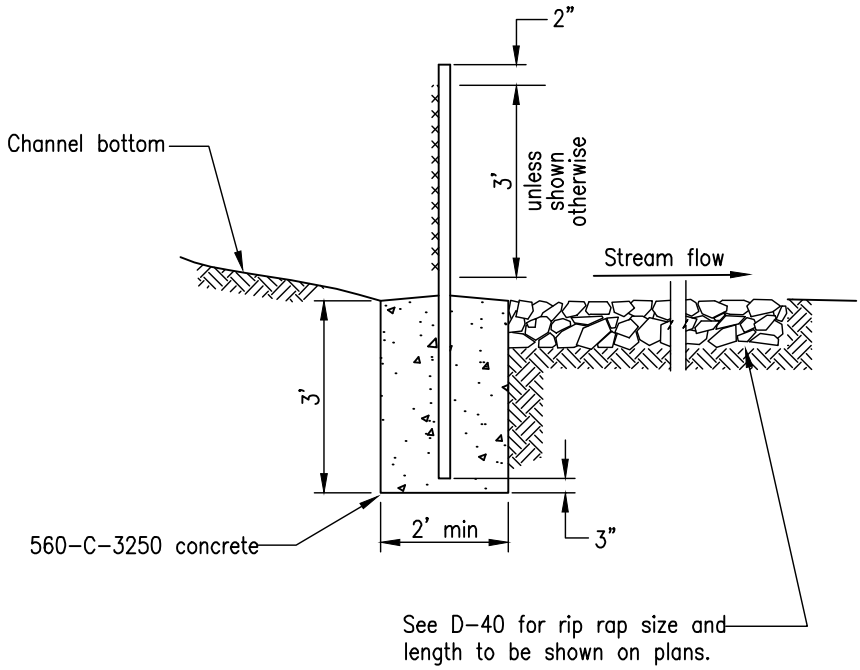


SECTION

## NOTES

1. Fence fabric shall be 2" mesh, 9 gage galvanized steel wire, placed on the upstream side of the posts and tension cables.
2. Tension cable shall be 5/16" dia. steel at 18" OC, secured at ends with cable clamps. Secure fence to cable with 12 gage galvanized steel wire looped at 6" OC.
3. Posts shall be 3" steel pipe, 5.79 lb/ft. Fill with mortar after placing.
4. Fence fabric shall be secured to posts with 9 gage wire clips at 9" OC.

LEGEND ON PLANS

| Revision | By | Approved | Date |
|---|---|---|---|
| ORIGINAL | | H. Hecht | 10/82 |
| Add Metric | | T. Stanton | 03/03 |
| Reviewed | | T. Stanton | 04/06 |
| Edited | S.S. | T. Regello | 03/11 |
| | | | |

SAN DIEGO REGIONAL STANDARD DRAWING

# DEBRIS FENCE

RECOMMENDED BY THE SAN DIEGO REGIONAL STANDARDS COMMITTEE

7/26/2012

Chairperson R.C.E. 19246 Date

DRAWING NUMBER **D-82**

FOR DRAWING D-40, SEE DRAWING SDD-104

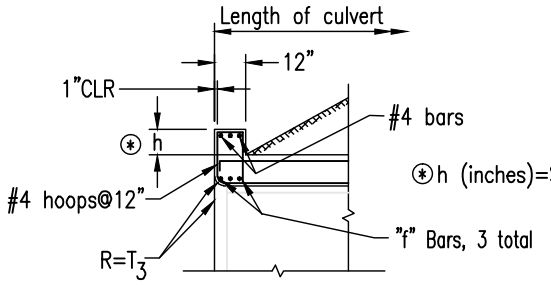


PART SECTION

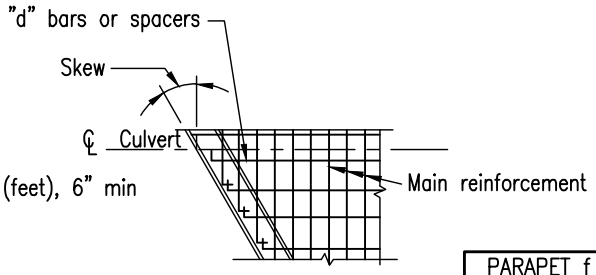


PART PLAN–SKEWED

PARAPET DETAILS FOR SINGLE SPAN CULVERTS

| PARAPET f BAR SIZE | | | |
|---|---|---|---|
| SPAN (S) \ SKEW ANGLE | 0° TO 15° | 16° TO 30° | 31° TO 45° |
| 4' | #4 | #4 | #4 |
| 6' | #4 | #4 | #5 |
| 8' | #4 | #5 | #6 |
| 10' | #5 | #6 | #7 |
| 12' | #6 | #7 | #8 |
| 14' | #7 | #8 | #9 |

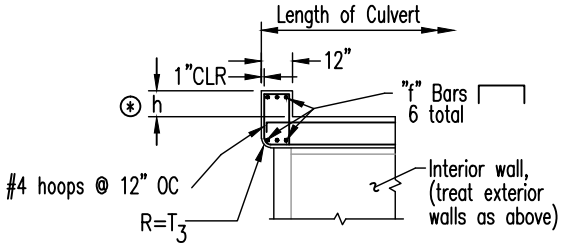


PART SECTION

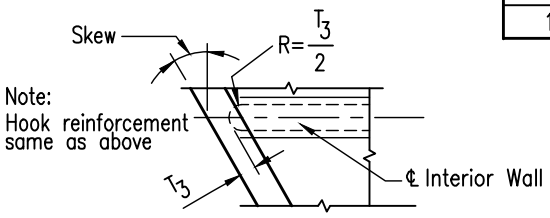


PART PLAN–SKEWED

PARAPET DETAILS FOR MULTIPLE SPAN CULVERTS

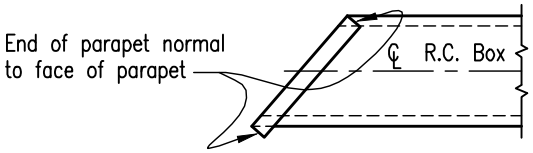


PARAPET DETAIL FOR SKEWED CULVERTS W/O WINGWALLS

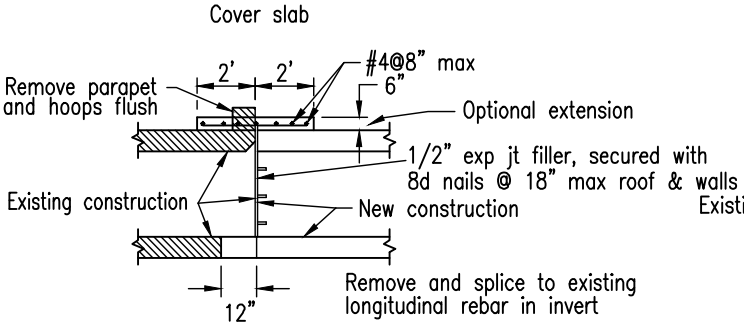


COVER: 1' AND GREATER

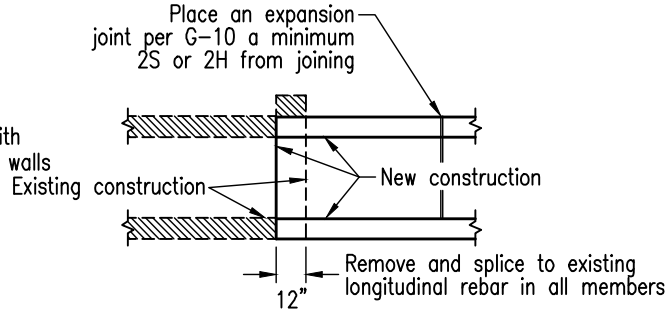


COVER: EXPOSED TOP AND LESS THAN 1'

CULVERT EXTENSION
20° SKEW MAXIMUM

| Revision | By | Approved | Date |
|---|---|---|---|
| ORIGINAL | | Kercheval | 12/75 |
| Add Metric | | T. Stanton | 03/03 |
| Reviewed | | T. Stanton | 04/06 |
| Edited | S.S. | T. Regello | 03/11 |
| | | | |

**SAN DIEGO REGIONAL STANDARD DRAWING**

# BOX CULVERT
# MISCELLANEOUS DETAILS NO. 2

RECOMMENDED BY THE SAN DIEGO REGIONAL STANDARDS COMMITTEE

T. Stanton 7/26/2012

Chairperson R.C.E. 19246 Date

DRAWING NUMBER **D-81B**

## GENERAL NOTES

QUANTITIES: Quantities are for the sloped invert slab and do not include splices in the longitudinal bars, nor temperature reinforcement for exposed top culvert, nor concrete or reinforcement for parapets or cutoff walls.

SPECIAL COVERAGE: Box standard plans are not to be used for culverts in a corrosive environment or where there is a severe abrasive flow condition.

DESIGNATION: Show on plans as span x height-strength classification x length (e.g. 4 x 4-A x 60'), followed by alternatives.

ALTERNATIVES: Invert will be sloped unless "Trapezoidal Invert", "Flat Invert" or "V Invert" is included in designation. Ends of culvert will be rounded unless "Square Ends" are designated. Parapets will be as shown unless "____ ft. parapet" is designated in plans. Such designations may be different for inlet and outlet ends.

REINFORCEMENT PLACEMENT: Main Reinforcement is positioned transverse or, for curved culverts, radial. When radial, reinforcing spacing is measured along C/L.

## CONSTRUCTION NOTES

CONCRETE: Bottom slab & walls shall be Class 560-B-3250. Top slab shall be Class 560-C-3250.

EXPANSION JOINTS: Bottom Slab - No expansion joints shall be placed.
Top Slab and Walls - When cover is less than span length, place 1/2" expansion joint filler at 50'± centers outside the paved roadway lanes and place weakened plane joints per Detail A of Weakened Planes Detail 3-2 of C-15 at 30'± centers under paved roadway lanes. When cover depth is greater than span length, place 1/2" expansion joint filler at 30'± centers and additional 1/2" expansion joints at locations of change of foundation character as directed by the Engineer.

CONSTRUCTION LOADS: Not permitted until concrete has reached a strength of 3,000 p.s.i. or age of 28 days, whichever occurs first, and falsework plans have been submitted by the Contractor to the Engineer and approved.

CONSTRUCTION JOINTS: Temporary joints may be permitted if normal (or radial) to C/L of RCB. Otherwise, the Contractor is to submit a proposal for consideration.

## DESIGN NOTES

SPECIFICATIONS
DESIGN: AASHTO's publication titled A Policy on Geomeric Design of Highways, dated 1984, with revisions as supplemented by State of California Bridge Planning and Design Manual.

Sections designed for culvert in a trench on hard foundation or culvert untrenched on yielding foundation. Special design will be required for culverts on piles or rock foundations.

LOADING
LIVE LOAD: For legal highway loads, use HS20-44 or alternative with 30% impact for all cover depths with no impact on invert.

COVER LESS THAN 2': Wheel load distribution on the top slab is E=0.175S+3.2' longitudinally and concentrated along the span. Wheel load distribution on the invert slab is 7.5' longitudinally and uniformly over the breadth of the culvert.

COVER 2' OR MORE: Wheel loads distributed uniformly over a square, the sides of which are 1.75 times the depth of cover, but not less longitudinally than E on the top slab, or 7.5' on the invert slab when such areas from several wheel concentrations overlap. The total load shall be considered as uniformly distributed over the area defined by the outside limits of the individual areas, but the overall longitudinal dimension shall not exceed the total length of the supporting slab. Neglect live load, on single spans when cover is more than 8' and exceeds span, and on multiple spans when cover exceeds distance between exterior walls.

DEAD LOAD: Earth load of 120 pcf and an equivalent fluid pressure of 36 pcf, reduced to 84 pcf and 25 pcf respectively for clear spans of 20' or less.

UNIT STRESSES: Fs = 20,000 psi, N = 10
Fc = 1,200 psi

Reinforcement embedment is 1-1/2 dia. clear, min 1" and in 1/4" increments, except as noted.

Distribution "d" bars expressed as a percent of main positive reinforcement.

Classification "A" top slab = $\frac{100}{\sqrt{SPAN}}$, max. 50% (unless traffic longitudinal)

Classification "B" to "E": Top and bottom slabs #4 @ 18" max.

## USE OF STANDARD DRAWING

"Strength Classification," as symbolized by the letters ("A", "B", "C" or "D") at the top of the data table is merely a convenient designation for a particular structural section for a culvert of any given opening. It is dictated by the cover or depth of fill over the the top slab.

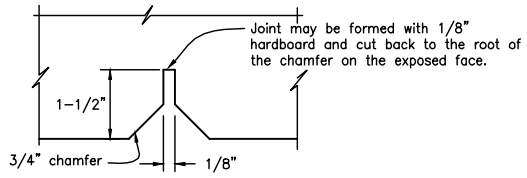


DETAIL A OF WEAKENED PLANES DETAIL 3-2
(Portion of Standard Drawing C-15)

LIVE LOAD & R.C.B. DIRECTIONAL TERMINOLOGY

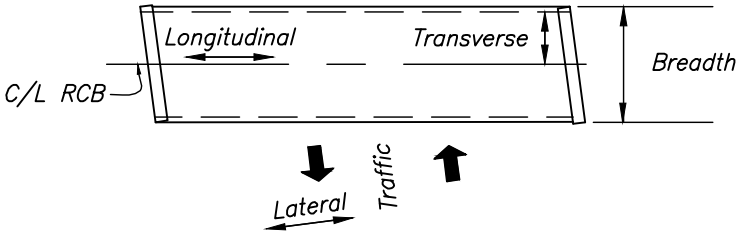


| Revision | By | Approved | Date |
|---|---|---|---|
| ORIGINAL | | Kercheval | 12/75 |
| Add Metric | | T. Stanton | 03/03 |
| Reviewed | | T. Stanton | 04/06 |
| Edited | S.S. | T. Regello | 03/11 |
| | | | |

SAN DIEGO REGIONAL STANDARD DRAWING

# BOX CULVERT
# MISCELLANEOUS DETAILS No. 1

RECOMMENDED BY THE SAN DIEGO REGIONAL STANDARDS COMMITTEE

7/26/2012

Chairperson R.C.E. 19246 Date

DRAWING NUMBER **D-81A**

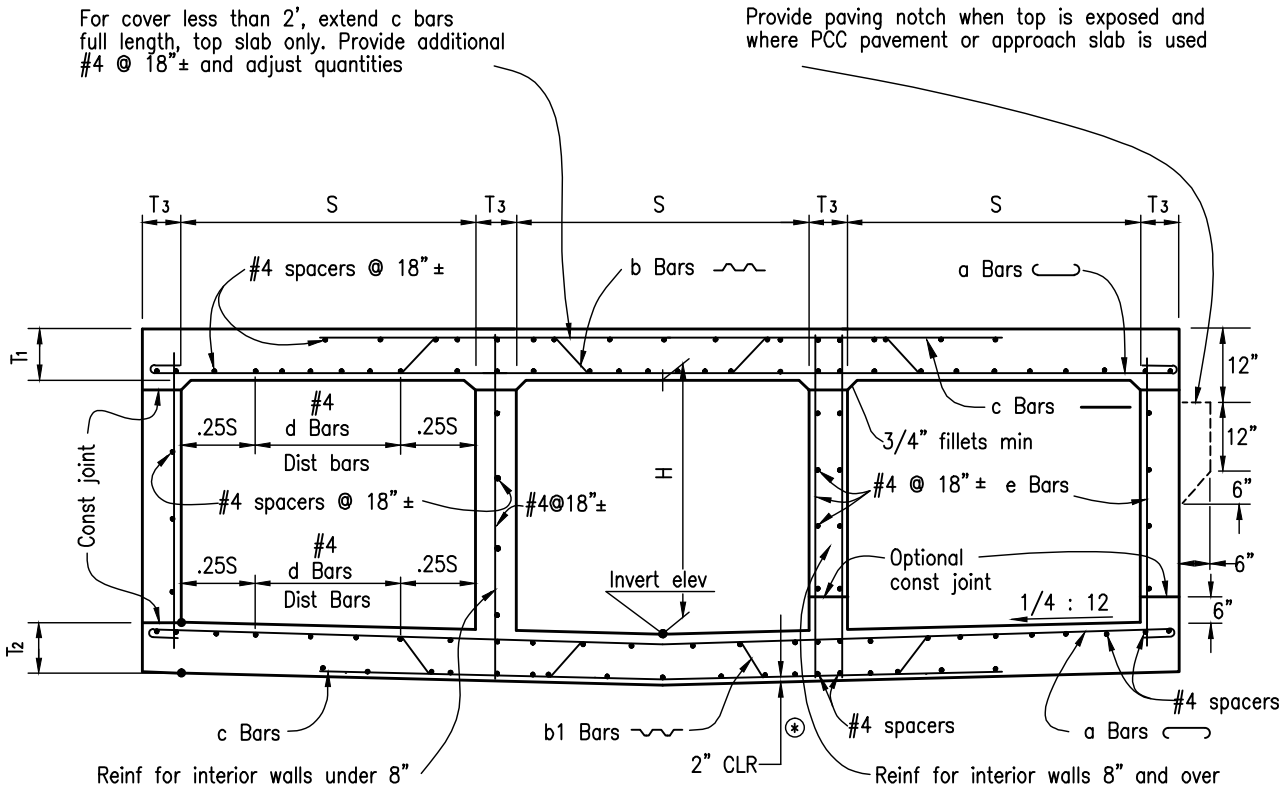


TYPICAL SECTION

⊛ For reinforcement clearance, except at bottom, see "Miscellaneous Details" on D-81A and D-81B.

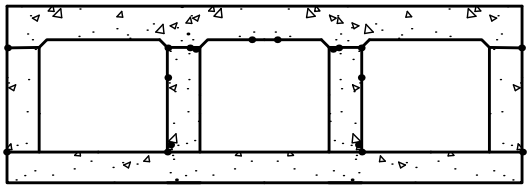

FLAT INVERT ALTERNATIVE

(When specified)

## NOTES

1. Spacers shall be #4 @ 18" oc in top slab and sidewall mats.
2. Remaining #4 Spacers shall be equally distributed in bottom slab mats.

| Revision | By | Approved | Date |
|---|---|---|---|
| ORIGINAL | | Kercheval | 12/75 |
| Add Metric | | T. Stanton | 03/03 |
| Reviewed | | T. Stanton | 04/06 |
| Edited | S.S. | T. Regello | 03/11 |
| | | | |

**SAN DIEGO REGIONAL STANDARD DRAWING**

# TRIPLE BOX CULVERT DETAILS NO.2

RECOMMENDED BY THE SAN DIEGO REGIONAL STANDARDS COMMITTEE

T. Stanton 7/26/2012

Chairperson R.C.E. 19246 Date

DRAWING NUMBER **D-78G**

| Revision | By | Approved | Date |
|---|---|---|---|
| ORIGINAL | | Kercheval | 12/75 |
| Add Metric | | T. Stanton | 03/03 |
| Reviewed | | T. Stanton | 04/06 |
| Edited | | T. Stanton | 02/09 |
| Edited | S.S. | T. Regello | 03/11 |

**SAN DIEGO REGIONAL STANDARD DRAWING**

# TRIPLE BOX CULVERT
# DETAILS No. 1

RECOMMENDED BY THE SAN DIEGO REGIONAL STANDARDS COMMITTEE

Chairperson R.C.E. 19246 Date 7/26/2012

DRAWING NUMBER **D-78F**

SPAN 12' (all measurements in feet and/or inches)

| SPAN | | | 12' | | | | | | | | | | | | | | | | | | | |
|---|---|---|---|---|---|---|---|---|---|---|---|---|---|---|---|---|---|---|---|---|---|---|
| HEIGHT | | | 6' | | | 7' | | | 8' | | | 9' | | | | 10' | | | | 12' | | | |
| STRENGTH CLASSIFICATION | | | A | B | C | A | B | C | A | B | C | A | B | C | D | A | B | C | D | A | B | C | D |
| MAX FILL OVER TOP | | | 2 | 10 | 18 | 2 | 10 | 18 | 2 | 10 | 18 | 2 | 11 | 20 | 30 | 2 | 11 | 20 | 30 | 2 | 11 | 20 | 30 |
| Conc. | Top Slab | $T_1$ | 10 1/4 | 11 1/2 | 14 | 10 1/4 | 11 1/2 | 14 | 10 1/4 | 11 1/2 | 14 | 10 1/4 | 12 | 14 3/4 | 17 3/4 | 10 1/4 | 12 | 14 3/4 | 17 3/4 | 10 1/4 | 12 | 14 3/4 | 17 3/4 |
| Conc. | Bottom Slab | $T_2$ | 8 1/4 | 12 | 14 1/2 | 8 1/2 | 12 | 14 3/4 | 8 1/2 | 12 | 14 3/4 | 8 3/4 | 12 1/2 | 15 1/2 | 18 1/4 | 8 3/4 | 12 1/2 | 15 1/2 | 18 1/4 | 9 | 12 3/4 | 15 3/4 | 18 1/4 |
| Conc. | Sidewalls | $T_3$ | 6 | 6 | 6 1/2 | 6 | 6 | 7 | 7 | 7 | 7 1/2 | 8 | 8 | 9 | 10 | 8 | 8 | 9 | 10 1/2 | 9 | 9 | 10 1/2 | 12 |
| Reinforcing Steel | "a" | Size Bar# | 7 | 6 | 7 | 7 | 6 | 7 | 7 | 6 | 7 | 7 | 6 | 7 | 8 | 7 | 6 | 7 | 8 | 7 | 6 | 7 | 8 |
| | | Spacing | 12 | 11 | 11 1/2 | 12 | 11 | 11 1/2 | 12 | 11 | 11 1/2 | 12 | 10 1/2 | 11 | 11 1/2 | 12 | 10 1/2 | 11 | 11 1/2 | 12 | 10 1/2 | 11 | 11 1/2 |
| | | Length | 39-1 | 38-10 | 39-3 | 39-1 | 38-10 | 39-5 | 39-5 | 39-2 | 39-7 | 39-9 | 39-6 | 40-1 | 40-10 | 39-9 | 39-6 | 40-1 | 41 | 40-1 | 39-10 | 40-7 | 41-6 |
| | "b" or "$b_1$" | Size Bar# | 7 | 7 | 8 | 7 | 7 | 8 | 7 | 7 | 8 | 7 | 7 | 8 | 9 | 7 | 7 | 8 | 9 | 7 | 7 | 8 | 9 |
| | | Spacing | 12 | 11 | 11 1/2 | 12 | 11 | 11 1/2 | 12 | 11 | 11 1/2 | 12 | 10 1/2 | 11 | 11 1/2 | 12 | 10 1/2 | 11 | 11 1/2 | 12 | 10 1/2 | 11 | 11 1/2 |
| | | Length "b" | 38-7 | 38-9 | 39-3 | 38-7 | 38-9 | 39-5 | 38-11 | 39-1 | 39-7 | 39-3 | 39-6 | 40-2 | 40-10 | 39-3 | 39-6 | 40-2 | 41 | 39-7 | 39-10 | 40-8 | 41-6 |
| | | Length "$b_1$" | 38-3 | 38-7 | 39-2 | 38-3 | 38-9 | 39-5 | 38-7 | 39-1 | 39-7 | 39 | 39-6 | 40-2 | 40-10 | 39 | 39-6 | 40-2 | 41 | 39-4 | 39-10 | 40-9 | 41-6 |
| | "c" | Size Bar# | 6 | 7 | 8 | 6 | 7 | 8 | 6 | 7 | 8 | 6 | 7 | 8 | 9 | 6 | 7 | 8 | 9 | 6 | 7 | 8 | 9 |
| | | Spacing | 12 | 11 | 11 1/2 | 12 | 11 | 11 1/2 | 12 | 11 | 11 1/2 | 12 | 10 1/2 | 11 | 11 1/2 | 12 | 10 1/2 | 11 | 11 1/2 | 12 | 10 1/2 | 11 | 11 1/2 |
| | | Length | 25 | 25 | 25-1 | 25 | 25 | 25-2 | 25-2 | 25-2 | 25-3 | 25-4 | 25-4 | 25-6 | 25-8 | 25-4 | 25-4 | 25-6 | 25-9 | 25-6 | 25-6 | 25-9 | 26 |
| | "d" Dist Bars | Top Slab-Tot. No. | 36 | 15 | 15 | 36 | 15 | 15 | 36 | 15 | 15 | 36 | 15 | 15 | 15 | 36 | 15 | 15 | 15 | 36 | 15 | 15 | 15 |
| | | Bottom Slab-Tot. No. | 15 | 15 | 15 | 15 | 15 | 15 | 15 | 15 | 15 | 15 | 15 | 15 | 15 | 15 | 15 | 15 | 15 | 15 | 15 | 15 | 15 |
| | "e" Bars | Size Bar# | 4 | 4 | 6 | 4 | 4 | 6 | 4 | 4 | 6 | 4 | 6 | 7 | 8 | 5 | 7 | 8 | 8 | 6 | 7 | 9 | 9 |
| | | Spacing | 18 | 7 | 11 1/2 | 12 | 5 3/4 | 11 1/2 | 12 | 5 1/2 | 9 | 10 | 10 1/2 | 11 | 11 1/2 | 12 | 10 1/2 | 11 | 6 1/2 | 12 | 9 | 11 | 9 |
| | Spacers | Number | 76 | | | 80 | | | 84 | | | 104 | | | | 110 | | | | 116 | | | |
| Quan. | Concrete: C.Y. per lin. ft. | | 2.60 | 3.18 | 3.82 | 2.70 | 3.26 | 3.98 | 2.88 | 3.45 | 4.13 | 3.13 | 3.79 | 4.61 | 5.45 | 3.23 | 3.89 | 4.72 | 5.65 | 3.62 | 4.28 | 5.24 | 6.18 |
| Quan. | Reinf :lbs per lin. ft. | | 489 | 505 | 628 | 497 | 516 | 637 | 505 | 527 | 654 | 536 | 582 | 719 | 872 | 548 | 606 | 745 | 939 | 575 | 636 | 793 | 963 |

## NOTE

For boxes of height less than that shown in table, use next greater table height slabs, wall dimensions and reinforcing steel, and make necessary changes in bar lengths, number of spacers and quantities. Number of "d" bars in table is slab total for all cells.

| Revision | By | Approved | Date |
|---|---|---|---|
| ORIGINAL | | Kercheval | 12/75 |
| Add Metric | | T. Stanton | 03/03 |
| Reviewed | | T. Stanton | 04/06 |
| Edited | | T. Stanton | 02/09 |
| Edited | S.S. | T. Regello | 03/11 |

SAN DIEGO REGIONAL STANDARD DRAWING

# TRIPLE BOX CULVERT
## DETAILS No. 1

RECOMMENDED BY THE SAN DIEGO REGIONAL STANDARDS COMMITTEE

Chairperson R.C.E. 19246 Date 7/26/2012

DRAWING NUMBER **D-78E**

SPAN 10' (all measurements in feet and/or inches)

| SPAN | | | 10' | | | | | | | | | | | | | | | |
|---|---|---|---|---|---|---|---|---|---|---|---|---|---|---|---|---|---|---|
| HEIGHT | | | 5' | | | 6' | | | 7' | | | 8' | | | | 10' | | | |
| STRENGTH CLASSIFICATION | | | A | B | C | A | B | C | A | B | C | A | B | C | D | A | B | C | D |
| MAX FILL OVER TOP | | | 2 | 11 | 20 | 2 | 11 | 20 | 2 | 11 | 20 | 2 | 11 | 20 | 28 | 2 | 11 | 20 | 28 |
| Conc. | Top Slab | $T_1$ | 9 | 10 | 12 | 9 | 10 | 12 | 9 | 10 | 12 | 9 | 10 | 12 | 14 1/4 | 9 | 10 1/4 | 12 1/2 | 14 1/2 |
| Conc. | Bottom Slab | $T_2$ | 7 1/2 | 10 3/4 | 13 | 7 1/2 | 10 3/4 | 13 | 7 1/2 | 10 3/4 | 13 | 7 3/4 | 11 | 13 | 15 | 8 | 11 | 13 1/2 | 15 |
| Conc. | Sidewalls | $T_3$ | 6 | 6 | 6 | 6 | 6 | 6 | 6 | 6 | 6 1/2 | 7 | 7 | 7 1/2 | 8 1/2 | 8 | 8 1/2 | 9 | 10 |
| Reinforcing Steel | "a" | Size Bar # | 6 | 6 | 6 | 6 | 6 | 6 | 6 | 6 | 6 | 6 | 6 | 6 | 7 | 6 | 6 | 6 | 7 |
| | | Spacing | 10 1/2 | 13 | 10 | 10 1/2 | 13 | 10 | 10 1/2 | 13 | 10 | 10 1/2 | 13 | 10 | 11 | 10 1/2 | 13 | 10 | 11 |
| | | Length | 32–10 | 32–10 | 32–10 | 32–10 | 32–10 | 32–10 | 32–10 | 32–10 | 32–10 | 33–2 | 33–2 | 33–4 | 33–8 | 33–6 | 33–8 | 33–10 | 34–2 |
| | "b" or "$b_1$" | Size Bar # | 6 | 7 | 7 | 6 | 7 | 7 | 6 | 7 | 7 | 6 | 7 | 7 | 8 | 6 | 7 | 7 | 8 |
| | | Spacing | 10 1/2 | 13 | 10 | 10 1/2 | 13 | 10 | 10 1/2 | 13 | 10 | 10 1/2 | 13 | 10 | 11 | 10 1/2 | 13 | 10 | 11 |
| | | Length "b" | 32–6 | 32–7 | 32–10 | 32–6 | 32–7 | 32–10 | 32–6 | 32–7 | 33 | 32–10 | 32–11 | 33–4 | 33–11 | 32–2 | 33–5 | 33–11 | 34–5 |
| | | Length "$b_1$" | 32–2 | 32–7 | 32–11 | 32–2 | 32–7 | 32–11 | 32–2 | 32–7 | 33–1 | 32–6 | 32–11 | 33–5 | 33–11 | 32–11 | 33–5 | 33–11 | 34–5 |
| | "c" | Size Bar # | 5 | 7 | 7 | 5 | 7 | 7 | 5 | 7 | 7 | 5 | 7 | 7 | 8 | 5 | 7 | 7 | 8 |
| | | Spacing | 10 1/2 | 13 | 10 | 10 1/2 | 13 | 10 | 10 1/2 | 13 | 10 | 10 1/2 | 13 | 10 | 11 | 10 1/2 | 13 | 10 | 11 |
| | | Length | 21 | 21 | 21 | 21 | 21 | 21 | 21 | 21 | 21–1 | 21–2 | 21–2 | 21–3 | 21–5 | 21–4 | 21–5 | 21–6 | 21–8 |
| | "d" Dist Bars | Top Slab–Tot. No. | 27 | 15 | 15 | 27 | 15 | 15 | 27 | 15 | 15 | 27 | 15 | 15 | 15 | 27 | 15 | 15 | 15 |
| | | Bottom Slab–Tot. No. | 15 | 15 | 15 | 15 | 15 | 15 | 15 | 15 | 15 | 15 | 15 | 15 | 15 | 15 | 15 | 15 | 15 |
| | "e" Bars | Size Bar # | 4 | 4 | 5 | 4 | 5 | 6 | 4 | 6 | 7 | 4 | 6 | 7 | 8 | 5 | 6 | 8 | 8 |
| | | Spacing | 18 | 13 | 10 | 18 | 13 | 10 | 13 | 13 | 10 | 10 1/2 | 12 | 10 | 11 | 10 1/2 | 9 | 10 | 9 |
| | Spacers | Number | 68 | | | 68 | | | 72 | | | 76 | | | 94 | 102 | | | |
| Quan. | Concrete: C.Y. per lin. ft. | | 1.98 | 2.40 | 2.82 | 2.06 | 2.48 | 2.90 | 2.13 | 2.55 | 3.03 | 2.34 | 2.77 | 3.23 | 3.78 | 2.68 | 3.18 | 3.73 | 4.22 |
| Quan. | Reinf :lbs per lin. ft. | | 358 | 372 | 470 | 359 | 379 | 482 | 367 | 391 | 502 | 377 | 402 | 514 | 590 | 421 | 453 | 577 | 632 |

## NOTE

For boxes of height less than that shown in table, use next greater table height slabs, wall dimensions and reinforcing steel, and make necessary changes in bar lengths, number of spacers and quantities. Number of "d" bars in table is slab total for all cells.

SPAN 8' (all measurements in feet and/or inches)

| SPAN | | | 8' | | | | | | | | | | | | | | | | |
|---|---|---|---|---|---|---|---|---|---|---|---|---|---|---|---|---|---|---|---|
| HEIGHT | | | 4' | | | 5' | | | 6' | | | 7' | | | | 8' | | | |
| STRENGTH CLASSIFICATION | | | A | B | C | A | B | C | A | B | C | A | B | C | D | A | B | C | D |
| MAX FILL OVER TOP | | | 2 | 11 | 20 | 2 | 11 | 20 | 2 | 11 | 20 | 2 | 11 | 20 | 28 | 2 | 11 | 20 | 28 |
| Conc. | Top Slab | $T_1$ | 8 1/4 | 8 1/4 | 10 1/4 | 8 1/4 | 8 1/4 | 10 1/4 | 8 1/4 | 8 1/4 | 10 1/4 | 8 1/4 | 8 1/4 | 10 1/4 | 11 1/2 | 8 1/4 | 8 1/4 | 10 1/4 | 11 1/2 |
| Conc. | Bottom Slab | $T_2$ | 6 1/2 | 9 | 11 | 6 1/2 | 9 1/4 | 11 | 6 1/2 | 9 1/4 | 11 | 6 3/4 | 9 1/4 | 11 | 12 1/4 | 6 3/4 | 9 1/4 | 11 | 12 1/4 |
| Conc. | Sidewalls | $T_3$ | 6 | 6 | 6 | 6 | 6 | 6 | 6 | 6 | 6 | 6 | 6 | 6 1/2 | 6 1/2 | 7 | 7 | 7 1/2 | 8 1/2 |
| Reinforcing Steel | "a" | Size Bar# | 6 | 5 | 5 | 6 | 5 | 5 | 6 | 5 | 5 | 6 | 5 | 5 | 6 | 6 | 5 | 5 | 6 |
| | | Spacing | 11 1/2 | 12 | 12 | 11 1/2 | 12 | 12 | 11 1/2 | 12 | 12 | 11 1/2 | 12 | 12 | 10 1/2 | 11 1/2 | 11 1/2 | 12 | 10 1/2 |
| | | Length | 26–10 | 26–9 | 26–9 | 26–10 | 26–9 | 26–9 | 26–10 | 26–9 | 26–9 | 26–10 | 26–9 | 26–11 | 27–4 | 27–2 | 27–1 | 27–3 | 27–8 |
| | "b" or "$b_1$" | Size Bar# | 6 | 6 | 7 | 6 | 6 | 7 | 6 | 6 | 7 | 6 | 6 | 7 | 7 | 6 | 6 | 7 | 7 |
| | | Spacing | 11 1/2 | 12 | 12 | 11 1/2 | 12 | 12 | 11 1/2 | 12 | 12 | 11 1/2 | 12 | 12 | 10 1/2 | 11 1/2 | 11 1/2 | 12 | 10 1/2 |
| | | Length "b" | 26–5 | 26–5 | 26–7 | 26–5 | 26–5 | 26–7 | 26–5 | 26–5 | 26–7 | 26–5 | 26–5 | 26–9 | 27–3 | 26–9 | 26–9 | 27–1 | 27–7 |
| | | Length "$b_1$" | 26 | 26–4 | 26–7 | 26 | 26–5 | 26–7 | 26 | 26–5 | 26–7 | 26–1 | 26–5 | 26–9 | 27–3 | 26–5 | 26–9 | 27–1 | 27–7 |
| | "c" | Size Bar# | 4 | 6 | 7 | 4 | 6 | 7 | 4 | 6 | 7 | 4 | 6 | 7 | 7 | 4 | 6 | 7 | 7 |
| | | Spacing | 11 1/2 | 12 | 12 | 11 1/2 | 12 | 12 | 11 1/2 | 12 | 12 | 11 1/2 | 12 | 12 | 10 1/2 | 11 1/2 | 11 1/2 | 12 | 10 1/2 |
| | | Length | 17 | 17 | 17 | 17 | 17 | 17 | 17 | 17 | 17 | 17 | 17 | 17–1 | 17–3 | 17–2 | 17–2 | 17–3 | 17–5 |
| | "d" Dist Bars | Top Slab–Tot. No. | 24 | 12 | 12 | 24 | 12 | 12 | 24 | 12 | 12 | 24 | 12 | 12 | 12 | 24 | 12 | 12 | 12 |
| | | Bottom Slab–Tot. No. | 12 | 12 | 12 | 12 | 12 | 12 | 12 | 12 | 12 | 12 | 12 | 12 | 12 | 12 | 12 | 12 | 12 |
| | "e" Bars | Size Bar# | 4 | 4 | 4 | 4 | 4 | 5 | 4 | 5 | 6 | 4 | 6 | 7 | 7 | 4 | 6 | 7 | 7 |
| | | Spacing | 18 | 18 | 12 | 18 | 12 | 12 | 18 | 12 | 12 | 11 1/2 | 12 | 12 | 10 1/2 | 11 1/2 | 11 1/2 | 12 | 10 1/2 |
| | Spacers | Number | 58 | | | 62 | | | 62 | | | 66 | | | | 70 | | | 88 |
| Quan. | Concrete: C.Y. per lin. ft. | | 1.47 | 1.67 | 1.99 | 1.54 | 1.76 | 2.06 | 1.62 | 1.84 | 2.14 | 1.71 | 1.91 | 2.26 | 2.57 | 1.90 | 2.10 | 2.46 | 2.79 |
| Quan. | Reinf :lbs per lin. ft. | | 261 | 250 | 301 | 266 | 257 | 310 | 267 | 264 | 320 | 276 | 277 | 336 | 409 | 283 | 295 | 347 | 441 |

## NOTE

For boxes of height less than that shown in table, use next greater table height slabs, wall dimensions and reinforcing steel, and make necessary changes in bar lengths, number of spacers and quantities. Number of "d" bars in table is slab total for all cells.

| Revision | By | Approved | Date |
|---|---|---|---|
| ORIGINAL | | Kercheval | 12/75 |
| Add Metric | | T. Stanton | 03/03 |
| Reviewed | | T. Stanton | 04/06 |
| Edited | | T. Stanton | 02/09 |
| Edited | S.S. | T. Regello | 03/11 |

**SAN DIEGO REGIONAL STANDARD DRAWING**

# TRIPLE BOX CULVERT
# DETAILS No. 1

RECOMMENDED BY THE SAN DIEGO REGIONAL STANDARDS COMMITTEE

Chairperson R.C.E. 19246 Date 7/26/2012

DRAWING NUMBER **D-78D**

SPAN 6' (all measurements in feet and/or inches)

| SPAN | | | 6' | | | | | | | | | | | | | |
|---|---|---|---|---|---|---|---|---|---|---|---|---|---|---|---|---|
| HEIGHT | | | 3' | | | 4' | | | 5' | | | | 6' | | | |
| STRENGTH CLASSIFICATION | | | A | B | C | A | B | C | A | B | C | D | A | B | C | D |
| MAX FILL OVER TOP | | | 3 | 13 | 23 | 3 | 13 | 23 | 3 | 13 | 23 | 30 | 3 | 13 | 23 | 30 |
| Conc. | Top Slab | $T_1$ | 7 1/2 | 7 1/2 | 8 1/4 | 7 1/2 | 7 1/2 | 8 1/4 | 7 1/2 | 7 1/2 | 8 1/4 | 9 1/4 | 7 1/2 | 7 1/2 | 8 1/4 | 9 1/4 |
| Conc. | Bottom Slab | $T_2$ | 6 | 7 3/4 | 9 1/4 | 6 | 7 3/4 | 9 1/4 | 6 | 8 | 9 1/4 | 10 | 6 | 8 | 9 1/4 | 10 1/4 |
| Conc. | Sidewalls | $T_3$ | 6 | 6 | 6 | 6 | 6 | 6 | 6 | 6 | 6 | 6 | 6 | 6 | 6 | 6 |
| Reinforcing Steel | "a" | Size Bar # | 6 | 5 | 5 | 6 | 5 | 5 | 6 | 5 | 5 | 5 | 6 | 5 | 5 | 5 |
| Reinforcing Steel | "a" | Spacing | 13 | 14 | 11 1/2 | 13 | 14 | 11 1/2 | 13 | 14 | 11 1/2 | 10 | 13 | 14 | 11 1/2 | 10 |
| Reinforcing Steel | "a" | Length | 20-10 | 20-9 | 20-9 | 20-10 | 20-9 | 20-9 | 20-10 | 20-9 | 20-9 | 20-9 | 20-10 | 20-9 | 20-9 | 20-9 |
| Reinforcing Steel | "b" or "$b_1$" | Size Bar # | 6 | 6 | 6 | 6 | 6 | 6 | 6 | 6 | 6 | 6 | 6 | 6 | 6 | 6 |
| Reinforcing Steel | "b" or "$b_1$" | Spacing | 13 | 14 | 11 1/2 | 13 | 14 | 11 1/2 | 13 | 14 | 11 1/2 | 10 | 13 | 14 | 11 1/2 | 10 |
| Reinforcing Steel | "b" or "$b_1$" | Length "b" | 20-3 | 20-3 | 20-5 | 20-3 | 20-3 | 20-5 | 20-3 | 20-3 | 20-5 | 20-6 | 20-3 | 20-3 | 20-5 | 20-6 |
| Reinforcing Steel | "b" or "$b_1$" | Length "$b_1$" | 20 | 20-2 | 20-5 | 20 | 20-2 | 20-5 | 20 | 20-2 | 20-5 | 20-6 | 20 | 20 | 20-5 | 20-7 |
| Reinforcing Steel | "c" | Size Bar # | 4 | 6 | 6 | 4 | 6 | 6 | 4 | 6 | 6 | 6 | 4 | 6 | 6 | 6 |
| Reinforcing Steel | "c" | Spacing | 13 | 14 | 11 1/2 | 13 | 14 | 11 1/2 | 13 | 14 | 11 1/2 | 10 | 13 | 14 | 11 1/2 | 10 |
| Reinforcing Steel | "c" | Length | 13 | 13 | 13 | 13 | 13 | 13 | 13 | 13 | 13 | 13 | 13 | 13 | 13 | 13 |
| Reinforcing Steel | "d" Dist Bars | Top Slab-Tot. No. | 18 | 9 | 9 | 18 | 9 | 9 | 18 | 9 | 9 | 9 | 18 | 9 | 9 | 9 |
| Reinforcing Steel | "d" Dist Bars | Bottom Slab-Tot. No. | 9 | 9 | 9 | 9 | 9 | 9 | 9 | 9 | 9 | 9 | 9 | 9 | 9 | 9 |
| Reinforcing Steel | "e" Bars | Size Bar # | 4 | 4 | 4 | 4 | 4 | 4 | 4 | 4 | 5 | 5 | 4 | 4 | 6 | 6 |
| Reinforcing Steel | "e" Bars | Spacing | 18 | 18 | 18 | 18 | 18 | 11 1/2 | 18 | 11 1/2 | 12 | 10 | 18 | 8 | 12 | 10 |
| Reinforcing Steel | Spacers | Number | 40 | | | 40 | | | 52 | | | | 48 | | | |
| Quan. | Concrete: C.Y. per lin. ft. | | 1.05 | 1.15 | 1.29 | 1.12 | 1.23 | 1.37 | 1.19 | 1.32 | 1.44 | 1.55 | 1.27 | 1.39 | 1.52 | 1.64 |
| Quan. | Reinf :lbs per lin. ft. | | 181 | 168 | 196 | 183 | 170 | 200 | 187 | 177 | 209 | 235 | 192 | 187 | 221 | 249 |

## NOTE

For boxes of height less than that shown in table, use next greater table height slabs, wall dimensions and reinforcing steel, and make necessary changes in bar lengths, number of spacers and quantities. Number of "d" bars in table is slab total for all cells.

| Revision | By | Approved | Date |
|---|---|---|---|
| ORIGINAL | | Kercheval | 12/75 |
| Add Metric | | T. Stanton | 03/03 |
| Reviewed | | T. Stanton | 04/06 |
| Edited | | T. Stanton | 02/09 |
| Edited | S.S. | T. Regello | 03/11 |

**SAN DIEGO REGIONAL STANDARD DRAWING**

**TRIPLE BOX CULVERT**

**DETAILS No. 1**

RECOMMENDED BY THE SAN DIEGO REGIONAL STANDARDS COMMITTEE

Chairperson R.C.E. 19246 Date 7/26/2012

DRAWING NUMBER **D-78C**

SPAN 5' (all measurements in feet and/or inches)

| SPAN | | | 5' | | | | | | | | | | | | | |
|---|---|---|---|---|---|---|---|---|---|---|---|---|---|---|---|---|
| HEIGHT | | | 2' | | | 3' | | | 4' | | | | 5' | | | |
| STRENGTH CLASSIFICATION | | | A | B | C | A | B | C | A | B | C | D | A | B | C | D |
| MAX FILL OVER TOP | | | 8 | 17 | 26 | 8 | 17 | 26 | 8 | 17 | 26 | 35 | 8 | 17 | 26 | 35 |
| Conc. | Top Slab | $T_1$ | 6 3/4 | 6 3/4 | 7 1/2 | 6 3/4 | 6 3/4 | 7 1/2 | 6 3/4 | 6 3/4 | 7 1/2 | 8 1/2 | 6 3/4 | 6 3/4 | 7 1/2 | 8 1/2 |
| Conc. | Bottom Slab | $T_2$ | 6 1/4 | 7 1/4 | 8 1/2 | 6 1/4 | 7 1/4 | 8 1/2 | 6 1/4 | 7 1/4 | 8 1/2 | 9 1/2 | 6 1/4 | 7 1/2 | 8 1/2 | 9 1/2 |
| Conc. | Sidewalls | $T_3$ | 6 | 6 | 6 | 6 | 6 | 6 | 6 | 6 | 6 | 6 | 6 | 6 | 6 | 6 |
| Reinforcing Steel | "a" | Size Bar# | 5 | 4 | 5 | 5 | 4 | 5 | 5 | 4 | 5 | 5 | 5 | 4 | 5 | 5 |
| | | Spacing | 10 | 11 1/2 | 13 | 10 | 11 1/2 | 13 | 10 | 11 | 13 | 11 1/2 | 10 | 11 | 13 | 11 1/2 |
| | | Length | 17-9 | 17-8 | 17-9 | 17-9 | 17-8 | 17-9 | 17-9 | 17-8 | 17-9 | 17-9 | 17-9 | 17-8 | 17-9 | 17-9 |
| | "b" or "$b_1$" | Size Bar# | 5 | 5 | 6 | 5 | 5 | 6 | 5 | 5 | 6 | 6 | 5 | 5 | 6 | 6 |
| | | Spacing | 10 | 11 1/2 | 13 | 10 | 11 1/2 | 13 | 10 | 11 | 13 | 11 1/2 | 10 | 11 | 13 | 11 1/2 |
| | | Length "b" | 17-3 | 17-3 | 17-3 | 17-3 | 17-3 | 17-3 | 17-3 | 17-3 | 17-3 | 17-3 | 17-3 | 17-3 | 17-3 | 17-5 |
| | | Length "$b_1$" | 17 | 17-2 | 17-4 | 17 | 17-2 | 17-4 | 17 | 17-2 | 17-4 | 17-5 | 17 | 17-2 | 17-4 | 17-5 |
| | "c" | Size Bar# | 4 | 5 | 6 | 4 | 5 | 6 | 4 | 5 | 6 | 6 | 4 | 5 | 6 | 6 |
| | | Spacing | 10 | 11 1/2 | 13 | 10 | 11 1/2 | 13 | 10 | 11 | 13 | 11 1/2 | 10 | 11 | 13 | 11 1/2 |
| | | Length | 11 | 11 | 11 | 11 | 11 | 11 | 11 | 11 | 11 | 11 | 11 | 11 | 11 | 11 |
| | "d" Dist Bars | Top Slab-Tot. No. | 18 | 9 | 9 | 18 | 9 | 9 | 18 | 9 | 9 | 9 | 18 | 9 | 9 | 9 |
| | | Bottom Slab-Tot. No. | 9 | 9 | 9 | 9 | 9 | 9 | 9 | 9 | 9 | 9 | 9 | 9 | 9 | 9 |
| | "e" Bars | Size Bar# | 4 | 4 | 4 | 4 | 4 | 4 | 4 | 4 | 4 | 5 | 4 | 4 | 4 | 6 |
| | | Spacing | 18 | 18 | 18 | 18 | 18 | 18 | 18 | 17 | 11 1/2 | 11 1/2 | 18 | 11 | 4 | 11 1/2 |
| | Spacers | Number | 34 | | | 38 | | | 38 | | | | 42 | | | |
| Quan. | Concrete: C.Y. per lin. ft. | | 0.82 | 0.87 | 0.98 | 0.90 | 0.95 | 1.05 | 0.97 | 1.02 | 1.13 | 1.23 | 1.04 | 1.11 | 1.20 | 1.31 |
| Quan. | Reinf :lbs per lin. ft. | | 150 | 126 | 153 | 155 | 130 | 157 | 157 | 136 | 161 | 181 | 161 | 143 | 171 | 192 |

## NOTE

For boxes of height less than that shown in table, use next greater table height slabs, wall dimensions and reinforcing steel, and make necessary changes in bar lengths, number of spacers and quantities. Number of "d" bars in table is slab total for all cells.

| Revision | By | Approved | Date |
|---|---|---|---|
| ORIGINAL | | Kercheval | 12/75 |
| Add Metric | | T. Stanton | 03/03 |
| Reviewed | | T. Stanton | 04/06 |
| Edited | | T. Stanton | 02/09 |
| Edited | S.S. | T. Regello | 03/11 |

**SAN DIEGO REGIONAL STANDARD DRAWING**

# TRIPLE BOX CULVERT
# DETAILS No. 1

RECOMMENDED BY THE SAN DIEGO REGIONAL STANDARDS COMMITTEE

7/26/2012

Chairperson R.C.E. 19246 Date

DRAWING NUMBER **D-78B**

SPAN 4' (all measurements in feet and/or inches)

| SPAN | | | 4' | | | | | | | | |
|---|---|---|---|---|---|---|---|---|---|---|---|
| HEIGHT | | | 2' | | | 3' | | | 4' | | |
| STRENGTH CLASSIFICATION | | | A | B | C | A | B | C | A | B | C |
| MAX FILL OVER TOP | | | 10 | 24 | 38 | 10 | 24 | 38 | 10 | 24 | 38 |
| Conc. | Top Slab | $T_1$ | 6 1/4 | 6 1/4 | 7 1/4 | 6 1/4 | 6 1/4 | 7 1/4 | 6 1/4 | 6 1/4 | 7 1/4 |
| Conc. | Bottom Slab | $T_2$ | 6 | 7 | 8 1/4 | 6 | 7 | 8 1/4 | 6 | 7 | 8 1/4 |
| Conc. | Sidewalls | $T_3$ | 6 | 6 | 6 | 6 | 6 | 6 | 6 | 6 | 6 |
| Reinforcing Steel | "a" | Size Bar # | 5 | 4 | 5 | 5 | 4 | 5 | 5 | 4 | 5 |
| Reinforcing Steel | "a" | Spacing | 11 | 11 1/2 | 13 | 11 | 11 1/2 | 13 | 11 | 11 1/2 | 13 |
| Reinforcing Steel | "a" | Length | 14–9 | 14–8 | 14–9 | 14–9 | 14–8 | 14–9 | 14–9 | 14–8 | 14–9 |
| Reinforcing Steel | "b" or "$b_1$" | Size Bar # | 5 | 5 | 6 | 5 | 5 | 6 | 5 | 5 | 6 |
| Reinforcing Steel | "b" or "$b_1$" | Spacing | 11 | 11 1/2 | 13 | 11 | 11 1/2 | 13 | 11 | 11 1/2 | 13 |
| Reinforcing Steel | "b" or "$b_1$" | Length "b" | 14–2 | 14–2 | 14–3 | 14–2 | 14–2 | 14–3 | 14–2 | 14–2 | 14–3 |
| Reinforcing Steel | "b" or "$b_1$" | Length "$b_1$" | 14 | 14–2 | 14–3 | 14 | 14–2 | 14–3 | 14 | 14–2 | 14–3 |
| Reinforcing Steel | "c" | Size Bar # | 4 | 5 | 6 | 4 | 5 | 6 | 4 | 5 | 6 |
| Reinforcing Steel | "c" | Spacing | 11 | 11 1/2 | 13 | 11 | 11 1/2 | 13 | 11 | 11 1/2 | 13 |
| Reinforcing Steel | "c" | Length | 9 | 9 | 9 | 9 | 9 | 9 | 9 | 9 | 9 |
| Reinforcing Steel | "d" Dist Bars | Top Slab–Tot. No. | 15 | 9 | 9 | 15 | 9 | 9 | 15 | 9 | 9 |
| Reinforcing Steel | "d" Dist Bars | Bottom Slab–Tot. No. | 9 | 9 | 9 | 9 | 9 | 9 | 9 | 9 | 9 |
| Reinforcing Steel | "e" Bars | Size Bar # | 4 | 4 | 4 | 4 | 4 | 4 | 4 | 4 | 5 |
| Reinforcing Steel | "e" Bars | Spacing | 18 | 18 | 18 | 18 | 18 | 13 | 18 | 11 1/2 | 13 |
| Reinforcing Steel | Spacers | Number | 34 | | | 38 | | | 42 | | |
| Quan. | Concrete: C.Y. per lin. ft. | | 0.67 | 0.71 | 0.81 | 0.75 | 0.79 | 0.89 | 0.82 | 0.86 | 0.96 |
| Quan. | Reinf :lbs per lin. ft. | | 122 | 110 | 133 | 127 | 115 | 138 | 131 | 122 | 147 |

## NOTE

For boxes of height less than that shown in table, use next greater table height slabs, wall dimensions and reinforcing steel, and make necessary changes in bar lengths, number of spacers and quantities. Number of "d" bars in table is slab total for all cells.

| Revision | By | Approved | Date |
|---|---|---|---|
| ORIGINAL | | Kercheval | 12/75 |
| Add Metric | | T. Stanton | 03/03 |
| Reviewed | | T. Stanton | 04/06 |
| Edited | | T. Stanton | 02/09 |
| Edited | S.S. | T. Regello | 03/11 |

**SAN DIEGO REGIONAL STANDARD DRAWING**

**TRIPLE BOX CULVERT**

**DETAILS No. 1**

RECOMMENDED BY THE SAN DIEGO REGIONAL STANDARDS COMMITTEE

7/26/2012

Chairperson R.C.E. 19246 Date

DRAWING NUMBER **D-78A**

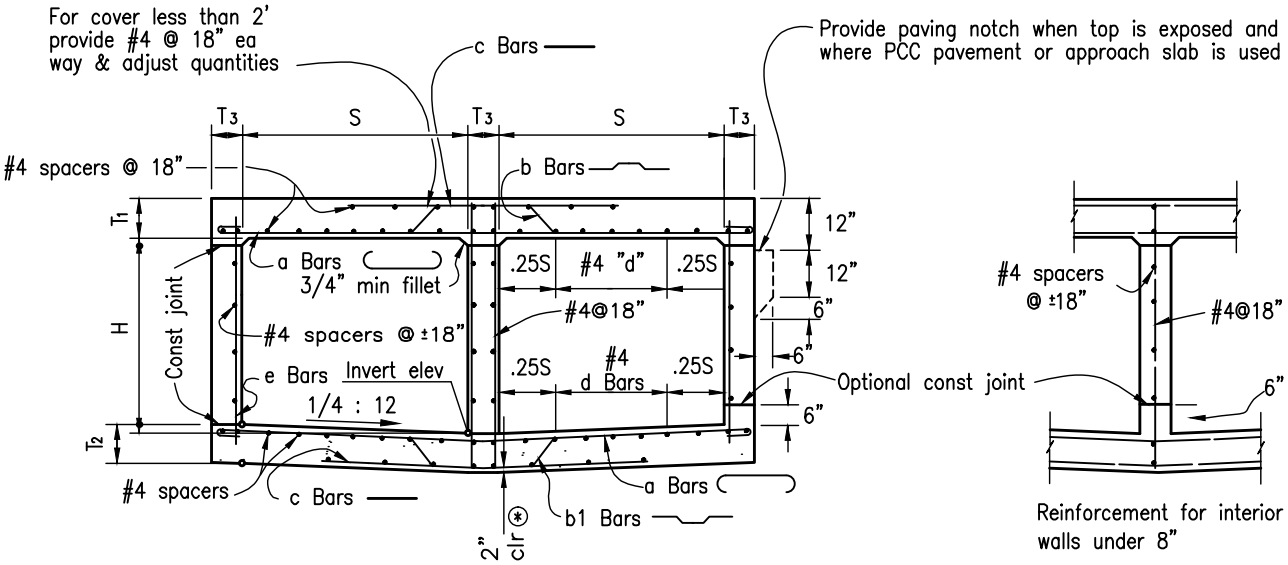


TYPICAL SECTION

(Showing reinforcement for interior walls 8" and over)

⊛ For reinforcement clearance, except at bottom, see "Miscellaneous Details," on D-81A and D-81B.

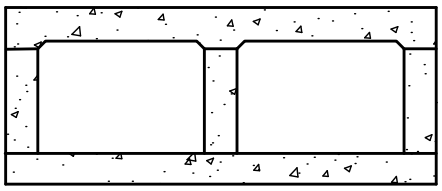

"FLAT INVERT" ALTERNATIVE

(When specified)

| Revision | By | Approved | Date |
|---|---|---|---|
| ORIGINAL | | Kercheval | 12/75 |
| Add Metric | | T. Stanton | 03/03 |
| Reviewed | | T. Stanton | 04/06 |
| Edited | S.S. | T. Regello | 03/11 |
| | | | |

**SAN DIEGO REGIONAL STANDARD DRAWING**

# DOUBLE BOX CULVERT DETAILS NO. 2

RECOMMENDED BY THE SAN DIEGO REGIONAL STANDARDS COMMITTEE

7/26/2012

Chairperson R.C.E. 19246 Date

DRAWING NUMBER **D-77G**

SPAN 12' (all measurements in feet and/or inches unless otherwise noted)

| SPAN | | | 12' | | | | | | | | | | | | | | | | | | | |
|---|---|---|---|---|---|---|---|---|---|---|---|---|---|---|---|---|---|---|---|---|---|---|
| HEIGHT | | | 6' | | | 7' | | | 8' | | | 9' | | | | 10' | | | | 12' | | | |
| STRENGTH CLASSIFICATION | | | A | B | C | A | B | C | A | B | C | A | B | C | D | A | B | C | D | A | B | C | D |
| MAX FILL OVER TOP | | | 2 | 14 | 26 | 2 | 14 | 26 | 2 | 14 | 26 | 2 | 14 | 26 | 36 | 2 | 14 | 26 | 36 | 2 | 14 | 26 | 36 |
| Conc. | Top Slab | $T_1$ | 10 | 14 | 17 1/2 | 10 | 14 1/.4 | 17 1/2 | 10 1/4 | 14 1/4 | 17 3/4 | 10 1/4 | 14 1/2 | 17 3/4 | 20 3/4 | 10 1/4 | 14 1/2 | 17 3/4 | 20 3/4 | 10 1/4 | 14 1/2 | 18 1/4 | 21 1/4 |
| Conc. | Bottom Slab | $T_2$ | 9 1/4 | 14 3/4 | 18 | 9 1/4 | 15 | 18 1/4 | 9 3/4 | 15 | 18 1/2 | 10 | 15 1/4 | 18 3/4 | 21 1/4 | 10 1/4 | 15 1/4 | 18 3/4 | 21 1/2 | 10 1/2 | 15 1/4 | 19 1/4 | 22 |
| Conc. | Sidewalls | $T_3$ | 6 | 6 | 6 1/2 | 7 | 7 | 7 | 8 | 8 | 8 1/2 | 9 | 9 | 9 | 10 | 9 | 9 | 9 1/2 | 11 | 9 | 10 | 11 | 12 |
| Reinforcing Steel | "a" | Size Bar # | 6 | 4 | 4 | 6 | 4 | 4 | 6 | 4 | 4 | 6 | 4 | 4 | 4 | 6 | 4 | 4 | 4 | 6 | 4 | 4 | 4 |
| Reinforcing Steel | "a" | Spacing | 9 | 11 1/2 | 9 | 9 | 11 1/2 | 9 | 9 | 11 | 8 1/2 | 9 | 11 | 8 1/2 | 9 | 9 | 11 | 8 1/2 | 9 | 9 | 11 | 8 1/2 | 9 |
| Reinforcing Steel | "a" | Length | 26–4 | 26–2 | 26–4 | 26–7 | 26–5 | 26–5 | 26–10 | 26–8 | 26–10 | 27–1 | 26–11 | 26–11 | 27–1 | 27–1 | 26–11 | 27–3 | 27–5 | 27–1 | 27–2 | 27–5 | 27–8 |
| Reinforcing Steel | "b" or "b1" | Size Bar # | 6 | 8 | 8 | 6 | 8 | 8 | 6 | 8 | 8 | 6 | 8 | 8 | 9 | 6 | 8 | 8 | 9 | 6 | 8 | 8 | 9 |
| Reinforcing Steel | "b" or "b1" | Spacing | 9 | 11 1/2 | 9 | 9 | 11 1/2 | 9 | 9 | 11 | 8 1/2 | 9 | 11 | 8 1/2 | 9 | 9 | 11 | 8 1/2 | 9 | 9 | 11 | 8 1/2 | 9 |
| Reinforcing Steel | "b" or "b1" | Length "b" | 25–8 | 25–10 | 26–3 | 25–11 | 26–1 | 26–4 | 26–2 | 26–4 | 26–9 | 26–5 | 26–8 | 26–10 | 27–4 | 26–5 | 26–8 | 27–2 | 27–6 | 26–5 | 26–11 | 27–5 | 27–10 |
| Reinforcing Steel | "b" or "b1" | Length "b1" | 25–6 | 25–10 | 26–3 | 25–9 | 26–2 | 26–4 | 26–1 | 26–5 | 26–9 | 26–4 | 26–8 | 26–11 | 27–4 | 26–4 | 26–8 | 27–2 | 27–7 | 26–4 | 26–11 | 27–5 | 27–11 |
| Reinforcing Steel | "c" | Size Bar # | 5 | 8 | 8 | 5 | 8 | 8 | 5 | 8 | 8 | 5 | 8 | 8 | 9 | 5 | 8 | 8 | 9 | 5 | 8 | 8 | 9 |
| Reinforcing Steel | "c" | Spacing | 9 | 11 1/2 | 9 | 9 | 11 1/2 | 9 | 9 | 11 | 8 1/2 | 9 | 11 | 8 1/2 | 9 | 9 | 11 | 8 1/2 | 9 | 9 | 11 | 8 1/2 | 9 |
| Reinforcing Steel | "c" | Length | 12–6 | 12–6 | 12–7 | 12–7 | 12–7 | 12–7 | 12–8 | 12–8 | 12–9 | 12–9 | 12–9 | 12–9 | 12–10 | 12–9 | 12–9 | 12–10 | 12–11 | 12–9 | 12–10 | 12–11 | 13 |
| Reinforcing Steel | "d" Dist Bars | Top Slab–Tot. No. | 24 | 10 | 10 | 24 | 10 | 10 | 24 | 10 | 10 | 24 | 10 | 10 | 10 | 24 | 10 | 10 | 10 | 24 | 10 | 10 | 10 |
| Reinforcing Steel | "d" Dist Bars | Bottom Slab–Tot. No. | 10 | 10 | 10 | 10 | 10 | 10 | 10 | 10 | 10 | 10 | 10 | 10 | 10 | 10 | 10 | 10 | 10 | 10 | 10 | 10 | 10 |
| Reinforcing Steel | "e" Bars | Size Bar # | 4 | 4 | 5 | 4 | 4 | 5 | 4 | 4 | 5 | 4 | 5 | 7 | 8 | 4 | 7 | 8 | 8 | 6 | 7 | 8 | 9 |
| Reinforcing Steel | "e" Bars | Spacing | 18 | 8 | 8 | 15 | 6 | 6 1/2 | 12 | 5 1/2 | 6 | 9 | 7 1/2 | 8 1/2 | 8 | 8 1/2 | 11 | 8 1/2 | 9 | 12 | 8 | 7 | 7 |
| Reinforcing Steel | Spacers | Number | 52 | | | 55 | | | 68 | | | 68 | | | | 72 | | | | 76 | | | |
| Quan. | Concrete: C.Y. per lin. ft. | | 1.84 | 2.59 | 3.16 | 1.97 | 2.77 | 3.28 | 2.19 | 2.93 | 3.59 | 2.38 | 0.74 | 3.69 | 4.25 | 2.48 | 3.23 | 3.86 | 4.49 | 2.67 | 3.53 | 4.30 | 4.92 |
| Quan. | Reinf :lbs per lin. ft. | | 309 | 317 | 401 | 316 | 330 | 415 | 336 | 363 | 460 | 345 | 374 | 485 | 578 | 351 | 394 | 519 | 582 | 371 | 427 | 567 | 673 |

**NOTE**

For boxes of height less than that shown in table, use next greater table height slabs, wall dimensions and reinforcing steel, and make necessary changes in bar lengths, number of spacers and quantities. Number of "d" bars in table is slab total for both cells.

| Revision | By | Approved | Date |
|---|---|---|---|
| ORIGINAL | | Kercheval | 12/75 |
| Add Metric | T. Stanton | | 03/03 |
| Reviewed | T. Stanton | | 04/06 |
| Edited | T. Stanton | | 02/09 |
| Edited | S.S. T. Regello | | 03/11 |

**SAN DIEGO REGIONAL STANDARD DRAWING**

# DOUBLE BOX CULVERT
# DETAILS No. 1

RECOMMENDED BY THE SAN DIEGO REGIONAL STANDARDS COMMITTEE

Chairperson R.C.E. 19246 Date 7/26/2012

DRAWING NUMBER **D-77F**

| Revision | By | Approved | Date |
|---|---|---|---|
| ORIGINAL | | Kercheval | 12/75 |
| Add Metric | | T. Stanton | 03/03 |
| Reviewed | | T. Stanton | 03/03 |
| Edited | | T. Stanton | 02/09 |
| Edited | S.S. | T. Regello | 03/11 |

**SAN DIEGO REGIONAL STANDARD DRAWING**

# DOUBLE BOX CULVERT
# DETAILS No. 1

SPAN 10' (all measurements in feet and/or inches unless otherwise noted)

| SPAN | | | 10' | | | | | | | | | | | | | | | |
|---|---|---|---|---|---|---|---|---|---|---|---|---|---|---|---|---|---|---|
| HEIGHT | | | 5' | | | 6' | | | 7' | | | 8' | | | | 10' | | |
| STRENGTH CLASSIFICATION | | | A | B | C | A | B | C | A | B | C | A | B | C | D | A | B | C | D |
| MAX FILL OVER TOP | | | 2 | 17 | 30 | 2 | 17 | 30 | 2 | 17 | 30 | 2 | 16 | 29 | 36 | 2 | 16 | 29 | 36 |
| Conc. | Top Slab | $T_1$ | 8 3/4 | 12 3/4 | 16 | 8 3/4 | 12 3/4 | 16 | 8 3/4 | 12 3/4 | 16 | 8 3/4 | 12 3/4 | 16 | 17 1/4 | 8 3/4 | 12 3/4 | 16 | 17 1/2 |
| Conc. | Bottom Slab | $T_2$ | 8 1/4 | 13 1/2 | 16 1/2 | 8 1/4 | 13 1/2 | 16 1/2 | 8 1/4 | 13 3/4 | 16 3/4 | 8 3/4 | 13 1/2 | 16 1/2 | 18 1/4 | 8 3/4 | 13 1/2 | 16 1/2 | 18 1/2 |
| Conc. | Sidewalls | $T_3$ | 6 | 6 | 6 | 6 | 6 | 6 | 6 | 6 1/2 | 7 | 7 | 7 | 7 1/2 | 7 1/2 | 8 | 8 | 9 | 10 |
| Reinforcing Steel | "a" | Size Bar # | 6 | 4 | 4 | 6 | 4 | 4 | 6 | 4 | 4 | 6 | 4 | 4 | 4 | 6 | 4 | 4 | 4 |
| Reinforcing Steel | "a" | Spacing | 11 | 10 | 10 | 11 | 9 1/2 | 10 | 11 | 9 1/2 | 10 | 11 | 10 | 10 | 9 | 11 | 10 | 10 | 9 |
| Reinforcing Steel | "a" | Length | 22–4 | 22–2 | 22–2 | 22–4 | 22–2 | 22–2 | 22–4 | 22–4 | 22–5 | 22–7 | 22–5 | 22–7 | 22–10 | 22–10 | 22–8 | 22–11 | 23–2 |
| Reinforcing Steel | "b" or "$b_1$" | Size Bar # | 6 | 7 | 8 | 6 | 7 | 8 | 6 | 7 | 8 | 6 | 7 | 8 | 8 | 6 | 7 | 8 | 8 |
| Reinforcing Steel | "b" or "$b_1$" | Spacing | 11 | 10 | 10 | 11 | 9 1/2 | 10 | 11 | 9 1/2 | 10 | 11 | 10 | 10 | 9 | 11 | 10 | 10 | 9 |
| Reinforcing Steel | "b" or "$b_1$" | Length "b" | 21–7 | 21–10 | 22 | 21–7 | 21–10 | 22 | 21–7 | 21–11 | 22–3 | 21–10 | 22–1 | 22–4 | 22–9 | 22–1 | 22–4 | 22–9 | 23–1 |
| Reinforcing Steel | "b" or "$b_1$" | Length "$b_1$" | 21–5 | 21–10 | 22 | 21–5 | 21–10 | 22 | 21–5 | 21–11 | 22–3 | 21–9 | 22 | 22–4 | 22–9 | 22 | 22–3 | 22–8 | 23–2 |
| Reinforcing Steel | "c" | Size Bar # | 6 | 7 | 8 | 6 | 7 | 8 | 6 | 7 | 8 | 6 | 7 | 8 | 8 | 6 | 7 | 8 | 8 |
| Reinforcing Steel | "c" | Spacing | 11 | 10 | 10 | 11 | 9 1/2 | 10 | 11 | 9 1/2 | 10 | 11 | 10 | 10 | 9 | 11 | 10 | 10 | 9 |
| Reinforcing Steel | "c" | Length | 10–6 | 10–6 | 10–6 | 10–6 | 10–6 | 10–6 | 10–6 | 10–7 | 10–7 | 10–7 | 10–7 | 10–8 | 10–9 | 10–8 | 10–8 | 10–9 | 10–10 |
| Reinforcing Steel | "d" Dist Bars | Top Slab–Tot. No. | 18 | 10 | 10 | 18 | 10 | 10 | 18 | 10 | 10 | 18 | 10 | 10 | 10 | 18 | 10 | 10 | 10 |
| Reinforcing Steel | "d" Dist Bars | Bottom Slab–Tot. No. | 10 | 10 | 10 | 10 | 10 | 10 | 10 | 10 | 10 | 10 | 10 | 10 | 10 | 10 | 10 | 10 | 10 |
| Reinforcing Steel | "e" Bars | Size Bar # | 4 | 4 | 5 | 4 | 4 | 5 | 4 | 4 | 6 | 4 | 5 | 6 | 7 | 4 | 6 | 6 | 7 |
| Reinforcing Steel | "e" Bars | Spacing | 18 | 10 | 10 | 18 | 6 | 6 1/2 | 14 | 6 | 8 | 11 | 8 1/2 | 6 | 6 | 7 1/2 | 7 | 5 1/2 | 5 |
| Spacers | | Number | 48 | | | 48 | | | 51 | | | 54 | | | 64 | 68 | | | |
| Quan. | Concrete: C.Y. per lin. ft. | | 1.40 | 2.05 | 2.46 | 1.45 | 2.07 | 2.48 | 1.51 | 2.18 | 2.64 | 1.68 | 2.27 | 2.74 | 3.04 | 1.92 | 2.51 | 3.05 | 3.41 |
| Quan. | Reinf :lbs per lin. ft. | | 236 | 254 | 310 | 238 | 274 | 324 | 243 | 280 | 339 | 252 | 278 | 355 | 430 | 279 | 327 | 400 | 476 |

**NOTE**
For boxes of height less than that shown in table, use next greater table height slabs, wall dimensions and reinforcing steel, and make necessary changes in bar lengths, number of spacers and quantities. Number of "d" bars in table is slab total for both cells.

RECOMMENDED BY THE SAN DIEGO REGIONAL STANDARDS COMMITTEE

7/26/2012

Chairperson R.C.E. 19246 Date

DRAWING NUMBER **D-77E**

SPAN 8' (all measurements in feet and/or inches unless otherwise noted)

| SPAN | | | 8' | | | | | | | | | | | | | | | |
|---|---|---|---|---|---|---|---|---|---|---|---|---|---|---|---|---|---|---|
| HEIGHT | | | 4' | | | 5' | | | 6' | | | 7' | | | | 8' | | | |
| STRENGTH CLASSIFICATION | | | A | B | C | A | B | C | A | B | C | A | B | C | D | A | B | C | D |
| MAX FILL OVER TOP | | | 3 | 14 | 25 | 3 | 14 | 25 | 3 | 14 | 25 | 3 | 14 | 25 | 37 | 3 | 14 | 25 | 37 |
| Conc. | Top Slab | $T_1$ | 8 1/2 | 9 1/2 | 12 | 8 1/2 | 9 1/2 | 12 | 8 1/2 | 9 1/2 | 12 | 8 1/2 | 9 1/2 | 12 1/4 | 14 1/4 | 8 1/2 | 9 1/2 | 12 1/4 | 14 1/4 |
| Conc. | Bottom Slab | $T_2$ | 7 1/2 | 10 1/2 | 12 3/4 | 7 1/2 | 10 1/2 | 12 3/4 | 7 1/2 | 10 1/2 | 12 3/4 | 7 1/2 | 10 3/4 | 13 | 15 | 7 1/2 | 10 3/4 | 13 | 15 |
| Conc. | Sidewalls | $T_3$ | 6 | 6 | 6 | 6 | 6 | 6 | 6 | 6 | 6 | 7 | 7 | 7 | 8 | 7 | 7 | 8 | 8 1/2 |
| Reinforcing Steel | "a" | Size Bar # | 6 | 4 | 4 | 6 | 4 | 4 | 6 | 4 | 4 | 6 | 4 | 4 | 4 | 6 | 4 | 4 | 4 |
| Reinforcing Steel | "a" | Spacing | 12 | 9 1/2 | 10 1/2 | 12 | 9 1/2 | 10 | 12 | 9 1/2 | 10 | 11 1/2 | 9 1/2 | 10 | 8 1/2 | 11 1/2 | 9 1/2 | 10 | 8 1/2 |
| Reinforcing Steel | "a" | Length | 18–4 | 18–2 | 18–2 | 18–4 | 18–2 | 18–2 | 18–4 | 18–2 | 18–2 | 18–7 | 18–5 | 18–5 | 18–8 | 18–7 | 18–5 | 18–8 | 18–10 |
| Reinforcing Steel | "b" or "$b_1$" | Size Bar # | 6 | 6 | 7 | 6 | 6 | 7 | 6 | 6 | 7 | 6 | 6 | 7 | 7 | 6 | 6 | 7 | 7 |
| Reinforcing Steel | "b" or "$b_1$" | Spacing | 12 | 9 1/2 | 10 1/2 | 12 | 9 1/2 | 10 | 12 | 9 1/2 | 10 | 11 1/2 | 9 1/2 | 10 | 8 1/2 | 11 1/2 | 9 1/2 | 10 | 8 1/2 |
| Reinforcing Steel | "b" or "$b_1$" | Length "b" | 17–7 | 17–8 | 17–9 | 17–7 | 17–8 | 17–9 | 17–7 | 17–8 | 17–9 | 17–10 | 17–10 | 18 | 18–5 | 17–10 | 17–10 | 18–3 | 18–6 |
| Reinforcing Steel | "b" or "$b_1$" | Length "$b_1$" | 17–5 | 17–8 | 17–9 | 17–5 | 17–8 | 17–9 | 17–5 | 17–8 | 17–9 | 17–10 | 17–10 | 18 | 18–5 | 17–8 | 17–11 | 18 | 18–7 |
| Reinforcing Steel | "c" | Size Bar # | 4 | 6 | 7 | 4 | 6 | 7 | 4 | 6 | 7 | 4 | 6 | 7 | 7 | 4 | 6 | 7 | 7 |
| Reinforcing Steel | "c" | Spacing | 12 | 9 1/2 | 10 1/2 | 12 | 9 1/2 | 10 | 12 | 9 1/2 | 10 | 11 1/2 | 9 1/2 | 10 | 8 1/2 | 11 1/2 | 9 1/2 | 10 | 8 1/2 |
| Reinforcing Steel | "c" | Length | 8–6 | 8–6 | 8–6 | 8–6 | 8–6 | 8–6 | 8–6 | 8–6 | 8–6 | 8–7 | 8–7 | 8–7 | 8–8 | 8–7 | 8–7 | 8–8 | 8–9 |
| Reinforcing Steel | "d" Dist Bars | Top Slab–Tot. No. | 16 | 8 | 8 | 16 | 8 | 8 | 16 | 8 | 8 | 16 | 8 | 8 | 8 | 16 | 8 | 8 | 8 |
| Reinforcing Steel | "d" Dist Bars | Bottom Slab–Tot. No. | 8 | 8 | 8 | 8 | 8 | 8 | 8 | 8 | 8 | 8 | 8 | 8 | 8 | 8 | 8 | 8 | 8 |
| Reinforcing Steel | "e" Bars | Size Bar # | 4 | 4 | 5 | 4 | 4 | 5 | 4 | 5 | 6 | 4 | 5 | 6 | 7 | 4 | 5 | 7 | 7 |
| Reinforcing Steel | "e" Bars | Spacing | 18 | 18 | 10 1/2 | 18 | 12 | 10 | 18 | 11 1/2 | 10 | 14 | 9 1/2 | 7 1/2 | 8 1/2 | 11 1/2 | 8 1/2 | 7 1/2 | 9 |
| Reinforcing Steel | Spacers | Number | 41 | | | 44 | | | 44 | | | 47 | | | 56 | 50 | | 60 | |
| Quan. | Concrete: C.Y. per lin. ft. | | 1.08 | 1.30 | 1.55 | 1.14 | 1.37 | 1.61 | 1.19 | 1.42 | 1.66 | 1.32 | 1.56 | 1.83 | 2.14 | 1.39 | 1.62 | 1.99 | 2.27 |
| Quan. | Reinf :lbs per lin. ft. | | 169 | 175 | 200 | 172 | 181 | 218 | 173 | 188 | 229 | 185 | 199 | 248 | 299 | 191 | 207 | 284 | 314 |

**NOTE**

For boxes of height less than that shown in table, use next greater table height slabs, wall dimensions and reinforcing steel, and make necessary changes in bar lengths, number of spacers and quantities. Number of "d" bars in table is slab total for both cells.

| Revision | By | Approved | Date |
|---|---|---|---|
| ORIGINAL | | Kercheval | 12/75 |
| Add Metric | | T. Stanton | 03/03 |
| Reviewed | | T. Stanton | 04/06 |
| Edited | | T. Stanton | 02/09 |
| Edited | S.S. | T. Regello | 03/11 |

**SAN DIEGO REGIONAL STANDARD DRAWING**

# DOUBLE BOX CULVERT
## DETAILS No. 1

RECOMMENDED BY THE SAN DIEGO REGIONAL STANDARDS COMMITTEE

Chairperson R.C.E. 19246 Date 7/26/2012

DRAWING NUMBER **D-77D**

SPAN 6' (all measurements in feet and/or inches unless otherwise noted)

| SPAN | | | 6' | | | | | | | | | | | | | |
|---|---|---|---|---|---|---|---|---|---|---|---|---|---|---|---|---|
| HEIGHT | | | 3' | | | 4' | | | 5' | | | | 6' | | | |
| STRENGTH CLASSIFICATION | | | A | B | C | A | B | C | A | B | C | D | A | B | C | D |
| MAX FILL OVER TOP | | | 4 | 20 | 34 | 4 | 20 | 34 | 4 | 19 | 33 | 43 | 4 | 19 | 33 | 43 |
| Conc. | Top Slab | $T_1$ | 7 1/4 | 8 1/4 | 10 1/2 | 7 1/4 | 8 1/4 | 10 1/2 | 7 1/4 | 8 1/4 | 10 1/2 | 12 | 7 1/4 | 8 1/4 | 10 1/2 | 12 |
| Conc. | Bottom Slab | $T_2$ | 7 1/4 | 9 1/2 | 11 1/2 | 7 1/4 | 9 1/2 | 11 1/2 | 7 1/4 | 9 1/2 | 11 1/2 | 12 3/4 | 7 1/4 | 9 1/2 | 11 1/2 | 12 3/4 |
| Conc. | Sidewalls | $T_3$ | 6 | 6 | 6 | 6 | 6 | 6 | 6 | 6 | 6 | 6 | 6 | 6 | 6 | 7 1/2 |
| Reinforcing Steel | "a" | Size Bar # | 5 | 4 | 4 | 5 | 4 | 4 | 5 | 4 | 4 | 4 | 5 | 4 | 4 | 4 |
| | | Spacing | 9 1/2 | 11 | 8 1/2 | 9 1/2 | 11 | 8 1/2 | 9 1/2 | 11 | 8 1/2 | 10 1/2 | 9 1/2 | 11 | 8 1/2 | 10 1/2 |
| | | Length | 14-3 | 14-2 | 14-2 | 14-3 | 14-2 | 14-2 | 14-3 | 14-2 | 14-2 | 14-2 | 14-3 | 14-2 | 14-2 | 14-8 |
| | "b" or "$b_1$" | Size Bar # | 5 | 6 | 6 | 5 | 6 | 6 | 5 | 6 | 6 | 7 | 5 | 6 | 6 | 7 |
| | | Spacing | 9 1/2 | 11 | 8 1/2 | 9 1/2 | 11 | 8 1/2 | 9 1/2 | 11 | 8 1/2 | 10 1/2 | 9 1/2 | 11 | 8 1/2 | 10 1/2 |
| | | Length "b" | 13-6 | 13-6 | 13-8 | 13-6 | 13-6 | 13-8 | 13-6 | 13-6 | 13-8 | 13-9 | 13-6 | 13-6 | 13-8 | 14-2 |
| | | Length "$b_1$" | 13-5 | 13-7 | 13-8 | 13-5 | 13-7 | 13-8 | 13-5 | 13-6 | 13-8 | 13-9 | 13-6 | 13-6 | 13-8 | 14-2 |
| | "c" | Size Bar # | 4 | 6 | 6 | 4 | 6 | 6 | 4 | 6 | 6 | 7 | 4 | 6 | 6 | 7 |
| | | Spacing | 9 1/2 | 11 | 8 1/2 | 9 1/2 | 11 | 8 1/2 | 9 1/2 | 11 | 8 1/2 | 10 1/2 | 9 1/2 | 11 | 8 1/2 | 10 1/2 |
| | | Length | 6-6 | 6-6 | 6-6 | 6-6 | 6-6 | 6-6 | 6-6 | 6-6 | 6-6 | 6-6 | 6-6 | 6-6 | 6-6 | 6-8 |
| | "d" Dist Bars | Top Slab-Tot. No. | 12 | 6 | 6 | 12 | 6 | 6 | 12 | 6 | 6 | 6 | 12 | 6 | 6 | 6 |
| | | Bottom Slab-Tot. No. | 6 | 6 | 6 | 6 | 6 | 6 | 6 | 6 | 6 | 6 | 6 | 6 | 6 | 6 |
| | "e" Bars | Size Bar # | 4 | 4 | 4 | 4 | 4 | 4 | 4 | 4 | 5 | 5 | 4 | 5 | 6 | 6 |
| | | Spacing | 18 | 18 | 16 | 18 | 14 | 8 1/2 | 18 | 10 | 9 1/2 | 7 | 18 | 11 | 9 | 6 |
| | Spacers | Number | 30 | | | 33 | | | 36 | | | | 36 | | | |
| Quan. | Concrete: C.Y. per lin. ft. | | 0.77 | 0.90 | 1.08 | 0.82 | 0.96 | 1.13 | 0.88 | 1.01 | 1.19 | 1.30 | 0.93 | 1.07 | 1.25 | 1.47 |
| Quan. | Reinf :lbs per lin. ft. | | 121 | 119 | 147 | 125 | 124 | 155 | 128 | 131 | 164 | 175 | 129 | 137 | 177 | 201 |

## NOTE

For boxes of height less than that shown in table, use next greater table height slabs, wall dimensions and reinforcing steel, and make necessary changes in bar lengths, number of spacers and quantities. Number of "d" bars in table is slab total for both cells.

| Revision | By | Approved | Date |
|---|---|---|---|
| ORIGINAL | | Kercheval | 12/75 |
| Add Metric | | T. Stanton | 03/03 |
| Reviewed | | T. Stanton | 04/06 |
| Edited | | T. Stanton | 02/09 |
| Edited | S.S. | T. Regello | 03/11 |

**SAN DIEGO REGIONAL STANDARD DRAWING**

**DOUBLE BOX CULVERT**

**DETAILS No. 1**

RECOMMENDED BY THE SAN DIEGO REGIONAL STANDARDS COMMITTEE

7/26/2012

Chairperson R.C.E. 19246 Date

DRAWING NUMBER **D-77C**

SPAN 5' (all measurements in feet and/or inches unless otherwise noted)

| SPAN | | | 5' | | | | | | | | | | | | | |
|---|---|---|---|---|---|---|---|---|---|---|---|---|---|---|---|---|
| HEIGHT | | | 2' | | | 3' | | | 4' | | | | 5' | | | |
| STRENGTH CLASSIFICATION | | | A | B | C | A | B | C | A | B | C | D | A | B | C | D |
| MAX FILL OVER TOP | | | 6 | 36 | 36 | 6 | 24 | 36 | 6 | 23 | 34 | 46 | 6 | 23 | 34 | 46 |
| Conc. | Top Slab | $T_1$ | 6 3/4 | 7 3/4 | 9 1/4 | 6 3/4 | 7 3/4 | 9 1/4 | 6 3/4 | 7 3/4 | 9 1/4 | 10 1/4 | 6 3/4 | 7 3/4 | 9 1/4 | 10 1/4 |
| Conc. | Bottom Slab | $T_2$ | 6 1/2 | 8 3/4 | 10 1/4 | 6 1/2 | 8 3/4 | 10 1/4 | 6 1/2 | 8 3/4 | 10 1/4 | 11 1/4 | 6 1/2 | 8 3/4 | 10 1/4 | 11 1/4 |
| Conc. | Sidewalls | $T_3$ | 6 | 6 | 6 | 6 | 6 | 6 | 6 | 6 | 6 | 6 | 6 | 6 | 6 | 6 |
| Reinforcing Steel | "a" | Size Bar # | 5 | 4 | 4 | 5 | 4 | 4 | 5 | 4 | 4 | 4 | 5 | 4 | 4 | 4 |
| Reinforcing Steel | "a" | Spacing | 10 | 8 1/2 | 10 | 10 | 8 1/2 | 10 | 10 | 8 1/2 | 10 | 9 | 10 | 8 1/2 | 10 1/2 | 9 |
| Reinforcing Steel | "a" | Length | 12-3 | 12-2 | 12-2 | 12-3 | 12-2 | 12-2 | 12-3 | 12-2 | 12-2 | 12-2 | 12-3 | 12-2 | 12-2 | 12-2 |
| Reinforcing Steel | "b" or "$b_1$" | Size Bar # | 5 | 5 | 6 | 5 | 5 | 6 | 5 | 5 | 6 | 6 | 5 | 5 | 6 | 6 |
| Reinforcing Steel | "b" or "$b_1$" | Spacing | 10 | 8 1/2 | 10 | 10 | 8 1/2 | 10 | 10 | 8 1/2 | 10 | 9 | 10 | 8 1/2 | 10 1/2 | 9 |
| Reinforcing Steel | "b" or "$b_1$" | Length "b" | 11-5 | 11-6 | 11-7 | 11-5 | 11-6 | 11-7 | 11-5 | 11-6 | 11-7 | 11-8 | 11-5 | 11-6 | 11-7 | 11-8 |
| Reinforcing Steel | "b" or "$b_1$" | Length "$b_1$" | 11-4 | 11-6 | 11-7 | 11-4 | 11-6 | 11-7 | 11-4 | 11-6 | 11-7 | 11-8 | 11-4 | 11-6 | 11-7 | 11-8 |
| Reinforcing Steel | "c" | Size Bar # | 4 | 5 | 6 | 4 | 5 | 6 | 4 | 5 | 6 | 6 | 4 | 5 | 6 | 6 |
| Reinforcing Steel | "c" | Spacing | 10 | 8 1/2 | 10 | 10 | 8 1/2 | 10 | 10 | 8 1/2 | 10 | 9 | 10 | 8 1/2 | 10 1/2 | 9 |
| Reinforcing Steel | "c" | Length | 5-6 | 5-6 | 5-6 | 5-6 | 5-6 | 5-6 | 5-6 | 5-6 | 5-6 | 5-6 | 5-6 | 5-6 | 5-6 | 5-6 |
| Reinforcing Steel | "d" Dist Bars | Top Slab-Tot. No. | 12 | 6 | 6 | 12 | 6 | 6 | 12 | 6 | 6 | 6 | 12 | 6 | 6 | 6 |
| Reinforcing Steel | "d" Dist Bars | Bottom Slab-Tot. No. | 6 | 6 | 6 | 6 | 6 | 6 | 6 | 6 | 6 | 6 | 6 | 6 | 6 | 6 |
| Reinforcing Steel | "e" Bars | Size Bar # | 4 | 4 | 4 | 4 | 4 | 4 | 4 | 4 | 4 | 5 | 4 | 4 | 5 | 6 |
| Reinforcing Steel | "e" Bars | Spacing | 18 | 18 | 18 | 18 | 18 | 16 | 18 | 12 | 10 | 10 1/2 | 18 | 8 1/2 | 9 | 9 |
| Reinforcing Steel | Spacers | Number | 23 | | | 26 | | | 29 | | | | 32 | | | |
| Quan. | Concrete: C.Y. per lin. ft. | | 0.58 | 0.69 | 0.80 | 0.63 | 0.75 | 0.86 | 0.69 | 0.80 | 0.89 | 0.98 | 0.74 | 0.86 | 0.97 | 1.04 |
| Quan. | Reinf :lbs per lin. ft. | | 99 | 100 | 109 | 103 | 104 | 112 | 106 | 109 | 119 | 133 | 109 | 116 | 126 | 148 |

## NOTE

For boxes of height less than that shown in table, use next greater table height slabs, wall dimensions and reinforcing steel, and make necessary changes in bar lengths, number of spacers and quantities. Number of "d" bars in table is slab total for both cells.

| Revision | By | Approved | Date |
|---|---|---|---|
| ORIGINAL | | Kercheval | 12/75 |
| Add Metric | | T. Stanton | 03/03 |
| Reviewed | | T. Stanton | 04/06 |
| Edited | | T. Stanton | 02/09 |
| Edited | S.S. | T. Regello | 03/11 |

**SAN DIEGO REGIONAL STANDARD DRAWING**

**DOUBLE BOX CULVERT**

**DETAILS No. 1**

RECOMMENDED BY THE SAN DIEGO REGIONAL STANDARDS COMMITTEE

Chairperson R.C.E. 19246 Date 7/26/2012

DRAWING NUMBER **D-77B**

SPAN 4' (all measurements in feet and/or inches unless otherwise noted)

| SPAN | | | 4' | | | | | | | | | | |
|---|---|---|---|---|---|---|---|---|---|---|---|---|---|
| HEIGHT | | | 2' | | | 3' | | | | 4' | | | |
| STRENGTH CLASSIFICATION | | | A | B | C | A | B | C | D | A | B | C | D |
| MAX FILL OVER TOP | | | 11 | 21 | 32 | 11 | 23 | 34 | 46 | 11 | 23 | 34 | 46 |
| Conc. | Top Slab | $T_1$ | 6 1/2 | 6 1/2 | 7 1/4 | 6 1/2 | 6 1/2 | 7 1/2 | 8 1/2 | 6 1/2 | 6 1/2 | 7 1/2 | 8 1/2 |
| Conc. | Bottom Slab | $T_2$ | 6 | 7 1/4 | 8 1/2 | 6 | 7 1/2 | 8 1/2 | 9 1/2 | 6 | 7 1/2 | 8 1/2 | 9 1/2 |
| Conc. | Sidewalls | $T_3$ | 6 | 6 | 6 | 6 | 6 | 6 | 6 | 6 | 6 | 6 | 6 |
| Reinforcing Steel | "a" | Size Bar # | 5 | 4 | 4 | 5 | 4 | 4 | 4 | 5 | 4 | 4 | 4 |
| Reinforcing Steel | "a" | Spacing | 11 | 11 | 9 | 11 | 10 1/2 | 8 1/2 | 7 1/2 | 11 | 10 1/2 | 8 1/2 | 7 1/2 |
| Reinforcing Steel | "a" | Length | 10–3 | 10–2 | 10–2 | 10–3 | 10–2 | 10–2 | 10–2 | 10–3 | 10–2 | 10–2 | 10–2 |
| Reinforcing Steel | "b" or "$b_1$" | Size Bar # | 5 | 5 | 5 | 5 | 5 | 5 | 5 | 5 | 5 | 5 | 5 |
| Reinforcing Steel | "b" or "$b_1$" | Spacing | 11 | 11 | 9 | 11 | 10 1/2 | 8 1/2 | 7 1/2 | 11 | 10 1/2 | 8 1/2 | 7 1/2 |
| Reinforcing Steel | "b" or "$b_1$" | Length "b" | 9–4 | 9–4 | 9–6 | 9–4 | 9–4 | 9–6 | 9–7 | 9–4 | 9–4 | 9–6 | 9–7 |
| Reinforcing Steel | "b" or "$b_1$" | Length "$b_1$" | 9–4 | 9–5 | 9–6 | 9–4 | 9–4 | 9–6 | 9–7 | 9–4 | 9–4 | 9–6 | 9–7 |
| Reinforcing Steel | "c" | Size Bar # | 4 | 5 | 5 | 4 | 5 | 5 | 5 | 4 | 5 | 5 | 5 |
| Reinforcing Steel | "c" | Spacing | 11 | 11 | 9 | 11 | 10 1/2 | 8 1/2 | 7 1/2 | 11 | 10 1/2 | 8 1/2 | 7 1/2 |
| Reinforcing Steel | "c" | Length | 4–6 | 4–6 | 4–6 | 4–6 | 4–6 | 4–6 | 4–6 | 4–6 | 4–6 | 4–6 | 4–6 |
| Reinforcing Steel | "d" Dist Bars | Top Slab–Tot. No. | 10 | 6 | 6 | 10 | 6 | 6 | 6 | 10 | 6 | 6 | 6 |
| Reinforcing Steel | "d" Dist Bars | Bottom Slab–Tot. No. | 6 | 6 | 6 | 6 | 6 | 6 | 6 | 6 | 6 | 6 | 6 |
| Reinforcing Steel | "e" Bars | Size Bar # | 4 | 4 | 4 | 4 | 4 | 4 | 4 | 4 | 4 | 4 | 5 |
| Reinforcing Steel | "e" Bars | Spacing | 18 | 18 | 18 | 18 | 18 | 16 | 12 | 18 | 12 | 9 | 10 |
| Reinforcing Steel | Spacers | Number | 23 | | | 26 | | | | 29 | | | |
| Quan. | Concrete: C.Y. per lin. ft. | | 0.47 | 0.51 | 0.57 | 0.53 | 0.57 | 0.63 | 0.69 | 0.59 | 0.63 | 0.69 | 0.75 |
| Quan. | Reinf. lbs per lin. ft. | | 81 | 74 | 84 | 84 | 79 | 91 | 101 | 87 | 85 | 99 | 111 |

**NOTE**

For boxes of height less than that shown in table, use next greater table height slabs, wall dimensions and reinforcing steel, and make necessary changes in bar lengths, number of spacers and quantities. Number of "d" bars in table is slab total for both cells.

| Revision | By | Approved | Date |
|---|---|---|---|
| ORIGINAL | | Kercheval | 12/75 |
| Add Metric | | T. Stanton | 03/03 |
| Reviewed | T. Stanton | | 04/06 |
| Edited | T. Stanton | | 02/09 |
| Edited | S.S. T. Regello | | 03/11 |

**SAN DIEGO REGIONAL STANDARD DRAWING**

**DOUBLE BOX CULVERT**

**DETAILS No. 1**

RECOMMENDED BY THE SAN DIEGO REGIONAL STANDARDS COMMITTEE

Chairperson R.C.E. 19246 Date 7/26/2012

DRAWING NUMBER **D-77A**

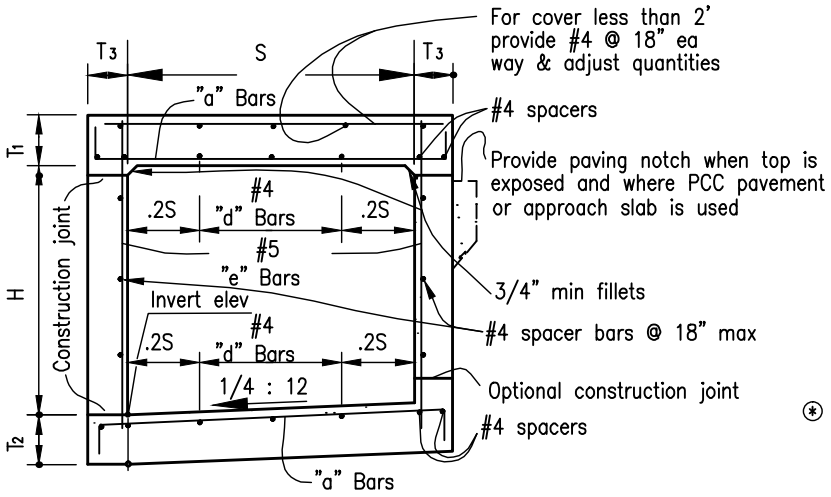


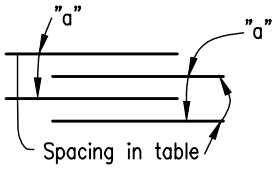


DETAIL "A"

⊛ For reinforcement clearance, except at bottom, see "Miscellaneous Details," on D-81A and D-81B

TYPICAL SECTIONS 2' THRU 6' SPANS

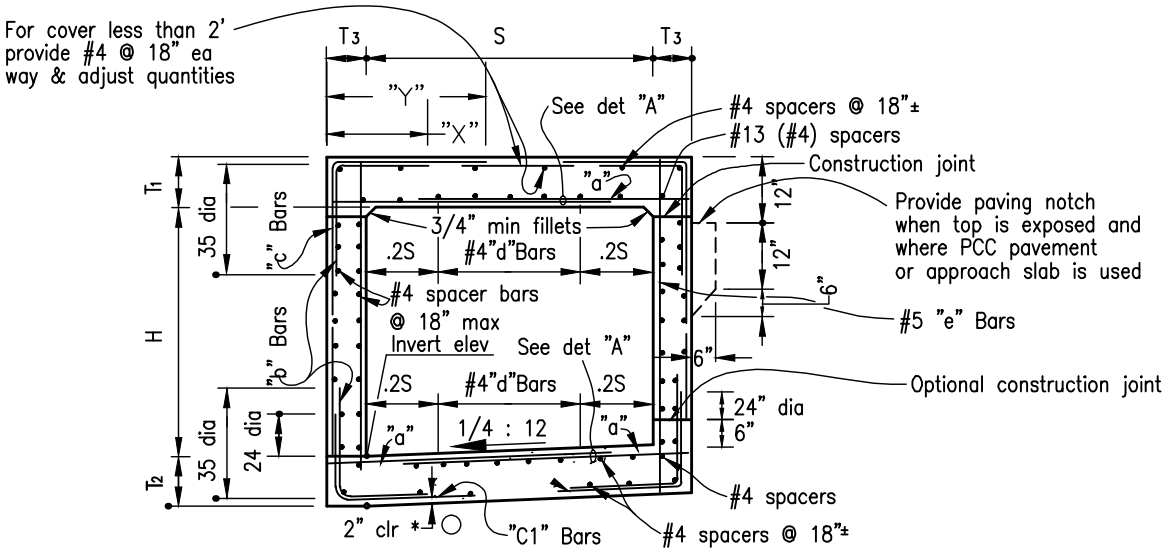


TYPICAL SECTIONS 7' THRU 12' SPANS

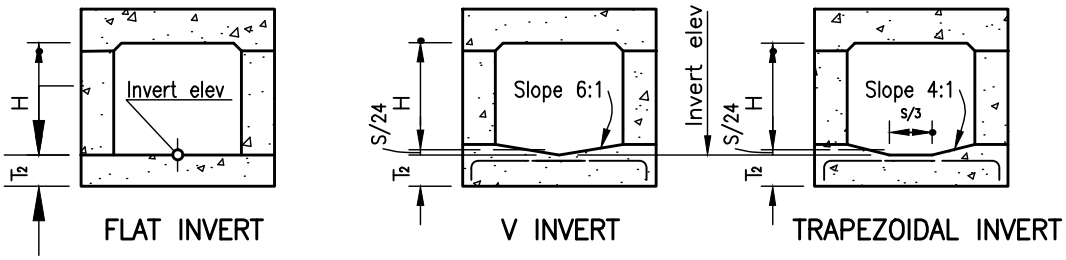


FLAT INVERT

V INVERT

TRAPEZOIDAL INVERT

ALTERNATIVE INVERTS

(When specified)

| Revision | By | Approved | Date |
|---|---|---|---|
| ORIGINAL | | Kercheval | 12/75 |
| Add Metric | | T Stanton | 03/03 |
| Reviewed | | T Stanton | 04/06 |
| Edited | S.S. | T. Regello | 03/11 |
| | | | |

**SAN DIEGO REGIONAL STANDARD DRAWING**

# SINGLE BOX CULVERT DETAILS NO.2

RECOMMENDED BY THE SAN DIEGO REGIONAL STANDARDS COMMITTEE

T Stanton 7/26/2012

Chairperson R.C.E. 19246 Date

DRAWING NUMBER **D-76G**

SPAN 12' (all measurements in feet and/or inches unless otherwise noted)

| SPAN | | | 12' | | | | | | | | | | | | | | |
|---|---|---|---|---|---|---|---|---|---|---|---|---|---|---|---|---|---|
| HEIGHT | | | 6' | | 7' | | 8' | | 9' | | | 10' | | | 12' | | |
| STRENGTH CLASSIFICATION | | | A | B | A | B | A | B | A | B | C | A | B | C | A | B | C |
| MAX FILL OVER TOP | | | 5 | 16 | 5 | 16 | 5 | 16 | 5 | 16 | 24 | 5 | 16 | 24 | 5 | 16 | 24 |
| CONC. | Top Slab | $T_1$ | 8 3/4 | 11 1/4 | 8 3/4 | 11 1/4 | 8 3/4 | 11 1/4 | 9 | 11 1/4 | 13 1/4 | 9 | 11 1/4 | 13 1/4 | 9 | 11 1/4 | 13 1/4 |
| CONC. | Bottom Slab | $T_2$ | 8 3/4 | 12 1/4 | 8 3/4 | 12 1/4 | 8 3/4 | 12 1/4 | 9 | 12 1/4 | 14 3/4 | 9 | 12 1/4 | 14 3/4 | 9 | 12 1/4 | 14 3/4 |
| CONC. | Sidewalls | $T_3$ | 7 1/2 | 10 1/2 | 7 1/2 | 10 1/2 | 7 1/2 | 10 1/2 | 8 | 10 1/2 | 12 1/2 | 9 | 10 1/2 | 12 1/2 | 9 | 10 1/2 | 12 1/2 |
| Reinforcing Steel | "a" | Size Bar " | 6 | 7 | 6 | 7 | 6 | 7 | 6 | 7 | 7 | 6 | 7 | 7 | 6 | 7 | 7 |
| Reinforcing Steel | "a" | Spacing | 11 | 10 | 11 | 10 | 11 | 10 | 11 | 10 | 8 | 11 | 10 | 8 | 11 | 10 | 8 |
| Reinforcing Steel | "a" | Length | 11–3 | 11–6 | 11–3 | 11–6 | 11–3 | 11–6 | 11–4 | 11–6 | 11–8 | 11–5 | 11–6 | 11–8 | 11–5 | 11–6 | 11–8 |
| Reinforcing Steel | "b" | Size Bar " | 6 | 7 | 6 | 7 | 6 | 7 | 6 | 7 | 7 | 6 | 7 | 7 | 6 | 7 | 7 |
| Reinforcing Steel | "b" | Spacing | 11 | 10 | 11 | 10 | 11 | 10 | 11 | 10 | 8 | 11 | 10 | 8 | 11 | 10 | 8 |
| Reinforcing Steel | "b" | Dimension "X" | 2–8 | 3 | 2–8 | 3 | 2–8 | 3 | 2–8 | 3 | 3 | 2–8 | 3 | 3 | 2–8 | 3 | 3 |
| Reinforcing Steel | "b" | Length | 4–10 | 5–7 | 4–10 | 5–7 | 4–10 | 5–7 | 4–10 | 5–7 | 5–7 | 4–10 | 5–7 | 5–7 | 4–10 | 5–7 | 5–7 |
| Reinforcing Steel | "c" | Size Bar " | 6 | 7 | 6 | 7 | 6 | 7 | 6 | 7 | 7 | 6 | 7 | 7 | 6 | 7 | 7 |
| Reinforcing Steel | "c" | Spacing | 11 | 10 | 11 | 10 | 11 | 10 | 11 | 10 | 8 | 11 | 10 | 8 | 11 | 10 | 8 |
| Reinforcing Steel | "c" | Dimension "Y" | 3–9 | 3–9 | 3–9 | 3–9 | 3–9 | 3–9 | 3–9 | 3–9 | 3–9 | 3–9 | 3–9 | 3–9 | 3–9 | 3–9 | 3–9 |
| Reinforcing Steel | "c" | Length | 10–2 | 10–4 | 11–2 | 11–4 | 12–2 | 12–4 | 13–2 | 13–4 | 13–6 | 14–2 | 14–4 | 14–6 | 16–2 | 16–4 | 16–6 |
| Reinforcing Steel | "$c_1$" | Size Bar " | 6 | 7 | 6 | 7 | 6 | 7 | 6 | 7 | 7 | 6 | 7 | 7 | 6 | 7 | 7 |
| Reinforcing Steel | "$c_1$" | Spacing | 11 | 10 | 11 | 10 | 11 | 10 | 11 | 10 | 8 | 11 | 10 | 8 | 11 | 10 | 8 |
| Reinforcing Steel | "$c_1$" | Dimension "Y" | 3–9 | 3–9 | 3–9 | 3–9 | 3–9 | 3–9 | 3–9 | 3–9 | 3–9 | 3–9 | 3–9 | 3–9 | 3–9 | 3–9 | 3–9 |
| Reinforcing Steel | "$c_1$" | Length | 5–11 | 6–5 | 5–11 | 6–5 | 5–11 | 6–6 | 5–11 | 6–6 | 6–8 | 5–11 | 6–6 | 6–8 | 5–11 | 6–6 | 6–8 |
| Reinforcing Steel | "d" Bars | Top Slab–No. of | 10 | 6 | 10 | 6 | 10 | 6 | 10 | 6 | 6 | 10 | 6 | 6 | 10 | 6 | 6 |
| Reinforcing Steel | "d" Bars | Bottom Slab–No. of | 6 | 6 | 6 | 6 | 6 | 6 | 6 | 6 | 6 | 6 | 6 | 6 | 6 | 6 | 6 |
| Reinforcing Steel | "e" Bars | Spacing | 18 | 18 | 18 | 18 | 18 | 18 | 18 | 18 | 18 | 18 | 18 | 18 | 18 | 18 | 18 |
| Reinforcing Steel | Spacers | Total Number | 36 | | 44 | | 44 | | 44 | | | 48 | | | 52 | | |
| QUAN. | Concrete: C.Y. per lin. ft. | | 99 | 138 | 103 | 144 | 108 | 152 | 118 | 158 | 190 | 130 | 165 | 198 | 141 | 178 | 213 |
| QUAN. | Reinf lbs per lin. ft. | | 203 | 293 | 213 | 304 | 218 | 311 | 223 | 317 | 387 | 231 | 326 | 397 | 243 | 341 | 415 |

**NOTE**

For boxes of height less than that shown in table, use next greater table height slabs, wall dimensions and reinforcing steel, and make necessary changes in bar lengths, number of spacers and quantities.

| Revision | By | Approved | Date |
|---|---|---|---|
| ORIGINAL | | A.Kercheval | 12/75 |
| Add Metric | | T. Stanton | 03/03 |
| Reviewed | | T. Stanton | 04/06 |
| Edited | | T. Stanton | 02/09 |
| Edited | S.S. | T. Regello | 03/11 |

**SAN DIEGO REGIONAL STANDARD DRAWING**

**SINGLE BOX CULVERT**

**DETAILS No.1**

RECOMMENDED BY THE SAN DIEGO REGIONAL STANDARDS COMMITTEE

Chairperson R.C.E. 19246 Date 7/26/2012

DRAWING NUMBER **D-76F**

SPAN 10' (all measurements in feet and/or inches unless otherwise noted)

| SPAN | | | 10' | | | | | | | | | | | | | | | | |
|---|---|---|---|---|---|---|---|---|---|---|---|---|---|---|---|---|---|---|---|
| HEIGHT | | | 4' | | 5' | | 6' | | 7' | | 8' | | | 9' | | | 10' | | |
| STRENGTH CLASSIFICATION | | | A | B | A | B | A | B | A | B | A | B | C | A | B | C | A | B | C |
| MAX FILL OVER TOP | | | 9 | 18 | 9 | 18 | 9 | 18 | 9 | 18 | 8 | 18 | 28 | 8 | 18 | 28 | 8 | 18 | 28 |
| CONC. | Top Slab | $T_1$ | 8 | 9 1/2 | 8 1/4 | 9 3/4 | 8 1/4 | 9 3/4 | 8 1/2 | 9 3/4 | 8 1/2 | 9 3/4 | 12 1/4 | 8 1/2 | 9 3/4 | 12 1/4 | 8 1/2 | 9 3/4 | 12 1/4 |
| CONC. | Bottom Slab | $T_2$ | 8 3/4 | 10 1/2 | 9 | 10 3/4 | 9 | 10 3/4 | 9 1/4 | 11 | 9 1/4 | 11 | 13 1/4 | 9 1/4 | 11 | 13 1/4 | 9 1/4 | 11 | 13 1/4 |
| CONC. | Sidewalls | $T_3$ | 7 1/4 | 9 1/2 | 7 1/4 | 9 1/2 | 7 1/4 | 9 1/2 | 7 1/4 | 9 1/2 | 7 1/4 | 9 1/2 | 11 1/2 | 8 | 9 1/2 | 11 1/2 | 9 | 9 1/2 | 11 1/2 |
| Reinforcing Steel | "a" | Size Bar " | 6 | 6 | 6 | 6 | 6 | 6 | 6 | 6 | 6 | 6 | 7 | 6 | 6 | 7 | 6 | 6 | 7 |
| Reinforcing Steel | "a" | Spacing | 11 | 8 | 11 | 8 | 11 | 8 | 11 | 8 | 11 | 8 | 9 | 11 | 8 | 9 | 11 | 8 | 9 |
| Reinforcing Steel | "a" | Length | 9–5 | 9–8 | 9–5 | 9–8 | 9–5 | 9–8 | 9–5 | 9–8 | 9–5 | 9–8 | 9–9 | 9–6 | 9–8 | 9–9 | 9–5 | 9–8 | 9–9 |
| Reinforcing Steel | "b" | Size Bar " | 5 | 6 | 5 | 6 | 5 | 6 | 5 | 6 | 5 | 6 | 6 | 5 | 6 | 6 | 5 | 6 | 6 |
| Reinforcing Steel | "b" | Spacing | 11 | 8 | 11 | 8 | 11 | 8 | 11 | 8 | 11 | 8 | 9 | 11 | 8 | 9 | 11 | 8 | 9 |
| Reinforcing Steel | "b" | Dimension "X" | 2 | 2 | 2 | 2 | 2 | 2 | 2 | 2 | 2 | 2 | 2–6 | 2 | 2 | 2–6 | 2 | 2 | 2–6 |
| Reinforcing Steel | "b" | Length | 3–10 | 4–2 | 3–10 | 4–2 | 3–10 | 4–2 | 3–10 | 4–2 | 3–10 | 4–2 | 4–8 | 3–10 | 4–2 | 4–8 | 3–10 | 4–2 | 4–8 |
| Reinforcing Steel | "c" | Size Bar " | 5 | 6 | 5 | 6 | 5 | 6 | 5 | 6 | 5 | 6 | 6 | 5 | 6 | 6 | 5 | 6 | 6 |
| Reinforcing Steel | "c" | Spacing | 11 | 8 | 11 | 8 | 11 | 8 | 11 | 8 | 11 | 8 | 9 | 11 | 8 | 9 | 11 | 8 | 9 |
| Reinforcing Steel | "c" | Dimension "Y" | 2–8 | 3–4 | 2–8 | 3–4 | 2–8 | 3–4 | 2–8 | 3–4 | 2–8 | 3–4 | 3–6 | 2–8 | 3–4 | 3–6 | 2–8 | 3–4 | 3–6 |
| Reinforcing Steel | "c" | Length | 6–11 | 7–10 | 8–1 | 8–10 | 9–1 | 9–10 | 10–1 | 10–10 | 11–1 | 11–10 | 12–3 | 12–1 | 12–10 | 13–3 | 13–1 | 13–10 | 14–3 |
| Reinforcing Steel | "$c_1$" | Size Bar " | 5 | 6 | 5 | 6 | 5 | 6 | 5 | 6 | 5 | 6 | 6 | 5 | 6 | 6 | 5 | 6 | 6 |
| Reinforcing Steel | "$c_1$" | Spacing | 11 | 8 | 11 | 8 | 11 | 8 | 11 | 8 | 11 | 8 | 9 | 11 | 8 | 9 | 11 | 8 | 9 |
| Reinforcing Steel | "$c_1$" | Dimension "Y" | 2–8 | 3–4 | 2–8 | 3–4 | 2–8 | 3–4 | 2–8 | 3–4 | 2–8 | 3–4 | 3–6 | 2–8 | 3–4 | 3–6 | 2–8 | 3–4 | 3–6 |
| Reinforcing Steel | "$c_1$" | Length | 4–7 | 5–8 | 4–7 | 5–8 | 4–7 | 5–8 | 4–7 | 5–8 | 4–7 | 5–8 | 6 | 4–7 | 5–8 | 6 | 4–7 | 5–8 | 6–2 |
| Reinforcing Steel | "d" Bars | Top Slab–No. of | 9 | 5 | 9 | 5 | 9 | 5 | 9 | 5 | 9 | 5 | 5 | 9 | 5 | 5 | 9 | 5 | 5 |
| Reinforcing Steel | "d" Bars | Bottom Slab–No. of | 5 | 5 | 5 | 5 | 5 | 5 | 5 | 5 | 5 | 5 | 5 | 5 | 5 | 5 | 5 | 5 | 5 |
| Reinforcing Steel | "e" Bars | Spacing | 18 | 18 | 18 | 18 | 18 | 18 | 18 | 18 | 18 | 18 | 18 | 18 | 18 | 18 | 18 | 18 | 18 |
| Reinforcing Steel | Spacers | Total Number | 32 | | 34 | | 36 | | 40 | | 40 | | | 44 | | | 48 | | |
| QUAN. | Concrete: C.Y. per lin. ft. | | 75 | 94 | 82 | 108 | 86 | 108 | 92 | 115 | 97 | 121 | 150 | 106 | 126 | 157 | 118 | 132 | 165 |
| QUAN. | Reinf lbs per lin. ft. | | 143 | 221 | 148 | 228 | 154 | 235 | 160 | 244 | 164 | 250 | 265 | 170 | 259 | 273 | 178 | 267 | 281 |

**NOTE**
For boxes of height less than that shown in table, use next greater table height slabs, wall dimensions and reinforcing steel, and make necessary changes in bar lengths, number of spacers and quantities.

| Revision | By | Approved | Date |
|---|---|---|---|
| ORIGINAL | | A.Kercheval | 12/75 |
| Add Metric | | T. Stanton | 03/03 |
| Reviewed | | T. Stanton | 04/06 |
| Edited | | T. Stanton | 02/09 |
| Edited | S.S. | T. Regello | 03/11 |

**SAN DIEGO REGIONAL STANDARD DRAWING**

**SINGLE BOX CULVERT**
**DETAILS No.1**

RECOMMENDED BY THE SAN DIEGO REGIONAL STANDARDS COMMITTEE

Chairperson R.C.E. 19246 Date 7/26/2012

DRAWING NUMBER **D-76E**

SPAN 8' (all measurements in feet and/or inches unless otherwise noted)

| SPAN | | | 8' | | | | | | | | | | | | | | |
|---|---|---|---|---|---|---|---|---|---|---|---|---|---|---|---|---|---|
| HEIGHT | | | 3' | | 4' | | 5' | | 6' | | | 7' | | | 8' | | |
| STRENGTH CLASSIFICATION | | | A | B | A | B | A | B | A | B | C | A | B | C | A | B | C |
| MAX FILL OVER TOP | | | 13 | 21 | 13 | 21 | 13 | 21 | 13 | 21 | 31 | 13 | 21 | 31 | 13 | 21 | 31 |
| CONC. | Top Slab | $T_1$ | 7 1/4 | 8 1/2 | 7 1/4 | 8 1/2 | 7 1/4 | 8 1/2 | 7 1/4 | 8 1/2 | 10 1/4 | 7 1/4 | 8 1/2 | 10 1/4 | 7 1/4 | 8 1/2 | 10 1/4 |
| CONC. | Bottom Slab | $T_2$ | 7 1/4 | 9 1/2 | 7 1/4 | 9 1/2 | 7 1/4 | 9 1/2 | 7 1/4 | 9 1/2 | 11 1/2 | 7 1/4 | 9 1/2 | 11 1/2 | 7 1/4 | 9 1/2 | 11 1/2 |
| CONC. | Sidewalls | $T_3$ | 6 1/2 | 7 1/2 | 6 1/2 | 7 1/2 | 6 1/2 | 7 1/2 | 6 1/2 | 7 1/2 | 9 3/4 | 6 1/2 | 7 1/2 | 9 3/4 | 6 1/2 | 7 1/2 | 9 3/4 |
| Reinforcing Steel | "a" | Size Bar " | 5 | 5 | 5 | 5 | 5 | 5 | 5 | 5 | 6 | 5 | 5 | 6 | 5 | 5 | 6 |
| Reinforcing Steel | "a" | Spacing | 9 | 7 | 9 | 7 | 9 | 7 | 9 | 7 | 8 | 9 | 7 | 8 | 9 | 7 | 8 |
| Reinforcing Steel | "a" | Length | 7–7 | 7–8 | 7–7 | 7–8 | 7–7 | 7–8 | 7–7 | 7–8 | 7–10 | 7–7 | 7–8 | 7–10 | 7–7 | 7–8 | 7–10 |
| Reinforcing Steel | "b" | Size Bar " | 5 | 5 | 5 | 5 | 5 | 5 | 5 | 5 | 6 | 5 | 5 | 6 | 5 | 5 | 6 |
| Reinforcing Steel | "b" | Spacing | 9 | 7 | 9 | 7 | 9 | 7 | 9 | 7 | 8 | 9 | 7 | 8 | 9 | 7 | 8 |
| Reinforcing Steel | "b" | Dimension "X" | 1–6 | 1–7 | 1–6 | 1–7 | 1–6 | 1–7 | 1–6 | 1–7 | 1–8 | 1–6 | 1–7 | 1–8 | 1–6 | 1–7 | 1–8 |
| Reinforcing Steel | "b" | Length | 3–4 | 3–5 | 3–4 | 3–5 | 3–4 | 3–5 | 3–4 | 3–5 | 3–10 | 3–4 | 3–5 | 3–10 | 3–4 | 3–5 | 3–10 |
| Reinforcing Steel | "c" | Size Bar " | 5 | 5 | 5 | 5 | 5 | 5 | 5 | 5 | 6 | 5 | 5 | 6 | 5 | 5 | 6 |
| Reinforcing Steel | "c" | Spacing | 9 | 7 | 9 | 7 | 9 | 7 | 9 | 7 | 8 | 9 | 7 | 8 | 9 | 7 | 8 |
| Reinforcing Steel | "c" | Dimension "Y" | 2 | 2–5 | 2 | 2–5 | 2 | 2–5 | 2 | 2–5 | 2–8 | 2 | 2–5 | 2–8 | 2 | 2–5 | 2–8 |
| Reinforcing Steel | "c" | Length | 3–4 | 3–10 | 6–4 | 6–10 | 7–4 | 7–10 | 8–4 | 8–10 | 9–3 | 9–4 | 9–10 | 10–3 | 10–4 | 10–10 | 11–3 |
| Reinforcing Steel | "$c_1$" | Size Bar " | 5 | 5 | 5 | 5 | 5 | 5 | 5 | 5 | 6 | 5 | 5 | 6 | 5 | 5 | 6 |
| Reinforcing Steel | "$c_1$" | Spacing | 9 | 7 | 9 | 7 | 9 | 7 | 9 | 7 | 8 | 9 | 7 | 8 | 9 | 7 | 8 |
| Reinforcing Steel | "$c_1$" | Dimension "Y" | 2 | 2–5 | 2 | 2–5 | 2 | 2–5 | 2 | 2–5 | 2–8 | 2 | 2–3 | 2–8 | 2 | 2–5 | 2–8 |
| Reinforcing Steel | "$c_1$" | Length | 3–9 | 4–5 | 3–9 | 4–5 | 3–9 | 4–5 | 3–9 | 4–5 | 5 | 3–9 | 4–5 | 5 | 3–9 | 4–5 | 5 |
| Reinforcing Steel | "d" Bars | Top Slab–No. of | 7 | 5 | 7 | 5 | 7 | 5 | 7 | 5 | 5 | 7 | 5 | 5 | 7 | 5 | 5 |
| Reinforcing Steel | "d" Bars | Bottom Slab–No. of | 5 | 5 | 5 | 5 | 5 | 5 | 5 | 5 | 5 | 5 | 5 | 5 | 5 | 5 | 5 |
| Reinforcing Steel | "e" Bars | Spacing | 18 | 18 | 18 | 18 | 18 | 18 | 18 | 18 | 18 | 18 | 18 | 18 | 18 | 18 | 18 |
| Reinforcing Steel | Spacers | Total Number | 28 | | 32 | | 32 | | 36 | | | 40 | | | 40 | | |
| QUAN. | Concrete: C.Y. per lin. ft. | | 52 | 65 | 56 | 70 | 60 | 74 | 65 | 79 | 100 | 69 | 83 | 106 | 73 | 88 | 112 |
| QUAN. | Reinf lbs per lin. ft. | | 118 | 146 | 125 | 154 | 129 | 139 | 136 | 167 | 211 | 143 | 174 | 220 | 147 | 179 | 225 |

**NOTE**

For boxes of height less than that shown in table, use next greater table height slabs, wall dimensions and reinforcing steel, and make necessary changes in bar lengths, number of spacers and quantities.

| Revision | By | Approved | Date |
|---|---|---|---|
| ORIGINAL | | A.Kercheval | 12/75 |
| Add Metric | | T. Stanton | 03/03 |
| Reviewed | | T. Stanton | 04/06 |
| Edited | | T. Stanton | 02/09 |
| Edited | S.S. | T. Regello | 03/11 |

**SAN DIEGO REGIONAL STANDARD DRAWING**

**SINGLE BOX CULVERT**

**DETAILS No.1**

RECOMMENDED BY THE SAN DIEGO REGIONAL STANDARDS COMMITTEE

Chairperson R.C.E. 19246 Date 7/26/2012

DRAWING NUMBER **D-76D**

SPAN 7' (all measurements in feet and/or inches unless otherwise noted)

| SPAN | | | 7' | | | | | | | | | | | | |
|---|---|---|---|---|---|---|---|---|---|---|---|---|---|---|---|
| HEIGHT | | | 3' | | 4' | | 5' | | | 6' | | | 7' | | |
| STRENGTH CLASSIFICATION | | | A | B | A | B | A | B | C | A | B | C | A | B | C |
| MAX FILL OVER TOP | | | 16 | 26 | 16 | 26 | 16 | 26 | 35 | 16 | 26 | 35 | 16 | 26 | 35 |
| CONC. | Top Slab | $T_1$ | 7 1/4 | 8 1/4 | 7 1/4 | 8 1/4 | 7 1/4 | 8 1/4 | 9 3/4 | 7 1/4 | 8 1/4 | 9 3/4 | 7 1/4 | 8 1/4 | 9 3/4 |
| CONC. | Bottom Slab | $T_2$ | 7 1/2 | 8 3/4 | 7 1/2 | 8 3/4 | 7 1/2 | 8 3/4 | 10 1/2 | 7 1/2 | 8 3/4 | 10 1/2 | 7 1/2 | 8 3/4 | 10 1/2 |
| CONC. | Sidewalls | $T_3$ | 6 | 7 | 6 | 7 | 6 | 7 | 8 1/2 | 6 | 7 | 8 1/2 | 6 | 7 | 8 1/2 |
| Reinforcing Steel | "a" | Size Bar " | 5 | 5 | 5 | 5 | 5 | 5 | 6 | 5 | 5 | 6 | 5 | 5 | 6 |
| | | Spacing | 9 | 7 | 9 | 7 | 9 | 7 | 9 | 9 | 7 | 9 | 9 | 7 | 9 |
| | | Length | 6–8 | 6–9 | 6–8 | 6–9 | 6–8 | 6–9 | 6–10 | 6–8 | 6–9 | 6–10 | 6–8 | 6–9 | 6–10 |
| | "b" | Size Bar " | 5 | 5 | 5 | 5 | 5 | 5 | 6 | 5 | 5 | 6 | 5 | 5 | 6 |
| | | Spacing | 9 | 7 | 9 | 7 | 9 | 7 | 9 | 9 | 7 | 9 | 9 | 7 | 9 |
| | | Dimension "X" | 1–3 | 1–4 | 1–3 | 1–4 | 1–3 | 1–4 | 1–8 | 1–3 | 1–4 | 1–8 | 1–3 | 1–4 | 1–8 |
| | | Length | 3–1 | 3–2 | 3–1 | 3–2 | 3–1 | 3–2 | 3–10 | 3–1 | 3–2 | 3–10 | 3–1 | 3–2 | 3–10 |
| | "c" | Size Bar " | 5 | 5 | 5 | 5 | 5 | 5 | 6 | 5 | 5 | 6 | 5 | 5 | 6 |
| | | Spacing | 9 | 7 | 9 | 7 | 9 | 7 | 9 | 9 | 7 | 9 | 9 | 7 | 9 |
| | | Dimension "Y" | 1–10 | 1–11 | 1–10 | 1–11 | 1–10 | 1–11 | 2–3 | 1–10 | 1–11 | 2–3 | 1–10 | 1–11 | 2–3 |
| | | Length | 5–2 | 5–4 | 6–2 | 6–4 | 7–2 | 7–4 | 7–10 | 8–2 | 8–4 | 8–10 | 9–2 | 9–4 | 9–10 |
| | "$c_1$" | Size Bar " | 5 | 5 | 5 | 5 | 5 | 5 | 6 | 5 | 5 | 6 | 5 | 5 | 6 |
| | | Spacing | 9 | 7 | 9 | 7 | 9 | 7 | 9 | 9 | 7 | 9 | 9 | 7 | 9 |
| | | Dimension "Y" | 1–10 | 1–11 | 1–10 | 1–11 | 1–10 | 1–11 | 2–3 | 1–10 | 1–11 | 2–3 | 1–10 | 1–11 | 2–3 |
| | | Length | 3–8 | 3–10 | 3–8 | 3–10 | 3–8 | 3–10 | 4–6 | 3–8 | 3–10 | 4–6 | 3–8 | 3–10 | 4–6 |
| | "d" Bars | Top Slab–No. of | 7 | 4 | 7 | 4 | 7 | 4 | 4 | 7 | 4 | 4 | 7 | 4 | 4 |
| | | Bottom Slab–No. of | 4 | 4 | 4 | 4 | 4 | 4 | 4 | 4 | 4 | 4 | 4 | 4 | 4 |
| | "e" Bars | Spacing | 18 | 18 | 18 | 18 | 18 | 18 | 18 | 18 | 18 | 18 | 18 | 18 | 18 |
| | Spacers | Total Number | 24 | | 28 | | 28 | | | 32 | | | 36 | | |
| QUAN. | Concrete: C.Y. per lin. ft. | | 47 | 56 | 51 | 60 | 55 | 64 | 78 | 58 | 68 | 84 | 62 | 73 | 89 |
| QUAN. | Reinf lbs per lin. ft. | | 107 | 130 | 114 | 138 | 118 | 143 | 168 | 125 | 150 | 176 | 132 | 158 | 184 |

**NOTE**

For boxes of height less than that shown in table, use next greater table height slabs, wall dimensions and reinforcing steel, and make necessary changes in bar lengths, number of spacers and quantities.

| Revision | By | Approved | Date |
|---|---|---|---|
| ORIGINAL | | A.Kercheval | 12/75 |
| Add Metric | T. Stanton | | 03/03 |
| Reviewed | | T. Stanton | 04/06 |
| Edited | | T. Stanton | 02/09 |
| Edited | S.S. | T. Regello | 03/11 |

**SAN DIEGO REGIONAL STANDARD DRAWING**

**SINGLE BOX CULVERT**

**DETAILS No.1**

RECOMMENDED BY THE SAN DIEGO REGIONAL STANDARDS COMMITTEE

Chairperson R.C.E. 19246 Date 7/26/2012

DRAWING NUMBER **D-76C**

SPANS 6' (all measurements in feet and/or inches)

| SPAN | | | 6' | | | | | | | | | | | | | | | | | | | |
|---|---|---|---|---|---|---|---|---|---|---|---|---|---|---|---|---|---|---|---|---|---|---|
| HEIGHT | | | 2' | | 3' | | 4' | | | 5' | | | | 6' | | | | | 7' | | | | |
| STRENGTH CLASSIFICATION | | | A | B | A | B | A | B | C | A | B | C | D | A | B | C | D | E | A | B | C | D | E |
| MAX FILL OVER TOP | | | 10 | 18 | 10 | 18 | 10 | 18 | 25 | 9 | 18 | 25 | 36 | 9 | 17 | 25 | 36 | 45 | 9 | 17 | 25 | 36 | 45 |
| CONC. | Top Slab | $T_1$ | 8 1/4 | 8 1/4 | 8 1/4 | 8 1/4 | 8 1/4 | 8 1/4 | 9 1/4 | 8 1/4 | 8 1/4 | 9 1/4 | 11 | 8 1/4 | 8 1/4 | 9 1/4 | 11 | 12 | 8 1/4 | 8 1/4 | 9 1/4 | 11 | 12 |
| CONC. | Bottom Slab | $T_2$ | 6 3/4 | 8 | 6 3/4 | 8 | 6 3/4 | 8 | 9 3/4 | 7 1/4 | 8 1/4 | 10 | 11 1/4 | 7 1/4 | 8 1/4 | 10 1/2 | 11 1/4 | 12 1/4 | 7 1/4 | 8 1/4 | 10 1/2 | 11 1/4 | 12 1/4 |
| CONC. | Sidewalls | $T_3$ | 6 | 6 | 6 | 6 | 6 | 6 | 6 | 6 | 6 | 6 | 6 | 6 | 6 | 6 | 6 1/4 | 7 | 6 | 6 | 6 1/4 | 7 | 7 3/4 |
| Reinforcing Steel | "a" | Size Bar " | 5 | 5 | 5 | 5 | 5 | 5 | 6 | 5 | 5 | 6 | 6 | 5 | 5 | 6 | 7 | 7 | 5 | 5 | 6 | 7 | 7 |
| Reinforcing Steel | "a" | Spacing | 4 | 4 | 4 | 4 | 4 | 4 | 5 | 4 | 4 | 5 | 4 1/2 | 4 | 4 | 5 | 5 1/2 | 5 | 4 | 4 | 5 | 5 1/2 | 5 |
| Reinforcing Steel | "a" | Length | 7–3 | 7–3 | 7–3 | 7–3 | 7–3 | 7–3 | 7–2 | 7–3 | 7–3 | 7–2 | 7–2 | 7–3 | 7–3 | 7–2 | 7–3 | 7–5 | 7–3 | 7–3 | 7–2 | 7–5 | 7–6 |
| Reinforcing Steel | "d" Dist. Bars | Top Slab–No. of | 7 | 4 | 7 | 4 | 7 | 4 | | 7 | 4 | | 4 | 7 | 4 | | 4 | 4 | 7 | 4 | | 4 | 4 |
| Reinforcing Steel | "d" Dist. Bars | Bottom Slab–No. of | 4 | | 4 | | 4 | | | 4 | | | 4 | 4 | | | 4 | 4 | 4 | | | 4 | 4 |
| Reinforcing Steel | "e" Bars | Spacing | 18 | 18 | 18 | 18 | 18 | 18 | 17 | 18 | 15 1/2 | 11 1/2 | 8 1/2 | 17 | 10 1/2 | 7 1/2 | 6 | 5 | 12 | 7 1/2 | 7 | 5 | 4 1/2 |
| Reinforcing Steel | Spacers | Number | 12 | | 12 | | 14 | | | 16 | | | | 16 | | | | | 18 | | | | |
| QUAN. | Concrete: C.Y. per lin. ft. | | 40 | 42 | 43 | 46 | 47 | 50 | 58 | 52 | 54 | 60 | 66 | 56 | 58 | 65 | 71 | 78 | 59 | 61 | 70 | 78 | 88 |
| QUAN. | Reinf. lbs per lin. ft. | | 64 | 63 | 66 | 65 | 69 | 67 | 74 | 70 | 70 | 80 | 91 | 73 | 78 | 92 | 112 | 127 | 81 | 90 | 99 | 126 | 139 |

## NOTE

For boxes of height less than that shown in table, use next greater table height slabs, wall dimensions and reinforcing steel, and make necessary changes in bar lengths, number of spacers and quantities.

| Revision | By | Approved | Date |
|---|---|---|---|
| ORIGINAL | | A.Kercheval | 12/75 |
| Add Metric | | T. Stanton | 03/03 |
| Reviewed | | T. Stanton | 04/06 |
| Edited | | T. Stanton | 02/09 |
| Edited | S.S. | T. Regello | 03/11 |

**SAN DIEGO REGIONAL STANDARD DRAWING**

**SINGLE BOX CULVERT**

**DETAILS No.1**

RECOMMENDED BY THE SAN DIEGO REGIONAL STANDARDS COMMITTEE

Chairperson R.C.E. 19246 Date 7/26/2012

DRAWING NUMBER **D-76B**

SPANS UP TO 5' (all measurements in feet and/or inches)

| SPAN | | | 2' | | 3' | | | 4' | | | | | | 5' | | | | | | | | | | | |
|---|---|---|---|---|---|---|---|---|---|---|---|---|---|---|---|---|---|---|---|---|---|---|---|---|---|
| HEIGHT | | | 1'-6" | 2' | 2' | 3' | | 2' | 3' | | 4' | | | 2' | | 3' | | 4' | | | | 5' | | | |
| STRENGTH CLASSIFICATION | | | A | A | A | A | B | A | A | B | A | B | C | A | B | A | B | A | B | C | D | A | B | C | D |
| MAX FILL OVER TOP | | | 66 | | 38 | 38 | 66 | 28 | 28 | 37 | 28 | 37 | 50 | 12 | 27 | 12 | 27 | 11 | 26 | 35 | 46 | 11 | 25 | 35 | 46 |
| CONC. | Top Slab | $T_1$ | 6 | 6 | 6 1/4 | 6 1/4 | 8 | 7 | 7 | 8 | 7 | 8 | 9 | 7 1/2 | 8 | 7 1/2 | 8 | 7 1/2 | 8 | 9 1/2 | 10 1/2 | 7 1/2 | 8 | 9 1/2 | 10 1/2 |
| CONC. | Bottom Slab | $T_2$ | 6 | 6 | 6 1/4 | 6 1/4 | 8 | 7 | 7 | 8 | 7 | 8 | 9 | 6 | 8 | 6 | 8 | 6 | 8 | 10 | 10 3/4 | 6 | 8 | 10 | 10 3/4 |
| CONC. | Sidewalls | $T_3$ | 6 | 6 | 6 | 6 | 6 | 6 | 6 | 6 | 6 | 6 | 6 | 6 | 6 | 6 | 6 | 6 | 6 | 6 | 6 | 6 | 6 | 6 | 6 |
| Reinforcing Steel | "a" | Size Bar " | 4 | 4 | 4 | 4 | 5 | 5 | 5 | 5 | 5 | 5 | 6 | 5 | 5 | 5 | 5 | 5 | 5 | 6 | 6 | 5 | 5 | 6 | 6 |
| Reinforcing Steel | "a" | Spacing | 3 1/2 | 3 1/2 | 3 1/2 | 3 1/2 | 4 | 5 | 5 | 4 1/2 | 5 | 4 1/2 | 5 | 4 | 4 | 4 | 4 | 4 | 4 | 5 | 4 1/2 | 4 | 4 | 5 | 4 1/2 |
| Reinforcing Steel | "a" | Length | 3-2 | 3-2 | 4-2 | 4-2 | 4-3 | 5-3 | 5-3 | 5-3 | 5-3 | 5-3 | 5-2 | 6-3 | 6-3 | 6-3 | 6-3 | 6-3 | 6-3 | 6-2 | 6-2 | 6-3 | 6-3 | 6-2 | 6-2 |
| Reinforcing Steel | "d" Dist. Bars | Top Slab-No. of | 2 | 2 | 3 | 3 | 2 | 3 | 5 | 3 | 3 | 3 | 3 | 7 | 3 | 7 | 3 | 7 | 3 | | 3 | 7 | 3 | | 3 |
| Reinforcing Steel | "d" Dist. Bars | Bottom Slab-No. of | 2 | 2 | 2 | 2 | 2 | 3 | 3 | | 3 | | 3 | 3 | | 3 | | 3 | | | 3 | 3 | 3 | | 3 |
| Reinforcing Steel | "e" Bars | Spacing | 18 | 18 | 18 | 18 | 12 1/4 | 18 | 18 | 18 | 17 | 13 | 9 1/2 | 18 | 18 | 18 | 18 | 18 | 17 | 13 | 11 | 18 | 12 | 8 1/2 | 6 1/2 |
| Reinforcing Steel | Spacers | Number | 12 | 12 | 12 | 12 | | 12 | 12 | | 14 | | | 14 | | 14 | | 14 | | | | 16 | | | |
| QUAN. | Concrete: C.Y. per lin. ft. | | 17 | 18 | 23 | 27 | 31 | 29 | 33 | 36 | 36 | 40 | 43 | 32 | 37 | 36 | 41 | 40 | 44 | 51 | 54 | 43 | 48 | 55 | 57 |
| QUAN. | Reinf. lbs per lin. ft. | | 27 | 29 | 34 | 36 | 46 | 44 | 45 | 47 | 48 | 52 | 64 | 57 | 56 | 59 | 57 | 61 | 60 | 68 | 75 | 63 | 65 | 77 | 87 |

## NOTE

For boxes of height less than that shown in table, use next greater table height slabs, wall dimensions and reinforcing steel, and make necessary changes in bar lengths, number of spacers and quantities.

| Revision | By | Approved | Date |
|---|---|---|---|
| ORIGINAL | | A.Kercheval | 12/75 |
| Add Metric | T. Stanton | | 03/03 |
| Reviewed | T. Stanton | | 04/06 |
| Edited | T. Stanton | | 02/09 |
| Edited | S.S. T. Regello | | 03/11 |

**SAN DIEGO REGIONAL STANDARD DRAWING**

# SINGLE BOX CULVERT
# DETAILS No.1

RECOMMENDED BY THE SAN DIEGO REGIONAL STANDARDS COMMITTEE

Chairperson R.C.E. 19246 Date 7/26/2012

DRAWING NUMBER **D-76A**

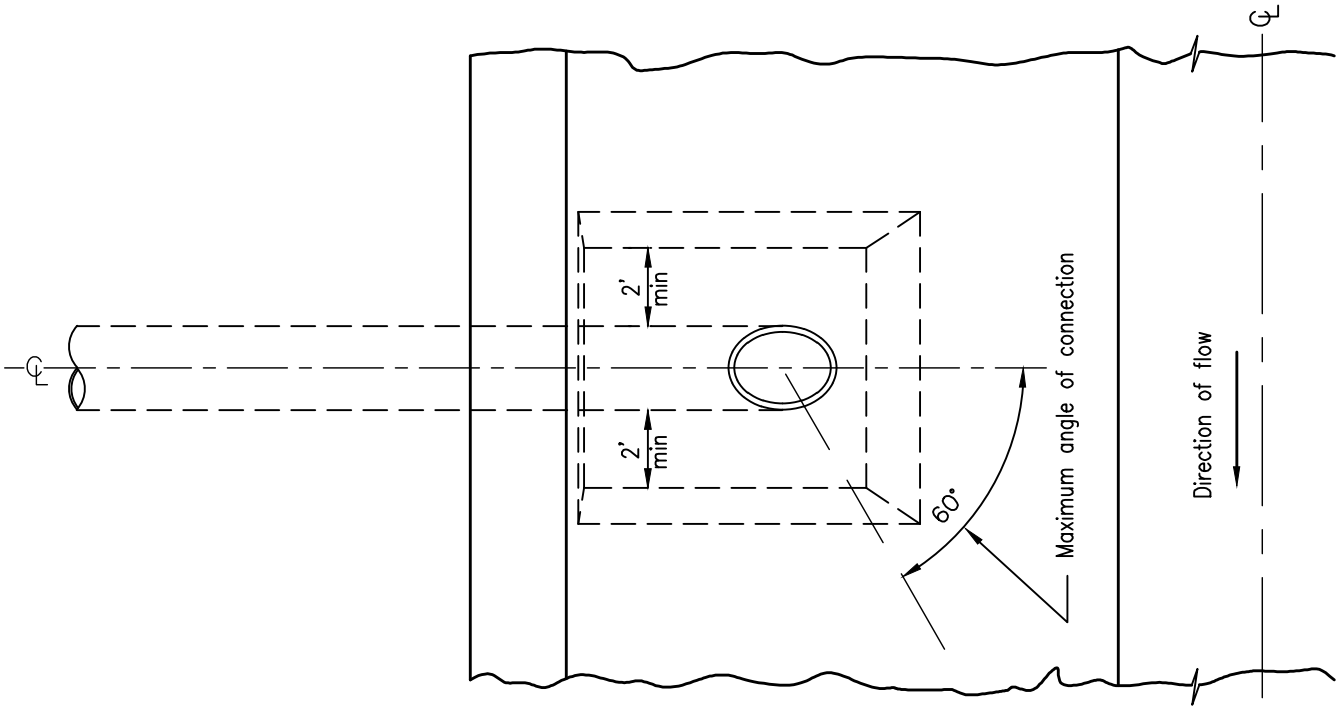


PLAN

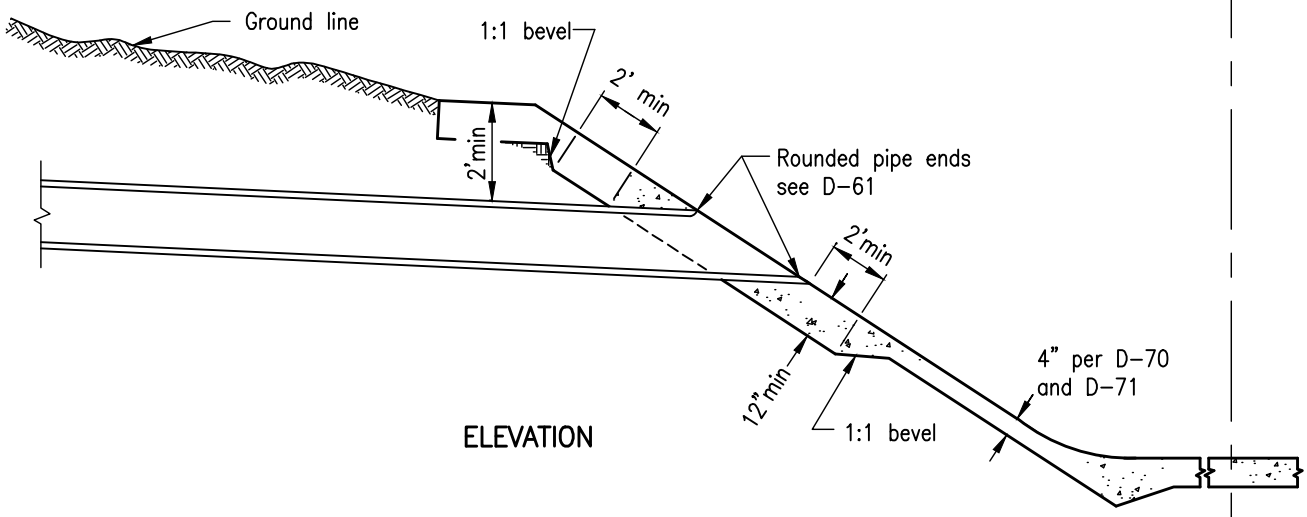


ELEVATION

## NOTES:

1. Concrete shall be 560-C-3250.
2. Pipe shall connect to channel as high as possible and not be constructed directly above a weep hole.
3. The maximum angle of connection is 60° downstream. In no case shall a pipe angle upstream.
4. Install 6 x 6-W1.4 x W1.4 WWR in concrete around pipe.

LEGEND ON PLANS

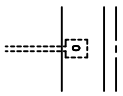

| Revision | By | Approved | Date |
|---|---|---|---|
| ORIGINAL | | Kercheval | 12/75 |
| Add Metric | | T. Stanton | 03/03 |
| Reviewed | | T. Stanton | 04/06 |
| Edited | S.S. | T. Regello | 03/11 |
| | | | |

SAN DIEGO REGIONAL STANDARD DRAWING

# PIPE TO CHANNEL CONNECTION

RECOMMENDED BY THE SAN DIEGO REGIONAL STANDARDS COMMITTEE

7/26/2012

Chairperson R.C.E. 19246 Date

DRAWING NUMBER **D-73**

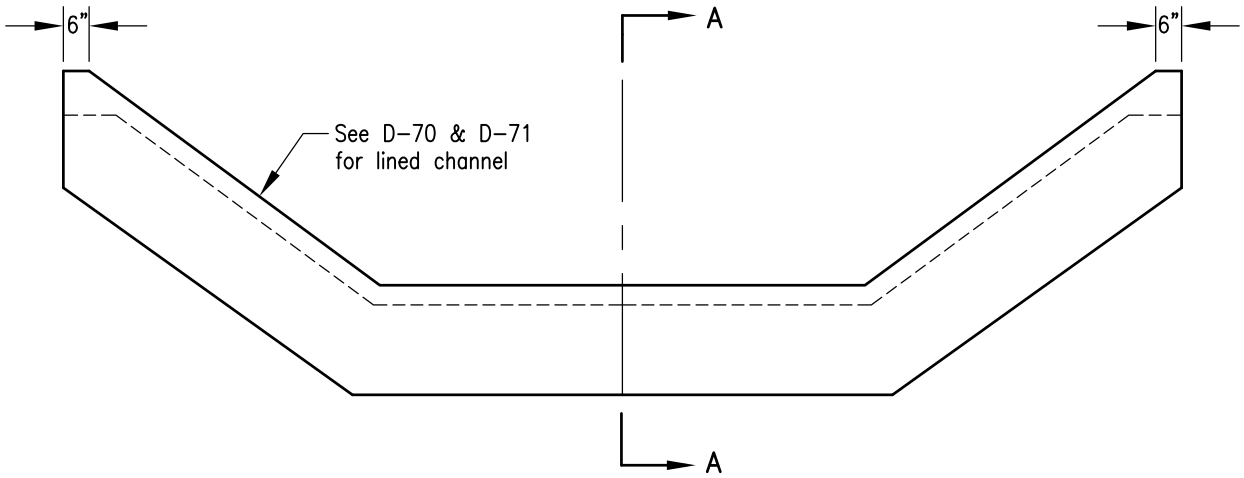


ELEVATION

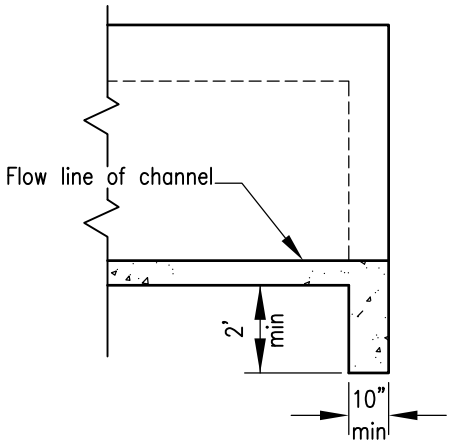


SECTION A–A

LEGEND ON PLANS

NOTES

1. Thickness and wall depth shall be as shown on plan.
2. Reinforcing in cutoff wall shall be the same as that required in channel.
3. Concrete shall be 560–C–3250.

| Revision | By | Approved | Date |
|---|---|---|---|
| ORIGINAL | | Kercheval | 12/75 |
| Add Metric | | T. Stanton | 03/03 |
| Reviewed | | T. Stanton | 04/06 |
| Edited | S.S. | T. Regello | 03/11 |
| | | | |

SAN DIEGO REGIONAL STANDARD DRAWING

# CUTOFF WALL FOR DRAINAGE CHANNEL

RECOMMENDED BY THE SAN DIEGO REGIONAL STANDARDS COMMITTEE

7/26/2012

Chairperson R.C.E. 19246 Date

DRAWING NUMBER **D-72**

FOR DRAWINGS D-70 AND D-71, SEE DRAWINGS SDD-107 AND SDD-108

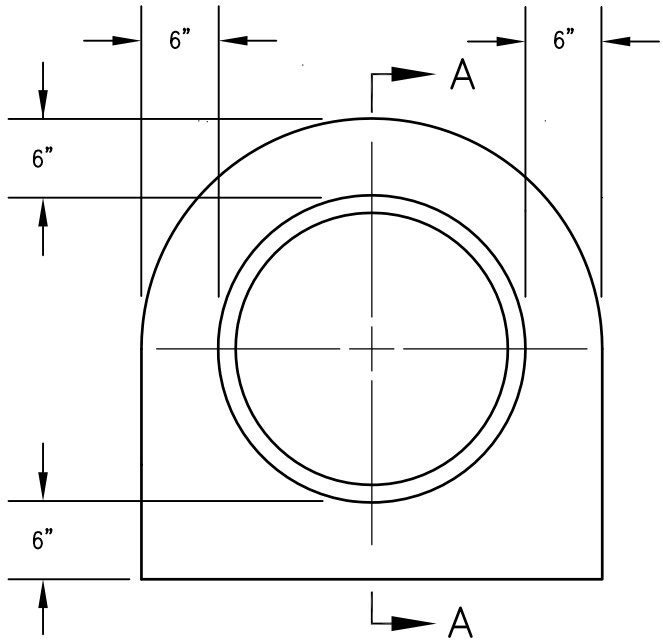


ELEVATION

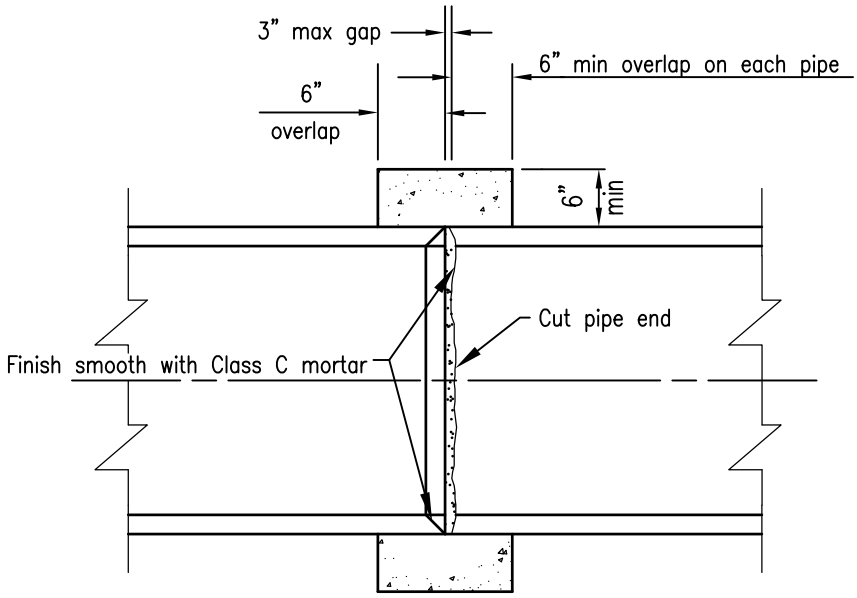


SECTION A–A

NOTES

1. Pipe collar does not have to be finished if covered.
2. Concrete shall be 560–C–3250.
3. Where gap exceeds 3" but is not more than 6" an internal form shall be used.

LEGEND ON PLANS

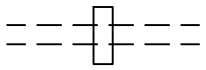

| Revision | By | Approved | Date |
|---|---|---|---|
| ORIGINAL | | Kercheval | 12/75 |
| Add Metric | | T. Stanton | 03/03 |
| Reviewed | | T. Stanton | 04/06 |
| Edited | S.S. | T. Regello | 03/11 |
| | | | |

SAN DIEGO REGIONAL STANDARD DRAWING

# PIPE COLLAR

RECOMMENDED BY THE SAN DIEGO REGIONAL STANDARDS COMMITTEE

7/26/2012

Chairperson R.C.E. 19246 Date

DRAWING NUMBER **D-62**

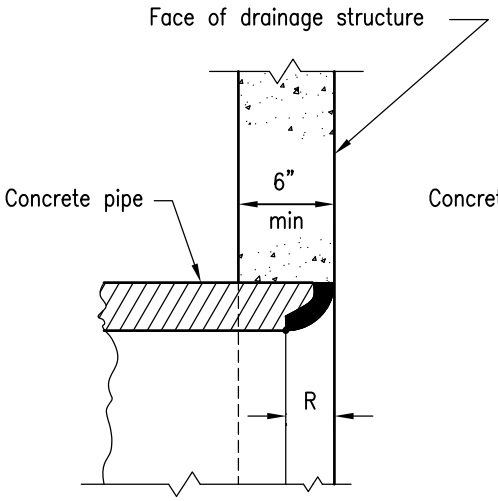


BELL END

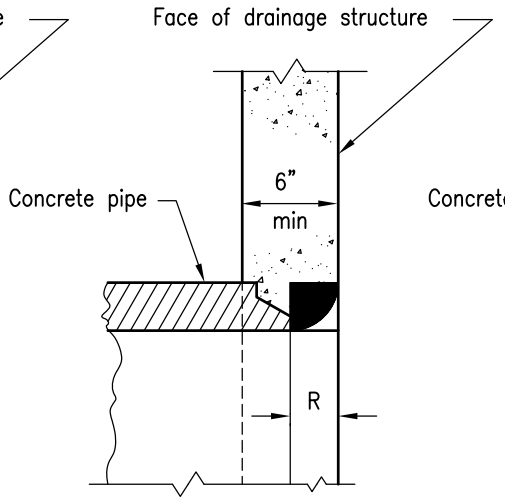


SPIGOT END

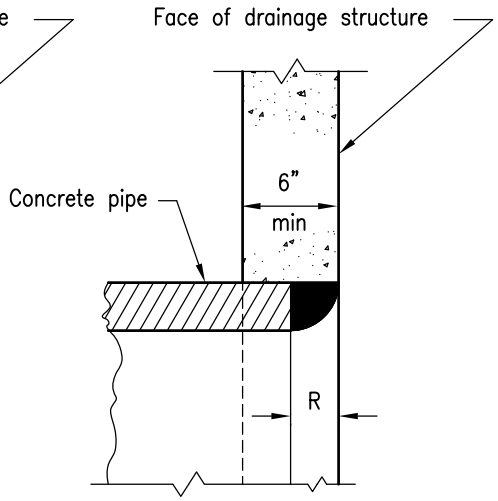


CUT END

R = Thickness of pipe

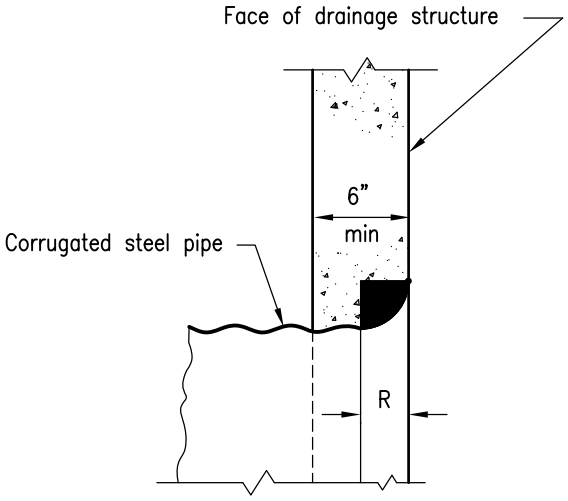


CUT END

$$R = \frac{\text{Inside diameter of pipe}}{10}$$

NOTE

The rounded areas may be built up of cement mortar or poured in place with the drainage structure.

| Revision | By | Approved | Date |
|---|---|---|---|
| ORIGINAL | | Kercheval | 12/75 |
| Add Metric | | T. Stanton | 03/03 |
| Reviewed | | T. Stanton | 04/06 |
| Edited | S.S. | T. Regello | 03/11 |
| | | | |

SAN DIEGO REGIONAL STANDARD DRAWING

# ROUNDED PIPE ENDS IN DRAINAGE STRUCTURES

RECOMMENDED BY THE SAN DIEGO REGIONAL STANDARDS COMMITTEE

7/26/2012

Chairperson R.C.E. 19246 Date

DRAWING NUMBER **D-61**

| Revision | By | Approved | Date |
|---|---|---|---|
| ORIGINAL | | Kercheval | 12/75 |
| Add Metric | | T. Stanton | 03/03 |
| Reformatted | | T. Stanton | 04/06 |
| Edited | | T. Stanton | 02/09 |
| Edited | S.S. | T. Regello | 03/11 |

**SAN DIEGO REGIONAL STANDARD DRAWING**

# PIPE CULVERT - HEADWALLS, ENDWALLS & WARPED WINGWALLS

RECOMMENDED BY THE SAN DIEGO REGIONAL STANDARDS COMMITTEE

7/26/2012

Chairperson R.C.E. 19246 Date

DRAWING NUMBER **D-44D**

## WARPED WINGWALLS (all measurements in feet and/or inches unless otherwise noted)

### WALL DIMENSIONS AND REINFORCING

| Element Slope | H | 8'or less | 10' | 12' | 14' | 16' | 18' | 20' |
|---|---|---|---|---|---|---|---|---|
| 1/4:1 | Front face reinf | #4@12 | #4@ 7 | #5@ 7 | #5@ 5 | #6@ 6 | #7@ 7 | #7@ 6 |
| | Rear face reinf | #4@12 | #4@12 | #4@12 | #4@12 | #4@12 | #4@12 | #4@12 |
| 3/4:1 | Front face reinf | #4@12 | #4@12 | #4@12 | #4@12 | #4@10 | #4@ 8 | #4@ 6 |
| | Rear face reinf | #4@12 | #4@12 | #4@12 | #4@10 | #4@ 7 | #4@ 6 | #5@ 8 |
| 1-1/4:1 | Front face reinf | #4@12 | #4@12 | #4@12 | #4@12 | #4@12 | #4@12 | #4@12 |
| | Rear face reinf | #4@ 8 | #4@ 8 | #4@ 5 | #5@ 6 | #6@ 7 | #6@ 6 | #7@ 6 |
| D at Cutoff Wall | | 6" | 6" | 6" | 7-1/2" | 8" | 9-1/2" | 11" |
| D at Culvert | | 6" | 6" | 6" | 8" | 9-1/2" | 11" | 1'-1" |

### STIFFENING BEAM DIMENSIONS AND REINFORCING

| H max \ L | 12' | 14' | 16' | 18' | 20' | 25' | 30' | 35' | 40' or more |
|---|---|---|---|---|---|---|---|---|---|
| 6' | No beam. Place 2-#6 in each face along top of wall. | | | | | | | | |
| 8' | | | | | | | | | |
| 10' | | | | A= 1' | | | | | |
| 12' | | | | B= 9" | | | | | |
| 14' | | Total 6-#6 | | | | A= 1'-6" | | | |
| 16' | | | | | B= 1' | | | A= 1'-10" | |
| 18' | | | | Total 6-#7 | | | B=1' | | A=2' |
| 20' | | | | | | Total 6-#8 | | B= 1'-6" | |
| | | | | | | | Total 8-#9 | | |

## NOTES

1. Walls designed for 2' surcharge; earth density = 120 # / cu. ft.; equivalent fluid pressure = 36 #/cu. ft.
2. Vary "D" at warped wall uniformly from that at cutoff wall to that at culvert, for maximum H > 12'.
3. Dimensions "L", "W", "H", "M", "N", "Elev a", "Angle of flare", and end "slope" (as apply) are shown on the plans.
4. All exposed concrete edges to be chamfered 3/4".

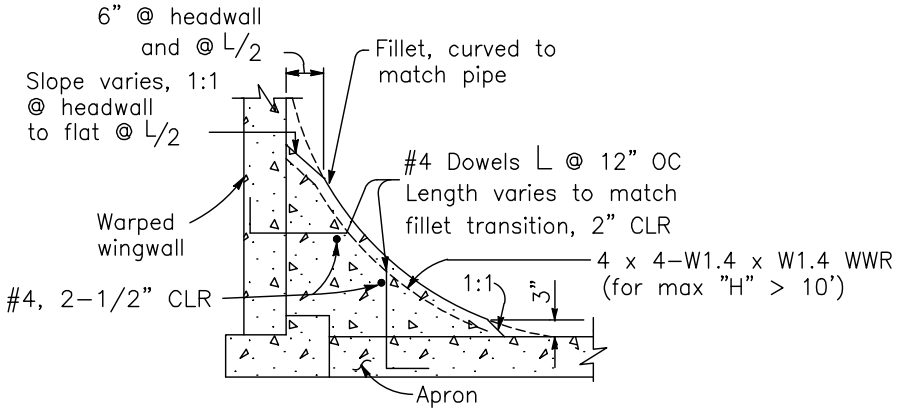


SECTION F-F

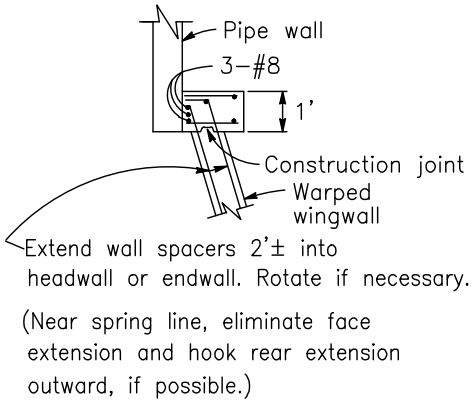


SECTION B-B

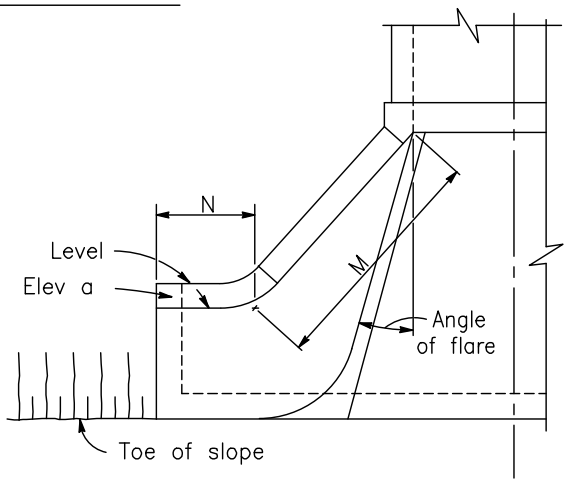


ALTERNATIVE WARPED WINGWALL

Use where additional protection to toe of embankment is required. If at upstream end, fillet is not shown.

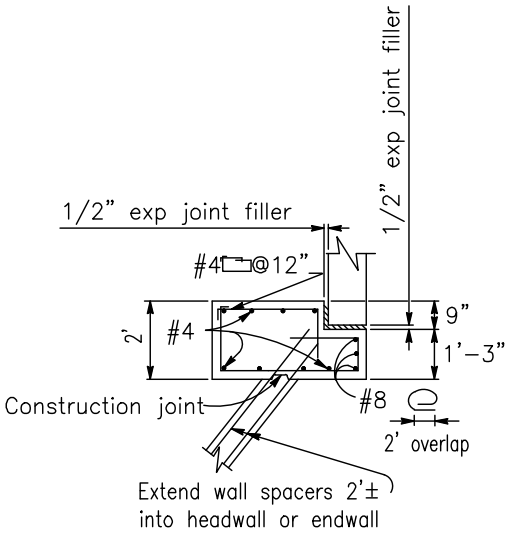


SECTION A-A

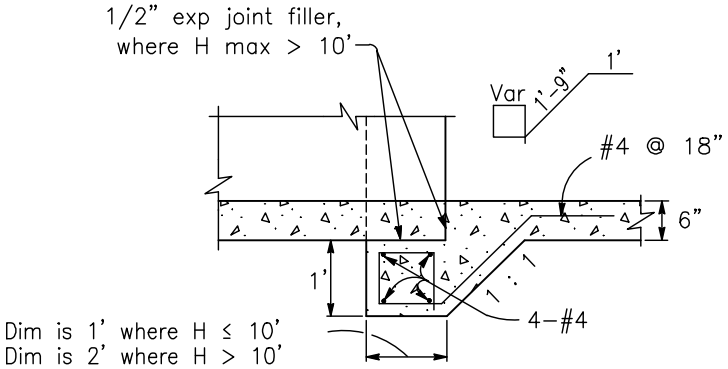


DETAIL E

| Revision | By | Approved | Date |
|---|---|---|---|
| ORIGINAL | | Kercheval | 12/75 |
| Add Metric | | T. Stanton | 03/03 |
| Reformatted | | T. Stanton | 04/06 |
| Edited | S.S. | T. Regello | 03/11 |
| | | | |

**SAN DIEGO REGIONAL STANDARD DRAWING**

# PIPE CULVERT - HEADWALLS, ENDWALLS & WARPED WINGWALLS

RECOMMENDED BY THE SAN DIEGO REGIONAL STANDARDS COMMITTEE

7/26/2012

Chairperson R.C.E. 19246 Date

DRAWING NUMBER **D-44C**

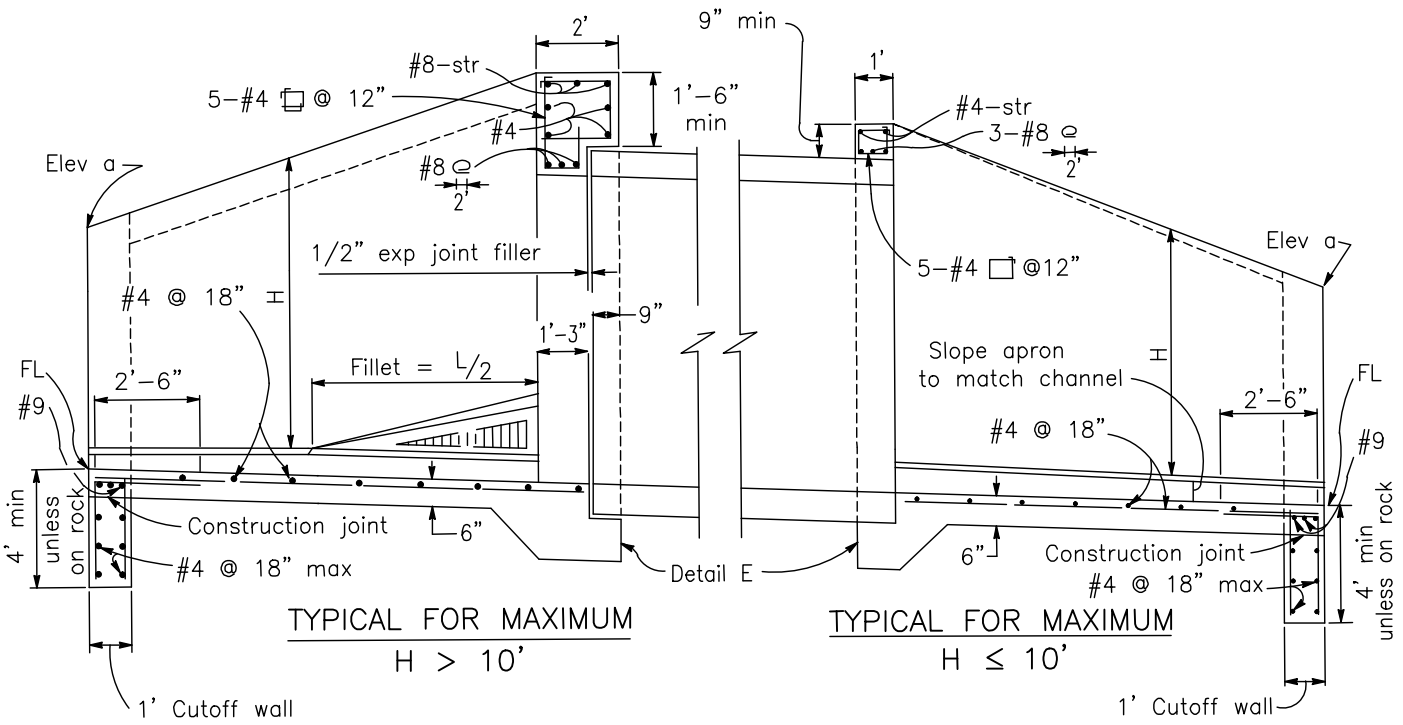


PART LONGITUDINAL SECTION

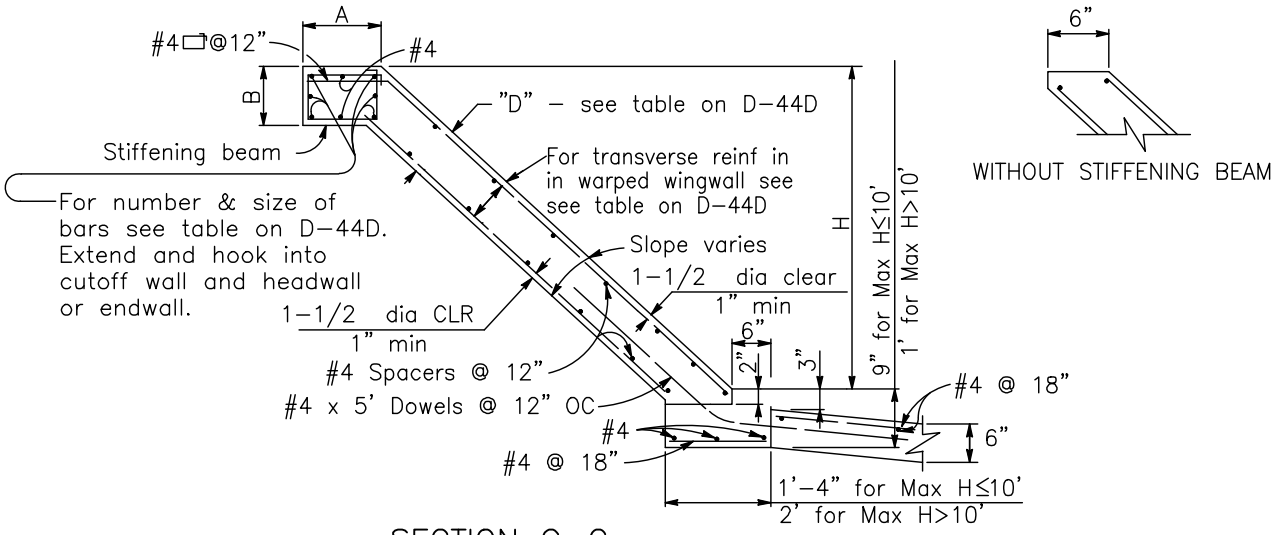


SECTION C–C

## NOTES

1. RCP is shown. When using metal pipe eliminate the expansion joint and use hook bolts @ 19"± spacing (size and length provided by manufacturer).
2. Where abrasion is anticipated, increase apron thickness to 7" minimum to provide 2" minimum reinforcement coverage.

| Revision | By | Approved | Date |
|---|---|---|---|
| ORIGINAL | | Kercheval | 12/75 |
| Add Metric | | T. Stanton | 03/03 |
| Reformatted | | T. Stanton | 04/06 |
| Edited | S.S. | T. Regello | 03/11 |
| | | | |

**SAN DIEGO REGIONAL STANDARD DRAWING**

# PIPE CULVERT - HEADWALLS, ENDWALLS & WARPED WINGWALLS

RECOMMENDED BY THE SAN DIEGO REGIONAL STANDARDS COMMITTEE

T. Stanton 7/26/2012

Chairperson R.C.E. 19246 Date

DRAWING NUMBER **D-44B**

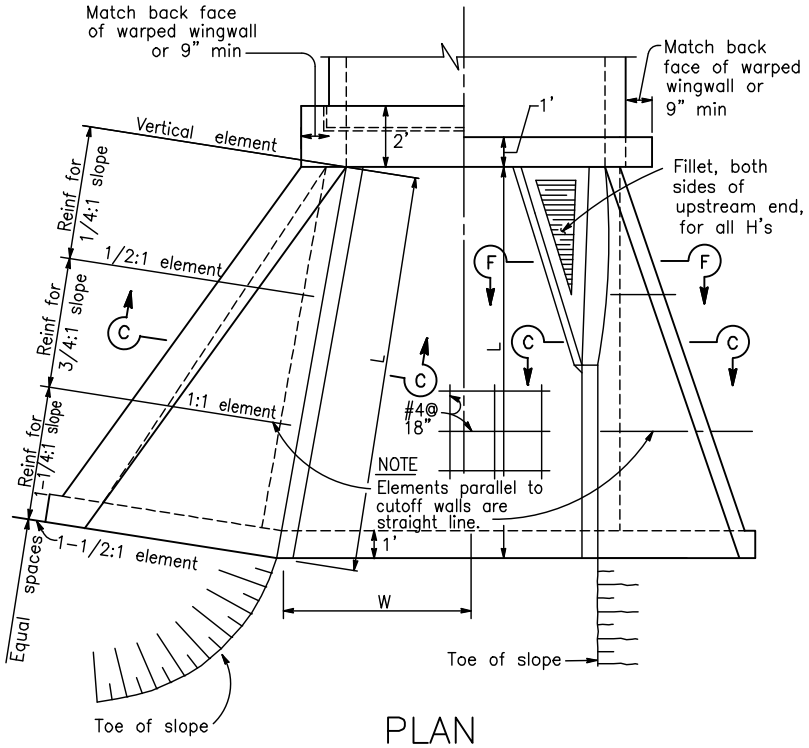


PLAN

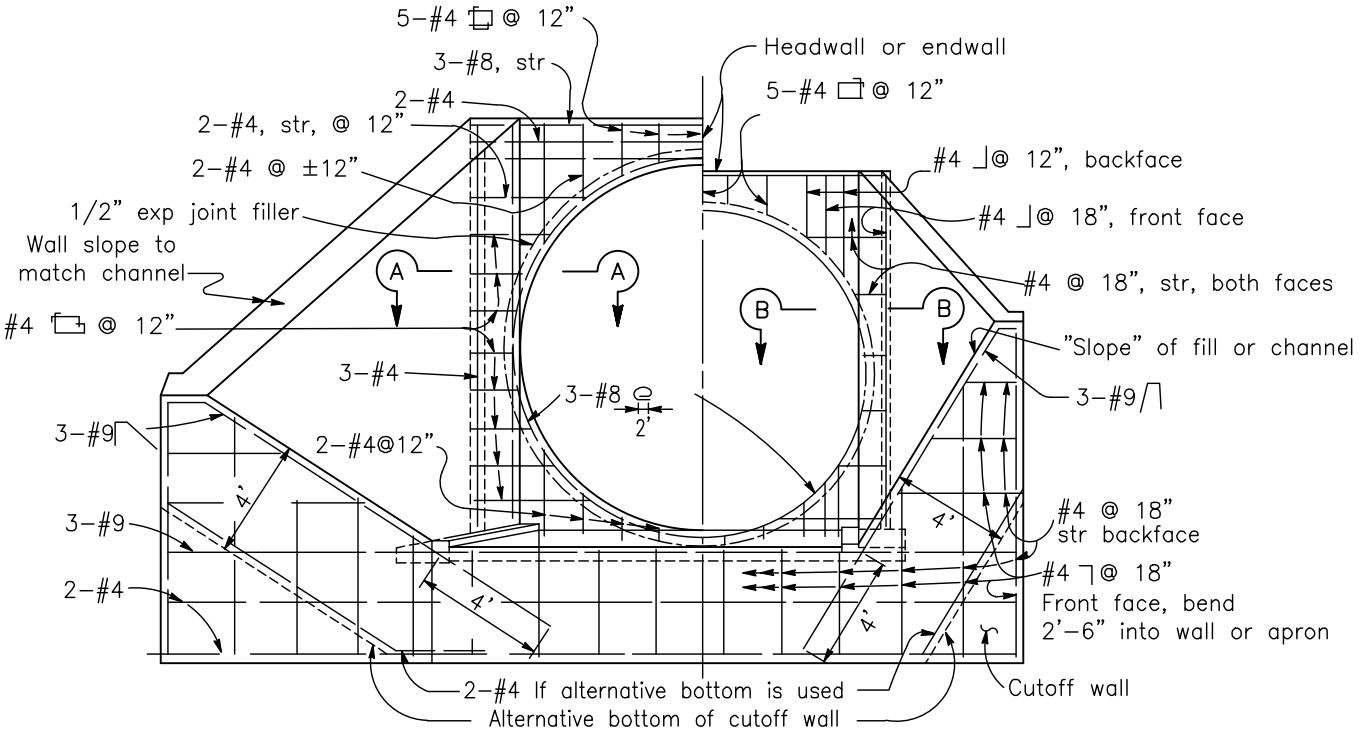


TYPICAL FOR MAXIMUM H > 10'

TYPICAL FOR MAXIMUM H ≤ 10'

END ELEVATION

If at upstream end, fillet is not shown

**NOTE**

See notes on D-44D.

| Revision | By | Approved | Date |
|---|---|---|---|
| ORIGINAL | | Kercheval | 12/75 |
| Add Metric | | T. Stanton | 03/03 |
| Reformatted | | T. Stanton | 04/06 |
| Edited | S.S. | T. Regello | 03/11 |
| | | | |

**SAN DIEGO REGIONAL STANDARD DRAWING**

# PIPE CULVERT - HEADWALLS, ENDWALLS & WARPED WINGWALLS

RECOMMENDED BY THE SAN DIEGO REGIONAL STANDARDS COMMITTEE

T. Stanton 7/26/2012

Chairperson R.C.E. 19246 Date

DRAWING NUMBER **D-44A**

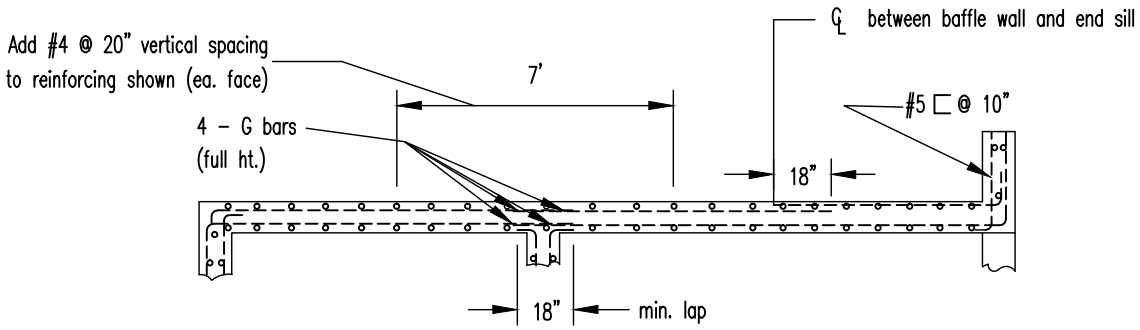


# SECTION D–D

| Pipe dia. (in.) | 36" | 42" | 48" | 54" | 60" | 72" |
|---|---|---|---|---|---|---|
| A bar | # 5 @ 12" | | #6 @ 12" | | #7 @ 12" | |
| B bar | # 5 @ 12" | | #6 @ 12" | | | |
| C bar | # 4 @ 12" | | #5 @ 12" | | | |
| D bar | # 4 @ 12" | | #5 @ 12" | | #6 @ 12" | |
| E bar | # 4 @ 12" | | #5 @ 12" | | | |
| F bar | # 4 @ 9" | | #5 @ 9" | | | #6 @ 9" |
| G bar | # 7 | | | # 11 | | |

## NOTES

1. Match location of sidewall reinforcing.
2. Dowels having same size and spacing as wall reinforcing may be used in lieu of continuous bars at contractors option.
3. Match location of headwall or end sill reinforcing.

| Revision | By | Approved | Date |
|---|---|---|---|
| ORIGINAL | | Kercheval | 12/75 |
| Add Metric | | T. Stanton | 03/03 |
| Reformatted | | T. Stanton | 04/06 |
| Edited | | T. Stanton | 02/09 |
| Edited | S.S. | T. Regello | 03/11 |

**SAN DIEGO REGIONAL STANDARD DRAWING**

**CONCRETE ENERGY DISSIPATER (REINFORCEMENT) 36" TO 72" DIAMETER PIPE**

RECOMMENDED BY THE SAN DIEGO REGIONAL STANDARDS COMMITTEE

7/26/2012

Chairperson R.C.E. 19246 Date

DRAWING NUMBER **D-43C**

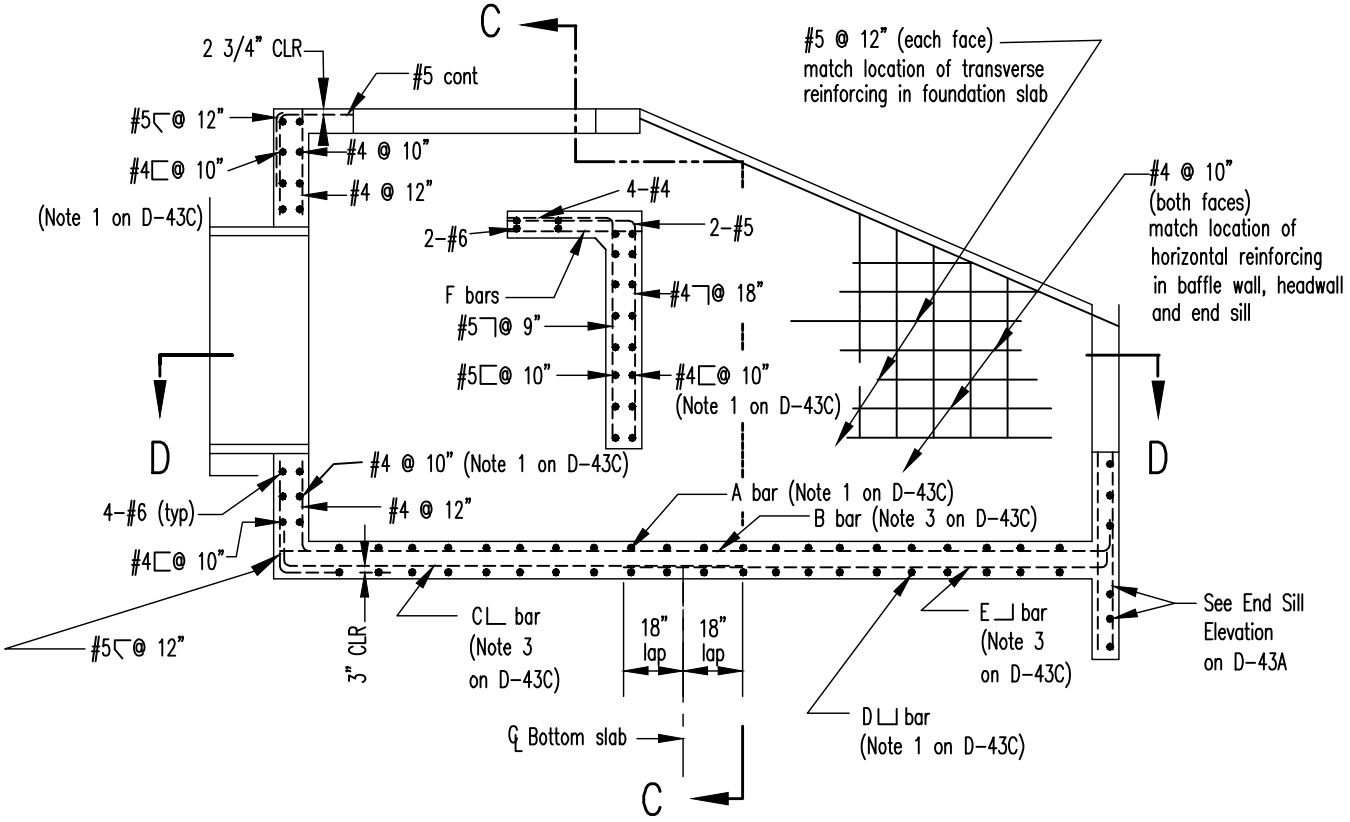


SECTION A–A

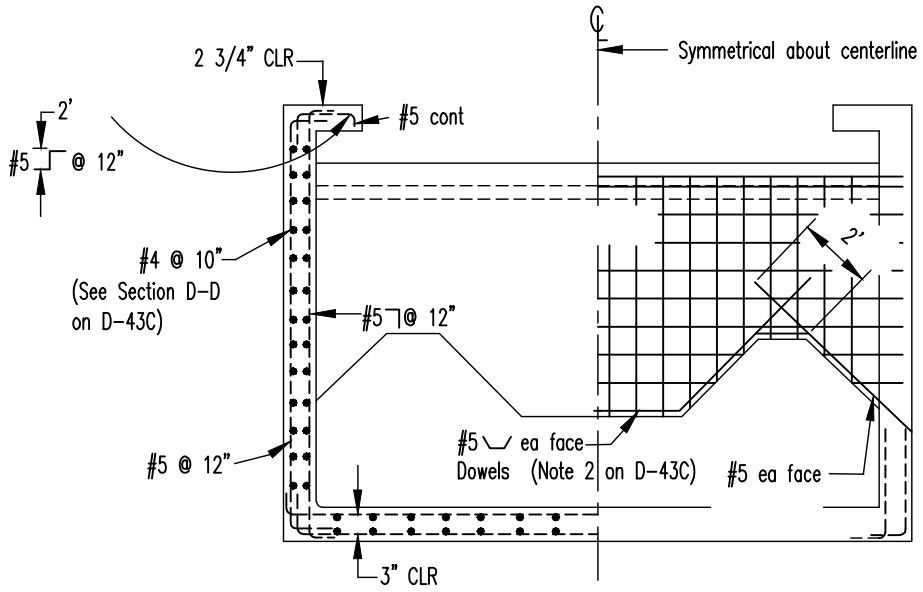


SECTION C–C

| Revision | By | Approved | Date |
|---|---|---|---|
| ORIGINAL | | Kercheval | 12/75 |
| Add Metric | | T. Stanton | 03/03 |
| Reformatted | | T. Stanton | 04/06 |
| Edited | | T. Stanton | 02/09 |
| Edited | S.S. | T. Regello | 03/11 |

**SAN DIEGO REGIONAL STANDARD DRAWING**

**CONCRETE ENERGY DISSIPATER**
**(REINFORCEMENT)**
**36" TO 72" DIAMETER PIPE**

RECOMMENDED BY THE SAN DIEGO REGIONAL STANDARDS COMMITTEE

7/26/2012

Chairperson R.C.E. 19246 Date

DRAWING NUMBER **D-43B**

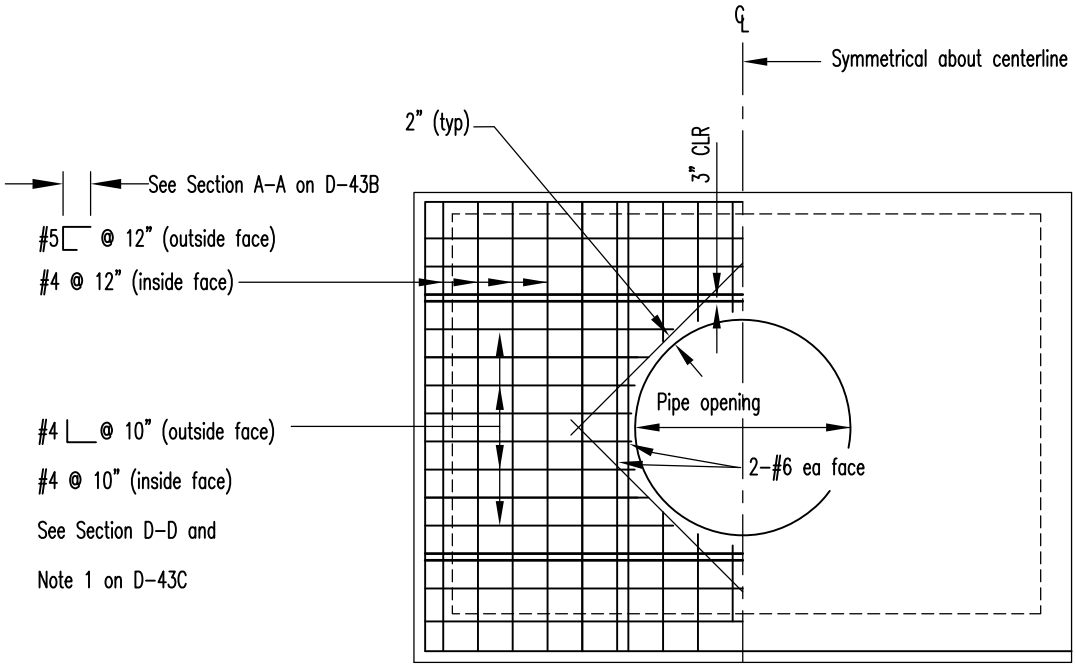


HEADWALL ELEVATION

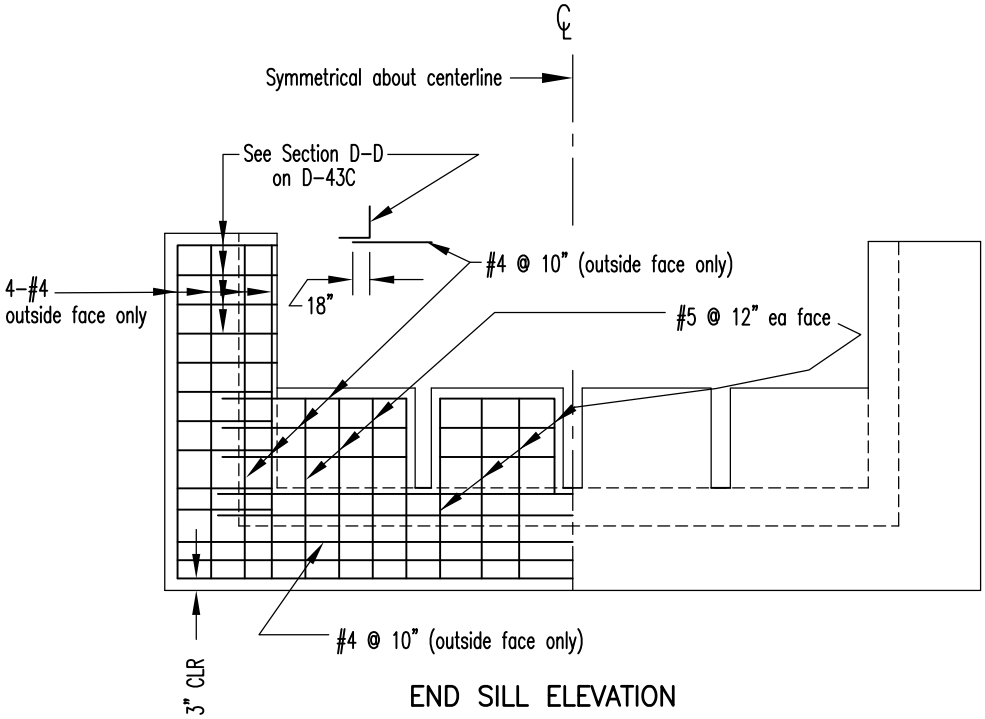


END SILL ELEVATION

| Revision | By | Approved | Date |
|---|---|---|---|
| ORIGINAL | | Kercheval | 12/75 |
| Add Metric | | T. Stanton | 03/03 |
| Reformatted | | T. Stanton | 04/06 |
| Edited | | T. Stanton | 02/09 |
| Edited | S.S. | T. Regello | 03/11 |

**SAN DIEGO REGIONAL STANDARD DRAWING**

# CONCRETE ENERGY DISSIPATER (REINFORCEMENT) 36" TO 72" DIAMETER PIPE

RECOMMENDED BY THE SAN DIEGO REGIONAL STANDARDS COMMITTEE

7/26/2012

Chairperson R.C.E. 19246 Date

DRAWING NUMBER **D-43A**

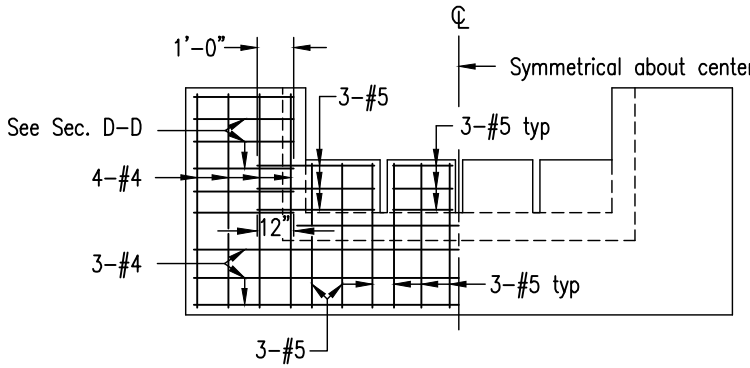


END SILL ELEVATION

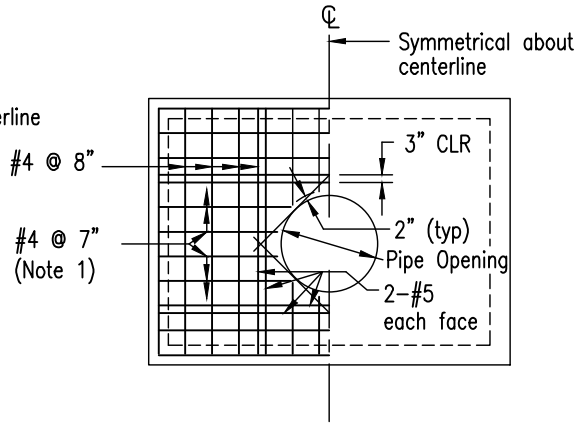


HEADWALL ELEVATION

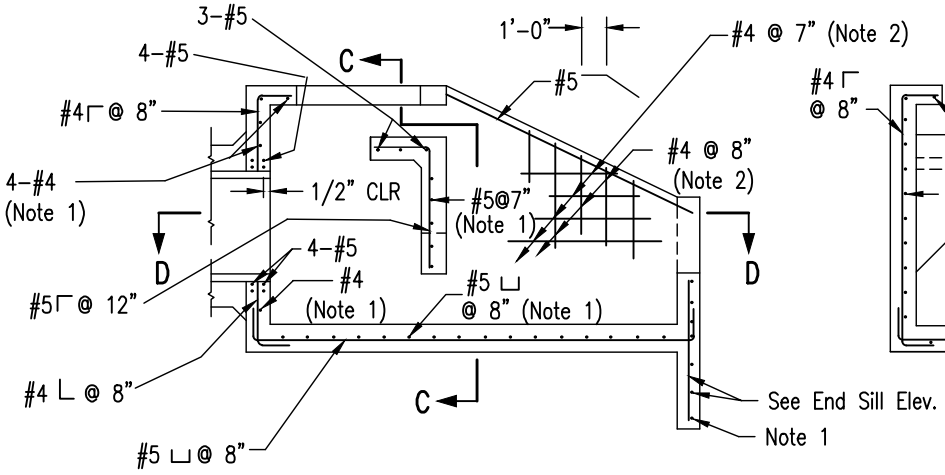


SECTION A–A

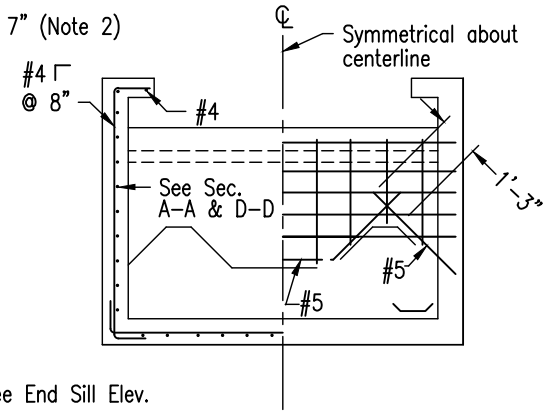


SECTION C–C

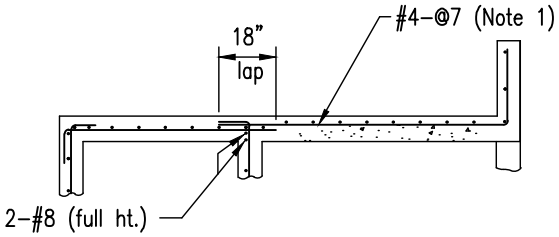


SECTION D–D

## NOTES

1. Place reinforcing, as noted, at center of wall (or slab).
2. Match location of reinforcing with that in headwall, end sill and foundation slab.
3. All reinforcing shall be placed with 2" concrete cover, unless noted otherwise.

| Revision | By | Approved | Date |
|---|---|---|---|
| ORIGINAL | | Kercheval | 12/75 |
| Add Metric | | T. Stanton | 03/03 |
| Reformatted | | T. Stanton | 04/06 |
| Edited | | T. Stanton | 02/09 |
| Edited | S.S. | T. Regello | 03/11 |

**SAN DIEGO REGIONAL STANDARD DRAWING**

**CONCRETE ENERGY DISSIPATER (REINFORCEMENT)**

**18" TO 30" DIAMETER PIPE**

RECOMMENDED BY THE SAN DIEGO REGIONAL STANDARDS COMMITTEE

T. Stanton 7/26/2012

Chairperson R.C.E. 19246 Date

DRAWING NUMBER **D-42**

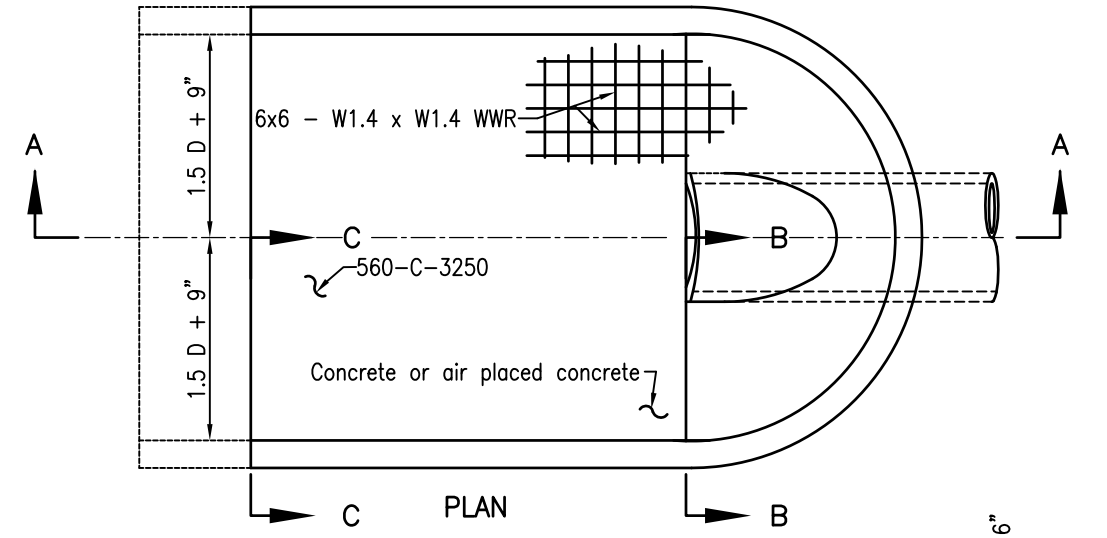


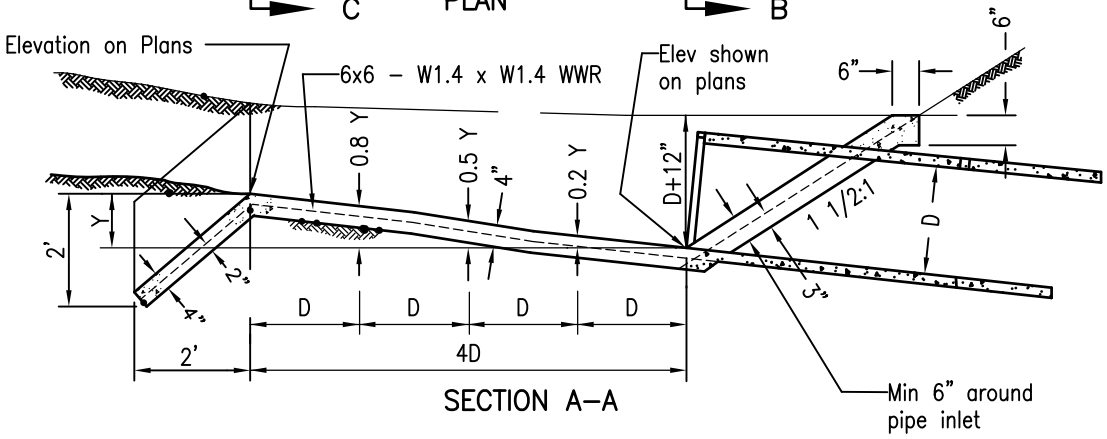


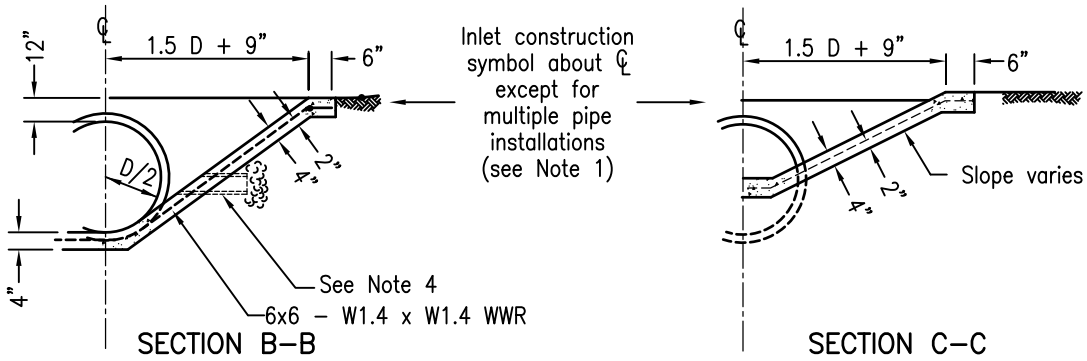


## NOTES

1. When more than one pipe is used the profile view shown shall hold for the distance across all pipe openings. Section A–A and B–B shall be from the outermost pipe. The distance between pipes shall be D/2 for round and Span/3 for arch pipe (12" minimum).
2. Culvert shall be cut off even with apron surface when required by the Agency.
3. Use Inlet Apron only where a flared and section can not be utilized.
4. Place weep holes when required by the Agency.

LEGEND ON PLANS

| Revision | By | Approved | Date |
|---|---|---|---|
| ORIGINAL | | Kercheval | 12/75 |
| Add Metric | | T. Stanton | 03/03 |
| Reformatted | | T. Stanton | 04/06 |
| Edited | S.S. | T. Regello | 03/11 |
| | | | |

**SAN DIEGO REGIONAL STANDARD DRAWING**

# INLET APRON FOR CULVERTS UP TO 42" DIAMETER

RECOMMENDED BY THE SAN DIEGO REGIONAL STANDARDS COMMITTEE

7/26/2012

Chairperson R.C.E. 19246 Date

DRAWING NUMBER **D-39**

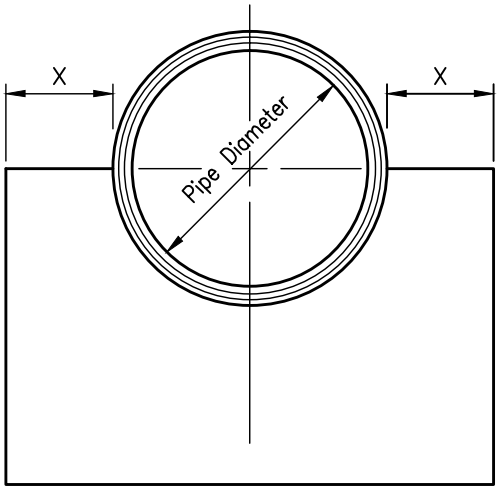


FACE ELEVATION

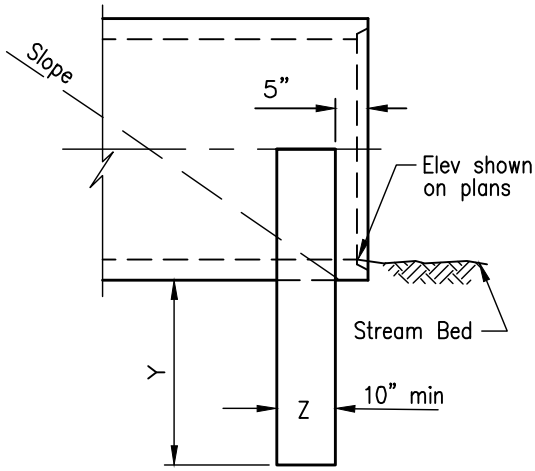


SIDE ELEVATION

| PIPE DIAMETER | X | Y | Z |
|---|---|---|---|
| 12" TO 24" | 1' | 2' | 10" |
| 21" TO 36" | 1"–6" | 2"–6" | 12" |
| 39" TO 48" | 2' | 3' | 12" |
| 51" TO 60" | 2'–6" | 3' | 14" |
| 63" & LARGER | 3' | 3' | 14" |

## NOTES

1. A curtain wall shall be used in place of a headwall at culvert ends where extension of the culvert is considered imminent or, no fill is retained.
2. Concrete shall be 560–C–3250.
3. Keep the pipe–end clear of obstructions to permit easy placing of culvert extension.

LEGEND ON PLANS

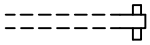

| Revision | By | Approved | Date |
|---|---|---|---|
| ORIGINAL | | Kercheval | 12/75 |
| Add Metric | | T. Stanton | 03/03 |
| Reformatted | | T. Stanton | 04/06 |
| Edited | S.S. | T. Regello | 03/11 |
| | | | |

SAN DIEGO REGIONAL STANDARD DRAWING

# CURTAIN WALL

RECOMMENDED BY THE SAN DIEGO REGIONAL STANDARDS COMMITTEE

T. Stanton 7/26/2012

Chairperson R.C.E. 19246 Date

DRAWING NUMBER **D-38**

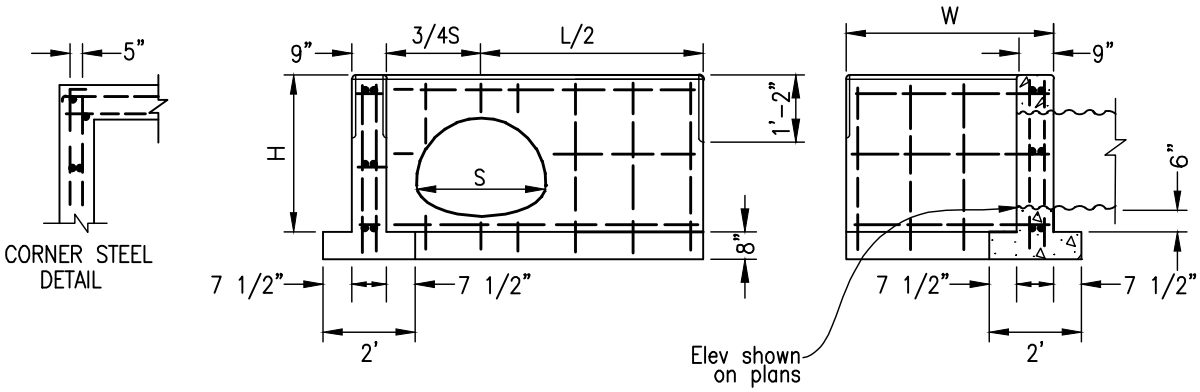


ELEVATION

SECTION

| CSP ARCH SIZE | H | L/2 | LENGTH OF W | | | | | | | | | |
|---|---|---|---|---|---|---|---|---|---|---|---|---|
| | | | 3'-4" | | 4'-10" | | 6'-4" | | 7'-10" | | 9'-4" | |
| | | | STEEL (LBS) | CONC. (CY) | STEEL (LBS) | CONC. (CY) | STEEL (LBS) | CONC. (CY) | STEEL (LBS) | CONC. (CY) | STEEL (LBS) | CONC. (CY) |
| 18"x11" | 2'-7" | 2'-9" | 50 | 0.84 | 60 | 1.03 | 70 | 1.21 | 80 | 1.39 | 90 | 1.57 |
| 21"x15" | 2'-11" | 3'-3" | 60 | 1.00 | 65 | 1.18 | 75 | 1.38 | 90 | 1.58 | 100 | 1.77 |
| 24"x18" | 3'-2" | 3'-9" | 60 | 1.07 | 70 | 1.32 | 80 | 1.53 | 95 | 1.74 | 110 | 1.94 |
| 28"x20" | 3'-4" | 4'-3" | 70 | 1.26 | 80 | 1.47 | 90 | 1.68 | 100 | 1.90 | 115 | 2.11 |
| 35"x24" | 3'-8" | 5'-3" | 100 | 1.51 | 110 | 1.74 | 120 | 1.97 | 140 | 2.20 | 155 | 2.42 |
| 42"x29" | 4'-1" | 6'-3" | 115 | 1.82 | 130 | 2.06 | 140 | 2.31 | 155 | 2.55 | 170 | 2.83 |
| 49"x33" | 4'-5" | 7'-3" | 130 | 2.12 | 145 | 2.37 | 155 | 2.64 | 170 | 2.90 | 185 | 3.15 |
| 57"x38" | 4'-10" | 8'-6" | 145 | 2.52 | 160 | 2.79 | 175 | 3.07 | 190 | 3.35 | 205 | 3.61 |
| 64"x43" | 5'-3" | 9'-6" | 185 | 2.89 | 200 | 3.11 | 215 | 3.48 | 235 | 3.77 | 250 | 4.06 |
| 71"x47" | 5'-7" | 10'-6" | 200 | 3.25 | 215 | 3.56 | 235 | 3.86 | 250 | 4.17 | 270 | 4.48 |

## NOTES

1. Concrete shall be 560-C-3250.
2. All reinforcing steel shall be #4 bars. All vertical and horizontal tie bars shall have 18" maximum spacing.
3. When multiple pipes are used, the distance between pipes shall be S/2 (1' min). The dimension L/2 is from the center of the pipe to the end of the headwall as shown.
4. Exposed corners shall be 3/4" chamfered.

LEGEND ON PLANS

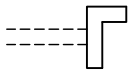

| Revision | By | Approved | Date |
|---|---|---|---|
| ORIGINAL | | Kercheval | 12/75 |
| Add Metric | | T. Stanton | 03/03 |
| Reformatted | | T. Stanton | 04/06 |
| Edited | S.S. | T. Regello | 03/11 |
| | | | |

SAN DIEGO REGIONAL STANDARD DRAWING

# L TYPE HEADWALLS (CORRUGATED STEEL PIPE - ARCH)

RECOMMENDED BY THE SAN DIEGO REGIONAL STANDARDS COMMITTEE

7/26/2012

Chairperson R.C.E. 19246 Date

DRAWING NUMBER D-37

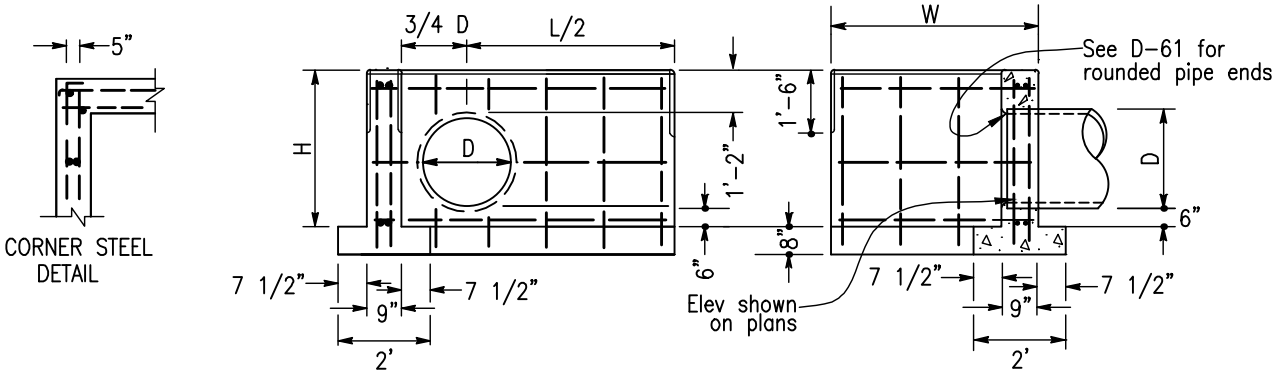


| D | H | L/2 | W | | | | | | | | | |
|---|---|---|---|---|---|---|---|---|---|---|---|---|
| | | | 3'-4" | | 4'-10" | | 6'-4" | | 7'-10" | | 9'-4" | |
| | | | STEEL (LBS) | CONC. (CY) | STEEL (LBS) | CONC. (CY) | STEEL (LBS) | CONC. (CY) | STEEL (LBS) | CONC. (CY) | STEEL (LBS) | CONC. (CY) |
| 12" | 2'-8" | 2'-6" | 50 | 0.79 | 60 | 0.98 | — | — | — | — | — | — |
| 15" | 2'-11" | 3' | 55 | 0.91 | 65 | 1.11 | — | — | — | — | — | — |
| 18" | 3'-2" | 3'-6" | 65 | 1.04 | 75 | 1.25 | — | — | — | — | — | — |
| 21" | 3'-5" | 3'-9" | 75 | 1.15 | 90 | 1.36 | — | — | — | — | — | — |
| 24" | 3'-8" | 4'-3" | 85 | 1.29 | 100 | 1.51 | 110 | 1.74 | — | — | — | — |
| 27" | 3'-11" | 4'-9" | 90 | 1.44 | 105 | 1.67 | 115 | 1.91 | — | — | — | — |
| 30" | 4'-2" | 5' | 95 | 1.55 | 110 | 1.80 | 120 | 2.05 | 135 | 2.29 | — | — |
| 33" | 4'-5" | 5'-6" | 105 | 1.71 | 120 | 1.97 | 135 | 2.23 | 150 | 2.48 | — | — |
| 36" | 4'-8" | 6' | 110 | 1.88 | 125 | 2.15 | 140 | 2.41 | 155 | 2.68 | 170 | 2.95 |
| 39" | 4'-11" | 6'-3" | — | — | 150 | 2.28 | 170 | 2.56 | 185 | 2.84 | 200 | 3.12 |
| 42" | 5'-2" | 6'-9" | — | — | 155 | 2.42 | 175 | 2.76 | 190 | 3.05 | 210 | 3.34 |
| 45" | 5'-5" | 7'-3" | — | — | — | — | 180 | 2.97 | 200 | 3.27 | 215 | 3.57 |
| 48" | 5'-8" | 7'-6" | — | — | — | — | 190 | 3.13 | 216 | 3.44 | 230 | 3.75 |
| 51" | 5'-11" | 8' | — | — | — | — | — | — | 220 | 3.67 | 235 | 3.99 |
| 54" | 6'-2" | 8'-6" | — | — | — | — | — | — | 235 | 3.91 | 250 | 4.24 |

## NOTES

1. Concrete shall be 560-C-3250.
2. All reinforcing steel shall be #4 bars. All vertical and horizontal tie bars shall have 18" maximum spacing.
3. When multiple pipes are used, the distance between pipes shall be D/2 (1' min). The dimension L/2 is from the center of the pipe to the end of the headwall as shown.
4. Exposed corners shall be 3/4" chamfered.

LEGEND ON PLANS

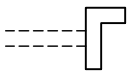

| Revision | By | Approved | Date |
|---|---|---|---|
| ORIGINAL | | Kercheval | 12/75 |
| Add Metric | | T. Stanton | 03/03 |
| Reformatted | | T. Stanton | 04/06 |
| Edited | | T. Stanton | 02/09 |
| Edited | S.S. | T. Regello | 03/11 |

SAN DIEGO REGIONAL STANDARD DRAWING

# L TYPE HEADWALLS (CIRCULAR PIPES)

RECOMMENDED BY THE SAN DIEGO REGIONAL STANDARDS COMMITTEE

T. Stanton 7/26/2012

Chairperson R.C.E. 19246 Date

DRAWING NUMBER **D-36**

## TABLE OF DIMENSIONS AND QUANTITIES FOR HEADWALLS SHOWN ON D-35A

| DIA OF PIPE | DIMENSIONS | | | SINGLE PIPE | | | | | DOUBLE PIPE | | | | |
|---|---|---|---|---|---|---|---|---|---|---|---|---|---|
| | | | | | U TYPE | | WING TYPE | | | U TYPE | | WING TYPE | |
| | L | E | F | W | CONC. (CY) | STEEL (LBS) | CONC. (CY) | STEEL (LBS) | W | CONC. (CY) | STEEL (LBS) | CONC. (CY) | STEEL (LBS) |
| 42" | 3'-7 1/4" | 2' | 3' | 4' | 1.57 | 117 | 1.90 | 135 | 10' | 2.69 | 190 | 3.16 | 214 |
| 48" | 4'-6" | 2'-6" | 3'-9" | 4'-6" | 1.97 | 153 | 2.48 | 184 | 11'-4" | 3.43 | 252 | 4.06 | 288 |
| 54" | 5'-4 7/8" | 3' | 4'-6" | 5' | 2.41 | 190 | 3.07 | 246 | 12'-8' | 4.24 | 319 | 5.06 | 368 |
| 60" | 6'-3 3/4" | 3'-6" | 5'-3" | 5'-6" | 2.88 | 239 | 3.75 | 294 | 14' | 5.13 | 386 | 6.17 | 442 |
| 66" | 7'-2 1/2" | 4' | 6' | 6' | 3.38 | 294 | 4.52 | 356 | 15'-4" | 6.08 | 454 | 7.20 | 516 |
| 72" | 8'-1 3/8" | 4'-6" | 6'-9" | 6'-6" | 3.93 | 368 | 5.52 | 417 | 16'-8" | 7.11 | 522 | 8.30 | 588 |
| 78" | 9' | 5' | 7'-6" | 7' | 4.50 | 444 | 6.70 | 503 | 18' | 8.20 | 595 | 9.50 | 693 |
| 84" | 9'-10 3/4" | 5'-6" | 8'-3" | 7'-6" | 5.21 | 540 | 8.15 | 619 | 19'-4" | 9.50 | 687 | 10.80 | 786 |

Note: Dimensions E and L apply to wing type only.

### NOTES

1. Skewed Pipes: Dimension W to be increased to take care of increased width or length due to skew of multiple pipes.
2. Top of headwall shall be placed approximately parallel to profile grade when the grade is 3% or more.
3. Concrete shall be 560-C-3250.
4. Exposed corners shall be 3/4" chamfered.
5. Multiple pipes shall be set a distance of D/2, with a 1' minimum, between outside diameters of pipes.
6. For pipe wall thickness greater than 3" use Alternate Detail C.

LEGEND ON PLANS

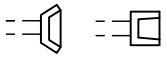

| Revision | By | Approved | Date |
|---|---|---|---|
| ORIGINAL | | Kercheval | 12/75 |
| Add Metric | | T. Stanton | 03/03 |
| Reformatted | | T. Stanton | 04/06 |
| Edited | | T. Stanton | 02/09 |
| Edited | S.S. | T. Regello | 03/11 |

**SAN DIEGO REGIONAL STANDARD DRAWING**

**WING AND U TYPE HEADWALLS FOR 42" TO 84" PIPE**

RECOMMENDED BY THE SAN DIEGO REGIONAL STANDARDS COMMITTEE

7/26/2012

Chairperson R.C.E. 19246 Date

DRAWING NUMBER **D-35B**

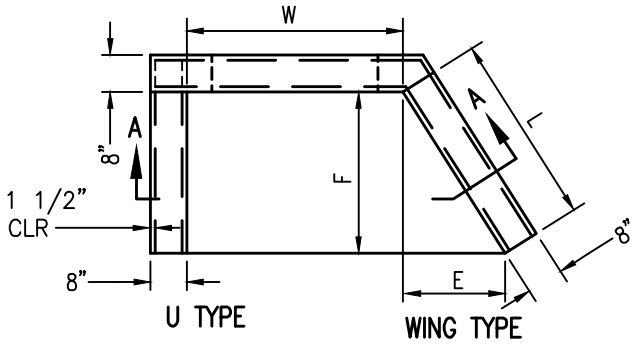


PLAN

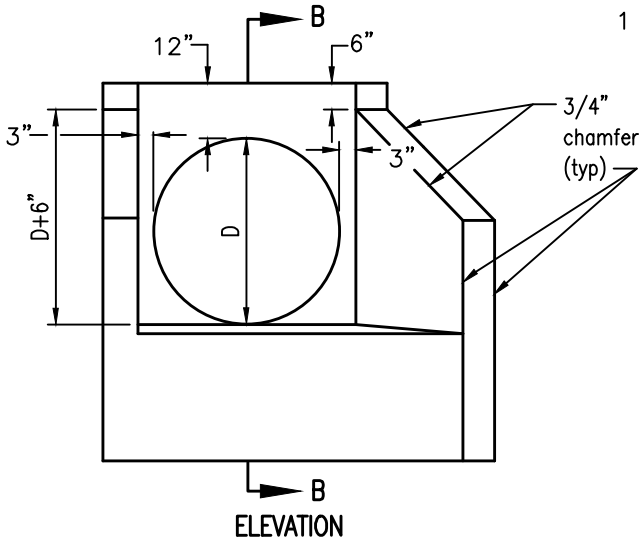


ELEVATION

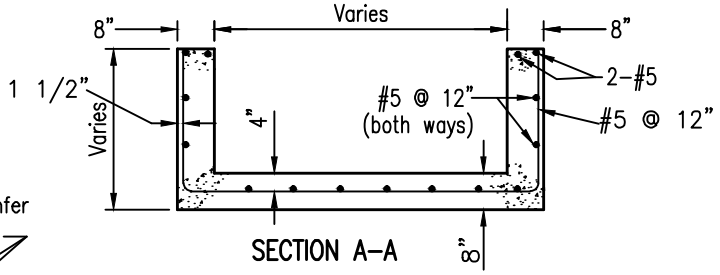


SECTION A–A

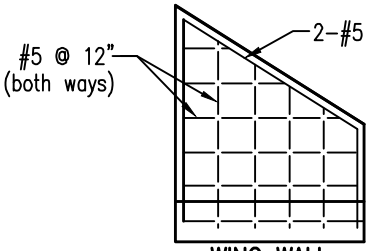


WING WALL
REINFORCING

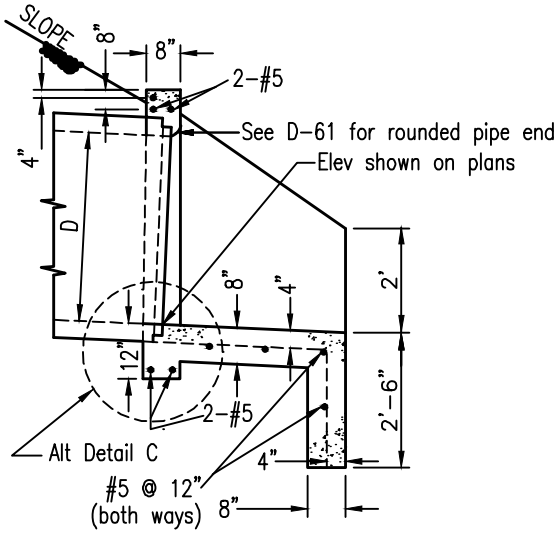


SECTION B–B

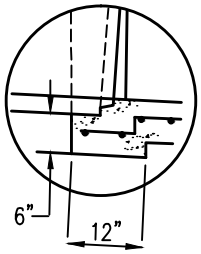


ALT DETAIL C

LEGEND ON PLANS

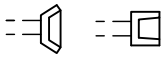

NOTE

See D–35B for Dimension Table and General Notes.

| Revision | By | Approved | Date |
|---|---|---|---|
| ORIGINAL | | Kercheval | 12/75 |
| Add Metric | | T. Stanton | 03/03 |
| Reformatted | | T. Stanton | 04/06 |
| Edited | | T. Stanton | 02/09 |
| Edited | S.S. | T. Regello | 03/11 |

SAN DIEGO REGIONAL STANDARD DRAWING

# WING AND U TYPE HEADWALLS FOR 42" TO 84" PIPE

RECOMMENDED BY THE SAN DIEGO REGIONAL STANDARDS COMMITTEE

7/26/2012

Chairperson R.C.E. 19246 Date

DRAWING NUMBER **D-35A**

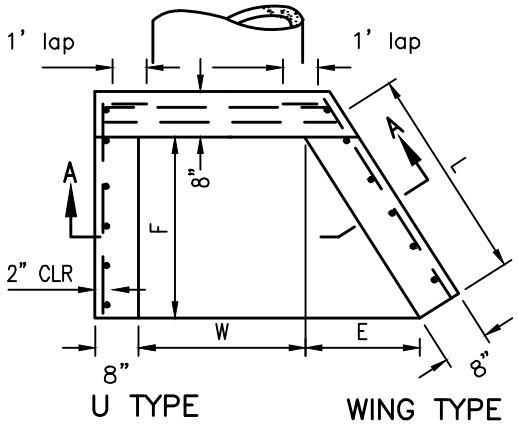


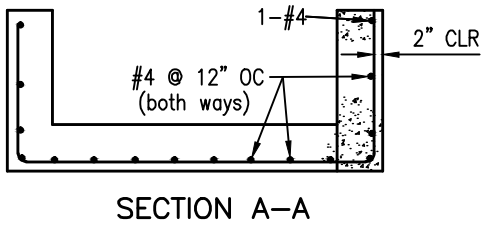


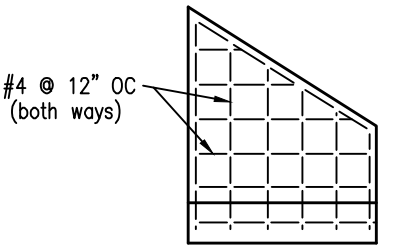


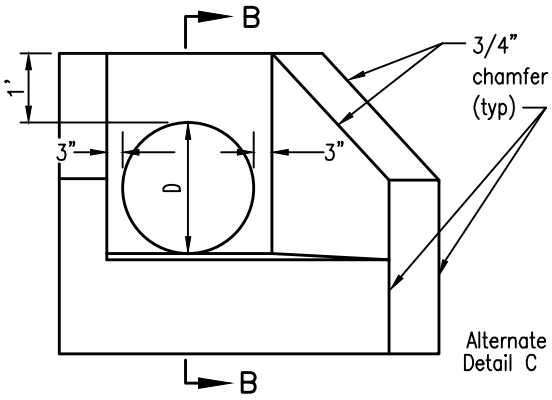


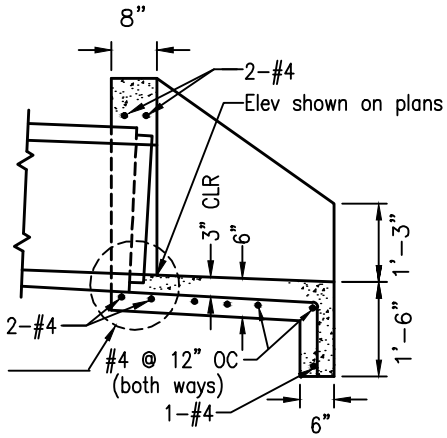


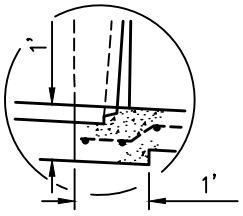


| DIA OF PIPE | DIMENSIONS | | | SINGLE PIPE | | | | | DOUBLE PIPE | | | | |
|---|---|---|---|---|---|---|---|---|---|---|---|---|---|
| | | | | | U TYPE | | WING TYPE | | | U TYPE | | WING TYPE | |
| | L | E | F | W | CONC. (CY) | STEEL (LBS) | CONC. (CY) | STEEL (LBS) | W | CONC. (CY) | STEEL (LBS) | CONC. (CY) | STEEL (LBS) |
| 18" | 2'-3 1/8" | 1'-3" | 1'-10 1/2" | 2' | 0.55 | 35 | 0.63 | 43 | AS SHOWN ON PLANS | 0.82 | 53 | 0.90 | 61 |
| 24" | 3'-1 7/8" | 1'-9" | 2'-7 1/2" | 2'-6" | 0.79 | 47 | 0.93 | 60 | | 1.22 | 73 | 1.36 | 86 |
| 30" | 4'-5/8" | 2'-3" | 3'-4 1/2" | 3' | 1.05 | 71 | 1.29 | 85 | | 1.66 | 109 | 1.92 | 123 |
| 36" | 4'-11 1/2" | 2'-9" | 4'-1 1/2" | 3'-6" | 1.33 | 88 | 1.69 | 114 | | 2.19 | 136 | 2.55 | 162 |

## NOTES

1. Concrete shall be 560-C-3250.
2. Exposed corners to be 3/4" chamfered.
3. Multiple pipes to be set a distance of D/2, with a 1' minimum between outside diameters of pipes.
4. Top of headwall shall be placed approximately parallel to profile grade when the grade is 3% or more.
5. Skewed pipes: Dimension W to be increased in width or length due to skew or multiple pipes.
6. For pipe wall thickness greater than 3" use Alternate Detail C.

LEGEND ON PLANS

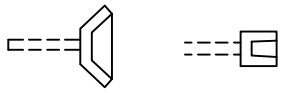

| Revision | By | Approved | Date |
|---|---|---|---|
| ORIGINAL | | Kercheval | 12/75 |
| Add Metric | | T. Stanton | 03/03 |
| Reformatted | | T. Stanton | 04/06 |
| Edited | | T. Stanton | 02/09 |
| Edited | S.S. | T. Regello | 03/11 |

SAN DIEGO REGIONAL STANDARD DRAWING

# WING AND U TYPE HEADWALLS FOR 18" TO 36" PIPES

RECOMMENDED BY THE SAN DIEGO REGIONAL STANDARDS COMMITTEE

7/26/2012

Chairperson R.C.E. 19246 Date

DRAWING NUMBER **D-34**

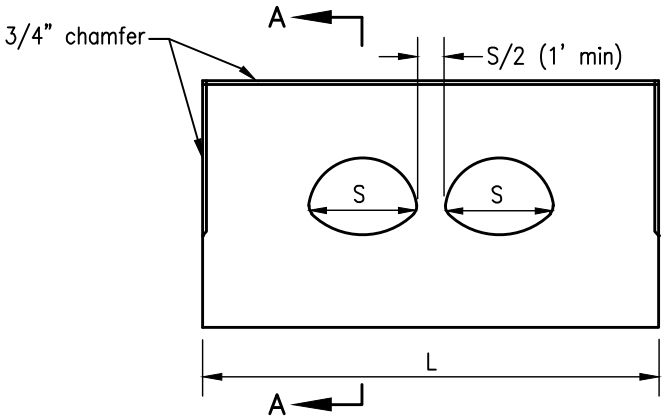


DOUBLE PIPE ELEVATION

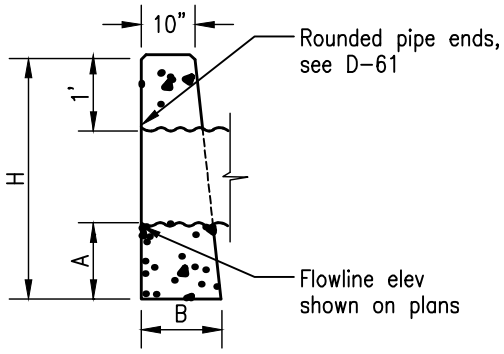


SECTION A–A

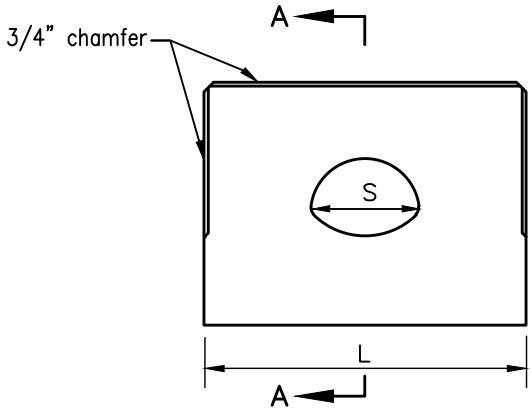


SINGLE PIPE ELEVATION

| CSP ARCH SIZE | A | B | H | SINGLE | | DOUBLE | |
|---|---|---|---|---|---|---|---|
| | | | | L | Concrete CY | L | Concrete CY |
| 18" x 11" | 2' | 1'–2" | 3'–11" | 6' | 0.83 | 7'–3" | 0.97 |
| 21" x 15" | 2' | 1'–4" | 4'–3" | 7' | 1.08 | 9'–8" | 1.46 |
| 24" x 18" | 2' | 1'–6" | 4'–6" | 8' | 1.41 | 11'–6" | 1.98 |
| 28" x 20" | 2'–6" | 1'–8" | 5'–2" | 9' | 1.97 | 12'–6" | 2.66 |
| 35" x 24" | 2'–6" | 2' | 5'–6" | 10' | 2.56 | 14'–5" | 3.60 |

NOTES

1. Concrete shall be 560–C–3250.
2. Exposed corners to be 3/4" chamfered.

LEGEND ON PLANS

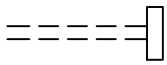

| Revision | By | Approved | Date |
|---|---|---|---|
| ORIGINAL | | Kercheval | 12/75 |
| Add Metric | | T. Stanton | 03/03 |
| Reformatted | | T. Stanton | 04/06 |
| Edited | | T. Stanton | 02/09 |
| Edited | S.S. | T. Regello | 03/11 |

SAN DIEGO REGIONAL STANDARD DRAWING

# STRAIGHT HEADWALL - TYPE B (CORRUGATED STEEL PIPE - ARCH)

RECOMMENDED BY THE SAN DIEGO REGIONAL STANDARDS COMMITTEE

7/26/2012

Chairperson R.C.E. 19246 Date

DRAWING NUMBER D-33

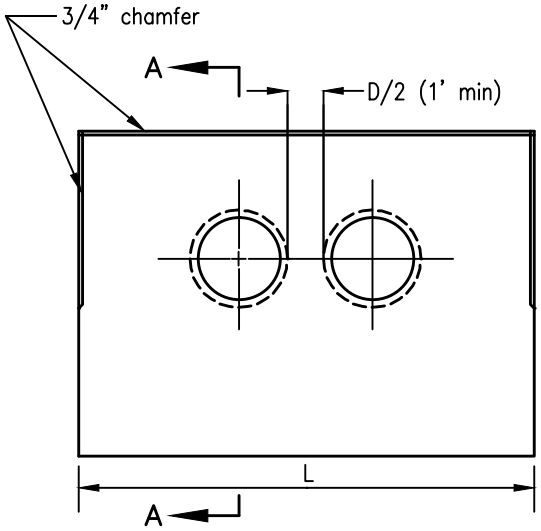


DOUBLE PIPE ELEVATION

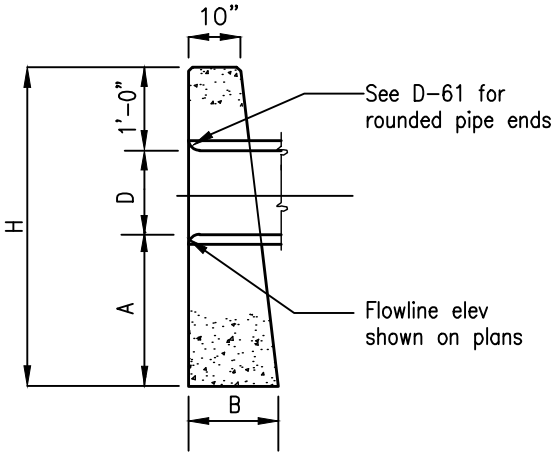


SECTION A–A

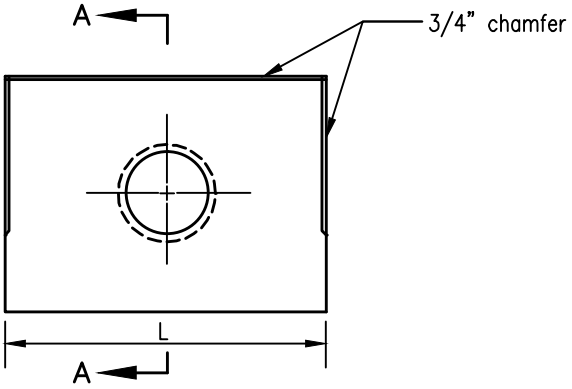


SINGLE PIPE ELEVATION

| D | A | B | H | SINGLE | | DOUBLE | |
|---|---|---|---|---|---|---|---|
| | | | | L | Concrete C.Y. | L | Concrete C.Y. |
| 12" | 2' | 1' | 4' | 4' | 0.45 | 5'-8" | .62 |
| 15" | 2' | 1'-1" | 4'-3" | 5' | 0.63 | 7'-1" | .85 |
| 18" | 2' | 1'-2" | 4'-6" | 6' | 0.83 | 8'-6" | 1.12 |
| 24" | 2'-6" | 1'-5" | 5'-6" | 8' | 1.54 | 11'-4" | 2.09 |
| 30" | 2'-6" | 1'-9" | 6' | 10' | 2.41 | 14'-2" | 3.26 |
| 36" | 3' | 2' | 7' | 12' | 3.74 | 17' | 5.05 |

## NOTES

1. Concrete shall be 560-C-3250.
2. Exposed corners shall be 3/4" chamfered.

LEGEND ON PLANS

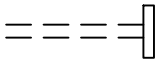

| Revision | By | Approved | Date |
|---|---|---|---|
| ORIGINAL | | Kercheval | 12/75 |
| Add Metric | | T. Stanton | 03/03 |
| Reformatted | | T. Stanton | 04/06 |
| Edited | | T. Stanton | 02/09 |
| Edited | S.S. | T. Regello | 03/11 |

SAN DIEGO REGIONAL STANDARD DRAWING

# STRAIGHT HEADWALL - TYPE B (CIRCULAR PIPE)

RECOMMENDED BY THE SAN DIEGO REGIONAL STANDARDS COMMITTEE

7/26/2012

Chairperson R.C.E. 19246 Date

DRAWING NUMBER D-32

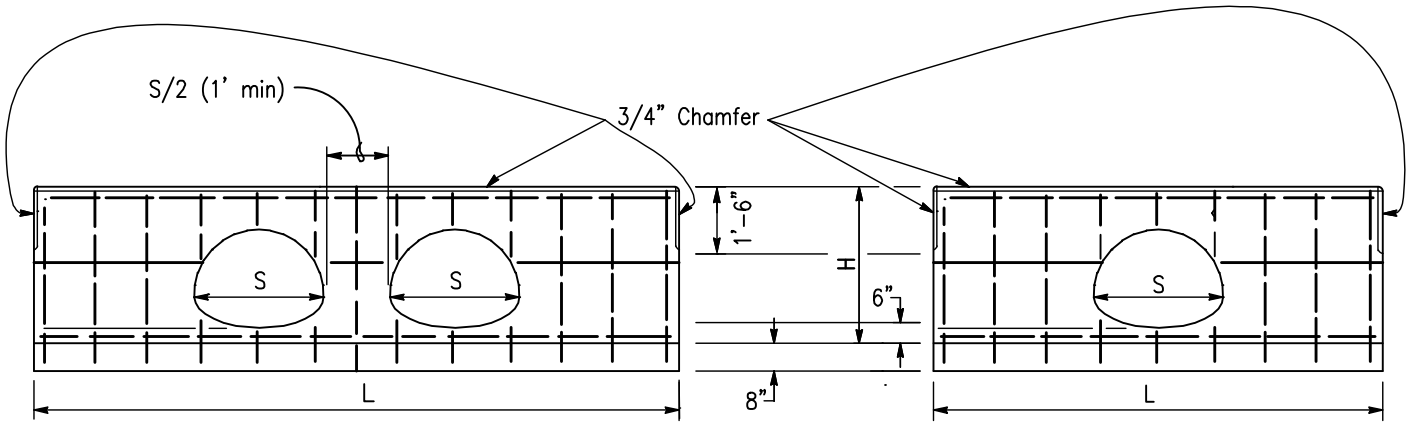


ELEVATION – DOUBLE HEADWALL

ELEVATION – SINGLE HEADWALL

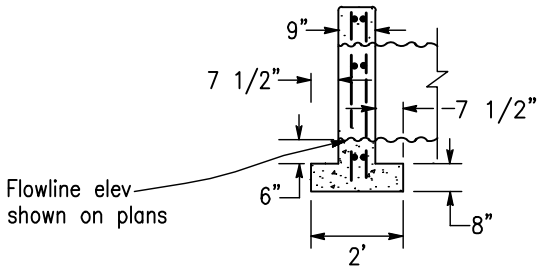


SECTION, SINGLE &
DOUBLE HEADWALLS

| C.S.P. ARCH SIZE inches | SINGLE | | | | DOUBLE | | |
|---|---|---|---|---|---|---|---|
| | H ft/in | L ft/in | Steel Lbs. | Concrete C.Y. | L ft/in | Steel Lbs. | Concrete C.Y. |
| 18x11 | 2'–7" | 5'–6" | 37 | 0.64 | 8' | 52 | 0.91 |
| 21x15 | 2'–11" | 6'–6" | 45 | 0.80 | 10' | 60 | 1.22 |
| 24x18 | 3'–2" | 7'–6" | 50 | 0.96 | 11'–6" | 70 | 1.45 |
| 28x20 | 3'–4" | 8'–6" | 60 | 1.12 | 13'–6" | 90 | 1.76 |
| 35x24 | 3'–8" | 10'–6" | 85 | 1.47 | 15'–6" | 120 | 2.16 |
| 42x29 | 4'–1" | 12'–6" | 110 | 1.76 | 18' | 145 | 2.57 |
| 49x33 | 4'–5" | 14'–6" | 130 | 2.26 | 21' | 170 | 3.13 |
| 57x38 | 4'–10" | 17' | 155 | 2.81 | 24'–6" | 210 | 3.86 |
| 64x43 | 5'–3" | 19' | 175 | 3.31 | 27' | 230 | 4.42 |
| 71x47 | 5'–7" | 21' | 195 | 3.81 | 30' | 255 | 5.09 |

## NOTES

1. Concrete shall be 560–C–3250.
2. All reinforcing shall be #4 bars. All vertical and horizontal tie bars @ 18" maximum spacing.
3. Exposed corners shall be 3/4" chamfered.

**LEGEND ON PLANS**

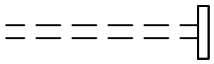

| Revision | By | Approved | Date |
|---|---|---|---|
| ORIGINAL | | Kercheval | 12/75 |
| Add Metric | | T. Stanton | 03/03 |
| Reformatted | | T. Stanton | 04/06 |
| Edited | | T. Stanton | 02/09 |
| Edited | S.S. | T. Regello | 03/11 |

**SAN DIEGO REGIONAL STANDARD DRAWING**

# STRAIGHT HEADWALL - TYPE A (CORRUGATED STEEL PIPE - ARCH)

RECOMMENDED BY THE SAN DIEGO REGIONAL STANDARDS COMMITTEE

7/26/2012

Chairperson R.C.E. 19246 Date

DRAWING NUMBER **D-31**

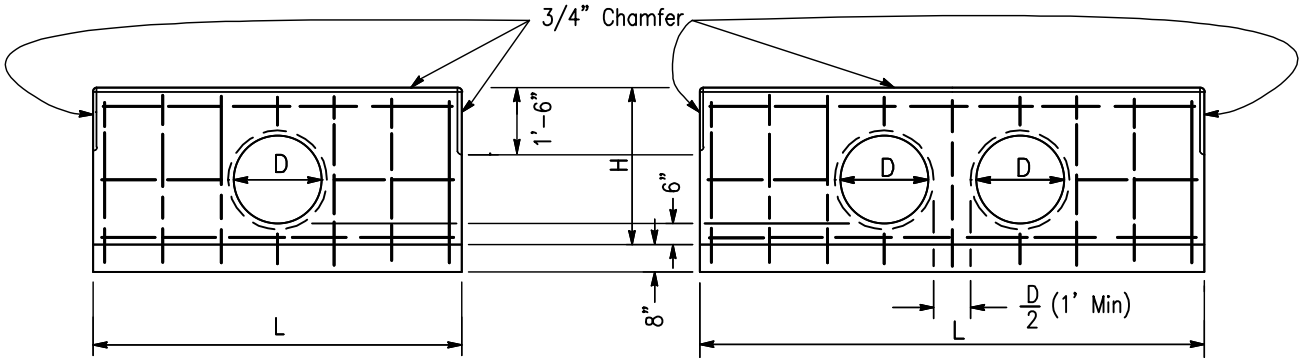


FRONT ELEVATION
SINGLE HEADWALL

FRONT ELEVATION
DOUBLE HEADWALL

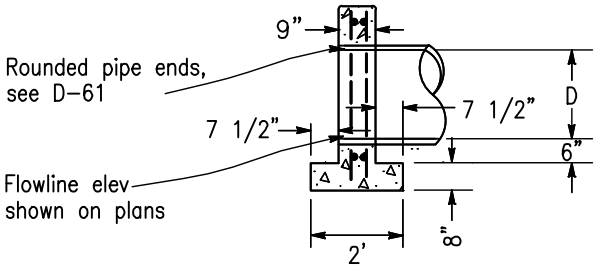


SECTION, SINGLE &
DOUBLE HEADWALLS

| D | H | SINGLE | | | DOUBLE | | |
|---|---|---|---|---|---|---|---|
| | | L | Steel Lbs. | Concrete C.Y. | L | Steel Lbs. | Concrete C.Y. |
| 12" | 2'-8" | 5' | 35 | 0.60 | 8' | 50 | 0.94 |
| 15" | 2'-11" | 6' | 40 | 0.75 | 9'-6" | 60 | 1.17 |
| 18" | 3'-2" | 7' | 50 | 0.91 | 10'-6" | 75 | 1.35 |
| 21" | 3'-5" | 7'-6" | 60 | 1.02 | 11'-6" | 90 | 1.52 |
| 24" | 3'-8" | 8'-6" | 75 | 1.20 | 12'-6" | 100 | 1.72 |
| 27" | 3'-11" | 9'-6" | 85 | 1.39 | 14' | 115 | 2.00 |
| 30" | 4'-2" | 10' | 85 | 1.52 | 15' | 126 | 2.21 |
| 33" | 4'-5" | 11' | 100 | 1.73 | 16' | 130 | 2.42 |
| 36" | 4'-8" | 12' | 105 | 1.95 | 17' | 145 | 2.65 |
| 39" | 4'-11" | 12'-6" | 130 | 2.09 | 18' | 170 | 2.88 |
| 42" | 5'-2" | 13'-6" | 140 | 2.34 | 19' | 185 | 3.13 |
| 45" | 5'-5" | 14'-6" | 150 | 2.60 | 20' | 195 | 3.38 |
| 48" | 5'-8" | 15' | 160 | 2.75 | 21' | 200 | 3.64 |
| 51" | 5'-11" | 16' | 180 | 3.03 | 22'-6" | 225 | 4.02 |
| 54" | 6'-2" | 17' | 190 | 3.31 | 23'-6" | 240 | 4.30 |

## NOTES

1. Concrete shall be 560-C-3250.
2. All reinforcing shall be #4 bars. All vertical and horizontal tie bars @ 18" maximum spacing.
3. Exposed corners shall be 3/4" chamfered.

LEGEND ON PLANS

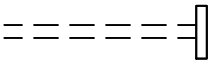

| Revision | By | Approved | Date |
|---|---|---|---|
| ORIGINAL | | Kercheval | 12/75 |
| Add Metric | | T. Stanton | 03/03 |
| Reformatted | | T. Stanton | 04/06 |
| Edited | | T. Stanton | 02/09 |
| Edited | S.S. | T. Regello | 03/11 |

SAN DIEGO REGIONAL STANDARD DRAWING

# STRAIGHT HEADWALL - TYPE A (CIRCULAR PIPE)

RECOMMENDED BY THE SAN DIEGO REGIONAL STANDARDS COMMITTEE

7/26/2012

Chairperson R.C.E. 19246 Date

DRAWING NUMBER D-30

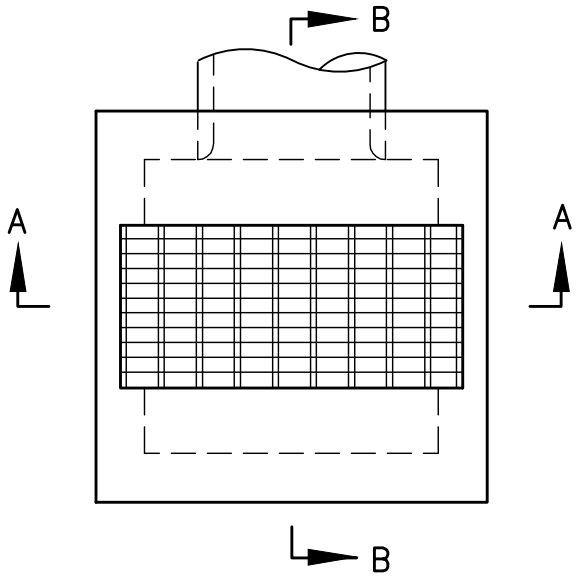


PLAN

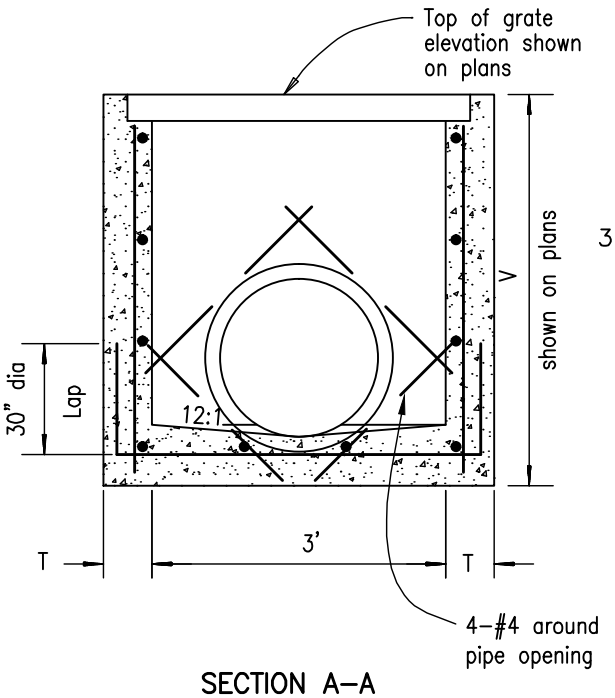


SECTION A–A

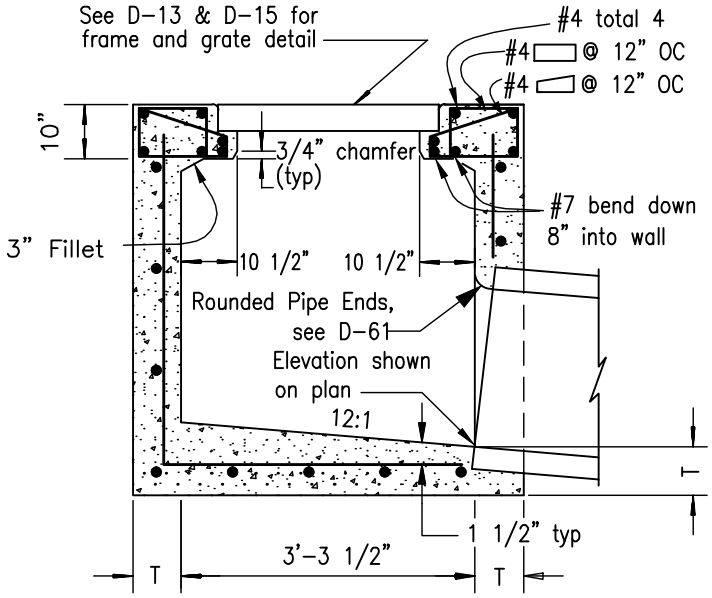


SECTION B–B

## NOTES

1. See D-11A & D-11B for additional notes and details.
2. When V exceeds 4', steps shall be installed per D-11A.

## LEGEND ON PLANS

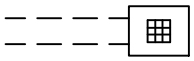

| Revision | By | Approved | Date |
|---|---|---|---|
| ORIGINAL | | Solomon | 7/79 |
| Add Metric | | T. Stanton | 03/03 |
| Reformatted | | T. Stanton | 04/06 |
| Edited | S.S. | T. Regello | 03/11 |
| | | | |

**SAN DIEGO REGIONAL STANDARD DRAWING**

# CATCH BASIN - TYPE I

RECOMMENDED BY THE SAN DIEGO REGIONAL STANDARDS COMMITTEE

T. Stanton 7/26/2012

Chairperson R.C.E. 19246 Date

DRAWING NUMBER **D-29**

FOR DRAWINGS D-11A AND D-11B, SEE DRAWING SDD-114

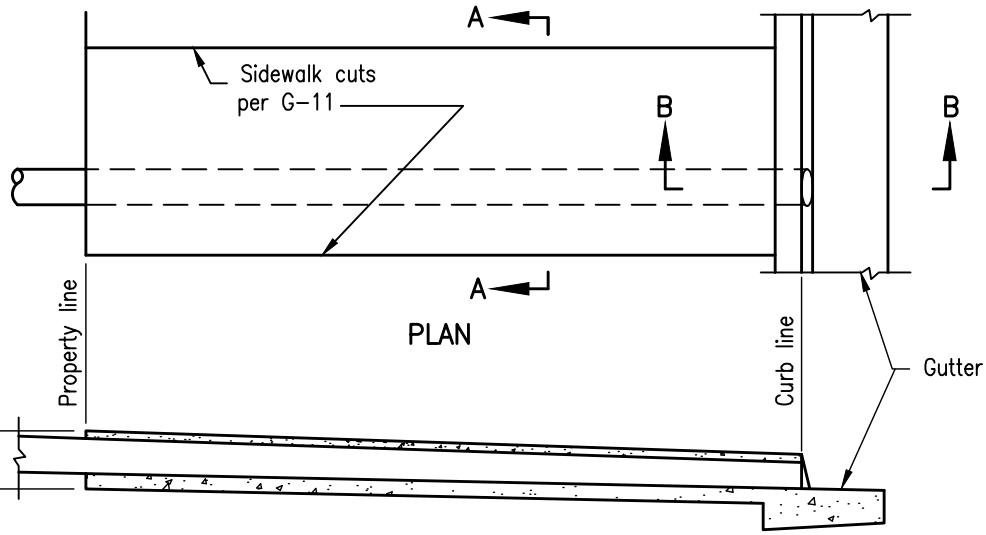


SECTION

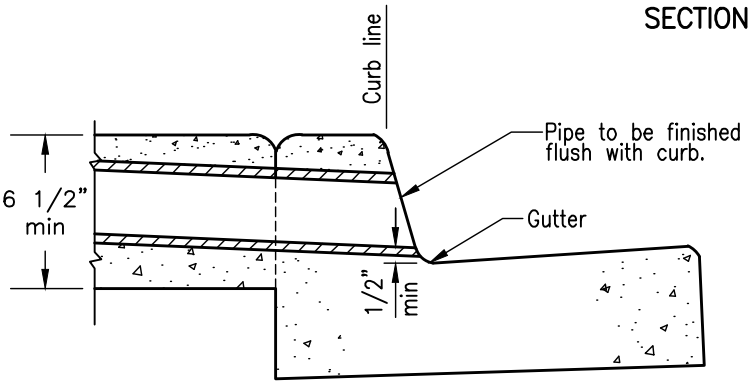


SECTION B–B

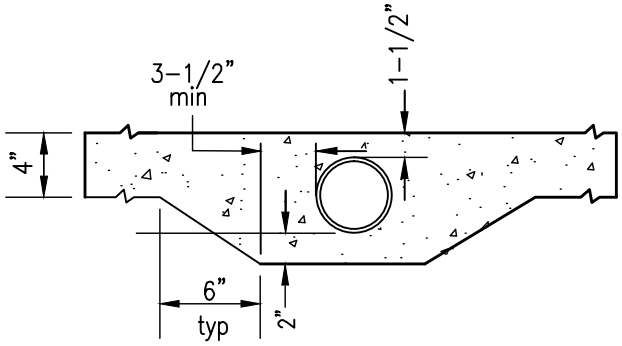


SECTION A–A

| APPROVED DRAIN PIPE SIZES | |
|---|---|
| PIPE SIZE | CURB HEIGHT AT CURB FACE |
| 3" | 6" to 8" |
| 4" | 8" |
| 6" | 10" |

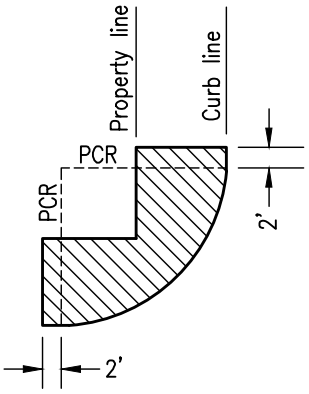


Drain shall not occupy
the hatched area

BLOCK CORNER

## NOTES

1. Pipe shall be one continuous length from property line to curb line.
2. Multiple pipes to be set a minimum distance of D/2 apart (3 max).
3. Concrete shall be 520–C–2500.
4. Pipe shall be circular rigid plastic, or approved equal.
5. Coring of existing curb may be used as an alternative.
6. Provide 1/4" tooled groove in top slab in line with back of adjacent curb.

| Revision | By | Approved | Date |
|---|---|---|---|
| ORIGINAL | | Kercheval | 12/75 |
| Add Metric | | T.Stanton | 03/03 |
| Reformatted | | T.Stanton | 04/06 |
| Edited | S.S. | T. Regello | 03/11 |
| | | | |

**SAN DIEGO REGIONAL STANDARD DRAWING**

# SIDEWALK UNDERDRAIN PIPE

RECOMMENDED BY THE SAN DIEGO REGIONAL STANDARDS COMMITTEE

7/26/2012

Chairperson R.C.E. 19246 Date

DRAWING NUMBER **D-27**

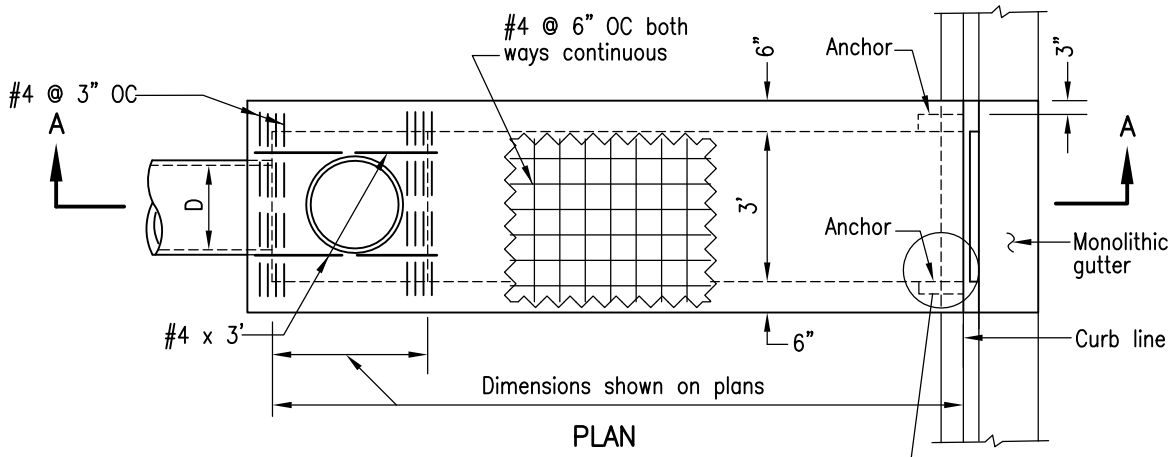


PLAN

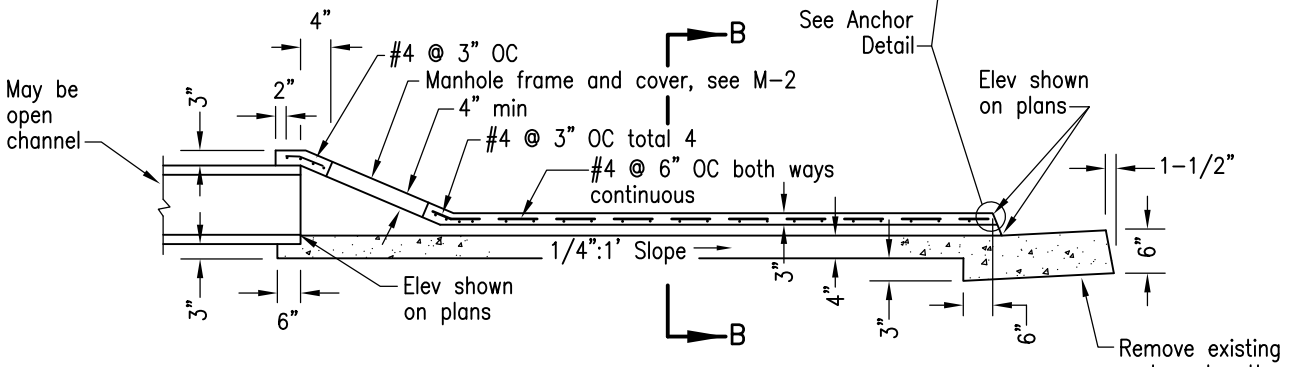


SECTION A–A

Remove existing curb and gutter and construct gutter monolithic with curb outlet

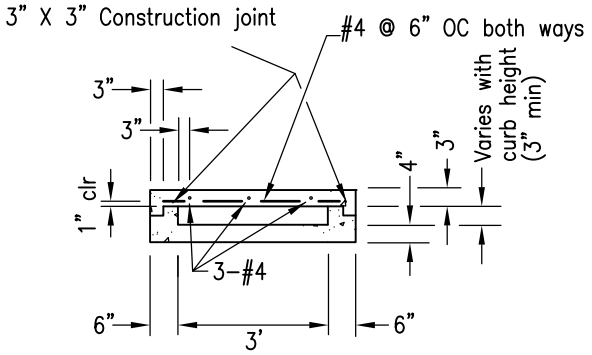


SECTION B–B

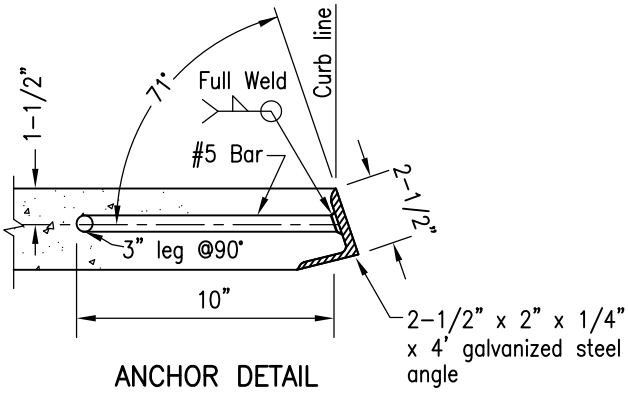


ANCHOR DETAIL

## NOTES

1. Concrete shall be 560–C–3250.
2. D=inside diameter of pipe or depth of channel.
3. Section to be sloped laterally with top conforming to the grades of the existing sidewalk and curb.
4. Manhole frame and cover may be deleted with open channel.
5. Trowel finish top surface and reproduce markings of existing sidewalk and curb.
6. Trowel finish floor of outlet.
7. Provide 1/4" tooled groove in top slab in line with back of curb.

LEGEND ON PLANS

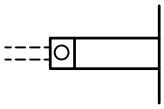

| Revision | By | Approved | Date |
|---|---|---|---|
| ORIGINAL | | Kercheval | 12/75 |
| Add Metric | | T.Stanton | 03/03 |
| Reformatted | | T.Stanton | 04/06 |
| Revised | | T.Stanton | 11/08 |
| Edited | S.S. | T. Regello | 03/11 |

SAN DIEGO REGIONAL STANDARD DRAWING

# CURB OUTLET - TYPE A

RECOMMENDED BY THE SAN DIEGO REGIONAL STANDARDS COMMITTEE

7/26/2012

Chairperson R.C.E. 19246 Date

DRAWING NUMBER **D-25**

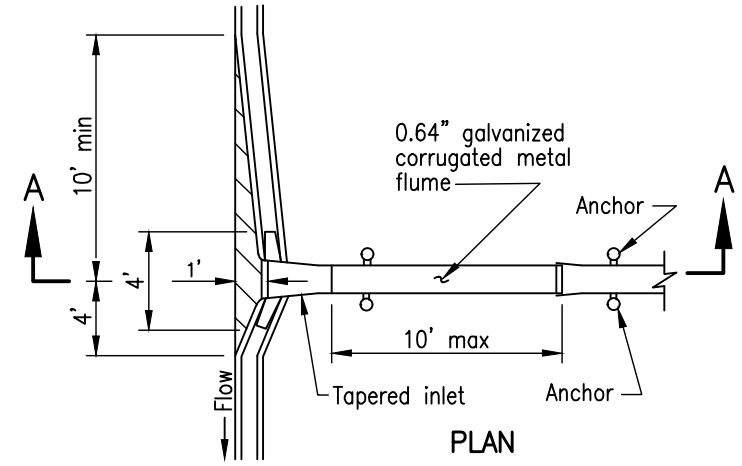


PLAN

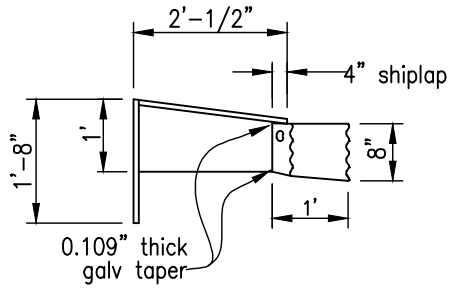


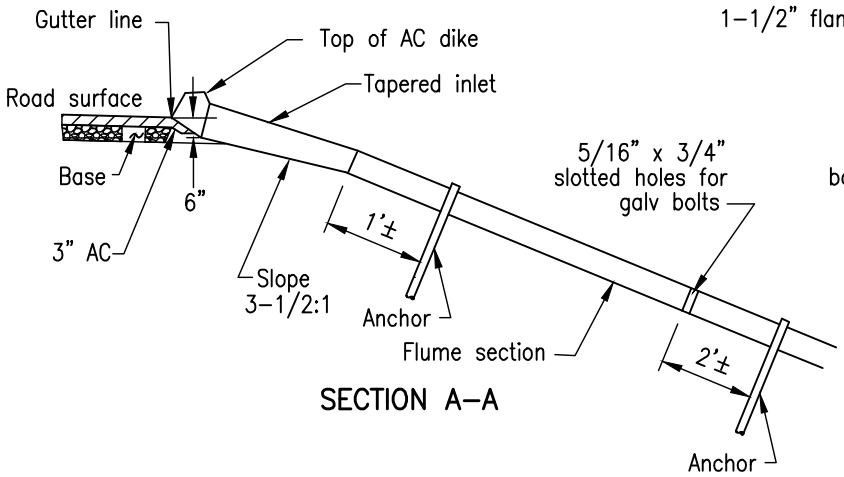


SECTION A–A

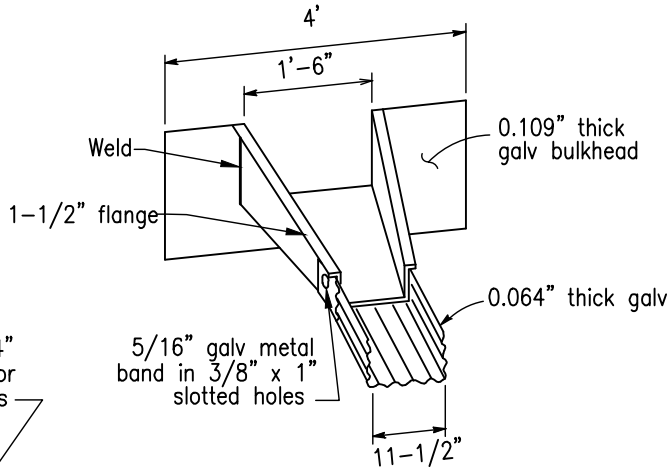


TAPERED INLET

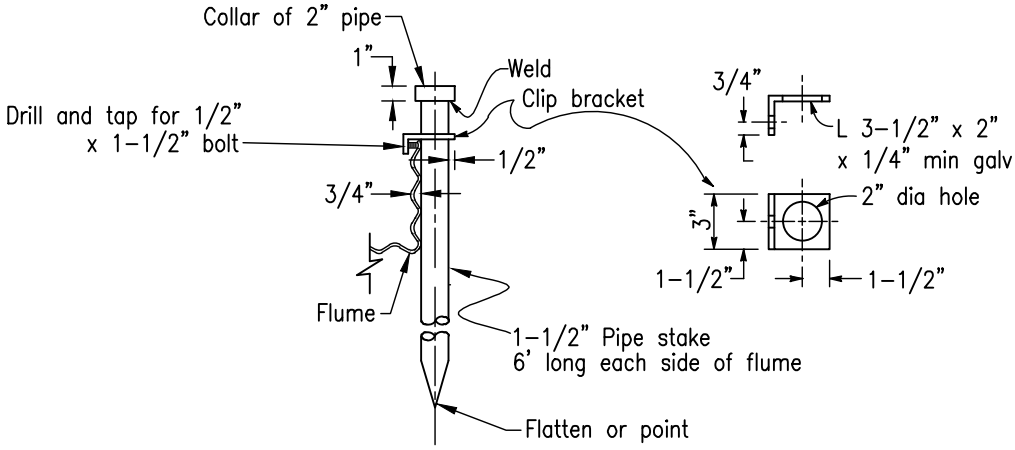


ANCHOR–DETAIL

## NOTES

1. Downdrain flume may be used where fill slope is 1 1/2:1 or flatter.
2. Use 10' min length of gutter transition on each side of downdrain in sag condition.
3. All metal parts to be galvanized after fabrication.

LEGEND ON PLANS

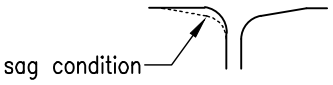


| Revision | By | Approved | Date |
|---|---|---|---|
| ORIGINAL | | Kercheval | 12/75 |
| Add Metric | | T. Stanton | 03/03 |
| Reformatted | | T. Stanton | 04/06 |
| Edited | | T. Stanton | 02/09 |
| Edited | S.S. | T. Regello | 03/11 |

SAN DIEGO REGIONAL STANDARD DRAWING

# TAPERED INLET AND DOWNDRAIN FLUME

RECOMMENDED BY THE SAN DIEGO REGIONAL STANDARDS COMMITTEE

7/26/2012

Chairperson R.C.E. 19246 Date

DRAWING NUMBER **D-23**

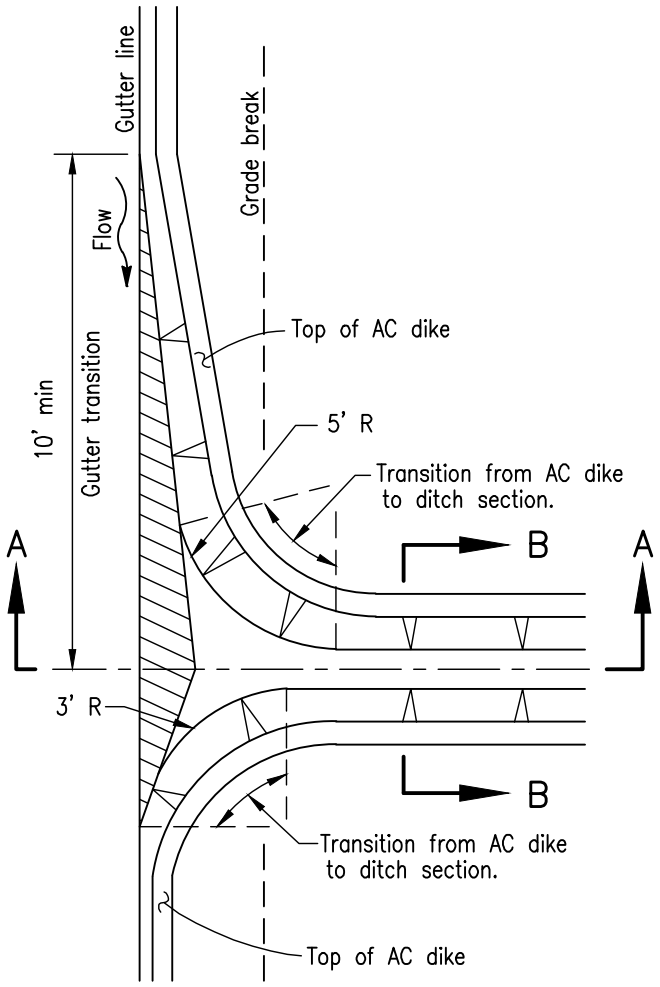


PLAN

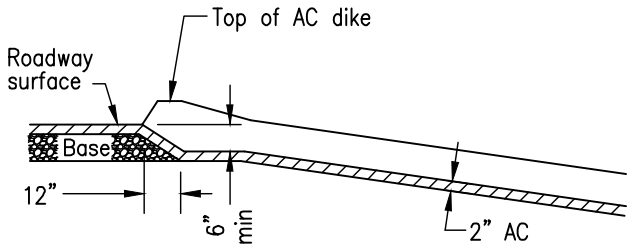


SECTION A–A

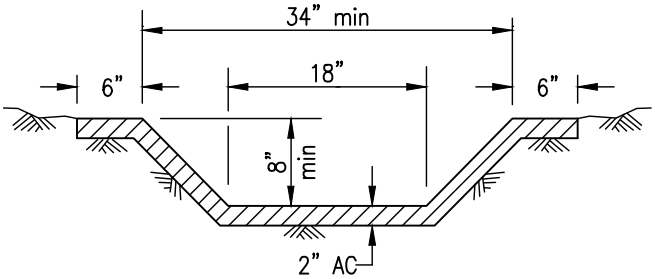


SECTION B–B

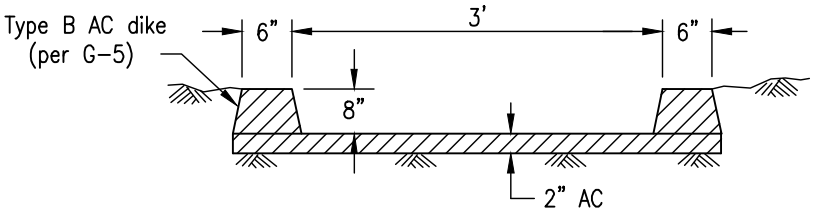


ALTERNATE SECTION B–B

## NOTES

1. AC spillway may be used when fill is 10' or less, and where fill slope 1–1/2:1 or flatter.
2. Use 10' min length of gutter transition on each side of downdrain in sag condition.
3. Cross sectional area of ditch (Section B–B) may be trapezoidal or semi–circular; semi–circular sectional area must provide an equal flow capacity as trapezoidal.

LEGEND ON PLANS

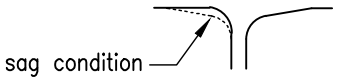


| Revision | By | Approved | Date |
|---|---|---|---|
| ORIGINAL | | Kercheval | 12/75 |
| Add Metric | | T. Stanton | 03/03 |
| Reformatted | | T. Stanton | 04/06 |
| Edited | | T. Stanton | 02/09 |
| Edited | S.S. | T. Regello | 03/11 |

SAN DIEGO REGIONAL STANDARD DRAWING

# ASPHALT CONCRETE SPILLWAY

RECOMMENDED BY THE SAN DIEGO REGIONAL STANDARDS COMMITTEE

7/26/2012

Chairperson R.C.E. 19246 Date

DRAWING NUMBER **D-22**

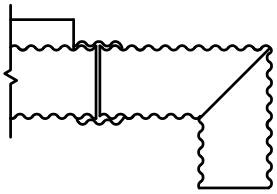

ELBOW

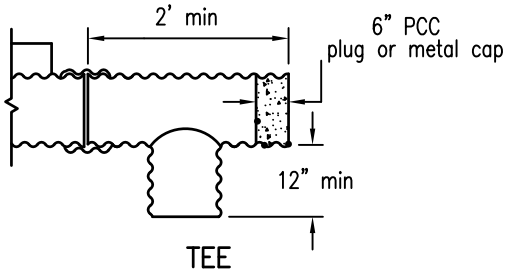


TEE

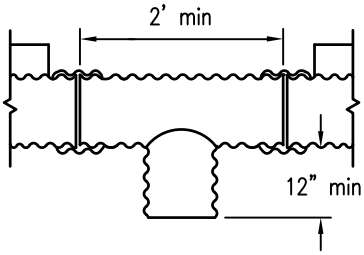


TEE–SAG CONDITION

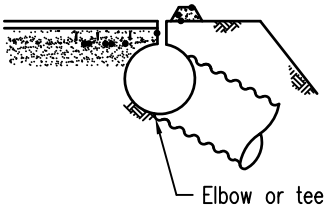


OVERSIDE DRAIN

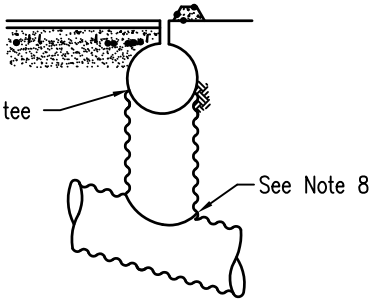


RISER

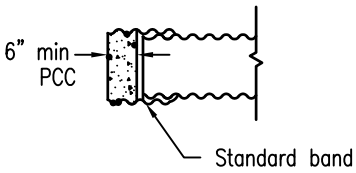


BAND PLUG

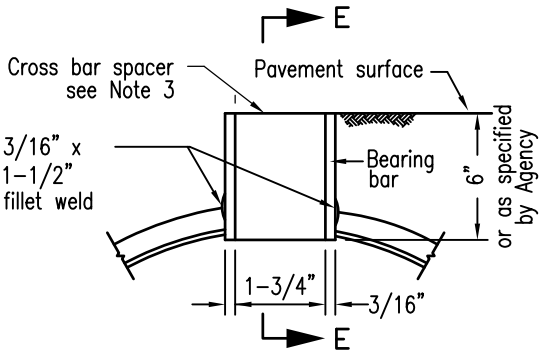


SECTION D–D
GRATE SLOT DETAIL

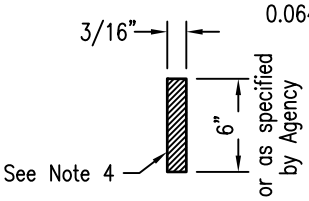


SECTION E–E

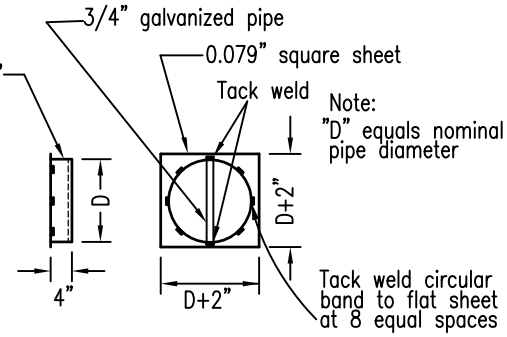


METAL CAP DETAIL

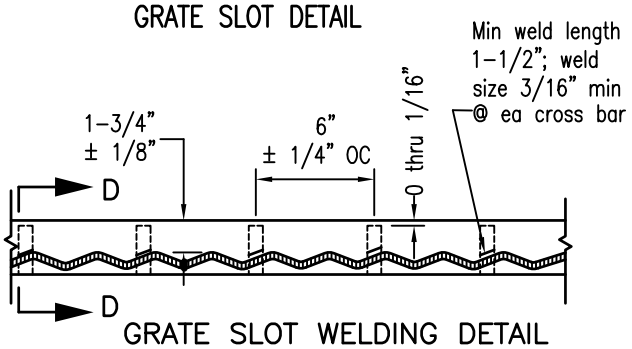


GRATE SLOT WELDING DETAIL

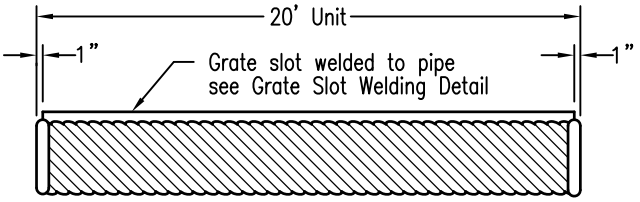


GRATE SLOT DRAIN

## NOTES

1. Drain seams may be constructed by riveting or resistance spot–welding, continuous helical lock seam or helical welding seam at equal centers.
2. Each drain section shall be assembled with standard coupling bands.
3. Cross bar spacer of grate shall be pressure fused or plug welded to bearing bars in such a manner as to develop the strength of the cross bar spacer.
4. Cross bar spacer (Section E–E) may differ from that shown provided section area is equal or greater.
5. Grate material shall be a weldable grade of steel complying to the requirements of ASTM A 36.
6. The maximum variance from a straight line from the extreme top corners of the bearing bar shall be 1/2" in 20'.
7. Installation lengths shall be 10' or multiples thereof.
8. Either field joint sealed with a pliable mixture of sand, portland cement and emulsified asphalt (Mixture of 1 part portland cement, 3 – 5 parts sand and 1–1/2 parts SSI emulsified asphalt), or continuous weld.

| Revision | By | Approved | Date |
|---|---|---|---|
| ORIGINAL | | Kercheval | 12/75 |
| Add Metric | | T. Stanton | 03/03 |
| Reformatted | | T. Stanton | 04/06 |
| Edited | | T. Stanton | 02/09 |
| Edited | S.S. | T. Regello | 03/11 |

**SAN DIEGO REGIONAL STANDARD DRAWING**

**SLOTTED CORRUGATED STEEL PIPE DRAINS**
**12" THROUGH 24"**

RECOMMENDED BY THE SAN DIEGO REGIONAL STANDARDS COMMITTEE

T. Stanton 7/26/2012

Chairperson R.C.E. 19246 Date

DRAWING NUMBER **D-18**

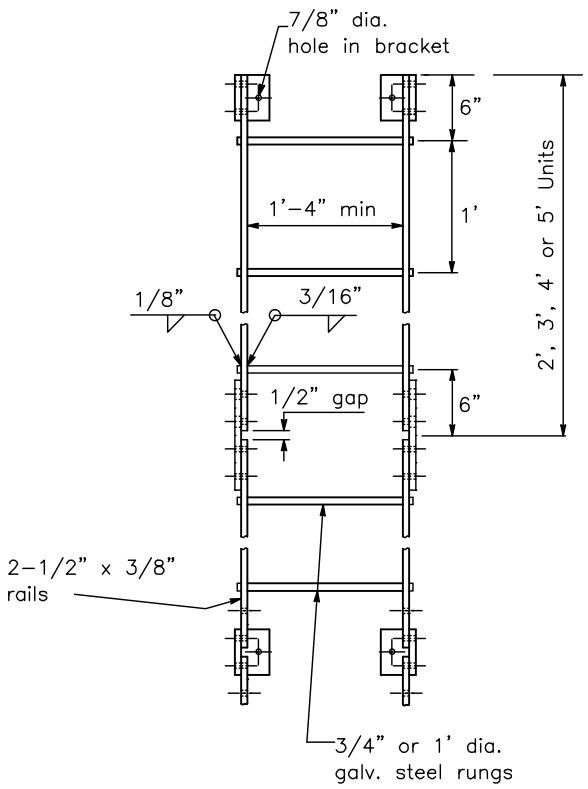


FRONT VIEW

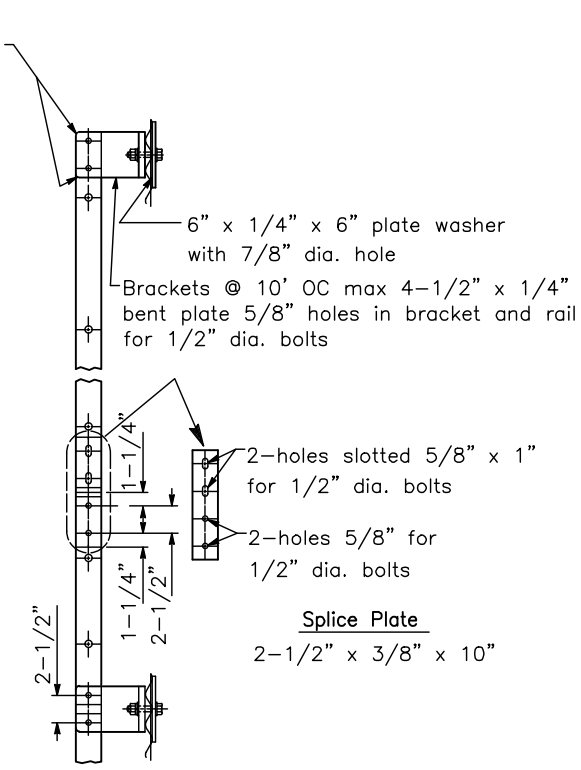


SIDE VIEW

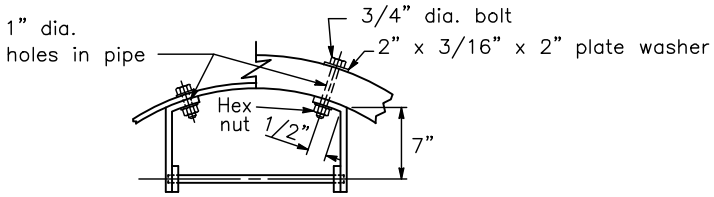


LADDER DETAIL
H=5' or greater

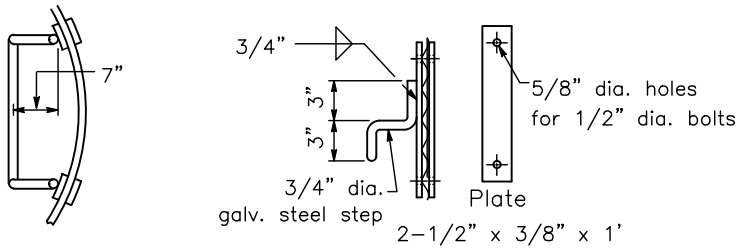


STEP DETAIL
H=3'-6" to 4'-11"

## NOTE

See Note 3 on D-16 for ladder requirements.

| Revision | By | Approved | Date |
|---|---|---|---|
| ORIGINAL | | Kercheval | 12/75 |
| Add Metric | | T. Stanton | 03/03 |
| Reformatted | | T. Stanton | 04/06 |
| Edited | | T. Stanton | 02/09 |
| Edited | S.S. | T. Regello | 03/11 |

**SAN DIEGO REGIONAL STANDARD DRAWING**

# CORRUGATED STEEL PIPE INLETS, DETAILS

RECOMMENDED BY THE SAN DIEGO REGIONAL STANDARDS COMMITTEE

7/26/2012

Chairperson R.C.E. 19246 Date

DRAWING NUMBER **D-17B**

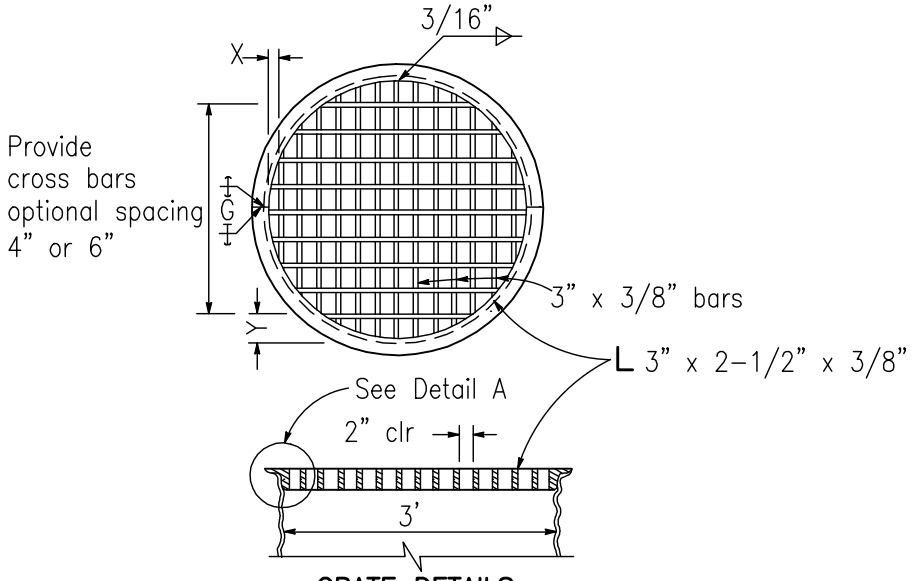


GRATE DETAILS

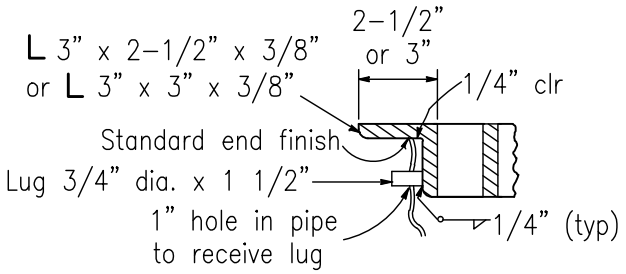


DETAIL A

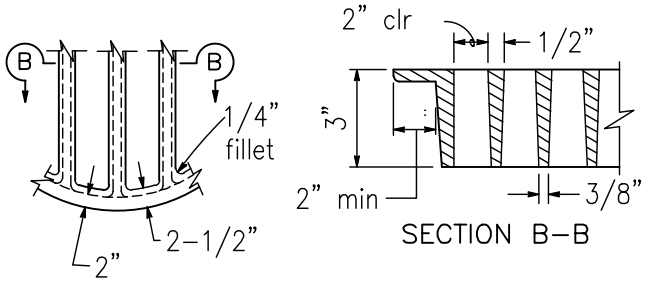


SECTION B–B

ALTERNATIVE CAST NODULAR IRON GRATE
OR CAST STEEL GRATE

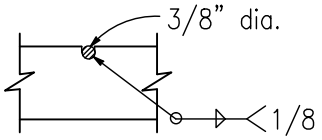


3/8" dia. cross bars may be fillet welded, resistance welded or electroforged to bearing bars.

CROSS BAR DETAIL TYPE
WELDED STEEL GRATE

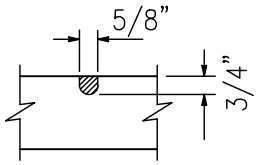


CROSS BAR DETAIL
ALTERNATIVE CAST NODULAR
IRON GRATE OR CAST STEEL GRATE

GRATE BAR SPACING TABLE

| TYPE | NO. OF BARS | CLEAR BAR SPACING | X | Y | |
|---|---|---|---|---|---|
| | | | | 4" SPACING | 6" SPACING |
| Welded Steel | 15 | 2" | 9/16" | 3-3/4" | 5-3/4" |
| Cast | 13 | 2" | 2-1/8" | 3-3/4" | 5-3/4" |

| Revision | By | Approved | Date |
|---|---|---|---|
| ORIGINAL | | Kercheval | 12/75 |
| Add Metric | | T. Stanton | 03/03 |
| Reformatted | | T. Stanton | 04/06 |
| Edited | | T. Stanton | 02/09 |
| Edited | S.S. | T. Regello | 03/11 |

**SAN DIEGO REGIONAL STANDARD DRAWING**

# CORRUGATED STEEL PIPE INLETS, DETAILS

RECOMMENDED BY THE SAN DIEGO REGIONAL STANDARDS COMMITTEE

7/26/2012

Chairperson R.C.E. 19246 Date

DRAWING NUMBER **D-17A**

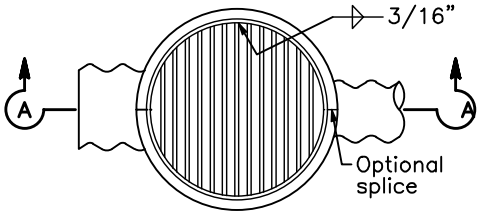


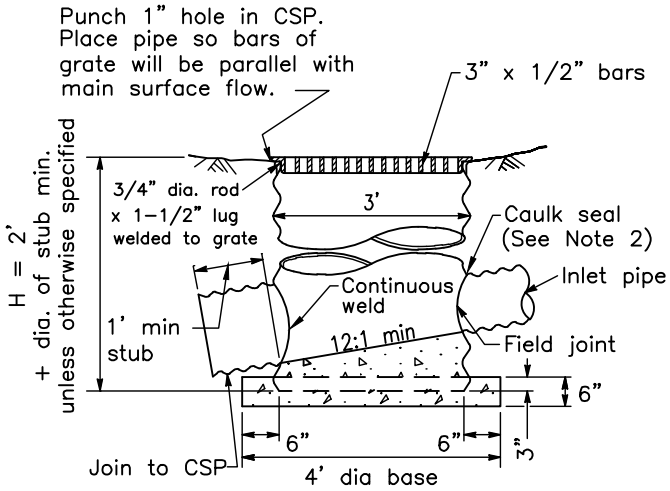


SECTION A–A
TYPE A

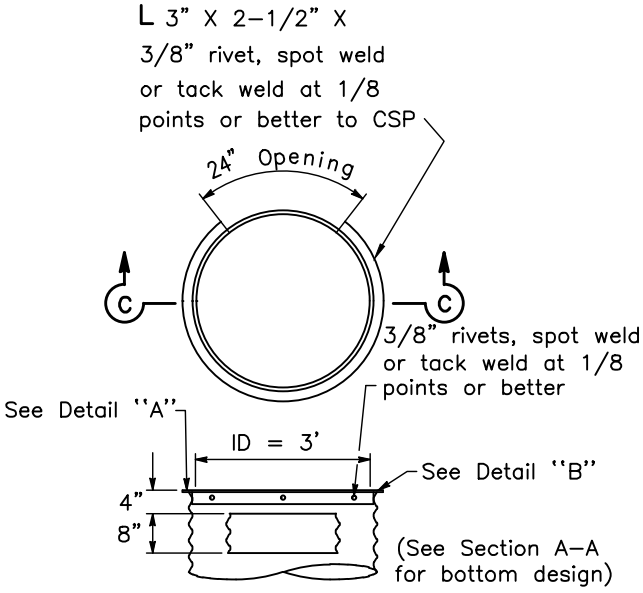


SECTION C–C
TYPE B

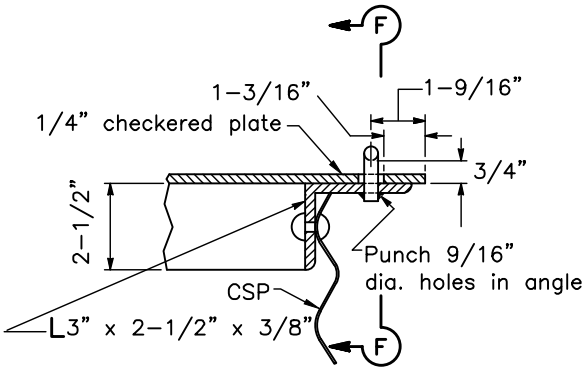


DETAIL "B"

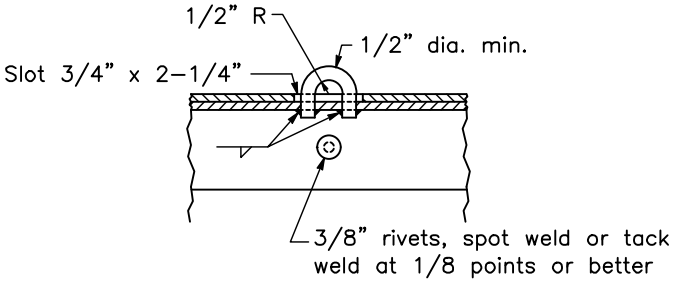


SECTION F–F

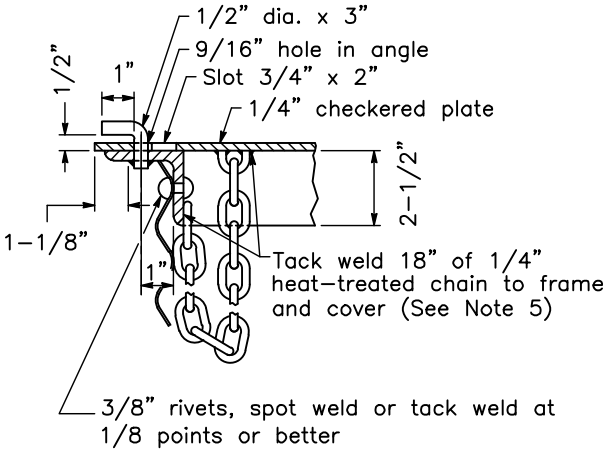


DETAIL "A"

## NOTES

1. All components shall be galvanized.
2. Inlet and outlet pipes shall be set at factory and positioned as shown on plans.
3. See D–17B for ladder and step details.
4. See D–17A for additional grate details.
5. Grate to be provided when specified.
6. Grate detail shall be as shown on D–17A unless otherwise approved by Agency.

| Revision | By | Approved | Date |
|---|---|---|---|
| ORIGINAL | | Kercheval | 12/75 |
| Add Metric | | T. Stanton | 03/03 |
| Reformatted | | T. Stanton | 04/06 |
| Edited | S.S. | T. Regello | 03/11 |
| | | | |

**SAN DIEGO REGIONAL STANDARD DRAWING**

# CORRUGATED STEEL PIPE INLETS TYPES A AND B

RECOMMENDED BY THE SAN DIEGO REGIONAL STANDARDS COMMITTEE

7/26/2012

Chairperson R.C.E. 19246 Date

DRAWING NUMBER **D-16**

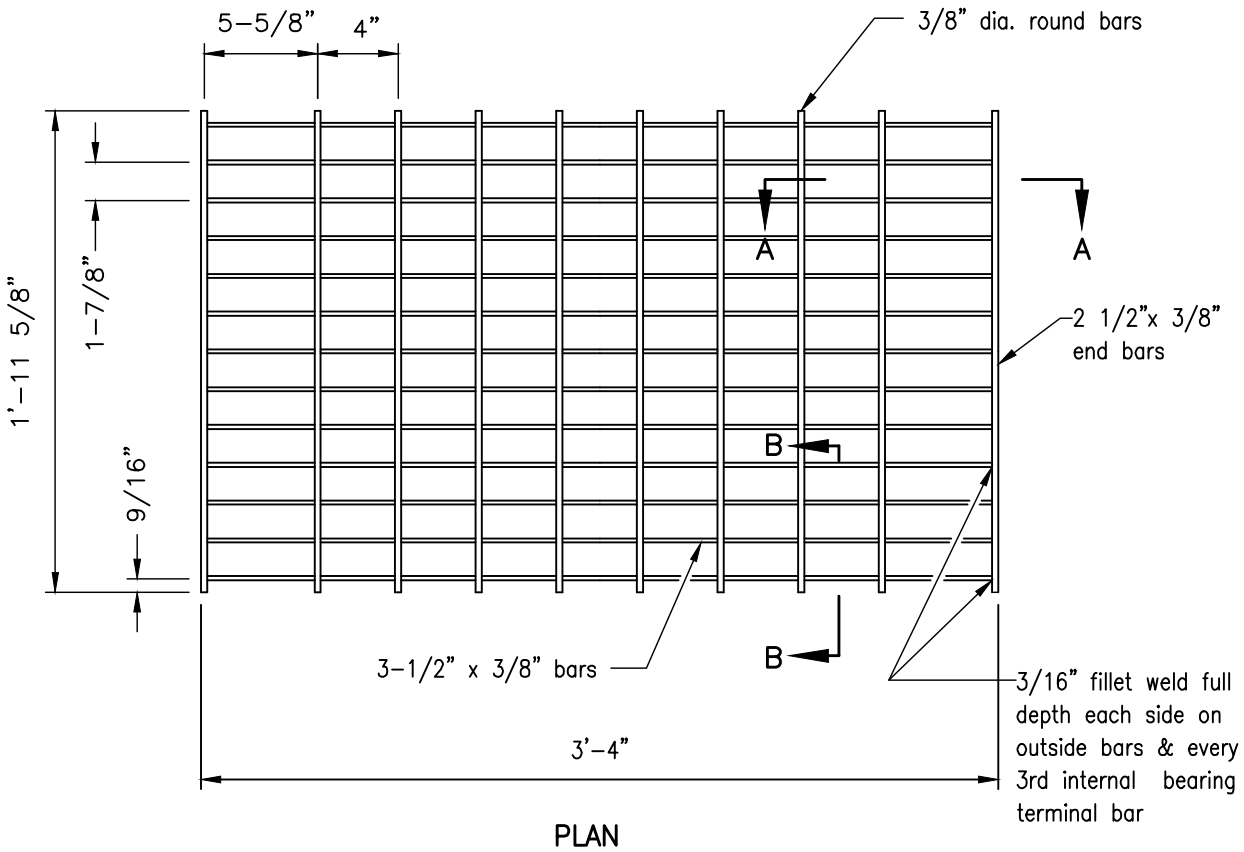


PLAN

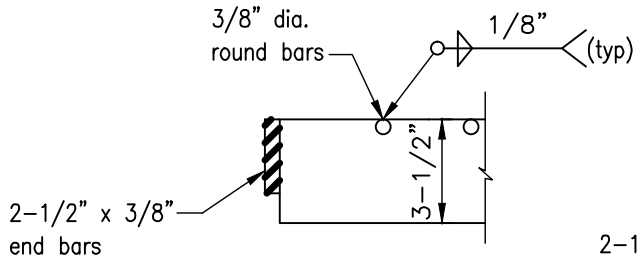


SECTION A–A

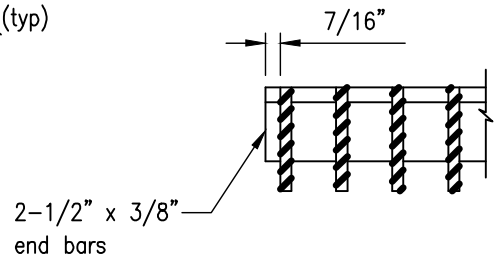


SECTION B–B

NOTES
1. Hot dip galvanize all parts after fabrication.
2. Dimensions are to centerline of bars unless otherwise noted.
3. Not to be used in pedestrian areas.
4. Weight: 200lbs +/–

| Revision | By | Approved | Date |
|---|---|---|---|
| ORIGINAL | | Kercheval | 12/75 |
| Add Metric | | T. Stanton | 03/03 |
| Reformatted | | T. Stanton | 04/06 |
| Edited | | T. Stanton | 02/09 |
| Edited | S.S. | T. Regello | 03/11 |

SAN DIEGO REGIONAL STANDARD DRAWING

# DRAINAGE STRUCTURE GRATE

RECOMMENDED BY THE SAN DIEGO REGIONAL STANDARDS COMMITTEE

7/26/2012

Chairperson R.C.E. 19246 Date

DRAWING NUMBER **D-15**

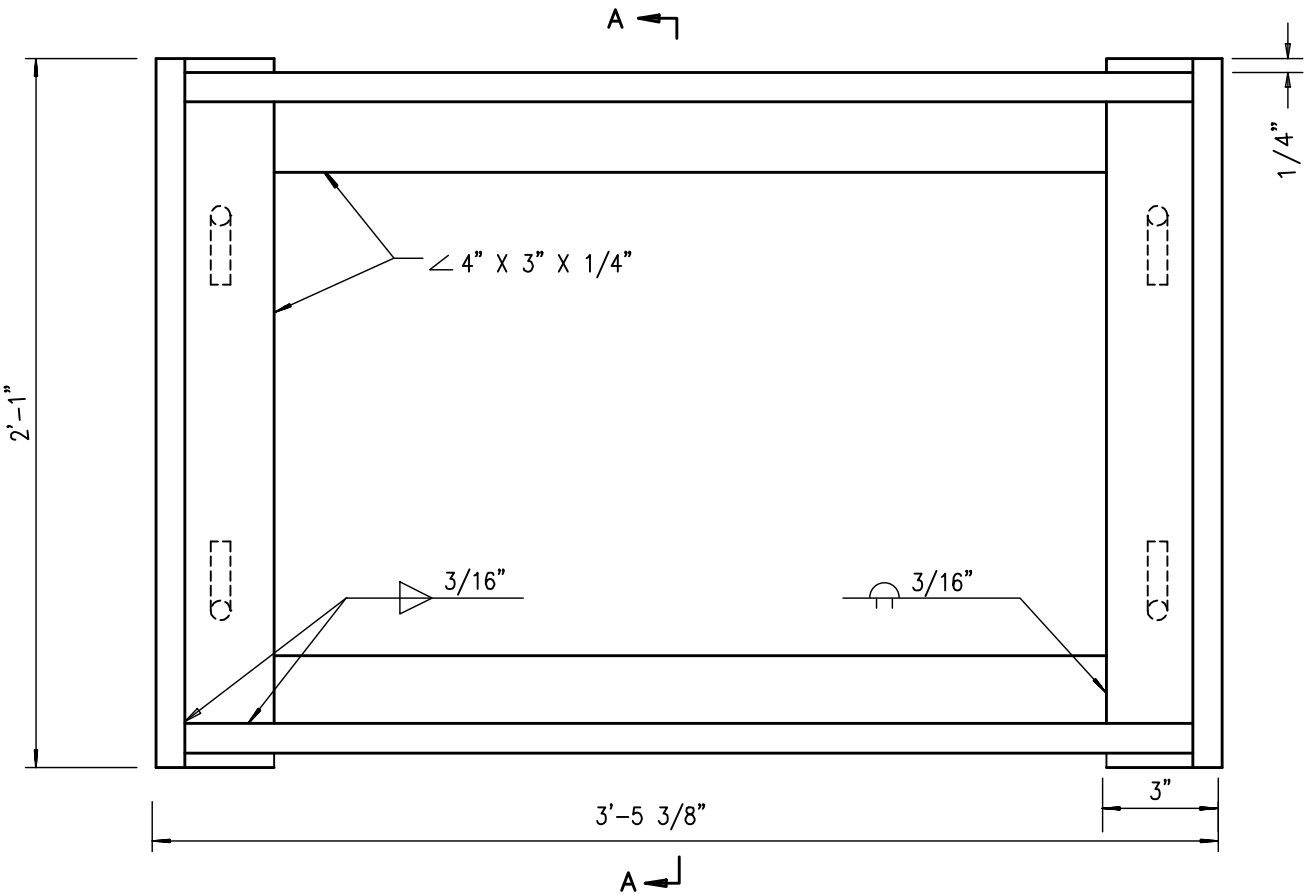


PLAN

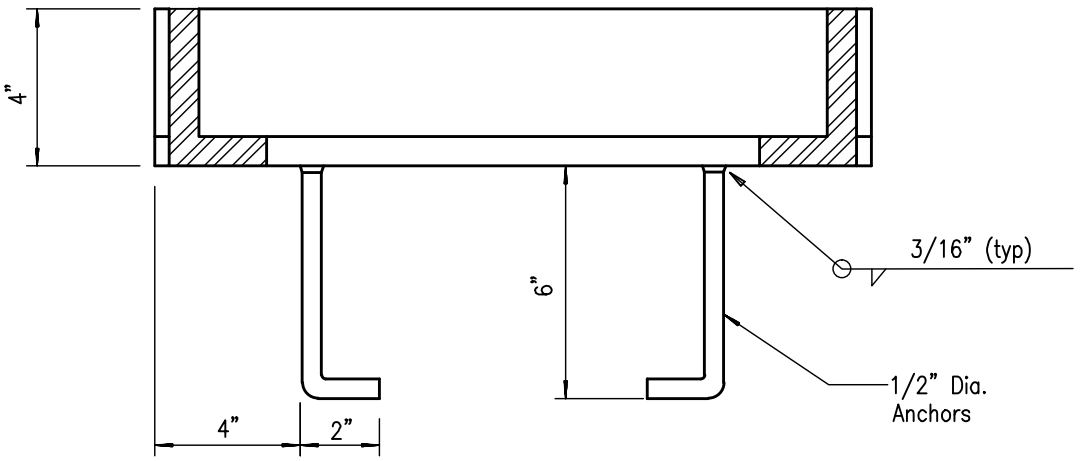


SECTION A–A

NOTE
Hot dip galvanize all parts after fabrication.

| Revision | By | Approved | Date |
|---|---|---|---|
| ORIGINAL | | Kercheval | 12/75 |
| Add Metric | | T. Stanton | 03/03 |
| Reformatted | | T. Stanton | 04/06 |
| Edited | | T. Stanton | 02/09 |
| Edited | S.S. | T. Regello | 03/11 |

**SAN DIEGO REGIONAL STANDARD DRAWING**

# WELDED STEEL GRATE FRAME

RECOMMENDED BY THE SAN DIEGO REGIONAL STANDARDS COMMITTEE

7/26/2012

Chairperson R.C.E. 19246 Date

DRAWING NUMBER **D-13**