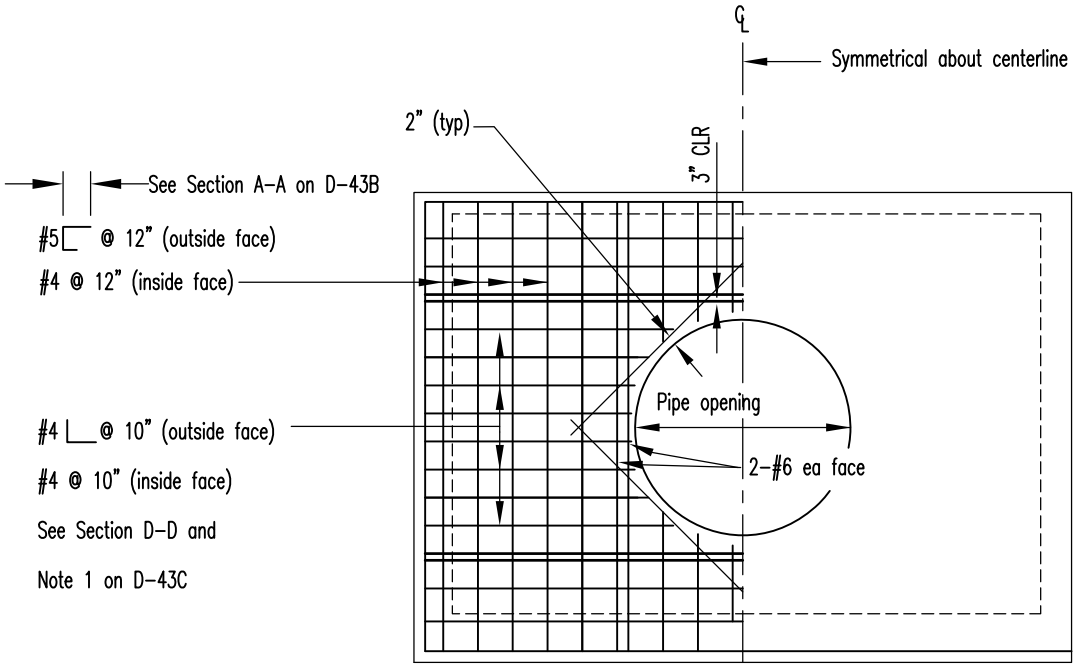

HEADWALL ELEVATION

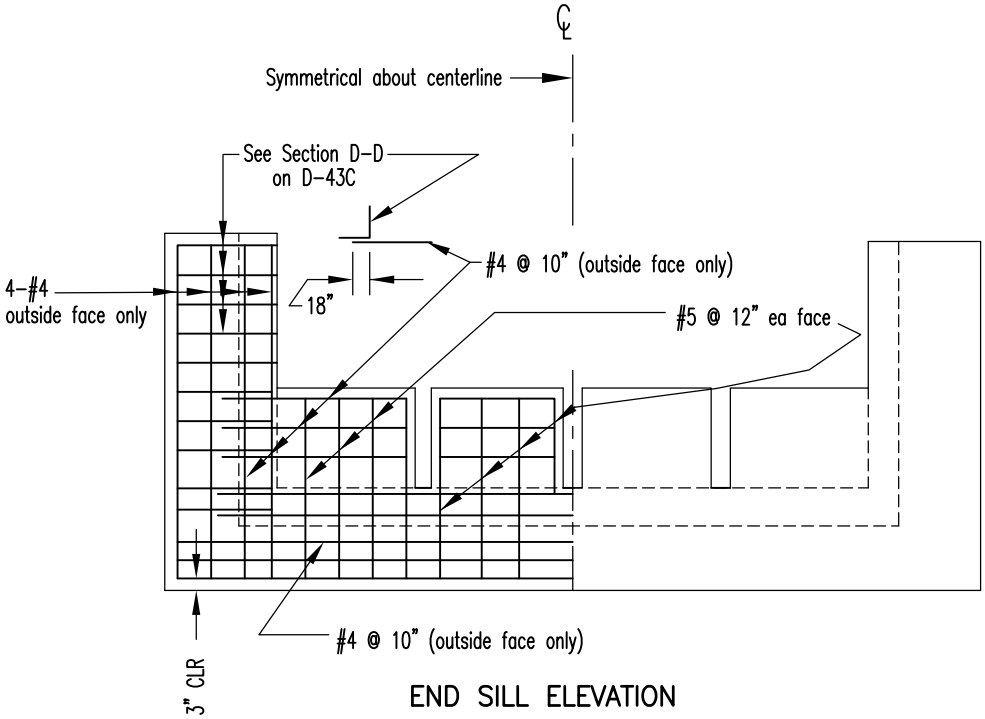

END SILL ELEVATION

Revision	By	Approved	Date
ORIGINAL		Kercheval	12/75
Add Metric		T. Stanton	03/03
Reformatted		T. Stanton	04/06
Edited		T. Stanton	02/09
Edited	S.S.	T. Regello	03/11

SAN DIEGO REGIONAL STANDARD DRAWING

CONCRETE ENERGY DISSIPATER (REINFORCEMENT) 36" TO 72" DIAMETER PIPE

RECOMMENDED BY THE SAN DIEGO REGIONAL STANDARDS COMMITTEE

7/26/2012

Chairperson R.C.E. 19246 Date

DRAWING NUMBER **D-43A**