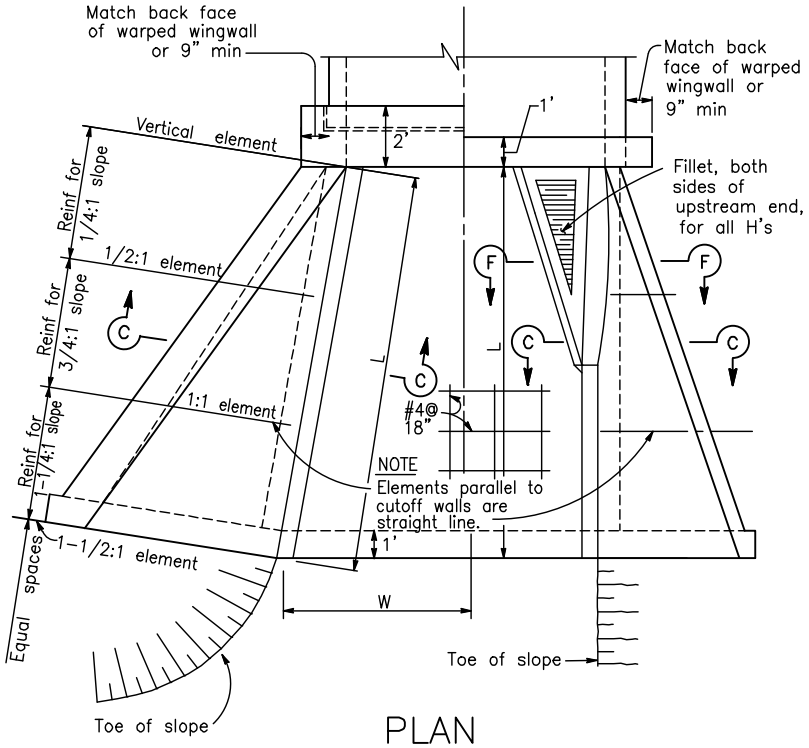

PLAN

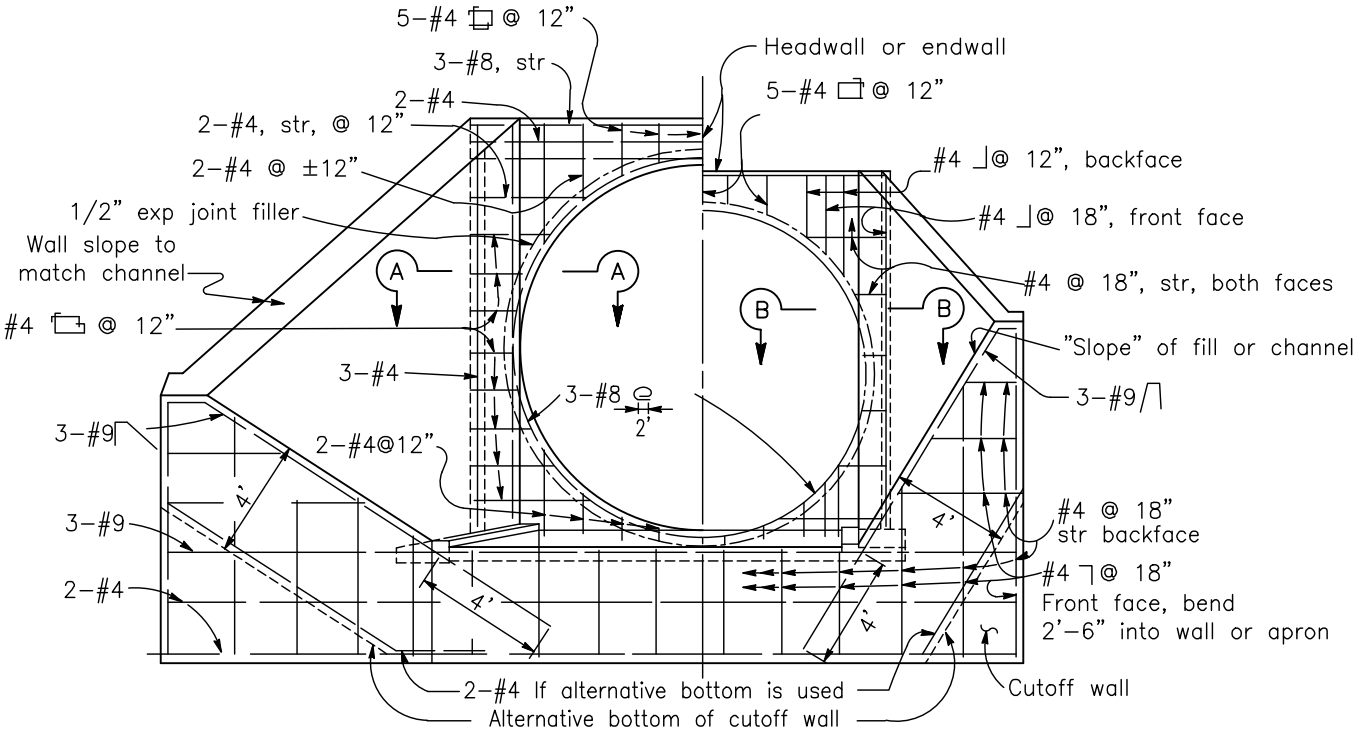

TYPICAL FOR MAXIMUM H > 10'

TYPICAL FOR MAXIMUM H ≤ 10'

END ELEVATION

If at upstream end, fillet is not shown

NOTE

See notes on D-44D.

Revision	By	Approved	Date
ORIGINAL		Kercheval	12/75
Add Metric		T. Stanton	03/03
Reformatted		T. Stanton	04/06
Edited	S.S.	T. Regello	03/11

SAN DIEGO REGIONAL STANDARD DRAWING

PIPE CULVERT - HEADWALLS, ENDWALLS & WARPED WINGWALLS

RECOMMENDED BY THE SAN DIEGO REGIONAL STANDARDS COMMITTEE

T. Stanton 7/26/2012

Chairperson R.C.E. 19246 Date

DRAWING NUMBER **D-44A**