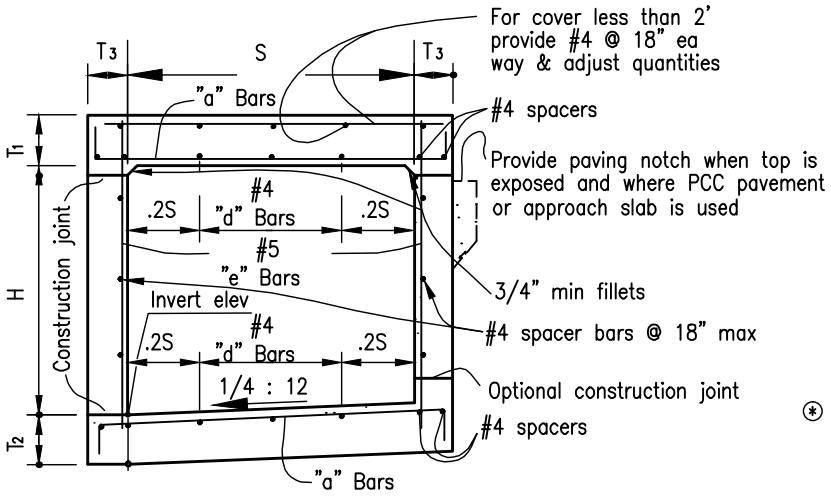

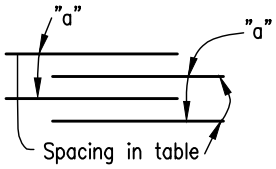

DETAIL "A"

⊛ For reinforcement clearance, except at bottom, see "Miscellaneous Details," on D-81A and D-81B

TYPICAL SECTIONS 2' THRU 6' SPANS

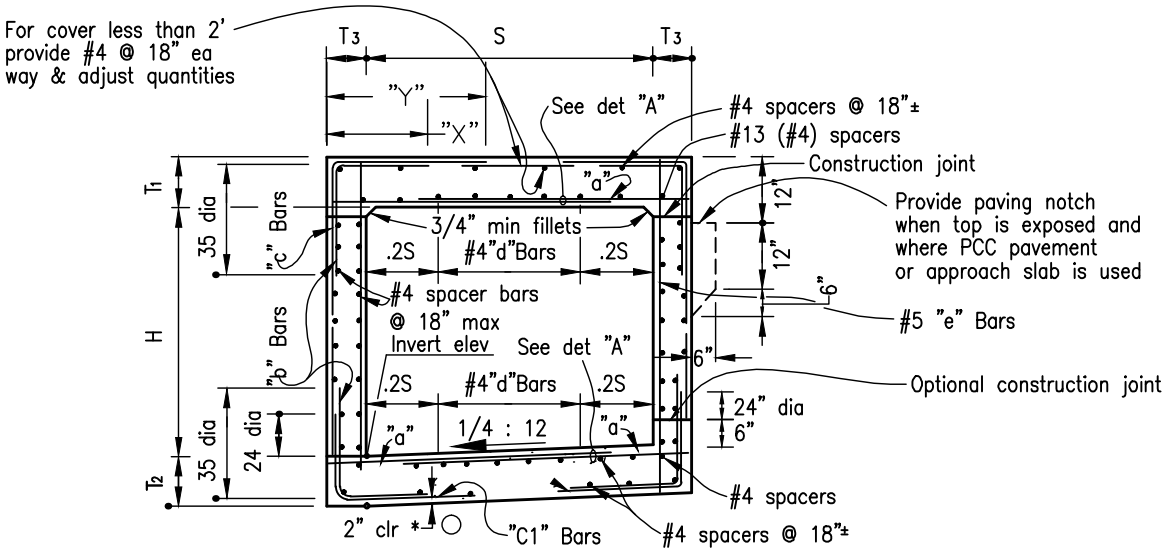

TYPICAL SECTIONS 7' THRU 12' SPANS

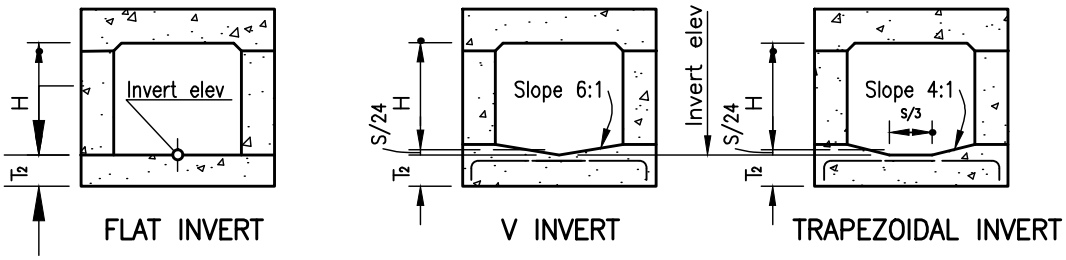

FLAT INVERT

V INVERT

TRAPEZOIDAL INVERT

ALTERNATIVE INVERTS

(When specified)

Revision	By	Approved	Date
ORIGINAL		Kercheval	12/75
Add Metric		T Stanton	03/03
Reviewed		T Stanton	04/06
Edited	S.S.	T. Regello	03/11

SAN DIEGO REGIONAL STANDARD DRAWING

SINGLE BOX CULVERT DETAILS NO.2

RECOMMENDED BY THE SAN DIEGO REGIONAL STANDARDS COMMITTEE

T Stanton 7/26/2012

Chairperson R.C.E. 19246 Date

DRAWING NUMBER **D-76G**