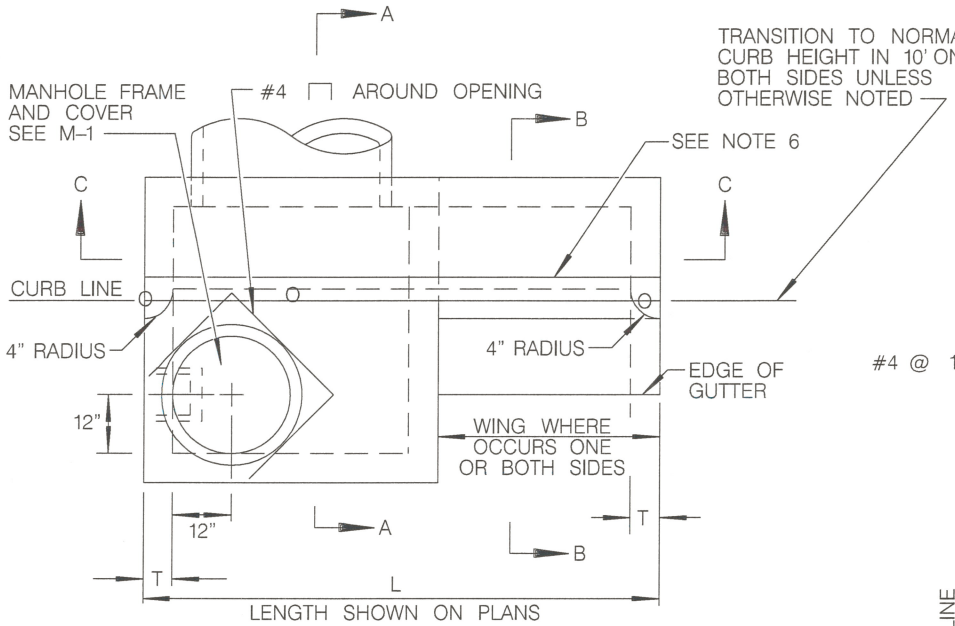

PLAN

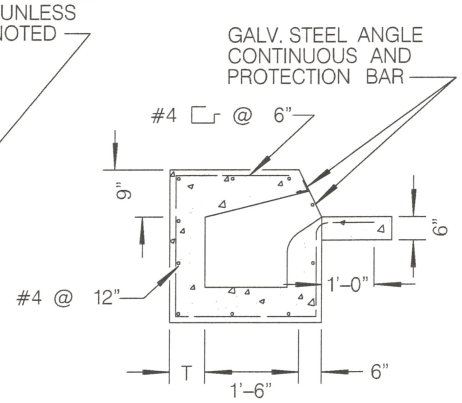

SECTION B–B

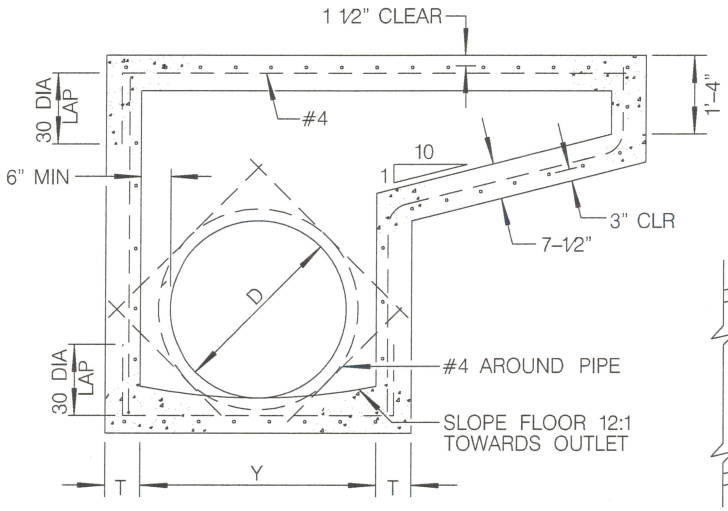

Y IS DETERMINED BY PIPE SIZE: 4' MIN, 8' MAX

SECTION C–C

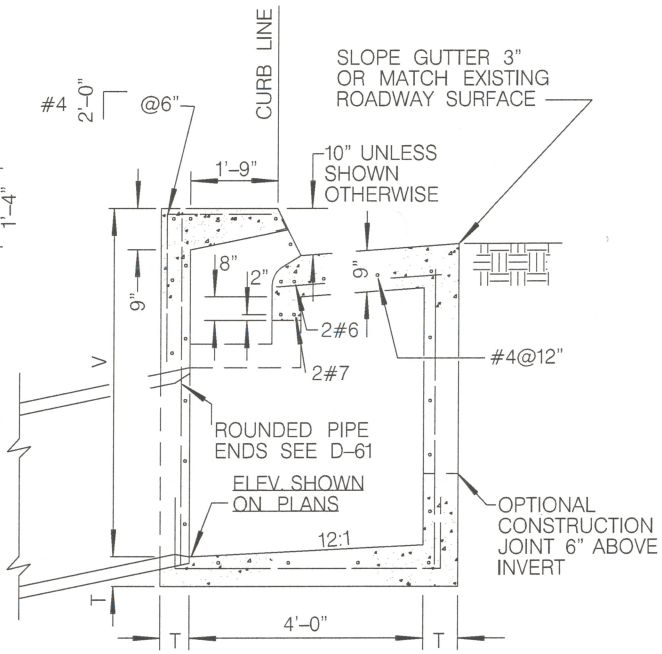

SECTION A–A

NOTES

1. TYPES ARE DESIGNATED AS FOLLOWS: (NO WING)A, (ONE WING)A–1, (TWO WINGS)A–2.
2. EXPOSED EDGES OF CONCRETE SHALL BE ROUNDED WITH A RADIUS OF 1/2".
3. WHEN V EXCEEDS 4', STEPS SHALL BE INSTALLED.
4. CONCRETE GUTTER TO MATCH ADJACENT GUTTERS
5. AN EXPANSION JOINT SHALL BE PLACED AT THE ENDS OF THE INLET WHERE THE CURB IS TO ADJOIN PER G–10.
6. PROVIDE 1/4" TOOLED GROOVE IN TOP SLAB IN LINE WITH BACK OF ADJACENT CURB.
7. SURFACE OF TOP SLAB BE SIDEWALK FINISHED TO DRAIN TOWARD STREET AT A SLOPE OF 1/4" PER FOOT.
8. ELEVATION SHALL BE SHOWN ON THE PLANS WHERE INDICATED "O" SYMBOL.
9. INSTALL INLET MARKER.

LEGEND ON PLANS

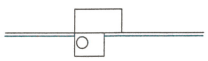

REVISION	BY	APPROVED	DATE
ORIGINAL*	KA	J. NAGELVOORT	01/12
UPDATED	RB	J. NAGELVOORT	10/15

CITY OF SAN DIEGO – STANDARD DRAWING

CURB INLET - TYPE A

RECOMMENDED BY THE CITY OF SAN DIEGO STANDARDS COMMITTEE

CAOtungca 10/5/15

COORDINATOR R.C.E. 56523 DATE

DRAWING NUMBER **SDD-115**