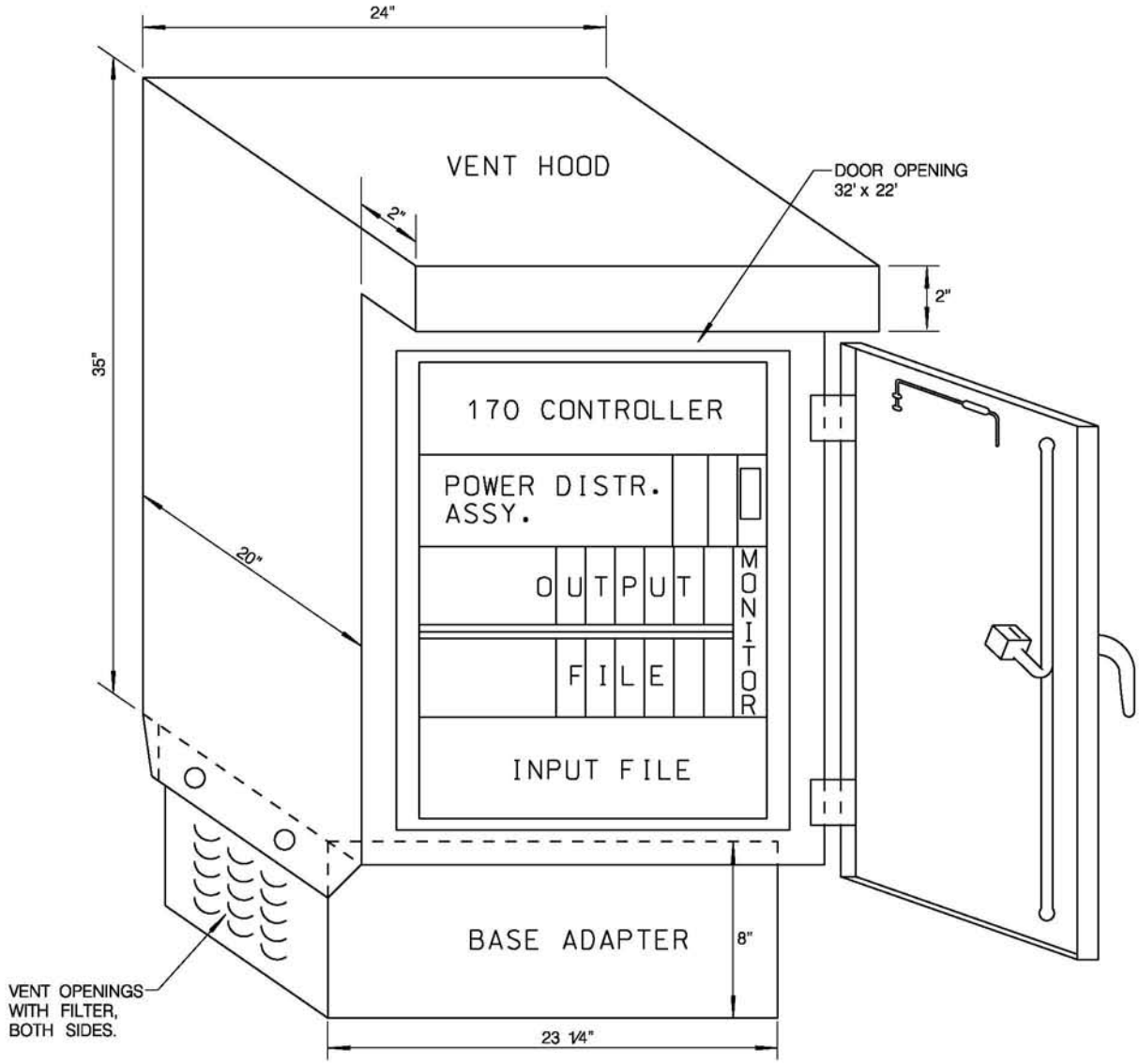

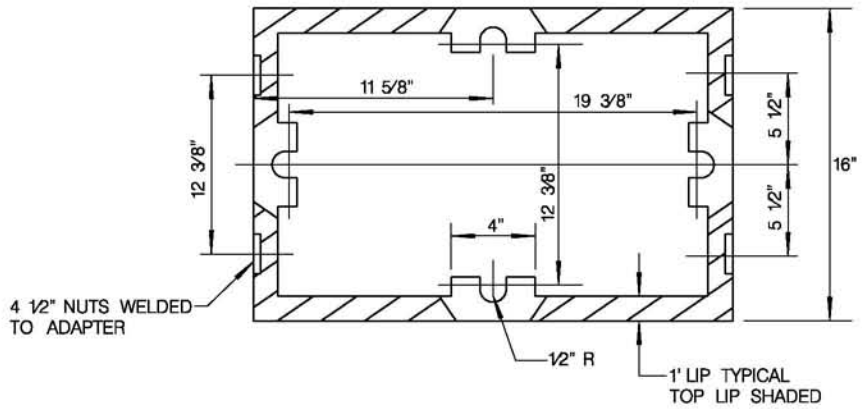

BASE ADAPTOR PLAN VIEW

REVISION	BY	APPROVED	DATE
ORIGINAL	KA	J. NAGELVOORT	01/12

CITY OF SAN DIEGO – STANDARD DRAWING

MODEL 336 CABINET

RECOMMENDED BY THE CITY OF SAN DIEGO STANDARDS COMMITTEE

COORDINATOR R.C.E. 65271 DATE 1/31/2012

DRAWING NUMBER **SDE-102**