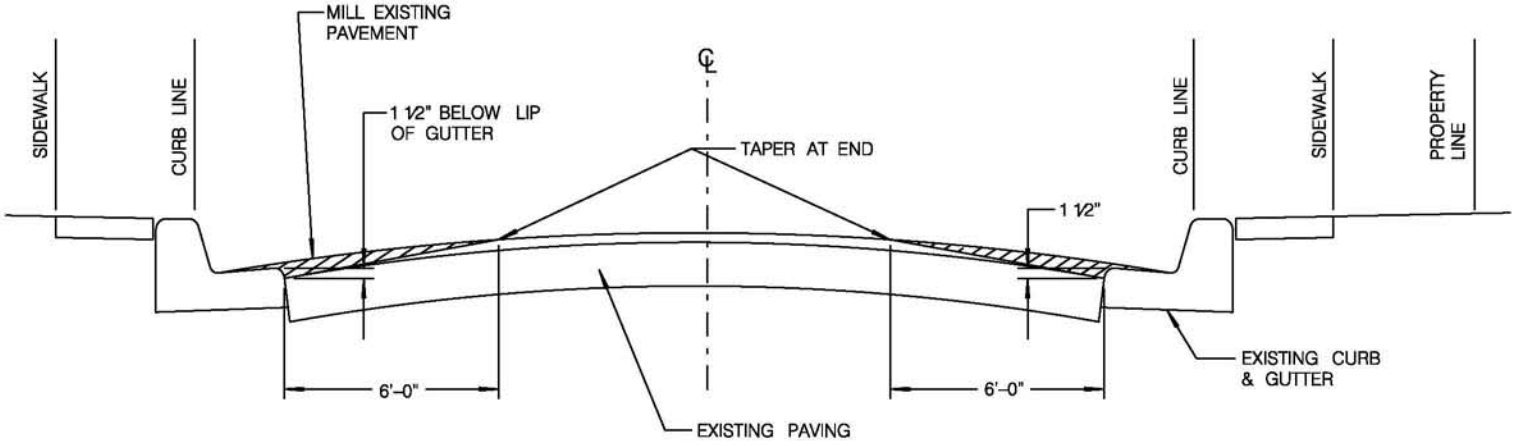

GRINDING & PREPARATION

TYPICAL SECTION

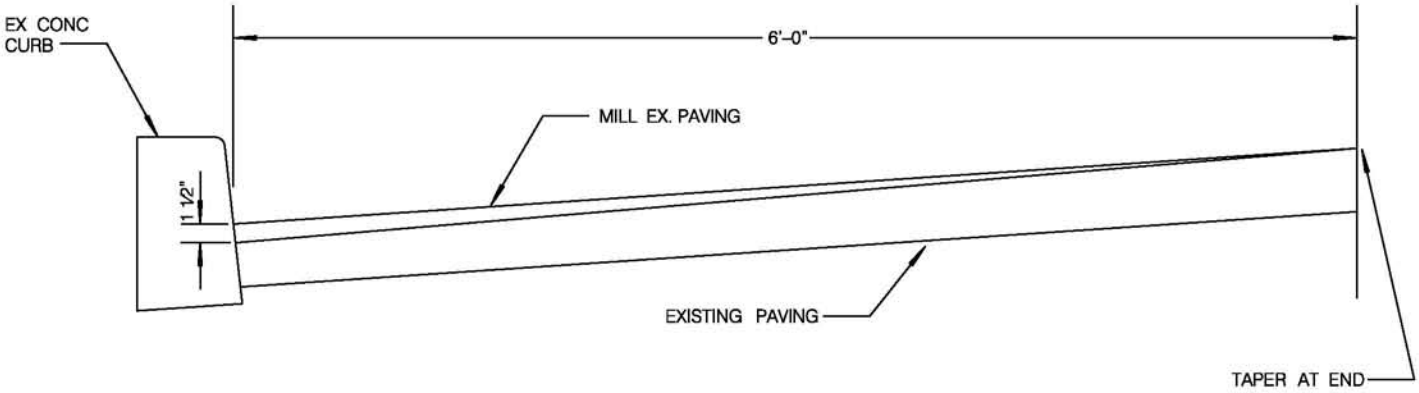

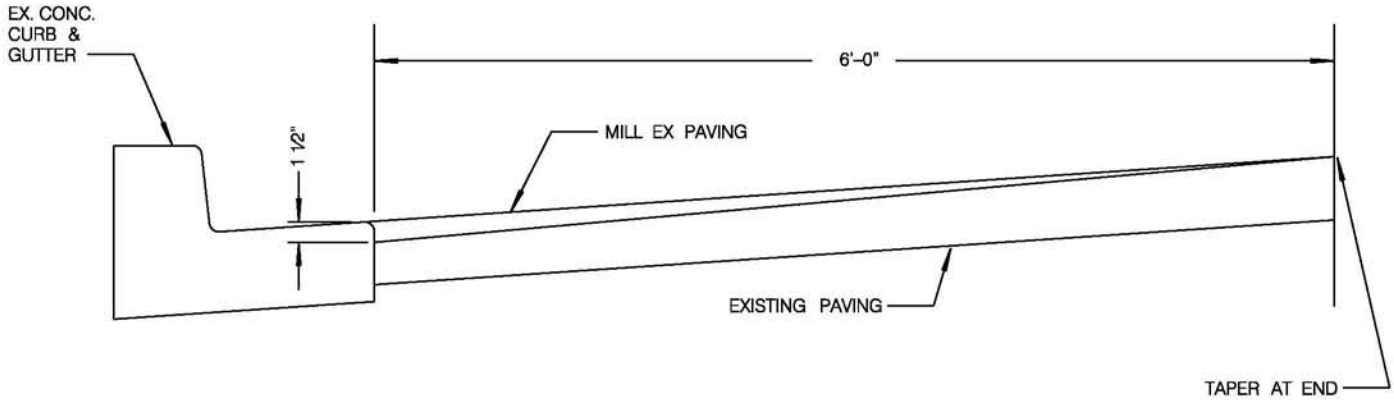

TYPICAL PAVEMENT COLD MILLING

REVISION	BY	APPROVED	DATE
ORIGINAL	KA	J. NAGELVOORT	01/12

CITY OF SAN DIEGO – STANDARD DRAWING

COLD MILLING ASPHALT CONCRETE PAVEMENT DETAIL

RECOMMENDED BY THE CITY OF SAN DIEGO STANDARDS COMMITTEE

COORDINATOR R.C.E. 65271 DATE 1/31/2012

DRAWING NUMBER **SDG-106**