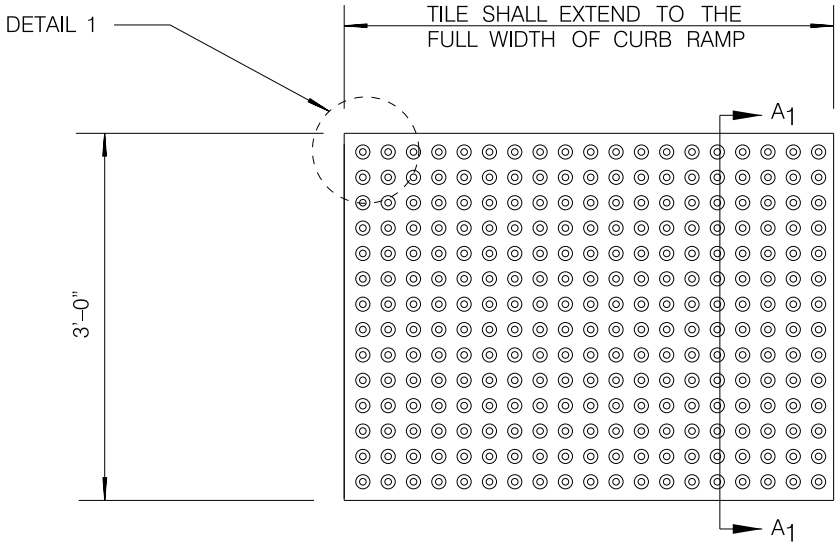

PLAN – TILE

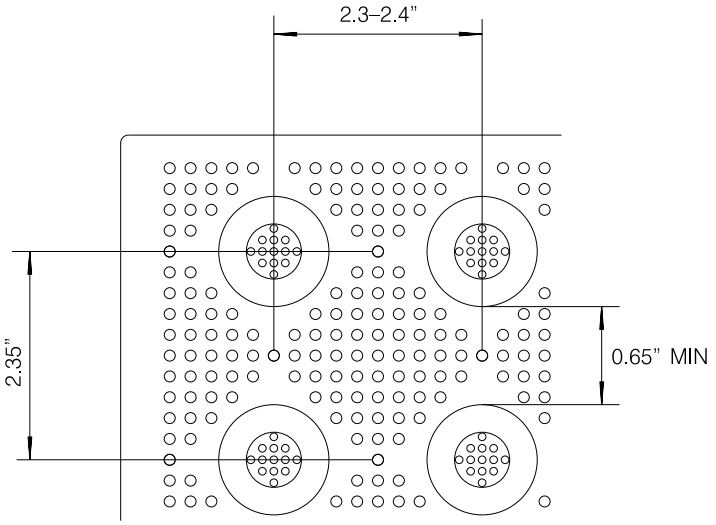

DETAIL 1

NOTES:

1. THE DETECTABLE / TACTILE WARNING TILE SHALL BE SLIP RESISTANT AND CONSIST OF AN INLINE PATTERN OF RAISED TRUNCATED DOMES.
2. COLOR: THE DETECTABLE / TACTILE WARNING TILE SHALL BE YELLOW CONFORMING TO FEDERAL STANDARDS 595C TABLE IV, COLOR NO. 33538.
3. COMPOSITE OR POLYMER CONCRETE DETECTABLE WARNING TILES CAN BE USED AS AN ALTERNATIVE TO THE STAINLESS STEEL MATERIAL FOR LIGHT USE AREAS (I.E., RESIDENTIAL ZONE) ONLY.
4. DETECTABLE WARNING TILE PRODUCTS SHALL BE PER THE CITY'S APPROVED MATERIALS LIST

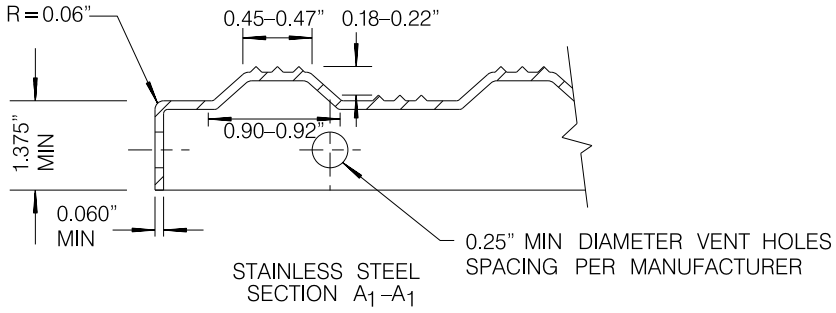

STAINLESS STEEL
SECTION A_1–A_1

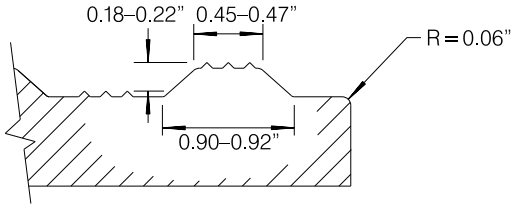

COMPOSITE
SECTION A_1–A_1

REVISION	BY	APPROVED	DATE
ORIGINAL	FC	A. OSKOUI	12/03
UPDATE	FC	A. OSKOUI	12/06
UPDATE	FC	A. OSKOUI	02/07
UPDATE	FC	A. OSKOUI	12/08
UPDATE	AW	J. NAGELVOORT	10/15

CITY OF SAN DIEGO – STANDARD DRAWING

DETECTABLE WARNING TILES

CITY OF SAN DIEGO
STANDARDS COMMITTEE

COORDINATOR R.C.E. 56523 DATE

DRAWING NUMBER **SDG-130**