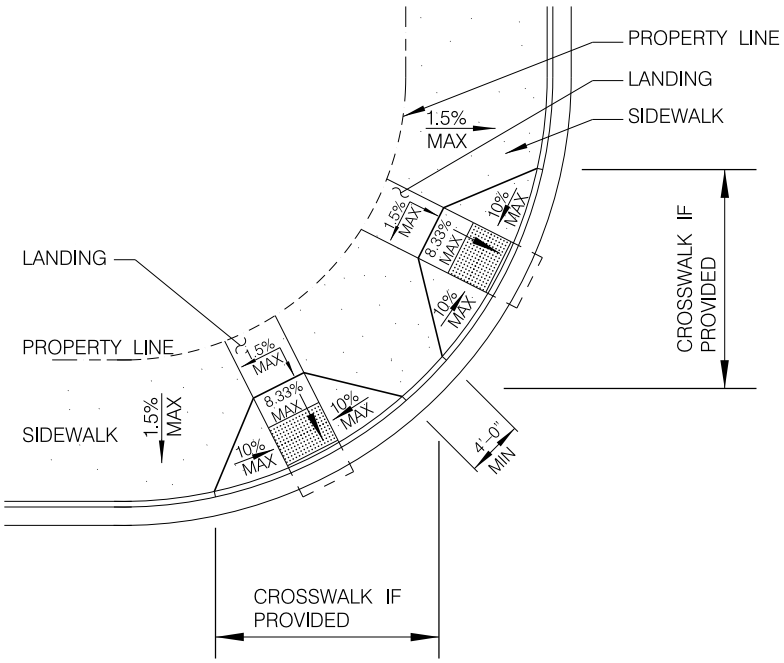

STANDARD DUAL CURB RAMPS

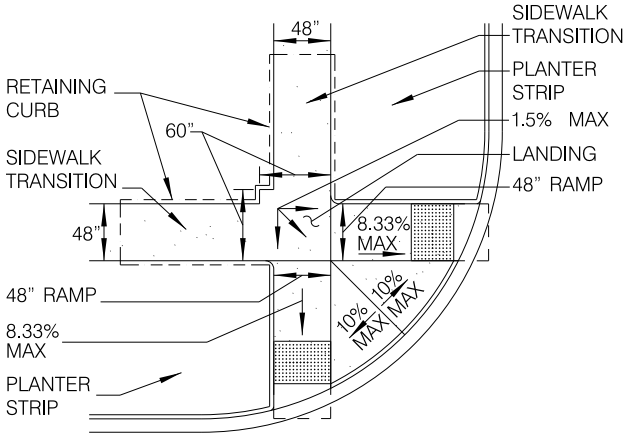

CURB RAMPS ADJACENT TO NON WALKABLE SURFACE >10' ROW

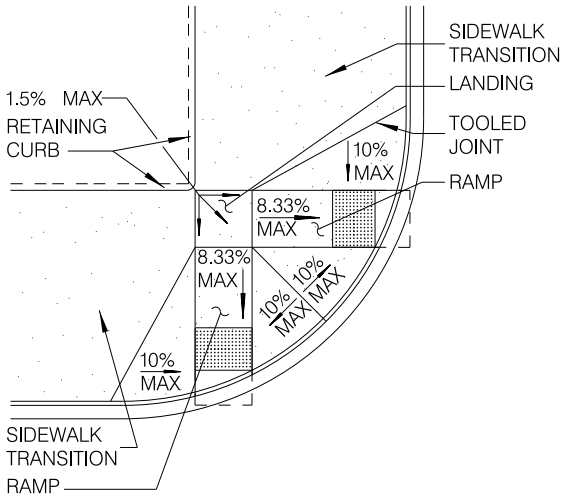

DUAL CURB RAMPS

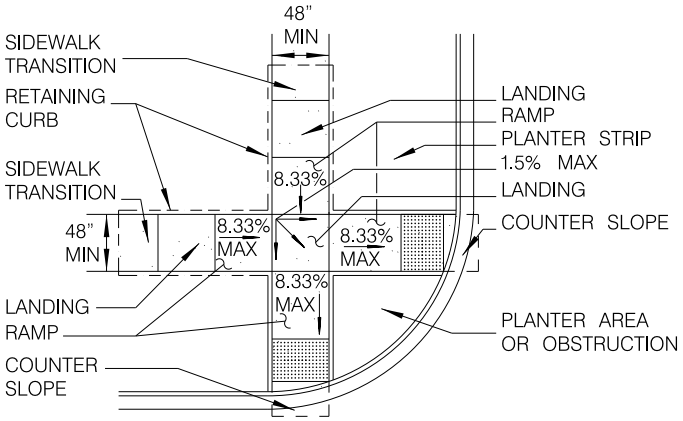

CURB RAMPS ADJACENT TO NON WALKABLE SURFACE <10' ROW

DRAFT

REVISION	BY	APPROVED	DATE
ORIGINAL	FC	A. OSKOUI	12/06
UPDATED	KA	J. NAGELVOORT	01/12
UPDATED	SG	–	16/14
UPDATED	RH		02/15

CITY OF SAN DIEGO – STANDARD DRAWING

DUAL CURB RAMPS

RECOMMENDED BY THE CITY OF SAN DIEGO STANDARDS COMMITTEE

COORDINATOR R.C.E. 56523 DATE

DRAWING NUMBER **SDG-134**