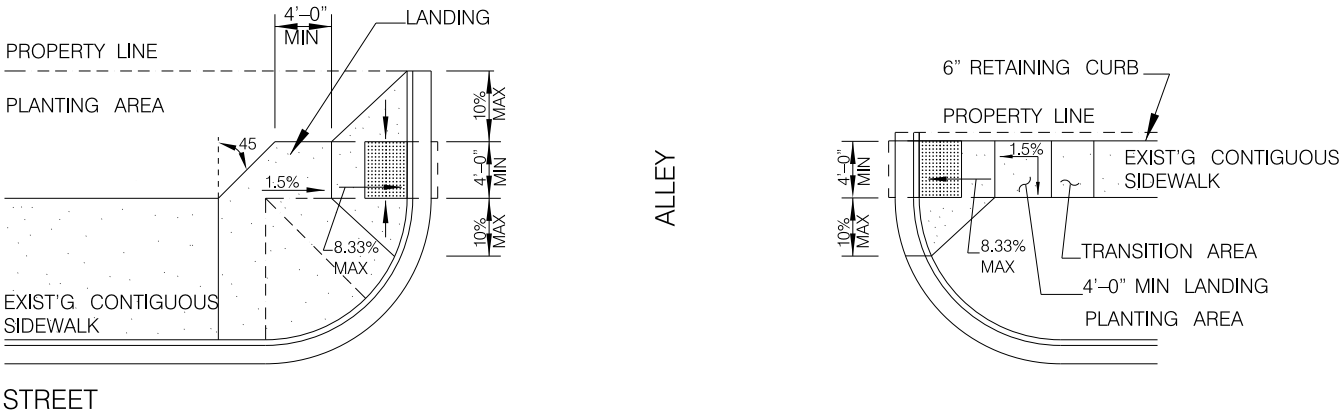

TYPICAL PLAN

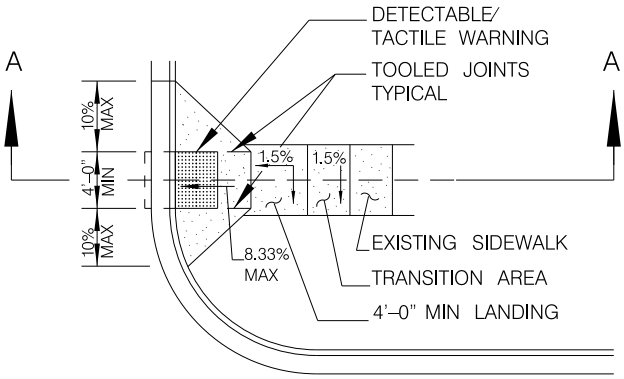

PLAN VIEW

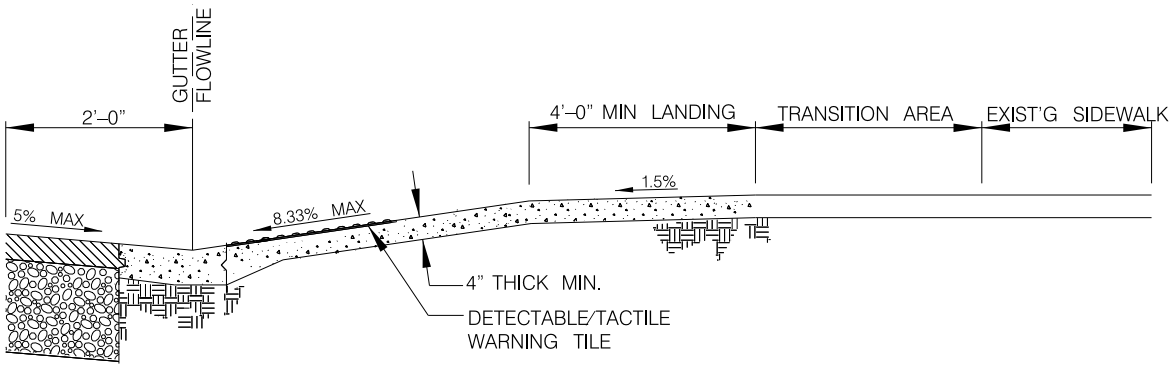

SECTION A–A

DRAFT

NOTES:

1. SEE SDG–130 FOR ADDITIONAL CURB RAMP DETAILS AND INFORMATION.

REVISION	BY	APPROVED	DATE
ORIGINAL	AW	J. NAGELVOORT	10/15

CITY OF SAN DIEGO – STANDARD DRAWING

CURB RAMP - TYPE D

RECOMMENDED BY THE CITY OF SAN DIEGO STANDARDS COMMITTEE

COORDINATOR R.C.E. 56523 DATE

DRAWING NUMBER **SDG-137**