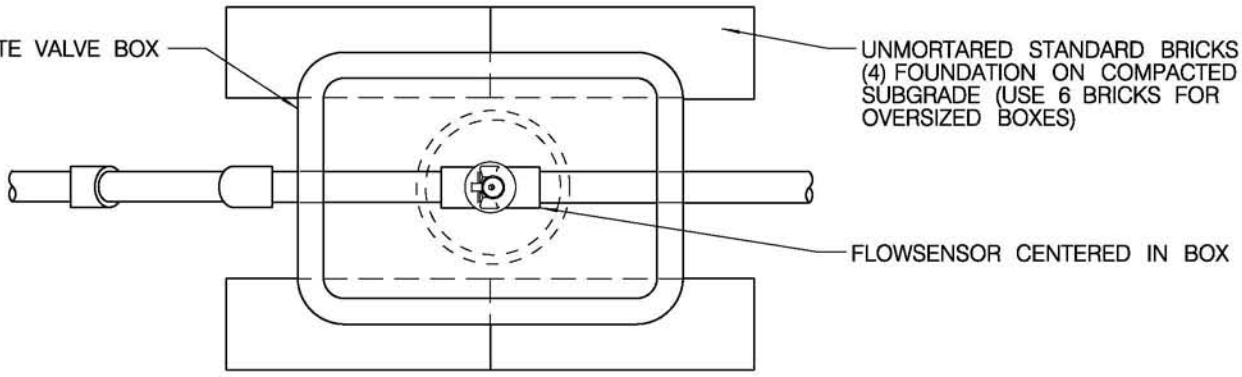

PLAN

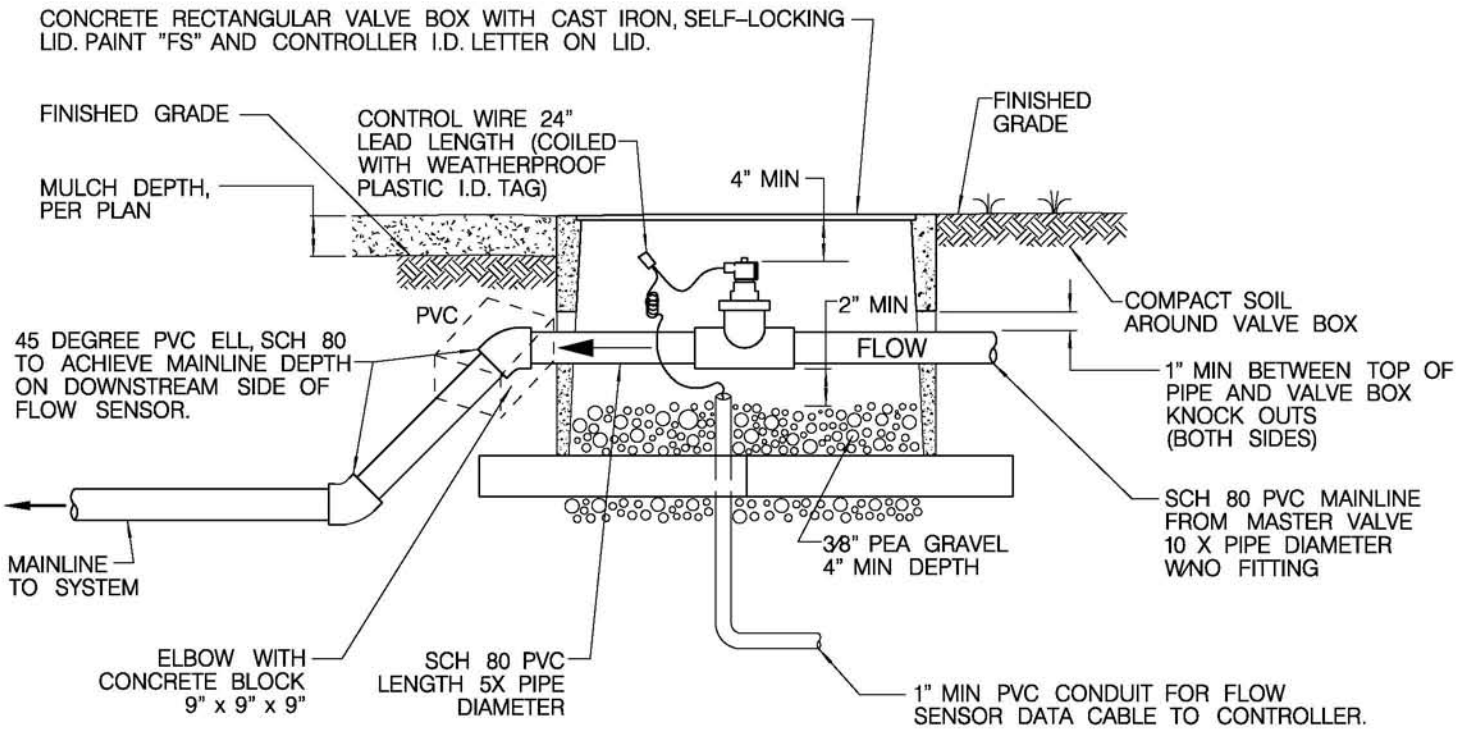

ELEVATION

NOTES:

1. SPLICES SHALL BE SOLDERED WITH A PROPERLY SET MECHANICAL SPLICE CONNECTOR, ENTIRELY ENCLOSED IN SELF-CURING RESIN AND SHALL BE COMPLETELY WATER-PROOF.
2. SEAL CONDUIT OPENINGS WITH ELECTRICAL SEALANT.
3. KNOCK OUTS SHALL NOT BE ENLARGED.
4. INSTALL ONLY ONE FLOW SENSOR PER BOX.
5. VALVE BOXES SHALL BE SET PERPENDICULAR TO HARDSCAPE PER MULCH DEPTH IN SHRUB / GROUNDCOVER AREAS. IF NECESSARY TO BE SET IN TURF, VALVE BOXES SHALL BE SET FLUSH WITH FINISHED GRADE.

LEGEND ON PLANS

(F) FS

REVISION	BY	APPROVED	DATE
ORIGINAL*	RH	J. NAGELVOORT	01/12

CITY OF SAN DIEGO – STANDARD DRAWING

FLOW SENSOR

RECOMMENDED BY THE CITY OF SAN DIEGO STANDARDS COMMITTEE

COORDINATOR R.C.E. 65271 DATE 1/31/2012

DRAWING NUMBER **SDI-112**