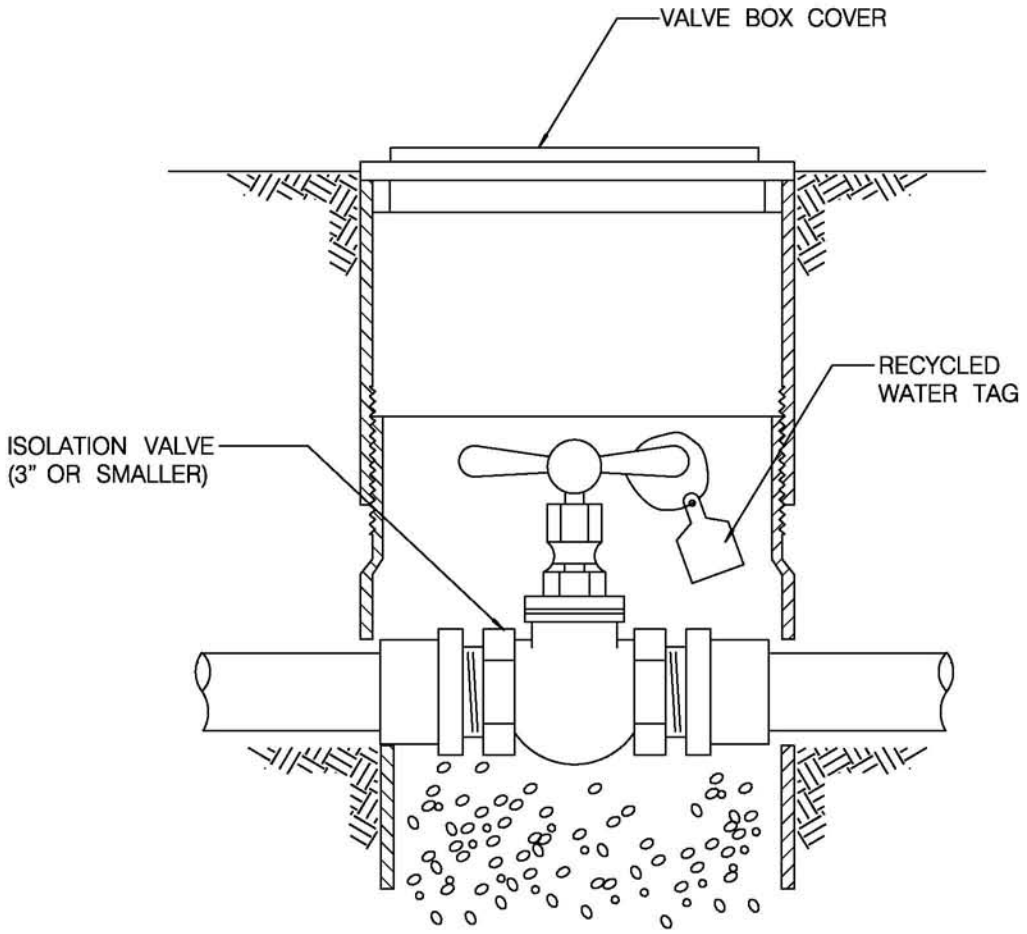


NOTE:
RECYCLE WATER IRRIGATION VALVE BOX COVER

| REVISION | BY | APPROVED | DATE |
|---|---|---|---|
| ORIGINAL | KA | J. NAGELVOORT | 01/12 |
| | | | |
| | | | |
| | | | |
| | | | |

CITY OF SAN DIEGO – STANDARD DRAWING

**SIGN / TAG FOR RECYCLED WATER IRRIGATION VALVE**

RECOMMENDED BY THE CITY OF SAN DIEGO STANDARDS COMMITTEE

COORDINATOR R.C.E. 65271 DATE 1/31/2012

DRAWING NUMBER **SDRW-110**