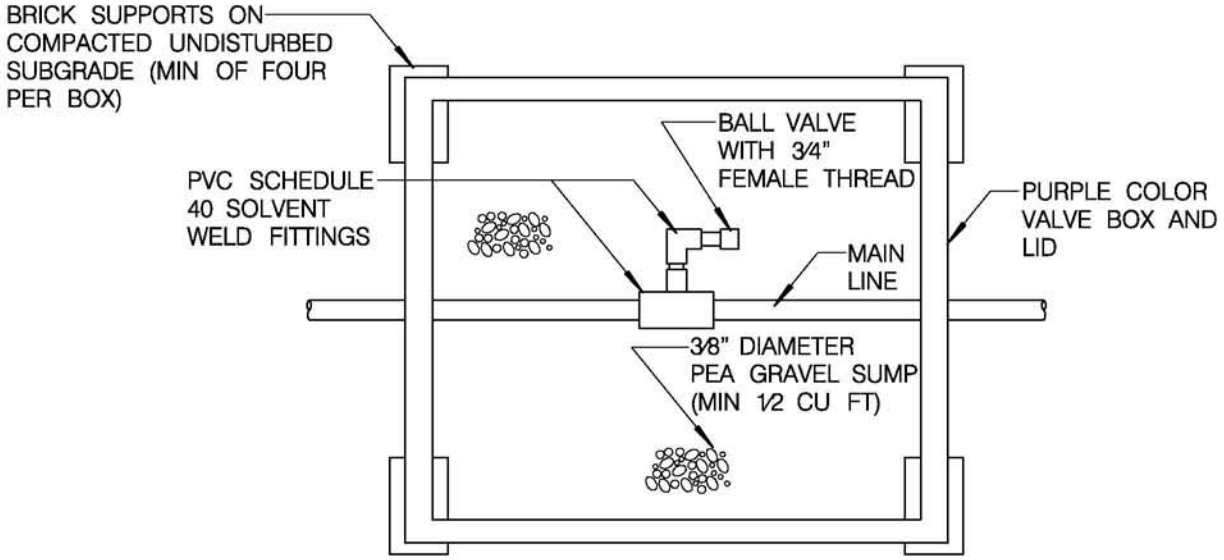

REVISION	BY	APPROVED	DATE
ORIGINAL	KA	J. NAGELVOORT	01/12

CITY OF SAN DIEGO – STANDARD DRAWING

CROSS CONNECTION CONTROL TEST STATION

RECOMMENDED BY THE CITY OF SAN DIEGO STANDARDS COMMITTEE

COORDINATOR R.C.E. 65271 DATE 1/31/2012

DRAWING NUMBER **SDRW-116**