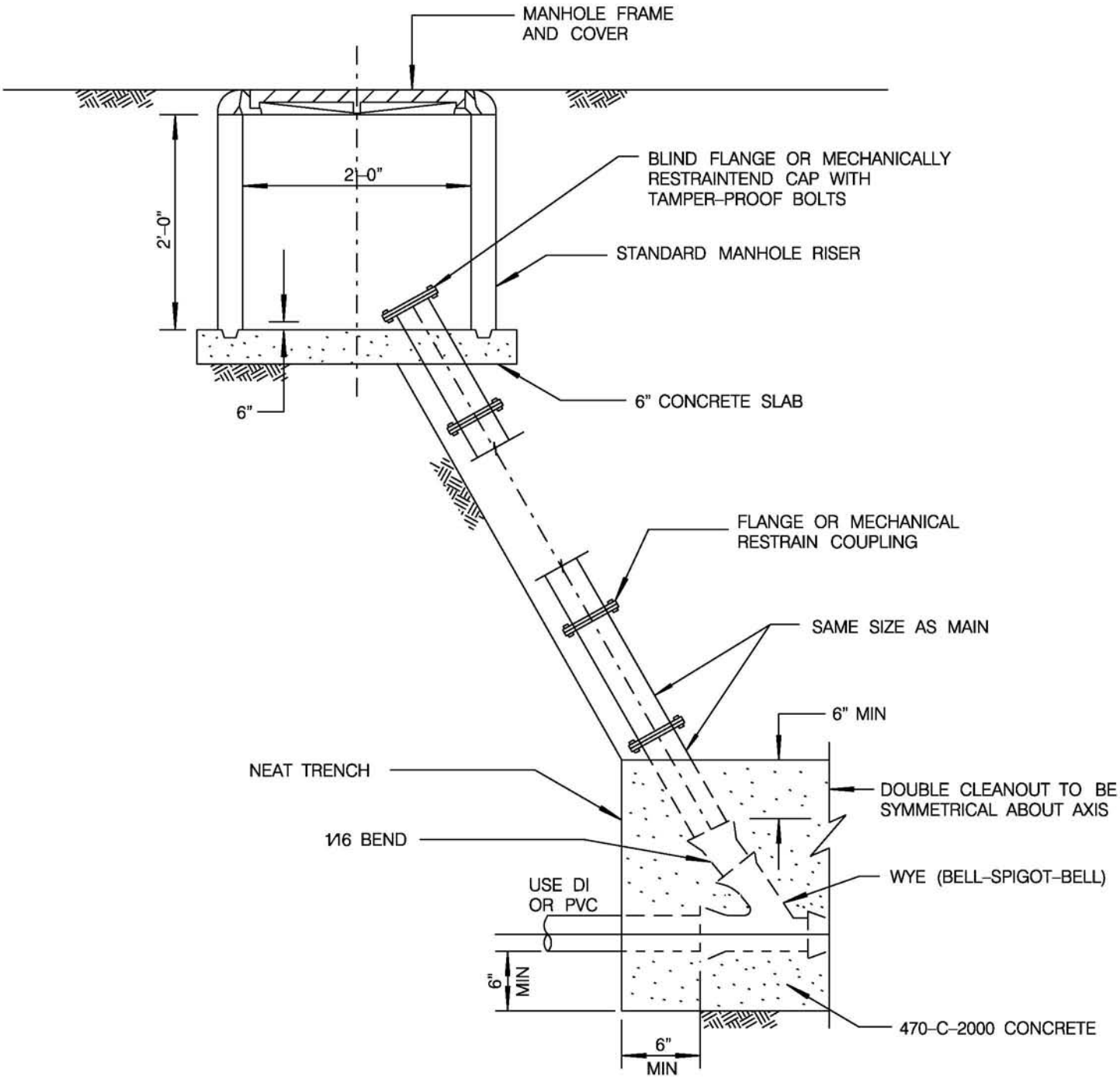

NOTES

1 SIMILAR POLYVINLY CHLORIDE COMPONENTS MAY BE USED IN ACCORDANCE WITH ASTM STANDARD SPECIFICATION D2241 AND D3139.
2. CONCRETE SLAB SHALL BE 560-C-3250.
3. USE HEAVY DUTY MANHOLE FRAME AND COVER, M-1, IN AREAS SUBJECT TO VEHICULAR TRAFFIC; USE LIGHT DUTY MANHOLE FRAME AND COVER, M-2, IN ALL OTHER LOCATIONS.
4. MINIMUM PIPE PRESSURE CLASS 200.

LEGEND ON PLANS

CO

REVISION	BY	APPROVED	DATE
DETAIL	JP	A. OSKOUI	12/03
UPDATED	KA	J. NAGELVOORT	01/12

CITY OF SAN DIEGO – STANDARD DRAWING

CLEANOUT - SEWER FORCE MAIN

RECOMMENDED BY THE CITY OF SAN DIEGO STANDARDS COMMITTEE

COORDINATOR R.C.E. 65271 DATE 1/31/2012

DRAWING NUMBER **SDS-109**