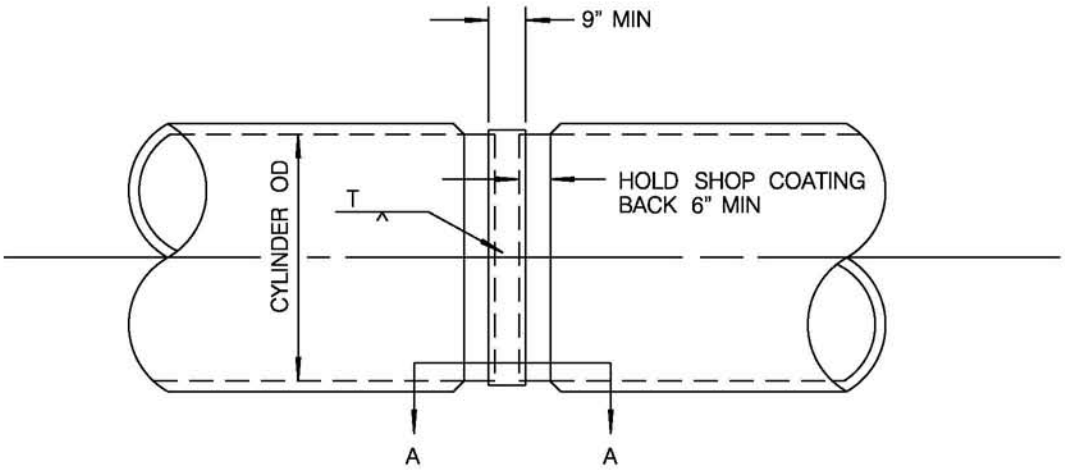

ELEVATION

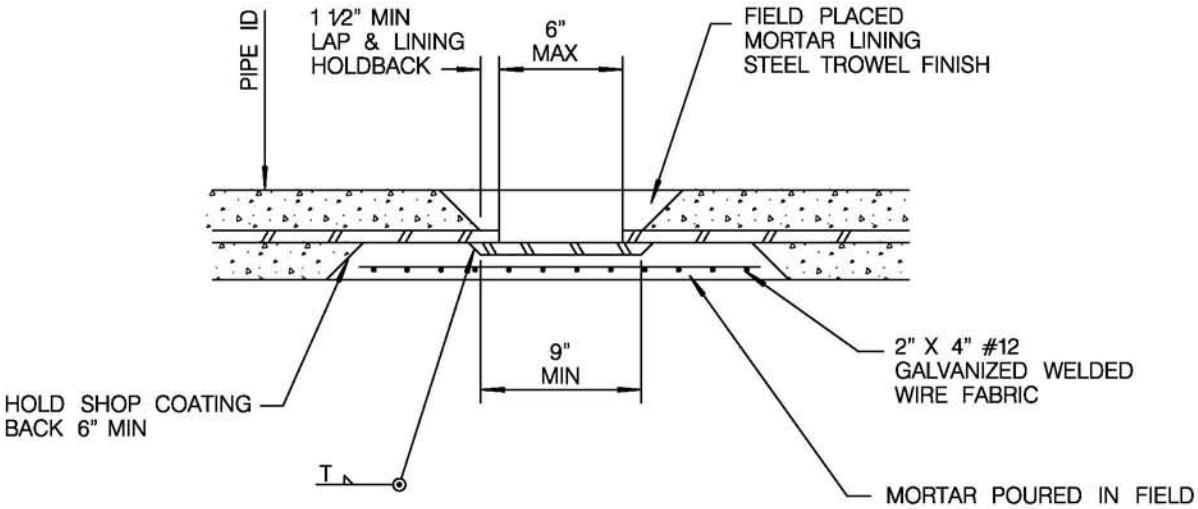

SECTION A – A

NOTES:

CONTRACTOR SHALL PROVIDE HANDHOLES AS REQUIRED TO COMPLETE THE WORK

REVISION	BY	APPROVED	DATE
ORIGINAL	JS	A. OSKOUI	12/06
UPDATED	KA	J. NAGELVOORT	01/12

CITY OF SAN DIEGO – STANDARD DRAWING

SPLIT BUTT STRAP

RECOMMENDED BY THE CITY OF SAN DIEGO STANDARDS COMMITTEE

COORDINATOR R.C.E. 65271 DATE 1/31/2012

DRAWING NUMBER **SDW-139**