DRAINAGE SYSTEMS

SUPPLEMENTAL TO REGIONAL STANDARD DRAWING ("D" SERIES)

DRAWINGS D–1, D–2, D–3, AND D–4

REQUIRES the use of SDG–110

DRAWING D–12

NOTES

Amend note 3 to read: "When curb inlet opening height (H) exceeds 8 inch, install 1 inch diameter steel protection bar."

Amend note 4 to read: "Install additionall bars at 3–1/2 inch clear spacing above first bar when opening exceeds 16 inch."

DRAWING D–19

NOTES

Add 3. Slotted drain installations shall be encased with 6 inch PCC (520–C–2500) all around and shall be poured monolithically with the curb and gutter.

DRAWING D–40

SECTION B–B

Amend 1/2D min. to read: "1D min." In addition, show riprap and concrete channel drawn even with top of pipe.

NOTES

Amend note 1.B) to read: "Filter blanket material."

Amend note 3 to read: "Riprap shall be placed over a geotextile filter fabric. Filter blanket material shall be placed under the fabric when specified."

DRAWING D–40, D–41A, and D–41B

Add the following:

Design Velocity (Ft/Sec)*	Rock Classification
6–10	No. 2 Backing
10–12	1/4 Ton
12–14	1/2 Ton
14–16	1 Ton
16–18	2 Ton

SECTION OF RIP RAP

* over 18 fps requires special design

Revision	By	Approved	Date
ORIGINAL		M. V. Rollinger	5-20-92
NOTES	SM	D. Clafre	12-9-03

CITY OF SAN DIEGO - STANDARD DRAWING

SUPPLEMENTAL TO REGIONAL STANDARD DRAWING ("D" SERIES)

CITY OF SAN DIEGO STANDARDS COMMITTEE

COORDINATOR R.C.E. 25902 — 2-7-95 DATE

DRAWING NUMBER **SDD-100**

DRAWING D–63

NOTES

Amend note 3 to read: "The O.D. of smaller pipe shall not be more than two–thirds (2 /3) the size of the larger pipe's I.D."

DRAWING D–70, D–71, D–74, D–79A, D–79B, D–80A, & 80B

NOTES

"Channel fencing is required. Unless otherwise shown on the plans a chain link fence (per Standard Drawings M–5 and M–6) six feet (6') in height, with a top rail set at six inches (6") inside easement boundary lines shall be constructed on both sides, including box culverts or any other structure at the end of the channel. Access points shall be provided on both sides at 500' maximum intervals. Two ten foot (10') gates or one twenty foot (20') gate for vehicular access are required at a maximum of 1000' intervals and may be placed on either side. The remaining access points shall be four–foot (4') gates."

DRAWING D–75

NOTES

Add: 3. Stucco netting shall be galvanized and shall have one and one–half inch (1–1/2") cover.

Revision	By	Approved	Date
ORIGINAL		M. V. Rollinger	5-20-92

CITY OF SAN DIEGO - STANDARD DRAWING

SUPPLEMENTAL TO REGIONAL STANDARD DRAWING ("D" SERIES)

CITY OF SAN DIEGO STANDARDS COMMITTEE

COORDINATOR R.C.E. 25902 — 2-7-95 DATE

DRAWING NUMBER **SDD-100**

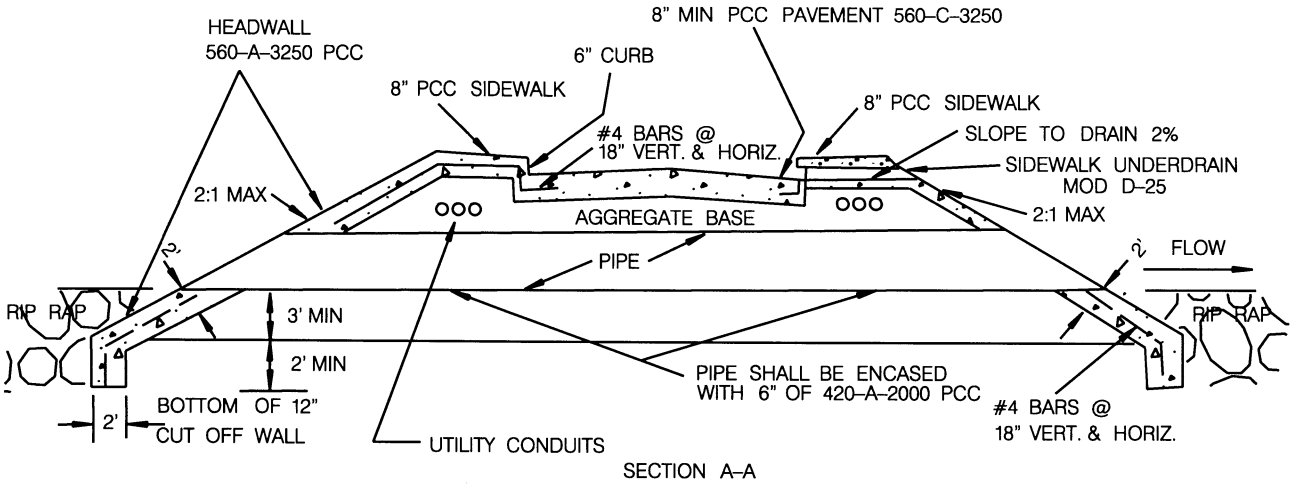

SECTION A-A

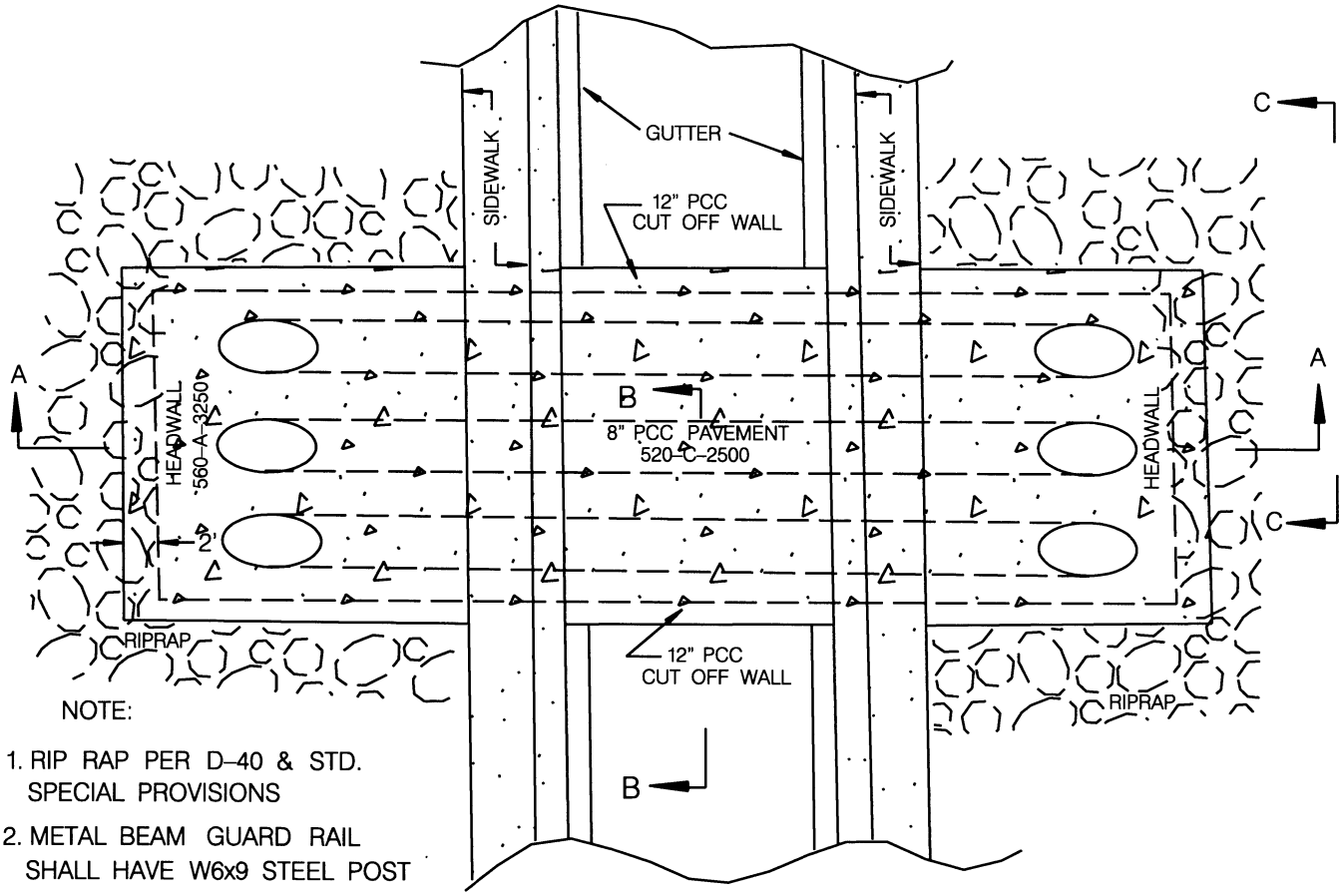

NOTE:

1. RIP RAP PER D-40 & STD. SPECIAL PROVISIONS
2. METAL BEAM GUARD RAIL SHALL HAVE W6x9 STEEL POST
3. SIDEWALK, CURB, PAVEMENT AND HEADWALL'S SHALL BE TIED TOGETHER WITH #4 BARS 18" O.C. HORIZONTAL AND VERTICAL
4. CONCRETE JOINTS PER G-9 AND G-10

SHT. 1 OF 2

Revision	By	Approved	Date
ORIGINAL		J.P.Casey	6-3-83

CITY OF SAN DIEGO - STANDARD DRAWING

CITY OF SAN DIEGO
STANDARDS COMMITTEE

COORDINATOR R.C.E. 25902 — 2-7-95 DATE

TYPICAL FORD

DRAWING NUMBER **SDD-101**

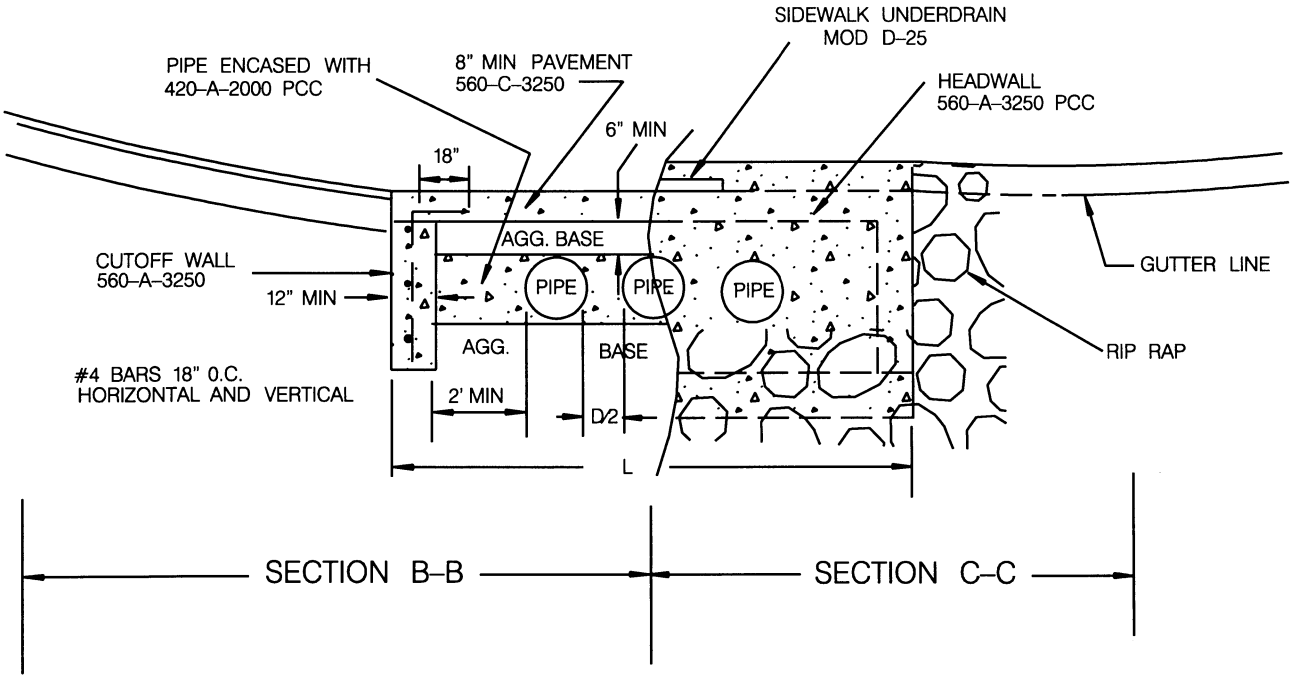

NOTE:

1. HEADWALL LENGTH (L) PER D-30, D-31

Revision	By	Approved	Date
ORIGINAL		J.P.Casey	6-3-83

CITY OF SAN DIEGO - STANDARD DRAWING

TYPICAL FORD

CITY OF SAN DIEGO
STANDARDS COMMITTEE

COORDINATOR R.C.E. 25902 — 2-7-95 DATE

DRAWING NUMBER **SDD-101**

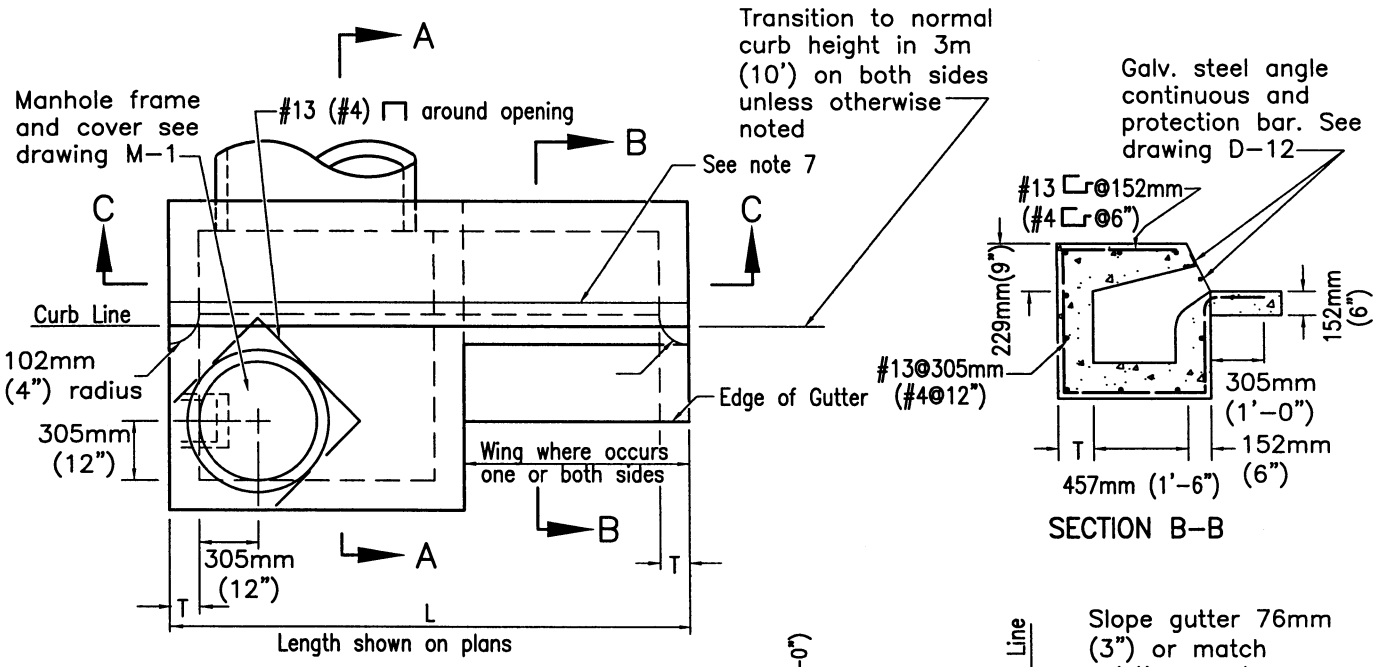

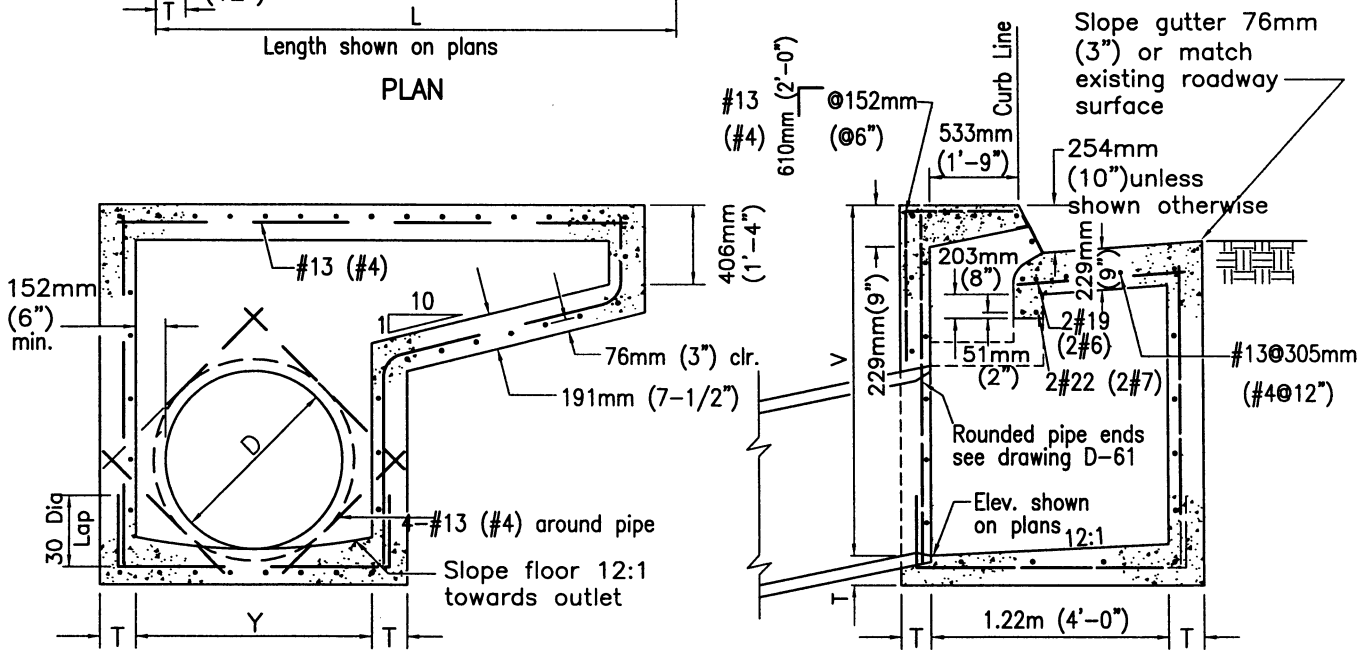

NOTES

1. See Standard Drawings D-11 & D-12 for additional notes and details.
2. Types are designated as follows: (no wing)A, (one wing)A-1, (two wings)A-2.
3. Exposed edges of concrete shall be rounded with a radius of 13mm (1/2").
4. When V exceeds 4' steps shall be installed. See Standard Drawing D-11 for details.
5. Concrete gutter to match adjacent gutters.
6. An expansion joint shall be placed at the ends of the inlet where the curb is to adjoin.
7. Provide 6.35mm (1/4") tooled groove in top slab in line with back of adjacent curb.
8. Surface of top slab shall be sidewalk finished to drain toward street at a slope of 6.35mm (1/4") per foot.
9. Maintain 38mm (1-1/2") clear spacing between reinforcing and surface unless otherwise noted.

LEGEND ON PLANS

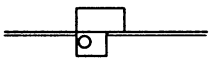

Revision	By	Approved	Date
ORIGINAL		Kercheval	12/75
Add Metric		T. Stanton	03/03
Reformatted		T. Stanton	04/06

SAN DIEGO REGIONAL STANDARD DRAWING

CURB INLET - TYPE A

RECOMMENDED BY THE SAN DIEGO REGIONAL STANDARDS COMMITTEE

T. Stanton 3/10/2003

Chairperson R.C.E. 19246 Date

DRAWING NUMBER **D-1**

SEE SDD-100

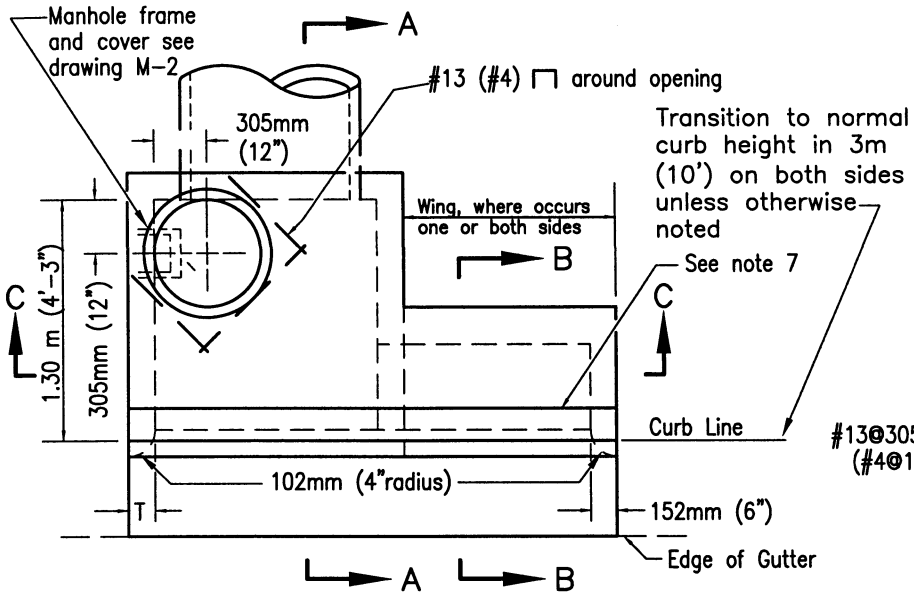

PLAN

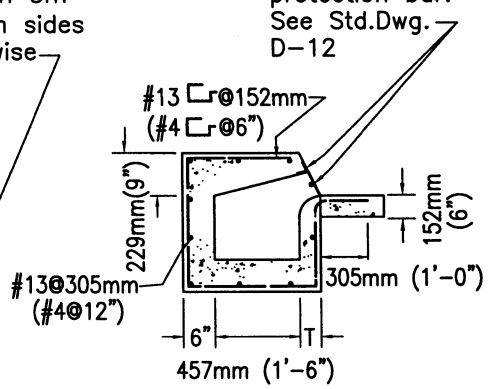

SECTION B-B

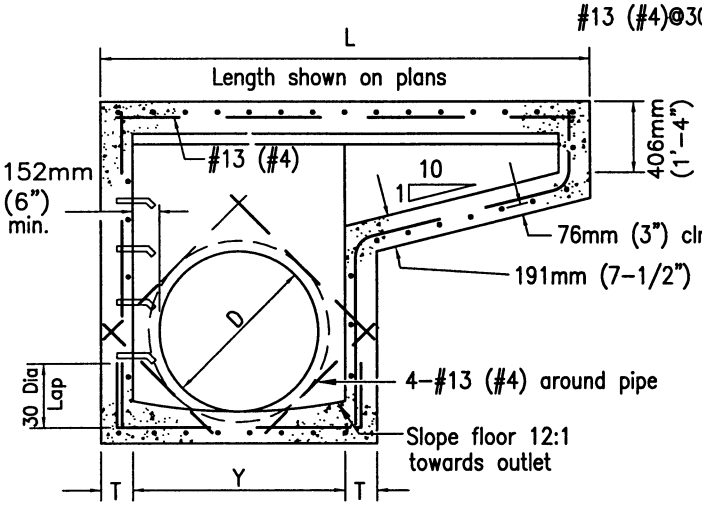

Determined by pipe size-1.22m (4') min., 2.44m (8')max.

SECTION C-C

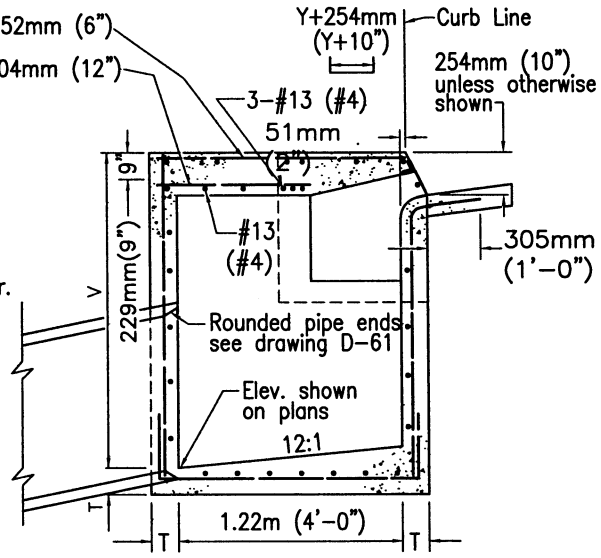

SECTION A-A

NOTES

1. See Standard Drawings D-11 & D-12 for additional notes and details.
2. Types are designated as follows: (no wing)B, (one wing)B-1, (two wings)B-2.
3. Maintain 38mm (1-1/2") clear spacing between reinforcing and surface unless otherwise noted.
4. When V exceeds 4' steps shall be installed. See Standard Drawing D-11 for details.
5. Concrete gutter to match adjacent gutters.
6. An expansion joint shall be placed at the ends of the inlet where the curb is to adjoin.
7. Provide 6.35mm (1/4") tooled groove in top slab in line with back of adjacent curb.
8. Surface of top slab shall be sidewalk finished to drain toward street at a slope of 6.35mm (1/4") per foot.
9. Maintain 38mm (1-1/2") clear spacing between reinforcing and surface unless otherwise noted.

LEGEND ON PLANS

Revision	By	Approved	Date
ORIGINAL		Kercheval	12/75
Add Metric		T. Stanton	03/03
Reformatted		T. Stanton	04/06

SAN DIEGO REGIONAL STANDARD DRAWING

CURB INLET - TYPE B

RECOMMENDED BY THE SAN DIEGO REGIONAL STANDARDS COMMITTEE

T. Stanton 3/10/2003

Chairperson R.C.E. 19246 Date

DRAWING NUMBER **D-2**

SEE SDD-100

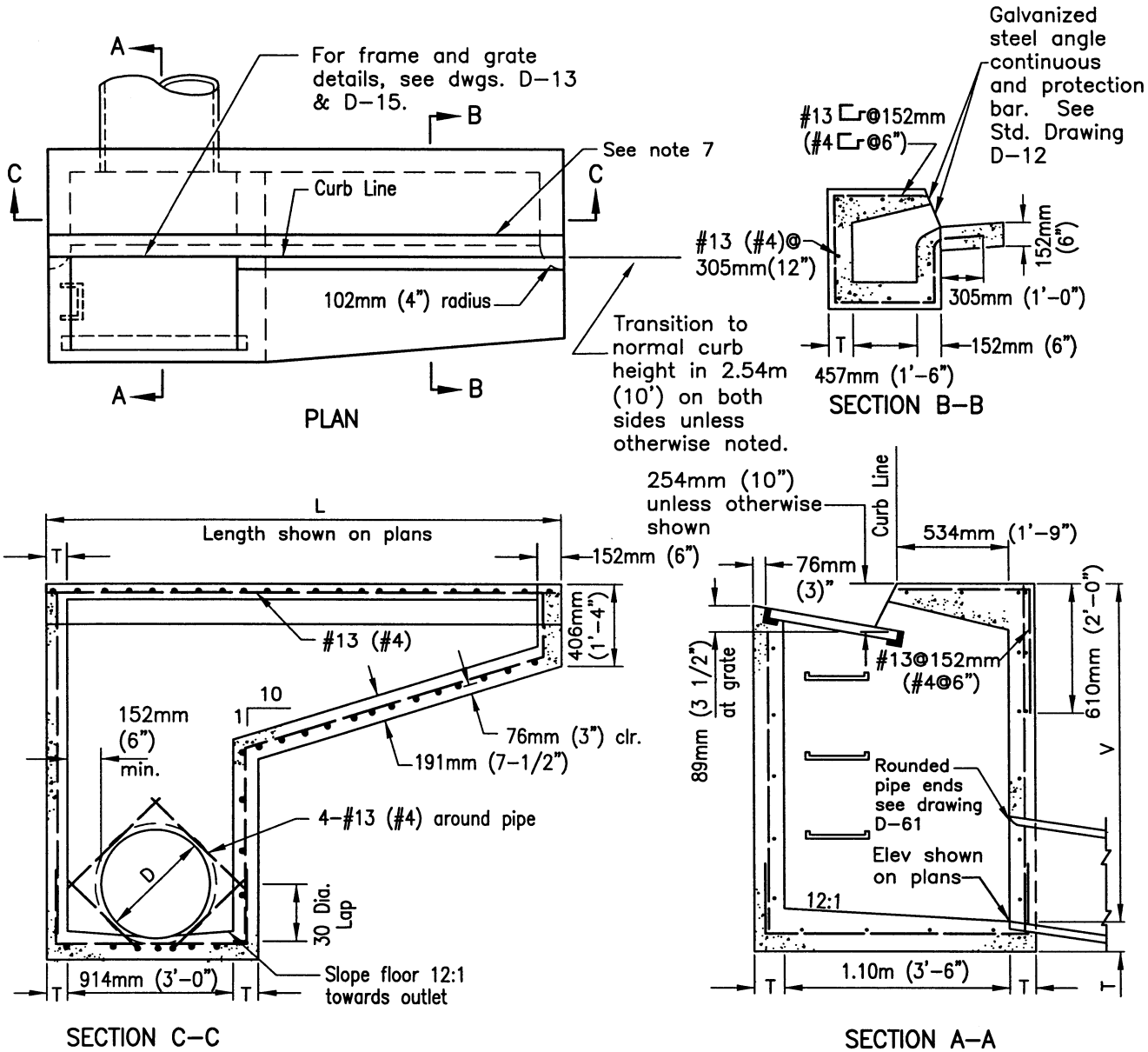

NOTES

1. See Standard Drawings D-11 through D-15 for additional notes and details.
2. Types are designated as follows: (no wing)C, (one wing)C-1, (two wings)C-2.
3. Exposed edges of concrete shall be rounded with a radius of 13mm (1/2").
4. When V exceeds 1.22m (4') steps shall be installed. See Standard Drawing D-11 for details.
5. Concrete gutter to match adjacent gutters.
6. An expansion joint shall be placed at the ends of the inlet where the curb is to adjoin.
7. Provide 6.35mm (1/4") tooled groove in top slab in line with back of adjacent curb.
8. Surface of top slab shall be sidewalk finished to drain toward street at a slope of 6.35mm (1/4") per foot.
9. Maintain 38mm (1-1/2") clear spacing between reinforcing and surface unless otherwise noted.
10. Where inlet is to be constructed on grade and Standard Drawing D-20 concrete apron is required, lift down-grade end of grate as shown on D-20.

LEGEND ON PLANS

Revision	By	Approved	Date
ORIGINAL		Kercheval	12/75
Add Metric		T. Stanton	03/03
Reformatted		T. Stanton	04/06

SAN DIEGO REGIONAL STANDARD DRAWING

CURB INLET - TYPE C

RECOMMENDED BY THE SAN DIEGO REGIONAL STANDARDS COMMITTEE

T. Stanton 3/10/2003

Chairperson R.C.E. 19246 Date

DRAWING NUMBER **D-3**

SEE SDD-100

DIMENSIONS

T=203mm (8") if V is less than 2.44m (8').
T=254mm (10") if V is 2.44m (8') or more.
V=1.52m (5') unless otherwise specified.
V=D + 813mm (32") minimum.
W=2.13m (7') unless otherwise specified.
Y=1.52m (5') unless otherwise specified.
Width of driveway, W, shall be 3m (10') unless otherwise specified.
Elevation of point N shall be 330mm (13") below point H unless otherwise specified.

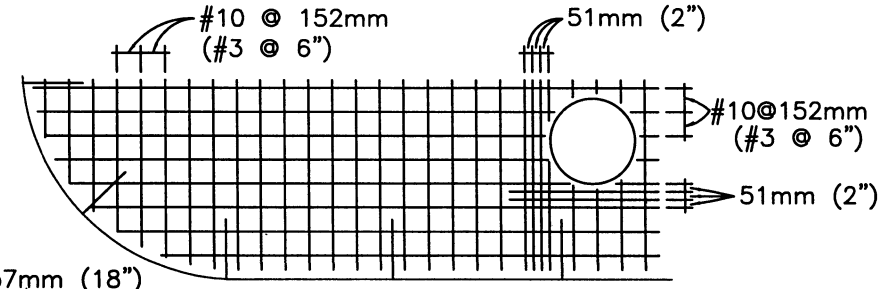

TOP SLAB REINFORCING PLAN

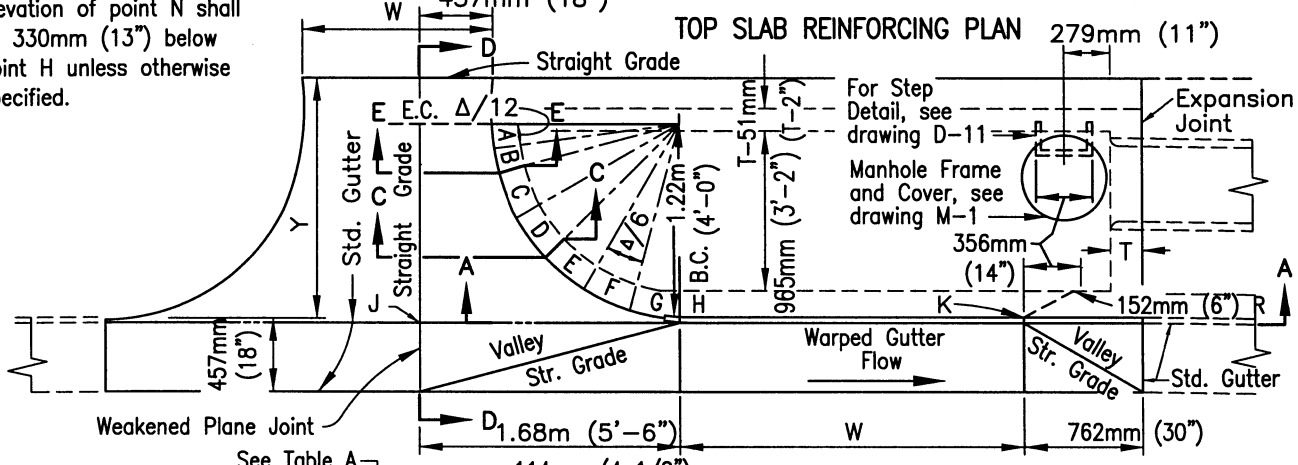

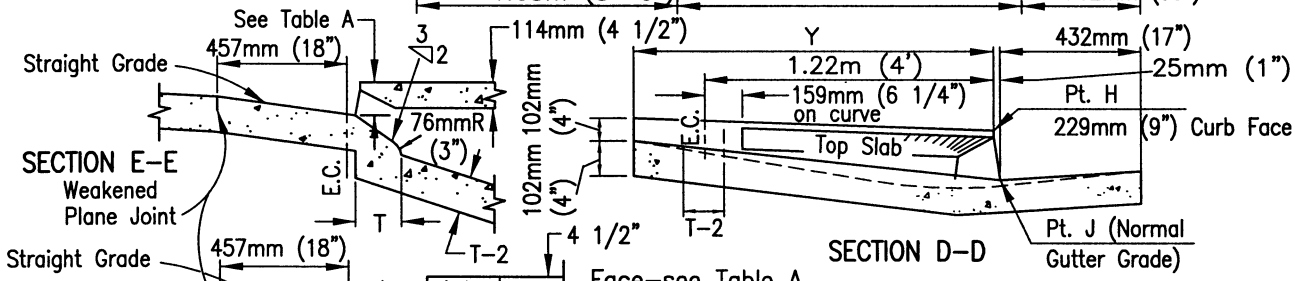

SECTION E-E

SECTION D-D

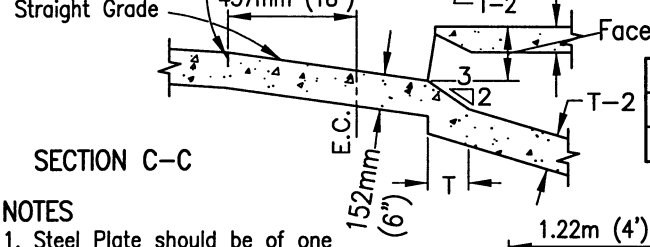

SECTION C-C

	PT	A	B	C	D	E	F	G	H	K	M
METRIC (mm)	F.C.	114	133	152	191	229	229	229	229	229	203
U.S. (inches)	F.C.	4½"	5¼"	6"	7½"	9"	9"	9"	9"	9"	8"

TABLE A

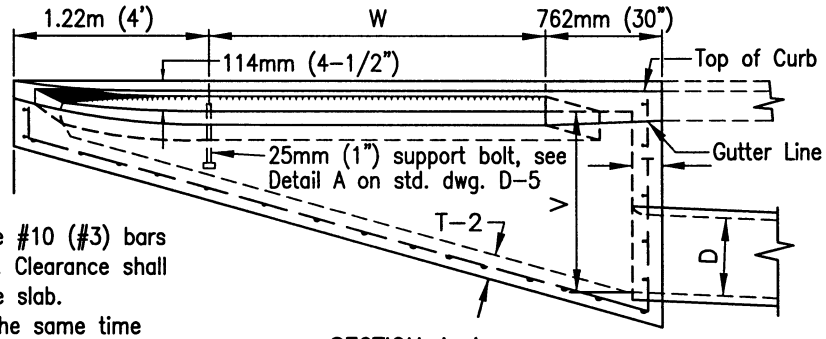

SECTION A-A

NOTES

1. Steel Plate should be of one continuous piece with curve portion a circular arc.
   Length = Width+457mm (18")+circular arc.
2. #13 (#4) rebar 762mm (30") long, 305mm (1') O.C. shall be installed in top of walls for ties to top and gutters.
3. The reinforcing steel in the top slab shall be #10 (#3) bars 152mm (6") O.C. unless otherwise specified. Clearance shall be 38mm (1-1/2") from the bottom of the slab.
4. Concrete for the inlet top to be placed at the same time as the s/w curb and gutter.
5. Concrete shall be 332kg/M³-C-22-Mpa (560-C-3250)
6. Exposed edges of concrete shall be rounded with a radius of 13mm (1/2").
7. Surface of top slab shall be sidewalk finished to drain toward street at a slope not to exceed 2%

Revision	By	Approved	Date
ORIGINAL		Kercheval	12/75
Add Metric		T. Stanton	03/03
Reformatted		T. Stanton	04/06

SAN DIEGO REGIONAL STANDARD DRAWING

CURB INLET - TYPE D

RECOMMENDED BY THE SAN DIEGO REGIONAL STANDARDS COMMITTEE

T. Stanton 3/10/2003

Chairperson R.C.E. 19246 Date

DRAWING NUMBER **D-4**

SEE SDD-100

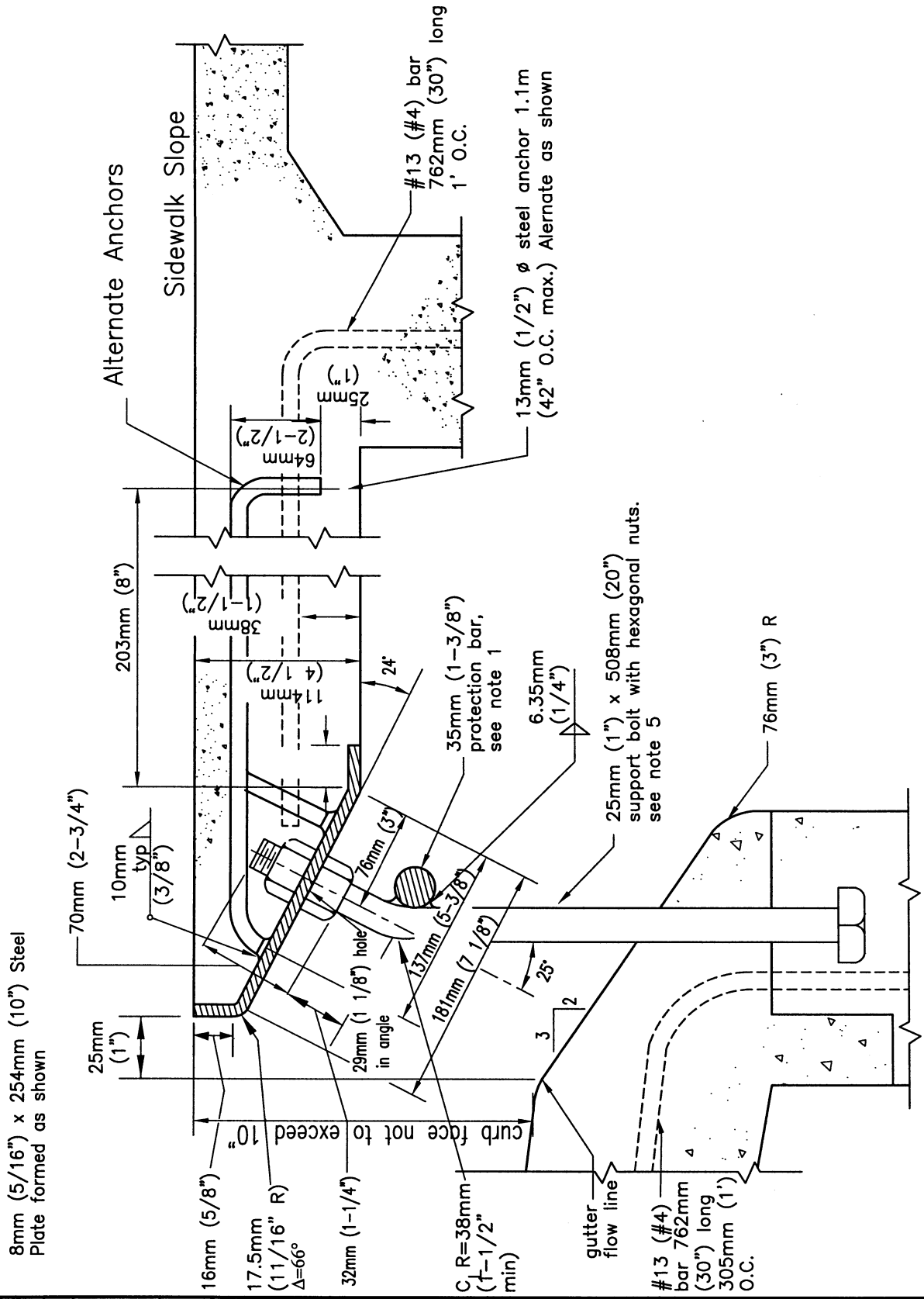

Revision	By	Approved	Date
ORIGINAL		Kercheval	12/75
Add Metric		T. Stanton	03/03
Reformatted		T. Stanton	04/06

SAN DIEGO REGIONAL STANDARD DRAWING

CURB INLET - TYPE D (DETAILS)

RECOMMENDED BY THE SAN DIEGO REGIONAL STANDARDS COMMITTEE

T. Stanton 3/10/2003

Chairperson R.C.E. 19246 Date

DRAWING NUMBER **D-5A**

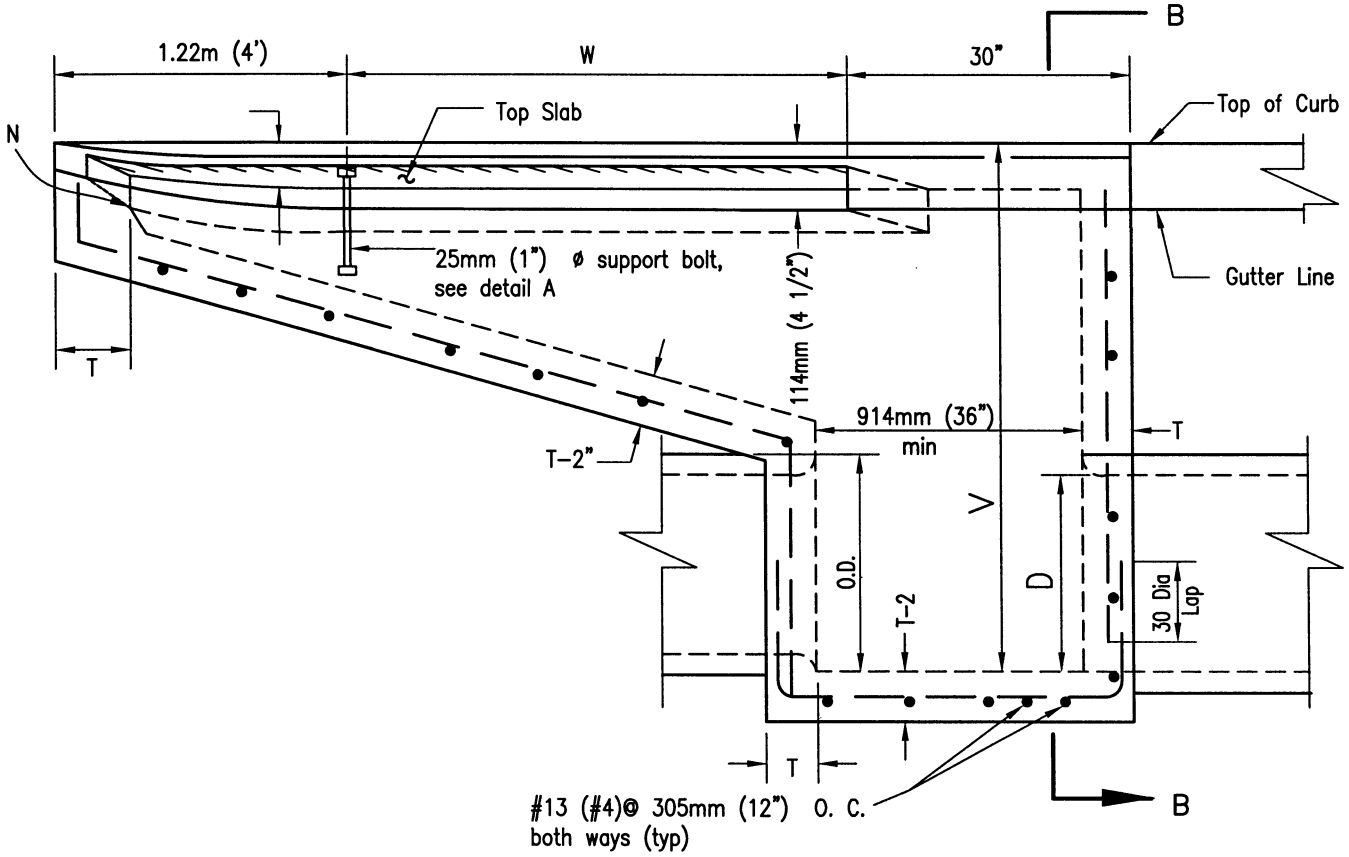

SECTION A–A MODIFIED

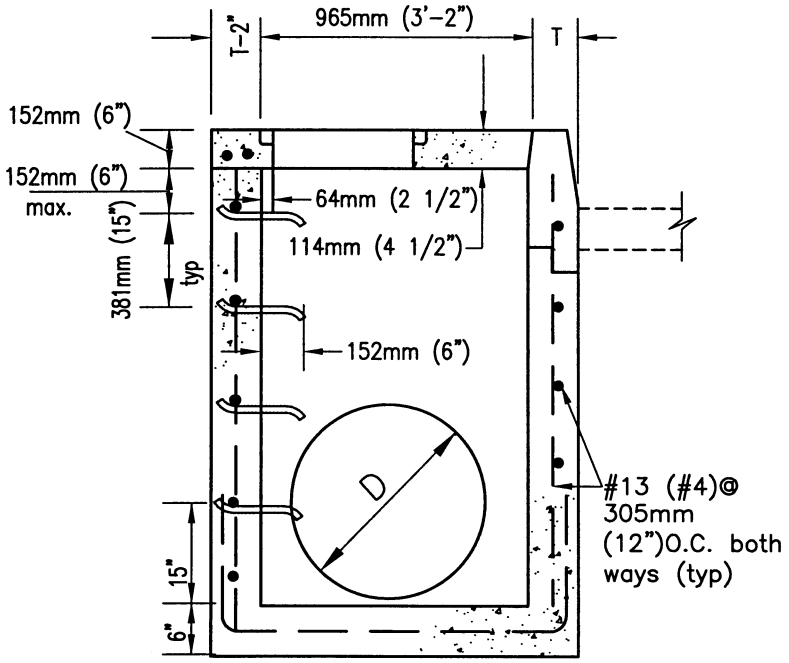

SECTION B–B

NOTES:

1. A plain, round steel protection bar 25mm (1") in dia. shall be installed. Bar shall be embedded 127mm (5") at each end.
2. Leave 203mm (8") hole blocked out in the bottom placing of concrete for bolts placed at the same time as gutter.
3. All exposed metal parts shall be galvanized.
4. All galvanizing damaged by welding shall receive two coats of aluminum paint.
5. Support bolts shall be spaced at not more than 1.52m (5'-0") O.C.
6. Adjusting nuts to be tightened and secured in placed when steel plate is in proper position.

Revision	By	Approved	Date
ORIGINAL		Kercheval	12/75
Add Metric		T. Stanton	03/03
Reformatted		T. Stanton	04/06

SAN DIEGO REGIONAL STANDARD DRAWING

CURB INLET - TYPE D (DETAILS)

RECOMMENDED BY THE SAN DIEGO REGIONAL STANDARDS COMMITTEE

T. Stanton 3/10/2003

Chairperson R.C.E. 19246 Date

DRAWING NUMBER **D-5B**

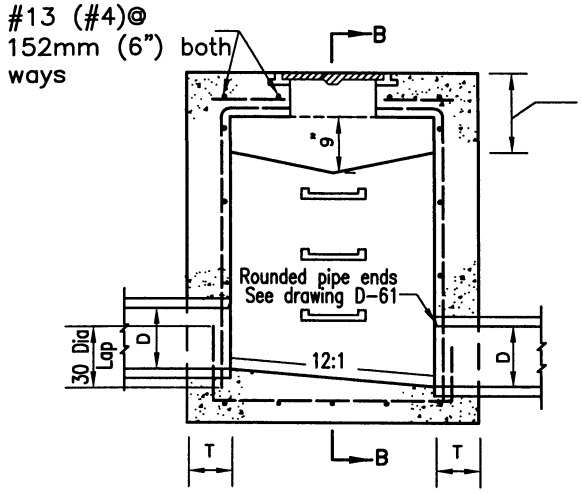

SECTION A–A

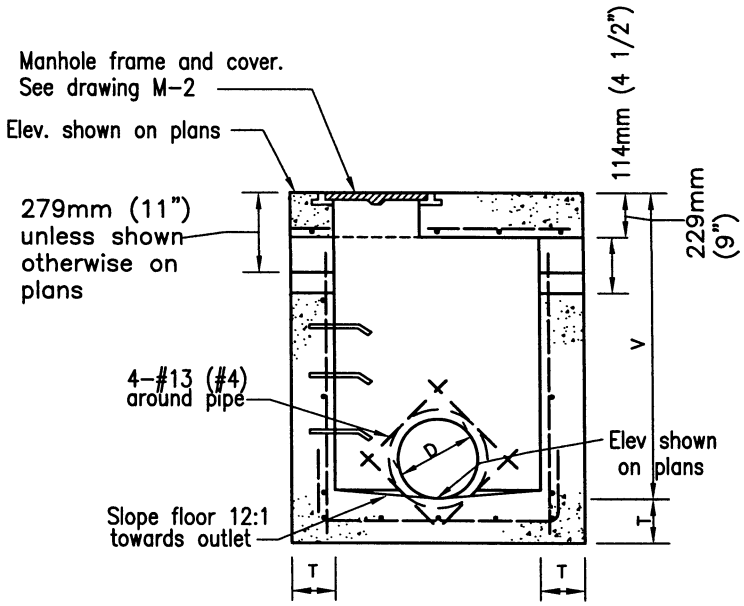

SECTION B–B

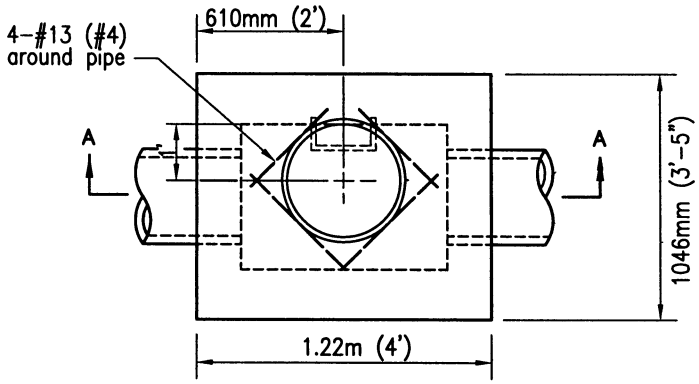

PLAN

NOTE:

1. See Standard Drawing D–11 for additional notes and details.
2. When V exceeds 1.22m (4') steps shall be installed. See Standard Drawing D–11 for details.
3. Exposed edges of concrete shall be rounded with a radius of 13mm (1/2").
4. Construct openings on both sides unless otherwise shown on plans.
5. Maintain 38mm (1–1/2") clear spacing between reinforcing and surface.
6. Install 25mm (1") steel protection bar.

LEGEND ON PLANS

Revision	By	Approved	Date
ORIGINAL		Kercheval	12/75
Add Metric		T. Stanton	03/03
Reformatted		T. Stanton	04/06

SAN DIEGO REGIONAL STANDARD DRAWING

CATCH BASIN - TYPE F

RECOMMENDED BY THE SAN DIEGO REGIONAL STANDARDS COMMITTEE

3/01/2003

Chairperson R.C.E. 19246 Date

DRAWING NUMBER **D-7**

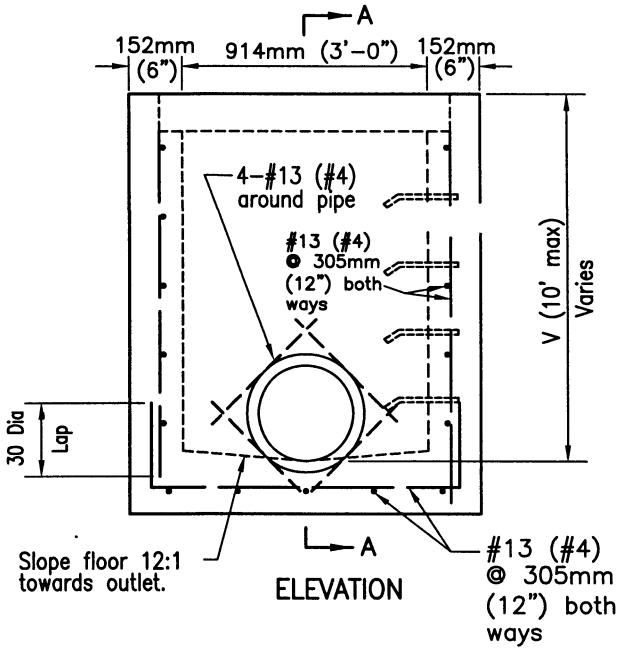

ELEVATION

NOTES

1. See Standard Drawing D-11 for additional notes and details.
2. When V exceeds 1.22m (4'), steps shall be installed. See Standard Drawing D-11 for details.
3. Maintain 38mm (1-1/2") clear spacing between reinforcing and surface.
4. Increase in allowable depth subject to approval by Agency.
5. Section A-A shows 3 sizes and shall not imply that an interior wall is to be built for the structures with with double or triple frame and grate.
6. Exposed edges of concrete shall be rounded with radius of 13mm (1/2").
7. Designate types as follows: Single G-1, Double G-2 and Triple G-3.
8. Only end bearing grates shall be used. See Std. Drawing D-15.

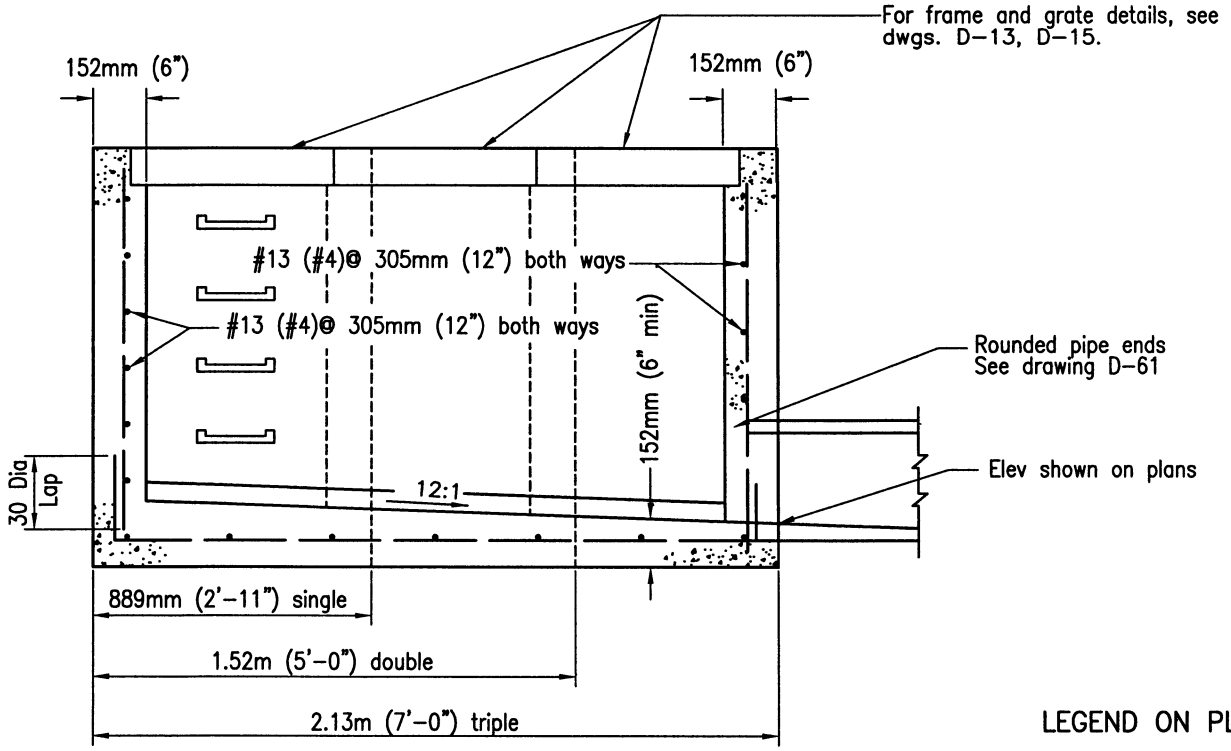

SECTION A-A

LEGEND ON PLANS

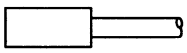

Revision	By	Approved	Date
ORIGINAL		Kercheval	12/75
Add Metric		T. Stanton	03/03
Reformatted		T. Stanton	04/06

SAN DIEGO REGIONAL STANDARD DRAWING

CATCH BASIN - TYPE G

RECOMMENDED BY THE SAN DIEGO REGIONAL STANDARDS COMMITTEE

T. Stanton 3/10/2003

Chairperson R.C.E. 19246 Date

DRAWING NUMBER **D-8**

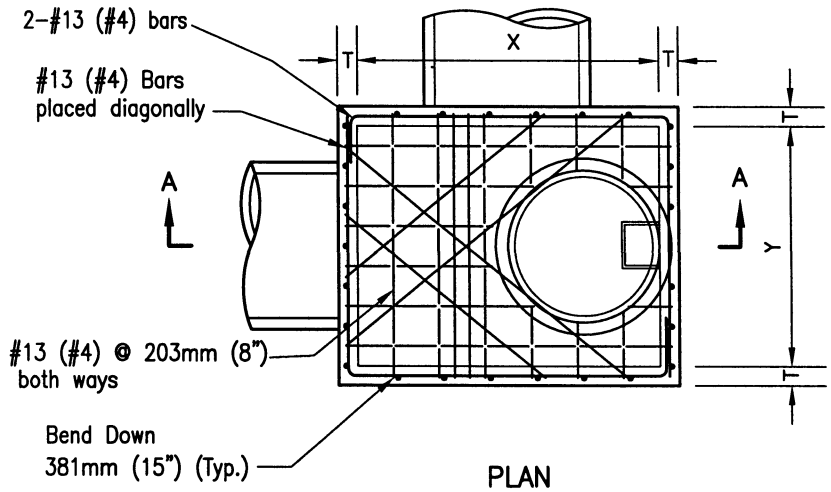

PLAN

TYPE	PIPE DIA.	X	Y	Z
A 4	up to 991mm (39")	1.22m (4')	1.22m (4')	1.83m (6')
A 5	1.1m (42") to 1.22m (48")	1.52m (5')	1.22m (4')	1.83m (6')
A 6	1.30m (51") to 1.50m (60")	1.83m (6')	1.22m (4')	1.83m (6')
A 7	1.60m (63") to 1.80m (72")	2.13m (7')	1.22m (4')	2.13m (7')
A 8	1.90m (75") to 2.13m (84")	2.44m (8')	1.22m (4')	2.44m (8')

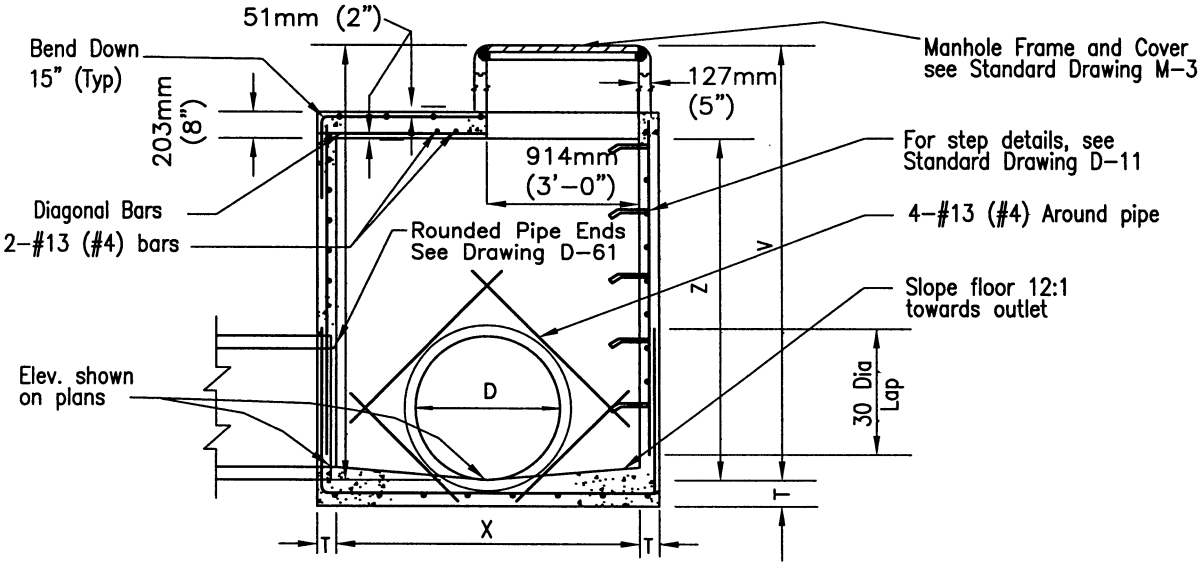

SECTION A-A

NOTES

1. See Standard Drawing D-11 for additional notes and details.
2. Concrete base shall be 332kg/M^3-C-22Mpa (560-C-3250)
3. All precast components shall be reinforced with 6.35mm (1/4") diameter steel, wound spirally on 102mm (4") centers.
4. All joints shall be set in Class C mortar.
5. Maintain 38mm (1 1/2") clear spacing between reinforcing and surface unless otherwise noted.
6. Exposed edges of concrete shall be rounded with a radius of 13mm (1/2").
7. Manhole cover to be designated "Storm Drain".

LEGEND ON PLANS

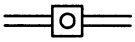

Revision	By	Approved	Date
ORIGINAL		Kercheval	12/75
Add Metric		T. Stanton	03/03
Reformatted		T. Stanton	04/06

SAN DIEGO REGIONAL STANDARD DRAWING

STORM DRAIN CLEANOUT - TYPE A

RECOMMENDED BY THE SAN DIEGO REGIONAL STANDARDS COMMITTEE

3/10/2003

Chairperson R.C.E. 19246 Date

DRAWING NUMBER D-9

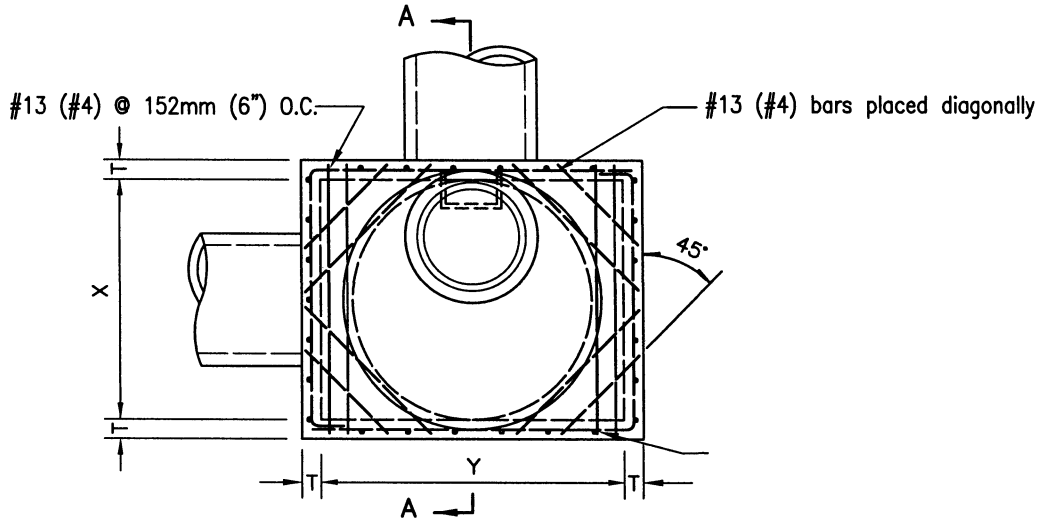

PLAN

TYPE	PIPE DIAMETER	X	Y	Z
A 4	up to 1.30m (51")	1.22m (4')	1.53m (5')	1.53m (5')
A 5	1.37m (54") to 1.52m (60")	1.22m (4')	1.83m (6')	1.83m (6')
A 6	1.60m (63") to 1.80m (69")	1.22m (4')	2.13m (7')	2.13m (7')
A 7	1.83m (72") to 2.10m (81")	1.22m (4')	2.44m (8')	2.44m (8')
A 8	2.13m (84") to 2.30m (90")	1.22m (4')	2.74m (9')	2.74m (9')

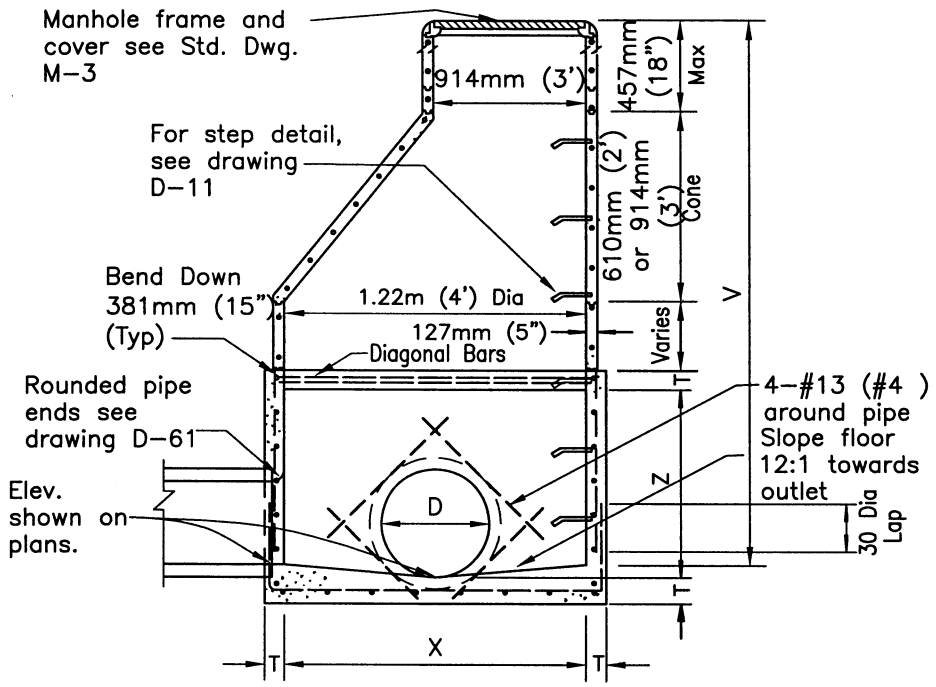

SECTION A-A

NOTES

1. See Standard Drawing D-11 for additional notes and details.
2. All joints shall be set in Class C mortar.
3. All precast components shall be reinforced with 6.35mm (1/4") diameter steel wound spirally on 102mm (4") centers.
4. Maintain 38mm (1-1/2") clear spacing between reinforcing and surface.
5. Concrete base shall be 332kg/M3-C-22-Mpa (560-C-3250).
6. Exposed edges of concrete shall be rounded with a radius of 13mm (1/2").
7. Manhole cover to be designated "Storm Drain".

LEGEND ON PLANS

= =[O]= =

Revision	By	Approved	Date
ORIGINAL		Kercheval	12/75
Add Metric		T. Stanton	03/03
Reformatted		T. Stanton	04/06

SAN DIEGO REGIONAL STANDARD DRAWING

STORM DRAIN CLEANOUT - TYPE B

RECOMMENDED BY THE SAN DIEGO REGIONAL STANDARDS COMMITTEE

T. Stanton 3/10/2003

Chairperson R.C.E. 19246 Date

DRAWING NUMBER D-10

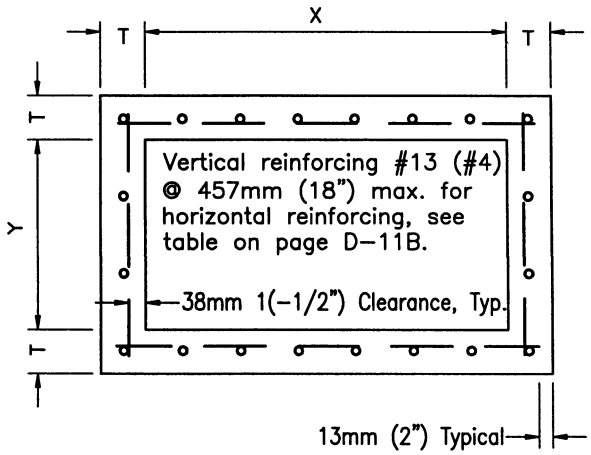

TYPICAL BOX SECTION

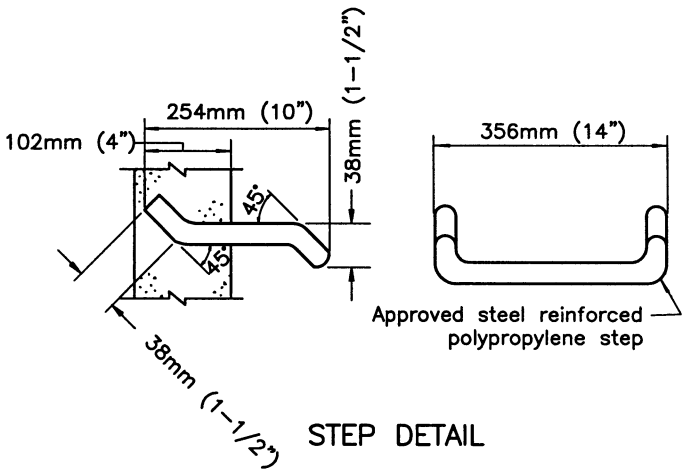

STEP DETAIL

NOTES

1. Concrete shall be 332kg/M^3-C-22-Mpa (560-C-3250) unless otherwise noted.
2. Reinforcing steel shall comply with this drawing unless otherwise specified.
3. Reinforcing steel shall be intermediate grade deformed bars conforming to latest ASTM specifications.
4. Bends shall be in accordance with latest ACI code.
5. Minimum splice length for reinforcing shall be 30 diameters.
6. Floor shall have a wood trowel finish and, except where used as junction boxes, shall have a minimum slope of 1:12 toward the outlet.
7. Depth V is measured from the top of the structure to the flowline of the box.
8. Wall thickness and reinforcing steel required may be decreased in accordance with table above.
9. Wall thickness shall be stepped on the outside of the box.
10. When the structure depth V exceeds 1.21m (4'), steps shall be cast into the wall at 381mm (15") intervals from 381mm (15") above floor to within 305mm (12") of top of structure. Where possible place steps in wall without pipe opening, otherwise over opening of smallest diameter.
11. Alternate step may be an approved steel reinforced polypropylene step.
12. Upon approval of the Agency and the Engineer, as defined by Section 6703 of the Business and Professions Code, the use of precast storm structures is acceptable as an alternate to cast-in-place. Precast units shall conform to ASTM standards and be manufactured in a permanent facility designed for that purpose.

Revision	By	Approved	Date
ORIGINAL		Kercheval	12/75
Add Metric		T. Stanton	03/03
Reformatted		T. Stanton	04/06

SAN DIEGO REGIONAL STANDARD DRAWING

INLETS AND CLEANOUTS NOTES AND DETAILS

RECOMMENDED BY THE SAN DIEGO REGIONAL STANDARDS COMMITTEE

T. Stanton 3/01/2003

Chairperson R.C.E. 19246 Date

DRAWING NUMBER **D-11A**

BOX SECTION REINFORCEMENT			
MAXIMUM SPAN X or Y	DEPTH V	THICKNESS T	HOR. & FLR. REINF.
914mm (3'–0") to 1.22m (4'–0")	1.22m (4'–0")	152mm (6")	#13 (#4) @ 457mm (18")
1.24m (4'–1") to 2.13m (7'–0")		152mm (6")	#13 (#4) @ 305mm (12")
2.16m (7'–1") to 2.44m (8'–0")		152mm (6")	#13 (#4) @ 203mm (8")
914mm (3'–0") to 1.22m (4'–0")	1.24m to 2.44m (4'–1"to 8'–0")	152mm (6")	#13 (#4) @ 457mm (18")
1.24m (4'–1") to 1.52m (5'–0")		152mm (6")	#13 (#4) @ 305mm (12")
1.55m (5'–1") to 1.83m (6'–0")		152mm (6")	#13 (#4) @ 203mm (8")
1.85m (6'–1") to 2.44m (8'–0")		152mm (6")	#13 (#4) @ 152mm (6")
914mm (3'–0") to 1.22m (4'–0")	2.46m to 3.66m (8'–1" to 12'–0")	152mm (6")	#13 (#4) @ 381mm (15")
1.24m (4'–1") to 1.52m (5'–0")		203mm (8")	#13 (#4) @ 305mm (12")
1.55m (5'–1") to 1.83m (6'–0")		203mm (8")	#13 (#4) @ 203mm (8")
1.85m (6'–1") to 2.44m (8'–0")		203mm (8")	#13 (#4) @ 152mm (6")
914mm (3'–0") to 1.22m (4'–0")	3.68m to 4.88m (12'–1" to 16'–0")	203mm (8")	#13 (#4) @ 305mm (12")
1.24m (4'–1") to 1.52m (5'–0")		203mm (8")	#13 (#4) @ 305mm (12")
1.55m (5'–1") to 1.83m (6'–0")		203mm (8")	#13 (#4) @ 203mm (8")
1.85m (6'–1") to 2.13m (7'–0")		203mm (8")	#13 (#4) @ 152mm (6")
2.13m (7'–1") to 2.44m (8'–0")		203mm (8")	#13 (#5) @ 203mm (8")
914mm (3'–0") to 1.22m (4'–0")	4.90m to 6.10m (16'–1" to 20'–0")	203mm (8")	#13 (#4) @ 305mm (12")
1.24m (4'–1") to 1.52m (5'–0")		254mm (10")	#13 (#4) @ 305mm (12")
1.55m (5'–1") to 1.83m (6'–0")		254mm (10")	#13 (#4) @ 203mm (8")
1.85m (6'–1") to 2.13m (7'–0")		254mm (10")	#13 (#4) @ 152mm (6")
2.13m (7'–1") to 2.44m (8'–0")		254mm (10")	#13 (#5) @ 203mm (8")
914mm (3'–0") to 1.22m (4'–0")	6.12m to 7.32m (20'–1" to 24'–0")	203mm (8")	#13 (#4) @ 305mm (12")
1.24m (4'–1") to 1.52m (5'–0")		254mm (10")	#13 (#4) @ 305mm (12")
1.55m (5'–1") to 1.83m (6'–0")		254mm (10")	#13 (#4) @ 203mm (8")
1.85m (6'–1") to 2.13m (7'–0")		254mm (10")	#13 (#4) @ 152mm (6")
2.13m (7'–1") to 2.44m (8'–0")		305mm (12")	#13 (#5) @ 203mm (8")

HORIZONTAL REINFORCING

Revision	By	Approved	Date
ORIGINAL		Kercheval	12/75
Add Metric		T. Stanton	03/03
Reformatted		T. Stanton	04/06

SAN DIEGO REGIONAL STANDARD DRAWING

INLETS AND CLEANOUTS NOTES AND DETAILS

RECOMMENDED BY THE SAN DIEGO REGIONAL STANDARDS COMMITTEE

T. Stanton 3/01/2003

Chairperson R.C.E. 19246 Date

DRAWING NUMBER **D-11B**

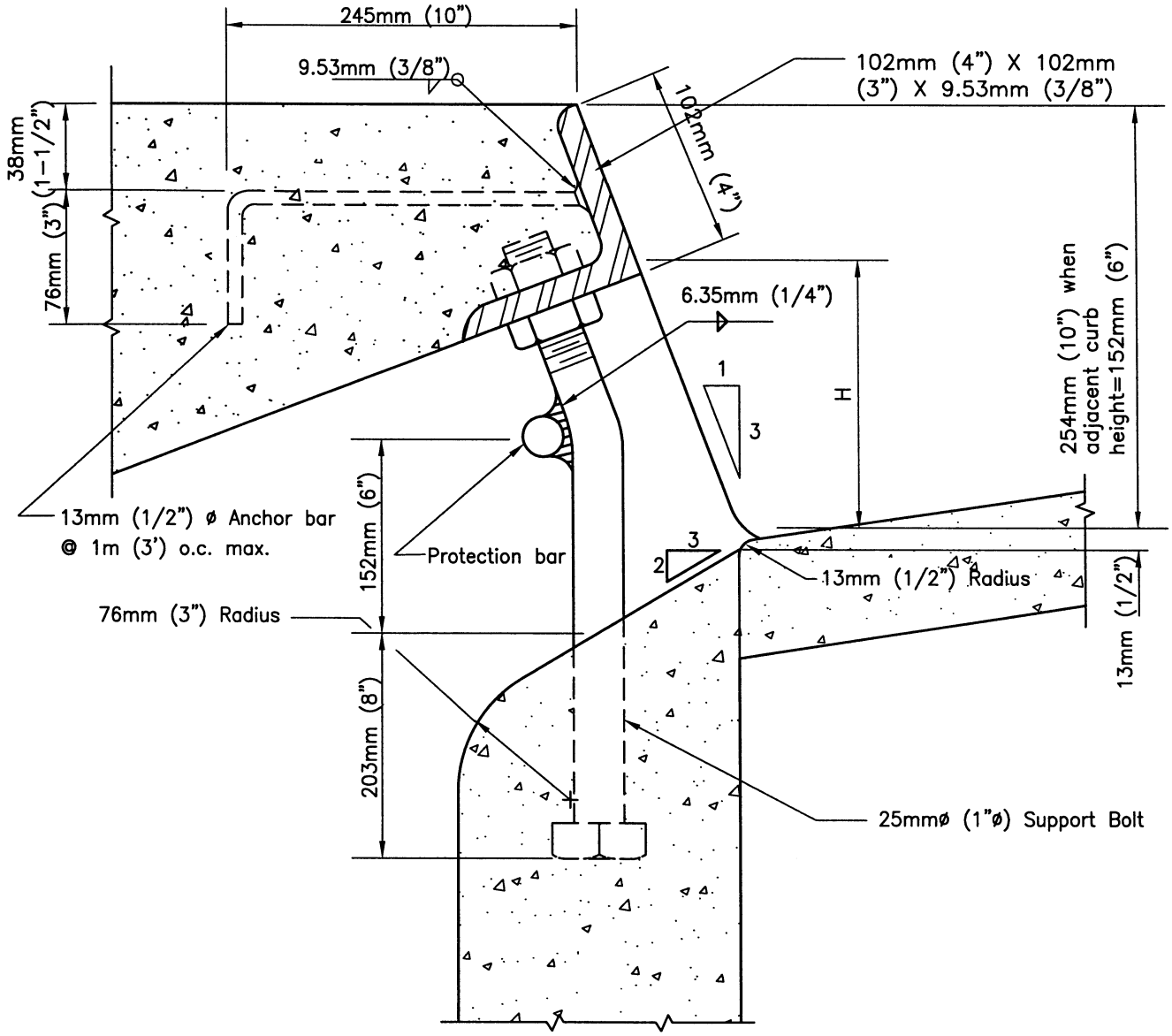

NOTES

1. Face angle shall be cast into structure continuous for the full length "L".
2. All exposed metal parts shall be hot-dipped galvanized after fabrication.
3. When curb inlet opening height (H) exceeds 152mm (6") install 25mm (1"ø) steel protection bar.
4. Install additional bars at 89mm (3-1/2") clear spacing above first bar when opening exceeds 330mm (13").
5. When curb inlet opening length exceeds 2.44m (8') install 25mm (1"ø) steel support bolts, spaced at not more than 1.52m (5') o.c.

Revision	By	Approved	Date
ORIGINAL		Kercheval	12/75
Add Metric		T. Stanton	03/03
Reformatted		T. Stanton	04/06

SAN DIEGO REGIONAL STANDARD DRAWING

CURB INLET OPENING

RECOMMENDED BY THE SAN DIEGO REGIONAL STANDARDS COMMITTEE

T. Stanton 3/10/2003

Chairperson R.C.E. 19246 Date

DRAWING NUMBER **D-12**

SEE SDD-100

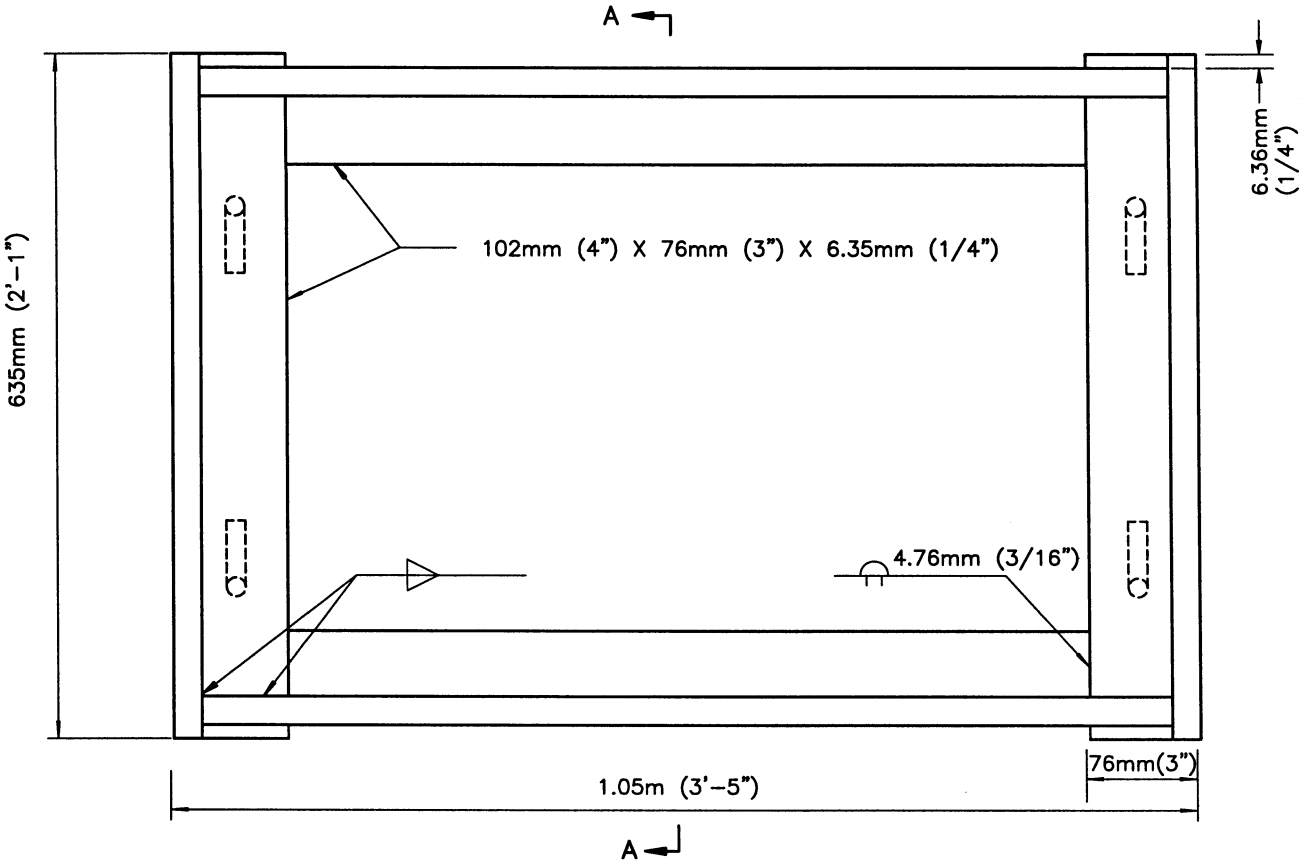

PLAN

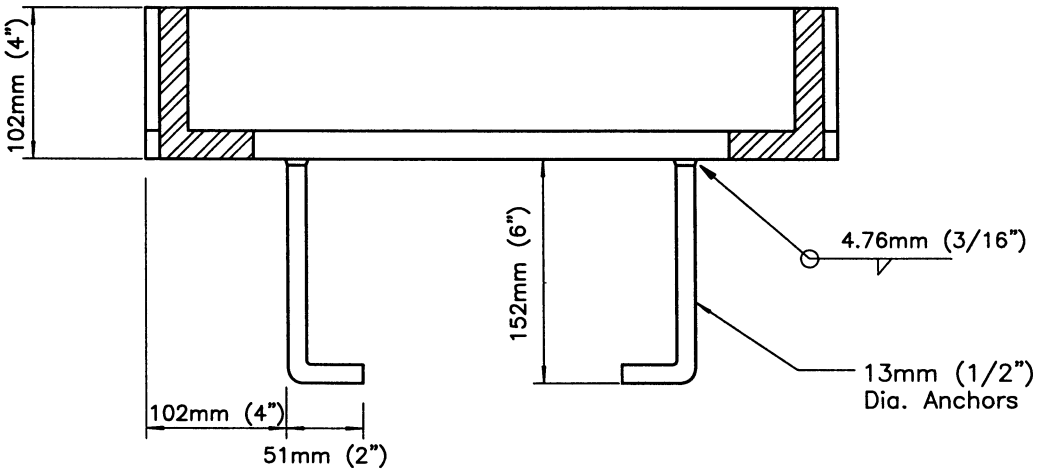

SECTION A–A

NOTE
Hot dip galvanize all parts after fabrication.

Revision	By	Approved	Date
ORIGINAL		Kercheval	12/75
Add Metric		T. Stanton	03/03
Reformatted		T. Stanton	04/06

SAN DIEGO REGIONAL STANDARD DRAWING

WELDED STEEL GRATE FRAME

RECOMMENDED BY THE SAN DIEGO REGIONAL STANDARDS COMMITTEE

T. Stanton 3/01/2003

Chairperson R.C.E. 19246 Date

DRAWING NUMBER **D-13**

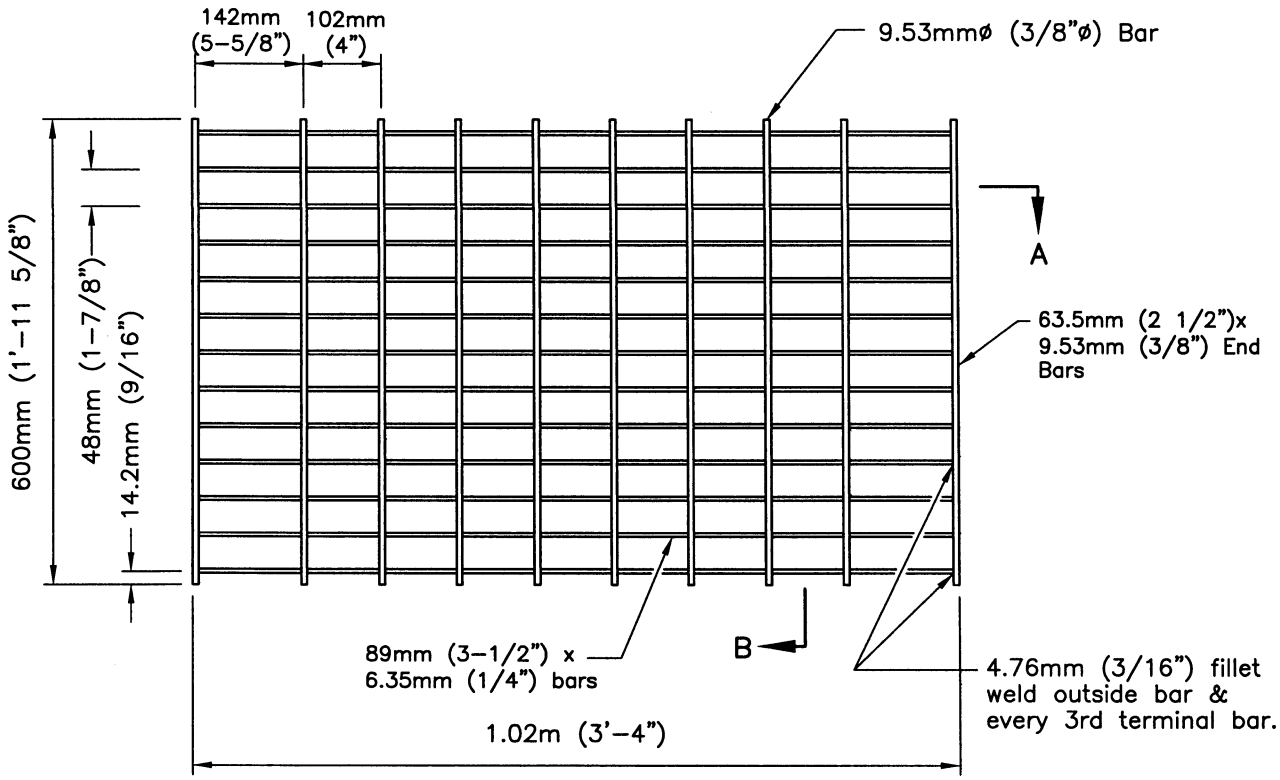

PLAN

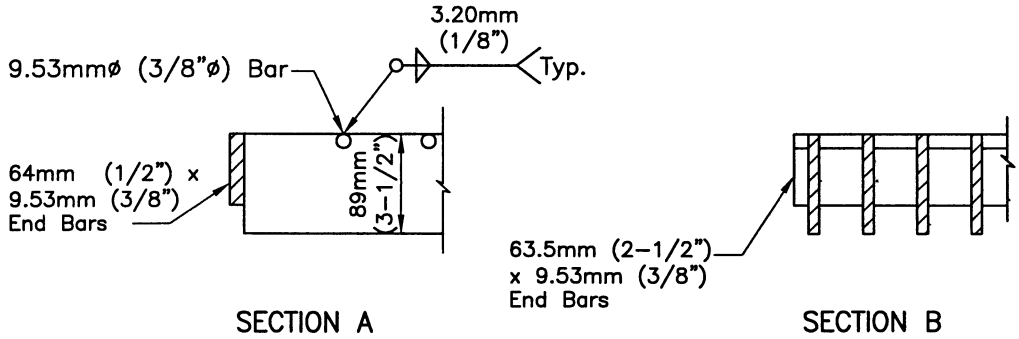

SECTION A

SECTION B

NOTES
1. Hot dip galvanize all parts after fabrication.
2. Dimensions to centerline of bars unless otherwise noted.
3. Weight: 64kg (143 pounds).
4. Not to be used in pedestrian areas.

Revision	By	Approved	Date
ORIGINAL		Kercheval	12/75
Add Metric		T. Stanton	03/03
Reformatted		T. Stanton	04/06

SAN DIEGO REGIONAL STANDARD DRAWING

DRAINAGE STRUCTURE GRATE

RECOMMENDED BY THE SAN DIEGO REGIONAL STANDARDS COMMITTEE

T. Stanton 3/01/2003

Chairperson R.C.E. 19246 Date

DRAWING NUMBER **D-15**

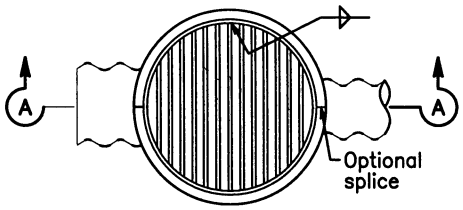

Punch 25mm (1") hole in CSP
Place pipe so bars of grate will be parallel with main surface flow.

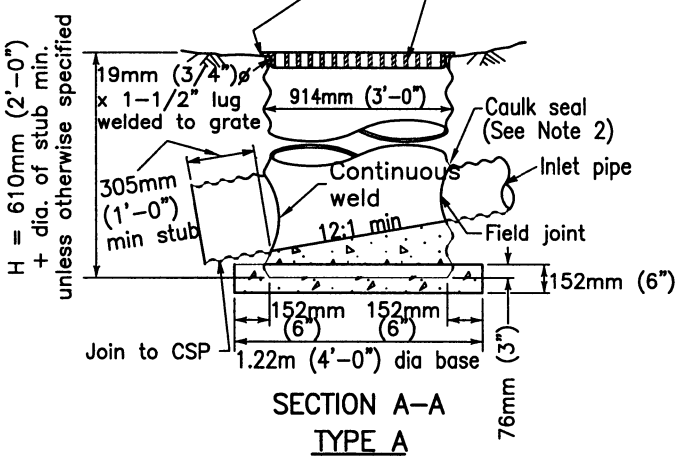

SECTION A-A
TYPE A

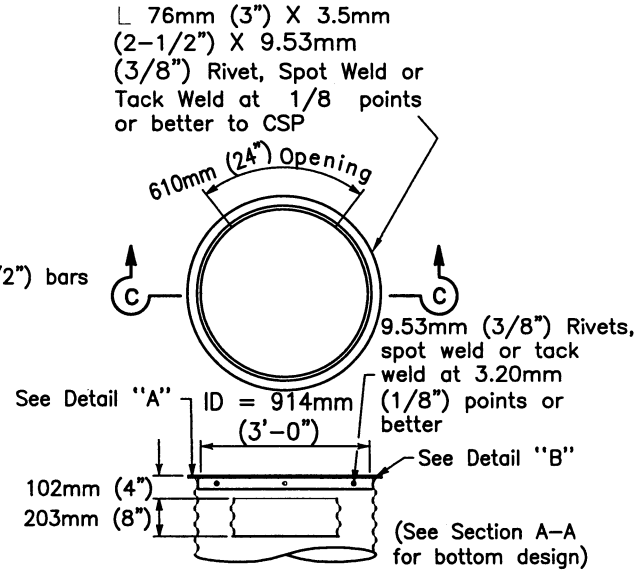

SECTION C-C
TYPE B

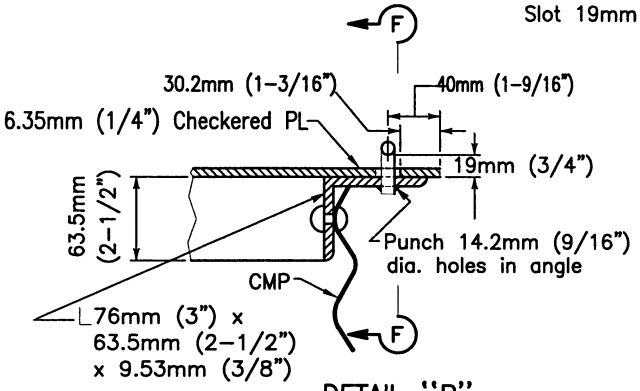

DETAIL "B"

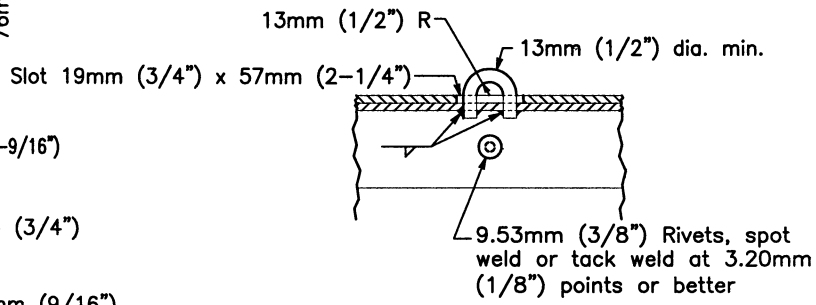

SECTION F-F

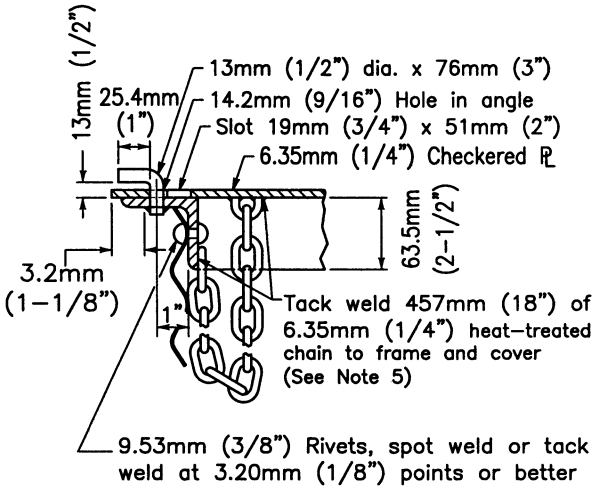

DETAIL "A"

NOTES

1. All components shall be galvanized.
2. Inlet and outlet pipes shall be set at factory and positioned as shown on plans
3. Ladders and Steps: None required where "H" is 1.10m (3'-6") or less. Where "H" is between 1.10m (3'-6") and 1.50m (4'-11") place one step + 406mm (16") above the floor. If "H " is 1.52m (5') or more install a ladder placing lowest rung 406mm (16") above the floor and the highest rung not more than 356mm (14") below top of inlet. Place single step or ladder in wall with wall opening.
4. See Standard Drawing D-17 for additional details.
5. Grate to be provided when specified.
6. Grate detail shall be as shown on Standard Drawing D-17 unless otherwise approved by Agency.

Revision	By	Approved	Date
ORIGINAL		Kercheval	12/75
Add Metric		T. Stanton	03/03
Reformatted		T. Stanton	04/06

SAN DIEGO REGIONAL STANDARD DRAWING

CORRUGATED STEEL PIPE INLETS TYPES A AND B

RECOMMENDED BY THE SAN DIEGO REGIONAL STANDARDS COMMITTEE

3/10/2003

Chairperson R.C.E. 19246 Date

DRAWING NUMBER **D-16**

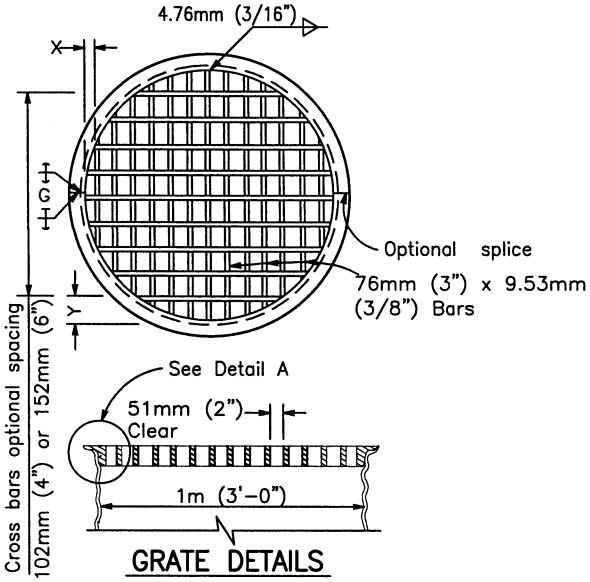

GRATE DETAILS

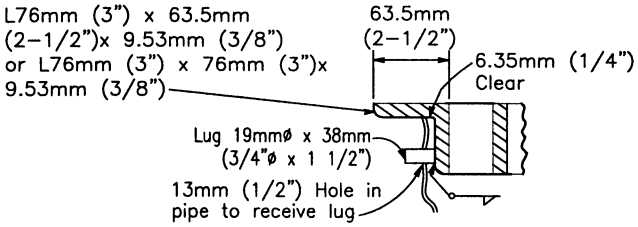

DETAIL A

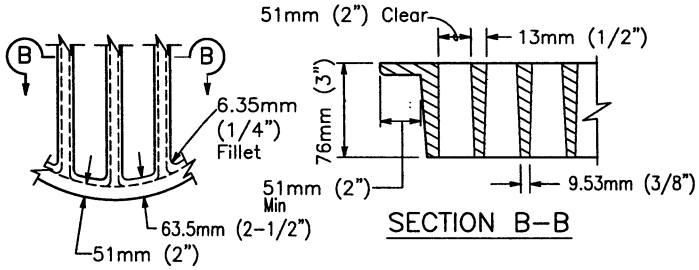

SECTION B-B

ALTERNATIVE CAST NODULAR IRON GRATE
OR CAST STEEL GRATE

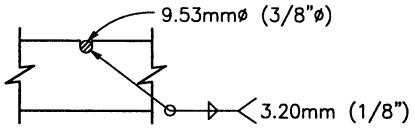

3/8"ø Cross bars may be fillet welded, resistance welded or electroforged to bearing bars.

CROSS BAR DETAIL TYPE
WELDED STEEL GRATE

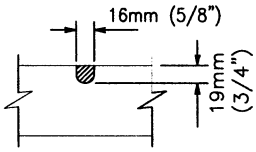

CROSS BAR DETAIL
ALTERNATIVE CAST NODULAR
IRON GRATE OR CAST STEEL GRATE

GRATE BAR SPACING TABLE

TYPE	NO. OF BARS	CLEAR BAR SPACING	X	Y	
				102mm (4") SPACING	152mm (6") SPACING
Welded Steel	15	51mm (2")	14.2mm (9/16")	95mm (3-3/4")	146mm (5-3/4")
Cast	13	51mm (2")	54mm (2-1/8")	95mm (3-3/4")	146mm (5-3/4")

Revision	By	Approved	Date
ORIGINAL		Kercheval	12/75
Add Metric		T. Stanton	03/03
Reformatted		T. Stanton	04/06

SAN DIEGO REGIONAL STANDARD DRAWING

CORRUGATED STEEL PIPE INLETS, DETAILS

RECOMMENDED BY THE SAN DIEGO REGIONAL STANDARDS COMMITTEE

3/01/2003

Chairperson R.C.E. 19246 Date

DRAWING NUMBER **D-17A**

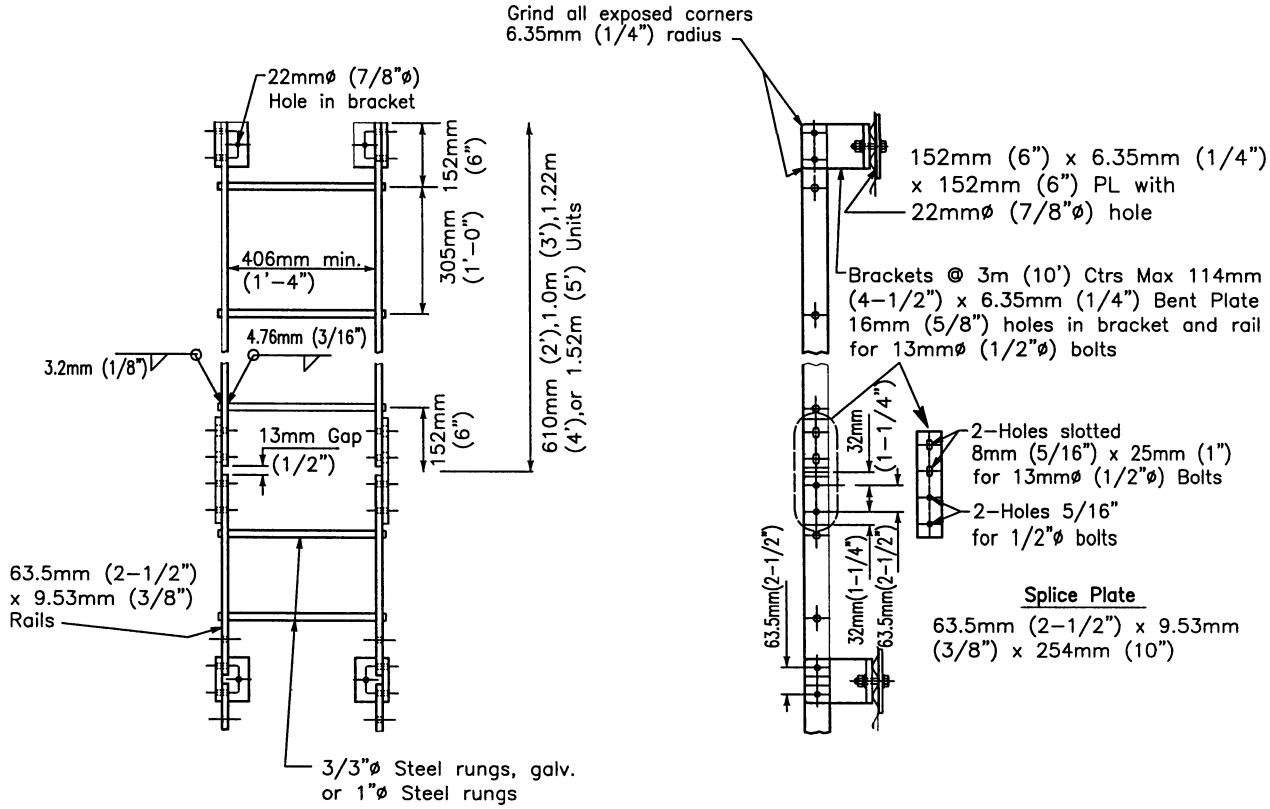

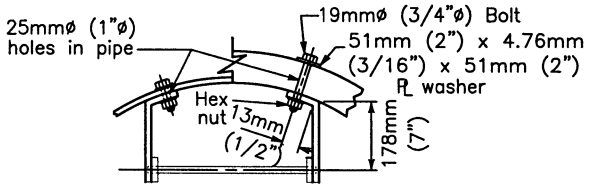

LADDER DETAIL

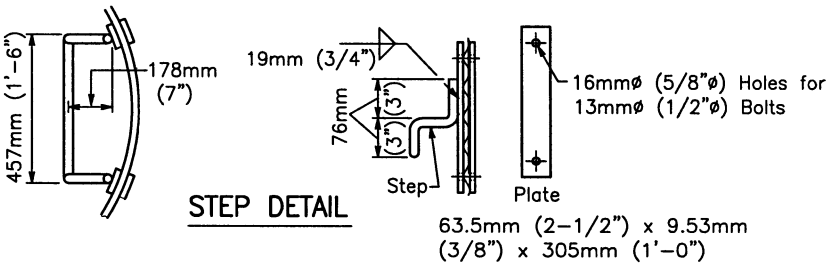

STEP DETAIL

Revision	By	Approved	Date
ORIGINAL		Kercheval	12/75
Add Metric		T. Stanton	03/03
Reformatted		T. Stanton	04/06

SAN DIEGO REGIONAL STANDARD DRAWING

CORRUGATED STEEL PIPE INLETS, DETAILS

RECOMMENDED BY THE SAN DIEGO REGIONAL STANDARDS COMMITTEE

T. Stanton 3/01/2003

Chairperson R.C.E. 19246 Date

DRAWING NUMBER **D-17B**

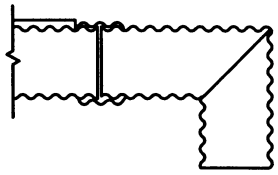

ELBOW

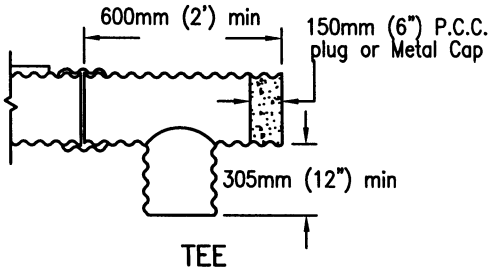

TEE

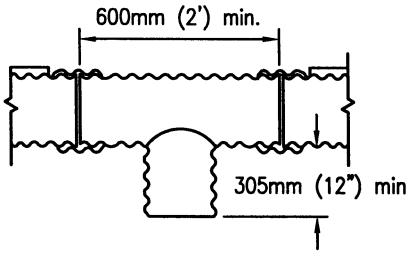

TEE–SAG CONDITION

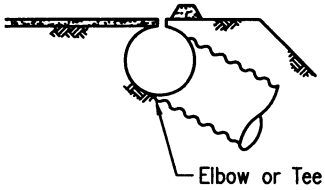

OVERSIDE DRAIN

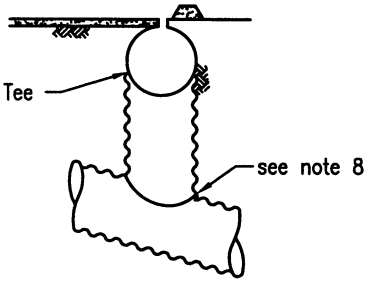

RISER

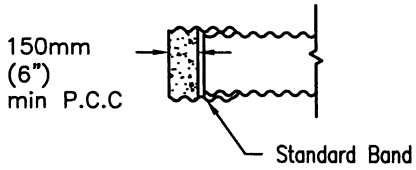

BAND PLUG

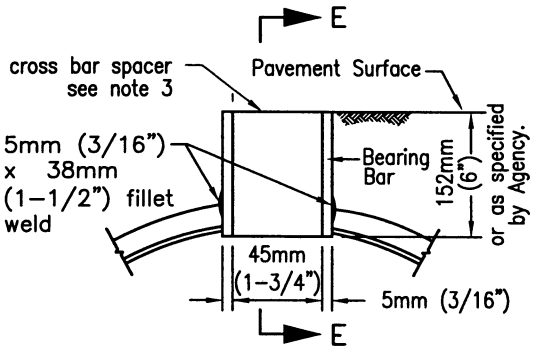

SECTION D–D
GRATE SLOT DETAIL

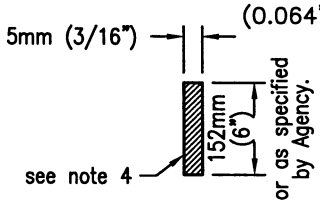

SECTION E–E

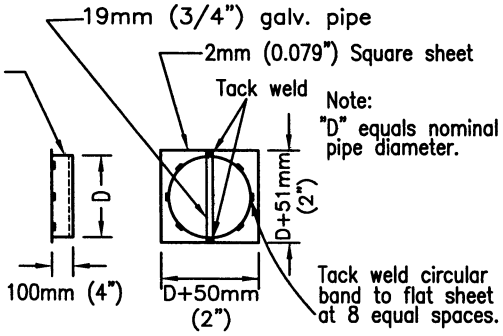

METAL CAP DETAIL

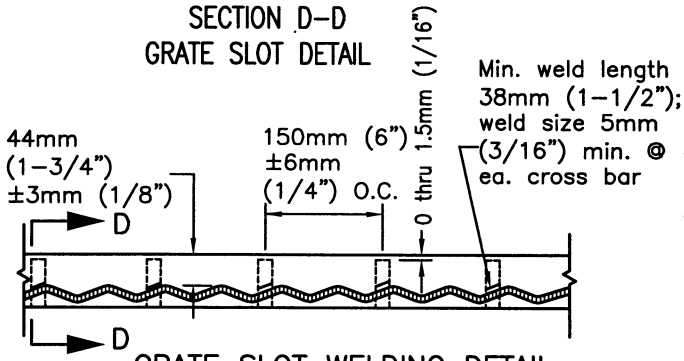

GRATE SLOT WELDING DETAIL

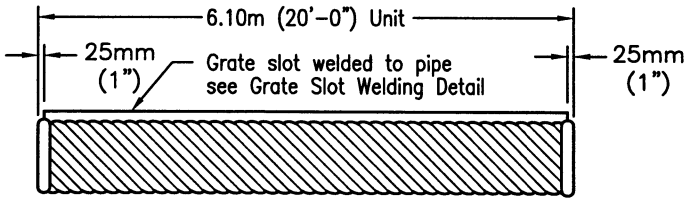

GRATE SLOT DRAIN

NOTES

1. Drain seams may be constructed by riveting or resistance spot–welding, continuous helical lock seam or helical welding seam at equal centers.
2. Each drain section shall be assembled with standard coupling bands.
3. Cross bar spacer of grate shall be pressure fused or plug welded to bearing bars in such a manner as to develop the strength of the cross bar spacer.
4. Cross bar spacer (Section E–E) may differ from that shown provided section area is equal or greater.
5. Grate material shall be a weldable grade of steel complying to the requirements of ASTM A 36.
6. The maximum variance from a straight line from the extreme top corners of the bearing bar shall be 13mm (1/2") in 6.1m (20').
7. Installation lengths shall be 3m (10') or multiples thereof.
8. Either field joint sealed with a pliable mixture of sand, portland cement and emulsified asphalt (Mixture of 1 part portland cement, 3 – 5 parts sand and 1–1/2 parts SSI emulsified asphalt), or continuous weld.

Revision	By	Approved	Date
ORIGINAL		Kercheval	12/75
Add Metric		T. Stanton	03/03
Reformatted		T. Stanton	04/06

SAN DIEGO REGIONAL STANDARD DRAWING

SLOTTED CORRUGATED STEEL

PIPE DRAINS 300mm (12") THROUGH 600mm (24")

RECOMMENDED BY THE SAN DIEGO REGIONAL STANDARDS COMMITTEE

T. Stanton 3/10/2003

Chairperson R.C.E. 19246 Date

DRAWING NUMBER **D-18**

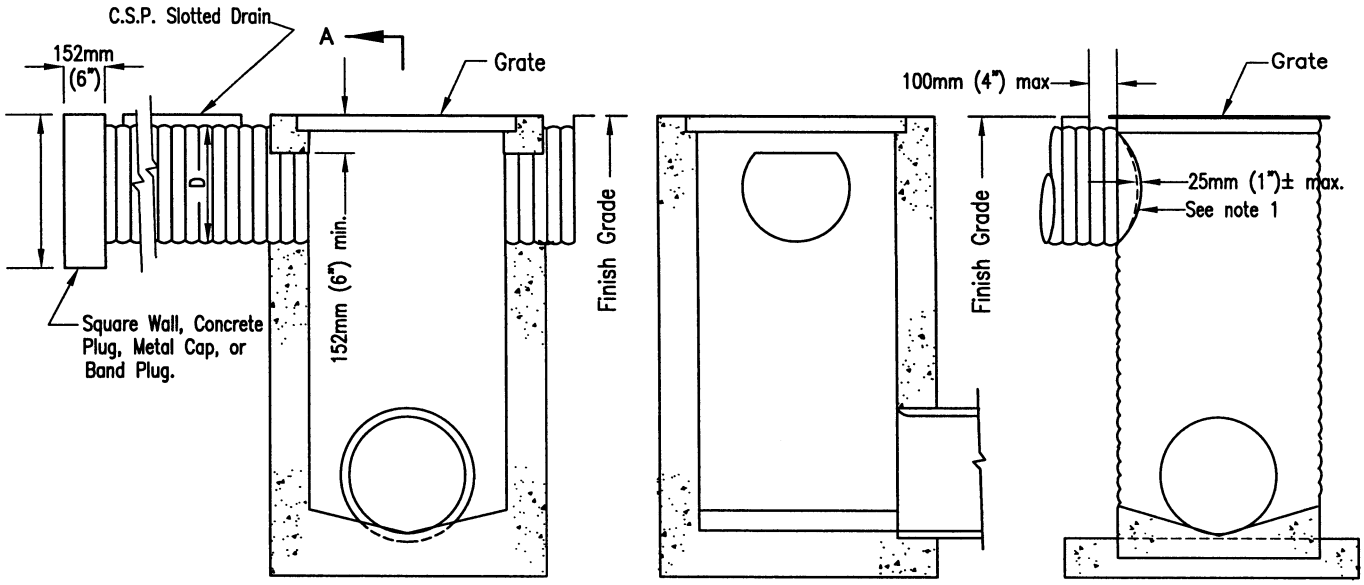

A

SECTION A–A

C.S.P. INLET

CATCH BASIN

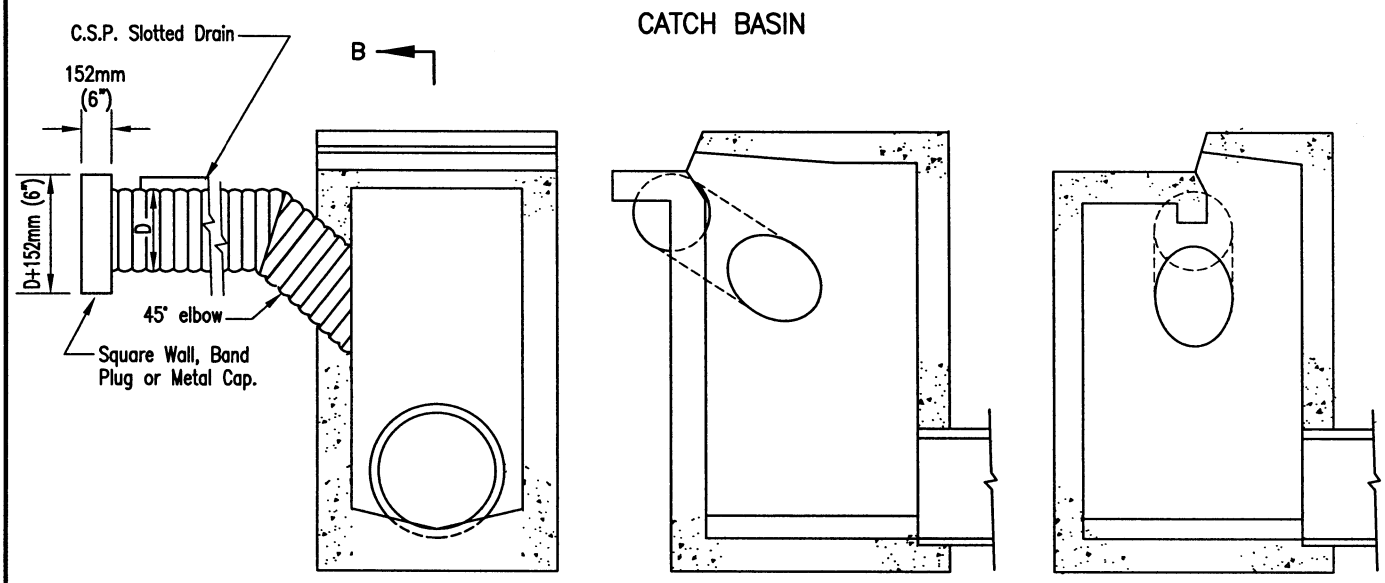

B

SECTION B–B

ALTERNATE SECTION B–B

INLETS

NOTES

1. Either field joint with a pliable mixture of sand, portland cement emulsified asphalt (mixture of 1 part portland cement, 3–5 parts sand, and 1–1/2 parts SSI emulsified asphalt), or continuous weld.

2. See Standard Drawing D–18 for additional notes and details.

Revision	By	Approved	Date
ORIGINAL		Kercheval	12/75
Add Metric		T. Stanton	03/03
Reformatted		T. Stanton	04/06

SAN DIEGO REGIONAL STANDARD DRAWING

SLOTTED DRAIN CONNECTIONS TO STANDARD INLETS

RECOMMENDED BY THE SAN DIEGO REGIONAL STANDARDS COMMITTEE

T. A. Stanton 3/10/2003

Chairperson R.C.E. 19246 Date

DRAWING NUMBER **D-19**

SEE SDD-100

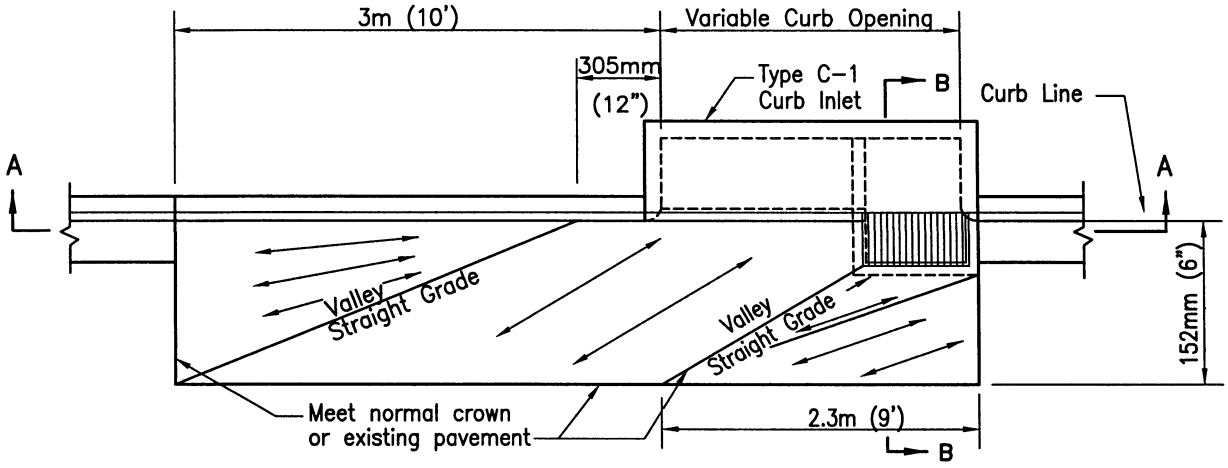

PLAN

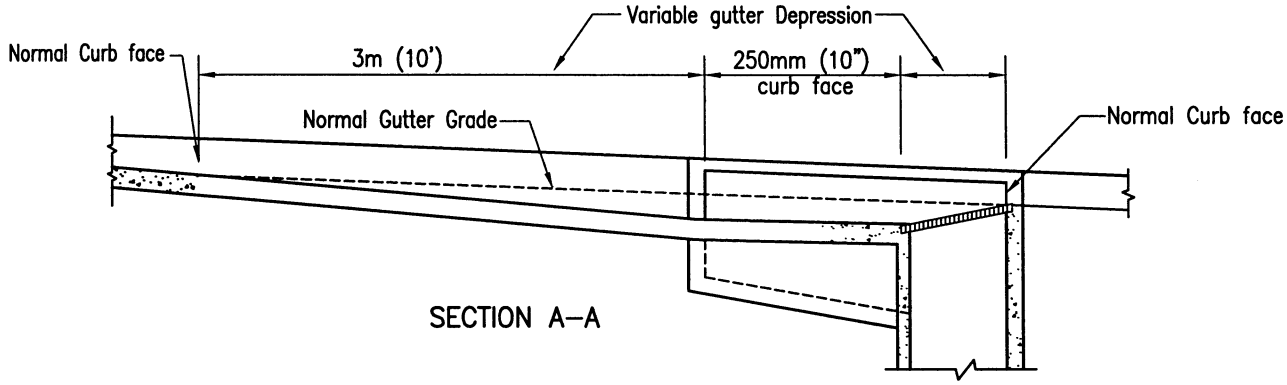

SECTION A–A

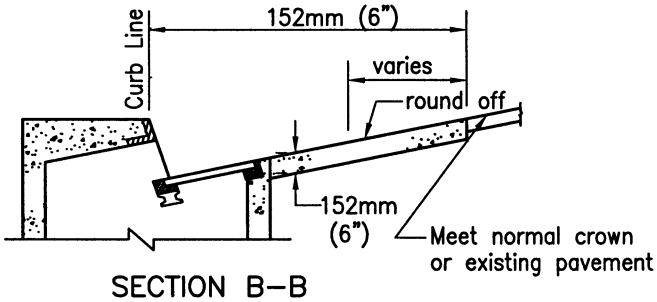

SECTION B–B

NOTES

1. Curb and apron to be placed monolithically.
2. Use of false header at valleys and slope break line is optional.
3. Extend vertical steel from inlet structure into concrete apron as required.
4. Screed Direction ←——→
5. Concrete shall be 308kg/M³-C-17 Mpa (520-C-2500)

LEGEND ON PLANS

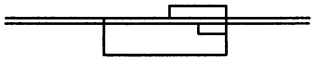

Revision	By	Approved	Date
ORIGINAL		Kercheval	12/75
Add Metric		T. Stanton	03/03
Reformatted		T. Stanton	04/06

SAN DIEGO REGIONAL STANDARD DRAWING

CONCRETE APRON FOR CURB INLET

RECOMMENDED BY THE SAN DIEGO REGIONAL STANDARDS COMMITTEE

T. Stanton 3/01/2003

Chairperson R.C.E. 19246 Date

DRAWING NUMBER **D-20**

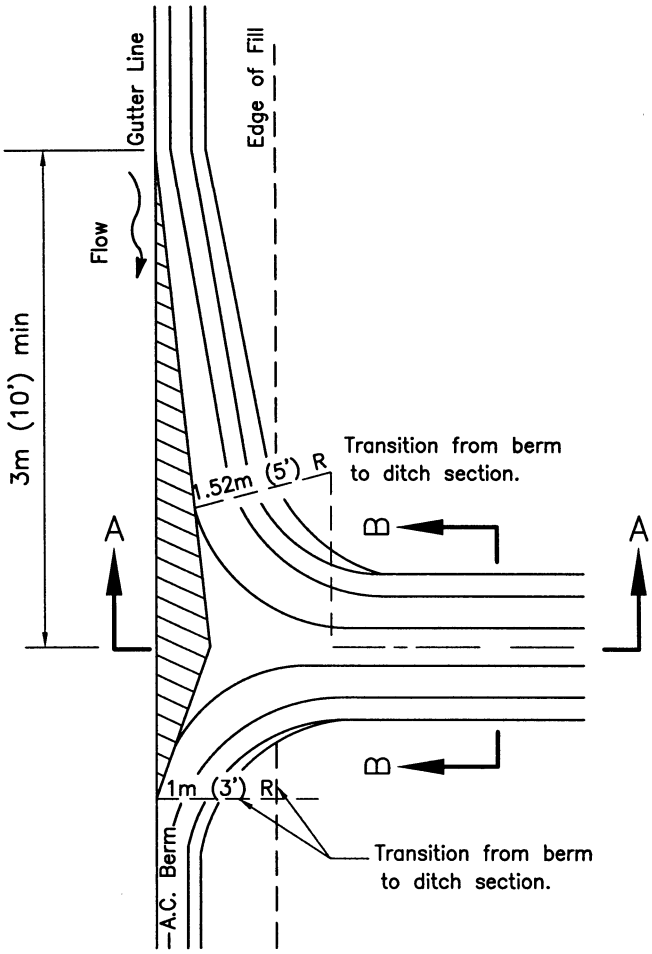

PLAN

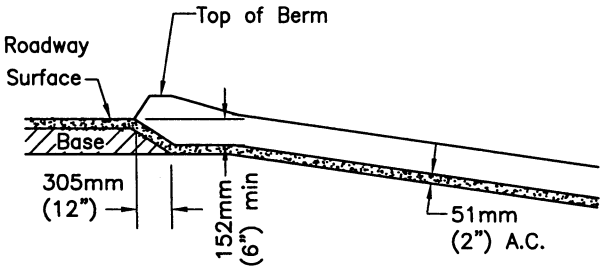

SECTION A–A

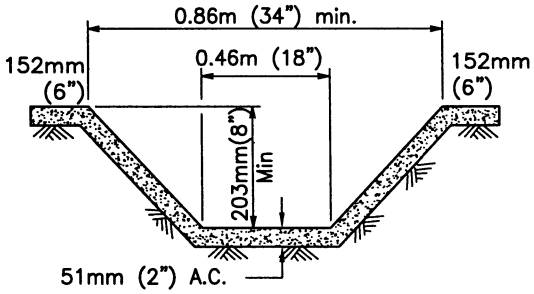

NOTE

1. Cross sectional area of ditch may be round or trapezoidal.

SECTION B–B

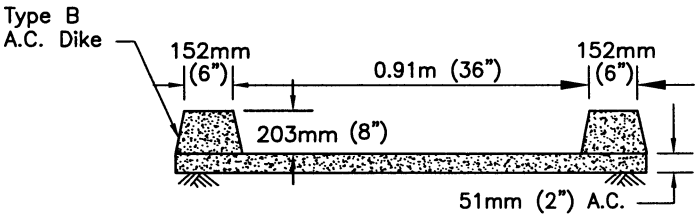

ALTERNATE SECTION B–B

NOTE

1. A.C. spillway may be used when fill is 3m (10') or less, and where fill slope 1–1/2:1 or flatter.
2. Use 3m (10') min. length of gutter transition on each side of downdrain in sag condition.
3. A round sectional area of equal flow capacity may be used.

LEGEND ON PLANS

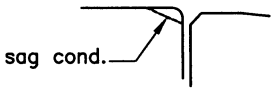

Revision	By	Approved	Date
ORIGINAL		Kercheval	12/75
Add Metric		T. Stanton	03/03
Reformatted		T. Stanton	04/06

SAN DIEGO REGIONAL STANDARD DRAWING

ASPHALT CONCRETE SPILLWAY

RECOMMENDED BY THE SAN DIEGO REGIONAL STANDARDS COMMITTEE

3/01/2003

Chairperson R.C.E. 19246 Date

DRAWING NUMBER D-22

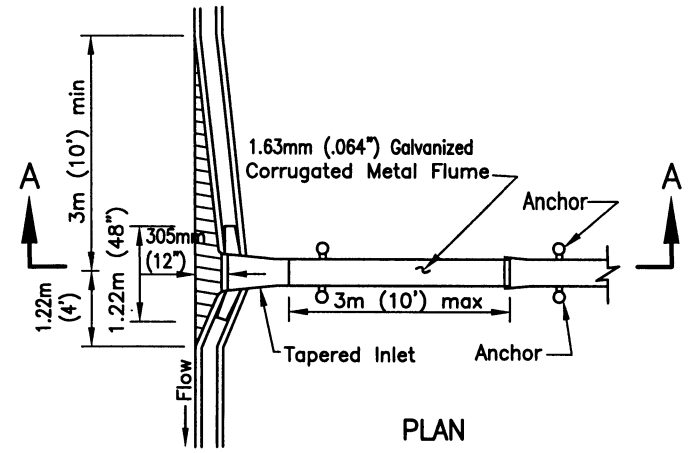

PLAN

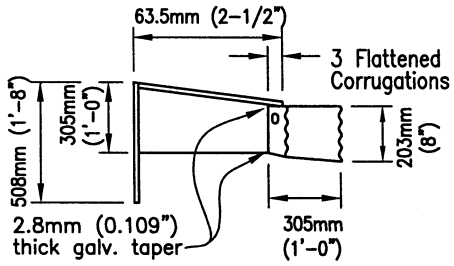

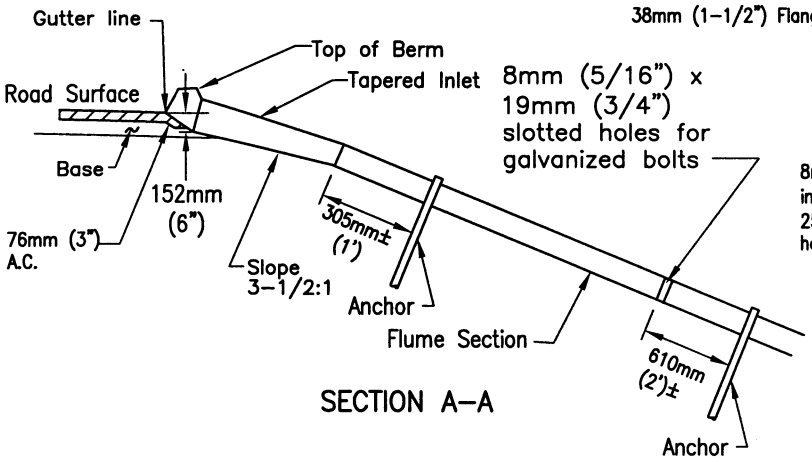

SECTION A–A

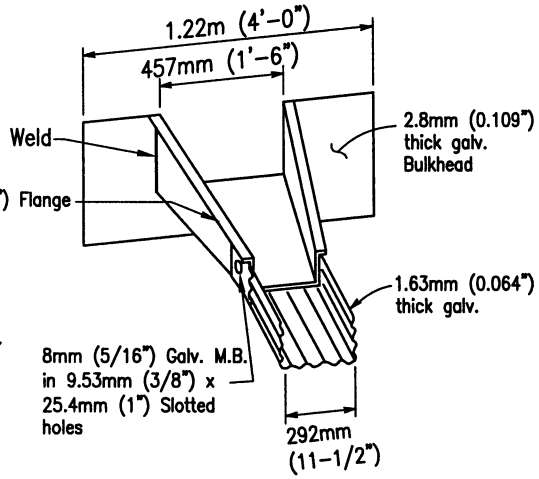

TAPERED INLET

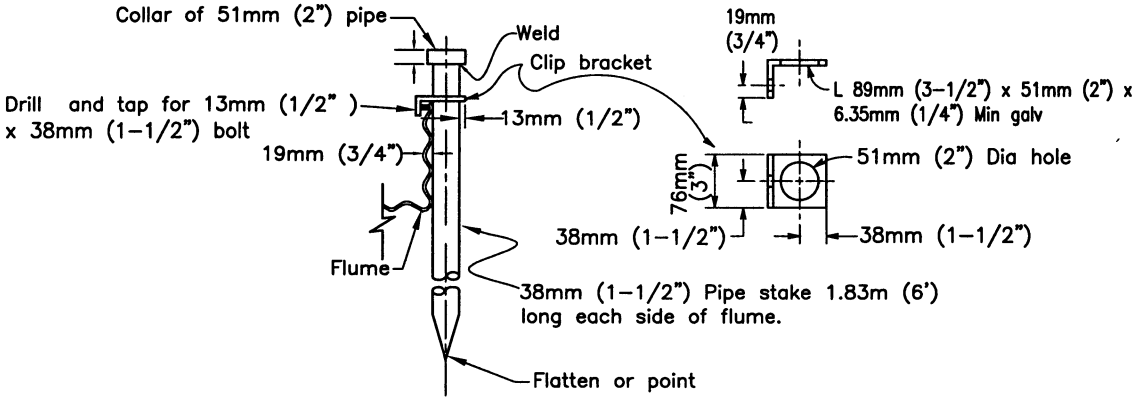

ANCHOR–DETAIL

NOTES

1. Downdrain flume may be used where fill slope is 1 1/2:1 or flatter.
2. Use 3m (10') min. length of gutter transition on each side of downdrain in sag condition.
3. All metal parts to be galvanized after fabrication.

LEGEND ON PLANS

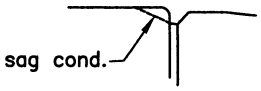

Revision	By	Approved	Date
ORIGINAL		Kercheval	12/75
Add Metric		T. Stanton	03/03
Reformatted		T. Stanton	04/06

SAN DIEGO REGIONAL STANDARD DRAWING

TAPERED INLET AND DOWNDRAIN FLUME

RECOMMENDED BY THE SAN DIEGO REGIONAL STANDARDS COMMITTEE

T. Stanton 3/01/2003

Chairperson R.C.E. 19246 Date

DRAWING NUMBER **D-23**

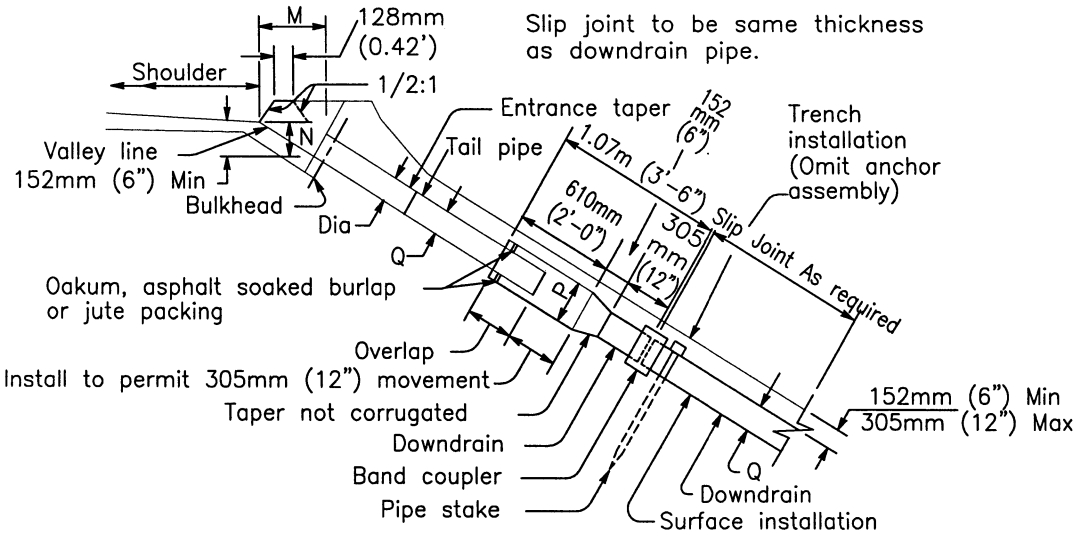

SECTION A–A

CMP dimensions as tabulated below

P	254mm (10")	381mm (15")	457mm (18")	533mm (21")	686mm (27")
Q	203mm (8")	305mm (12")	381mm (15")	457mm (18")	610mm (24")

DIAMETER	MINIMUM L	M	N
203mm (8")	3.0 m (10')	457mm (18")	203mm (8")
305mm (12")	4.57m (15')	508mm (20")	305mm (12")
381mm (15")	7.62m (25')	610mm (24")	381mm (15")
457mm (18")	9.14m (30')	762mm (30")	406mm (16")
610mm (24")	12.2m (40')	914mm (36")	457mm (18")

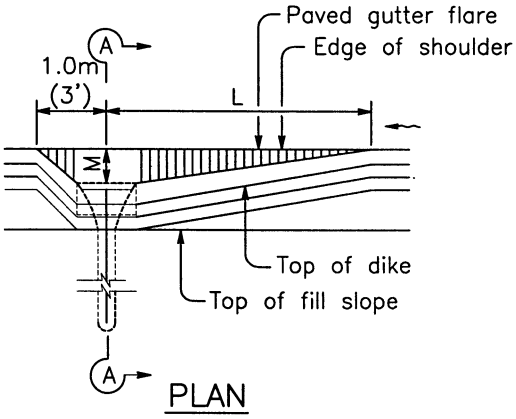

PLAN

NOTES

1. Cable, slip joint or anchor assembly to be placed when specified.
2. Slip joint to be omitted when completely buried.

Revision	By	Approved	Date
ORIGINAL		Kercheval	12/75
Add Metric		T.Stanton	03/03
Reformatted		T.Stanton	04/06

SAN DIEGO REGIONAL STANDARD DRAWING

ENTRANCE TAPER AND DOWNDRAIN PIPE

RECOMMENDED BY THE SAN DIEGO REGIONAL STANDARDS COMMITTEE

T.Stanton 3/10/2003

Chairperson R.C.E. 19246 Date

DRAWING NUMBER **D-24A**

Slip joint to be same thickness
as downdrain pipe.

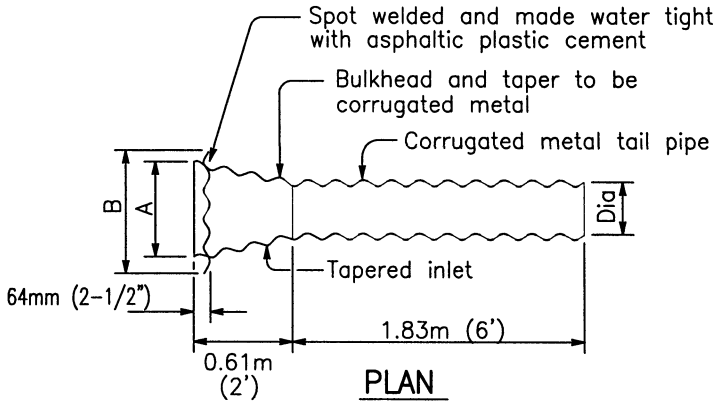

PLAN

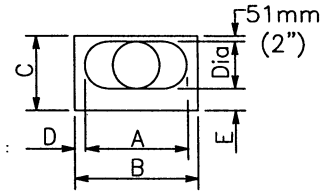

END VIEW

Bulkhead and taper of same thickness as tail pipe with 0.079" max.
Tail pipe of same thickness as downdrain pipe.

ENTRANCE TAPER
ALTERNATIVE A

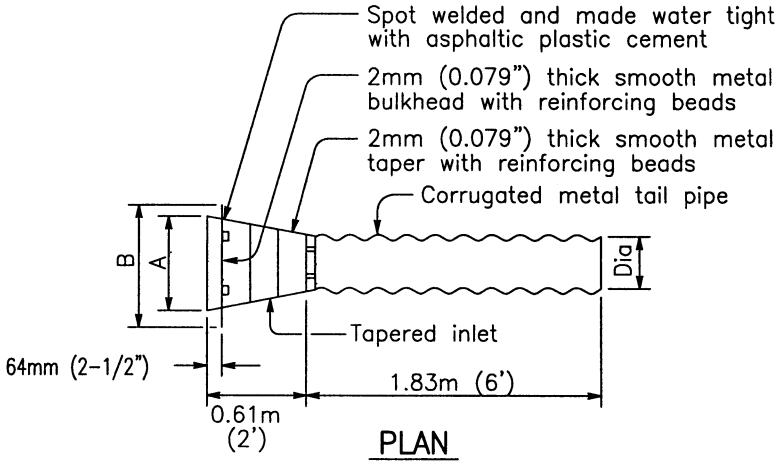

PLAN

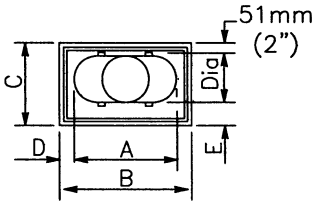

END VIEW

Tail pipe of same thickness as downdrain pipe.

ENTRANCE TAPER
ALTERNATIVE B

Revision	By	Approved	Date
ORIGINAL		Kercheval	12/75
Add Metric		T.Stanton	03/03
Reformatted		T.Stanton	04/06

SAN DIEGO REGIONAL STANDARD DRAWING

ENTRANCE TAPER AND DOWNDRAIN PIPE

RECOMMENDED BY THE SAN DIEGO REGIONAL STANDARDS COMMITTEE

T.Stanton 3/10/2003

Chairperson R.C.E. 19246 Date

DRAWING NUMBER **D-24B**

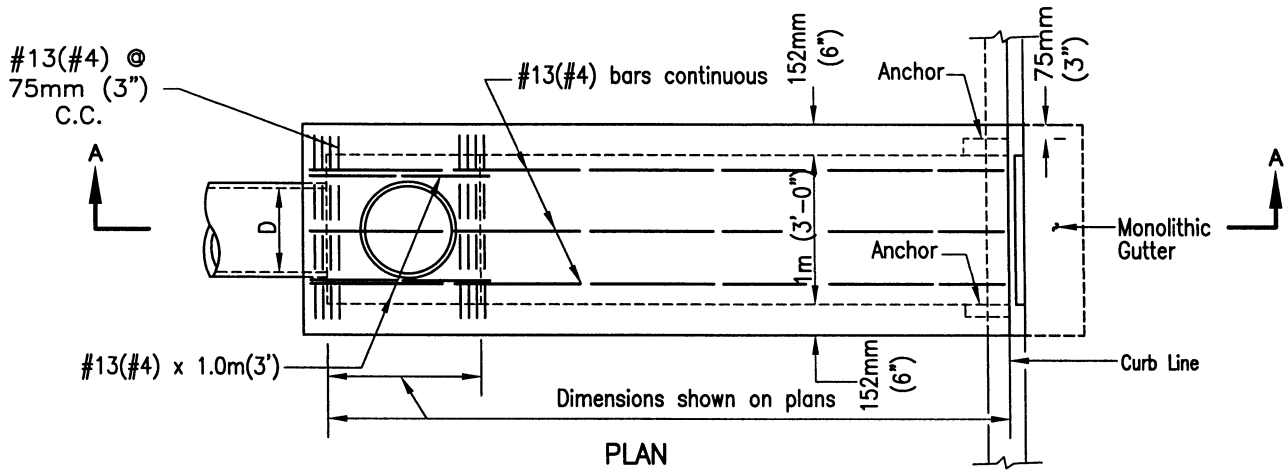

PLAN

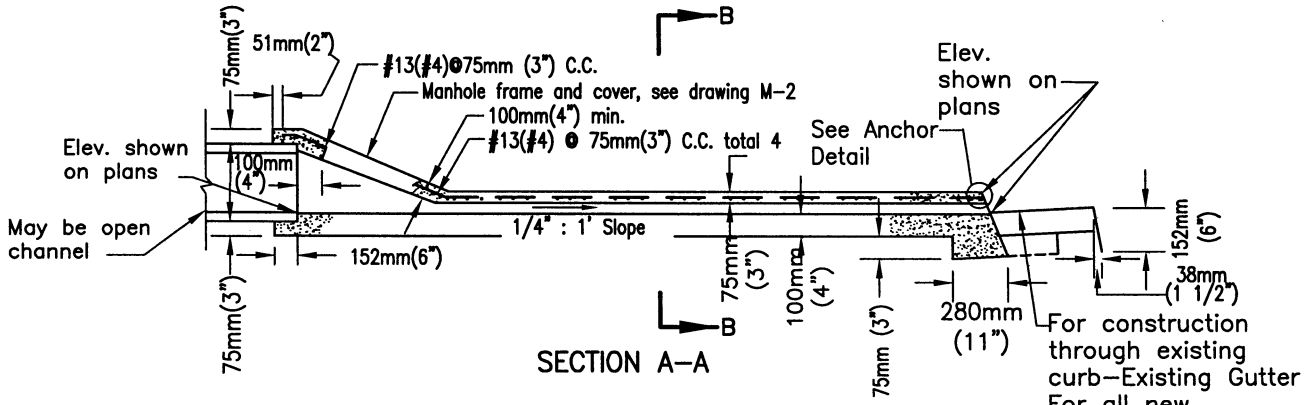

SECTION A–A

For construction through existing curb–Existing Gutter
For all new construction–Monolithic Gutter.

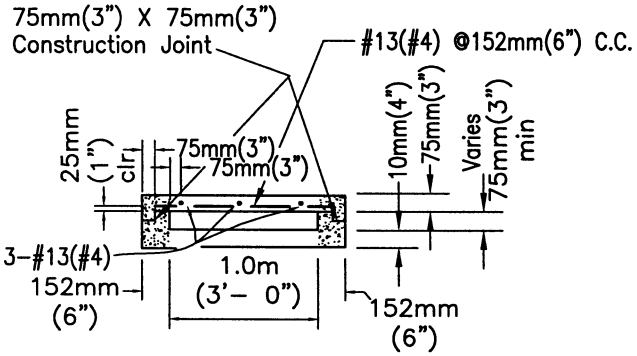

SECTION B–B

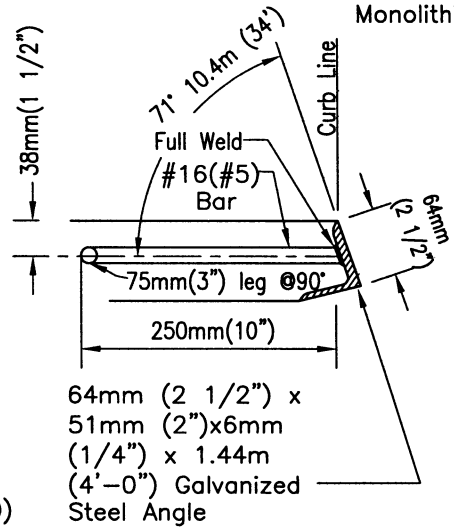

ANCHOR DETAIL

LEGEND ON PLANS

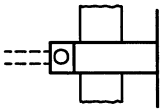

NOTES

1. Concrete shall be 332 kg/M³ –C–22Mpa (560–C–3250)
2. D=inside diameter of pipe or depth of channel.
3. Section to be sloped laterally with top conforming to the grades of the existing sidewalk and curb.
4. Manhole frame and cover may be deleted with open channel.
5. Trowel finish top surface and reproduce markings of existing sidewalk and curb.
6. Trowel finish floor of outlet.

Revision	By	Approved	Date
ORIGINAL		Kercheval	12/75
Add Metric		T.Stanton	03/03
Reformatted		T.Stanton	04/06

SAN DIEGO REGIONAL STANDARD DRAWING

CURB OUTLET - TYPE A

RECOMMENDED BY THE SAN DIEGO REGIONAL STANDARDS COMMITTEE

T.Stanton 3/01/2003

Chairperson R.C.E. 19246 Date

DRAWING NUMBER **D-25**

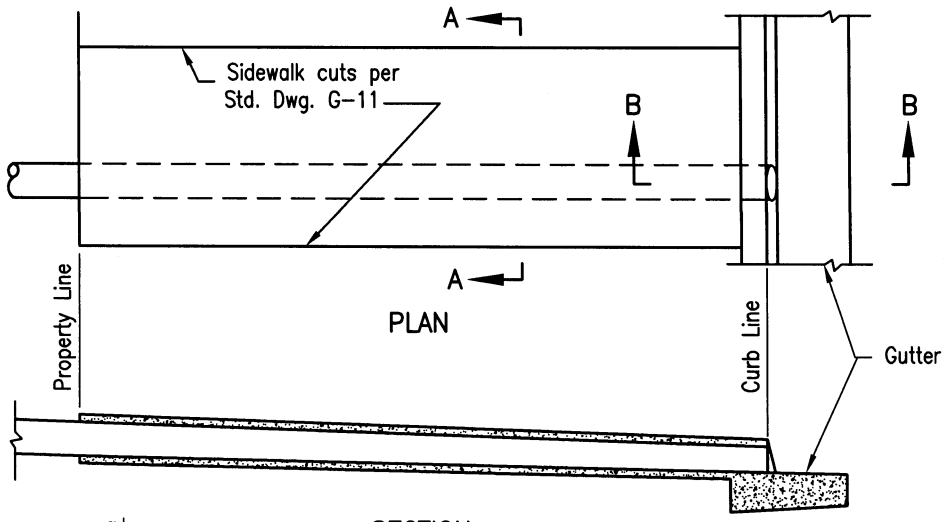

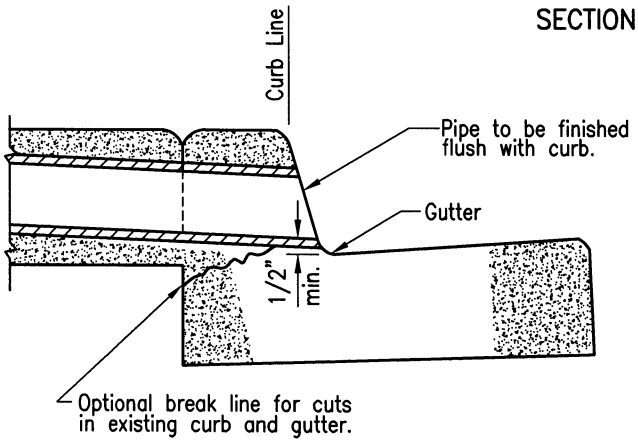

SECTION B–B

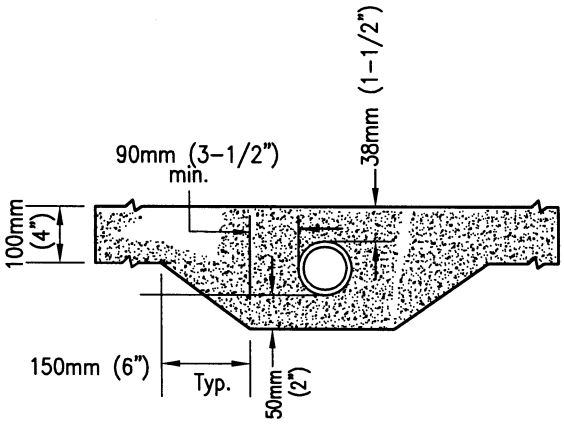

SECTION A–A

APPROVED DRAIN PIPE SIZES	
PIPE SIZE	CURB HEIGHT
75mm (3")	150mm (6") to 200mm (8") CURB FACE
100mm (4")	200mm (8") CURB FACE
150mm (6")	250mm (10") CURB FACE

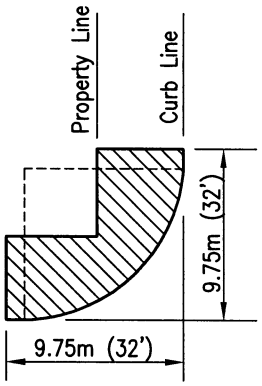

Drain shall not occupy
the hatched area

BLOCK CORNER

NOTES

1. Pipe shall be one continuous length from property line to curb line.
2. Multiple pipes to be set a minimum distance of D/2 apart.
3. Concrete shall be 308kg/M^3–C–17 Mpa (520–C–2500)
4. Pipe shall be circular rigid plastic, or approved equal.
5. Coring of existing curb may be used as an alternative.

Revision	By	Approved	Date
ORIGINAL		Kercheval	12/75
Add Metric		T.Stanton	03/03
Reformatted		T.Stanton	04/06

SAN DIEGO REGIONAL STANDARD DRAWING

SIDEWALK UNDERDRAIN PIPE

RECOMMENDED BY THE SAN DIEGO
REGIONAL STANDARDS COMMITTEE

T.A. Stanton 3/01/2003

Chairperson R.C.E. 19246 Date

DRAWING NUMBER **D-27**

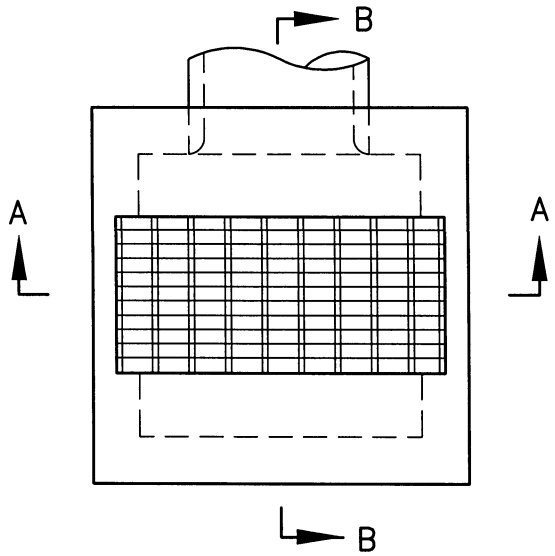

PLAN

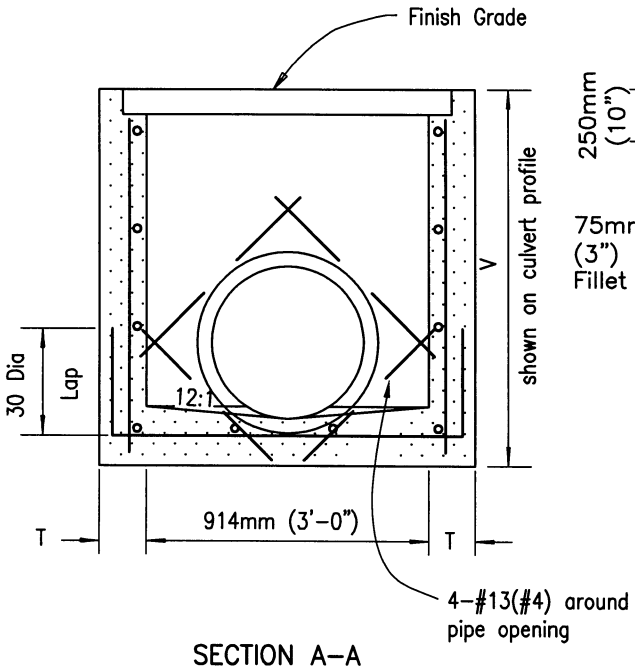

SECTION A–A

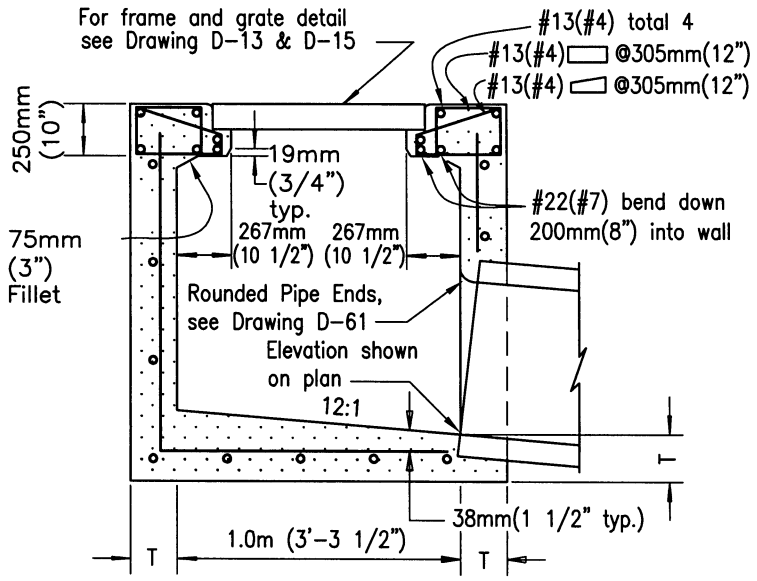

SECTION B–B

NOTES

1. See Standard Drawing D-11 for additional notes and details.
2. When V exceeds 1.2m (4'), steps shall be installed

LEGEND ON PLANS

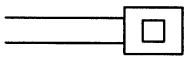

Revision	By	Approved	Date
ORIGINAL		Solomon	7/79
Add Metric		T. Stanton	03/03
Reformatted		T. Stanton	04/06

SAN DIEGO REGIONAL STANDARD DRAWING

CATCH BASIN - TYPE I

RECOMMENDED BY THE SAN DIEGO REGIONAL STANDARDS COMMITTEE

T. Stanton 3/01/2003

Chairperson R.C.E. 19246 Date

DRAWING NUMBER **D-29**

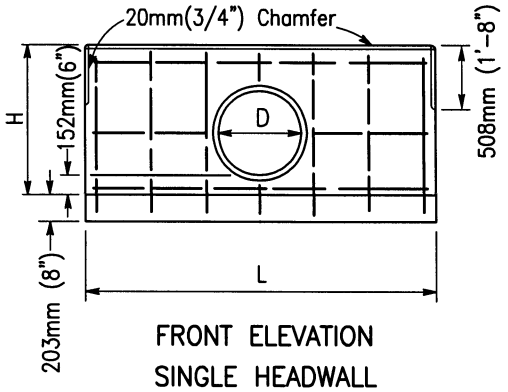

FRONT ELEVATION
SINGLE HEADWALL

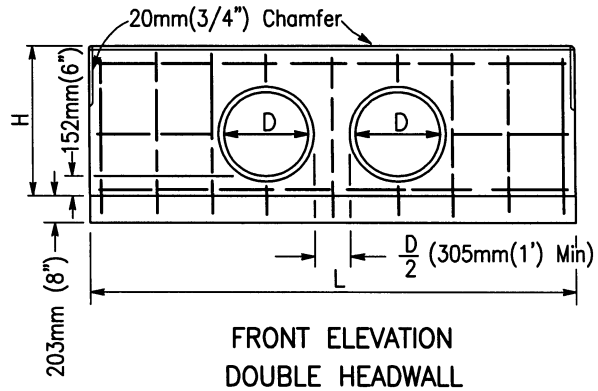

FRONT ELEVATION
DOUBLE HEADWALL

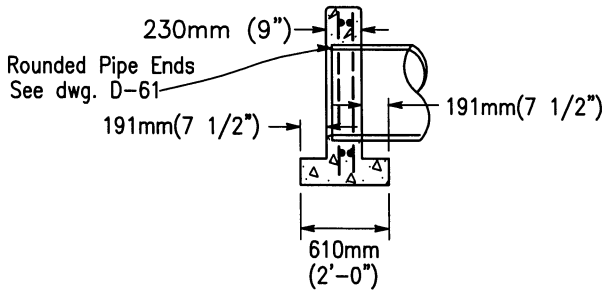

SECTION, SINGLE &
DOUBLE HEADWALLS

D	H	SINGLE						DOUBLE					
		L	Steel kg	Lbs.	Concrete cu m	C.Y.		L	Steel kg	Lbs.	Concrete cu m	C.Y.	
300mm(12")	813mm(2'-8")	1.52m	(5'-0")	15.9	(35)	0.46	(0.60)	2.44m	(8'-0")	22.7	(50)	0.72	(0.94)
375mm(15")	889mm(2'-11")	1.83m	(6'-0")	18.1	(40)	0.57	(0.75)	2.90m	(9'-6")	27.2	(60)	0.89	(1.17)
450mm(18")	965mm(3'-2")	2.13m	(7'-0")	22.7	(50)	0.70	(0.91)	3.20m	(10'-6")	34.0	(75)	1.03	(1.35)
525mm(21")	1.04m (3'-5")	2.29m	(7'-6")	27.2	(60)	0.78	(1.02)	3.51m	(11'-6")	40.8	(90)	1.16	(1.52)
600mm(24")	1.12m (3'-8")	2.59m	(8'-6")	34.0	(75)	0.92	(1.20)	3.81m	(12'-6")	45.4	(100)	1.32	(1.72)
675mm(27")	1.19m (3'-11")	2.90m	(9'-6")	38.6	(85)	1.06	(1.39)	4.27m	(14'-0")	52.2	(115)	1.53	(2.00)
750mm(30")	1.27m (4'-2")	3.05m	(10'-0")	38.6	(85)	1.16	(1.52)	4.57m	(15'-0")	57.2	(126)	1.69	(2.21)
825mm(33")	1.35m (4'-5")	3.35m	(11'-0")	45.4	(100)	1.32	(1.73)	4.88m	(16'-0")	59.0	(130)	1.85	(2.42)
900mm(36")	1.42m (4'-8")	3.65m	(12'-0")	47.6	(105)	1.49	(1.95)	5.18m	(17'-0")	65.8	(145)	2.03	(2.65)
975mm(39")	1.50m (4'-11")	3.81m	(12'-6")	59.0	(130)	1.60	(2.09)	5.49m	(18'-0")	77.1	(170)	2.20	(2.88)
1050mm (42")	1.57m (5'-2")	4.11m	(13'-6")	63.5	(140)	1.79	(2.34)	5.79m	(19'-0")	84.0	(185)	2.39	(3.13)
1150mm (45")	1.65m (5'-5")	4.42m	(14'-6")	68.0	(150)	1.99	(2.60)	6.10m	(20'-0")	88.5	(195)	2.58	(3.38)
1225mm (48")	1.73m (5'-8")	4.57m	(15'-0")	72.6	(160)	2.10	(2.75)	6.40m	(21'-0")	90.7	(200)	2.78	(3.64)
1300mm (51")	1.80m (5'-11")	4.88m	(16'-0")	81.6	(180)	2.32	(3.03)	6.86m	(22'-6")	102	(225)	3.07	(4.02)
1375mm (54")	1.88m (6'-2")	5.18m	(17'-0")	86.2	(190)	2.53	(3.31)	7.16m	(23'-6")	109	(240)	3.29	(4.30)

NOTES

1. Concrete shall be 332 kg/M^3 -C-22Mpa (560-C-3250)
2. All reinforcing shall be #13(#4) bars. All vertical and horizontal tie bars @ 457mm(18") maximum spacing.

LEGEND ON PLANS

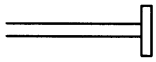

Revision	By	Approved	Date
ORIGINAL		Kercheval	12/75
Add Metric		T. Stanton	03/03
Reformatted		T. Stanton	04/06

SAN DIEGO REGIONAL STANDARD DRAWING

STRAIGHT HEADWALL - TYPE A (CIRCULAR PIPE)

RECOMMENDED BY THE SAN DIEGO REGIONAL STANDARDS COMMITTEE

T. Stanton 3/01/2003

Chairperson R.C.E. 19246 Date

DRAWING NUMBER **D-30**

Revision	By	Approved	Date
ORIGINAL		Kercheval	12/75
Add Metric		T. Stanton	03/03
Reformatted	T. Stanton		04/06

SAN DIEGO REGIONAL STANDARD DRAWING

STRAIGHT HEADWALL - TYPE A

(C.S.P. -ARCH)

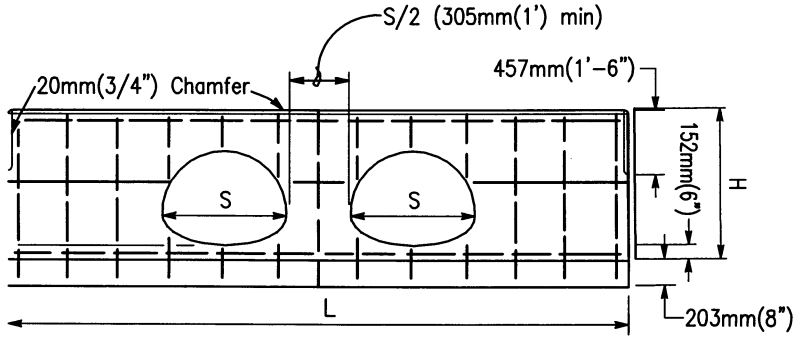

ELEVATION – DOUBLE HEADWALL

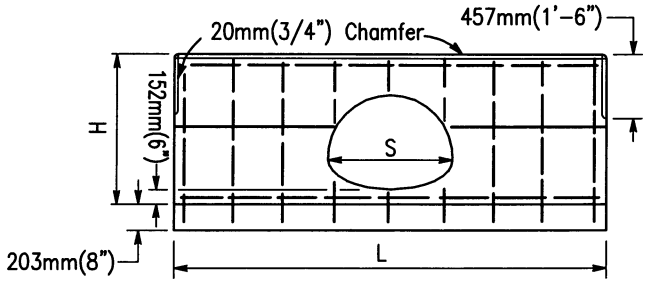

ELEVATION – SINGLE HEADWALL

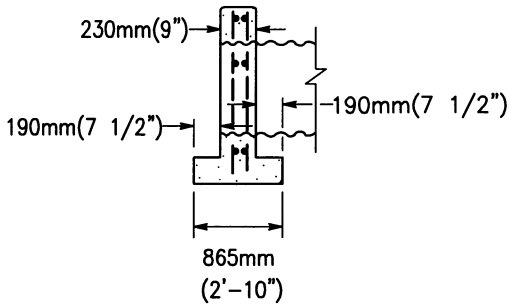

SECTION, SINGLE & DOUBLE HEADWALLS

C.S.P. ARCH SIZE	SINGLE						DOUBLE				
	H		L		Steel	Concrete	L		Steel		Concrete	
Metric (inches)	Metric	(ft/in)	Metric	(ft/in)		cu m C.Y.	Metric	(ft/in)	kg	Lbs.	cu m	C.Y.
450mmx275mm (18x11)	787mm	(2-7)	1.68m	(5-6)	16.8	(37)	.490	(0.64)	2.44m	(8'-0")	23.6	(52)	.700	(0.91)
525mmx375mm (21x15)	889mm	(2-11)	1.98m	(6-6)	20.4	(45)	.612	(0.80)	3.05m	(10'-0")	27.2	(60)	.940	(1.22)
600mmx450mm (24x18)	965mm	(3-2)	2.29m	(7-6)	22.7	(50)	.734	(0.96)	3.51m	(11'-6")	31.8	(70)	1.11	(1.45)
700mmx500mm (28x20)	1.02m	(3-4)	2.59m	(8-6)	27.3	(60)	.860	(1.12)	4.12m	(13'-6")	40.9	(90)	1.35	(1.76)
875mmx600mm (35x24)	1.12m	(3-8)	3.20m	(10-6)	38.6	(85)	1.13	(1.47)	4.72m	(15'-6")	54.5	(120)	1.66	(2.16)
1050mmx725mm (42x29)	1.24m	(4-1)	3.81m	(12-6)	50.0	(110)	1.34	(1.76)	5.49m	(18'-0")	65.8	(145)	1.97	(2.57)
1225mmx825mm (49x33)	1.35m	(4-5)	4.42m	(14-6)	59.0	(130)	1.73	(2.26)	6.40m	(21'-0")	77.2	(170)	2.40	(3.13)
1425mmx950mm (57x38)	1.47m	(4-10)	5.18m	(17-0)	70.4	(155)	2.15	(2.81)	7.47m	(24'-6")	95.3	(210)	2.96	(3.86)
1550mmx1050mm (64x43)	1.60m	(5-3)	5.79m	(19-0)	79.4	(175)	2.54	(3.31)	8.23m	(27'-0")	104.4	(230)	3.38	(4.42)
1775mmx1175mm (71x47)	1.70m	(5-7)	6.40m	(21-0)	88.5	(195)	2.92	(3.81)	9.14m	(30'-0")	115.7	(255)	3.90	(5.09)

RECOMMENDED BY THE SAN DIEGO REGIONAL STANDARDS COMMITTEE

Chairperson R.C.E. 19246 Date 3/01/2003

DRAWING NUMBER D-31

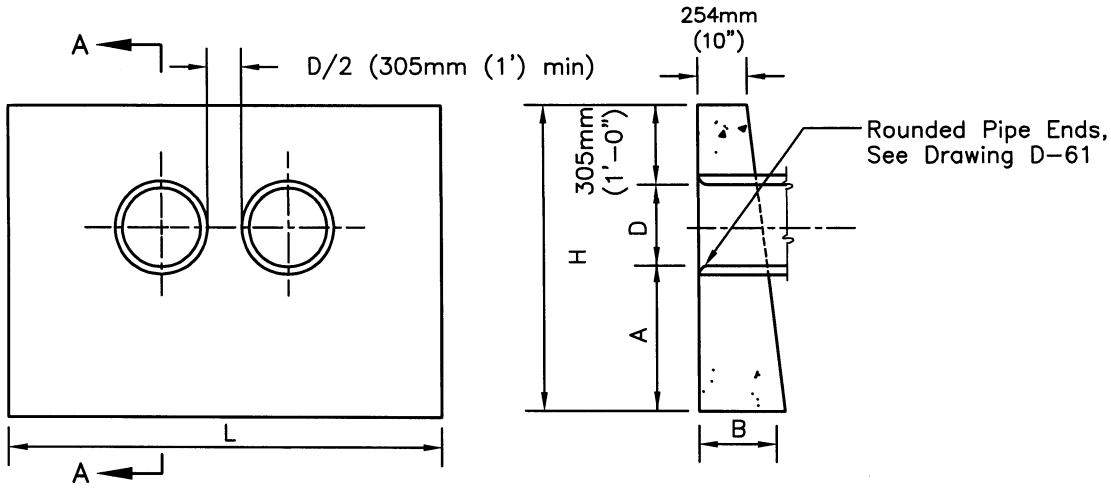

DOUBLE PIPE ELEVATION

SECTION A–A

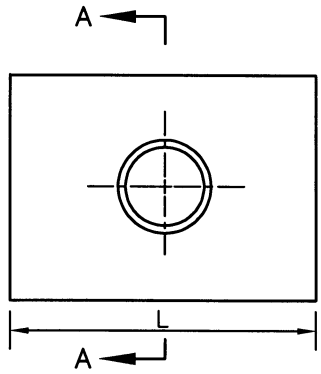

SINGLE PIPE ELEVATION

D		A		B		H		SINGLE				DOUBLE			
								L		Concrete		L		Concrete	
mm	in.	mm	ft./in.	mm	ft./in.	m	ft./in.	m	ft./in.	kg	C.Y.	m	ft./in.	kg	C.Y.
300	(12")	610	(2'-0")	305	(1'-0")	1.22	(4'-0")	1.22	(4'-0")	.345	(0.45)	1.73	(5'-8")	.475	(.62)
375	(15")	610	(2'-0")	330	(1'-1")	1.30	(4'-3")	1.52	(5'-0")	.482	(0.63)	2.16	(7'-1")	.650	(.85)
450	(18")	610	(2'-0")	356	(1'-2")	1.40	(4'-6")	1.83	(6'-0")	.635	(0.83)	2.59	(8'-6")	.860	(1.12)
600	(24")	762	(2'-6")	432	(1'-5")	1.68	(5'-6")	2.44	(8'-0")	1.18	(1.54)	3.45	(11'-4")	1.60	(2.09)
750	(30")	762	(2'-6")	533	(1'-9")	1.83	(6'-0")	3.05	(10'-0")	1.85	(2.41)	4.32	(14'-2")	2.50	(3.26)
900	(36")	914	(3'-0")	610	(2'-0")	2.13	(7'-0")	3.66	(12'-0")	2.86	(3.74)	5.18	(17'-0")	3.87	(5.05)

NOTES

1. Concrete shall be 332 kg/M^3 –C–22Mpa (560–C–3250).
2. Exposed corners shall be chamfered 19mm (3/4").

LEGEND ON PLANS

Revision	By	Approved	Date
ORIGINAL		Kercheval	12/75
Add Metric		T. Stanton	03/03
Reformatted		T. Stanton	04/06

SAN DIEGO REGIONAL STANDARD DRAWING

STRAIGHT HEADWALL - TYPE B (CIRCULAR PIPE)

RECOMMENDED BY THE SAN DIEGO REGIONAL STANDARDS COMMITTEE

T. Stanton 3/10/2003

Chairperson R.C.E. 19246 Date

DRAWING NUMBER **D-32**

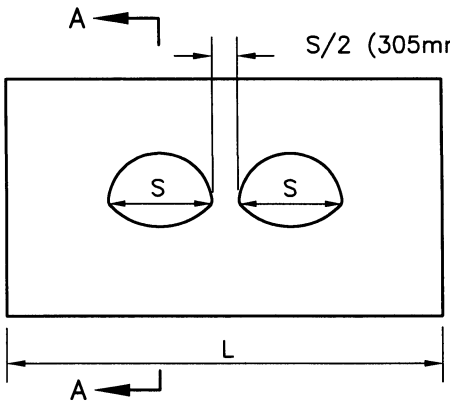

DOUBLE PIPE ELEVATION

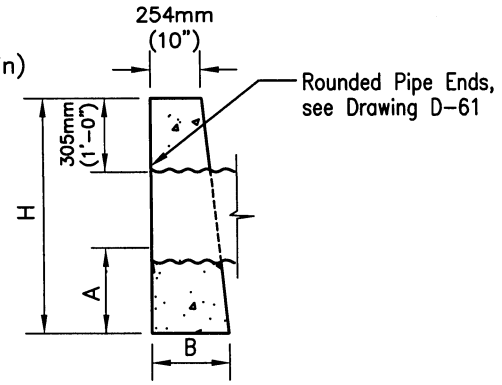

SECTION A-A

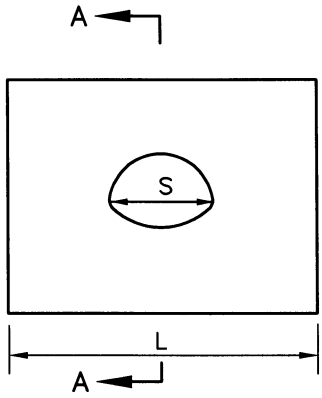

SINGLE PIPE ELEVATION

C.S.P. ARCH SIZE	A		B		H		SINGLE				DOUBLE			
							L		Concrete		L		Concrete	
Metric (inches)	mm	ft./in.	mm	ft./in.	m	ft./in.	m	ft.	cu m	C.Y.	m	ft./in.	cu m	C.Y.
450mmx275mm (18x11)	610	(2'-0")	356	(1'-2")	1.19	(3'-11")	1.83	(6')	0.64	(0.83)	2.21	(7'-3")	0.75	(0.97)
525mmx375mm (21x15)	610	(2'-0")	406	(1'-4")	1.24	(4'-1")	2.13	(7')	0.83	(1.08)	2.95	(9'-8")	1.12	(1.46)
600mmx450mm (24x18)	610	(2'-0")	457	(1'-6")	1.32	(4'-4")	2.44	(8')	1.08	(1.41)	3.51	(11'-6")	1.52	(1.98)
700mmx500mm (28x20)	762	(2'-6")	508	(1'-8")	1.52	(5'-0")	2.74	(9')	1.51	(1.97)	3.81	(12'-6")	2.04	(2.66)
875mmx600mm (35x24)	762	(2'-6")	610	(2'-0")	1.63	(5'-4")	3.05	(10')	1.96	(2.56)	4.37	(14'-5")	2.76	(3.60)

NOTES

1. Concrete shall be 332 kg/M^3 -C-22Mpa (560-C-3250)
2. Exposed corners to be chamfered 19mm (3/4").

LEGEND ON PLANS

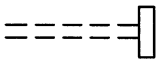

Revision	By	Approved	Date
ORIGINAL		Kercheval	12/75
Add Metric		T. Stanton	03/03
Reformatted		T. Stanton	04/06

SAN DIEGO REGIONAL STANDARD DRAWING

STRAIGHT HEADWALL - TYPE B
(C.S.P. - ARCH PIPE)

RECOMMENDED BY THE SAN DIEGO REGIONAL STANDARDS COMMITTEE

T. Stanton 3/01/2003

Chairperson R.C.E. 19246 Date

DRAWING NUMBER **D-33**

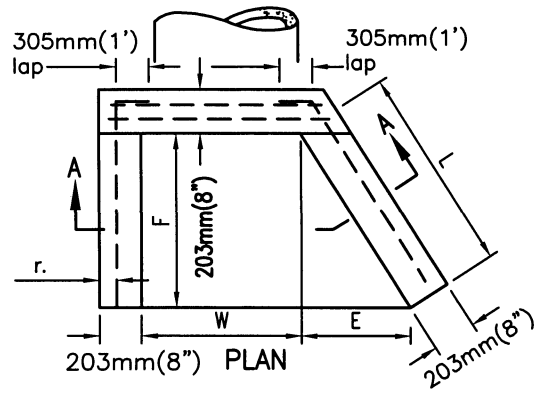

U TYPE

WING TYPE

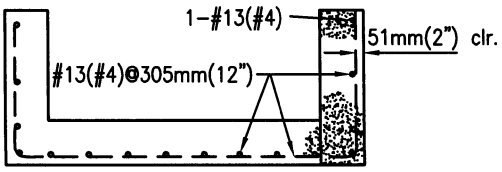

SECTION A-A

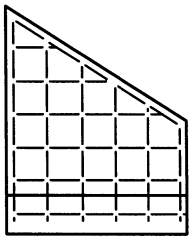

WING WALL REINFORCING

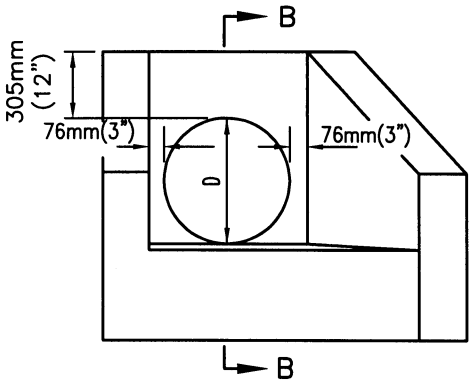

ELEVATION

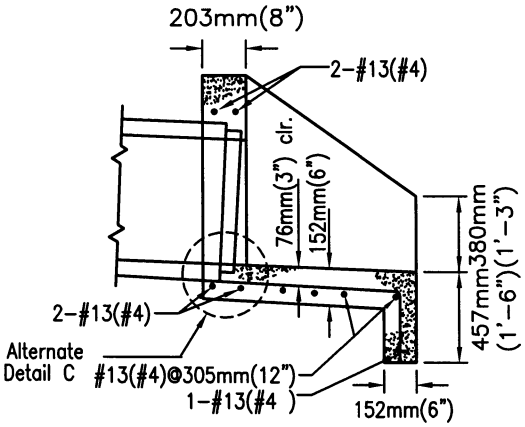

SECTION B-B

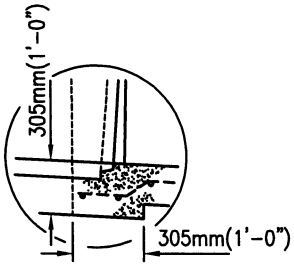

ALT. DETAIL C

	DIA. OF PIPE	DIMENSIONS			DOUBLE PIPE					DOUBLE PIPE				
					W	U TYPE		WING TYPE		W	U TYPE		WING TYPE	
		L	E	F		CONC.	STEEL	CONC.	STEEL		CONC.	STEEL	CONC.	STEEL
Metric	450mm	689mm	381mm	571mm	610mm	0.43kg	16kg	0.49kg	20kg	AS SHOWN ON PLANS	0.63kg	24kg	0.69kg	28kg
US	18"	2'-3 1/8"	1'-3"	1'-10 1/2"	2'-0"	0.55yd	35lb	0.63yd	43lb		0.82yd	53lb	0.90yd	61lb
Metric	600mm	962mm	533mm	800mm	762mm	0.61kg	22kg	0.72kg	28kg		1.0kg	34kg	1.1kg	39kg
US	24"	3'-1 7/8"	1'-9"	2'-7 1/2"	2'-6"	0.79yd	47lb	0.93yd	60lb		1.22yd	73lb	1.36yd	86lb
Metric	750mm	1.24m	686mm	1.03m	914mm	.81kg	33kg	1.0kg	39kg		1.3kg	50kg	1.5kg	56kg
US	30"	4'-0 5/8"	2'-3"	3'-4 1/2"	3'-0"	1.05yd	71lb	1.29yd	85lb		1.66yd	109lb	1.92yd	123lb
Metric	900mm	1.51m	838mm	1.26m	1.07m	1.02kg	40kg	1.30kg	52kg		1.70kg	62kg	1.95kg	74kg
US	36"	4'-11 1/2"	2'-9"	4'-1 1/2"	3'-6"	1.33yd	88lb	1.69yd	114lb		2.19yd	136lb	2.55yd	162lb

NOTES:

1. Concrete shall be 332kg/M^3 -C-22Mpa (560-C-3250)
2. Exposed corners to be chamfered 3/4" (19mm).
3. Multiple pipes to be set a distance of D/2, with a 305mm(1') minimum between outside diameters of pipes.
4. Top of headwall shall be placed approximately parallel to profile grade when the grade is 3% or more.
5. Skewed pipes: Dimension W to be increased in width or length due to skew or multiple pipes.
6. For pipe wall thickness greater than 76mm(3") use alternate Detail-C.

LEGEND ON PLANS

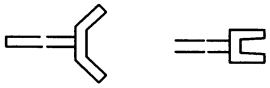

Revision	By	Approved	Date
ORIGINAL		Kercheval	12/75
Add Metric		T. Stanton	03/03
Reformatted		T. Stanton	04/06

SAN DIEGO REGIONAL STANDARD DRAWING

WING AND U TYPE HEADWALLS FOR 450mm (18") TO 900mm (36") PIPES

RECOMMENDED BY THE SAN DIEGO REGIONAL STANDARDS COMMITTEE

3/01/2003

Chairperson R.C.E. 19246 Date

DRAWING NUMBER **D-34**

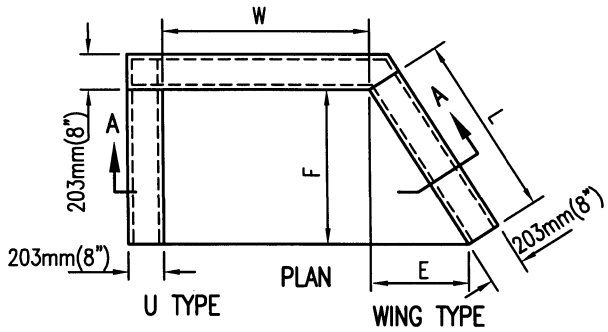

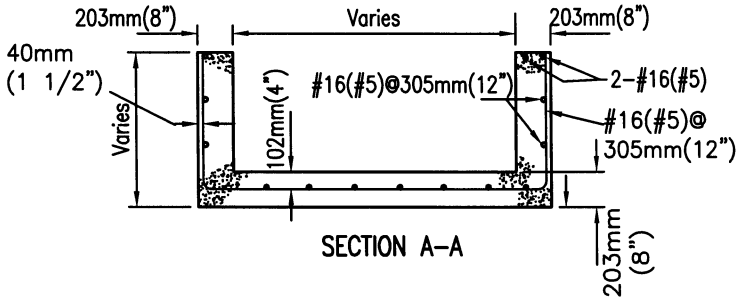

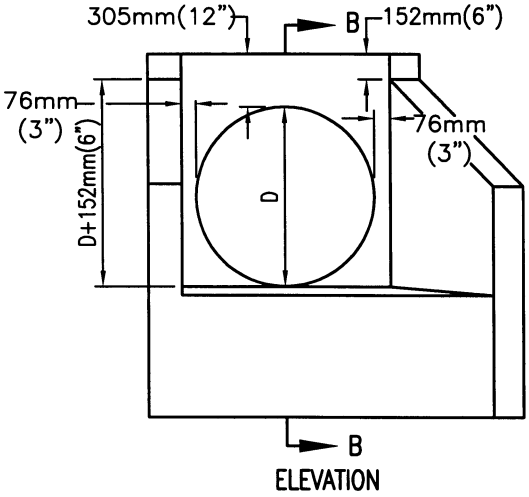

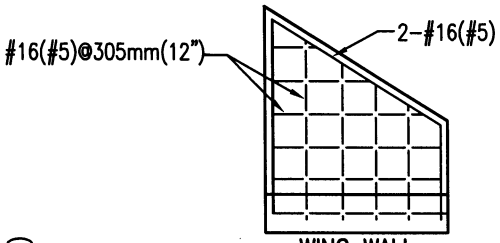

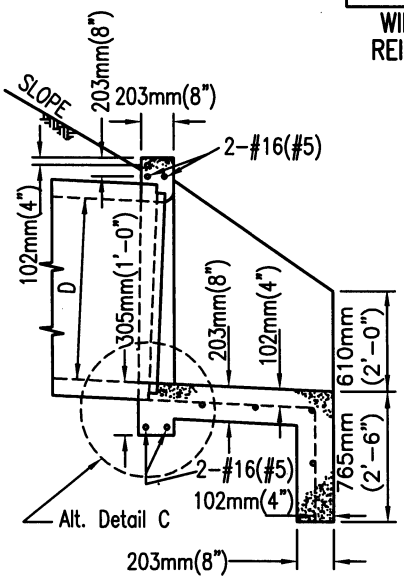

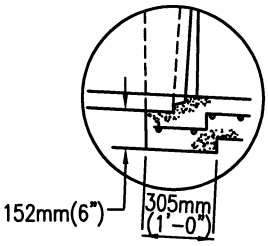

NOTE:

For Dimension Table and General Notes, see D-35B

Revision	By	Approved	Date
ORIGINAL		Kercheval	12/75
Add Metric		T. Stanton	03/03
Reformatted		T. Stanton	04/06

SAN DIEGO REGIONAL STANDARD DRAWING

WING AND U TYPE HEADWALLS FOR 1.0m (42") TO 2.0m (84") PIPE

RECOMMENDED BY THE SAN DIEGO REGIONAL STANDARDS COMMITTEE

T. Stanton 3/01/2003

Chairperson R.C.E. 19246 Date

DRAWING NUMBER **D-35A**

TABLE OF DIMENSIONS AND QUANTITIES FOR DRAWING D-35A

	DIA. OF PIPE	DIMENSIONS			SINGLE PIPE					DOUBLE PIPE				
						U TYPE		WING TYPE			U TYPE		WING TYPE	
		L	E	F	W	CONC.	STEEL	CONC.	STEEL	W	CONC.	STEEL	CONC.	STEEL
						C.Y.	LBS.	C.Y.	LBS.		C.Y.	LBS.	C.Y.	LBS.
Metric	1050mm	1.10m	610mm	914mm	1.22m	1.20 cu m	53.1 kg	1.46 kg	61.3 kg	AS SHOWN ON PLANS	2.1 cu m	86.2 kg	2.5 cu m	97.1 kg
U.S.	42"	3'-7 1/4"	2'-0"	3'-0"	4'-0"	1.57 C.Y.	117lb	1.90 C.Y.	135 lb		2.69 C.Y.	190 lb	3.16 C.Y.	214 lb
Metric	1200mm	1.37m	762mm	1.14m	1.37m	1.51 cu m	70.0 kg	1.90 cu m	84.0 kg		2.62 cu m	115 kg	3.11 cu m	131 kg
U.S.	48"	4'-6"	2'-6"	3'-9"	4'-6"	1.97 C.Y.	153 lb	2.48 C.Y.	184 lb		3.43 C.Y.	252 lb	4.06 C.Y.	288 lb
Metric	1350mm	1.65m	914mm	1.37m	1.52m	1.85 cu m	86.2 kg	2.35 cu m	112 kg		3.25 cu m	145 kg	3.87 cu m	176 kg
U.S.	54"	5'-4 7/8"	3'-0"	4'-6"	5'-0"	2.41 C.Y.	190 lb	3.07 C.Y.	246 lb		4.24 C.Y.	319 lb	5.06 C.Y.	368 lb
Metric	1500mm	1.92m	1.10m	1.60m	1.68m	2.21 cu m	109 kg	2.87 cu m	134 kg		3.40 cu m	175 kg	4.72 cu m	201 kg
U.S.	60"	6'-3 3/4"	3'-6"	5'-3"	5'-6"	2.88 C.Y.	239 lb	3.75 C.Y.	294 lb		5.13 C.Y.	386 lb	6.17 C.Y.	442 lb
Metric	1650mm	2.20m	1.22m	1.83m	6'-0"	2.59 cu m	134 kg	3.46 cu m	162 kg		4.65 cu m	206 kg	5.51 cu m	234 kg
U.S.	66"	7'-2 1/2"	4'-0"	6'-0"	6'-0"	3.38 C.Y.	294 lb	4.52 C.Y.	356 lb		6.08 C.Y.	454 lb	7.20 C.Y.	516 lb
Metric	1800mm	2.47m	1.37m	1.80m	1.98m	3.0 cu m	167 kg	4.22 cu m	190 kg		5.44 cu m	237 kg	6.35 cu m	267 kg
U.S.	72"	8'-1 3/8"	4'-6"	6'-9"	6'-6"	3.93 C.Y.	368 lb	5.52 C.Y.	417 lb		7.11 C.Y.	522 lb	8.30 C.Y.	588 lb
Metric	1950mm	2.74m	1.52m	2.29m	2.13m	3.45 cu m	202 kg	5.13 cu m	229 kg		6.27 cu m	270 kg	7.27 cu m	315 kg
U.S.	78"	9'-0"	5'-0"	7'-6"	7'-0"	4.50 C.Y.	444 lb	6.70 C.Y.	503 lb		8.20 C.Y.	595 lb	9.50 lb	693 lb
Metric	2100mm	2.71m	1.68m	2.51m	2.29m	3.99 cu m	245 kg	6.24 cu m	281 kg		7.27 cu m	312 kg	8.26 cu m	357 kg
U.S.	84"	9'-10 3/4"	5'-6"	8'-3"	7'-6"	5.21 C.Y.	540 lb	8.15 C.Y.	619 lb		9.50 C.Y.	687 lb	10.80 C.Y.	786 lb

Note: Dimensions E and L apply to wing type only.

NOTES:

1. Skewed Pipes: Dimension W to be increased to take care of increased width or length due to skew of multiple pipes.
2. Tops of headwalls, on grade culverts, shall be placed parallel to profile grade when the grades are 3% or more.
3. Concrete shall be 560-C-3250
4. Exposed corners shall chamfered 20mm.
5. Multiple pipes shall be set a distance of D/2, with a 1" minimum, between outside diameters of pipes.
6. For pipe wall thickness greater than 75mm use Alternate Detail-C.

LEGEND ON PLANS

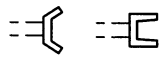

Revision	By	Approved	Date
ORIGINAL		Kercheval	12/75
Add Metric		T. Stanton	03/03
Reformatted		T. Stanton	04/06

SAN DIEGO REGIONAL STANDARD DRAWING

WING AND U TYPE HEADWALLS FOR 1.0 m (42") TO 2.0 m (84") PIPE

RECOMMENDED BY THE SAN DIEGO REGIONAL STANDARDS COMMITTEE

T. Stanton 3/01/2003

Chairperson R.C.E. 19246 Date

DRAWING NUMBER **D-35B**

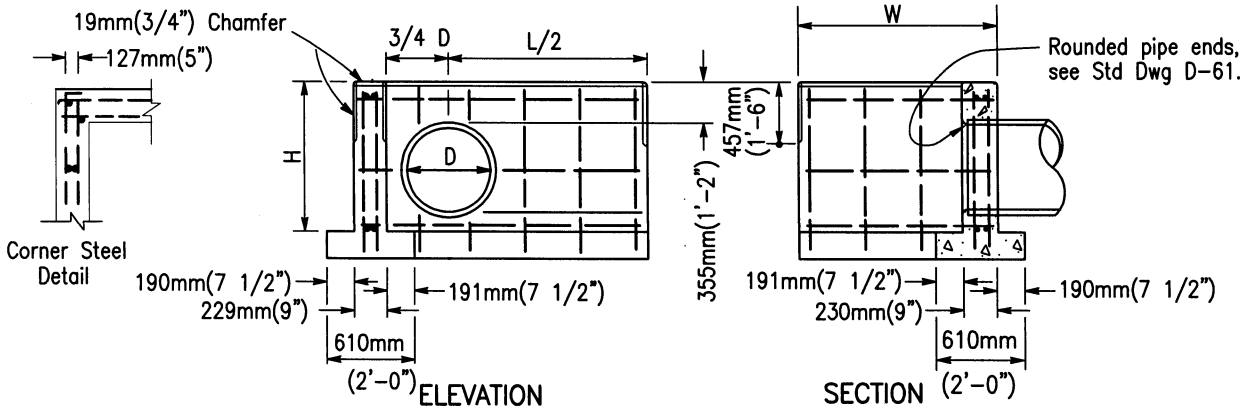

D	H	L/2	965mm (3'-4")		LENGTH OF W 1.47m (4'-10")		1.93m (6'-4")		2.39m (7'-10")		2.85m (9'-4")	
			Steel	Conc	Steel	Conc	Steel	Conc	Steel	Conc	Steel	Conc
300mm 12"	813mm 2'-8"	762mm 2'-6"	22.7kg 50lb	0.61cu m 0.79 C.Y.	27.3kg 60lb	.750cu m 0.98 C.Y.	— —	— —	— —	— —	— —	— —
375mm 15"	889mm 2'-11"	914mm 3'-0"	25.0kg 55lb	0.70cu m 0.91 C.Y.	30.0kg 65lb	.850cu m 1.11 C.Y.	— —	— —	— —	— —	— —	— —
450mm 18"	965mm 3'-2"	1.07m 3'-6"	30.0kg 65lb	.796cu m 1.04 C.Y.	34kg 75lb	.956cu m 1.25 C.Y.	— —	— —	— —	— —	— —	— —
525mm 21"	1.04m 3'-5"	1.14m 3'-9"	34.0kg 75lb	.880cu m 1.15 C.Y.	40.9kg 90lb	1.04cu m 1.36 C.Y.	— —	— —	— —	— —	— —	— —
600mm 24"	1.12m 3'-8"	1.30m 4'-3"	38.6kg 85lb	.990cu m 1.29 C.Y.	45.4kg 100lb	1.16cu m 1.51 C.Y.	50.0kg 110lb	1.33cu m 1.74 C.Y.	— —	— —	— —	— —
675mm 27"	1.14m 3'-11"	1.45m 4'-9"	40.9kg 90lb	1.10cu m 1.44 C.Y.	47.7kg 105lb	1.28cu m 1.67 C.Y.	52.2kg 115lb	1.91cu m 1.91 C.Y.	— —	— —	— —	— —
750mm 30"	1.27m 4'-2"	1.52m 5'-0"	43.0kg 95lb	1.19cu m 1.55 C.Y.	50,0kg 110lb	1.38cu m 1.80 C.Y.	54.5kg 120lb	2.05cu m 2.05 C.Y.	61.3kg 135lb	1.75cu m 2.29 C.Y.	— —	— —
825mm 33"	1.35m 4'-5"	1.68m 5'-6"	47.7kg 105lb	1.31cu m 1.71 C.Y.	54.5kg 120lb	1.51cu m 1.97 C.Y.	61.3kg 135lb	2.23cu m 2.23 C.Y.	68.0kg 150lb	1.90cu m 2.48 C.Y.	— —	— —
900mm 36"	1.42m 4'-8"	1.83m 6'-0"	50.0kg 110lb	1.44cu m 1.88 C.Y.	56.7kg 125lb	1.65cu m 2.15 C.Y.	63.5kg 140lb	2.41cu m 2.41 C.Y.	70.3kg 155lb	2.05cu m 2.68 C.Y.	77.2kg 170lb	2.26cu m 2.95 C.Y.
975mm 39"	1.25m 4'-11"	1.90m 6'-3"	— —	— —	68.0kg 150lb	1.75cu m 2.28 C.Y.	77.2kg 170lb	2.56cu m 2.56 C.Y.	84.0kg 185lb	2.18cu m 2.84 C.Y.	90.8kg 200lb	2.39cu m 3.12 C.Y.
1050mm 42"	1.58m 5'-2"	2.06m 6'-9"	— —	— —	70.3kg 155lb	1.85cu m 2.42 C.Y.	79.4kg 175lb	2.76cu m 2.76 C.Y.	86.2kg 190lb	2.34cu m 3.05 C.Y.	95.3kg 210lb	2.56cu m 3.34 C.Y.
1125mm 45"	1.65m 5'-5"	2.21m 7'-3"	— —	— —	— —	— —	81.7kg 180lb	2.97cu m 2.97 C.Y.	90.8kg 200lb	2.50cu m 3.27 C.Y.	97.6kg 215lb	2.73cu m 3.57 C.Y.
1200mm 48"	1.73m 5'-8"	2.29m 7'-6"	— —	— —	— —	— —	86.2kg 190lb	3.13cu m 3.13 C.Y.	98.0kg 216lb	2.63cu m 3.44 C.Y.	105kg 230lb	2.87cu m 3.75 C.Y.
1275mm 51"	1.80m 5'-11"	2.44m 8'-0"	— —	— —	— —	— —	— —	— —	99.8kg 220lb	2.81cu m 3.67 C.Y.	107kg 235lb	3.05cu m 3.99 C.Y.
1350mm 54"	1.88m 6'-2"	2.59m 8'-6"	— —	— —	— —	— —	— —	— —	107kg 235lb	2.99cu m 3.91 C.Y.	114kg 250lb	3.25cu m 4.24 C.Y.

NOTES

1. Concrete shall be 332 kg/M^3 -C-22Mpa (560-C-3250).
2. All reinforcing steel #13 (#4) bars. All vertical and horizontal tie bars 460mm (18") maximum spacing.
3. When multiple pipes are used, the distance between pipes shall be D/2 (300mm (1') min.). The dimension L/2 is from the center of the pipe to the end of the headwall as shown.

LEGEND ON PLANS

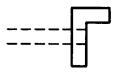

Revision	By	Approved	Date
ORIGINAL		Kercheval	12/75
Add Metric		T. Stanton	03/03
Reformatted		T. Stanton	04/06

SAN DIEGO REGIONAL STANDARD DRAWING

L TYPE HEADWALLS CIRCULAR PIPES

RECOMMENDED BY THE SAN DIEGO REGIONAL STANDARDS COMMITTEE

T. Stanton 3/01/2003

Chairperson R.C.E. 19246 Date

DRAWING NUMBER **D-36**

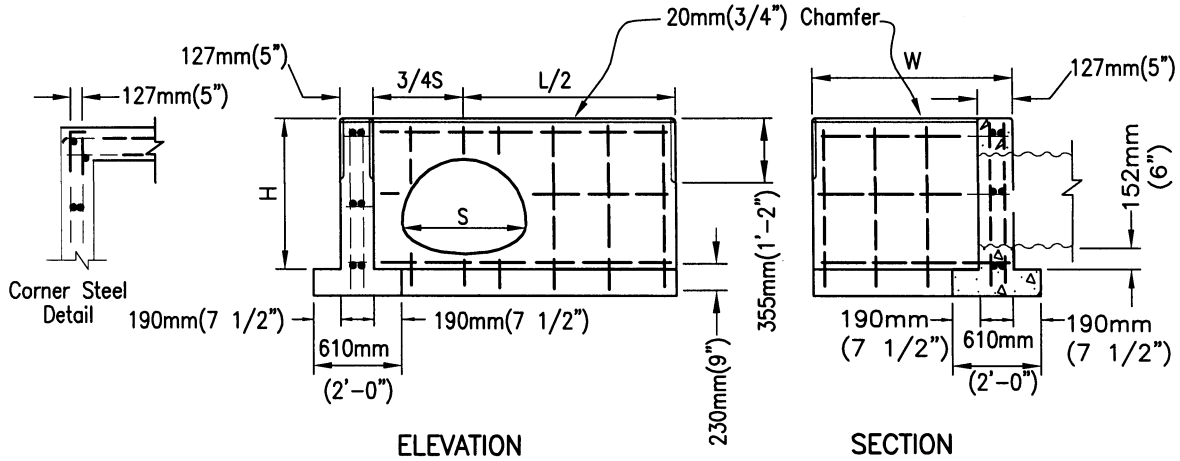

CSP ARCH SIZE		H	L/2	LENGTH OF W									
				1.02m (3'-4")		1.47m (4'-10")		1.93m (6'-4")		2.39m (7'-10")		2.84m (9'-4")	
				Steel	Conc	Steel	Conc	Steel	Conc	Steel	Conc	Steel	Conc
Metric U.S.	450mm x 275mm 18"x11"	787mm 2'-7"	838mm 2'-9"	22.7kg 50lb	.643cu m 0.84 C.Y.	27.3kg 60lb	.788cu m 1.03 C.Y.	31.8kg 70lb	.926cu m 1.21 C.Y.	36.3kg 80lb	1.07cu m 1.39 C.Y.	40.9kg 90lb	1.20cu m 1.57 C.Y.
Metric U.S.	525mm x 375mm 21"x15"	889mm 2'-11"	991mm 3'-3"	27.3kg 60lb	.765cu m 1.00 C.Y.	29.5kg 65lb	.910cu m 1.18 C.Y.	34.0kg 75lb	1.06cu m 1.38 C.Y.	40.9kg 90lb	1.21cu m 1.58 C.Y.	54.4kg 100lb	1.36cu m 1.77 C.Y.
Metric U.S.	600mm x 450mm 24"x18"	965mm 3'-2"	1.14m 3'-9"	27.3kg 60lb	.818cu m 1.07 C.Y.	31.8kg 70lb	1.00cu m 1.32 C.Y.	36.3kg 80lb	1.17cu m 1.53 C.Y.	43.1kg 95lb	1.33cu m 1.74 C.Y.	49.9kg 110lb	1.49cu m 1.94 C.Y.
Metric U.S.	700mm x 500mm 28"x20"	1.02m 3'-4"	1.30m 4'-3"	31.8kg 70lb	.964cu m 1.26 C.Y.	36.3kg 80lb	1.13cu m 1.47 C.Y.	40.9kg 90lb	1.29cu m 1.68 C.Y.	45.4kg 100lb	1.45cu m 1.90 C.Y.	52.2kg 115lb	1.62cu m 2.11 C.Y.
Metric U.S.	875mm x 600mm 35"x24"	1.07m 3'-8"	1.35m 5'-3"	45.36 100lb	1.16cu m 1.51 C.Y.	49.9kg 110lb	1.33cu m 1.74 C.Y.	54.5kg 120lb	1.51cu m 1.97 C.Y.	63.5kg 140lb	1.69cu m 2.20 C.Y.	70.3kg 155lb	1.85cu m 2.42 C.Y.
Metric U.S.	1050mm x 725mm 42"x29"	1.25m 4'-1"	1.90m 6'-3"	52.2kg 115lb	1.40cu m 1.82 C.Y.	59.0kg 130lb	1.58cu m 2.06 C.Y.	63.5kg 140lb	1.77cu m 2.31 C.Y.	70.3kg 155lb	1.95cu m 2.55 C.Y.	77.2kg 170lb	2.17cu m 2.83 C.Y.
Metric U.S.	1225mm x 825mm 49"x33"	1.35m 4'-5"	2.21m 7'-3"	59.0kg 130lb	1.62cu m 2.12 C.Y.	65.8kg 145lb	1.82cu m 2.37 C.Y.	70.3kg 155lb	2.02cu m 2.64 C.Y.	77.2kg 170lb	2.22cu m 2.90 C.Y.	84.0kg 185lb	2.41cu m 3.15 C.Y.
Metric U.S.	1425mm x 950mm 57"x38"	1.47m 4'-10"	2.59m 8'-6"	65.8kg 145lb	1.93cu m 2.52 C.Y.	75.6kg 160lb	2.14cu m 2.79 C.Y.	79.4kg 175lb	2.35cu m 3.07 C.Y.	86.2kg 190lb	2.57cu m 3.35 C.Y.	93.0kg 205lb	2.76cu m 3.61 C.Y.
Metric U.S.	1550mmx1050mm 64"x43"	1.35m 5'-3"	2.90m 9'-6"	84.0kg 185lb	2.21cu m 2.89 C.Y.	90.8kg 200lb	2.38cu m 3.11 C.Y.	97.6kg 215lb	2.66cu m 3.48 C.Y.	107kg 235lb	2.89cu m 3.77 C.Y.	114kg 250lb	3.11cu m 4.06 C.Y.
Metric U.S.	1775mmx1175mm 71"x47"	1.45m 5'-7"	3.20m 10'-6"	90.8kg 200lb	2.49cu m 3.25 C.Y.	97.6kg 215lb	2.73cu m 3.56 C.Y.	107kg 235lb	2.96cu m 3.86 C.Y.	114kg 250lb	3.19cu m 4.17 C.Y.	123kg 270lb	3.43cu m 4.48 C.Y.

NOTES

1. Concrete shall be 332 kg/M^3 –C–22Mpa (560–C–3250)
2. All reinforcing steel #13 (#4) bars. All vertical and horizontal tie bars 460mm (18") maximum spacing.
3. When multiple pipes are used, the distance between pipes shall be S/2 (305mm (1') min.). The dimension L/2 is from the center of the pipe to the end of the headwall as shown.

LEGEND ON PLANS

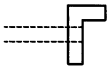

Revision	By	Approved	Date
ORIGINAL		Kercheval	12/75
Add Metric		T. Stanton	03/03
Reformatted		T. Stanton	04/06

SAN DIEGO REGIONAL STANDARD DRAWING

L TYPE HEADWALLS
C.S.P. ARCH PIPE

RECOMMENDED BY THE SAN DIEGO REGIONAL STANDARDS COMMITTEE

T. Stanton 3/10/2003

Chairperson R.C.E. 19246 Date

DRAWING NUMBER **D-37**

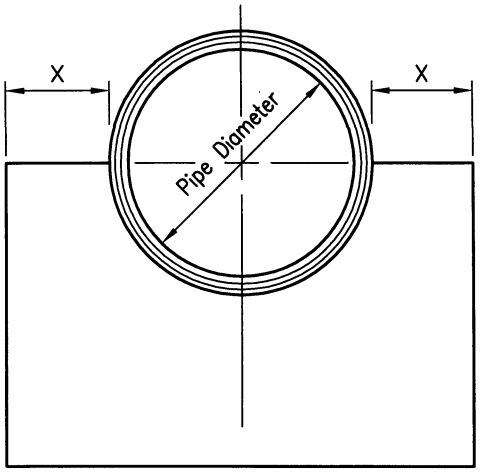

FACE ELEVATION

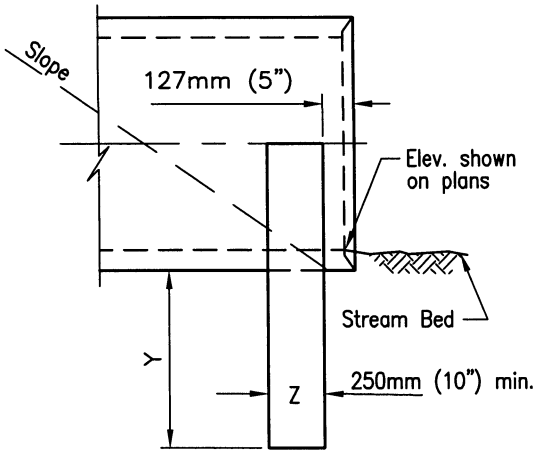

SIDE ELEVATION

PIPE DIAMETER	X	Y	Z
300mm (12") TO 600mm (24")	310mm (1"–0")	610mm (2"–0")	254mm (10")
525mm (21") TO 900mm (36")	457mm (1"–6")	762mm (2"–6")	305mm (12")
975mm (39") TO 1200mm (48")	610mm (2'–0")	914mm (3'–0")	305mm (12")
1275mm (51") TO 1500mm (60")	762mm (2'–6")	914mm (3'–0")	356mm (14")
1575mm (63") & Larger	914mm (3'–0")	914mm (3'–0")	356mm (14")

NOTES

1. A curtain wall shall be used in place of a headwall at culvert ends where extension of the culvert is considered imminent or, no fill is retained.
2. Concrete shall be 332 kg/M^3 –C–22Mpa (560–C–3250) .
3. Keep the pipe–end clear of obstructions to permit easy placing of culvert extension.

LEGEND ON PLANS

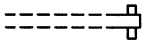

Revision	By	Approved	Date
ORIGINAL		Kercheval	12/75
Add Metric		T. Stanton	03/03
Reformatted		T. Stanton	04/06

SAN DIEGO REGIONAL STANDARD DRAWING

CURTAIN WALL

RECOMMENDED BY THE SAN DIEGO REGIONAL STANDARDS COMMITTEE

T. A. Stanton 3/01/2003

Chairperson R.C.E. 19246 Date

DRAWING NUMBER **D-38**

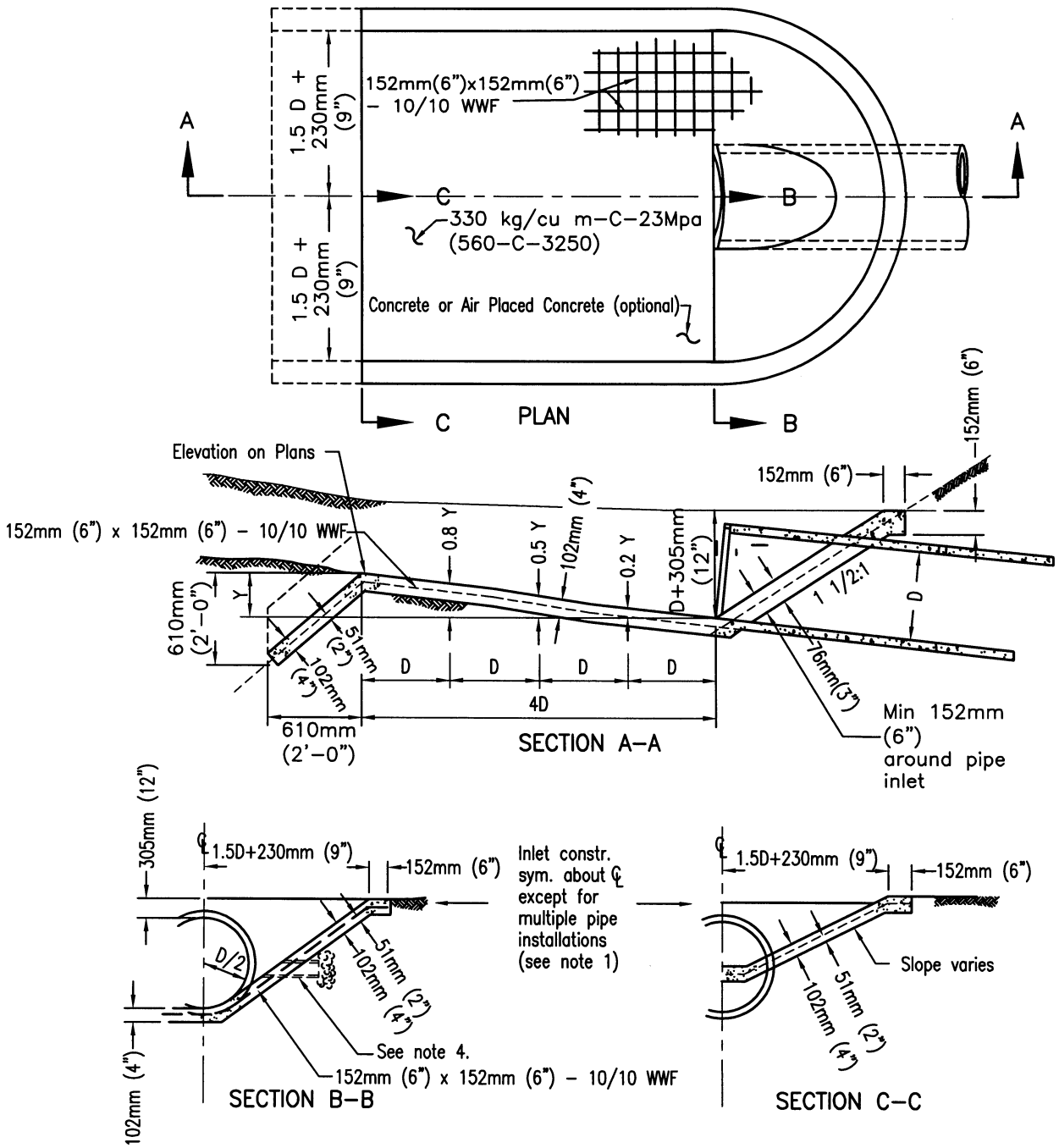

NOTES

1. When more than one pipe is used the profile view shown shall hold for the distance across across all pipe openings. Section A-A and B-B shall be from the outermost pipe. The distance between pipes shall be D/2 for round and Span/3 for arch pipe. (305mm (12") minimum).
2. Culvert shall be cut off even with apron surface when required by the Agency.
3. Use inlet apron only where a flared and section can not be utilized.
4. Place weep holes when required by the Agency.

LEGEND ON PLANS

Revision	By	Approved	Date
ORIGINAL		Kercheval	12/75
Add Metric		T. Stanton	03/03
Reformatted		T. Stanton	04/06

SAN DIEGO REGIONAL STANDARD DRAWING

INLET APRON FOR CULVERTS UP TO 1050mm (42") DIAMETER

RECOMMENDED BY THE SAN DIEGO REGIONAL STANDARDS COMMITTEE

T. Stanton 3/01/2003

Chairperson R.C.E. 19246 Date

DRAWING NUMBER **D-39**

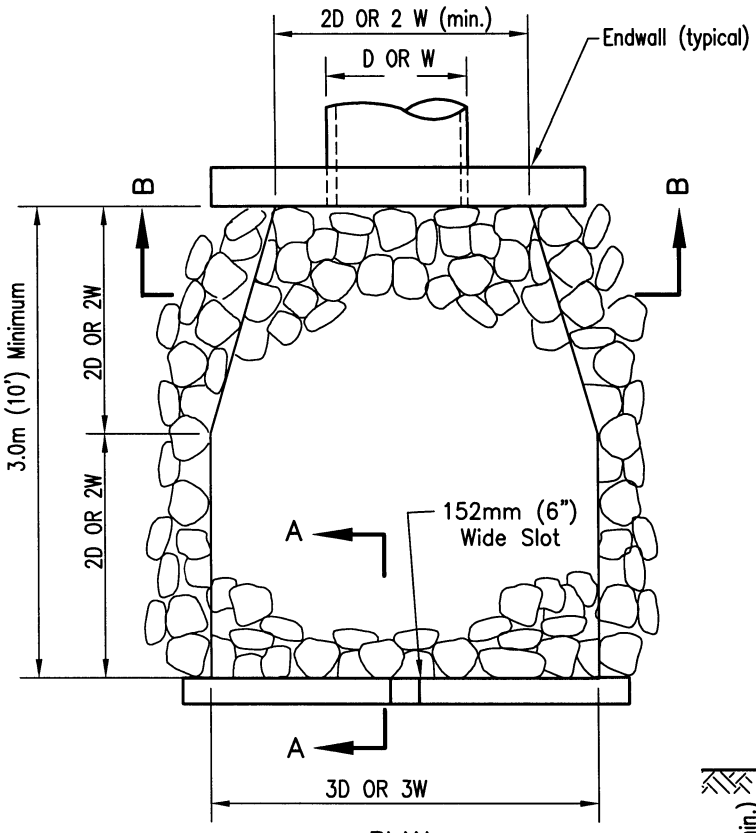

PLAN

Design Velocity m/sec (ft/sec)*	Rock Classification	T (min)
1.8–3 (6–10)	No. 2 Backing	320mm (1.1ft)
3–3.7 (10–12)	220 kg (1/4 ton)	823mm (2.7ft)
3.7–4.3 (12–14)	450 kg (1/2 ton)	1.1m (3.5ft)
4.3–4.9 (14–16)	900 kg (1 ton)	1.3m (4.4ft)
4.9–5.5 (16–18)	1.8 tonne (2 ton)	1.6m (5.4ft)

*over 5.5 mps (18 fps) requires special design

D = Pipe Diameter
W = Bottom Width of Channel

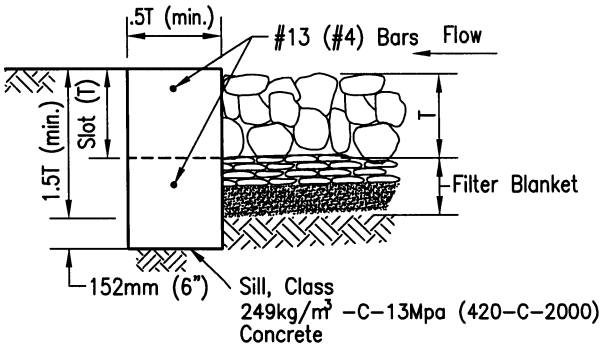

SECTION A–A

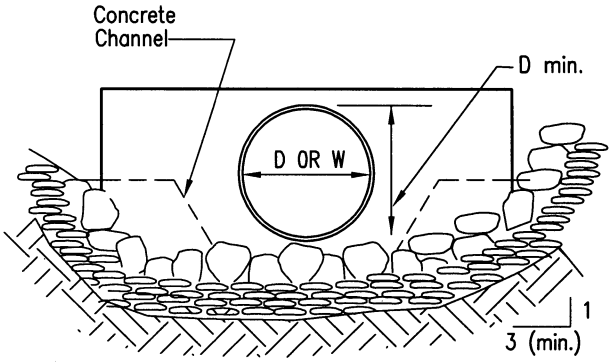

SECTION B–B

NOTES

1. Plans shall specify:
   A) Rock Class and thickness (T).
   B) Filter material, number of layers and thickness.
2. Rip rap shall be either quarry stone or broken concrete (if shown on the plans.) Cobbles are not acceptable.
3. Rip rap shall be placed over filter blanket which may be either granular material or filter fabric (woven filter slit film fabric shall not be used).
4. See Regional Supplement Amendments for selection of filter blanket.
5. Rip rap energy dissipators shall be designated as either Type 1 or Type 2. Type 1 shall be with concrete sill; Type 2 shall be without sill.

Revision	By	Approved	Date
ORIGINAL		Kercheval	12/75
Add Metric		T. Stanton	03/03
Add Rip Rap Table		S. Brady	04/06

SAN DIEGO REGIONAL STANDARD DRAWING

RIP RAP ENERGY DISSIPATOR

RECOMMENDED BY THE SAN DIEGO REGIONAL STANDARDS COMMITTEE

T. Stanton 04/27/2006

Chairperson R.C.E. 19246 Date

DRAWING NUMBER **D-40**

SEE SDD-100

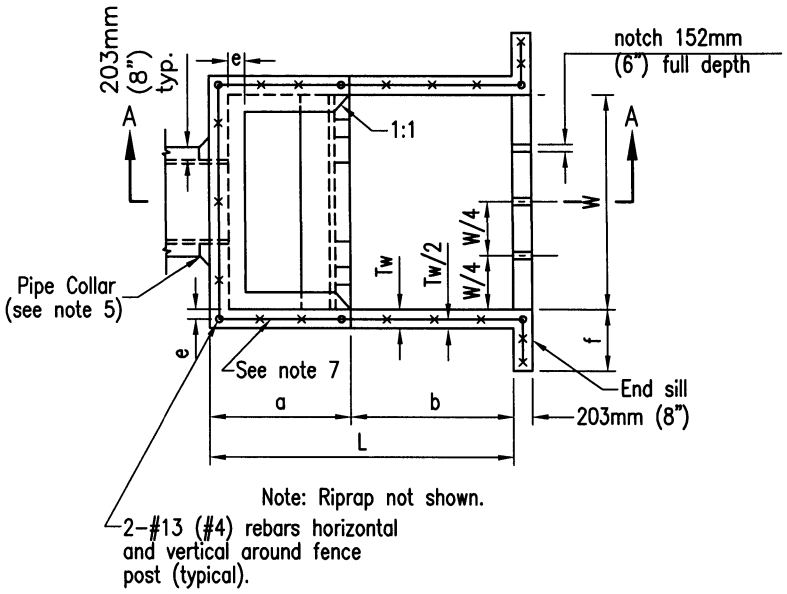

PLAN

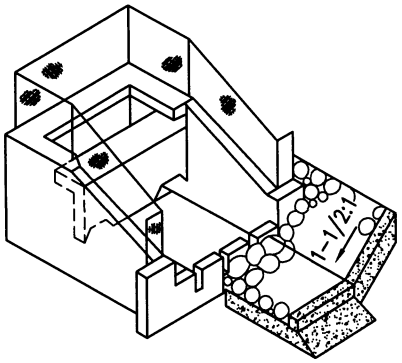

PICTORIAL VIEW

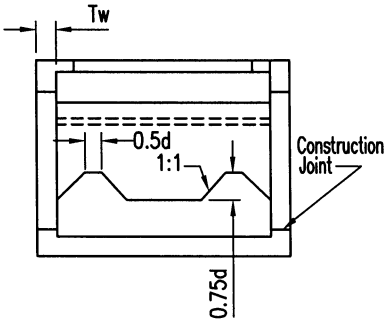

SECTION B–B

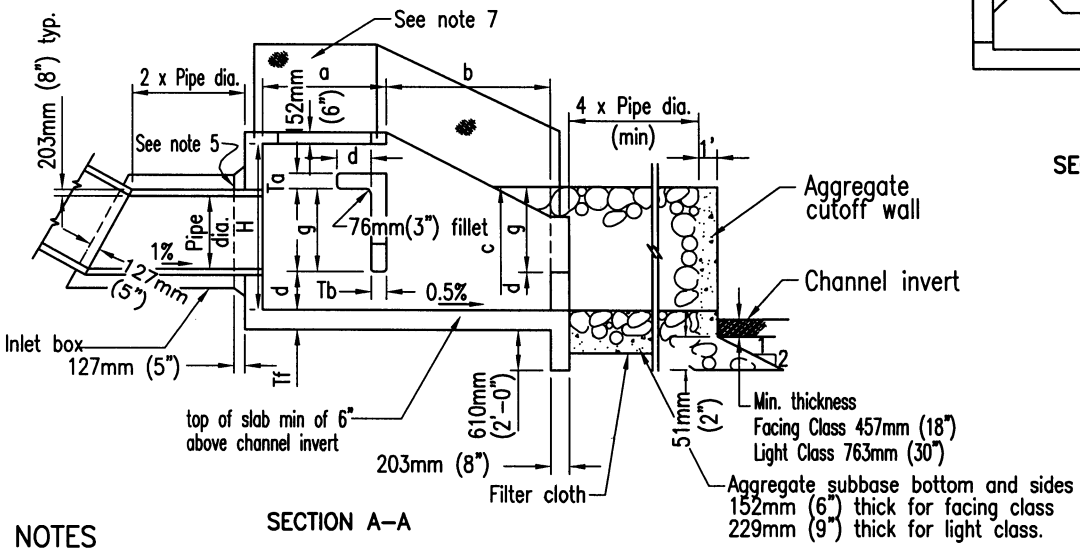

SECTION A–A

NOTES

1. Design
   Equivalent Fluid Pressure (Earth Loading)= 961 kg/cu m (60 p.c.f.) Maximum Outlet velocity = 10.7m (35')/s
2. Concrete shall be 332 kg/M^3–C–22Mpa (560–C–3250)
3. Reinforcing shall conform to ASTM designation A615 and may be grade 40 or 60. Reinforcing shall be placed with 51mm (2") clear concrete cover unless noted otherwise. Splices shall not be permitted except as indicated on the plans.
4. For pipe grades not exceeding 20%, inlet box may be omitted.
5. If inlet box is omitted, construct pipe collar as shown.
6. Unless noted otherwise, all reinforcing bar bends shall be fabricated with standard hooks.
7. Five foot high chain link fencing, embed post 18" deep in walls and encase with class B mortar.
8. In Sandy and Silty soil:
   a) Riprap and aggregate base cutoff wall required at the end of rock apron.
   b) Filter cloth (Polyfilter X or equivalent) shall be installed on native soil base, minimum of 305mm (1 ft.) overlaps at joints.
9. Rip rap and subbase classification shall be as shown on plans.

FOR DIMENSIONS, SEE D–41B.

Revision	By	Approved	Date
ORIGINAL		Kercheval	12/75
Add Metric		T. Stanton	03/03
Reformatted		T. Stanton	04/06

SAN DIEGO REGIONAL STANDARD DRAWING

CONCRETE ENERGY DISSIPATOR

RECOMMENDED BY THE SAN DIEGO REGIONAL STANDARDS COMMITTEE

T. Stanton 3/01/2003

Chairperson R.C.E. 19246 Date

DRAWING NUMBER **D-41A**

SEE SDD-100

METRIC DIMENSIONS TABLE, FOR STRUCTURE DETAILS SEE D-41A.

Pipe Dia	457mm	610mm	9.14m	11.0m	12.80m	14.63m	16.46m	18.29m	21.95m
Area (sq. m)	.164	.292	.456	.657	.893	1.17	.1.48	1.82	2.63
Max. Q (cu m/s)	.594	1.08	1.67	2.41	3.26	4.28	5.41	6.68	9.60
W	1.66m	1.80m	2.13m	2.82m	3.20m	3.58m	3.96	4.34	5.03m
H	1.30m	1.60m	1.90m	2.21m	2.44m	2.74m	2.87m	3.28m	3.73m
L	2.24m	2.74m	3.25m	3.76m	4.27m	4.78m	5.28m	5.79m	6.71m
a	991mm	1.19m	1.40m	1.60m	1.83m	1.80m	2.24m	2.44m	2.82m
b	1.24m	1.55m	1.85m	2.16m	2.44m	2.72m	3.05m	3.35m	3.87m
c	711mm	864mm	1.02m	1.17m	1.35m	1.50m	1.65m	1.80m	2.11m
d	279mm	356mm	406mm	482mm	533mm	610mm	660mm	737mm	838mm
e	152mm	152mm	203mm	203mm	254mm	254mm	305mm	305mm	381mm
f	457mm	610mm	762mm	914mm	914mm	914mm	914mm	914mm	914mm
g	635mm	762mm	914mm	1.07m	1.19m	1.35m	1.50m	1.63m	1.88m
Tf	203mm			254mm		305mm			
Tb	178mm			241mm		267mm			
Tw	178mm			241mm		267mm			
Ta	178mm			203mm					

IMPERIAL DIMENSIONS TABLE, FOR STRUCTURE DETAILS SEE D-41A.

Pipe Dia (in)	18	24	30	36	42	48	54	60	72
Area (sq.ft.)	1.77	3.14	4.91	7.07	9.62	12.57	15.90	19.63	28.27
Max. Q (cfs)	21	38	59	85	115	151	191	236	339
W	5'-6"	6'-9"	8'-0"	9'-3"	10'-6"	11'-9"	13'-0"	14'-3"	16'-6"
H	4'-3"	5'-3"	6'-3"	7'-3"	8'-0"	9'-0"	9'-9"	10'-9"	12'-3"
L	7'-4"	9'-0"	10'-8"	12'-4"	14'-0"	15'-8"	17'-4"	19'-0"	22'-0"
a	3'-3"	3'-11"	4'-7"	5'-3"	6'-0"	6'-9"	7'-4"	8'-0"	9'-3"
b	4'-1"	5'-1"	6'-1"	7'-1"	8'-0"	8'-11"	10'-0"	11'-0"	12'-9"
c	2'-4"	2'-10"	3"-4"	3'-10"	4'-5"	4'-11"	5'-5"	5'-11"	6'-11"
d	0'-11"	1'-2"	1'-4"	1'-7"	1'-9"	2'-0"	2'-2"	2'-5"	2'-9"
e	0'-6"	0'-6"	0'-8"	0'-8"	0'-10"	0'-10"	1'-0"	1'-0"	1'-3"
f	1'-6"	2'-0"	2'-6"	3'-0"	3'-0"	3'-0"	3'-0"	3'-0"	3'-0"
g	2'-1"	2'-6"	3'-0"	3'-6"	3'-11"	4'-5"	4'-11"	5'-4"	6'-2"
Tf	8"			10"		12"			
Tb	7"			9 1/2"		10 1/2"			
Tw	7"			9 1/2"		10 1/2"			
Ta	7"			8"					

Revision	By	Approved	Date
ORIGINAL		Kercheval	12/75
Add Metric		T. Stanton	03/03
Reformatted		T. Stanton	04/06

SAN DIEGO REGIONAL STANDARD DRAWING

CONCRETE ENERGY DISSIPATOR

RECOMMENDED BY THE SAN DIEGO REGIONAL STANDARDS COMMITTEE

T. Stanton 3/01/2003

Chairperson R.C.E. 19246 Date

DRAWING NUMBER **D-41B**

SEE SDD-100

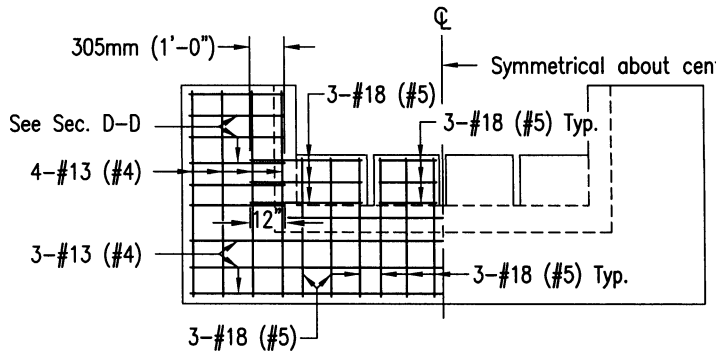

END SILL ELEVATION

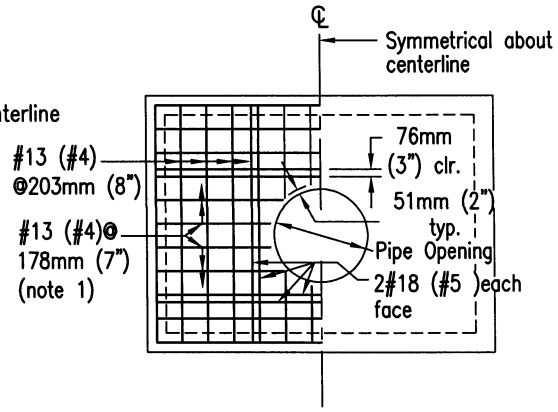

HEADWALL ELEVATION

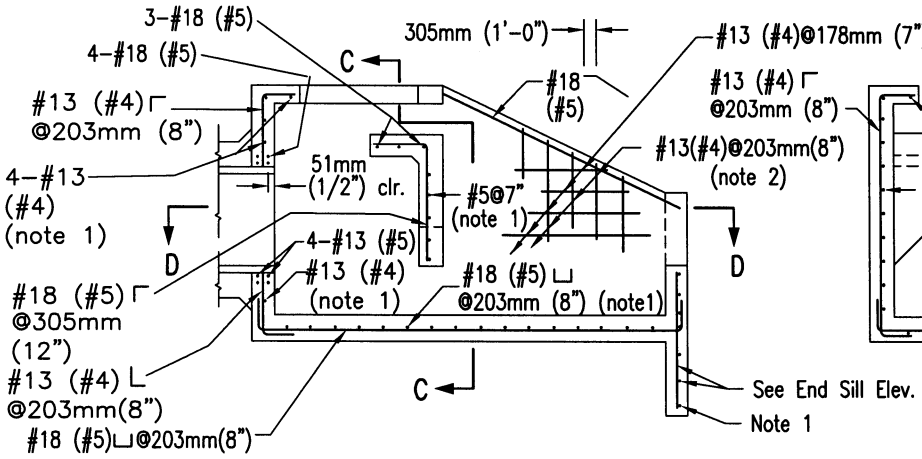

SECTION A–A

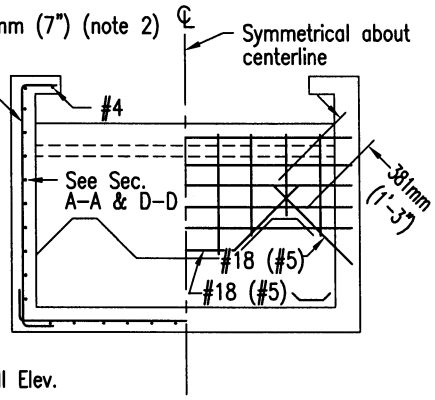

SECTION C–C

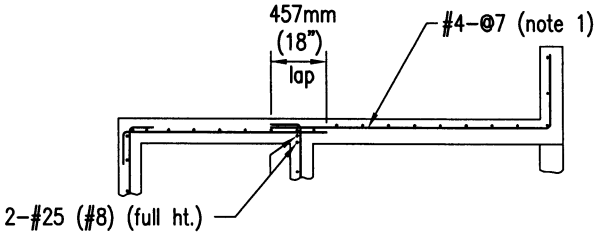

SECTION D–D

NOTES

1. Place reinforcing, as noted, at center wall (or slab).
2. Match location of reinforcing with that in headwall, end sill and foundation slab.
3. All reinforcing shall be placed with 51mm (2") concrete cover, unless noted otherwise.

Revision	By	Approved	Date
ORIGINAL		Kercheval	12/75
Add Metric		T. Stanton	03/03
Reformatted		T. Stanton	04/06

SAN DIEGO REGIONAL STANDARD DRAWING

CONCRETE ENERGY DISSIPATOR (REINFORCEMENT) 450mm (18") TO 750mm (30") DIAMETER PIPE

RECOMMENDED BY THE SAN DIEGO REGIONAL STANDARDS COMMITTEE

T. Stanton 3/10/2003

Chairperson R.C.E. 19246 Date

DRAWING NUMBER **D-42**

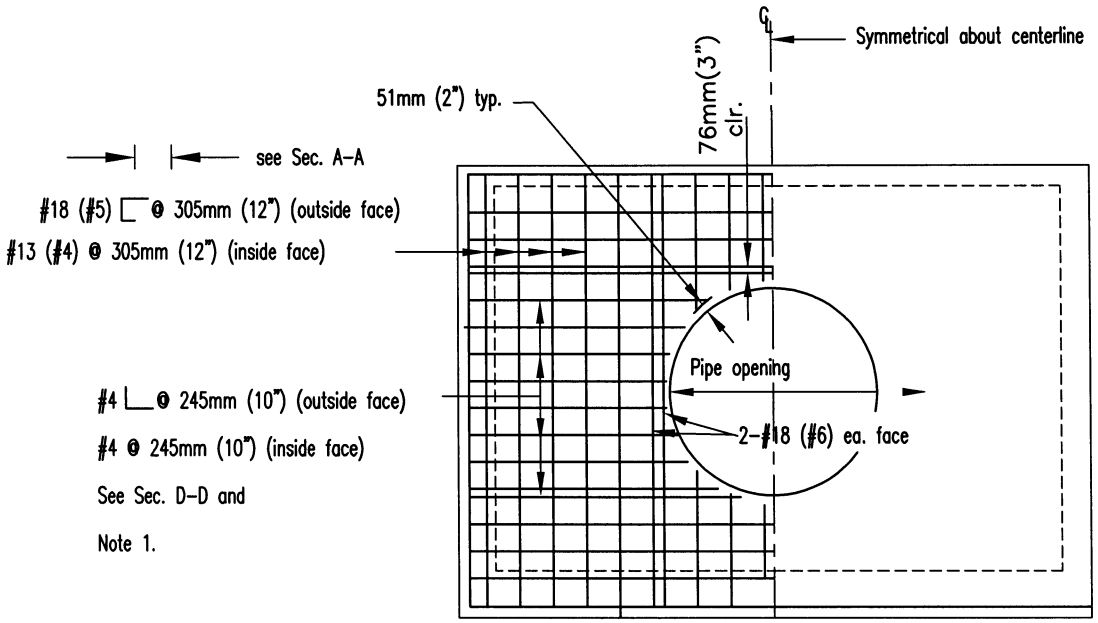

HEADWALL ELEVATION

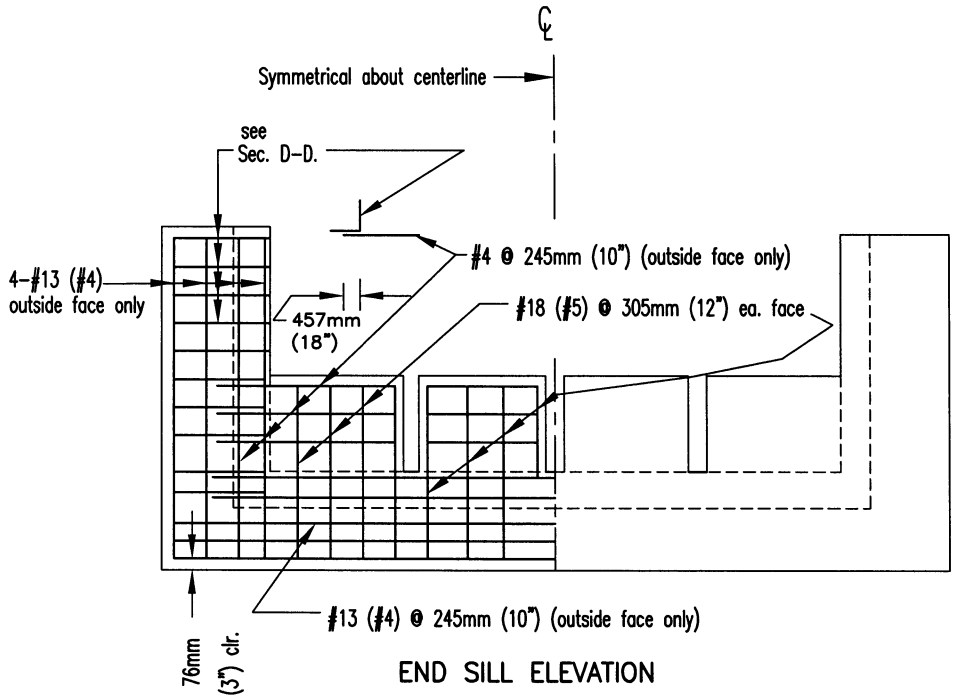

END SILL ELEVATION

Revision	By	Approved	Date
ORIGINAL		Kercheval	12/75
Add Metric		T. Stanton	03/03
Reformatted		T. Stanton	04/06

SAN DIEGO REGIONAL STANDARD DRAWING

CONCRETE ENERGY DISSIPATOR (REINFORCEMENT) 900mm (36") TO 1800mm (72") DIAMETER PIPE

RECOMMENDED BY THE SAN DIEGO REGIONAL STANDARDS COMMITTEE

T. Stanton 3/01/2003

Chairperson R.C.E. 19246 Date

DRAWING NUMBER **D-43A**

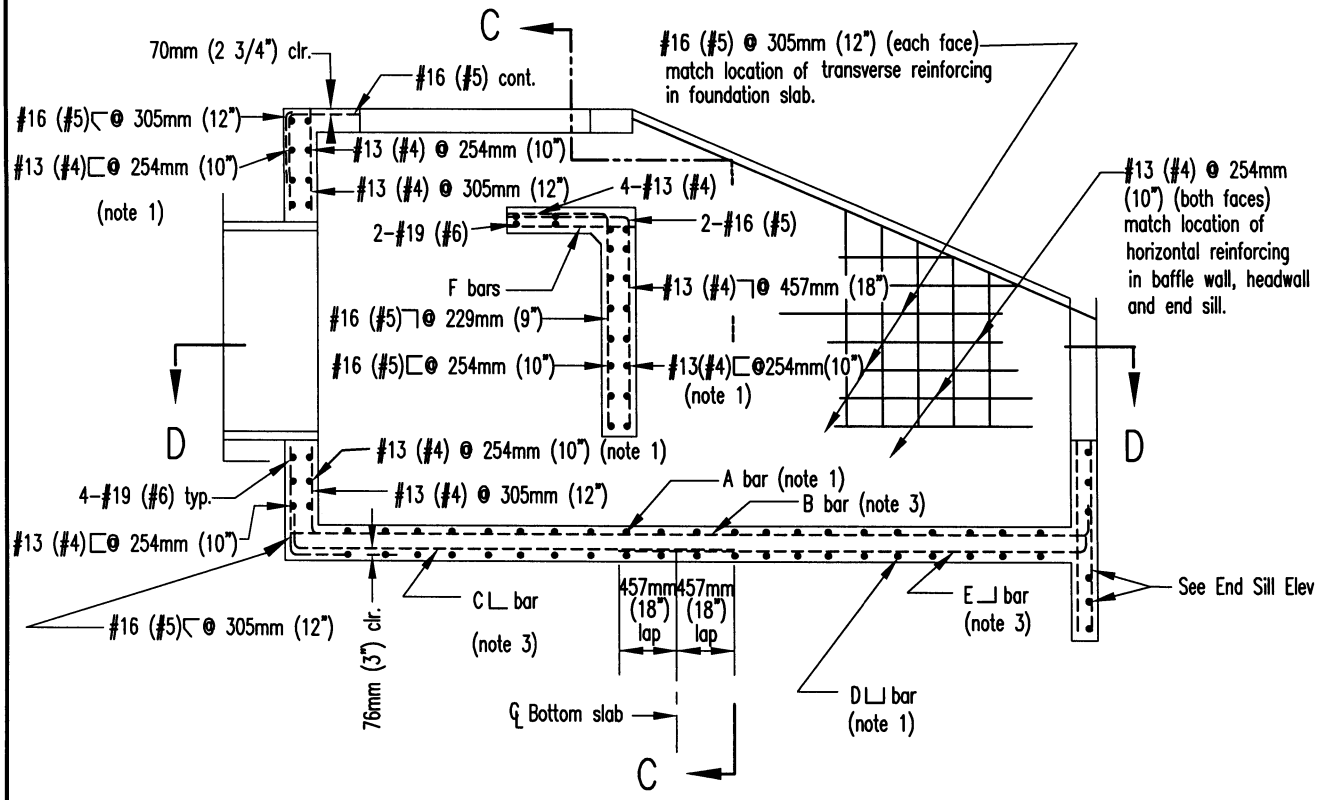

SECTION A–A

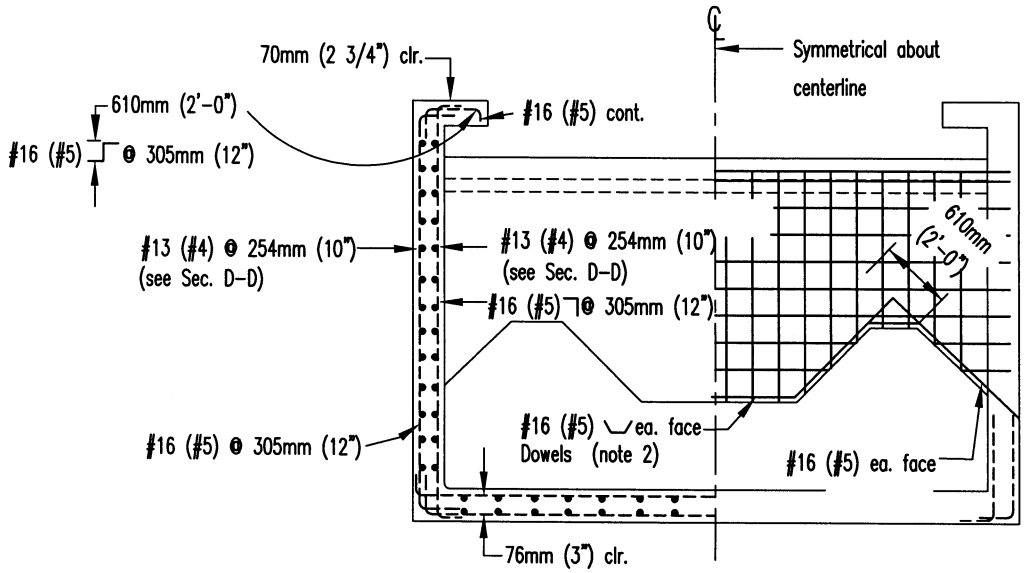

SECTION D–D

Revision	By	Approved	Date
ORIGINAL		Kercheval	12/75
Add Metric		T. Stanton	03/03
Reformatted		T. Stanton	04/06

SAN DIEGO REGIONAL STANDARD DRAWING

CONCRETE ENERGY DISSIPATOR (REINFORCEMENT) 900mm (36") TO 1800mm (72") DIAMETER PIPE

RECOMMENDED BY THE SAN DIEGO REGIONAL STANDARDS COMMITTEE

T. Stanton 3/10/2003

Chairperson R.C.E. 19246 Date

DRAWING NUMBER **D-43B**

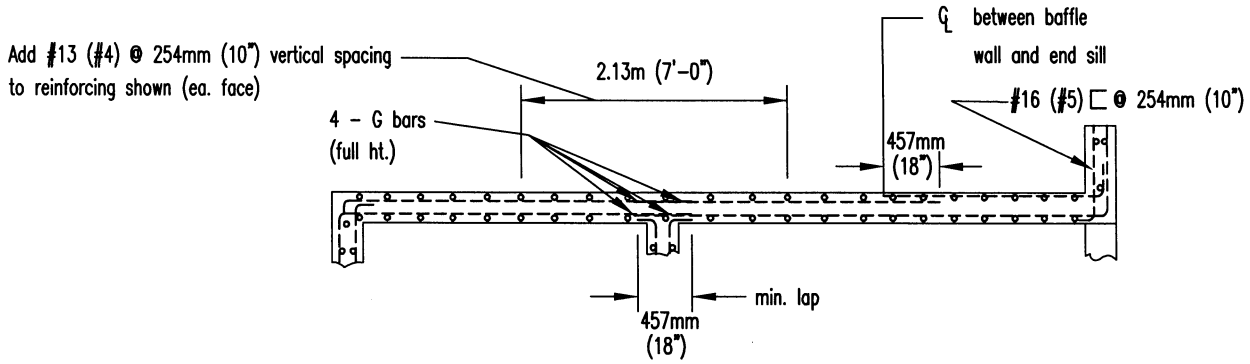

SECTION D–D

Pipe dia. (in.)	914mm (36")	1.07m (42")	1.22m (48")	1.37m (54")	1.52m (60")	1.83m (72")
A bar	#16 (# 5) @ 305mm (12")		#19 (#6) @ 305mm (12")		#22 (#7) @ 305mm (12")	
B bar	#16 (# 5) @ 305mm (12")		#19 (#6) @ 305mm (12")			
C bar	#13 (# 4) @ 305mm (12")		#16 (#5) @ 305mm (12")			
D bar	#13 (# 4) @ 305mm (12")		#16 (#5) @ 305mm (12")		#19 (#6) @ 305mm (12")	
E bar	#13 (# 4) @ 305mm (12")		#16 (#5) @ 305mm (12")			
F bar	#13 (# 4) @ 229mm (9")		#16 (#5) @ 229mm (9")			#19 (#6) @ 229mm (9")
G bar	#22 (# 7)			#36 (# 11)		

NOTES

1. Match location af sidewall reinforcing.
2. Dowels having same size and spacing as wall reinforcing may be used in lieu of continuous bars at contractors option.
3. Match location of headwall or end sill reinforcing.

Revision	By	Approved	Date
ORIGINAL		Kercheval	12/75
Add Metric		T. Stanton	03/03
Reformatted		T. Stanton	04/06

SAN DIEGO REGIONAL STANDARD DRAWING

CONCRETE ENERGY DISSIPATOR (REINFORCEMENT) 900mm (36") TO 1800mm (72") DIAMETER PIPE

RECOMMENDED BY THE SAN DIEGO REGIONAL STANDARDS COMMITTEE

T. Stanton 3/01/2003

Chairperson R.C.E. 19246 Date

DRAWING NUMBER **D-43C**

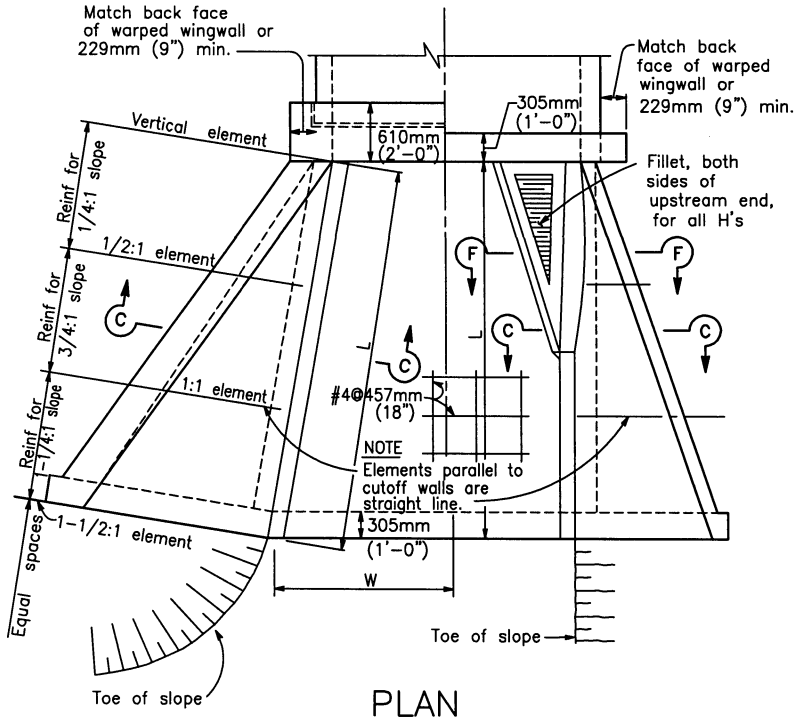

PLAN

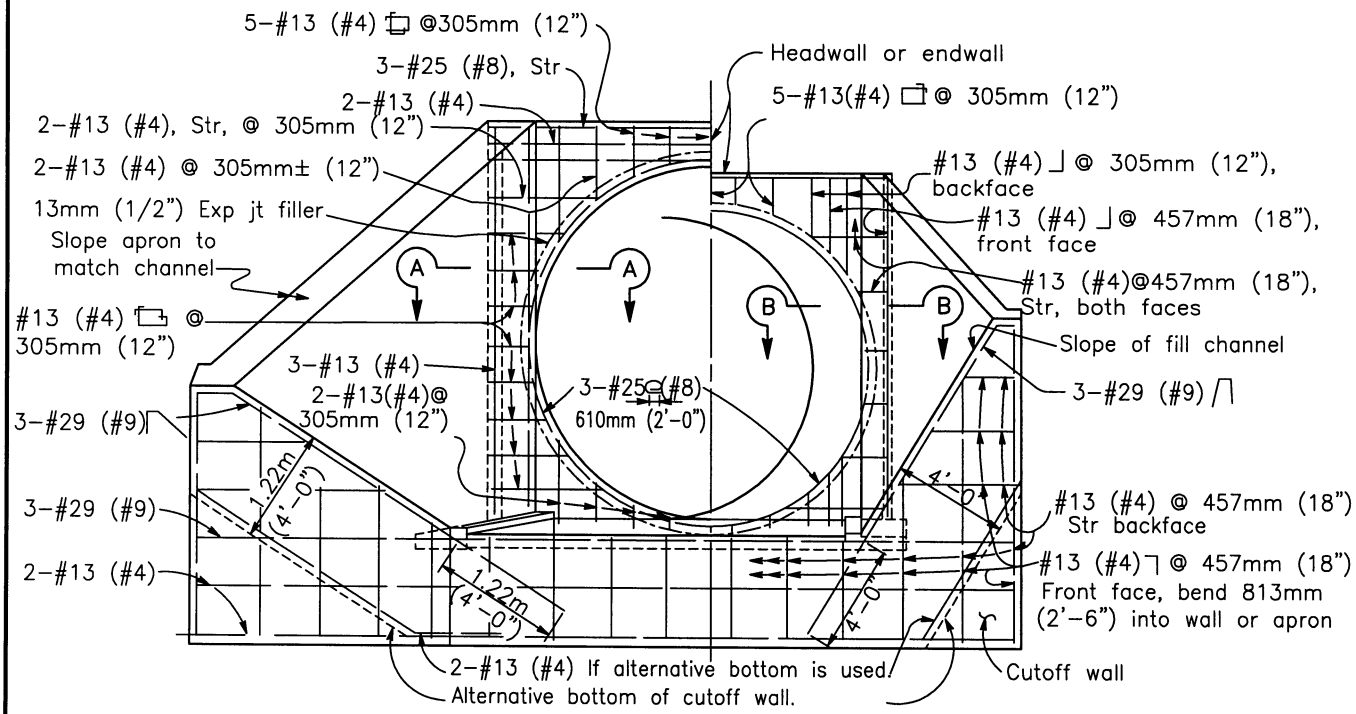

TYPICAL FOR MAXIMUM H >3.05m (10') TYPICAL FOR MAXIMUM H< 3.05m (10')

END ELEVATION

If at upstream end, fillet is not shown

Revision	By	Approved	Date
ORIGINAL		Kercheval	12/75
Add Metric		T. Stanton	03/03
Reformatted		T. Stanton	04/06

SAN DIEGO REGIONAL STANDARD DRAWING

PIPE CULVERT - HEADWALLS, ENDWALLS & WARPED WINGWALLS

RECOMMENDED BY THE SAN DIEGO REGIONAL STANDARDS COMMITTEE

T. Stanton 3/01/2003

Chairperson R.C.E. 19246 Date

DRAWING NUMBER **D-44A**

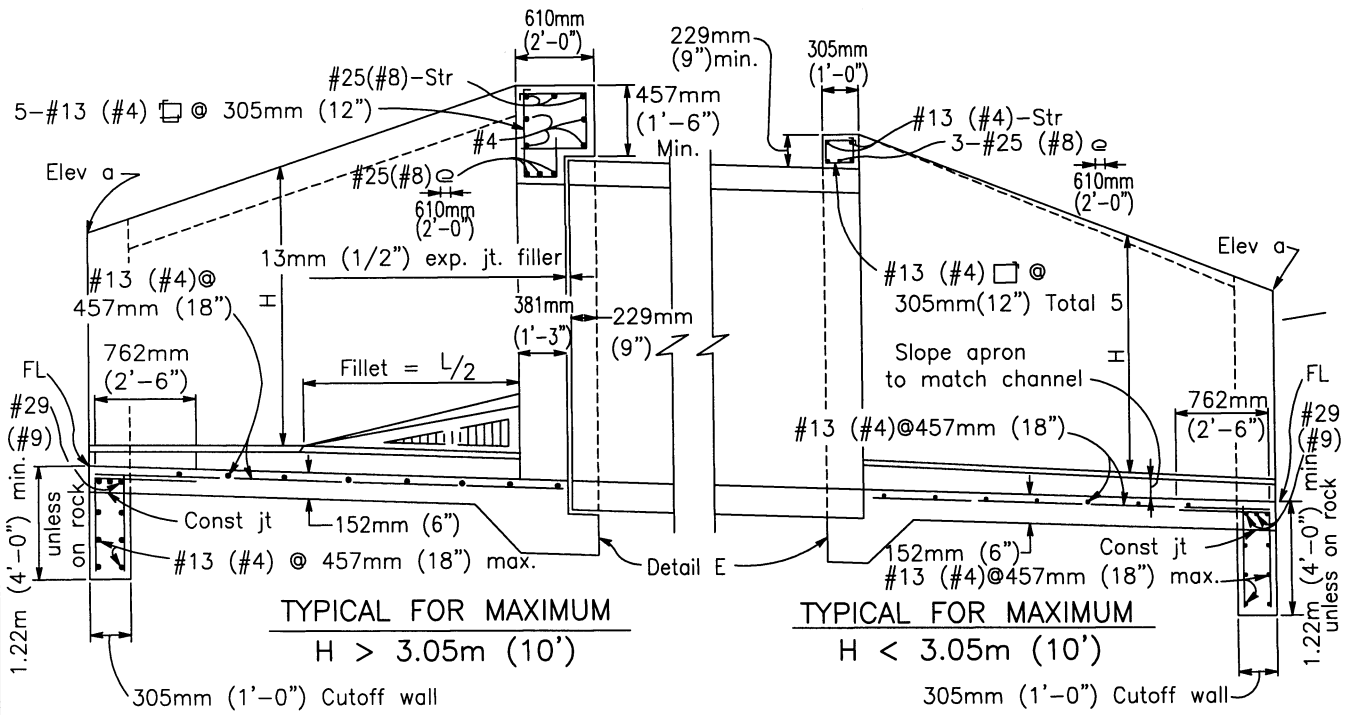

PART LONGITUDINAL SECTION

NOTE

RCP shown. Metal pipe similar except eliminate the expansion joint and use hook bolts @ 483mm(19")± spacing. Size and length provided by manufacturer.

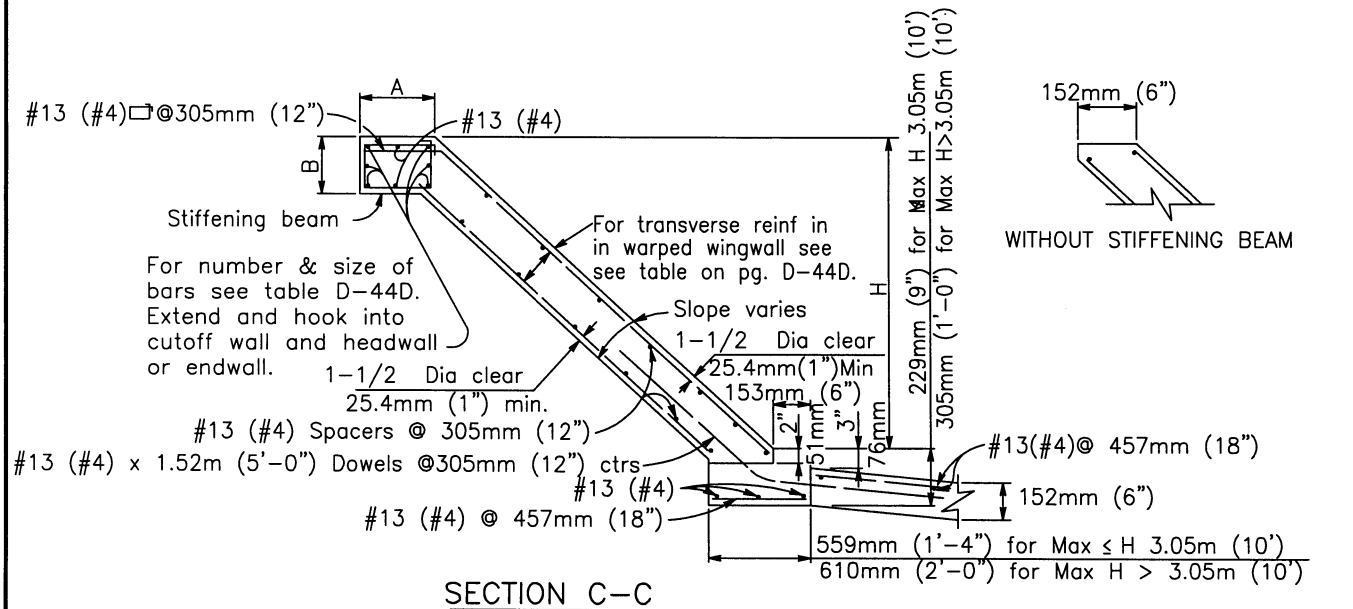

SECTION C-C

Where abrasion is anticipated, increase apron thickness to 178mm (7") minimum to provide 51mm (2") minimum reinforcement coverage.

Revision	By	Approved	Date
ORIGINAL		Kercheval	12/75
Add Metric		T. Stanton	03/03
Reformatted		T. Stanton	04/06

SAN DIEGO REGIONAL STANDARD DRAWING

PIPE CULVERT - HEADWALLS, ENDWALLS & WARPED WINGWALLS

RECOMMENDED BY THE SAN DIEGO REGIONAL STANDARDS COMMITTEE

T. Stanton 3/01/2003

Chairperson R.C.E. 19246 Date

DRAWING NUMBER **D-44B**

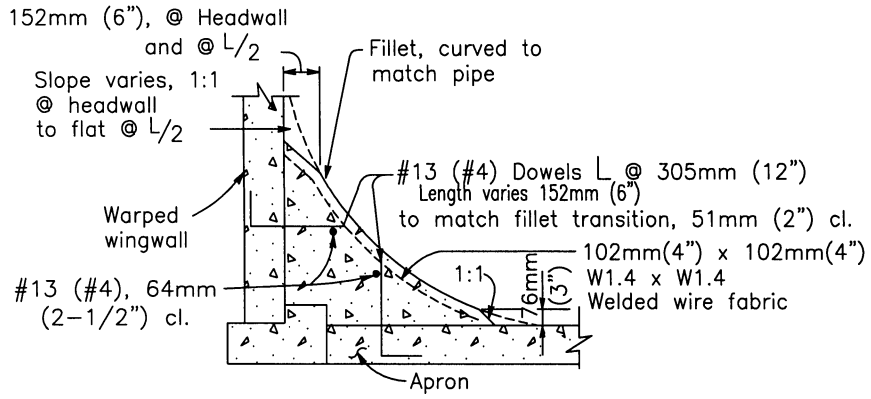

SECTION F-F

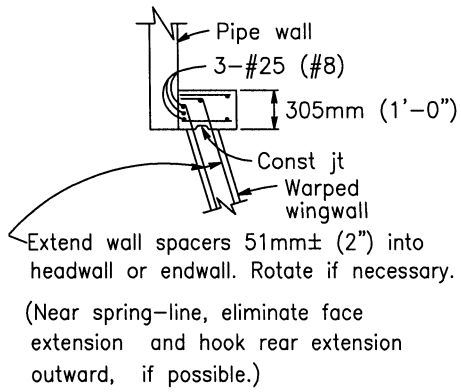

SECTION B-B

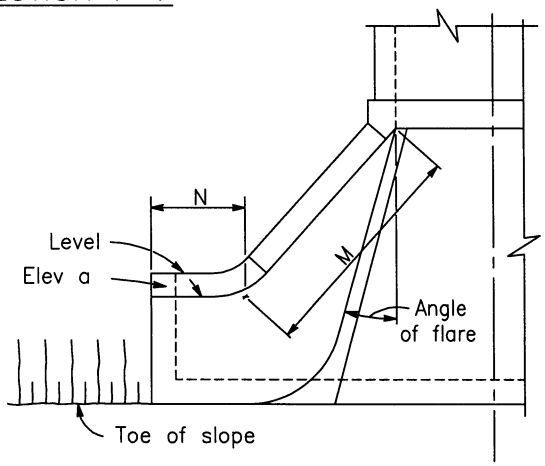

ALTERNATIVE WARPED WINGWALL

Use where additional protection to toe of embankment is required. If at upstream end, fillet is not shown.

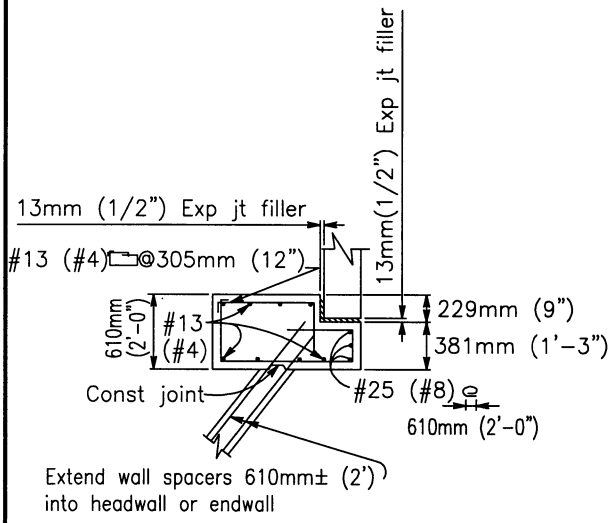

SECTION A-A

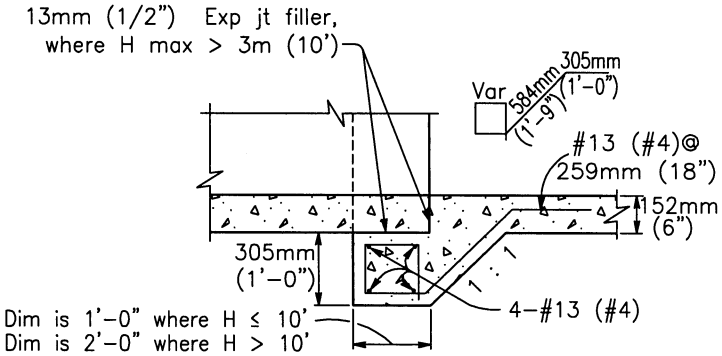

DETAIL E

Revision	By	Approved	Date
ORIGINAL		Kercheval	12/75
Add Metric		T. Stanton	03/03
Reformatted		T. Stanton	04/06

SAN DIEGO REGIONAL STANDARD DRAWING

PIPE CULVERT - HEADWALLS, ENDWALLS & WARPED WINGWALLS

RECOMMENDED BY THE SAN DIEGO REGIONAL STANDARDS COMMITTEE

T. Stanton 3/10/2003

Chairperson R.C.E. 19246 Date

DRAWING NUMBER **D-44C**

WARPED WINGWALLS – IMPERIAL (All measurements in Feet and/or Inches unless otherwise noted)

WALL DIMENSIONS AND REINFORCING

Element Slope	H	8'or less	10'	12'	14'	16'	18'	20'
1/4:1	Front face reinf	#4@12	#4@ 7	#5@ 7	#5@ 5	#6@ 6	#7@ 7	#7@ 6
	Rear face reinf	#4@12	#4@12	#4@12	#4@12	#4@12	#4@12	#4@12
3/4:1	Front face reinf	#4@12	#4@12	#4@12	#4@12	#4@10	#4@ 8	#4@ 6
	Rear face reinf	#4@12	#4@12	#4@12	#4@10	#4@ 7	#4@ 6	#5@ 8
1–1/4:1	Front face reinf	#4@12	#4@12	#4@12	#4@12	#4@12	#4@12	#4@12
	Rear face reinf	#4@ 8	#4@ 8	#4@ 5	#5@ 6	#6@ 7	#6@ 6	#7@ 6
D at Cutoff Wall		6"	6"	6"	7–1/2"	8"	9–1/2"	11"
D at Culvert		6"	6"	6"	8"	9–1/2"	11"	1'–1"

STIFFENING BEAM DIMENSIONS AND REINFORCING

H max \ L	12'	14'	16'	18'	20'	25'	30'	35'	40' or more
6'	No beam. Place 2–#6 in each face along top of wall.								
8'									
10'				A= 1'–0"					
12'				B= 9"					
14'			Total 6–#6			A= 1'–6"			
16'					B= 1'–0"			A= 1'–10"	
18'				Total 6–#7			B=1'–0"		A=2'–0"
20'						Total 6–#8		B= 1'–6"	
							Total 8–#9		

WARPED WINGWALLS – METRIC (All measurements in Millimeters unless otherwise noted)

WALL DIMENSIONS AND REINFORCING

Element Slope	H	2.44m or less	3.05m	3.66m	4.27	4.88m	5.59m	6.10m
1/4:1	Front face reinf	#13@305	#13@178	#16@178	#16@127	#19@152	#22@178	#22@152
	Rear face reinf	#13@305	#13@305	#13@305	#13@305	#13@305	#13@305	#13@305
3/4:1	Front face reinf	#13@305	#13@305	#13@305	#13@305	#13@254	#13@203	#13@152
	Rear face reinf	#13@305	#13@305	#13@305	#13@254	#13@178	#13@152	#16@203
1–1/4:1	Front face reinf	#13@305	#13@305	#13@305	#13@305	#13@305	#13@305	#13@305
	Rear face reinf	#13@203	#13@203	#13@127	#16@152	#19@178	#19@152	#22@152
D at Cutoff Wall		152	152	152	191	203	241	279mm
D at Culvert		152	152	152	203	241	279	330

STIFFENING BEAM DIMENSIONS AND REINFORCING

H max \ L	3.66m	3.27m	4.88m	5.49m	6.10m	7.62m	9.14m	10.7m	12m or more
1.83m	No beam. Place 2–#13 in each face along top of wall.								
2.43m									
3.05m				A= 305					
3.66m				B= 229					
4.27m			Total 6–#19			A= 457			
4.88m					B= 305			A= 559	
5.49m				Total 6–#22			B=305		A=610
6.10m						Total 6–#25		B= 457	
							Total 8–#29		

NOTES:

Walls designed for 610mm (2') surcharge; earth density = 55kg / 0.029 cu m (120 # / cu. ft.); equivalent fluid pressure = 16.4kg / cu m (36 #/cu. ft.) Vary D of warped wall uniformly from that at cutoff wall to that at culvert, for maximum H > 3.65m (12'). Dimensions L, W, H, M.

Revision	By	Approved	Date
ORIGINAL		Kercheval	12/75
Add Metric		T. Stanton	03/03
Reformatted	T. Stanton	T. Stanton	04/06

SAN DIEGO REGIONAL STANDARD DRAWING

PIPE CULVERT - HEADWALLS, ENDWALLS & WARPED WINGWALLS

RECOMMENDED BY THE SAN DIEGO REGIONAL STANDARDS COMMITTEE

Chairperson R.C.E. 19246 Date 3/01/2003

DRAWING NUMBER D-44D

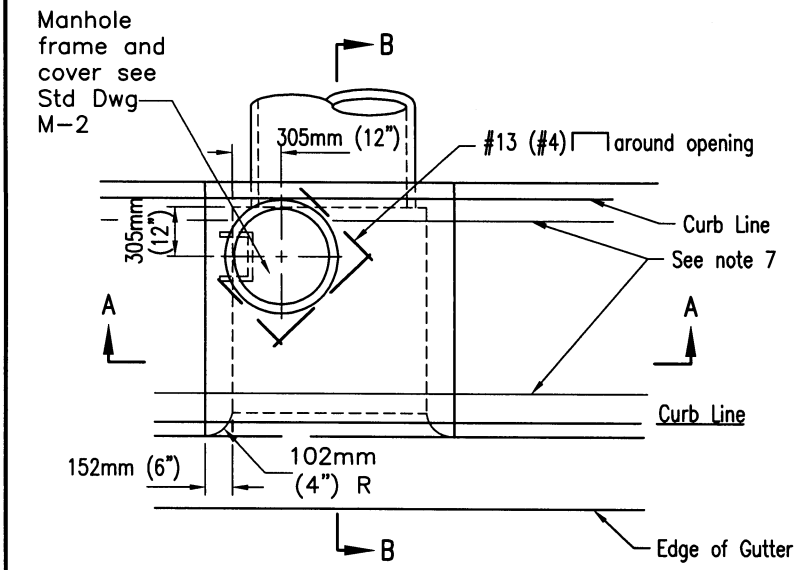

PLAN

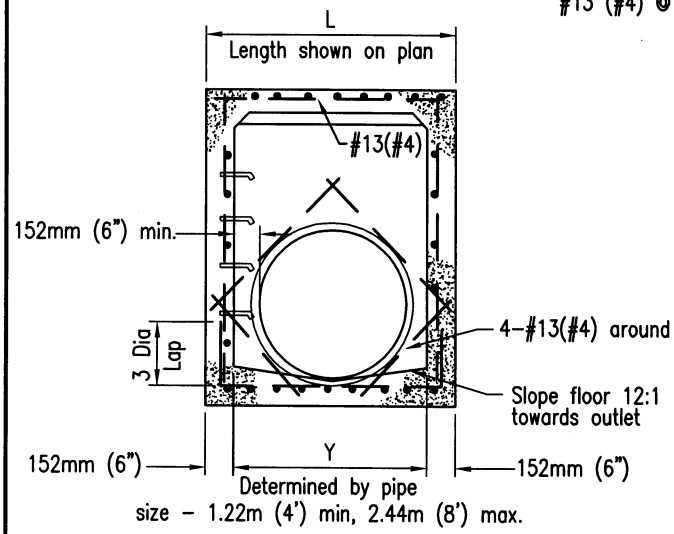

SECTION A-A

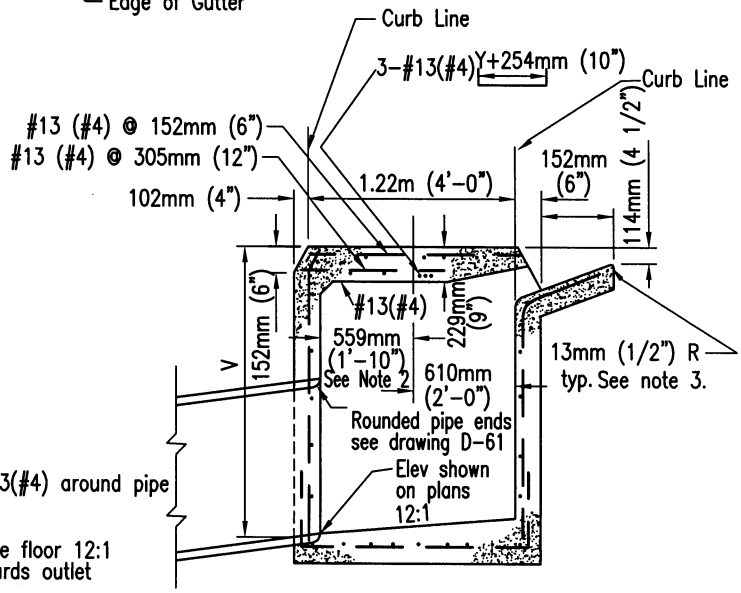

SECTION B-B

NOTES

1. See Standard Drawings D-11 & D-12 for additional notes and details.
2. Dimension shown becomes 610mm (2'-0") when opening on both sides. Adjust manhole as required.
3. Exposed edges of concrete shall be rounded with a radius of 13mm (1/2")
4. When V exceeds 1.22m (4') steps shall be installed. See Standard Drawing D-11 for details.
5. Concrete gutter to match adjacent gutters.
6. An expansion joint shall be placed at the ends of the inlet where the curb is to adjoin.
7. Provide 6.35mm (1/4") tooled groove in top slab in line with back of adjacent curb.
8. Maintain 38mm (1 1/2") clear spacing between reinforcing and surface unless otherwise noted.

LEGEND ON PLANS

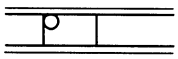

Revision	By	Approved	Date
ORIGINAL		H. Hecht	10/82
Add Metric		T. Stanton	03/03
Reformatted		T. Stanton	04/06

SAN DIEGO REGIONAL STANDARD DRAWING

MEDIAN CURB INLET - TYPE J

RECOMMENDED BY THE SAN DIEGO REGIONAL STANDARDS COMMITTEE

T. Stanton 3/01/2003

Chairperson R.C.E. 19246 Date

DRAWING NUMBER **D-45**

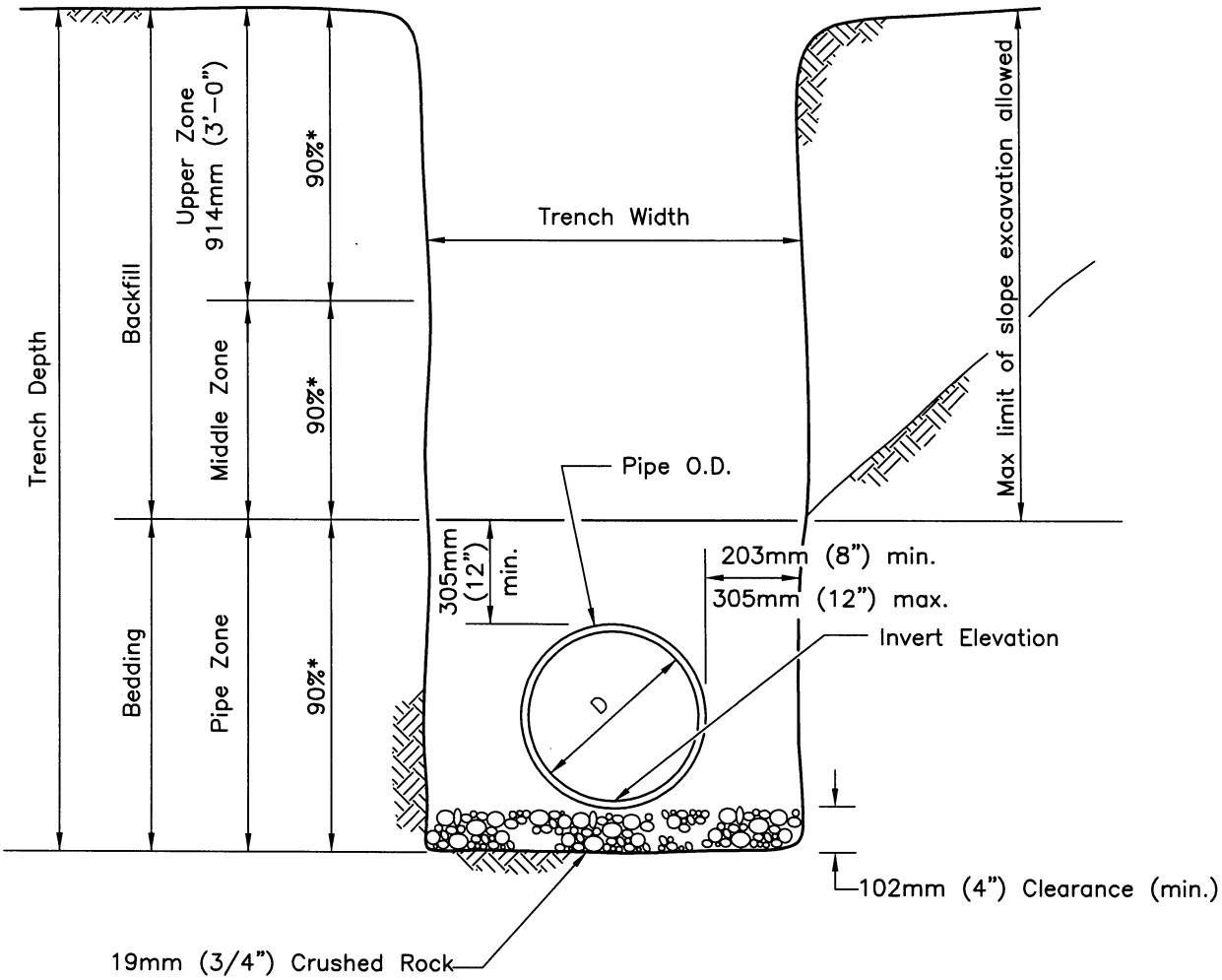

SECTION

NOTES:

1. For trenching on improved streets see Standard Drawing G-24 or G-25 for resurfacing details.
2. (*) indicates minimum relative compaction.

Revision	By	Approved	Date
ORIGINAL		Parkinson	2/95
Add Metric		T. Stanton	03/03
Reformatted		T. Stanton	04/06

SAN DIEGO REGIONAL STANDARD DRAWING

PIPE BEDDING AND TRENCH BACKFILL FOR STORM DRAINS

RECOMMENDED BY THE SAN DIEGO REGIONAL STANDARDS COMMITTEE

T. Stanton 3/01/2003

Chairperson R.C.E. 19246 Date

DRAWING NUMBER **D-60**

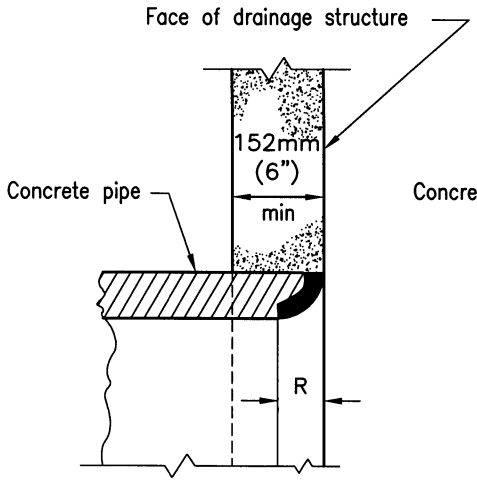

BELL END

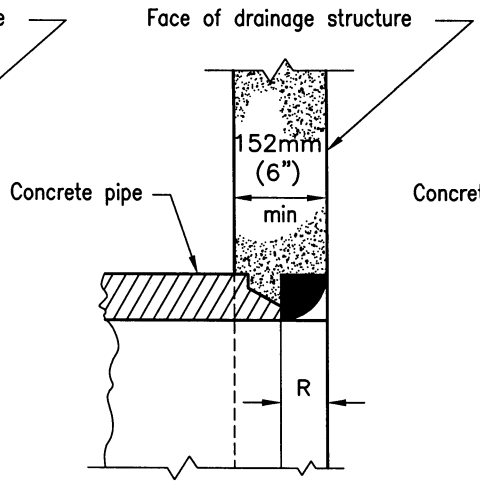

SPIGOT END

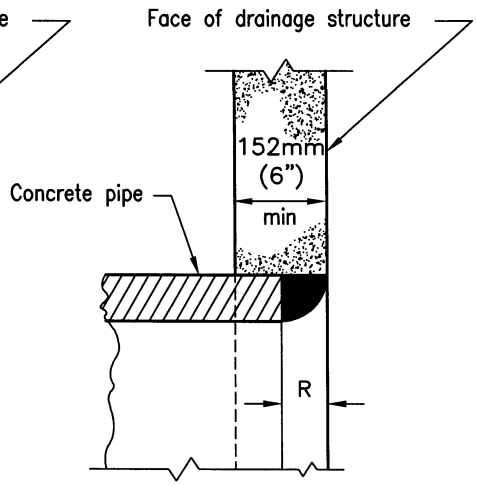

CUT END

R = Thickness of pipe

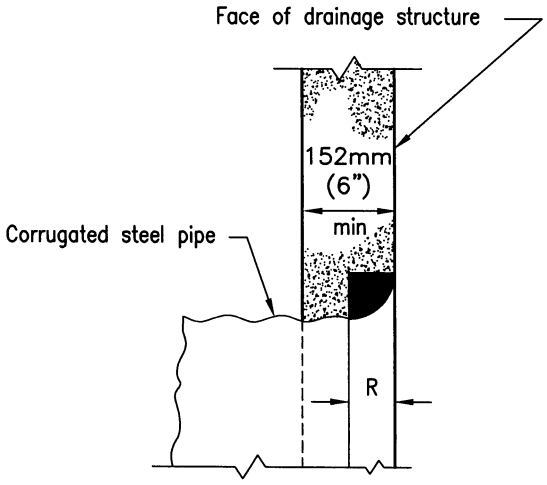

CUT END

$$R = \frac{\text{Inside diameter of pipe}}{10}$$

NOTE

The rounded areas may be built up of cement mortar or poured in place with the drainage structure.

Revision	By	Approved	Date
ORIGINAL		Kercheval	12/75
Add Metric		T. Stanton	03/03
Reviewed		T. Stanton	04/06

SAN DIEGO REGIONAL STANDARD DRAWING

ROUNDED PIPE ENDS IN DRAINAGE STRUCTURES

RECOMMENDED BY THE SAN DIEGO REGIONAL STANDARDS COMMITTEE

T. Stanton 3/01/2003

Chairperson R.C.E. 19246 Date

DRAWING NUMBER **D-61**

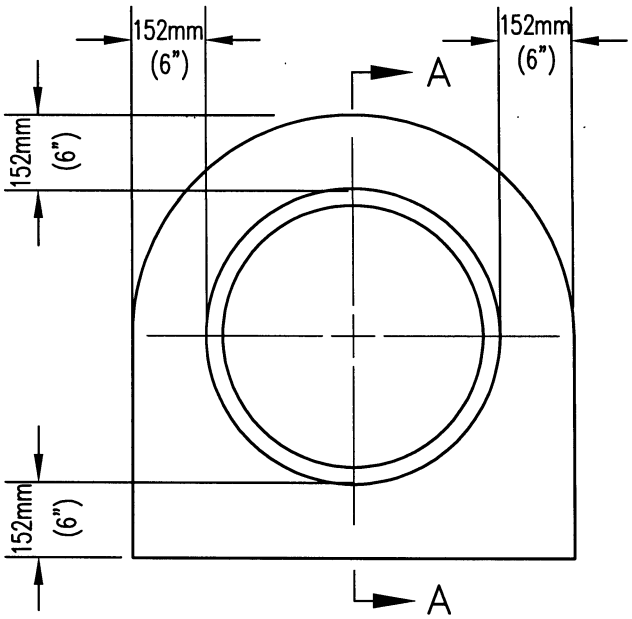

ELEVATION

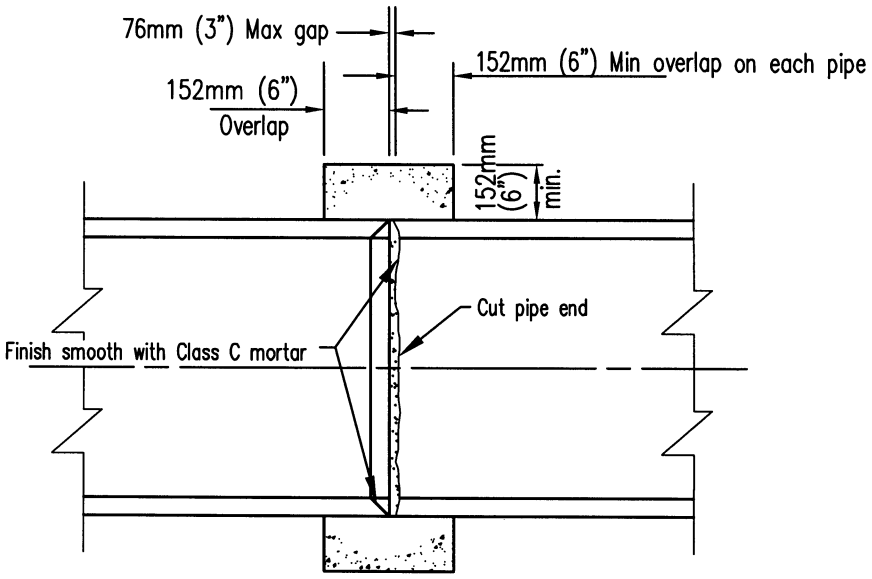

SECTION A–A

NOTES

1. Pipe collar does not have to be finished if covered.
2. Concrete shall be 332 kg/M^3 –C–22Mpa (560–C–3250)
3. Where gap exceeds 76mm (3") but is not more than 152mm (6") an internal form shall be used.

LEGEND ON PLANS

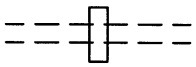

Revision	By	Approved	Date
ORIGINAL		Kercheval	12/75
Add Metric		T. Stanton	03/03
Reviewed		T. Stanton	04/06

SAN DIEGO REGIONAL STANDARD DRAWING

PIPE COLLAR

RECOMMENDED BY THE SAN DIEGO REGIONAL STANDARDS COMMITTEE

T. Stanton 3/01/2003

Chairperson R.C.E. 19246 Date

DRAWING NUMBER **D-62**

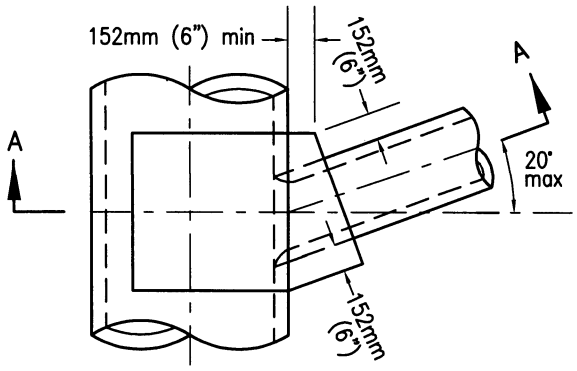

PLAN
SKEWED CONNECTION

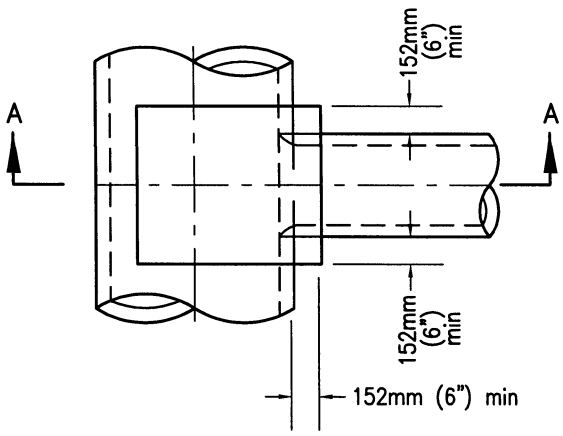

PLAN

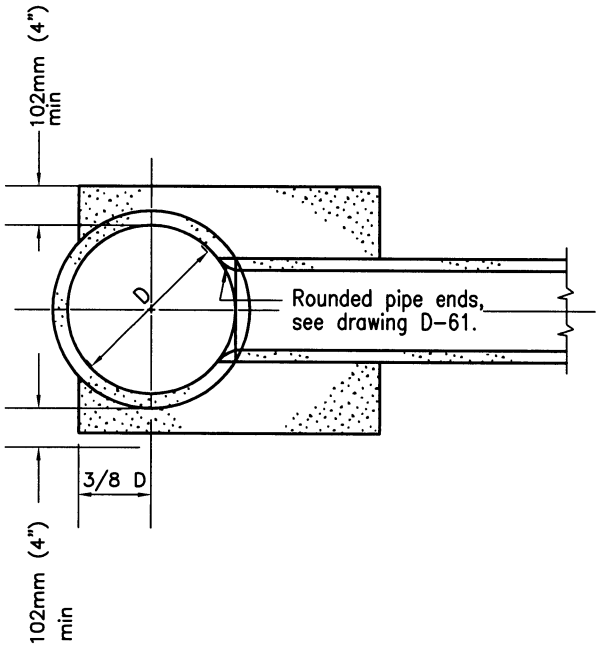

SECTION A–A

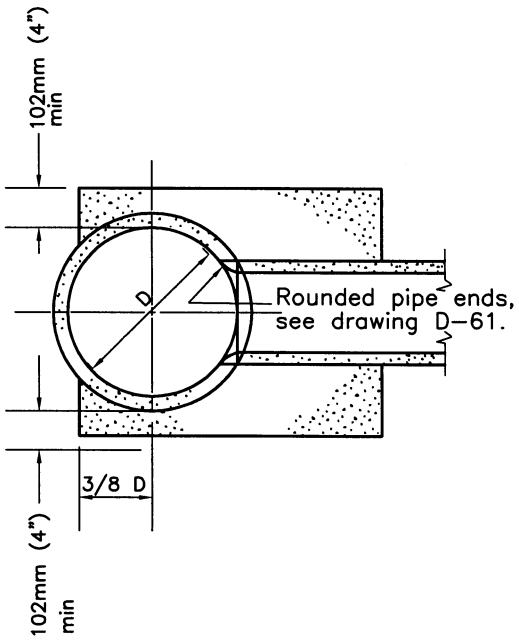

SECTION B–B

NOTES

1. The end of connecting pipe shall not project into the waterway of the larger pipe.
2. The larger pipe shall not be less than 610mm (24") ID.
3. The smaller pipe shall not be more than 2/3 the size of the larger pipe.
4. Concrete shall be 279kg/M^3 –C–14–Mpa (470–C–2000).

LEGEND ON PLANS

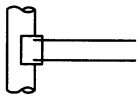

Revision	By	Approved	Date
ORIGINAL		Kercheval	12/75
Add Metric		T. Stanton	03/03
Reviewed		T. Stanton	04/06

SAN DIEGO REGIONAL STANDARD DRAWING

CONCRETE LUG

RECOMMENDED BY THE SAN DIEGO REGIONAL STANDARDS COMMITTEE

T. Stanton 3/10/2003

Chairperson R.C.E. 19246 Date

DRAWING NUMBER **D-63**

SEE SDD-100

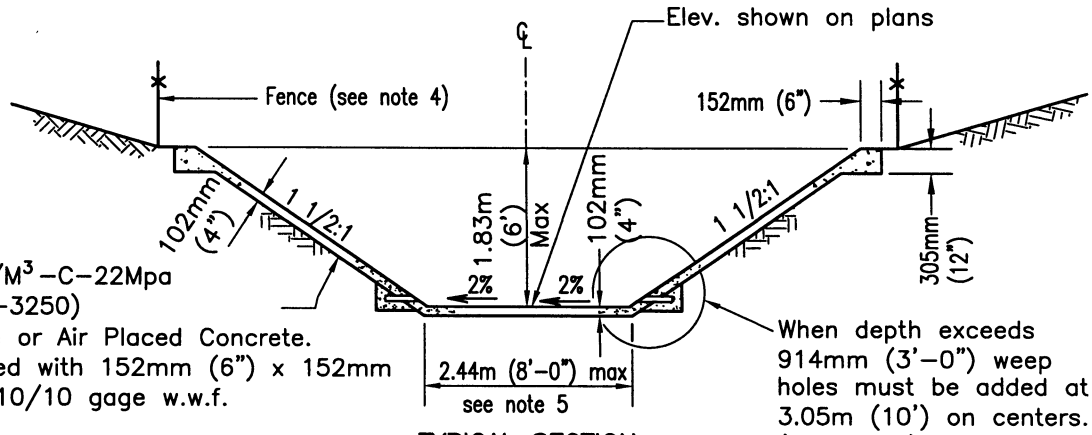

TYPICAL SECTION

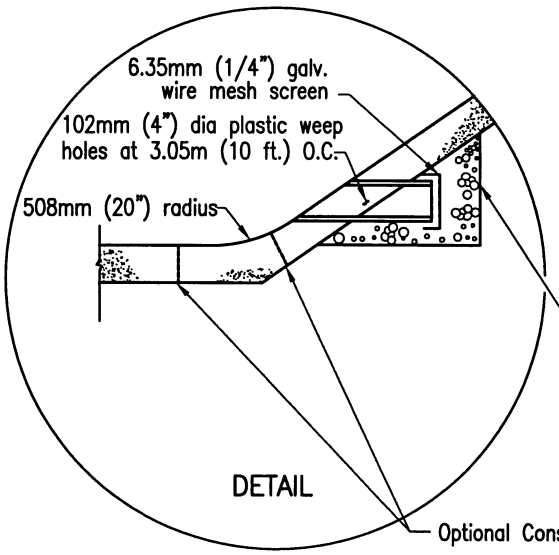

DETAIL

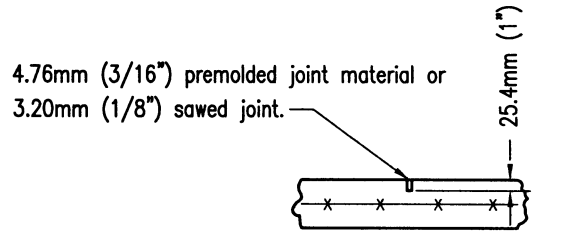

WEAKENED PLANE JOINT

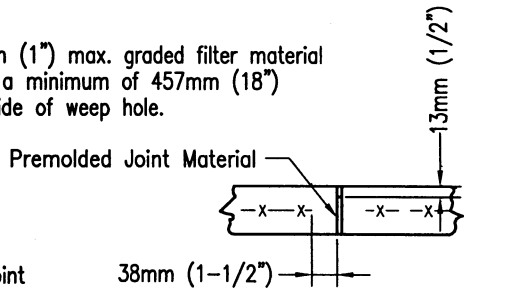

EXPANSION JOINT

NOTES

1. A.C. or clay pipe may be substituted for plastic pipe at weep holes.
2. Weakened plane joints shall be placed every 3.66m (12') to 4.57m (15'). Expansion joints shall be placed at all changes of section and at ends of curves.
3. Cutoff walls shall be constructed at each end of the channel along the full width of section. See Standard Drawing D–72.
4. Chainlink fence shall be as required by Agency.
5. For bottom widths greater than 2.44m (8 feet) see Standard Drawing D–71.
6. Reinforcement shown is minimum.

LEGEND ON PLANS

Revision	By	Approved	Date
ORIGINAL		Kercheval	12/75
Add Metric		T. Stanton	03/03
Reformatted		T. Stanton	04/06

SAN DIEGO REGIONAL STANDARD DRAWING

MINOR DRAINAGE CHANNEL

RECOMMENDED BY THE SAN DIEGO REGIONAL STANDARDS COMMITTEE

T. Stanton 3/01/2003

Chairperson R.C.E. 19246 Date

DRAWING NUMBER **D-70**

SEE SDD-100

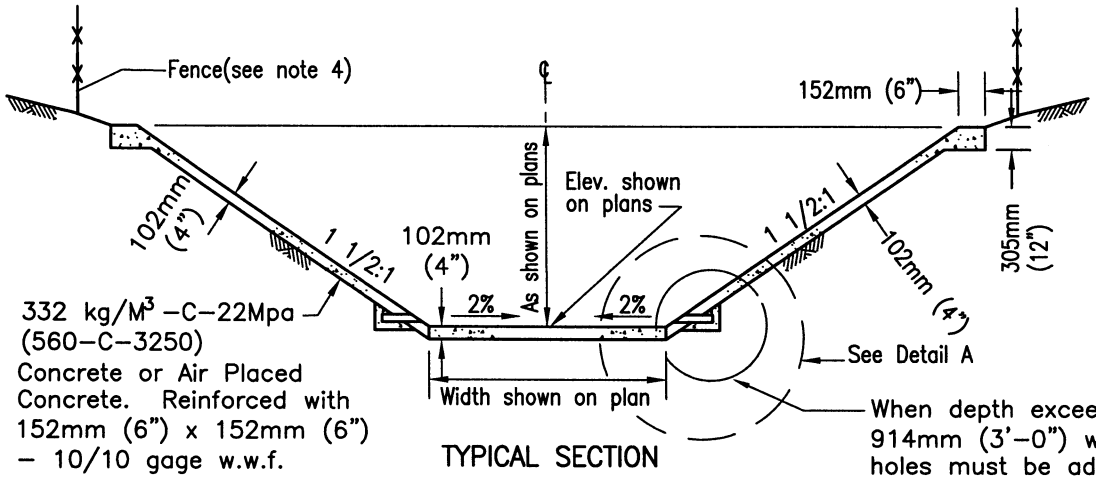

TYPICAL SECTION

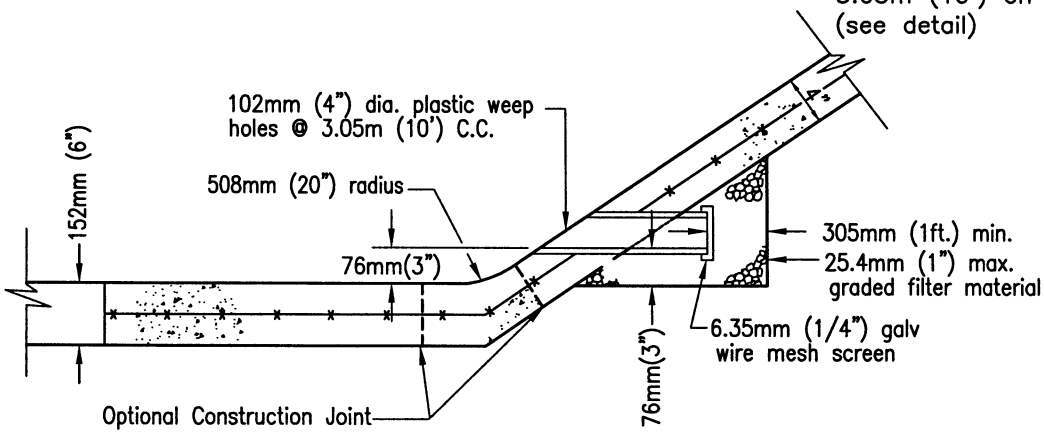

DETAIL A

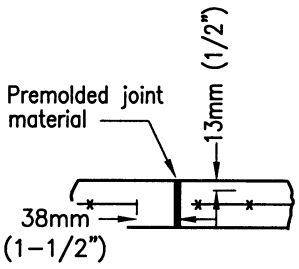

EXPANSION JOINT

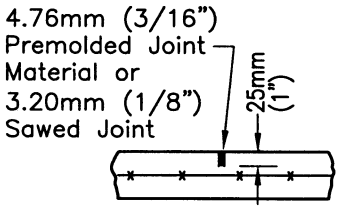

WEAKENED PLANE JOINT

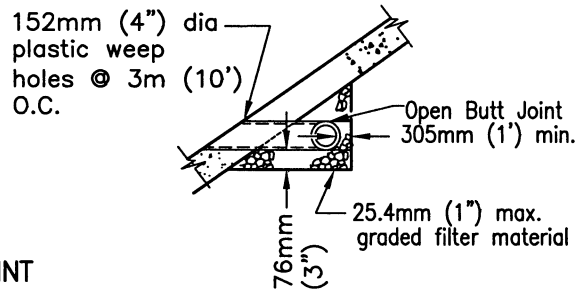

ALTERNATE CONTINUOUS DRAIN

NOTES

1. A.C. or clay pipe may be substituted for plastic pipe at weep holes.
2. Weakened plane joints shall be placed every 3.66m (12') to 4.57m (15'). Expansion joints shall be placed at all changes of section and at ends of curves.
3. Cutoff walls shall be constructed at each end of the channel along the full width of section. See Standard Drawing D–72.
4. Chainlink fence shall be as required by Agency.
5. Reinforcement shown is minimum.

LEGEND ON PLANS

Revision	By	Approved	Date
ORIGINAL		Kercheval	12/75
Add Metric		T. Stanton	03/03
Reviewed		T. Stanton	04/06

SAN DIEGO REGIONAL STANDARD DRAWING

MAJOR DRAINAGE CHANNEL

RECOMMENDED BY THE SAN DIEGO REGIONAL STANDARDS COMMITTEE

T. Stanton 3/01/2003

Chairperson R.C.E. 19246 Date

DRAWING NUMBER **D-71**

SEE SDD-100

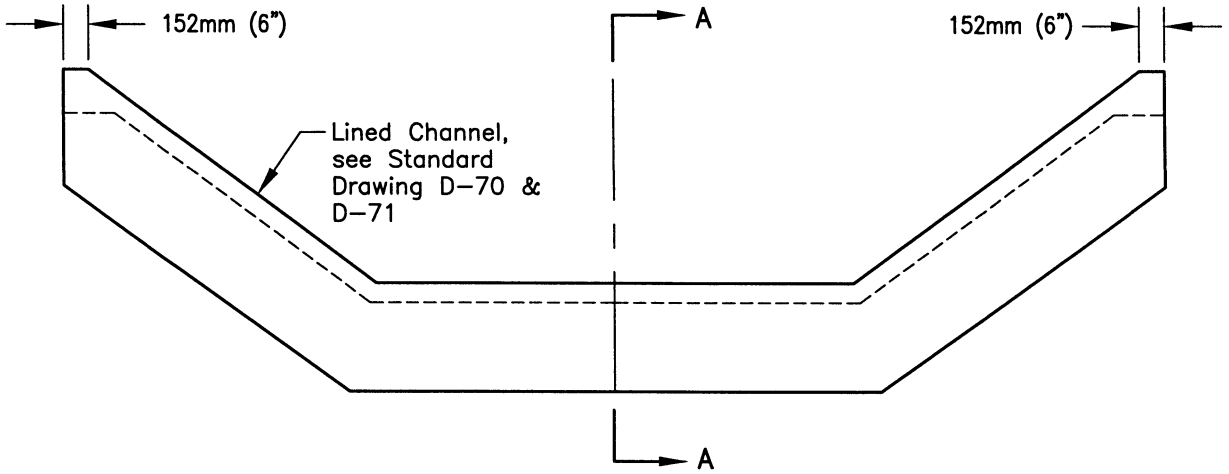

ELEVATION

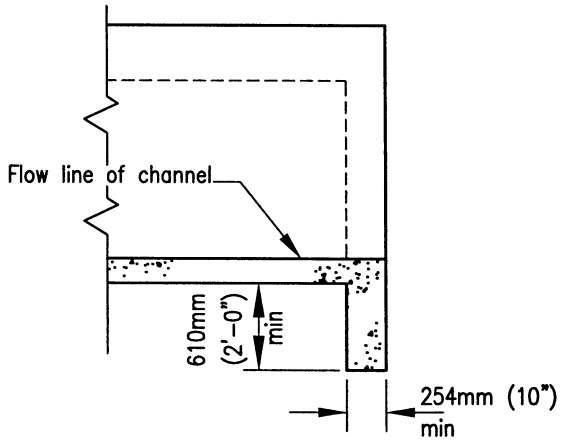

SECTION A–A

LEGEND ON PLANS

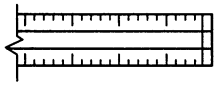

NOTES

1. Thickness and wall depth shall be as shown on plan.
2. Reinforcing in cut off wall shall be the same as that required in channel.
3. Concrete shall be 332 kg/M^3 –C–22Mpa (560–C–3250).

Revision	By	Approved	Date
ORIGINAL		Kercheval	12/75
Add Metric		T. Stanton	03/03
Reviewed		T. Stanton	04/06

SAN DIEGO REGIONAL STANDARD DRAWING

CUTOFF WALL FOR DRAINAGE CHANNEL

RECOMMENDED BY THE SAN DIEGO REGIONAL STANDARDS COMMITTEE

T. Stanton 3/01/2003

Chairperson R.C.E. 19246 Date

DRAWING NUMBER **D-72**

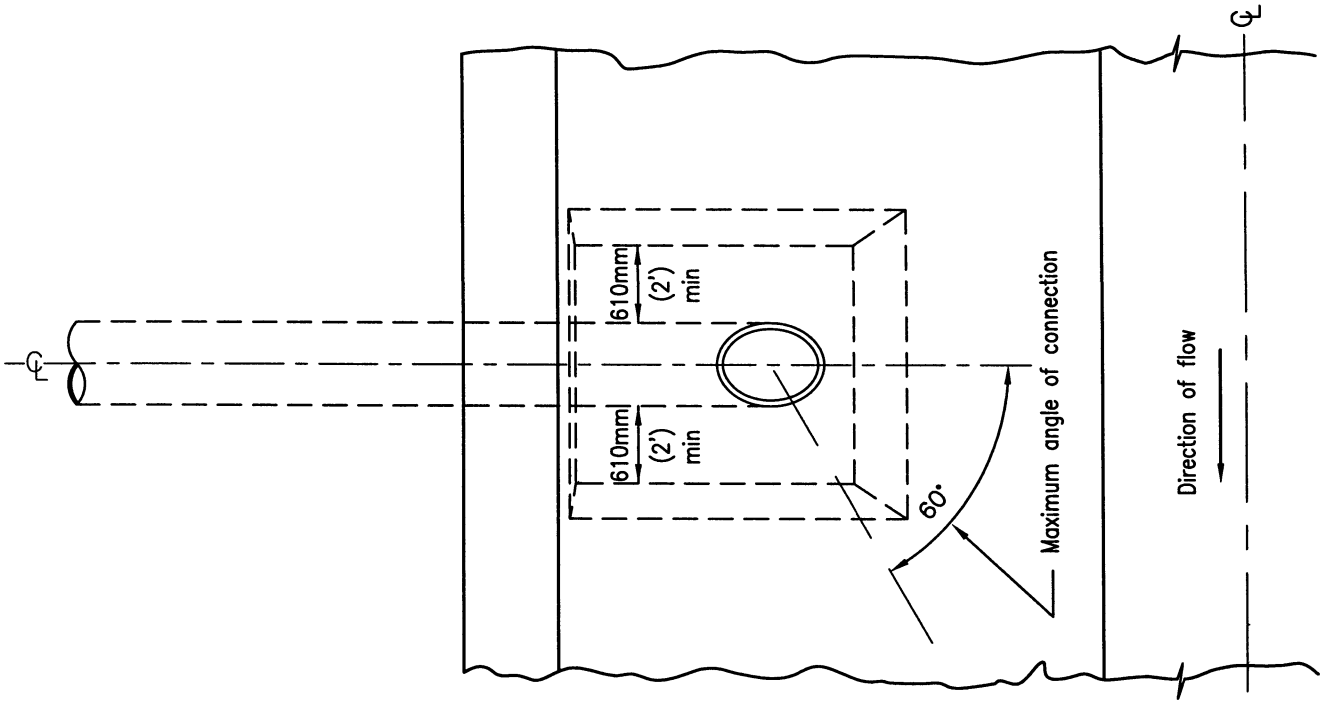

PLAN

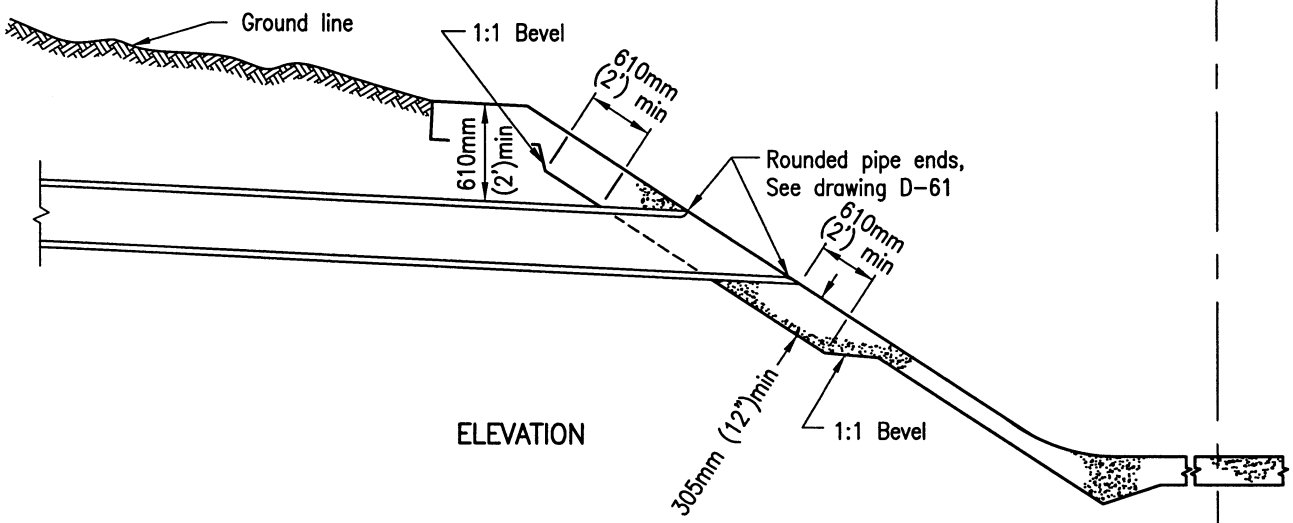

ELEVATION

NOTES:

1. Concrete shall be 332 kg/M^3 –C–22Mpa (560–C–3250).
2. Pipe shall connect to channel as high as possible.
3. The maximum angle of connection is 60° downstream. In no case shall a pipe angle upstream.

LEGEND ON PLANS

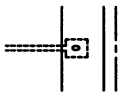

Revision	By	Approved	Date
ORIGINAL		Kercheval	12/75
Add Metric		T. Stanton	03/03
Reviewed		T. Stanton	04/06

SAN DIEGO REGIONAL STANDARD DRAWING

PIPE TO CHANNEL CONNECTION

RECOMMENDED BY THE SAN DIEGO REGIONAL STANDARDS COMMITTEE

T. Stanton 3/01/2003

Chairperson R.C.E. 19246 Date

DRAWING NUMBER **D-73**

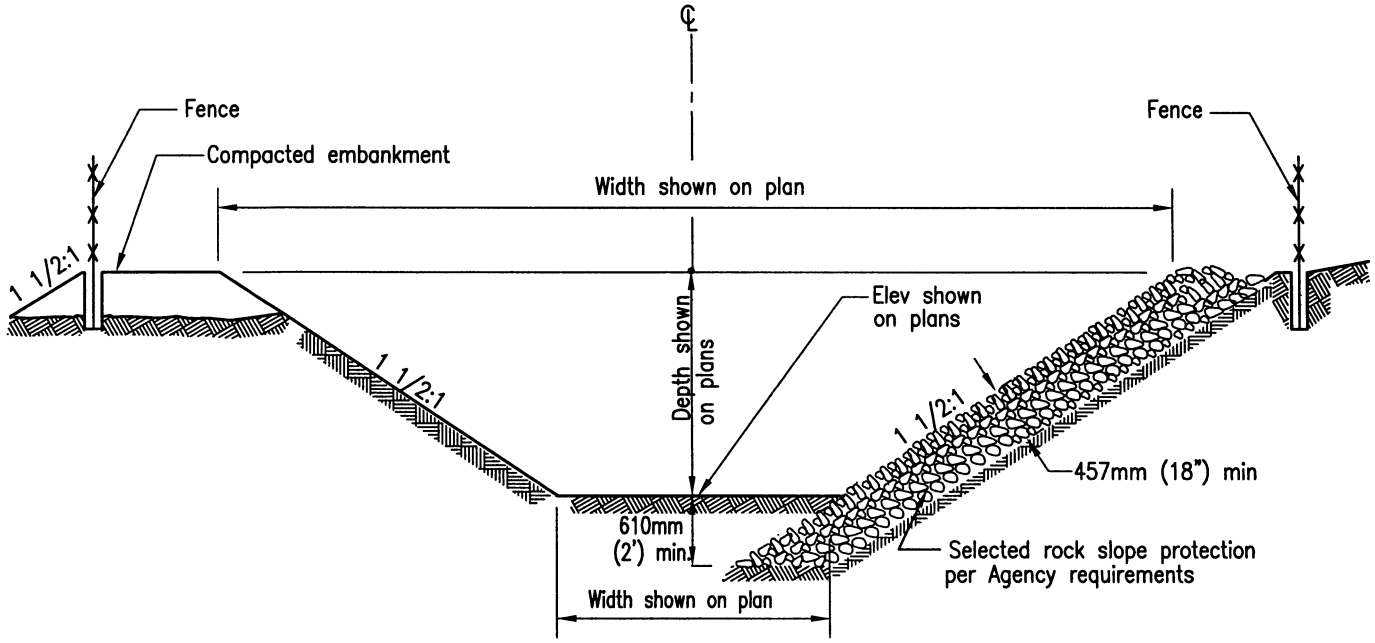

SECTION

NOTE:

The following shall be as required by Agency:

a) Low flow channel
b) Filter blanket
c) Cutoff wall
d) Fence

LEGEND ON PLANS

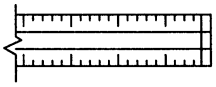

Revision	By	Approved	Date
ORIGINAL		Kercheval	12/75
Add Metric		T. Stanton	03/03
Reviewed		T. Stanton	04/06

SAN DIEGO REGIONAL STANDARD DRAWING

GRADED EARTH CHANNEL

RECOMMENDED BY THE SAN DIEGO REGIONAL STANDARDS COMMITTEE

T. Stanton 3/01/2003

Chairperson R.C.E. 19246 Date

DRAWING NUMBER **D-74**

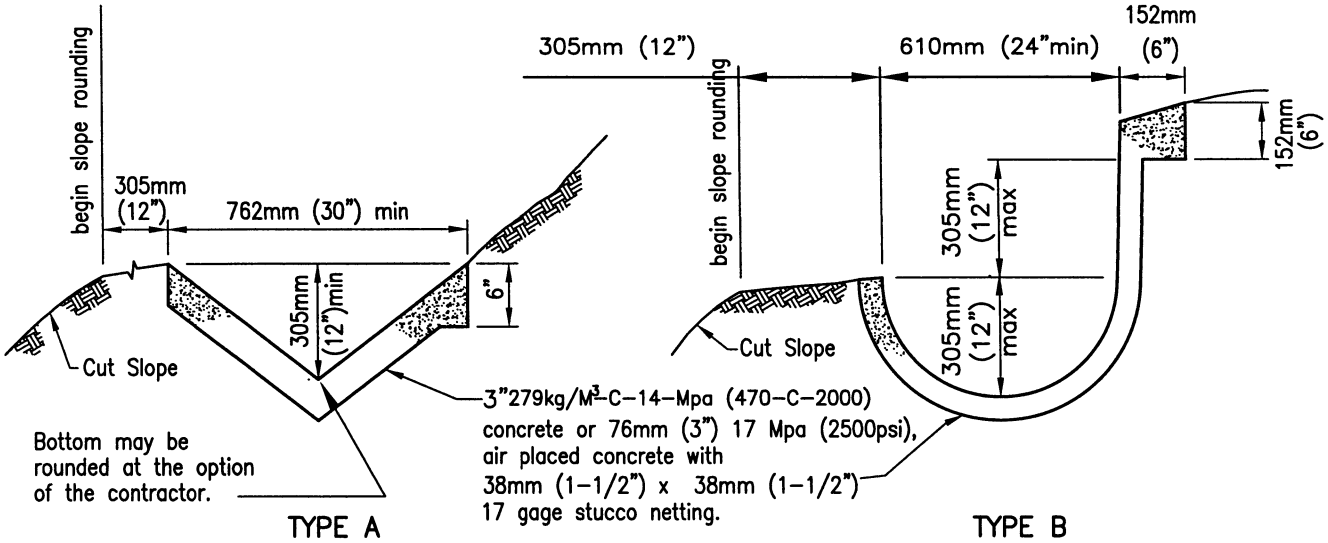

BROW DITCH

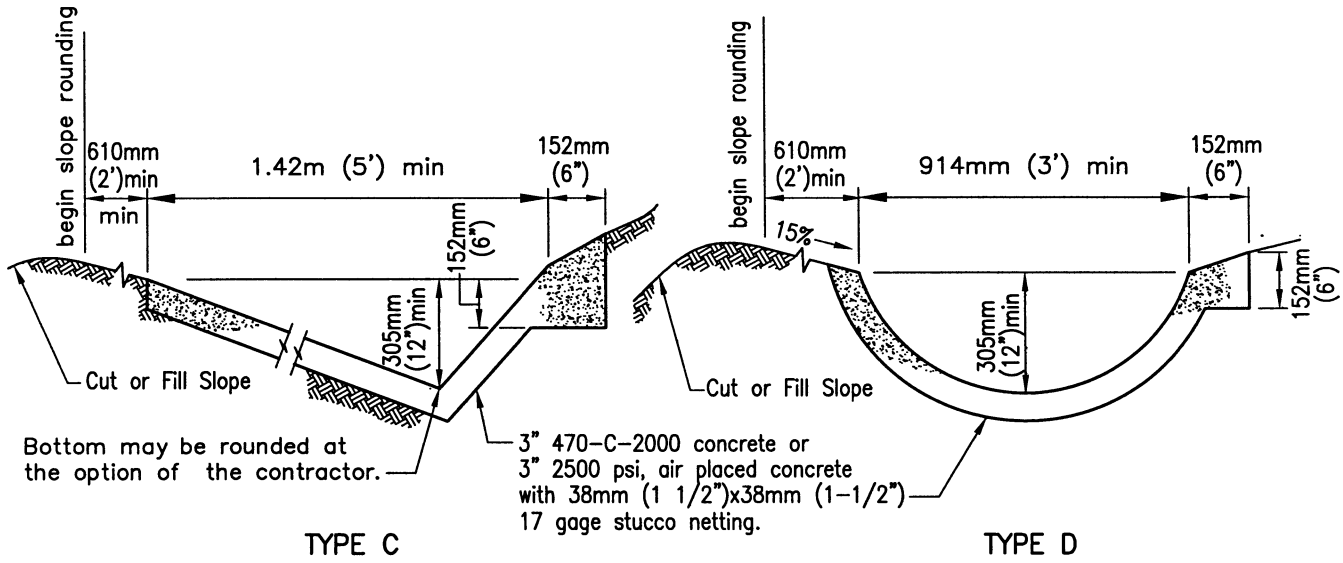

TERRACE DITCH

NOTES

1. Longitudinal slope of lined ditch shall be 2% minimum.
2. Over slope down ditches shall employ 152mm (6") thickened edge section at both sides of ditch.

LEGEND ON PLANS

Revision	By	Approved	Date
ORIGINAL		Kercheval	12/75
Add Metric		T. Stanton	03/03
Reviewed		T. Stanton	04/06

SAN DIEGO REGIONAL STANDARD DRAWING

DRAINAGE DITCHES

RECOMMENDED BY THE SAN DIEGO REGIONAL STANDARDS COMMITTEE

T. Stanton 3/10/2003

Chairperson R.C.E. 19246 Date

DRAWING NUMBER **D-75**

SEE SDD-100

METRIC TABLE – SPANS UP TO 1.22M (all measuements in millimeters unless otherwise noted).

SPAN			610		914			1.22m						1.52m											
HEIGHT			457	610	610	914		610	914		1.22m			610		914		1.22m				1.52m			
STRENGTH CLASSIFICATION			A	A	A	A	B	A	A	B	A	B	C	A	B	A	B	A	B	C	D	A	B	C	D
MAX FILL OVER TOP			1.68m		965	965	1.68m	711	711	940	711	940	1.27m	305	686	305	686	279	660	889	1.17m	279	635	889	1.17m
CONC.	Top Slab	T_1	152	152	159	159	203	178	178	203	178	203	229	191	203	191	203	191	203	241	267	191	203	241	267
CONC.	Bottom Slab	T_2	152	152	159	159	203	178	178	203	178	203	229	152	203	152	203	152	203	254	273	152	203	254	273
CONC.	Sidewalls	T_3	152	152	152	152	152	152	152	152	152	152	152	152	152	152	152	152	152	152	152	152	152	152	152
Reinforcing Steel	"a"	Size Bar "	13	13	13	13	16	16	16	16	16	16	19	16	16	16	16	16	16	19	19	16	16	19	19
Reinforcing Steel	"a"	Spacing	89	89	89	89	102	127	127	114	127	114	127	102	102	102	102	102	102	127	114	102	102	127	114
Reinforcing Steel	"a"	Length	965	965	1.27m	1.27m	1.3m	1.6m	1.6m	1.6m	1.6m	1.6m	1.57m	1.9m	1.9m	1.9m	1.9m	1.9m	1.9m	1.88m	1.88m	1.9m	1.9m	1.88m	1.88m
Reinforcing Steel	"d" Dist. Bars	Top Slab–No. of	2	2	3	3	2	3	5	3	3	3	3	7	3	7	3	7	3		3	7	3		3
Reinforcing Steel	"d" Dist. Bars	Bottom Slab–No. of	2	2	2	2	2	3	3		3		3	3		3		3			3	3	3		3
Reinforcing Steel	"e" Bars	Spacing	457	457	457	457	311	457	457	457	432	330	241	457	457	457	457	457	432	330	279	457	305	216	165
Reinforcing Steel	Spacers	Number	12	12	12	12		12	12		14			14		14		14				16			
QUAN.	Concrete: cubic meter per lin. ft.		13	13.8	17.6	20.7	23.7	22,2	25.3	27.6	27.6	30.6	32.9	24.5	28.3	27.6	31.2	30.6	33.7	39.0	41.3	32.9	34.5	42.1	43.6
QUAN.	Reinf. kg per lin. ft.		12.3	13.2	15.5	16.4	20.9	20.0	20.5	21.4	21.8	23.6	29.0	25.9	25.5	26.8	25.9	27.7	27.3	30.9	34.0	28.6	29.5	35.0	39.5

IMPERIAL TABLE – SPANS UP TO 5' (all measuements in feet and/or inches).

SPAN			2'		3'			4'						5'											
HEIGHT			1'-6"	2'	2'	3'		2'	3'		4'			2'		3'		4'				5'			
STRENGTH CLASSIFICATION			A	A	A	A	B	A	A	B	A	B	C	A	B	A	B	A	B	C	D	A	B	C	D
MAX FILL OVER TOP			66		38	38	66	28	28	37	28	37	50	12	27	12	27	11	26	35	46	11	25	35	46
CONC.	Top Slab	T_1	6	6	6 1/4	6 1/4	8	7	7	8	7	8	9	7 1/2	8	7 1/2	8	7 1/2	8	9 1/2	10 1/2	7 1/2	8	9 1/2	10 1/2
CONC.	Bottom Slab	T_2	6	6	6 1/4	6 1/4	8	7	7	8	7	8	9	6	8	6	8	6	8	10	10 3/4	6	8	10	10 3/4
CONC.	Sidewalls	T_3	6	6	6	6	6	6	6	6	6	6	6	6	6	6	6	6	6	6	6	6	6	6	6
Reinforcing Steel	"a"	Size Bar "	4	4	4	4	5	5	5	5	5	5	6	5	5	5	5	5	5	6	6	5	5	6	6
Reinforcing Steel	"a"	Spacing	3 1/2	3 1/2	3 1/2	3 1/2	4	5	5	4 1/2	5	4 1/2	5	4	4	4	4	4	4	5	4 1/2	4	4	5	4 1/2
Reinforcing Steel	"a"	Length	3–2	3–2	4–2	4–2	4–3	5–3	5–3	5–3	5–3	5–3	5–2	6–3	6–3	6–3	6–3	6–3	6–3	6–2	6–2	6–3	6–3	6–2	6–2
Reinforcing Steel	"d" Dist. Bars	Top Slab–No. of	2	2	3	3	2	3	5	3	3	3	3	7	3	7	3	7	3		3	7	3		3
Reinforcing Steel	"d" Dist. Bars	Bottom Slab–No. of	2	2	2	2	2	3	3		3		3	3		3		3			3	3	3		3
Reinforcing Steel	"e" Bars	Spacing	18	18	18	18	12 1/4	18	18	18	17	13	9 1/2	18	18	18	18	18	17	13	11	18	12	8 1/2	6 1/2
Reinforcing Steel	Spacers	Number	12	12	12	12		12	12		14			14		14		14				16			
QUAN.	Concrete: C.Y. per lin. ft.		17	18	23	27	31	29	33	36	36	40	43	32	37	36	41	40	44	51	54	43	48	55	57
QUAN.	Reinf. lbs per lin. ft.		27	29	34	36	46	44	45	47	48	52	64	57	56	59	57	61	60	68	75	63	65	77	87

NOTE:
For boxes of height less than that shown in table, use next greater table height slabs, wall dimensions and reinforcing steel, and make necessary changes in bar lengths, number of spacers and quantities.

Revision	By	Approved	Date
ORIGINAL		A.Kercheval	12/75
Add Metric	T. Stanton	T. Stanton	03/03
Reviewed	T. Stanton		04/06

SAN DIEGO REGIONAL STANDARD DRAWING

SINGLE BOX CULVERT
DETAILS No.1

RECOMMENDED BY THE SAN DIEGO REGIONAL STANDARDS COMMITTEE

Chairperson R.C.E. 19246 Date 3/10/2003

DRAWING NUMBER **D-76A**

METRIC TABLE – SPAN 1.88m (all measuements in millimeters unless otherwise noted).

SPAN			1.88m																			
HEIGHT			2'		3'		4'			5'				6'					7'				
STRENGTH CLASSIFICATION			A	B	A	B	A	B	C	A	B	C	D	A	B	C	D	E	A	B	C	D	E
MAX FILL OVER TOP			254	457	254	457	254	457	635	229	457	635	914	229	432	635	914	1.14m	229	432	635	914	1.14m
CONC.	Top Slab	T_1	210	210	210	210	210	210	235	210	210	235	279	210	210	235	279	305	210	210	235	279	305
CONC.	Bottom Slab	T_2	172	203	172	203	172	203	248	184	210	305	286	184	210	267	286	311	184	210	267	286	311
CONC.	Sidewalls	T_3	152	152	152	152	152	152	152	152	152	152	152	152	152	152	159	178	152	152	159	178	197
Reinforcing Steel	"a"	Size Bar "	16	16	16	16	16	16	19	16	16	19	19	16	16	19	22	22	16	16	19	22	22
Reinforcing Steel	"a"	Spacing	102	102	102	102	102	102	127	102	102	127	4 1/2	102	102	127	5 1/2	5	102	102	127	140	127
Reinforcing Steel	"a"	Length	2.21m	2.21m	2.21m	2.21m	2.21m	2.21m	2.18m	2.21m	2.21m	2.18m	2.18m	2.21m	2.21m	2.18m	2.21m	2.26m	2.21m	2.21m	2.18m	2.26m	2.29m
Reinforcing Steel	"d" Dist.	Top Slab–No. of	7	4	7	4	7	4		7	4		4	7	4		4	4	7	4		4	4
Reinforcing Steel	Bars	Bottom Slab–No. of	4		4		4			4			4	4			4	4	4			4	4
Reinforcing Steel	"e" Bars	Spacing	457	457	457	457	457	457	432	457	394	292	216	432	267	191	152	127	305	191	178	127	114
Reinforcing Steel	Spacers	Number	12		12		14			16				16					18				
QUAN.	Concrete: Cubic Meter per lin. ft.		30.6	32.2	32.9	35.2	36.0	38.3	44.4	44.4	41.3	45.9	50.5	42.9	44.4	49.7	54.3	59.7	45.1	46.7	53.6	59.7	67.3
QUAN.	Reinf. kg per lin. ft.		29.0	28.6	30.0	29.5	31.3	30.4	33.6	31.8	31.8	36.3	41.3	33.2	35.4	41.8	50.8	57.6	36.8	40.9	44.9	57.2	63.1

IMPERIAL TABLE – SPANS 6' (all measuements in feet and/or inches).

SPAN			6'																				
HEIGHT			2'		3'		4'			5'				6'					7'				
STRENGTH CLASSIFICATION			A	B	A	B	A	B	C	A	B	C	D	A	B	C	D	E	A	B	C	D	E
MAX FILL OVER TOP			10	18	10	18	10	18	25	9	18	25	36	9	17	25	36	45	9	17	25	36	45
CONC.	Top Slab	T_1	8 1/4	8 1/4	8 1/4	8 1/4	8 1/4	8 1/4	9 1/4	8 1/4	8 1/4	9 1/4	11	8 1/4	8 1/4	9 1/4	11	12	8 1/4	8 1/4	9 1/4	11	12
CONC.	Bottom Slab	T_2	6 3/4	8	6 3/4	8	6 3/4	8	9 3/4	7 1/4	8 1/4	10	11 1/4	7 1/4	8 1/4	10 1/2	11 1/4	12 1/4	7 1/4	8 1/4	10 1/2	11 1/4	12 1/4
CONC.	Sidewalls	T_3	6	6	6	6	6	6	6	6	6	6	6	6	6	6	6 1/4	7	6	6	6 1/4	7	7 3/4
Reinforcing Steel	"a"	Size Bar "	5	5	5	5	5	5	6	5	5	6	6	5	5	6	7	7	5	5	6	7	7
Reinforcing Steel	"a"	Spacing	4	4	4	4	4	4	5	4	4	5	4 1/2	4	4	5	5 1/2	5	4	4	5	5 1/2	5
Reinforcing Steel	"a"	Length	7–3	7–3	7–3	7–3	7–3	7–3	7–2	7–3	7–3	7–2	7–2	7–3	7–3	7–2	7–3	7–5	7–3	7–3	7–2	7–5	7–6
Reinforcing Steel	"d" Dist.	Top Slab–No. of	7	4	7	4	7	4		7	4		4	7	4		4	4	7	4		4	4
Reinforcing Steel	Bars	Bottom Slab–No. of	4		4		4			4			4	4			4	4	4			4	4
Reinforcing Steel	"e" Bars	Spacing	18	18	18	18	18	18	17	18	15 1/2	11 1/2	8 1/2	17	10 1/2	7 1/2	6	5	12	7 1/2	7	5	4 1/2
Reinforcing Steel	Spacers	Number	12		12		14			16				16					18				
QUAN.	Concrete: C.Y. per lin. ft.		40	42	43	46	47	50	58	52	54	60	66	56	58	65	71	78	59	61	70	78	88
QUAN.	Reinf. lbs per lin. ft.		64	63	66	65	69	67	74	70	70	80	91	73	78	92	112	127	81	90	99	126	139

NOTE:
For boxes of height less than that shown in table, use next greater table height slabs, wall dimensions and reinforcing steel, and make necessary changes in bar lengths, number of spacers and quantities.

Revision	By	Approved	Date
ORIGINAL		A.Kercheval	12/75
Add Metric		T. Stanton	03/03
Reviewed		T. Stanton	04/06

SAN DIEGO REGIONAL STANDARD DRAWING

SINGLE BOX CULVERT

DETAILS No.1

RECOMMENDED BY THE SAN DIEGO REGIONAL STANDARDS COMMITTEE

Chairperson R.C.E. 19246 Date 3/01/2003

DRAWING NUMBER **D-76B**

METRIC TABLE – SPAN 2.13m (all measuements in millimeters unless otherwise noted).
For Imperial table (7' Span) – see drawing D76D

SPAN			2.13m												
HEIGHT			914		1.22m		1.52m			1.83m			2.14		
STRENGTH CLASSIFICATION			A	B	A	B	A	B	C	A	B	C	A	B	C
MAX FILL OVER TOP			406	660	406	660	406	660	889	406	660	889	406	660	889
CONC.	Top Slab	T_1	184	210	184	210	184	210	248	184	210	248	184	210	248
CONC.	Bottom Slab	T_2	191	222	191	222	191	222	267	191	222	267	191	222	267
CONC.	Sidewalls	T_3	152	178	152	178	152	178	216	152	178	216	152	178	216
Reinforcing Steel	"a"	Size Bar "	16	16	16	16	16	16	19	16	16	19	16	16	19
Reinforcing Steel	"a"	Spacing	229	178	229	178	229	178	229	229	178	229	229	178	229
Reinforcing Steel	"a"	Length	2.03m	2.06m	2.03m	2.06m	2.03m	2.06m	2.08m	2.03m	2.06m	2.08m	2.03m	2.06m	2.08m
Reinforcing Steel	"b"	Size Bar "	16	16	16	16	16	16	19	16	16	19	16	16	19
Reinforcing Steel	"b"	Spacing	229	178	229	178	229	178	229	229	178	229	229	178	229
Reinforcing Steel	"b"	Dimension "X"	381	406	381	406	381	406	508	381	406	508	381	406	508
Reinforcing Steel	"b"	Length	940	965	940	965	940	965	1.17m	940	965	1.17m	940	965	1.17m
Reinforcing Steel	"c"	Size Bar "	16	16	16	16	16	16	19	16	16	19	16	16	19
Reinforcing Steel	"c"	Spacing	229	178	229	178	229	178	229	229	178	229	229	178	229
Reinforcing Steel	"c"	Dimension "Y"	559	584	559	584	559	584	686	559	584	686	559	584	686
Reinforcing Steel	"c"	Length	1.58m	1.53m	1.58m	1.93m	2.18m	2.24m	2.39m	2.49m	2.24m	2.69m	2.80m	2.85m	3.0m
Reinforcing Steel	"c_1"	Size Bar "	16	16	16	16	16	16	19	16	16	19	16	16	19
Reinforcing Steel	"c_1"	Spacing	229	178	229	178	229	178	229	229	178	229	229	178	229
Reinforcing Steel	"c_1"	Dimension "Y"	559	584	559	584	559	584	686	559	584	686	559	584	686
Reinforcing Steel	"c_1"	Length	1.12m	1.17m	1.12m	1.17m	1.12m	1.17m	1.37m	1.12m	1.17m	1.37m	1.12m	1.17m	1.37m
Reinforcing Steel	"d" Bars	Top Slab–No. of	7	4	7	4	7	4	4	7	4	4	7	4	4
Reinforcing Steel	"d" Bars	Bottom Slab–No. of	4	4	4	4	4	4	4	4	4	4	4	4	4
Reinforcing Steel	"e" Bars	Spacing	457	457	457	457	457	457	457	457	457	457	457	457	457
Reinforcing Steel	Spacers	Total Number	24		28		28			32			36		
QUAN.	Concrete: cu meters per lin. ft.		36.0	42.9	39.0	45.9	42.1	49.0	59.7	44.4	52.0	64.3	47.4	55.9	68.0
QUAN.	Reinf kg per lin. ft.		48.6	59.0	51.8	62.6	53.6	64.9	76.3	56.7	68.0	80.0	59.9	71.7	83.5

NOTE:
For boxes of height less than that shown in table, use next greater table height slabs, wall dimensions and reinforcing steel, and make necessary changes in bar lengths, number of spacers and quantities.

Revision	By	Approved	Date
ORIGINAL		A.Kercheval	12/75
Add Metric		T. Stanton	03/03
Reviewed		T. Stanton	04/06

SAN DIEGO REGIONAL STANDARD DRAWING

SINGLE BOX CULVERT
DETAILS No.1

RECOMMENDED BY THE SAN DIEGO REGIONAL STANDARDS COMMITTEE

Chairperson R.C.E. 19246 Date 3/10/2003

DRAWING NUMBER **D-76C**

IMPERIAL TABLE – SPAN 7' (all measuements in feet and/or inches unless otherwise noted).
For Metric Table (2.13m Span) – see drawing D76C

SPAN			7'												
HEIGHT			3'		4'		5'			6'			7'		
STRENGTH CLASSIFICATION			A	B	A	B	A	B	C	A	B	C	A	B	C
MAX FILL OVER TOP			16	26	16	26	16	26	35	16	26	35	16	26	35
CONC.	Top Slab	T_1	7 1/4	8 1/4	7 1/4	8 1/4	7 1/4	8 1/4	9 3/4	7 1/4	8 1/4	9 3/4	7 1/4	8 1/4	9 3/4
CONC.	Bottom Slab	T_2	7 1/2	8 3/4	7 1/2	8 3/4	7 1/2	8 3/4	10 1/2	7 1/2	8 3/4	10 1/2	7 1/2	8 3/4	10 1/2
CONC.	Sidewalls	T_3	6	7	6	7	6	7	8 1/2	6	7	8 1/2	6	7	8 1/2
Reinforcing Steel	"a"	Size Bar "	5	5	5	5	5	5	6	5	5	6	5	5	6
		Spacing	9	7	9	7	9	7	9	9	7	9	9	7	9
		Length	6–8	6–9	6–8	6–9	6–8	6–9	6–10	6–8	6–9	6–10	6–8	6–9	6–10
	"b"	Size Bar "	5	5	5	5	5	5	6	5	5	6	5	5	6
		Spacing	9	7	9	7	9	7	9	9	7	9	9	7	9
		Dimension "X"	1–3	1–4	1–3	1–4	1–3	1–4	1–8	1–3	1–4	1–8	1–3	1–4	1–8
		Length	3–1	3–2	3–1	3–2	3–1	3–2	3–10	3–1	3–2	3–10	3–1	3–2	3–10
	"c"	Size Bar "	5	5	5	5	5	5	6	5	5	6	5	5	6
		Spacing	9	7	9	7	9	7	9	9	7	9	9	7	9
		Dimension "Y"	1–10	1–11	1–10	1–11	1–10	1–11	2–3	1–10	1–11	2–3	1–10	1–11	2–3
		Length	5–2	5–4	6–2	6–4	7–2	7–4	7–10	8–2	8–4	8–10	9–2	9–4	9–10
	"c_1"	Size Bar "	5	5	5	5	5	5	6	5	5	6	5	5	6
		Spacing	9	7	9	7	9	7	9	9	7	9	9	7	9
		Dimension "Y"	1–10	1–11	1–10	1–11	1–10	1–11	2–3	1–10	1–11	2–3	1–10	1–11	2–3
		Length	3–8	3–10	3–8	3–10	3–8	3–10	4–6	3–8	3–10	4–6	3–8	3–10	4–6
	"d" Bars	Top Slab–No. of	7	4	7	4	7	4	4	7	4	4	7	4	4
		Bottom Slab–No. of	4	4	4	4	4	4	4	4	4	4	4	4	4
	"e" Bars	Spacing	18	18	18	18	18	18	18	18	18	18	18	18	18
	Spacers	Total Number	24		28		28			32			36		
QUAN.	Concrete: C.Y. per lin. ft.		47	56	51	60	55	64	78	58	68	84	62	73	89
QUAN.	Reinf lbs per lin. ft.		107	130	114	138	118	143	168	125	150	176	132	158	184

NOTE:
For boxes of height less than that shown in table, use next greater table height slabs, wall dimensions and reinforcing steel, and make necessary changes in bar lengths, number of spacers and quantities.

Revision	By	Approved	Date
ORIGINAL		A.Kercheval	12/75
Add Metric		T. Stanton	03/03
Reviewed		T. Stanton	04/06

SAN DIEGO REGIONAL STANDARD DRAWING

SINGLE BOX CULVERT
DETAILS No.1

RECOMMENDED BY THE SAN DIEGO REGIONAL STANDARDS COMMITTEE

Chairperson R.C.E. 19246 Date 3/10/2003

DRAWING NUMBER D-76D

METRIC TABLE – SPAN 2.44m (all measuements in millimeters unless otherwise noted).
For Imperial table (8' Span) – see drawing D76F

SPAN			2.44m														
HEIGHT			910mm		1.22m		1.52m		1.83m			2.13m			2.44m		
STRENGTH CLASSIFICATION			A	B	A	B	A	B	A	B	C	A	B	C	A	B	C
MAX FILL OVER TOP			4m	6.4m	4m	6.4m	4m	6.4m	4m	6.4m	9.4m	4m	6.4m	9.4m	4m	6.4m	9.4m
CONC.	Top Slab	T_1	184	216	184	216	184	216	184	216	260	184	216	260	184	216	260
CONC.	Bottom Slab	T_2	184	241	184	241	184	241	184	241	292	184	241	292	184	241	292
CONC.	Sidewalls	T_3	165	184	165	184	165	184	165	184	248	165	184	248	165	184	248
Reinforcing Steel	"a"	Size Bar "	16	16	16	16	16	16	16	16	19	16	16	19	16	16	19
		Spacing	229	178	229	178	229	178	229	178	203	229	178	203	229	178	203
		Length	2.31m	2.34m	2.31m	2.34m	2.31m	2.34m	2.31m	2.34m	2.40m	2.31m	2.34m	2.40m	2.31m	2.34m	2.40m
	"b"	Size Bar "	16	16	16	16	16	16	16	16	19	16	16	19	16	16	19
		Spacing	229	178	229	178	229	178	229	178	203	229	178	203	229	178	203
		Dimension "X"	457	483	457	483	457	483	457	483	508	457	483	508	457	483	508
		Length	1.02m	1.04m	1.02m	1.04m	1.02m	1.04m	1.02m	1.04m	1.17m	1.02m	1.04m	1.17m	1.02m	1.04m	1.17m
	"c"	Size Bar "	16	16	16	16	16	16	16	16	19	16	16	19	16	16	19
		Spacing	229	178	229	178	229	178	229	178	203	229	178	203	229	178	203
		Dimension "Y"	610	737	610	737	610	737	610	737	813	610	737	813	610	737	813
		Length	1.02m	1.17m	1.93m	2.08m	2.24m	2.39m	2.54m	2.69m	2.82m	2.84m	3.10m	3.12m	3.15m	3.30m	3.43m
	"c_1"	Size Bar "	16	16	16	16	16	16	16	16	19	16	16	19	16	16	19
		Spacing	9	7	9	7	9	7	9	7	8	9	7	8	9	7	8
		Dimension "Y"	610	737	610	737	610	737	610	737	813	610	686	813	610	737	813
		Length	1.14m	1.35m	1.14m	1.35m	1.14m	1.35m	3–9	1.35m	1.52m	1.14m	1.35m	1.52m	1.14m	1.35m	1.52m
	"d" Bars	Top Slab–No. of	7	5	7	5	7	5	7	5	5	7	5	5	7	5	5
		Bottom Slab–No. of	5	5	5	5	5	5	5	5	5	5	5	5	5	5	5
	"e" Bars	Spacing	457	457	457	457	457	457	457	457	457	457	457	457	457	457	457
	Spacers	Total Number	28		32		32		36			40			40		
QUAN.	Concrete: Cubic Meter per lin. ft.		39.8	50.0	42.9	53.6	46.9	56.6	50.0	60.4	76.5	52.8	63.5	81.1	55.9	67.3	85.7
QUAN.	Reinf kg per lin. ft.		53.6	65.8	56.7	69.9	58.6	63.1	61.7	75.8	95.8	64.9	79.0	99.8	66.7	81.2	102.1

NOTE:
For boxes of height less than that shown in table, use next greater table height slabs, wall dimensions and reinforcing steel, and make necessary changes in bar lengths, number of spacers and quantities.

Revision	By	Approved	Date
ORIGINAL		A.Kercheval	12/75
Add Metric		T. Stanton	03/03
Reviewed		T. Stanton	04/06

SAN DIEGO REGIONAL STANDARD DRAWING

SINGLE BOX CULVERT
DETAILS No.1

RECOMMENDED BY THE SAN DIEGO REGIONAL STANDARDS COMMITTEE

Chairperson R.C.E. 19246 Date 3/10/2003

DRAWING NUMBER **D-76E**

IMPERIAL TABLE – SPAN 8' (all measuements in feet and/or inches unless otherwise noted).
For Metric table (2.44m Span) – see drawing D76E

SPAN			8'														
HEIGHT			3'		4'		5'		6'			7'			8'		
STRENGTH CLASSIFICATION			A	B	A	B	A	B	A	B	C	A	B	C	A	B	C
MAX FILL OVER TOP			13	21	13	21	13	21	13	21	31	13	21	31	13	21	31
CONC.	Top Slab	T_1	7 1/4	8 1/2	7 1/4	8 1/2	7 1/4	8 1/2	7 1/4	8 1/2	10 1/4	7 1/4	8 1/2	10 1/4	7 1/4	8 1/2	10 1/4
CONC.	Bottom Slab	T_2	7 1/4	9 1/2	7 1/4	9 1/2	7 1/4	9 1/2	7 1/4	9 1/2	11 1/2	7 1/4	9 1/2	11 1/2	7 1/4	9 1/2	11 1/2
CONC.	Sidewalls	T_3	6 1/2	7 1/2	6 1/2	7 1/2	6 1/2	7 1/2	6 1/2	7 1/2	9 3/4	6 1/2	7 1/2	9 3/4	6 1/2	7 1/2	9 3/4
Reinforcing Steel	"a"	Size Bar "	5	5	5	5	5	5	5	5	6	5	5	6	5	5	6
Reinforcing Steel	"a"	Spacing	9	7	9	7	9	7	9	7	8	9	7	8	9	7	8
Reinforcing Steel	"a"	Length	7–7	7–8	7–7	7–8	7–7	7–8	7–7	7–8	7–10	7–7	7–8	7–10	7–7	7–8	7–10
Reinforcing Steel	"b"	Size Bar "	5	5	5	5	5	5	5	5	6	5	5	6	5	5	6
Reinforcing Steel	"b"	Spacing	9	7	9	7	9	7	9	7	8	9	7	8	9	7	8
Reinforcing Steel	"b"	Dimension "X"	1–6	1–7	1–6	1–7	1–6	1–7	1–6	1–7	1–8	1–6	1–7	1–8	1–6	1–7	1–8
Reinforcing Steel	"b"	Length	3–4	3–5	3–4	3–5	3–4	3–5	3–4	3–5	3–10	3–4	3–5	3–10	3–4	3–5	3–10
Reinforcing Steel	"c"	Size Bar "	5	5	5	5	5	5	5	5	6	5	5	6	5	5	6
Reinforcing Steel	"c"	Spacing	9	7	9	7	9	7	9	7	8	9	7	8	9	7	8
Reinforcing Steel	"c"	Dimension "Y"	2–0	2–5	2–0	2–5	2–0	2–5	2–0	2–5	2–8	2–0	2–5	2–8	2–0	2–5	2–8
Reinforcing Steel	"c"	Length	3–4	3–10	6–4	6–10	7–4	7–10	8–4	8–10	9–3	9–4	9–10	10–3	10–4	10–10	11–3
Reinforcing Steel	"c_1"	Size Bar "	5	5	5	5	5	5	5	5	6	5	5	6	5	5	6
Reinforcing Steel	"c_1"	Spacing	9	7	9	7	9	7	9	7	8	9	7	8	9	7	8
Reinforcing Steel	"c_1"	Dimension "Y"	2–0	2–5	2–0	2–5	2–0	2–5	2–0	2–5	2–8	2–0	2–3	2–8	2–0	2–5	2–8
Reinforcing Steel	"c_1"	Length	3–9	4–5	3–9	4–5	3–9	4–5	3–9	4–5	5–0	3–9	4–5	5–0	3–9	4–5	5–0
Reinforcing Steel	"d" Bars	Top Slab–No. of	7	5	7	5	7	5	7	5	5	7	5	5	7	5	5
Reinforcing Steel	"d" Bars	Bottom Slab–No. of	5	5	5	5	5	5	5	5	5	5	5	5	5	5	5
Reinforcing Steel	"e" Bars	Spacing	18	18	18	18	18	18	18	18	18	18	18	18	18	18	18
Reinforcing Steel	Spacers	Total Number	28		32		32		36			40			40		
QUAN.	Concrete: C.Y. per lin. ft.		52	65	56	70	60	74	65	79	100	69	83	106	73	88	112
QUAN.	Reinf lbs per lin. ft.		118	146	125	154	129	139	136	167	211	143	174	220	147	179	225

NOTE:
For boxes of height less than that shown in table, use next greater table height slabs, wall dimensions and reinforcing steel, and make necessary changes in bar lengths, number of spacers and quantities.

Revision	By	Approved	Date
ORIGINAL		A.Kercheval	12/75
Add Metric		T. Stanton	03/03
Reviewed		T. Stanton	04/06

SAN DIEGO REGIONAL STANDARD DRAWING

SINGLE BOX CULVERT
DETAILS No.1

RECOMMENDED BY THE SAN DIEGO REGIONAL STANDARDS COMMITTEE

Chairperson R.C.E. 19246 Date 3/10/2003

DRAWING NUMBER **D-76F**

METRIC TABLE – SPAN 3.05m (all measuements in millimeters unless otherwise noted).
For Imperial table (10' Span) – see drawing D76H

SPAN			3.05m																
HEIGHT			1.22m		1.52m		1.83m		2.13m		2.44m			2.74m			3.05m		
STRENGTH CLASSIFICATION			A	B	A	B	A	B	A	B	A	B	C	A	B	C	A	B	C
MAX FILL OVER TOP			2.7m	5.5m	2.7m	5.5m	2.7m	5.5m	2.7m	5.5m	2.4m	5.5m	8.5m	2.4m	5.5m	8.5m	2.4m	5.5m	8.5m
CONC.	Top Slab	T_1	203	241	210	248	210	248	216	248	216	248	311	216	248	311	216	248	311
CONC.	Bottom Slab	T_2	222	267	229	272	229	272	235	279	235	279	337	235	279	337	235	279	337
CONC.	Sidewalls	T_3	184	241	184	241	184	241	184	241	184	241	292	8	241	292	229	241	292
Reinforcing Steel	"a"	Size Bar "	19	19	19	19	19	19	19	19	19	19	22	19	19	22	19	19	22
		Spacing	279	203	279	203	279	203	279	203	279	203	229	279	203	229	279	203	229
		Length	2.87m	2.95m	2.87m	2.95m	2.87m	2.95m	2.87m	2.95m	2.87m	2.95m	2.97m	9–6	2.95m	2.97m	2.87m	2.95m	2.97m
	"b"	Size Bar "	16	19	16	19	16	19	16	19	16	19	19	16	19	19	16	19	19
		Spacing	279	203	279	203	279	203	279	203	279	203	229	279	203	229	279	203	229
		Dimension "X"	610	610	610	610	610	610	610	610	610	610	782	610	610	782	610	610	782
		Length	1.17m	1.27m	1.17m	1.27m	1.17m	1.27m	1.17m	1.27m	1.17m	1.27m	1.42m	1.17m	1.27m	1.42m	1.17m	1.27m	1.42m
	"c"	Size Bar "	16	19	16	19	16	19	16	19	16	19	19	16	19	19	16	19	19
		Spacing	279	203	279	203	279	203	279	203	279	203	229	279	203	229	279	203	229
		Dimension "Y"	813	1.02m	813	1.02m	813	1.02m	813	1.02m	813	1.02m	1.07m	813	1.02m	1.07m	813	1.02m	1.07m
		Length	2.11m	2.39m	2.46m	2.69m	2.77m	9–10	10–1	10–10	11–1	11–10	12–3	12–1	12–10	13–3	13–1	13–10	14–3
	"c_1"	Size Bar "	16	19	16	19	16	19	16	19	16	19	19	16	19	19	16	19	19
		Spacing	279	203	279	203	279	203	279	203	279	203	229	279	203	229	279	203	229
		Dimension "Y"	813	1.02m	813	1.02m	813	1.02m	813	1.02m	813	1.02m	1.07m	813	1.02m	1.07m	813	1.02m	1.07m
		Length	1.40m	1.73m	1.40m	1.73m	1.40m	1.73m	1.40m	1.73m	1.40m	1.73m	1.88m	1.40m	1.73m	1.88m	1.40m	1.73m	1.88m
	"d" Bars	Top Slab–No. of	9	5	9	5	9	5	9	5	9	5	5	9	5	5	9	5	5
		Bottom Slab–No. of	5	5	5	5	5	5	5	5	5	5	5	5	5	5	5	5	5
	"e" Bars	Spacing	457	457	457	457	457	457	457	457	457	457	457	457	457	457	457	457	457
	Spacers	Total Number	32		34		36		40		40			44			48		
QUAN.	Concrete: Cu Meter per lin. ft.		57.4	71.9	62.7	85.6	65.8	85.6	70.4	88.0	74.2	92.6	114.7	81.1	96.4	120.1	90.3	101.0	126.2
QUAN.	Reinf kg per lin. ft.		64.9	100	67.2	103.5	69.9	106.6	72.6	110.7	74.4	113.4	120.3	77.2	117.5	123.9	80.8	121.2	127.5

NOTE:
For boxes of height less than that shown in table, use next greater table height slabs, wall dimensions and reinforcing steel, and make necessary changes in bar lengths, number of spacers and quantities.

Revision	By	Approved	Date
ORIGINAL		A.Kercheval	12/75
Add Metric		T. Stanton	03/03
Reviewed		T. Stanton	04/06

SAN DIEGO REGIONAL STANDARD DRAWING

SINGLE BOX CULVERT
DETAILS No.1

RECOMMENDED BY THE SAN DIEGO REGIONAL STANDARDS COMMITTEE

Chairperson R.C.E. 19246 Date 3/01/2003

DRAWING NUMBER **D-76G**

IMPERIAL TABLE – SPAN 10' (all measuements in feet and/or inches unless otherwise noted).
For Metric table (3.05m Span) – see drawing D76G

SPAN			10'																
HEIGHT			4'		5'		6'		7'		8'			9'			10'		
STRENGTH CLASSIFICATION			A	B	A	B	A	B	A	B	A	B	C	A	B	C	A	B	C
MAX FILL OVER TOP			9	18	9	18	9	18	9	18	8	18	28	8	18	28	8	18	28
CONC.	Top Slab	T_1	8	9 1/2	8 1/4	9 3/4	8 1/4	9 3/4	8 1/2	9 3/4	8 1/2	9 3/4	12 1/4	8 1/2	9 3/4	12 1/4	8 1/2	9 3/4	12 1/4
CONC.	Bottom Slab	T_2	8 3/4	10 1/2	9	10 3/4	9	10 3/4	9 1/4	11	9 1/4	11	13 1/4	9 1/4	11	13 1/4	9 1/4	11	13 1/4
CONC.	Sidewalls	T_3	7 1/4	9 1/2	7 1/4	9 1/2	7 1/4	9 1/2	7 1/4	9 1/2	7 1/4	9 1/2	11 1/2	8	9 1/2	11 1/2	9	9 1/2	11 1/2
Reinforcing Steel	"a"	Size Bar "	6	6	6	6	6	6	6	6	6	6	7	6	6	7	6	6	7
Reinforcing Steel	"a"	Spacing	11	8	11	8	11	8	11	8	11	8	9	11	8	9	11	8	9
Reinforcing Steel	"a"	Length	9–5	9–8	9–5	9–8	9–5	9–8	9–5	9–8	9–5	9–8	9–9	9–6	9–8	9–9	9–5	9–8	9–9
Reinforcing Steel	"b"	Size Bar "	5	6	5	6	5	6	5	6	5	6	6	5	6	6	5	6	6
Reinforcing Steel	"b"	Spacing	11	8	11	8	11	8	11	8	11	8	9	11	8	9	11	8	9
Reinforcing Steel	"b"	Dimension "X"	2–0	2–0	2–0	2–0	2–0	2–0	2–0	2–0	2–0	2–0	2–6	2–0	2–0	2–6	2–0	2–0	2–6
Reinforcing Steel	"b"	Length	3–10	4–2	3–10	4–2	3–10	4–2	3–10	4–2	3–10	4–2	4–8	3–10	4–2	4–8	3–10	4–2	4–8
Reinforcing Steel	"c"	Size Bar "	5	6	5	6	5	6	5	6	5	6	6	5	6	6	5	6	6
Reinforcing Steel	"c"	Spacing	11	8	11	8	11	8	11	8	11	8	9	11	8	9	11	8	9
Reinforcing Steel	"c"	Dimension "Y"	2–8	3–4	2–8	3–4	2–8	3–4	2–8	3–4	2–8	3–4	3–6	2–8	3–4	3–6	2–8	3–4	3–6
Reinforcing Steel	"c"	Length	6–11	7–10	8–1	8–10	9–1	9–10	10–1	10–10	11–1	11–10	12–3	12–1	12–10	13–3	13–1	13–10	14–3
Reinforcing Steel	"c_1"	Size Bar "	5	6	5	6	5	6	5	6	5	6	6	5	6	6	5	6	6
Reinforcing Steel	"c_1"	Spacing	11	8	11	8	11	8	11	8	11	8	9	11	8	9	11	8	9
Reinforcing Steel	"c_1"	Dimension "Y"	2–8	3–4	2–8	3–4	2–8	3–4	2–8	3–4	2–8	3–4	3–6	2–8	3–4	3–6	2–8	3–4	3–6
Reinforcing Steel	"c_1"	Length	4–7	5–8	4–7	5–8	4–7	5–8	4–7	5–8	4–7	5–8	6–0	4–7	5–8	6–0	4–7	5–8	6–2
Reinforcing Steel	"d" Bars	Top Slab–No. of	9	5	9	5	9	5	9	5	9	5	5	9	5	5	9	5	5
Reinforcing Steel	"d" Bars	Bottom Slab–No. of	5	5	5	5	5	5	5	5	5	5	5	5	5	5	5	5	5
Reinforcing Steel	"e" Bars	Spacing	18	18	18	18	18	18	18	18	18	18	18	18	18	18	18	18	18
Reinforcing Steel	Spacers	Total Number	32		34		36		40		40			44			48		
QUAN.	Concrete: C.Y. per lin. ft.		75	94	82	108	86	108	92	115	97	121	150	106	126	157	118	132	165
QUAN.	Reinf lbs per lin. ft.		143	221	148	228	154	235	160	244	164	250	265	170	259	273	178	267	281

NOTE:
For boxes of height less than that shown in table, use next greater table height slabs, wall dimensions and reinforcing steel, and make necessary changes in bar lengths, number of spacers and quantities.

Revision	By	Approved	Date
ORIGINAL		A.Kercheval	12/75
Add Metric		T. Stanton	03/03
Reviewed	T. Stanton		04/06

SAN DIEGO REGIONAL STANDARD DRAWING

SINGLE BOX CULVERT

DETAILS No.1

RECOMMENDED BY THE SAN DIEGO REGIONAL STANDARDS COMMITTEE

Chairperson R.C.E. 19246 Date 3/01/2003

DRAWING NUMBER **D-76H**

METRIC TABLE – SPAN 3.66m (all measuements in millimeters unless otherwise noted).
For Imperial table (12' Span) – see drawing D76J

SPAN			3.66m														
HEIGHT			1.83m		2.13m		2.44m		2.74m			3.05m			3.66m		
STRENGTH CLASSIFICATION			A	B	A	B	A	B	A	B	C	A	B	C	A	B	C
MAX FILL OVER TOP			1.5m	4.9m	1.5m	4.9m	1.5m	4.9m	1.5m	4.9m	7.3m	1.5m	4.9m	7.3m	1.5m	4.9m	7.3m
CONC.	Top Slab	T_1	222	286	222	286	222	286	229	286	337	229	286	337	229	286	337
CONC.	Bottom Slab	T_2	222	311	222	311	222	311	229	311	375	229	311	375	229	311	375
CONC.	Sidewalls	T_3	191	267	191	267	191	267	203	267	318	229	267	318	229	267	318
Reinforcing Steel	"a"	Size Bar "	19	22	19	22	19	22	19	22	22	19	22	22	19	22	22
		Spacing	279	254	279	254	279	254	279	254	203	279	254	203	279	254	203
		Length	3.38m	4.27m	3.38m	4.27m	3.38m	4.27m	3.45m	4.27m	3.56m	3.48m	4.27m	3.56m	3.48m	4.27m	3.56m
	"b"	Size Bar "	19	22	19	22	19	22	19	22	22	19	22	22	19	22	22
		Spacing	279	254	279	254	279	254	279	254	203	279	254	203	279	254	203
		Dimension "X"	813	914	813	914	813	914	813	914	914	813	914	914	813	914	914
		Length	1.47m	1.70m	1.47m	1.70m	1.47m	1.70m	1.47m	1.70m	1.70m	1.47m	1.70m	1.70m	1.47m	1.70m	1.70m
	"c"	Size Bar "	19	22	19	22	19	22	19	22	22	19	22	22	19	22	22
		Spacing	279	254	279	254	279	254	279	254	203	279	254	203	279	254	203
		Dimension "Y"	1.14m	1.14m	1.14m	1.14m	1.14m	1.14m	1.14m	1.14m	1.14m	1.14m	1.14m	1.14m	1.14m	1.14m	1.14m
		Length	3.10m	3.15m	3.40m	3.45m	3.71m	3.76m	4.01m	4.06m	4.11m	4.32m	4.37m	4.42m	4.93m	4.98m	5.03m
	"c_1"	Size Bar "	19	22	19	22	19	22	19	22	22	19	22	22	19	22	22
		Spacing	11	10	11	10	11	10	11	10	8	11	10	8	11	10	8
		Dimension "Y"	1.14m	1.14m	1.14m	1.14m	1.14m	1.14m	1.14m	1.14m	1.14m	1.14m	1.14m	1.14m	1.14m	1.14m	1.14m
		Length	1.80m	1.96m	1.80m	1.96m	1.80m	1.98m	1.80m	1.98m	2.03m	1.80m	1.98m	2.03m	1.80m	1.98m	2.03m
	"d" Bars	Top Slab–No. of	10	6	10	6	10	6	10	6	6	10	6	6	10	6	6
		Bottom Slab–No. of	6	6	6	6	6	6	6	6	6	6	6	6	6	6	6
	"e" Bars	Spacing	457	457	457	457	457	457	457	457	457	457	457	457	457	457	457
	Spacers	Total Number	36		44		44		44			48			52		
QUAN.	Concrete: cu m per lin. ft.		76.7	105.5	78.8	110.1	82.6	116.3	90.3	120.6	145.3	99.4	126.2	151.4	107.9	136.1	162.9
QUAN.	Reinf kg per lin. ft.		92.1	133.0	96.7	137.9	98.9	141.1	101.2	143.8	175.6	104.8	147.9	180.1	110.3	154.7	188.3

NOTE:
For boxes of height less than that shown in table, use next greater table height slabs, wall dimensions and reinforcing steel, and make necessary changes in bar lengths, number of spacers and quantities.

Revision	By	Approved	Date
ORIGINAL		A.Kercheval	12/75
Add Metric		T. Stanton	03/03
Reviewed		T. Stanton	04/06

SAN DIEGO REGIONAL STANDARD DRAWING

SINGLE BOX CULVERT DETAILS No.1

RECOMMENDED BY THE SAN DIEGO REGIONAL STANDARDS COMMITTEE

3/01/2003

Chairperson R.C.E. 19246 Date

DRAWING NUMBER D-76I

IMPERIAL TABLE – SPAN 12' (all measuements in feet and/or inches unless otherwise noted).
For Metric table (3.66m Span) – see drawing D76I

SPAN			12'														
HEIGHT			6'		7'		8'		9'			10'			12'		
STRENGTH CLASSIFICATION			A	B	A	B	A	B	A	B	C	A	B	C	A	B	C
MAX FILL OVER TOP			5	16	5	16	5	16	5	16	24	5	16	24	5	16	24
CONC.	Top Slab	T_1	8 3/4	11 1/4	8 3/4	11 1/4	8 3/4	11 1/4	9	11 1/4	13 1/4	9	11 1/4	13 1/4	9	11 1/4	13 1/4
CONC.	Bottom Slab	T_2	8 3/4	12 1/4	8 3/4	12 1/4	8 3/4	12 1/4	9	12 1/4	14 3/4	9	12 1/4	14 3/4	9	12 1/4	14 3/4
CONC.	Sidewalls	T_3	7 1/2	10 1/2	7 1/2	10 1/2	7 1/2	10 1/2	8	10 1/2	12 1/2	9	10 1/2	12 1/2	9	10 1/2	12 1/2
Reinforcing Steel	"a"	Size Bar "	6	7	6	7	6	7	6	7	7	6	7	7	6	7	7
		Spacing	11	10	11	10	11	10	11	10	8	11	10	8	11	10	8
		Length	11–3	11–6	11–3	11–6	11–3	11–6	11–4	11–6	11–8	11–5	11–6	11–8	11–5	11–6	11–8
	"b"	Size Bar "	6	7	6	7	6	7	6	7	7	6	7	7	6	7	7
		Spacing	11	10	11	10	11	10	11	10	8	11	10	8	11	10	8
		Dimension "X"	2–8	3–0	2–8	3–0	2–8	3–0	2–8	3–0	3–0	2–8	3–0	3–0	2–8	3–0	3–0
		Length	4–10	5–7	4–10	5–7	4–10	5–7	4–10	5–7	5–7	4–10	5–7	5–7	4–10	5–7	5–7
	"c"	Size Bar "	6	7	6	7	6	7	6	7	7	6	7	7	6	7	7
		Spacing	11	10	11	10	11	10	11	10	8	11	10	8	11	10	8
		Dimension "Y"	3–9	3–9	3–9	3–9	3–9	3–9	3–9	3–9	3–9	3–9	3–9	3–9	3–9	3–9	3–9
		Length	10–2	10–4	11–2	11–4	12–2	12–4	13–2	13–4	13–6	14–2	14–4	14–6	16–2	16–4	16–6
	"c_1"	Size Bar "	6	7	6	7	6	7	6	7	7	6	7	7	6	7	7
		Spacing	11	10	11	10	11	10	11	10	8	11	10	8	11	10	8
		Dimension "Y"	3–9	3–9	3–9	3–9	3–9	3–9	3–9	3–9	3–9	3–9	3–9	3–9	3–9	3–9	3–9
		Length	5–11	6–5	5–11	6–5	5–11	6–6	5–11	6–6	6–8	5–11	6–6	6–8	5–11	6–6	6–8
	"d" Bars	Top Slab–No. of	10	6	10	6	10	6	10	6	6	10	6	6	10	6	6
		Bottom Slab–No. of	6	6	6	6	6	6	6	6	6	6	6	6	6	6	6
	"e" Bars	Spacing	18	18	18	18	18	18	18	18	18	18	18	18	18	18	18
	Spacers	Total Number	36		44		44		44			48			52		
QUAN.	Concrete: C.Y. per lin. ft.		99	138	103	144	108	152	118	158	190	130	165	198	141	178	213
QUAN.	Reinf lbs per lin. ft.		203	293	213	304	218	311	223	317	387	231	326	397	243	341	415

NOTES:
For boxes of height less than that shown in table, use next greater table height slabs, wall dimensions and reinforcing steel, and make necessary changes in bar lengths, number of spacers and quantities.

Revision	By	Approved	Date
ORIGINAL		A.Kercheval	12/75
Add Metric		T. Stanton	03/03
Reviewed		T. Stanton	04/06

SAN DIEGO REGIONAL STANDARD DRAWING

SINGLE BOX CULVERT
DETAILS No.1

RECOMMENDED BY THE SAN DIEGO REGIONAL STANDARDS COMMITTEE

Chairperson R.C.E. 19246 Date 3/10/2003

DRAWING NUMBER **D-76J**

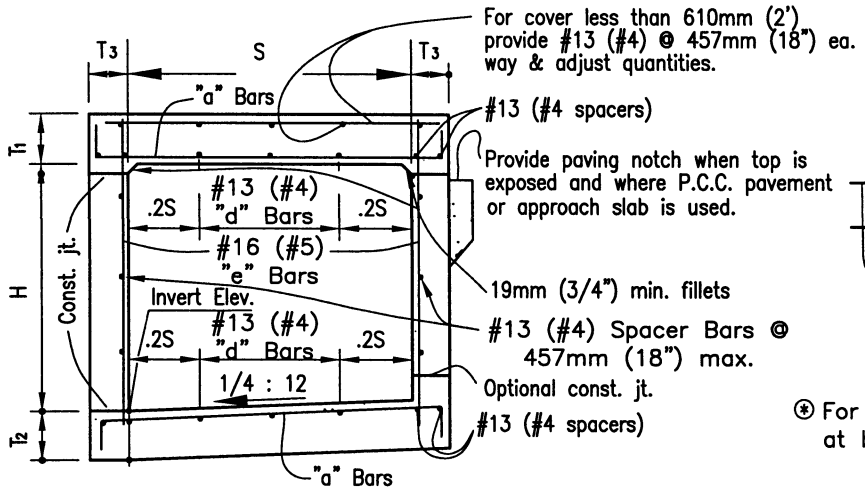

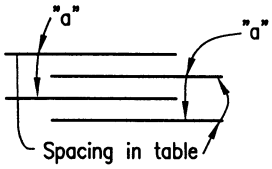

DETAIL "A"

⊛ For reinforcement clearance, except at bottom, see "Miscellaneous Details."

TYPICAL SECTIONS 610mm (2') THRU 1.83m (6') SPANS

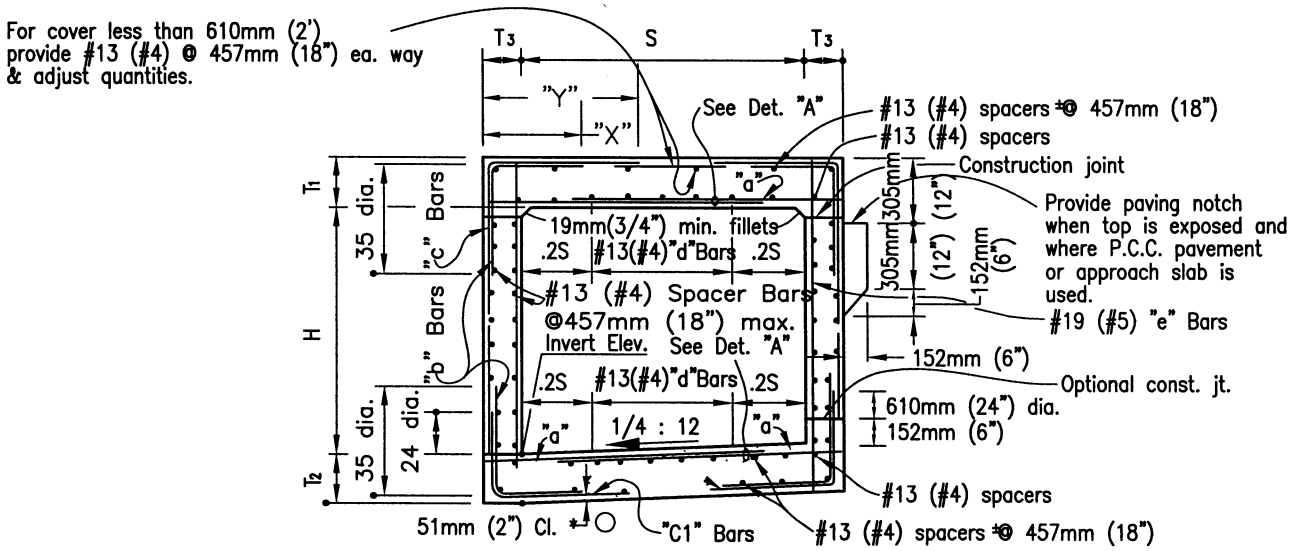

TYPICAL SECTIONS 2.13m (7') THRU 3.66m (12') SPANS

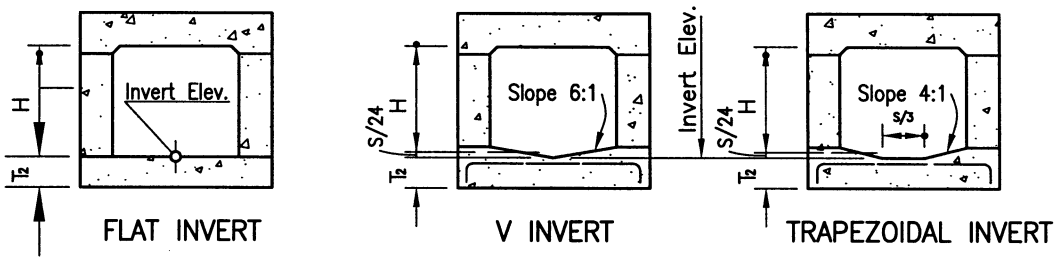

FLAT INVERT

V INVERT

TRAPEZOIDAL INVERT

ALTERNATIVE INVERTS

(When shown)

Revision	By	Approved	Date
ORIGINAL		Kercheval	12/75
Add Metric		T. Stanton	03/03
Reviewed		T. Stanton	04/06

SAN DIEGO REGIONAL STANDARD DRAWING

SINGLE BOX CULVERT DETAILS NO.2

RECOMMENDED BY THE SAN DIEGO REGIONAL STANDARDS COMMITTEE

T. Stanton 3/10/2003

Chairperson R.C.E. 19246 Date

DRAWING NUMBER **D-76K**

METRIC TABLE – SPAN 1.22m (all measuements in millimeters unless otherwise noted).

For Imperial table (4' Span) – see drawing D77B

SPAN			1.22m										
HEIGHT			610mm			914mm				1.22m			
STRENGTH CLASSIFICATION			A	B	C	A	B	C	D	A	B	C	D
MAX FILL OVER TOP			3.35m	6.4m	9.75m	3.35m	7.0m	10.4m	14.0m	3.35m	7.0m	10.4m	14.0m
Conc.	Top Slab	T_1	165	165	184	165	165	191	216	165	165	191	216
Conc.	Bottom Slab	T_2	152	184	216	152	191	216	241	152	191	216	241
Conc.	Sidewalls	T_3	152	152	152	152	152	152	152	152	152	152	152
Reinforcing Steel	"a"	Size Bar #	16	13	13	16	13	13	13	16	13	13	13
		Spacing	279	279	229	279	267	216	191	279	267	216	191
		Length	3.12m	3.10m	3.10m	3.12m	3.10m	3.10m	3.10m	3.12m	3.10m	3.10m	3.10m
	"b" or "b_1"	Size Bar #	16	16	16	16	16	16	16	16	16	16	16
		Spacing	279	279	229	279	267	216	191	279	267	216	191
		Length "b"	2.84m	2.84m	2.90m	2.84m	2.84m	2.90m	2.92	2.84m	2.84m	2.90m	2.92
		Length "b_1"	2.84m	9–5	2.90m	2.84m	2.84m	2.90m	2.92	2.84m	2.84m	2.90m	2.92
	"c"	Size Bar #	13	16	16	13	16	16	16	13	16	16	16
		Spacing	279	279	229	279	267	216	191	279	267	216	191
		Length	1.37m	1.37m	1.37m	1.37m	1.37m	1.37m	1.37m	1.37m	1.37m	1.37m	1.37m
	"d" Dist Bars	Top Slab–Tot. No.	10	6	6	10	6	6	6	10	6	6	6
		Bottom Slab–Tot. No.	6	6	6	6	6	6	6	6	6	6	6
	"e" Bars	Size Bar #	13	13	13	13	13	13	13	13	13	13	16
		Spacing	457	457	457	457	457	406	305	457	305	229	254
	Spacers	Number	23			26				29			
Quan.	Concrete: C.Y. per lin. ft.		0.36	0.39	0.44	0.41	0.44	0.48	0.53	0.45	0.48	0.53	0.57
Quan.	Reinf :lbs per lin. ft.		37	34	38	38	36	41	46	40	39	45	50

NOTE:

For boxes of height less than that shown in table, use next greater table height slabs, wall dimensions and reinforcing steel, and make necessary changes in bar lengths, number of spacers and quantities. Number of "d" bars in table is slab total for both cells.

Revision	By	Approved	Date
ORIGINAL		Kercheval	12/75
Add Metric		T. Stanton	03/03
Reviewed		T. Stanton	04/06

SAN DIEGO REGIONAL STANDARD DRAWING

DOUBLE BOX CULVERT

DETAILS No. 1

RECOMMENDED BY THE SAN DIEGO REGIONAL STANDARDS COMMITTEE

Chairperson R.C.E. 19246 Date 3/10/2003

DRAWING NUMBER D-77A

IMPERIAL TABLE – SPAN 4' (all measuements in feet and/or inches unless otherwise noted).

For Metric Table (1.22m Span) – see drawing D77A

SPAN			4'										
HEIGHT			2'			3'				4'			
STRENGTH CLASSIFICATION			A	B	C	A	B	C	D	A	B	C	D
MAX FILL OVER TOP			11	21	32	11	23	34	46	11	23	34	46
Conc.	Top Slab	T_1	6 1/2	6 1/2	7 1/4	6 1/2	6 1/2	7 1/2	8 1/2	6 1/2	6 1/2	7 1/2	8 1/2
Conc.	Bottom Slab	T_2	6	7 1/4	8 1/2	6	7 1/2	8 1/2	9 1/2	6	7 1/2	8 1/2	9 1/2
Conc.	Sidewalls	T_3	6	6	6	6	6	6	6	6	6	6	6
Reinforcing Steel	"a"	Size Bar #	5	4	4	5	4	4	4	5	4	4	4
Reinforcing Steel	"a"	Spacing	11	11	9	11	10 1/2	8 1/2	7 1/2	11	10 1/2	8 1/2	7 1/2
Reinforcing Steel	"a"	Length	10–3	10–2	10–2	10–3	10–2	10–2	10–2	10–3	10–2	10–2	10–2
Reinforcing Steel	"b" or "b_1"	Size Bar #	5	5	5	5	5	5	5	5	5	5	5
Reinforcing Steel	"b" or "b_1"	Spacing	11	11	9	11	10 1/2	8 1/2	7 1/2	11	10 1/2	8 1/2	7 1/2
Reinforcing Steel	"b" or "b_1"	Length "b"	9–4	9–4	9–6	9–4	9–4	9–6	9–7	9–4	9–4	9–6	9–7
Reinforcing Steel	"b" or "b_1"	Length "b_1"	9–4	9–5	9–6	9–4	9–4	9–6	9–7	9–4	9–4	9–6	9–7
Reinforcing Steel	"c"	Size Bar #	4	5	5	4	5	5	5	4	5	5	5
Reinforcing Steel	"c"	Spacing	11	11	9	11	10 1/2	8 1/2	7 1/2	11	10 1/2	8 1/2	7 1/2
Reinforcing Steel	"c"	Length	4–6	4–6	4–6	4–6	4–6	4–6	4–6	4–6	4–6	4–6	4–6
Reinforcing Steel	"d" Dist Bars	Top Slab–Tot. No.	10	6	6	10	6	6	6	10	6	6	6
Reinforcing Steel	"d" Dist Bars	Bottom Slab–Tot. No.	6	6	6	6	6	6	6	6	6	6	6
Reinforcing Steel	"e" Bars	Size Bar #	4	4	4	4	4	4	4	4	4	4	5
Reinforcing Steel	"e" Bars	Spacing	18	18	18	18	18	16	12	18	12	9	10
Reinforcing Steel	Spacers	Number	23			26				29			
Quan.	Concrete: C.Y. per lin. ft.		0.47	0.51	0.57	0.53	0.57	0.63	0.69	0.59	0.63	0.69	0.75
Quan.	Reinf :lbs per lin. ft.		81	74	84	84	79	91	101	87	85	99	111

NOTE:

For boxes of height less than that shown in table, use next greater table height slabs, wall dimensions and reinforcing steel, and make necessary changes in bar lengths, number of spacers and quantities. Number of "d" bars in table is slab total for both cells.

Revision	By	Approved	Date
ORIGINAL		Kercheval	12/75
Add Metric		T. Stanton	03/03
Reviewed		T. Stanton	04/06

SAN DIEGO REGIONAL STANDARD DRAWING

DOUBLE BOX CULVERT

DETAILS No. 1

RECOMMENDED BY THE SAN DIEGO REGIONAL STANDARDS COMMITTEE

Chairperson R.C.E. 19246 Date 3/10/2003

DRAWING NUMBER **D-77B**

METRIC TABLE – SPAN 1.52m (all measuements in millimeters unless otherwise noted).
For Imperial table (5' Span) – see drawing D77D

SPAN			1.52m													
HEIGHT			610mm			914mm			1.22m				1.62m			
STRENGTH CLASSIFICATION			A	B	C	A	B	C	A	B	C	D	A	B	C	D
MAX FILL OVER TOP			1.83m	11.0m	11.0m	1.83m	7.3m	11.0m	1.83m	7.0m	10.4m	14m	1.83m	7.0m	10.4m	14m
Conc.	Top Slab	T_1	171	197	235	171	197	235	171	197	235	260	171	197	235	260
Conc.	Bottom Slab	T_2	165	222	260	165	222	260	165	222	260	286	165	222	260	286
Conc.	Sidewalls	T_3	152	152	152	152	152	152	152	152	152	152	152	152	152	152
Reinforcing Steel	"a"	Size Bar #	16	13	13	16	13	13	16	13	13	13	16	13	13	13
		Spacing	254	216	254	254	216	254	254	216	254	229	254	216	267	229
		Length	3.73m	3.71m	3.71m	3.73m	3.71m	3.71m	3.73m	3.71m	3.71m	3.71m	3.73m	3.71m	3.71m	3.71m
	"b" or "b_1"	Size Bar #	16	16	19	16	16	19	16	16	19	19	16	16	19	19
		Spacing	254	216	254	254	216	254	254	216	254	229	254	216	267	229
		Length "b"	3.48m	3.51m	3.53m	3.48m	3.51m	3.53m	3.48m	3.51m	3.53m	3.54m	3.48m	3.51m	3.53m	3.54m
		Length "b_1"	3.45m	3.51m	3.53m	3.45m	3.51m	3.53m	3.45m	3.51m	3.53m	3.54m	3.45m	3.51m	3.53m	3.54m
	"c"	Size Bar #	13	16	19	13	16	19	13	16	19	19	13	16	19	19
		Spacing	254	216	254	254	216	254	254	216	254	229	254	216	267	229
		Length	1.68m	1.68m	1.68m	1.68m	1.68m	1.68m	1.68m	1.68m	1.68m	1.68m	1.68m	1.68m	1.68m	1.68m
	"d" Dist Bars	Top Slab–Tot. No.	12	6	6	12	6	6	12	6	6	6	12	6	6	6
		Bottom Slab–Tot. No.	6	6	6	6	6	6	6	6	6	6	6	6	6	6
	"e" Bars	Size Bar #	13	13	13	13	13	13	13	13	13	16	13	13	16	19
		Spacing	457	457	457	457	457	406	457	305	254	267	457	216	229	229
	Spacers	Number	23			26			29				32			
Quan.	Concrete: C.Y. per lin. ft.		0.44	0.53	0.61	0.48	0.57	0.66	0.53	0.61	0.68	0.75	0.57	0.66	0.74	0.80
Quan.	Reinf :lbs per lin. ft.		45	45	49	47	47	51	48	49	54	60	49	53	57	67

NOTE:

For boxes of height less than that shown in table, use next greater table height slabs, wall dimensions and reinforcing steel, and make necessary changes in bar lengths, number of spacers and quantities. Number of "d" bars in table is slab total for both cells.

Revision	By	Approved	Date
ORIGINAL		Kercheval	12/75
Add Metric		T. Stanton	03/03
Reviewed		T. Stanton	04/06

SAN DIEGO REGIONAL STANDARD DRAWING

DOUBLE BOX CULVERT
DETAILS No. 1

RECOMMENDED BY THE SAN DIEGO REGIONAL STANDARDS COMMITTEE

Chairperson R.C.E. 19246 Date 3/10/2003

DRAWING NUMBER D-77C

IMPERIAL TABLE – SPAN 5' (all measuements in feet and/or inches unless otherwise noted).

For Metric Table (1.52m Span) – see drawing D77C

SPAN			5'													
HEIGHT			2'			3'			4'				5'			
STRENGTH CLASSIFICATION			A	B	C	A	B	C	A	B	C	D	A	B	C	D
MAX FILL OVER TOP			6	36	36	6	24	36	6	23	34	46	6	23	34	46
Conc.	Top Slab	T_1	6 3/4	7 3/4	9 1/4	6 3/4	7 3/4	9 1/4	6 3/4	7 3/4	9 1/4	10 1/4	6 3/4	7 3/4	9 1/4	10 1/4
Conc.	Bottom Slab	T_2	6 1/2	8 3/4	10 1/4	6 1/2	8 3/4	10 1/4	6 1/2	8 3/4	10 1/4	11 1/4	6 1/2	8 3/4	10 1/4	11 1/4
Conc.	Sidewalls	T_3	6	6	6	6	6	6	6	6	6	6	6	6	6	6
Reinforcing Steel	"a"	Size Bar #	5	4	4	5	4	4	5	4	4	4	5	4	4	4
Reinforcing Steel	"a"	Spacing	10	8 1/2	10	10	8 1/2	10	10	8 1/2	10	9	10	8 1/2	10 1/2	9
Reinforcing Steel	"a"	Length	12–3	12–2	12–2	12–3	12–2	12–2	12–3	12–2	12–2	12–2	12–3	12–2	12–2	12–2
Reinforcing Steel	"b" or "b_1"	Size Bar #	5	5	6	5	5	6	5	5	6	6	5	5	6	6
Reinforcing Steel	"b" or "b_1"	Spacing	10	8 1/2	10	10	8 1/2	10	10	8 1/2	10	9	10	8 1/2	10 1/2	9
Reinforcing Steel	"b" or "b_1"	Length "b"	11–5	11–6	11–7	11–5	11–6	11–7	11–5	11–6	11–7	11–8	11–5	11–6	11–7	11–8
Reinforcing Steel	"b" or "b_1"	Length "b_1"	11–4	11–6	11–7	11–4	11–6	11–7	11–4	11–6	11–7	11–8	11–4	11–6	11–7	11–8
Reinforcing Steel	"c"	Size Bar #	4	5	6	4	5	6	4	5	6	6	4	5	6	6
Reinforcing Steel	"c"	Spacing	10	8 1/2	10	10	8 1/2	10	10	8 1/2	10	9	10	8 1/2	10 1/2	9
Reinforcing Steel	"c"	Length	5–6	5–6	5–6	5–6	5–6	5–6	5–6	5–6	5–6	5–6	5–6	5–6	5–6	5–6
Reinforcing Steel	"d" Dist Bars	Top Slab–Tot. No.	12	6	6	12	6	6	12	6	6	6	12	6	6	6
Reinforcing Steel	"d" Dist Bars	Bottom Slab–Tot. No.	6	6	6	6	6	6	6	6	6	6	6	6	6	6
Reinforcing Steel	"e" Bars	Size Bar #	4	4	4	4	4	4	4	4	4	5	4	4	5	6
Reinforcing Steel	"e" Bars	Spacing	18	18	18	18	18	16	18	12	10	10 1/2	18	8 1/2	9	9
Reinforcing Steel	Spacers	Number	23			26			29				32			
Quan.	Concrete: C.Y. per lin. ft.		0.58	0.69	0.80	0.63	0.75	0.86	0.69	0.80	0.89	0.98	0.74	0.86	0.97	1.04
Quan.	Reinf :lbs per lin. ft.		99	100	109	103	104	112	106	109	119	133	109	116	126	148

NOTE:

For boxes of height less than that shown in table, use next greater table height slabs, wall dimensions and reinforcing steel, and make necessary changes in bar lengths, number of spacers and quantities. Number of "d" bars in table is slab total for both cells.

Revision	By	Approved	Date
ORIGINAL		Kercheval	12/75
Add Metric		T. Stanton	03/03
Reviewed		T. Stanton	04/06

SAN DIEGO REGIONAL STANDARD DRAWING

DOUBLE BOX CULVERT

DETAILS No. 1

RECOMMENDED BY THE SAN DIEGO REGIONAL STANDARDS COMMITTEE

Chairperson R.C.E. 19246 Date 3/10/2003

DRAWING NUMBER **D-77D**

METRIC TABLE – SPAN 1.83m (all measuements in millimeters unless otherwise noted).
For Imperial table (6' Span) – see drawing D77F

SPAN			1.83m													
HEIGHT			914mm			1.22m			1.52m				1.83m			
STRENGTH CLASSIFICATION			A	B	C	A	B	C	A	B	C	D	A	B	C	D
MAX FILL OVER TOP			1.22m	6.1m	10.4m	1.22m	6.1m	10.4m	1.22m	5.79m	10m	13.1m	1.22m	5.8m	10m	13.1m
Conc.	Top Slab	T_1	184	210	267	184	210	267	184	210	267	305	184	210	267	305
Conc.	Bottom Slab	T_2	184	241	292	184	241	292	184	241	292	324	184	241	292	324
Conc.	Sidewalls	T_3	152	152	152	152	152	152	152	152	152	152	152	152	152	191
Reinforcing Steel	"a"	Size Bar #	16	13	13	16	13	13	16	13	13	13	16	13	13	13
		Spacing	241	279	216	241	279	216	241	279	216	267	241	279	216	267
		Length	4.34m	4.32m	4.32m	4.34m	4.32m	4.32m	4.34m	4.32m	4.32m	4.32m	4.34m	4.32m	4.32m	4.47m
	"b" or "b_1"	Size Bar #	16	19	19	16	19	19	16	19	19	22	16	19	19	22
		Spacing	241	279	216	241	279	216	241	279	216	267	241	279	216	267
		Length "b"	4.11m	4.11m	4.17m	4.11m	4.11m	4.17m	4.11m	4.11m	4.17m	4.19m	4.11m	4.11m	4.17m	4.32m
		Length "b_1"	4.09m	4.14m	4.17m	4.09m	4.14m	4.17m	4.09m	4.11m	4.17m	4.19m	4.11m	4.11m	4.17m	4.32m
	"c"	Size Bar #	13	19	19	13	19	19	13	19	19	22	13	19	19	22
		Spacing	241	279	216	241	279	216	241	279	216	267	241	279	216	267
		Length	1.98m	1.98m	1.98m	1.98m	1.98m	1.98m	1.98m	1.98m	1.98m	1.98m	1.98m	1.98m	1.98m	2.03m
	"d" Dist Bars	Top Slab–Tot. No.	12	6	6	12	6	6	12	6	6	6	12	6	6	6
		Bottom Slab–Tot. No.	6	6	6	6	6	6	6	6	6	6	6	6	6	6
	"e" Bars	Size Bar #	13	13	13	13	13	13	13	13	16	16	13	16	19	19
		Spacing	457	457	406	457	356	216	457	254	241	178	457	279	229	152
	Spacers	Number	30			33			36				36			
Quan.	Concrete: cu m per lin. ft.		0.59	0.69	0.83	0..63	0.73	0.86	.67	.77	.91	.99	0.71	.82	.96	1.12
Quan.	Reinf: kgs per lin. ft.		55	54	67	57	56	70	58	59	74	79	59	62	80	91

NOTE:

For boxes of height less than that shown in table, use next greater table height slabs, wall dimensions and reinforcing steel, and make necessary changes in bar lengths, number of spacers and quantities. Number of "d" bars in table is slab total for both cells.

Revision	By	Approved	Date
ORIGINAL		Kercheval	12/75
Add Metric		T. Stanton	03/03
Reviewed		T. Stanton	04/06

SAN DIEGO REGIONAL STANDARD DRAWING

DOUBLE BOX CULVERT
DETAILS No. 1

RECOMMENDED BY THE SAN DIEGO REGIONAL STANDARDS COMMITTEE

3/01/2003
Chairperson R.C.E. 19246 Date

DRAWING NUMBER D-77E

IMPERIAL TABLE – SPAN 6' (all measuements in feet and/or inches unless otherwise noted).
For Metric Table (1.83m Span) – see drawing D77E

SPAN			6'													
HEIGHT			3'			4'			5'				6'			
STRENGTH CLASSIFICATION			A	B	C	A	B	C	A	B	C	D	A	B	C	D
MAX FILL OVER TOP			4	20	34	4	20	34	4	19	33	43	4	19	33	43
Conc.	Top Slab	T_1	7 1/4	8 1/4	10 1/2	7 1/4	8 1/4	10 1/2	7 1/4	8 1/4	10 1/2	12	7 1/4	8 1/4	10 1/2	12
Conc.	Bottom Slab	T_2	7 1/4	9 1/2	11 1/2	7 1/4	9 1/2	11 1/2	7 1/4	9 1/2	11 1/2	12 3/4	7 1/4	9 1/2	11 1/2	12 3/4
Conc.	Sidewalls	T_3	6	6	6	6	6	6	6	6	6	6	6	6	6	7 1/2
Reinforcing Steel	"a"	Size Bar #	5	4	4	5	4	4	5	4	4	4	5	4	4	4
		Spacing	9 1/2	11	8 1/2	9 1/2	11	8 1/2	9 1/2	11	8 1/2	10 1/2	9 1/2	11	8 1/2	10 1/2
		Length	14–3	14–2	14–2	14–3	14–2	14–2	14–3	14–2	14–2	14–2	14–3	14–2	14–2	14–8
	"b" or "b_1"	Size Bar #	5	6	6	5	6	6	5	6	6	7	5	6	6	7
		Spacing	9 1/2	11	8 1/2	9 1/2	11	8 1/2	9 1/2	11	8 1/2	10 1/2	9 1/2	11	8 1/2	10 1/2
		Length "b"	13–6	13–6	13–8	13–6	13–6	13–8	13–6	13–6	13–8	13–9	13–6	13–6	13–8	14–2
		Length "b_1"	13–5	13–7	13–8	13–5	13–7	13–8	13–5	13–6	13–8	13–9	13–6	13–6	13–8	14–2
	"c"	Size Bar #	4	6	6	4	6	6	4	6	6	7	4	6	6	7
		Spacing	9 1/2	11	8 1/2	9 1/2	11	8 1/2	9 1/2	11	8 1/2	10 1/2	9 1/2	11	8 1/2	10 1/2
		Length	6–6	6–6	6–6	6–6	6–6	6–6	6–6	6–6	6–6	6–6	6–6	6–6	6–6	6–8
	"d" Dist Bars	Top Slab–Tot. No.	12	6	6	12	6	6	12	6	6	6	12	6	6	6
		Bottom Slab–Tot. No.	6	6	6	6	6	6	6	6	6	6	6	6	6	6
	"e" Bars	Size Bar #	4	4	4	4	4	4	4	4	5	5	4	5	6	6
		Spacing	18	18	16	18	14	8 1/2	18	10	9 1/2	7	18	11	9	6
	Spacers	Number	30			33			36				36			
Quan.	Concrete: C.Y. per lin. ft.		0.77	0.90	1.08	0.82	0.96	1.13	0.88	1.01	1.19	1.30	0.93	1.07	1.25	1.47
Quan.	Reinf :lbs per lin. ft.		121	119	147	125	124	155	128	131	164	175	129	137	177	201

NOTE:

For boxes of height less than that shown in table, use next greater table height slabs, wall dimensions and reinforcing steel, and make necessary changes in bar lengths, number of spacers and quantities. Number of "d" bars in table is slab total for both cells.

Revision	By	Approved	Date
ORIGINAL		Kercheval	12/75
Add Metric		T. Stanton	03/03
Reviewed		T. Stanton	04/06

SAN DIEGO REGIONAL STANDARD DRAWING

DOUBLE BOX CULVERT
DETAILS No. 1

RECOMMENDED BY THE SAN DIEGO REGIONAL STANDARDS COMMITTEE

Chairperson R.C.E. 19246 Date 3/10/2003

DRAWING NUMBER D-77F

METRIC TABLE – SPAN 2.44m (all measuements in millimeters unless otherwise noted).
For Imperial table (8' Span) – see drawing D77H

SPAN			2.44m																
HEIGHT			1.22m			1.52m			1.83m			2.13m				2.44m			
STRENGTH CLASSIFICATION			A	B	C	A	B	C	A	B	C	A	B	C	D	A	B	C	D
MAX FILL OVER TOP			914mm	4.27m	7.62m	914mm	4.27m	7.62m	914mm	4.27m	7.62m	914mm	4.27m	7.62m	11.3m	914mm	4.27m	7.62m	11.3m
Conc.	Top Slab	T	216	241	305	216	241	305	216	241	305	216	241	311	362	216	241	311	362
Conc.	Bottom Slab	T_2	191	267	324	191	267	324	191	267	324	191	273	13	15	191	273	13	15
Conc.	Sidewalls	T_3	152	152	152	152	152	152	152	152	152	178	178	178	203	178	178	203	216
Reinforcing Steel	"a"	Size Bar #	19	13	13	19	13	13	19	13	13	19	13	13	13	19	13	13	13
Reinforcing Steel	"a"	Spacing	305	241	267	305	241	254	305	241	254	292	241	254	216	292	241	254	216
Reinforcing Steel	"a"	Length	5.59m	5.54m	5.54m	5.59m	5.54m	5.54m	5.59m	5.54m	5.54m	5.66m	5.61m	5.61m	5.69m	5.66m	5.61m	5.69m	5.74m
Reinforcing Steel	"b"	Size Bar #	19	19	22	19	19	22	19	19	22	19	19	22	22	19	19	22	22
Reinforcing Steel	"b"	Spacing	305	241	267	305	241	254	305	241	254	292	241	254	216	292	241	254	216
Reinforcing Steel	or "b_1"	Length "b"	5.36m	5.38m	5.41m	5.36m	5.38m	5.41m	5.36m	5.38m	5.41m	5.44m	5.44m	5.49m	5.61m	5.44m	5.44m	5.56m	5.64m
Reinforcing Steel	or "b_1"	Length "b_1"	5.31m	5.38m	5.41m	5.31m	5.38m	5.41m	5.31m	5.38m	5.41m	5.44m	5.44m	5.49m	5.61m	5.38m	5.46m	5.49m	5.66m
Reinforcing Steel	"c"	Size Bar #	13	19	22	13	19	22	13	19	22	13	19	22	22	13	19	22	22
Reinforcing Steel	"c"	Spacing	305	241	267	305	241	254	305	241	254	292	241	254	216	292	241	254	216
Reinforcing Steel	"c"	Length	2.59m	2.59m	2.59m	2.59m	2.59m	2.59m	2.59m	2.59m	2.59m	2.62m	2.62m	2.62m	2.64m	2.62m	2.62m	2.64m	2.67m
Reinforcing Steel	"d" Dist Bars	Top Slab–Tot. No.	16	8	8	16	8	8	16	8	8	16	8	8	8	16	8	8	8
Reinforcing Steel	"d" Dist Bars	Bottom Slab–Tot. No.	8	8	8	8	8	8	8	8	8	8	8	8	8	8	8	8	8
Reinforcing Steel	"e" Bars	Size Bar #	13	13	16	13	13	16	13	16	19	13	16	19	22	13	16	22	22
Reinforcing Steel	"e" Bars	Spacing	457	457	267	457	305	254	457	292	254	356	241	191	216	292	216	191	229
Reinforcing Steel	Spacers	Number	41			44			44			47			56	50		60	
Quan.	Concrete: cu m per lin. ft.		.83	.99	1.19	0.87	1.05	1.23	0.91	1.09	1.27	1.00	1.19	1.40	1.64	1.06	1.24	1.52	1.73
Quan.	Reinf: kg per lin. ft.		77	79	91	78	82	99	79	85	104	84	90	113	136	87	94	129	142

NOTE:

For boxes of height less than that shown in table, use next greater table height slabs, wall dimensions and reinforcing steel, and make necessary changes in bar lengths, number of spacers and quantities. Number of "d" bars in table is slab total for both cells.

Revision	By	Approved	Date
ORIGINAL		Kercheval	12/75
Add Metric		T. Stanton	03/03
Reviewed	T. Stanton		04/06

SAN DIEGO REGIONAL STANDARD DRAWING

DOUBLE BOX CULVERT

DETAILS No. 1

RECOMMENDED BY THE SAN DIEGO REGIONAL STANDARDS COMMITTEE

T. Stanton 3/01/2003

Chairperson R.C.E. 19246 Date

DRAWING NUMBER D-77G

IMPERIAL TABLE – SPAN 8' (all measuements in feet and/or inches unless otherwise noted).

For Metric Table (2.44m Span) – see drawing D77G

SPAN			8'																
HEIGHT			4'			5'			6'			7'				8'			
STRENGTH CLASSIFICATION			A	B	C	A	B	C	A	B	C	A	B	C	D	A	B	C	D
MAX FILL OVER TOP			3	14	25	3	14	25	3	14	25	3	14	25	37	3	14	25	37
Conc.	Top Slab	T_1	8 1/2	9 1/2	12	8 1/2	9 1/2	12	8 1/2	9 1/2	12	8 1/2	9 1/2	12 1/4	14 1/4	8 1/2	9 1/2	12 1/4	14 1/4
Conc.	Bottom Slab	T_2	7 1/2	10 1/2	12 3/4	7 1/2	10 1/2	12 3/4	7 1/2	10 1/2	12 3/4	7 1/2	10 3/4	13	15	7 1/2	10 3/4	13	15
Conc.	Sidewalls	T_3	6	6	6	6	6	6	6	6	6	7	7	7	8	7	7	8	8 1/2
Reinforcing Steel	"a"	Size Bar #	6	4	4	6	4	4	6	4	4	6	4	4	4	6	4	4	4
		Spacing	12	9 1/2	10 1/2	12	9 1/2	10	12	9 1/2	10	11 1/2	9 1/2	10	8 1/2	11 1/2	9 1/2	10	8 1/2
		Length	18–4	18–2	18–2	18–4	18–2	18–2	18–4	18–2	18–2	18–7	18–5	18–5	18–8	18–7	18–5	18–8	18–10
	"b" or "b_1"	Size Bar #	6	6	7	6	6	7	6	6	7	6	6	7	7	6	6	7	7
		Spacing	12	9 1/2	10 1/2	12	9 1/2	10	12	9 1/2	10	11 1/2	9 1/2	10	8 1/2	11 1/2	9 1/2	10	8 1/2
		Length "b"	17–7	17–8	17–9	17–7	17–8	17–9	17–7	17–8	17–9	17–10	17–10	18–0	18–5	17–10	17–10	18–3	18–6
		Length "b_1"	17–5	17–8	17–9	17–5	17–8	17–9	17–5	17–8	17–9	17–10	17–10	18–0	18–5	17–8	17–11	18–0	18–7
	"c"	Size Bar #	4	6	7	4	6	7	4	6	7	4	6	7	7	4	6	7	7
		Spacing	12	9 1/2	10 1/2	12	9 1/2	10	12	9 1/2	10	11 1/2	9 1/2	10	8 1/2	11 1/2	9 1/2	10	8 1/2
		Length	8–6	8–6	8–6	8–6	8–6	8–6	8–6	8–6	8–6	8–7	8–7	8–7	8–8	8–7	8–7	8–8	8–9
	"d" Dist Bars	Top Slab–Tot. No.	16	8	8	16	8	8	16	8	8	16	8	8	8	16	8	8	8
		Bottom Slab–Tot. No.	8	8	8	8	8	8	8	8	8	8	8	8	8	8	8	8	8
	"e" Bars	Size Bar #	4	4	5	4	4	5	4	5	6	4	5	6	7	4	5	7	7
		Spacing	18	18	10 1/2	18	12	10	18	11 1/2	10	14	9 1/2	7 1/2	8 1/2	11 1/2	8 1/2	7 1/2	9
	Spacers	Number	41			44			44			47			56	50		60	
Quan.	Concrete: C.Y. per lin. ft.		1.08	1.30	1.55	1.14	1.37	1.61	1.19	1.42	1.66	1.32	1.56	1.83	2.14	1.39	1.62	1.99	2.27
Quan.	Reinf :lbs per lin. ft.		169	175	200	172	181	218	173	188	229	185	199	248	299	191	207	284	314

NOTE:

For boxes of height less than that shown in table, use next greater table height slabs, wall dimensions and reinforcing steel, and make necessary changes in bar lengths, number of spacers and quantities. Number of "d" bars in table is slab total for both cells.

Revision	By	Approved	Date
ORIGINAL		Kercheval	12/75
Add Metric		T. Stanton	03/03
Reviewed		T. Stanton	04/06

SAN DIEGO REGIONAL STANDARD DRAWING

DOUBLE BOX CULVERT
DETAILS No. 1

RECOMMENDED BY THE SAN DIEGO REGIONAL STANDARDS COMMITTEE

Chairperson R.C.E. 19246 Date 3/10/2003

DRAWING NUMBER D-77H

METRIC TABLE – SPAN 3.05m (all measuements in millimeters unless otherwise noted).
For Imperial table (10' Span) – see drawing D77J

SPAN			3.05m																
HEIGHT			1.52m			1.83m			2.13m			2.44m				3.05m			
STRENGTH CLASSIFICATION			A	B	C	A	B	C	A	B	C	A	B	C	D	A	B	C	D
MAX FILL OVER TOP			610mm	5.18m	9.14m	610mm	5.18m	9.14m	610mm	5.18m	9.14m	610mm	4.88m	8.84m	11m	610mm	4.88m	8.84m	11m
Conc.	Top Slab	T	222	324	406	222	324	406	222	324	406	222	324	406	438	222	324	406	445
Conc.	Bottom Slab	T_2	210	343	419	210	343	419	210	349	425	222	343	419	464	222	343	419	470
Conc.	Sidewalls	T_3	152	152	152	152	152	152	152	165	179	179	179	191	191	203	203	229	254
Reinforcing Steel	"a"	Size Bar #	19	13	13	19	13	13	19	13	13	19	13	13	13	19	13	13	13
		Spacing	279	254	254	279	241	254	279	241	254	279	254	254	229	279	254	254	229
		Length	6.81m	6.76m	6.76m	6.81m	6.76m	6.76m	6.81m	6.81m	6.83m	6.88m	6.83m	6.88m	6.96m	6.96m	6.91m	6.99m	7.06m
	"b" or "b_1"	Size Bar #	19	22	25	19	22	25	19	22	25	19	22	25	25	19	22	25	25
		Spacing	279	254	254	279	241	254	279	241	254	279	254	254	229	279	254	254	229
		Length "b"	6.58m	6.65m	6.71m	6.58m	6.65m	6.71m	6.58m	6.68m	6.78m	6.65m	6.73m	6.81m	6.93m	6.73m	6.81m	6.93m	7.04m
		Length "b_1"	6.53m	6.65m	6.71m	6.53m	6.65m	6.71m	6.53m	6.68m	6.78m	6.63m	6.71m	6.81m	6.93m	6.71m	6.78m	6.91m	7.06m
	"c"	Size Bar #	19	22	25	19	22	25	19	22	25	19	22	25	25	19	22	25	25
		Spacing	279	254	254	279	241	254	279	241	254	279	254	254	229	279	254	254	229
		Length	3.20m	3.20m	3.20m	3.20m	3.20m	3.20m	3.20m	3.23m	3.23m	3.23m	3.23m	3.25m	3.28m	3.25m	3.25m	3.28m	3.30m
	"d" Dist Bars	Top Slab–Tot. No.	10	10	10	10	10	10	18	10	10	18	10	10	10	18	10	10	10
		Bottom Slab–Tot. No.	10	10	10	10	10	10	10	10	10	10	10	10	10	10	10	10	10
	"e" Bars	Size Bar #	13	13	16	13	13	16	13	13	19	13	16	19	22	13	19	19	22
		Spacing	457	254	254	457	152	165	356	152	203	279	216	152	152	191	178	140	127
	Spacers	Number	48			48			51			54			64	68			
Quan.	Concrete: cu m per lin. ft.		1.07	1.57	1.88	1.10	1.58	1.90	1.15	1.67	2.02	1.28	1.74	2.09	2.32	1.47	1.92	2.33	2.61
Quan.	Reinf: kg per lin. ft.		107	115	141	108	124	147	110	127	154	114	126	161	195	127	148	181	216

NOTE:

For boxes of height less than that shown in table, use next greater table height slabs, wall dimensions and reinforcing steel, and make necessary changes in bar lengths, number of spacers and quantities. Number of "d" bars in table is slab total for both cells.

Revision	By	Approved	Date
ORIGINAL		Kercheval	12/75
Add Metric		T. Stanton	03/03
Reviewed		T. Stanton	04/06

SAN DIEGO REGIONAL STANDARD DRAWING

DOUBLE BOX CULVERT
DETAILS No. 1

RECOMMENDED BY THE SAN DIEGO REGIONAL STANDARDS COMMITTEE

Chairperson R.C.E. 19246 Date 3/10/2003

DRAWING NUMBER D-771

IMPERIAL TABLE – SPAN 10' (all measuements in feet and/or inches unless otherwise noted).

For Metric Table (3.05m Span) – see drawing D77I

SPAN			10'																
HEIGHT			5'			6'			7'			8'				10'			
STRENGTH CLASSIFICATION			A	B	C	A	B	C	A	B	C	A	B	C	D	A	B	C	D
MAX FILL OVER TOP			2	17	30	2	17	30	2	17	30	2	16	29	36	2	16	29	36
Conc.	Top Slab	T_1	8 3/4	12 3/4	16	8 3/4	12 3/4	16	8 3/4	12 3/4	16	8 3/4	12 3/4	16	17 1/4	8 3/4	12 3/4	16	17 1/2
Conc.	Bottom Slab	T_2	8 1/4	13 1/2	16 1/2	8 1/4	13 1/2	16 1/2	8 1/4	13 3/4	16 3/4	8 3/4	13 1/2	16 1/2	18 1/4	8 3/4	13 1/2	16 1/2	18 1/2
Conc.	Sidewalls	T_3	6	6	6	6	6	6	6	6 1/2	7	7	7	7 1/2	7 1/2	8	8	9	10
Reinforcing Steel	"a"	Size Bar #	6	4	4	6	4	4	6	4	4	6	4	4	4	6	4	4	4
Reinforcing Steel	"a"	Spacing	11	10	10	11	9 1/2	10	11	9 1/2	10	11	10	10	9	11	10	10	9
Reinforcing Steel	"a"	Length	22–4	22–2	22–2	22–4	22–2	22–2	22–4	22–4	22–5	22–7	22–5	22–7	22–10	22–10	22–8	22–11	23–2
Reinforcing Steel	"b" or "b_1"	Size Bar #	6	7	8	6	7	8	6	7	8	6	7	8	8	6	7	8	8
Reinforcing Steel	"b" or "b_1"	Spacing	11	10	10	11	9 1/2	10	11	9 1/2	10	11	10	10	9	11	10	10	9
Reinforcing Steel	"b" or "b_1"	Length "b"	21–7	21–10	22–0	21–7	21–10	22–0	21–7	21–11	22–3	21–10	22–1	22–4	22–9	22–1	22–4	22–9	23–1
Reinforcing Steel	"b" or "b_1"	Length "b_1"	21–5	21–10	22–0	21–5	21–10	22–0	21–5	21–11	22–3	21–9	22–0	22–4	22–9	22–0	22–3	22–8	23–2
Reinforcing Steel	"c"	Size Bar #	6	7	8	6	7	8	6	7	8	6	7	8	8	6	7	8	8
Reinforcing Steel	"c"	Spacing	11	10	10	11	9 1/2	10	11	9 1/2	10	11	10	10	9	11	10	10	9
Reinforcing Steel	"c"	Length	10–6	10–6	10–6	10–6	10–6	10–6	10–6	10–7	10–7	10–7	10–7	10–8	10–9	10–8	10–8	10–9	10–10
Reinforcing Steel	"d" Dist Bars	Top Slab–Tot. No.	18	10	10	18	10	10	18	10	10	18	10	10	10	18	10	10	10
Reinforcing Steel	"d" Dist Bars	Bottom Slab–Tot. No.	10	10	10	10	10	10	10	10	10	10	10	10	10	10	10	10	10
Reinforcing Steel	"e" Bars	Size Bar #	4	4	5	4	4	5	4	4	6	4	5	6	7	4	6	6	7
Reinforcing Steel	"e" Bars	Spacing	18	10	10	18	6	6 1/2	14	6	8	11	8 1/2	6	6	7 1/2	7	5 1/2	5
Reinforcing Steel	Spacers	Number	48			48			51			54			64	68			
Quan.	Concrete: C.Y. per lin. ft.		1.40	2.05	2.46	1.45	2.07	2.48	1.51	2.18	2.64	1.68	2.27	2.74	3.04	1.92	2.51	3.05	3.41
Quan.	Reinf :lbs per lin. ft.		236	254	310	238	274	324	243	280	339	252	278	355	430	279	327	400	476

NOTE:
For boxes of height less than that shown in table, use next greater table height slabs, wall dimensions and reinforcing steel, and make necessary changes in bar lengths, number of spacers and quantities. Number of "d" bars in table is slab total for both cells.

Revision	By	Approved	Date
ORIGINAL		Kercheval	12/75
Add Metric		T. Stanton	03/03
Reviewed	T. Stanton		03/03

SAN DIEGO REGIONAL STANDARD DRAWING

DOUBLE BOX CULVERT

DETAILS No. 1

RECOMMENDED BY THE SAN DIEGO REGIONAL STANDARDS COMMITTEE

Chairperson R.C.E. 19246 Date 3/10/2003

DRAWING NUMBER **D-77J**

Revision	By	Approved	Date
ORIGINAL		Kercheval	12/75
Add Metric		T. Stanton	03/03
Reviewed		T. Stanton	04/06

SAN DIEGO REGIONAL STANDARD DRAWING

DOUBLE BOX CULVERT
DETAILS No. 1

RECOMMENDED BY THE SAN DIEGO REGIONAL STANDARDS COMMITTEE

Chairperson R.C.E. 19246 Date 3/10/2003

DRAWING NUMBER **D-77K**

METRIC TABLE – SPAN 3.66M (all measurements in millimeters unless otherwise noted).

For Imperial Table (12' Span) – See Drawing D-77L

SPAN			3.66m																			
HEIGHT			1.83m			2.13m			2.44m			2.74m				3.05m				3.66m			
STRENGTH CLASSIFICATION			A	B	C	A	B	C	A	B	C	A	B	C	D	A	B	C	D	A	B	C	D
MAX FILL OVER TOP			610mm	4.27m	7.9m	610mm	4.27m	7.9m	610mm	4.27m	7.9m	610mm	4.27m	7.9m	11m	610mm	4.27m	7.9m	11m	610mm	4.27m	7.9m	11m
Conc.	Top Slab	T_1	254	356	445	254	362	445	260	362	451	260	368	451	527	260	368	451	527	260	368	464	540
Conc.	Bottom Slab	T_2	235	375	457	235	381	464	248	381	470	254	387	476	540	260	387	476	546	267	387	489	559
Conc.	Sidewalls	T_3	152	152	165	178	178	178	203	203	216	229	229	229	254	229	229	241	279	229	254	279	305
Reinforcing Steel	"a"	Size Bar #	19	13	13	19	13	13	19	13	13	19	13	13	13	19	13	13	13	19	13	13	13
		Spacing	229	292	229	229	292	229	229	279	216	229	279	216	229	229	279	216	229	229	279	216	229
		Length	8.03m	7.98m	8.03m	8.10m	8.05m	8.05m	8.18m	8.13m	8.18m	8.26m	8.20	8.20	8.26m	8.26m	8.20	8.31m	8.36m	8.26m	8.28m	8.36m	8.43m
	"b" or "b_1"	Size Bar #	19	25	25	19	25	25	19	25	25	19	25	25	29	19	25	25	29	19	25	25	29
		Spacing	229	292	229	229	292	229	229	279	216	229	279	216	229	229	279	216	229	229	279	216	229
		Length "b"	7.82m	7.87m	8.00m	7.90m	7.95m	8.03m	7.98m	8.03m	8.15m	8.05m	8.13m	8.18m	8.33m	8.05m	8.13m	8.28m	8.38m	8.05m	8.20	8.36m	8.48m
		Length "b_1"	7.77m	7.87m	8.00m	7.85m	7.98m	8.03m	7.95m	8.05m	8.15m	8.03m	8.13m	8.20	8.33m	8.03m	8.13m	8.28m	8.41m	8.03m	8.20	8.36m	8.51m
	"c"	Size Bar #	16	25	25	16	25	25	16	25	25	16	25	25	29	16	25	25	29	16	25	25	29
		Spacing	229	292	229	229	292	229	229	279	216	229	279	216	229	229	279	216	229	229	279	216	229
		Length	3.81m	3.81m	3.84m	3.84m	3.84m	3.84m	3.86m	3.86m	3.89m	3.89m	3.89m	3.89m	3.91m	3.89m	3.89m	3.91m	3.94m	3.89m	3.91m	3.94m	3.96m
	"d" Dist Bars	Top Slab–Tot. No.	24	10	10	24	10	10	24	10	10	24	10	10	10	24	10	10	10	24	10	10	10
		Bottom Slab–Tot. No.	10	10	10	10	10	10	10	10	10	10	10	10	10	10	10	10	10	10	10	10	10
	"e" Bars	Size Bar #	13	13	16	13	13	16	13	13	16	13	16	22	25	13	22	25	25	19	22	25	29
		Spacing	457	203	203	381	152	165	305	140	152	229	191	216	203	216	11	216	229	305	203	178	178
	Spacers	Number	52			55			68			68				72				76			
Quan.	Concrete: cu m per lin. ft.		1.41	1.98	2.42	1.51	2.12	2.51	1.67	2.24	2.74	1.82	.57	2.82	3.25	1.90	2.47	2.95	3.43	2.04	2.70	3.29	3.76
Quan.	Reinf: kg per lin. ft.		140	144	182	142	150	188	152	165	209	156	170	211	262	159	179	235	264	168	194	257	305

NOTE:

For boxes of height less than that shown in table, use next greater table height slabs, wall dimensions and reinforcing steel, and make necessary changes in bar lengths, number of spacers and quantities. Number of "d" bars in table is slab total for both cells.

IMPERIAL TABLE – SPAN 12' (all measuements in feet and/or inches unless otherwise noted).

For Metric Table (3.66m Span) – see drawing D77K

SPAN			12'																			
HEIGHT			6'			7'			8'			9'				10'				12'			
STRENGTH CLASSIFICATION			A	B	C	A	B	C	A	B	C	A	B	C	D	A	B	C	D	A	B	C	D
MAX FILL OVER TOP			2	14	26	2	14	26	2	14	26	2	14	26	36	2	14	26	36	2	14	26	36
Conc.	Top Slab	T_1	10	14	17 1/2	10	14 1/4	17 1/2	10 1/4	14 1/4	17 3/4	10 1/4	14 1/2	17 3/4	20 3/4	10 1/4	14 1/2	17 3/4	20 3/4	10 1/4	14 1/2	18 1/4	21 1/4
Conc.	Bottom Slab	T_2	9 1/4	14 3/4	18	9 1/4	15	18 1/4	9 3/4	15	18 1/2	10	15 1/4	18 3/4	21 1/4	10 1/4	15 1/4	18 3/4	21 1/2	10 1/2	15 1/4	19 1/4	22
Conc.	Sidewalls	T_3	6	6	6 1/2	7	7	7	8	8	8 1/2	9	9	9	10	9	9	9 1/2	11	9	10	11	12
Reinforcing Steel	"a"	Size Bar #	6	4	4	6	4	4	6	4	4	6	4	4	4	6	4	4	4	6	4	4	4
		Spacing	9	11 1/2	9	9	11 1/2	9	9	11	8 1/2	9	11	8 1/2	9	9	11	8 1/2	9	9	11	8 1/2	9
		Length	26–4	26–2	26–4	26–7	26–5	26–5	26–10	26–8	26–10	27–1	26–11	26–11	27–1	27–1	26–11	27–3	27–5	27–1	27–2	27–5	27–8
	"b" or "b_1"	Size Bar #	6	8	8	6	8	8	6	8	8	6	8	8	9	6	8	8	9	6	8	8	9
		Spacing	9	11 1/2	9	9	11 1/2	9	9	11	8 1/2	9	11	8 1/2	9	9	11	8 1/2	9	9	11	8 1/2	9
		Length "b"	25–8	25–10	26–3	25–11	26–1	26–4	26–2	26–4	26–9	26–5	26–8	26–10	27–4	26–5	26–8	27–2	27–6	26–5	26–11	27–5	27–10
		Length "b_1"	25–6	25–10	26–3	25–9	26–2	26–4	26–1	26–5	26–9	26–4	26–8	26–11	27–4	26–4	26–8	27–2	27–7	26–4	26–11	27–5	27–11
	"c"	Size Bar #	5	8	8	5	8	8	5	8	8	5	8	8	9	5	8	8	9	5	8	8	9
		Spacing	9	11 1/2	9	9	11 1/2	9	9	11	8 1/2	9	11	8 1/2	9	9	11	8 1/2	9	9	11	8 1/2	9
		Length	12–6	12–6	12–7	12–7	12–7	12–7	12–8	12–8	12–9	12–9	12–9	12–9	12–10	12–9	12–9	12–10	12–11	12–9	12–10	12–11	13–0
	"d" Dist Bars	Top Slab–Tot. No.	24	10	10	24	10	10	24	10	10	24	10	10	10	24	10	10	10	24	10	10	10
		Bottom Slab–Tot. No.	10	10	10	10	10	10	10	10	10	10	10	10	10	10	10	10	10	10	10	10	10
	"e" Bars	Size Bar #	4	4	5	4	4	5	4	4	5	4	5	7	8	4	7	8	8	6	7	8	9
		Spacing	18	8	8	15	6	6 1/2	12	5 1/2	6	9	7 1/2	8 1/2	8	8 1/2	11	8 1/2	9	12	8	7	7
	Spacers	Number	52			55			68			68				72				76			
Quan.	Concrete: C.Y. per lin. ft.		1.84	2.59	3.16	1.97	2.77	3.28	2.19	2.93	3.59	2.38	0.74	3.69	4.25	2.48	3.23	3.86	4.49	2.67	3.53	4.30	4.92
Quan.	Reinf :lbs per lin. ft.		309	317	401	316	330	415	336	363	460	345	374	485	578	351	394	519	582	371	427	567	673

NOTE:

For boxes of height less than that shown in table, use next greater table height slabs, wall dimensions and reinforcing steel, and make necessary changes in bar lengths, number of spacers and quantities. Number of "d" bars in table is slab total for both cells.

Revision	By	Approved	Date
ORIGINAL		Kercheval	12/75
Add Metric		T. Stanton	03/03
Reviewed	T. Stanton	T. Stanton	04/06

SAN DIEGO REGIONAL STANDARD DRAWING

DOUBLE BOX CULVERT
DETAILS No. 1

RECOMMENDED BY THE SAN DIEGO REGIONAL STANDARDS COMMITTEE

Chairperson R.C.E. 19246 Date 3/10/2003

DRAWING NUMBER D-77L

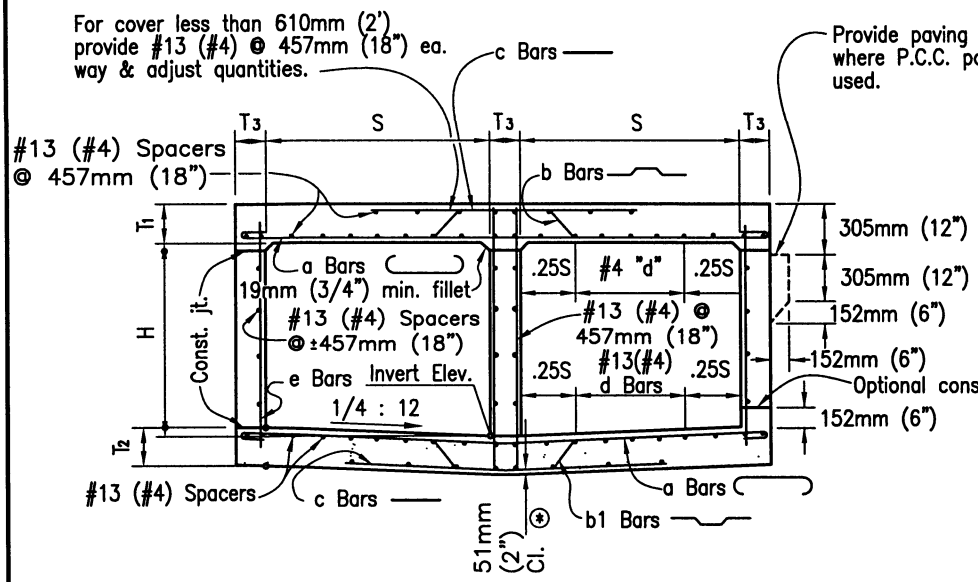

TYPICAL SECTION

(Showing reinforcement for interior walls 203mm (8") and over.)

⊛ For reinforcement clearance, except at bottom, see "Miscellaneous Details."

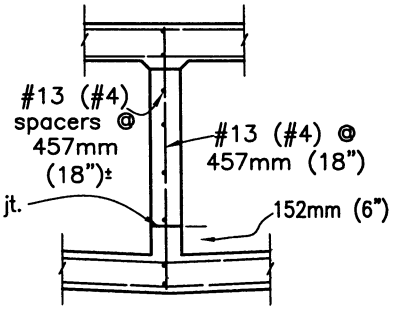

Reinforcement for interior walls under 203mm (8").

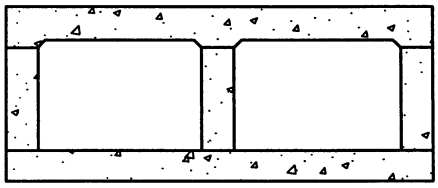

"FLAT INVERT" ALTERNATIVE

(When shown)

Revision	By	Approved	Date
ORIGINAL		Kercheval	12/75
Add Metric		T. Stanton	03/03
Reviewed		T. Stanton	04/06

SAN DIEGO REGIONAL STANDARD DRAWING

DOUBLE BOX CULVERT DETAILS NO. 2

RECOMMENDED BY THE SAN DIEGO REGIONAL STANDARDS COMMITTEE

T. Stanton 3/10/2003

Chairperson R.C.E. 19246 Date

DRAWING NUMBER **D-77M**

This drawing is NOT in conformance with latest UBC and should be used with care and judgment.

METRIC TABLE – SPAN 1.22m (all measuements in millimeters unless otherwise noted).

For Imperial table (4' Span) – see drawing D78B

SPAN			1.22m								
HEIGHT			610mm			914mm			1.22m		
STRENGTH CLASSIFICATION			A	B	C	A	B	C	A	B	C
MAX FILL OVER TOP			3m	7.3m	11.6m	3m	7.3m	11.6m	3m	7.3m	11.6m
Conc.	Top Slab	T_1	159	159	184	159	159	184	159	159	184
Conc.	Bottom Slab	T_2	152	178	210	152	178	210	152	178	210
Conc.	Sidewalls	T_3	152	152	152	152	152	152	152	152	152
Reinforcing Steel	"a"	Size Bar #	16	13	16	16	13	16	16	13	16
		Spacing	279	286	330	279	286	330	279	286	330
		Length	4.50m	4.47m	4.50m	4.50m	4.47m	4.50m	4.50m	4.47m	4.50m
	"b" or "b_1"	Size Bar #	16	16	19	16	16	19	16	16	19
		Spacing	279	286	330	279	286	330	279	286	330
		Length "b"	4.32m	4.32m	4.34m	4.32m	4.32m	4.34m	4.32m	4.32m	4.34m
		Length "b_1"	4.27m	4.32m	4.34m	4.27m	4.32m	4.34m	4.27m	4.32m	4.34m
	"c"	Size Bar #	13	16	19	13	16	19	13	16	19
		Spacing	279	286	330	279	286	330	279	286	330
		Length	2.74m	2.74m	2.74m	2.74m	2.74m	2.74m	2.74m	2.74m	2.74m
	"d" Dist Bars	Top Slab–Tot. No.	15	9	9	15	9	9	15	9	9
		Bottom Slab–Tot. No.	9	9	9	9	9	9	9	9	9
	"e" Bars	Size Bar #	13	13	13	13	13	13	13	13	16
		Spacing	457	457	457	457	457	330	457	286	330
	Spacers	Number	34			38			42		
Quan.	Concrete: cu m per lin. ft.		0.51	0.54	0.62	0.57	0.60	0.68	0.63	0.66	0.73
	Reinf: kg per lin. ft.		55	50	60	58	52	63	59	55	67

Note

For boxes of height less than that shown in table, use next greater table height slabs, wall dimensions and reinforcing steel, and make necessary changes in bar lengths, number of spacers and quantities. Number of "d" bars in table is slab total for both cells.

Revision	By	Approved	Date
ORIGINAL		Kercheval	12/75
Add Metric		T. Stanton	03/03

SAN DIEGO REGIONAL STANDARD DRAWING

TRIPLE BOX CULVERT

DETAILS No. 1

RECOMMENDED BY THE SAN DIEGO REGIONAL STANDARDS COMMITTEE

Chairperson R.C.E. 19246 Date 3/01/2003

DRAWING NUMBER D-78A

IMPERIAL TABLE – SPAN 4' (all measuements in feet and/or inches).

For Metric table (1.22m Span) – see drawing D78A

SPAN			4'								
HEIGHT			2'			3'			4'		
STRENGTH CLASSIFICATION			A	B	C	A	B	C	A	B	C
MAX FILL OVER TOP			10	24	38	10	24	38	10	24	38
Conc.	Top Slab	T_1	6 1/4	6 1/4	7 1/4	6 1/4	6 1/4	7 1/4	6 1/4	6 1/4	7 1/4
Conc.	Bottom Slab	T_2	6	7	8 1/4	6	7	8 1/4	6	7	8 1/4
Conc.	Sidewalls	T_3	6	6	6	6	6	6	6	6	6
Reinforcing Steel	"a"	Size Bar #	5	4	5	5	4	5	5	4	5
		Spacing	11	11 1/2	13	11	11 1/2	13	11	11 1/2	13
		Length	14–9	14–8	14–9	14–9	14–8	14–9	14–9	14–8	14–9
	"b" or "b_1"	Size Bar #	5	5	6	5	5	6	5	5	6
		Spacing	11	11 1/2	13	11	11 1/2	13	11	11 1/2	13
		Length "b"	14–2	14–2	14–3	14–2	14–2	14–3	14–2	14–2	14–3
		Length "b_1"	14–0	14–2	14–3	14–0	14–2	14–3	14–0	14–2	14–3
	"c"	Size Bar #	4	5	6	4	5	6	4	5	6
		Spacing	11	11 1/2	13	11	11 1/2	13	11	11 1/2	13
		Length	9–0	9–0	9–0	9–0	9–0	9–0	9–0	9–0	9–0
	"d" Dist Bars	Top Slab–Tot. No.	15	9	9	15	9	9	15	9	9
		Bottom Slab–Tot. No.	9	9	9	9	9	9	9	9	9
	"e" Bars	Size Bar #	4	4	4	4	4	4	4	4	5
		Spacing	18	18	18	18	18	13	18	11 1/2	13
	Spacers	Number		34			38			42	
Quan.	Concrete: C.Y. per lin. ft.		0.67	0.71	0.81	0.75	0.79	0.89	0.82	0.86	0.96
	Reinf :lbs per lin. ft.		122	110	133	127	115	138	131	122	147

Note

For boxes of height less than that shown in table, use next greater table height slabs, wall dimensions and reinforcing steel, and make necessary changes in bar lengths, number of spacers and quantities. Number of "d" bars in table is slab total for both cells.

This drawing is NOT in conformance with latest UBC and should be used with care and judgment.

Revision	By	Approved	Date
ORIGINAL		Kercheval	12/75
Add Metric		T. Stanton	03/03

SAN DIEGO REGIONAL STANDARD DRAWING

TRIPLE BOX CULVERT

DETAILS No. 1

RECOMMENDED BY THE SAN DIEGO REGIONAL STANDARDS COMMITTEE

Chairperson R.C.E. 19246 Date 3/10/2003

DRAWING NUMBER D-78B

Revision	By	Approved	Date
ORIGINAL		Kercheval	12/75
Add Metric		T. Stanton	03/03

SAN DIEGO REGIONAL STANDARD DRAWING

TRIPLE BOX CULVERT

DETAILS No. 1

RECOMMENDED BY THE SAN DIEGO REGIONAL STANDARDS COMMITTEE

3/10/2003

Chairperson R.C.E. 19246 Date

DRAWING NUMBER D-78C

This drawing is NOT in conformance with latest UBC and should be used with care and judgment.

METRIC TABLE – SPAN 1.52m (all measuements in millimeters unless otherwise noted).

For Imperial table (5' Span) – see drawing D78B

SPAN			1.52m													
HEIGHT			610mm			914mm			1.22m				1.52m			
STRENGTH CLASSIFICATION			A	B	C	A	B	C	A	B	C	D	A	B	C	D
MAX FILL OVER TOP			2.4m	5.2m	7.9m	2.4m	5.2m	7.9m	2.4m	5.2m	7.9m	10.7m	2.4m	5.2m	7.9m	10.7m
Conc.	Top Slab	T_1	171	171	191	171	171	191	171	171	191	216	171	171	191	216
Conc.	Bottom Slab	T_2	159	184	216	159	184	216	159	184	216	241	159	191	216	241
Conc.	Sidewalls	T_3	152	152	152	152	152	152	152	152	152	152	152	152	152	152
Reinforcing Steel	"a"	Size Bar #	16	13	16	16	13	16	5	4	5	5	5	4	5	5
		Spacing	254	286	330	254	286	330	254	279	330	286	254	279	330	286
		Length	5.41m	5.38m	5.41m	5.41m	5.38m	5.41m	5.41m	5.38m	5.41m	5.41m	5.41m	5.38m	5.41m	5.41m
	"b" or "b_1"	Size Bar #	16	16	19	16	16	19	16	16	19	19	16	16	19	19
		Spacing	254	286	13	254	286	330	254	279	330	286	254	279	330	286
		Length "b"	5.26m	5.26m	5.26m	5.26m	5.26m	5.26m	5.26m	5.26m	5.26m	5.26m	5.26m	5.26m	5.26m	5.31m
		Length "b_1"	5.18m	5.23m	5.28m	5.18m	5.23m	5.28m	5.18m	5.23m	5.28m	5.31m	5.18m	5.23m	5.28m	5.31m
	"c"	Size Bar #	13	16	19	13	16	19	13	16	19	19	13	16	19	19
		Spacing	254	286	330	254	286	330	254	279	330	286	254	279	330	286
		Length	3.35m	3.35m	3.35m	3.35m	3.35m	3.35m	3.35m	3.35m	3.35m	3.35m	3.35m	3.35m	3.35m	3.35m
	"d" Dist Bars	Top Slab–Tot. No.	18	9	9	18	9	9	18	9	9	9	18	9	9	9
		Bottom Slab–Tot. No.	9	9	9	9	9	9	9	9	9	9	9	9	9	9
	"e" Bars	Size Bar #	13	13	13	13	13	13	13	13	13	16	13	13	13	19
		Spacing	457	457	457	457	457	457	457	432	286	286	457	279	102	286
	Spacers	Number	34			38			38				42			
Quan.	Concrete: cu m per lin. ft.		0.63	0.66	0.75	0.69	0.73	0.80	0.74	0.78	0.86	0.94	0.80	0.85	0.92	1.00
	Reinf: kg per lin. ft.		68	57	69	70	59	71	71	62	73	82	73	65	78	87

Note

For boxes of height less than that shown in table, use next greater table height slabs, wall dimensions and reinforcing steel, and make necessary changes in bar lengths, number of spacers and quantities. Number of "d" bars in table is slab total for both cells.

IMPERIAL TABLE – SPAN 5' (all measuements in feet and/or inches).

For Metric table (1.52m Span) – see drawing D78C

SPAN			5'													
HEIGHT			2'			3'			4'				5'			
STRENGTH CLASSIFICATION			A	B	C	A	B	C	A	B	C	D	A	B	C	D
MAX FILL OVER TOP			8	17	26	8	17	26	8	17	26	35	8	17	26	35
Conc.	Top Slab	T_1	6 3/4	6 3/4	7 1/2	6 3/4	6 3/4	7 1/2	6 3/4	6 3/4	7 1/2	8 1/2	6 3/4	6 3/4	7 1/2	8 1/2
Conc.	Bottom Slab	T_2	6 1/4	7 1/4	8 1/2	6 1/4	7 1/4	8 1/2	6 1/4	7 1/4	8 1/2	9 1/2	6 1/4	7 1/2	8 1/2	9 1/2
Conc.	Sidewalls	T_3	6	6	6	6	6	6	6	6	6	6	6	6	6	6
Reinforcing Steel	"a"	Size Bar #	5	4	5	5	4	5	5	4	5	5	5	4	5	5
		Spacing	10	11 1/2	13	10	11 1/2	13	10	11	13	11 1/2	10	11	13	11 1/2
		Length	17–9	17–8	17–9	17–9	17–8	17–9	17–9	17–8	17–9	17–9	17–9	17–8	17–9	17–9
	"b" or "b_1"	Size Bar #	5	5	6	5	5	6	5	5	6	6	5	5	6	6
		Spacing	10	11 1/2	13	10	11 1/2	13	10	11	13	11 1/2	10	11	13	11 1/2
		Length "b"	17–3	17–3	17–3	17–3	17–3	17–3	17–3	17–3	17–3	17–3	17–3	17–3	17–3	17–5
		Length "b_1"	17–0	17–2	17–4	17–0	17–2	17–4	17–0	17–2	17–4	17–5	17–0	17–2	17–4	17–5
	"c"	Size Bar #	4	5	6	4	5	6	4	5	6	6	4	5	6	6
		Spacing	10	11 1/2	13	10	11 1/2	13	10	11	13	11 1/2	10	11	13	11 1/2
		Length	11–0	11–0	11–0	11–0	11–0	11–0	11–0	11–0	11–0	11–0	11–0	11–0	11–0	11–0
	"d" Dist Bars	Top Slab–Tot. No.	18	9	9	18	9	9	18	9	9	9	18	9	9	9
		Bottom Slab–Tot. No.	9	9	9	9	9	9	9	9	9	9	9	9	9	9
	"e" Bars	Size Bar #	4	4	4	4	4	4	4	4	4	5	4	4	4	6
		Spacing	18	18	18	18	18	18	18	17	11 1/2	11 1/2	18	11	4	11 1/2
	Spacers	Number	34			38			38				42			
Quan.	Concrete: C.Y. per lin. ft.		0.82	0.87	0.98	0.90	0.95	1.05	0.97	1.02	1.13	1.23	1.04	1.11	1.20	1.31
Quan.	Reinf :lbs per lin. ft.		150	126	153	155	130	157	157	136	161	181	161	143	171	192

Note

For boxes of height less than that shown in table, use next greater table height slabs, wall dimensions and reinforcing steel, and make necessary changes in bar lengths, number of spacers and quantities. Number of "d" bars in table is slab total for both cells.

This drawing is NOT in conformance with latest UBC and should be used with care and judgment.

Revision	By	Approved	Date
ORIGINAL		Kercheval	12/75
Add Metric		T. Stanton	03/03

SAN DIEGO REGIONAL STANDARD DRAWING

TRIPLE BOX CULVERT

DETAILS No. 1

RECOMMENDED BY THE SAN DIEGO REGIONAL STANDARDS COMMITTEE

Chairperson R.C.E. 19246 Date 3/10/2003

DRAWING NUMBER D-78D

METRIC TABLE – SPAN 1.83m (all measuements in millimeters unless otherwise noted).
For Imperial table (6' Span) – see drawing D78F

SPAN			1.83m													
HEIGHT			914mm			1.22m			1.52m				1.83m			
STRENGTH CLASSIFICATION			A	B	C	A	B	C	A	B	C	D	A	B	C	D
MAX FILL OVER TOP			1.2m	6.1m	10.4m	1.2m	6.1m	10.4m	1.2m	5.8m	10m	13.1m	1.2m	5.8m	10m	13.1m
Conc.	Top Slab	T_1	184	210	267	184	210	267	184	210	267	305	184	210	267	305
Conc.	Bottom Slab	T_2	184	241	292	184	241	292	184	241	292	324	184	241	292	324
Conc.	Sidewalls	T_3	152	152	152	152	152	152	152	152	152	152	152	152	152	191
Reinforcing Steel	"a"	Size Bar #	16	13	13	16	13	13	16	13	13	13	16	13	13	13
		Spacing	241	279	216	241	279	216	241	279	216	267	241	279	216	267
		Length	4.34m	4.32m	4.32m	4.34m	4.32m	4.32m	4.34m	4.32m	4.32m	4.32m	4.34m	4.32m	4.32m	4.47m
	"b" or "b_1"	Size Bar #	16	19	19	16	19	19	16	19	19	22	16	19	19	22
		Spacing	241	279	216	241	279	216	241	279	216	267	241	279	216	267
		Length "b"	4.11m	4.11m	4.17m	4.11m	4.11m	4.17m	4.11m	4.11m	4.17m	4.19m	4.11m	4.11m	4.17m	4.32m
		Length "b_1"	4.09m	4.14m	4.17m	4.09m	4.14m	4.17m	4.09m	4.11m	4.17m	4.19m	4.11m	4.11m	4.17m	4.32m
	"c"	Size Bar #	13	19	19	13	19	19	13	19	19	22	13	19	19	22
		Spacing	241	279	216	241	279	216	241	279	216	267	241	279	216	267
		Length	1.98m	1.98m	1.98m	1.98m	1.98m	1.98m	1.98m	1.98m	1.98m	1.98m	1.98m	1.98m	1.98m	2.03m
	"d" Dist Bars	Top Slab–Tot. No.	12	6	6	12	6	6	12	6	6	6	12	6	6	6
		Bottom Slab–Tot. No.	6	6	6	6	6	6	6	6	6	6	6	6	6	6
	"e" Bars	Size Bar #	13	13	13	13	13	13	13	13	16	16	13	16	19	19
		Spacing	457	457	406	457	356	216	457	254	241	178	457	279	229	152
	Spacers	Number	30			33			36				36			
Quan.	Concrete: cu m per lin. ft.		0.59	0.69	0.83	0..63	0.73	0.86	.67	.77	.91	.99	0.71	.82	.96	1.12
Quan.	Reinf: kgs per lin. ft.		55	54	67	57	56	70	58	59	74	79	59	62	80	91

Note

For boxes of height less than that shown in table, use next greater table height slabs, wall dimensions and reinforcing steel, and make necessary changes in bar lengths, number of spacers and quantities. Number of "d" bars in table is slab total for both cells.

This drawing is NOT in conformance with latest UBC and should be used with care and judgment.

Revision	By	Approved	Date
ORIGINAL		Kercheval	12/75
Add Metric		T. Stanton	03/03

SAN DIEGO REGIONAL STANDARD DRAWING

DOUBLE BOX CULVERT
DETAILS No. 1

RECOMMENDED BY THE SAN DIEGO REGIONAL STANDARDS COMMITTEE

Chairperson R.C.E. 19246 Date 3/10/2003

DRAWING NUMBER D-78E

IMPERIAL TABLE – SPAN 6' (all measuements in feet and/or inches).

For Metric table (1.83m Span) – see drawing D78E

SPAN			6'													
HEIGHT			3'			4'			5'				6'			
STRENGTH CLASSIFICATION			A	B	C	A	B	C	A	B	C	D	A	B	C	D
MAX FILL OVER TOP			3	13	23	3	13	23	3	13	23	30	3	13	23	30
Conc.	Top Slab	T_1	7 1/2	7 1/2	8 1/4	7 1/2	7 1/2	8 1/4	7 1/2	7 1/2	8 1/4	9 1/4	7 1/2	7 1/2	8 1/4	9 1/4
Conc.	Bottom Slab	T_2	6	7 3/4	9 1/4	6	7 3/4	9 1/4	6	8	9 1/4	10	6	8	9 1/4	10 1/4
Conc.	Sidewalls	T_3	6	6	6	6	6	6	6	6	6	6	6	6	6	6
Reinforcing Steel	"a"	Size Bar #	6	5	5	6	5	5	6	5	5	5	6	5	5	5
		Spacing	13	14	11 1/2	13	14	11 1/2	13	14	11 1/2	10	13	14	11 1/2	10
		Length	20-10	20-9	20-9	20-10	20-9	20-9	20-10	20-9	20-9	20-9	20-10	20-9	20-9	20-9
	"b" or "b_1"	Size Bar #	6	6	6	6	6	6	6	6	6	6	6	6	6	6
		Spacing	13	14	11 1/2	13	14	11 1/2	13	14	11 1/2	10	13	14	11 1/2	10
		Length "b"	20-3	20-3	20-5	20-3	20-3	20-5	20-3	20-3	20-5	20-6	20-3	20-3	20-5	20-6
		Length "b_1"	20-0	20-2	20-5	20-0	20-2	20-5	20-0	20-2	20-5	20-6	20-0	20-0	20-5	20-7
	"c"	Size Bar #	4	6	6	4	6	6	4	6	6	6	4	6	6	6
		Spacing	13	14	11 1/2	13	14	11 1/2	13	14	11 1/2	10	13	14	11 1/2	10
		Length	13-0	13-0	13-0	13-0	13-0	13-0	13-0	13-0	13-0	13-0	13-0	13-0	13-0	13-0
	"d" Dist Bars	Top Slab-Tot. No.	18	9	9	18	9	9	18	9	9	9	18	9	9	9
		Bottom Slab-Tot. No.	9	9	9	9	9	9	9	9	9	9	9	9	9	9
	"e" Bars	Size Bar #	4	4	4	4	4	4	4	4	5	5	4	4	6	6
		Spacing	18	18	18	18	18	11 1/2	18	11 1/2	12	10	18	8	12	10
	Spacers	Number	40			40			52				48			
Quan.	Concrete: C.Y. per lin. ft.		1.05	1.15	1.29	1.12	1.23	1.37	1.19	1.32	1.44	1.55	1.27	1.39	1.52	1.64
	Reinf :lbs per lin. ft.		181	168	196	183	170	200	187	177	209	235	192	187	221	249

Note

For boxes of height less than that shown in table, use next greater table height slabs, wall dimensions and reinforcing steel, and make necessary changes in bar lengths, number of spacers and quantities. Number of "d" bars in table is slab total for both cells.

This drawing is NOT in conformance with latest UBC and should be used with care and judgment.

Revision	By	Approved	Date
ORIGINAL		Kercheval	12/75
Add Metric		T. Stanton	03/03

SAN DIEGO REGIONAL STANDARD DRAWING

TRIPLE BOX CULVERT

DETAILS No. 1

RECOMMENDED BY THE SAN DIEGO REGIONAL STANDARDS COMMITTEE

Chairperson R.C.E. 19246 Date 3/01/2003

DRAWING NUMBER D-78F

METRIC TABLE – SPAN 2.44m (all measuements in millimeters unless otherwise noted).
For Imperial table (8' Span) – see drawing D78BH

SPAN			2.44m															
HEIGHT			1.22m			1.52m			1.83m			2.13m				2.44m			
STRENGTH CLASSIFICATION			A	B	C	A	B	C	A	B	C	A	B	C	D	A	B	C	D
MAX FILL OVER TOP			610	3.4m	6.1m	610	3.4m	6.1m	610	3.4m	6.1m	610	3.4m	6.1m	8.5m	610	3.4m	6.1m	8.5m
Conc.	Top Slab	T_1	210	210	260	210	210	260	210	210	260	210	210	260	286	210	210	260	286
Conc.	Bottom Slab	T_2	165	229	279	165	235	279	165	235	279	171	235	11	311	171	235	279	311
Conc.	Sidewalls	T_3	152	152	152	152	152	152	152	152	152	152	152	165	165	178	178	191	216
Reinforcing Steel	"a"	Size Bar #	19	16	16	19	16	16	19	16	16	19	16	16	19	19	16	16	19
Reinforcing Steel	"a"	Spacing	286	305	305	286	305	305	286	305	305	286	305	305	267	286	286	305	267
Reinforcing Steel	"a"	Length	8.18m	8.15m	8.15m	8.18m	8.15m	8.15m	8.18m	8.15m	8.15m	8.18m	8.15m	8.20m	8.33m	8.28m	8.26m	8.31m	8.43m
Reinforcing Steel	"b" or "b_1"	Size Bar #	19	19	22	19	19	22	19	19	22	19	19	22	22	19	19	22	22
Reinforcing Steel	"b" or "b_1"	Spacing	286	305	305	286	305	305	286	305	305	286	305	305	267	286	286	305	267
Reinforcing Steel	"b" or "b_1"	Length "b"	8.05m	8.05m	8.10m	8.05m	8.05m	8.10m	8.05m	8.05m	8.10m	8.05m	8.05m	8.15m	8.31m	8.15m	8.15m	8.26m	8.41m
Reinforcing Steel	"b" or "b_1"	Length "b_1"	12.19m	8.03m	8.10m	12.19m	8.05m	8.10m	12.19m	8.05m	8.10m	7.95m	8.05m	8.15m	8.31m	8.05m	8.15m	8.26m	8.41m
Reinforcing Steel	"c"	Size Bar #	13	19	22	13	19	22	13	19	22	143	19	22	22	143	19	22	22
Reinforcing Steel	"c"	Spacing	286	305	305	286	305	305	286	305	305	286	305	305	267	286	286	305	267
Reinforcing Steel	"c"	Length	5.18m	5.18m	5.18m	5.18m	5.18m	5.18m	5.18m	5.18m	5.18m	5.18m	5.18m	5.21m	5.26m	5.23m	5.23m	5.26m	5.31m
Reinforcing Steel	"d" Dist Bars	Top Slab–Tot. No.	24	12	12	24	12	12	24	12	12	24	12	12	12	24	12	12	12
Reinforcing Steel	"d" Dist Bars	Bottom Slab–Tot. No.	12	12	12	12	12	12	12	12	12	12	12	12	12	12	12	12	12
Reinforcing Steel	"e" Bars	Size Bar #	13	13	13	13	13	16	13	16	19	13	19	22	22	13	19	22	22
Reinforcing Steel	"e" Bars	Spacing	457	457	305	457	305	305	457	305	305	286	305	305	267	286	286	305	267
Reinforcing Steel	Spacers	Number	58			62			62			66				70			88
Quan.	Concrete: cu m per lin. ft.		1.12	1.28	1.52	1.18	1.35	1.57	1.24	1.41	1.64	1.31	1.46	1.73	1.96	1.45	1.61	1.88	2.13
Quan.	Reinf: kg per lin. ft.		118	113	137	121	117	141	121	120	145	125	126	152	186	128	134	157	200

Note

For boxes of height less than that shown in table, use next greater table height slabs, wall dimensions and reinforcing steel, and make necessary changes in bar lengths, number of spacers and quantities. Number of "d" bars in table is slab total for both cells.

This drawing is NOT in conformance with latest UBC and should be used with care and judgment.

Revision	By	Approved	Date
ORIGINAL		Kercheval	12/75
Add Metric		T. Stanton	03/03

SAN DIEGO REGIONAL STANDARD DRAWING

TRIPLE BOX CULVERT
DETAILS No. 1

RECOMMENDED BY THE SAN DIEGO REGIONAL STANDARDS COMMITTEE

Chairperson R.C.E. 19246 Date 3/10/2003

DRAWING NUMBER D-78G

IMPERIAL TABLE – SPAN 8' (all measuements in feet and/or inches).

For Metric table (2.44m Span) – see drawing D78G

SPAN			8'																
HEIGHT			4'			5'			6'			7'				8'			
STRENGTH CLASSIFICATION			A	B	C	A	B	C	A	B	C	A	B	C	D	A	B	C	D
MAX FILL OVER TOP			2	11	20	2	11	20	2	11	20	2	11	20	28	2	11	20	28
Conc.	Top Slab	T_1	8 1/4	8 1/4	10 1/4	8 1/4	8 1/4	10 1/4	8 1/4	8 1/4	10 1/4	8 1/4	8 1/4	10 1/4	11 1/2	8 1/4	8 1/4	10 1/4	11 1/2
Conc.	Bottom Slab	T_2	6 1/2	9	11	6 1/2	9 1/4	11	6 1/2	9 1/4	11	6 3/4	9 1/4	11	12 1/4	6 3/4	9 1/4	11	12 1/4
Conc.	Sidewalls	T_3	6	6	6	6	6	6	6	6	6	6	6	6 1/2	6 1/2	7	7	7 1/2	8 1/2
Reinforcing Steel	"a"	Size Bar #	6	5	5	6	5	5	6	5	5	6	5	5	6	6	5	5	6
Reinforcing Steel	"a"	Spacing	11 1/2	12	12	11 1/2	12	12	11 1/2	12	12	11 1/2	12	12	10 1/2	11 1/2	11 1/2	12	10 1/2
Reinforcing Steel	"a"	Length	26-10	26-9	26-9	26-10	26-9	26-9	26-10	26-9	26-9	26-10	26-9	26-11	27-4	27-2	27-1	27-3	27-8
Reinforcing Steel	"b"	Size Bar #	6	6	7	6	6	7	6	6	7	6	6	7	7	6	6	7	7
Reinforcing Steel	"b"	Spacing	11 1/2	12	12	11 1/2	12	12	11 1/2	12	12	11 1/2	12	12	10 1/2	11 1/2	11 1/2	12	10 1/2
Reinforcing Steel	or "b_1"	Length "b"	26-5	26-5	26-7	26-5	26-5	26-7	26-5	26-5	26-7	26-5	26-5	26-9	27-3	26-9	26-9	27-1	27-7
Reinforcing Steel	or "b_1"	Length "b_1"	26-0	26-4	26-7	26-0	26-5	26-7	26-0	26-5	26-7	26-1	26-5	26-9	27-3	26-5	26-9	27-1	27-7
Reinforcing Steel	"c"	Size Bar #	4	6	7	4	6	7	4	6	7	4	6	7	7	4	6	7	7
Reinforcing Steel	"c"	Spacing	11 1/2	12	12	11 1/2	12	12	11 1/2	12	12	11 1/2	12	12	10 1/2	11 1/2	11 1/2	12	10 1/2
Reinforcing Steel	"c"	Length	17-0	17-0	17-0	17-0	17-0	17-0	17-0	17-0	17-0	17-0	17-0	17-1	17-3	17-2	17-2	17-3	17-5
Reinforcing Steel	"d" Dist Bars	Top Slab–Tot. No.	24	12	12	24	12	12	24	12	12	24	12	12	12	24	12	12	12
Reinforcing Steel	"d" Dist Bars	Bottom Slab–Tot. No.	12	12	12	12	12	12	12	12	12	12	12	12	12	12	12	12	12
Reinforcing Steel	"e" Bars	Size Bar #	4	4	4	4	4	5	4	5	6	4	6	7	7	4	6	7	7
Reinforcing Steel	"e" Bars	Spacing	18	18	12	18	12	12	18	12	12	11 1/2	12	12	10 1/2	11 1/2	11 1/2	12	10 1/2
Reinforcing Steel	Spacers	Number	58			62			62			66				70			88
Quan.	Concrete: C.Y. per lin. ft.		1.47	1.67	1.99	1.54	1.76	2.06	1.62	1.84	2.14	1.71	1.91	2.26	2.57	1.90	2.10	2.46	2.79
Quan.	Reinf :lbs per lin. ft.		261	250	301	266	257	310	267	264	320	276	277	336	409	283	295	347	441

Note

For boxes of height less than that shown in table, use next greater table height slabs, wall dimensions and reinforcing steel, and make necessary changes in bar lengths, number of spacers and quantities. Number of "d" bars in table is slab total for both cells.

This drawing is NOT in conformance with latest UBC and should be used with care and judgment.

Revision	By	Approved	Date
ORIGINAL		Kercheval	12/75
Add Metric		T. Stanton	03/03

SAN DIEGO REGIONAL STANDARD DRAWING

TRIPLE BOX CULVERT

DETAILS No. 1

RECOMMENDED BY THE SAN DIEGO REGIONAL STANDARDS COMMITTEE

Chairperson R.C.E. 19246 Date 3/10/2003

DRAWING NUMBER D-78H

METRIC TABLE – SPAN 3.05m (all measuements in millimeters unless otherwise noted).

For Imperial table (10' Span) – see drawing D78BJ

SPAN			3.05m																
HEIGHT			1.52m			1.83m			2.13m			2.44m				3.05m			
STRENGTH CLASSIFICATION			A	B	C	A	B	C	A	B	C	A	B	C	D	A	B	C	D
MAX FILL OVER TOP			610	3.4m	6.1m	610	3.4m	6.1m	610	3.4m	6.1m	610	3.4m	6.1m	28	610	3.4m	6.1m	28
Conc.	Top Slab	T_1	229	254	305	229	254	305	229	254	305	229	254	305	362	229	260	318	368
Conc.	Bottom Slab	T_2	191	273	330	191	273	13	191	273	330	197	279	330	381	203	279	343	381
Conc.	Sidewalls	T_3	152	152	152	152	152	152	152	152	165	178	178	191	216	203	216	229	254
Reinforcing Steel	"a"	Size Bar #	19	19	19	19	19	19	19	19	19	19	19	19	22	19	19	19	22
		Spacing	267	330	254	254 1/2	330	254	267	330	254	267	330	254	279	267	330	254	279
		Length	10.01m	10.01m	10.01m	10.01m	10.01m	10.01m	10.01m	10.01m	10.01m	10.11m	10.11m	10.16m	10.26m	10.21m	10.26m	10.31m0	10.41m
	"b" or "b_1"	Size Bar #	19	22	22	19	22	22	19	22	22	19	22	22	25	19	22	22	25
		Spacing	267	330	254	254 1/2	330	254	267	330	254	267	330	254	279	267	330	254	279
		Length "b"	9.91m	9.93m	10.01m	9.91m	9.93m	10.01m	9.91m	9.93m	10.06m	10.01m	10.03m	10.16m	10.31m	9.80m	10.19m	10.31m	10.49m
		Length "b_1"	9.80m	9.93m	10.03m	9.80m	9.93m	10.03m	9.80m	9.93m	10.31m	9.91m	10.03m	10.19m	10.31m	10.03m	10.19m	10.31m	10.49m
	"c"	Size Bar #	16	22	22	16	22	22	16	22	22	16	22	22	25	16	22	22	25
		Spacing	267	330	254	267	330	254	267	13	254	267	330	254	279	267	330	254	279
		Length	6.40m	6.40m	6.40m	6.40m	6.40m	6.40m	6.40m	6.40m	6.43m	6.45m	6.45m	6.48m	6.53m	6.50m	6.53m	6.55m	6.60m
	"d" Dist Bars	Top Slab–Tot. No.	27	15	15	27	15	15	27	15	15	27	15	15	15	27	15	15	15
		Bottom Slab–Tot. No.	15	15	15	15	15	15	15	15	15	15	15	15	15	15	15	15	15
	"e" Bars	Size Bar #	13	13	16	13	16	19	13	19	22	13	19	22	25	16	19	25	25
		Spacing	457	330	254	457	330	254	330	330	254	267	305	10	279	267	229	254	229
	Spacers	Number	68			68			72			76			94	102			
Quan.	Concrete: cu m per lin. ft.		1.51	1.83	2.16	1.57	1.90	2.22	1.63	1.95	2.32	1.79	2.12	2.47	2.90	2.05	2.43	2.85	3.23
Quan.	Reinf kg per lin. ft.		162	169	213	163	172	219	166	177	228	171	182	233	268	191	205	262	287

Note

For boxes of height less than that shown in table, use next greater table height slabs, wall dimensions and reinforcing steel, and make necessary changes in bar lengths, number of spacers and quantities. Number of "d" bars in table is slab total for both cells.

This drawing is NOT in conformance with latest UBC and should be used with care and judgment.

Revision	By	Approved	Date
ORIGINAL		Kercheval	12/75
Add Metric		T. Stanton	03/03

SAN DIEGO REGIONAL STANDARD DRAWING

TRIPLE BOX CULVERT

DETAILS No. 1

RECOMMENDED BY THE SAN DIEGO REGIONAL STANDARDS COMMITTEE

Chairperson R.C.E. 19246 Date 3/10/2003

DRAWING NUMBER D-781

IMPERIAL TABLE – SPAN 10' (all measuements in feet and/or inches).

For Metric table (3.05m Span) – see drawing D78I

SPAN			10'																
HEIGHT			5'			6'			7'			8'				10'			
STRENGTH CLASSIFICATION			A	B	C	A	B	C	A	B	C	A	B	C	D	A	B	C	D
MAX FILL OVER TOP			2	11	20	2	11	20	2	11	20	2	11	20	28	2	11	20	28
Conc.	Top Slab	T_1	9	10	12	9	10	12	9	10	12	9	10	12	14 1/4	9	10 1/4	12 1/2	14 1/2
Conc.	Bottom Slab	T_2	7 1/2	10 3/4	13	7 1/2	10 3/4	13	7 1/2	10 3/4	13	7 3/4	11	13	15	8	11	13 1/2	15
Conc.	Sidewalls	T_3	6	6	6	6	6	6	6	6	6 1/2	7	7	7 1/2	8 1/2	8	8 1/2	9	10
Reinforcing Steel	"a"	Size Bar #	6	6	6	6	6	6	6	6	6	6	6	6	7	6	6	6	7
		Spacing	10 1/2	13	10	10 1/2	13	10	10 1/2	13	10	10 1/2	13	10	11	10 1/2	13	10	11
		Length	32-10	32-10	32-10	32-10	32-10	32-10	32-10	32-10	32-10	33-2	33-2	33-4	33-8	33-6	33-8	33-10	34-2
	"b"	Size Bar #	6	7	7	6	7	7	6	7	7	6	7	7	8	6	7	7	8
		Spacing	10 1/2	13	10	10 1/2	13	10	10 1/2	13	10	10 1/2	13	10	11	10 1/2	13	10	11
	or "b_1"	Length "b"	32-6	32-7	32-10	32-6	32-7	32-10	32-6	32-7	33-0	32-10	32-11	33-4	33-11	32-2	33-5	33-11	34-5
		Length "b_1"	32-2	32-7	32-11	32-2	32-7	32-11	32-2	32-7	33-1	32-6	32-11	33-5	33-11	32-11	33-5	33-11	34-5
	"c"	Size Bar #	5	7	7	5	7	7	5	7	7	5	7	7	8	5	7	7	8
		Spacing	10 1/2	13	10	10 1/2	13	10	10 1/2	13	10	10 1/2	13	10	11	10 1/2	13	10	11
		Length	21-0	21-0	21-0	21-0	21-0	21-0	21-0	21-0	21-1	21-2	21-2	21-3	21-5	21-4	21-5	21-6	21-8
	"d" Dist Bars	Top Slab-Tot. No.	27	15	15	27	15	15	27	15	15	27	15	15	15	27	15	15	15
		Bottom Slab-Tot. No.	15	15	15	15	15	15	15	15	15	15	15	15	15	15	15	15	15
	"e" Bars	Size Bar #	4	4	5	4	5	6	4	6	7	4	6	7	8	5	6	8	8
		Spacing	18	13	10	18	13	10	13	13	10	10 1/2	12	10	11	10 1/2	9	10	9
	Spacers	Number	68			68			72			76			94	102			
Quan.	Concrete: C.Y. per lin. ft.		1.98	2.40	2.82	2.06	2.48	2.90	2.13	2.55	3.03	2.34	2.77	3.23	3.78	2.68	3.18	3.73	4.22
Quan.	Reinf :lbs per lin. ft.		358	372	470	359	379	482	367	391	502	377	402	514	590	421	453	577	632

Note

For boxes of height less than that shown in table, use next greater table height slabs, wall dimensions and reinforcing steel, and make necessary changes in bar lengths, number of spacers and quantities. Number of "d" bars in table is slab total for both cells.

This drawing is NOT in conformance with latest UBC and should be used with care and judgment.

Revision	By	Approved	Date
ORIGINAL		Kercheval	12/75
Add Metric		T. Stanton	03/03

SAN DIEGO REGIONAL STANDARD DRAWING

TRIPLE BOX CULVERT

DETAILS No. 1

RECOMMENDED BY THE SAN DIEGO REGIONAL STANDARDS COMMITTEE

3/01/2003

Chairperson R.C.E. 19246 Date

DRAWING NUMBER D-78J

METRIC TABLE – SPAN 3.66m (all measuements in millimeters unless otherwise noted).

For Imperial table (12' Span) – see drawing D78BJ

SPAN			3.66m																					
HEIGHT			1.83m			2.13m			2.44m			2.74m				3.05m				3.66m			
STRENGTH CLASSIFICATION			A	B	C	A	B	C	A	B	C	A	B	C	D	A	B	C	D	A	B	C	D
MAX FILL OVER TOP			610	3m	5.5m	610	3m	5.5m	610	3m	5.5m	2	3.4m	20	9.1m	610	3.4m	20	9.1m	610	3.4m	20	9.1m
Conc.	Top Slab	T_1	260	286	356	260	286	356	260	286	356	260	305	375	451	260	305	375	451	260	305	375	451
Conc.	Bottom Slab	T_2	210	305	368	216	305	375	216	305	375	222	318	394	464	222	318	394	464	229	324	400	464
Conc.	Sidewalls	T_3	152	152	165	152	152	178	178	178	191	203	203	229	254	203	203	229	267	229	229	267	305
Reinforcing Steel	"a"	Size Bar #	22	19	22	22	19	22	22	19	22	22	19	22	25	22	19	22	25	22	19	22	25
		Spacing	305	11	286	305	279	286	305	279	286	305	267	279	286	305	267	279	286	305	267	279	286
		Length	11.91m	11.84m	11.96m	11.91m	11.84m	12.01m	12.01m	11.94m	12.07m	12.12m	12.04m	12.22m	12.45m	12.12m	12.04m	12.22m	12.50m	12.22m	11.91m	12.37m	12.65m
	"b" or "b_1"	Size Bar #	22	22	25	22	22	25	22	22	25	22	22	25	29	22	22	25	29	22	22	25	29
		Spacing	305	279	286	305	279	286	305	279	286	305	267	279	286	305	267	279	286	305	267	279	286
		Length "b"	11.76m	11.81m	11.96m	11.76m	11.81m	12.01m	11.86m	11.91m	12.07m	11.96m	12.04m	12.24m	12.45m	11.96m	12.04m	12.24m	12.50m	12.07m	11.91m	12.40m	12.65m
		Length "b_1"	11.66m	11.76m	11.94m	11.66m	11.81m	12.01m	11.76m	11.91m	12.07m	11.89m	12.04m	12.24m	12.45m	11.89m	12.04m	12.24m	12.50m	11.99m	11.91m	12.42m	12.65m
	"c"	Size Bar #	19	22	25	19	22	25	19	22	25	19	22	25	29	19	22	25	29	19	22	25	29
		Spacing	305	279	286	305	279	286	305	279	286	305	267	279	286	305	267	279	286	305	267	279	286
		Length	7.62m	7.62m	7.65m	7.62m	7.62m	7.67m	7.67m	7.67m	7.70m	7.72m	7.72m	7.77m	7.82m	7.72m	7.72m	7.77m	7.85m	7.77m	7.77m	7.85m	7.92m
	"d" Dist Bars	Top Slab–Tot. No.	36	15	15	36	15	15	36	15	15	36	15	15	15	36	15	15	15	36	15	15	15
		Bottom Slab–Tot. No.	15	15	15	15	15	15	15	15	15	15	15	15	15	15	15	15	15	15	15	15	15
	"e" Bars	Size Bar #	13	13	19	13	13	19	13	13	19	13	19	22	25	16	22	25	25	19	22	29	29
		Spacing	457	178	286	305	146	286	305	140	229	254	267	279	286	305	267	279	165	305	229	279	229
	Spacers	Number	76			80			84			104				110				116			
Quan.	Concrete: cu m per lin. ft.		1.99	2.43	2.92	2.06	2.49	3.04	2.20	2.64	3.16	2.39	2.90	3.52	4.17	2.47	2.97	3.61	4.32	2.77	3.27	4.01	4.72
Quan.	Reinf kg per lin. ft.		222	229	285	225	234	289	229	239	297	243	264	326	396	249	275	338	426	261	288	360	440

Note

For boxes of height less than that shown in table, use next greater table height slabs, wall dimensions and reinforcing steel, and make necessary changes in bar lengths, number of spacers and quantities. Number of "d" bars in table is slab total for both cells.

This drawing is NOT in conformance with latest UBC and should be used with care and judgment.

Revision	By	Approved	Date
ORIGINAL		Kercheval	12/75
Add Metric		T. Stanton	03/03

SAN DIEGO REGIONAL STANDARD DRAWING

TRIPLE BOX CULVERT

DETAILS No. 1

RECOMMENDED BY THE SAN DIEGO REGIONAL STANDARDS COMMITTEE

Chairperson R.C.E. 19246 Date 3/01/2003

DRAWING NUMBER D-78K

IMPERIAL TABLE – SPAN 12' (all measuements in feet and/or inches).

For Metric table (3.66m Span) – see drawing D78I

SPAN			12'																			
HEIGHT			6'			7'			8'			9'				10'				12'			
STRENGTH CLASSIFICATION			A	B	C	A	B	C	A	B	C	A	B	C	D	A	B	C	D	A	B	C	D
MAX FILL OVER TOP			2	10	18	2	10	18	2	10	18	2	11	20	30	2	11	20	30	2	11	20	30
Conc.	Top Slab	T_1	10 1/4	11 1/2	14	10 1/4	11 1/2	14	10 1/4	11 1/2	14	10 1/4	12	14 3/4	17 3/4	10 1/4	12	14 3/4	17 3/4	10 1/4	12	14 3/4	17 3/4
Conc.	Bottom Slab	T_2	8 1/4	12	14 1/2	8 1/2	12	14 3/4	8 1/2	12	14 3/4	8 3/4	12 1/2	15 1/2	18 1/4	8 3/4	12 1/2	15 1/2	18 1/4	9	12 3/4	15 3/4	18 1/4
Conc.	Sidewalls	T_3	6	6	6 1/2	6	6	7	7	7	7 1/2	8	8	9	10	8	8	9	10 1/2	9	9	10 1/2	12
Reinforcing Steel	"a"	Size Bar #	7	6	7	7	6	7	7	6	7	7	6	7	8	7	6	7	8	7	6	7	8
		Spacing	12	11	11 1/2	12	11	11 1/2	12	11	11 1/2	12	10 1/2	11	11 1/2	12	10 1/2	11	11 1/2	12	10 1/2	11	11 1/2
		Length	39–1	38–10	39–3	39–1	38–10	39–5	39–5	39–2	39–7	39–9	39–6	40–1	40–10	39–9	39–6	40–1	41–0	40–1	39–10	40–7	41–6
	"b" or "b_1"	Size Bar #	7	7	8	7	7	8	7	7	8	7	7	8	9	7	7	8	9	7	7	8	9
		Spacing	12	11	11 1/2	12	11	11 1/2	12	11	11 1/2	12	10 1/2	11	11 1/2	12	10 1/2	11	11 1/2	12	10 1/2	11	11 1/2
		Length "b"	38–7	38–9	39–3	38–7	38–9	39–5	38–11	39–1	39–7	39–3	39–6	40–2	40–10	39–3	39–6	40–2	41–0	39–7	39–10	40–8	41–6
		Length "b_1"	38–3	38–7	39–2	38–3	38–9	39–5	38–7	39–1	39–7	39–0	39–6	40–2	40–10	39–0	39–6	40–2	41–0	39–4	39–10	40–9	41–6
	"c"	Size Bar #	6	7	8	6	7	8	6	7	8	6	7	8	9	6	7	8	9	6	7	8	9
		Spacing	12	11	11 1/2	12	11	11 1/2	12	11	11 1/2	12	10 1/2	11	11 1/2	12	10 1/2	11	11 1/2	12	10 1/2	11	11 1/2
		Length	25–0	25–0	25–1	25–0	25–0	25–2	25–2	25–2	25–3	25–4	25–4	25–6	25–8	25–4	25–4	25–6	25–9	25–6	25–6	25–9	26–0
	"d" Dist Bars	Top Slab–Tot. No.	36	15	15	36	15	15	36	15	15	36	15	15	15	36	15	15	15	36	15	15	15
		Bottom Slab–Tot. No.	15	15	15	15	15	15	15	15	15	15	15	15	15	15	15	15	15	15	15	15	15
	"e" Bars	Size Bar #	4	4	6	4	4	6	4	4	6	4	6	7	8	5	7	8	8	6	7	9	9
		Spacing	18	7	11 1/2	12	5 3/4	11 1/2	12	5 1/2	9	10	10 1/2	11	11 1/2	12	10 1/2	11	6 1/2	12	9	11	9
	Spacers	Number	76			80			84			104				110				116			
Quan.	Concrete: C.Y. per lin. ft.		2.60	3.18	3.82	2.70	3.26	3.98	2.88	3.45	4.13	3.13	3.79	4.61	5.45	3.23	3.89	4.72	5.65	3.62	4.28	5.24	6.18
Quan.	Reinf :lbs per lin. ft.		489	505	628	497	516	637	505	527	654	536	582	719	872	548	606	745	939	575	636	793	963

Note

For boxes of height less than that shown in table, use next greater table height slabs, wall dimensions and reinforcing steel, and make necessary changes in bar lengths, number of spacers and quantities. Number of "d" bars in table is slab total for both cells.

This drawing is NOT in conformance with latest UBC and should be used with care and judgment.

Revision	By	Approved	Date
ORIGINAL		Kercheval	12/75
Add Metric		T. Stanton	03/03

SAN DIEGO REGIONAL STANDARD DRAWING

TRIPLE BOX CULVERT
DETAILS No. 1

RECOMMENDED BY THE SAN DIEGO REGIONAL STANDARDS COMMITTEE

Chairperson R.C.E. 19246 Date 3/10/2003

DRAWING NUMBER D-78L

This drawing is NOT in conformance with latest UBC and should be used with care and judgment.

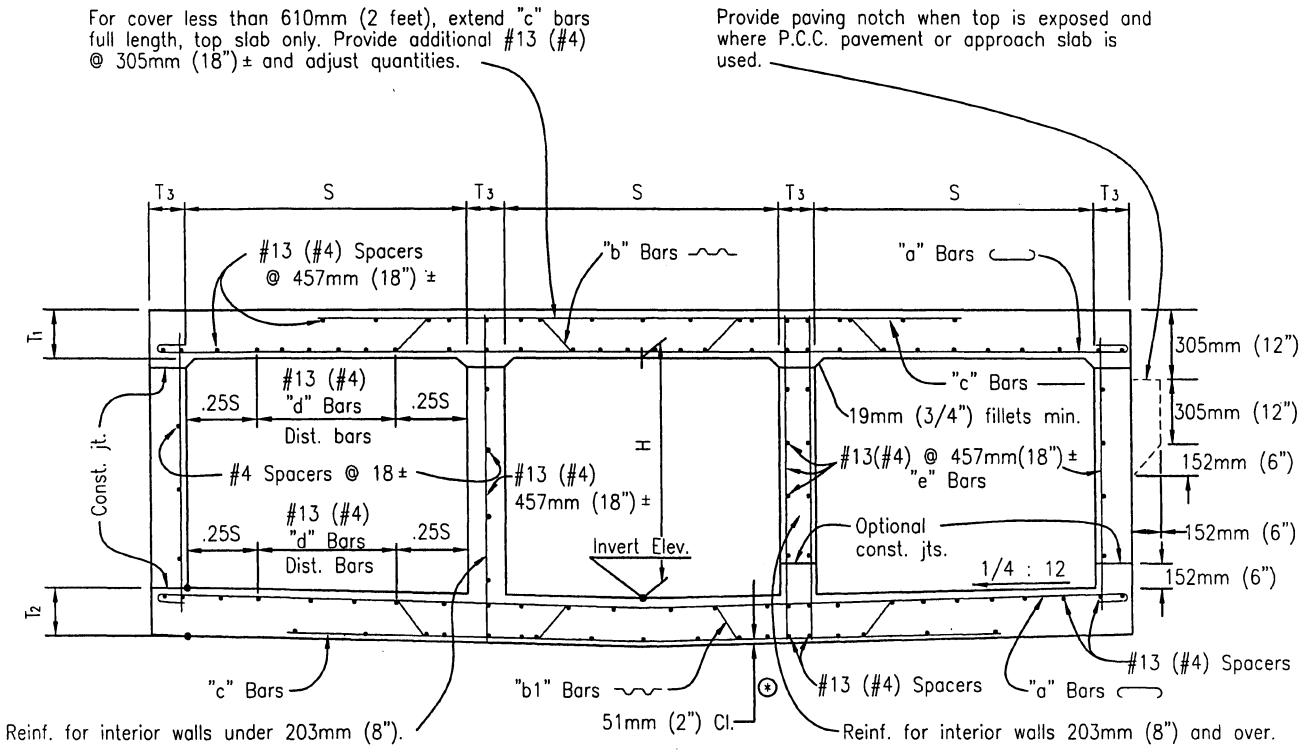

TYPICAL SECTION

⊛ For reinforcement clearance, except at bottom, see "Miscellaneous Details."

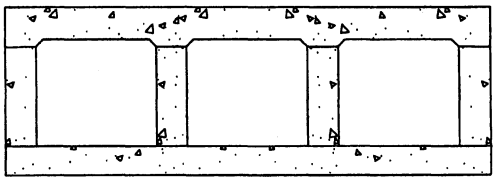

"FLAT INVERT" ALTERNATIVE

(When shown)

Revision	By	Approved	Date
ORIGINAL		Kercheval	12/75
Add Metric		T. Stanton	03/03

SAN DIEGO REGIONAL STANDARD DRAWING

TRIPLE BOX CULVERT
DETAILS NO.2

RECOMMENDED BY THE SAN DIEGO REGIONAL STANDARDS COMMITTEE

T. Stanton 3/10/2003

Chairperson R.C.E. 19246 Date

DRAWING NUMBER D-78M

This drawing is NOT in conformance with latest UBC and should be used with care and judgment.

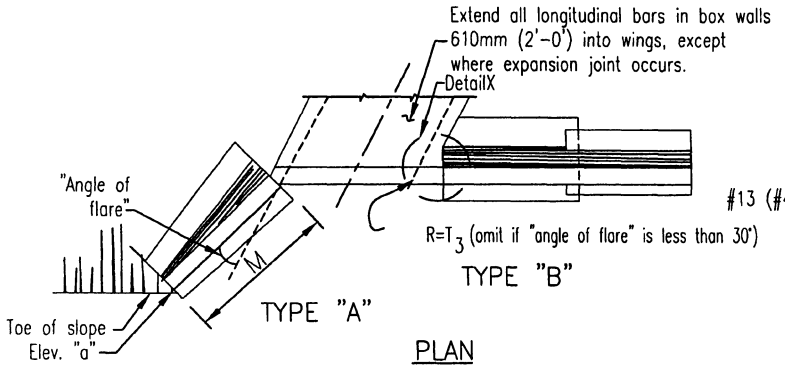

PLAN

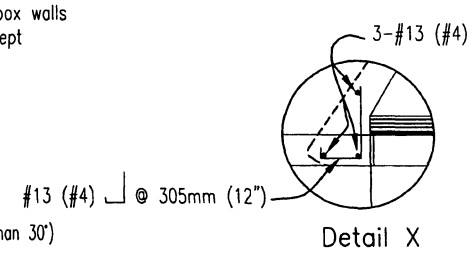

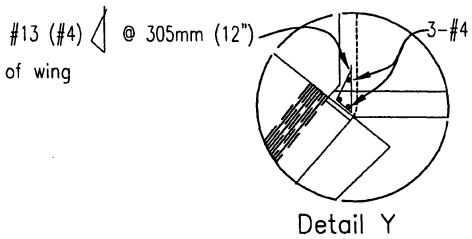

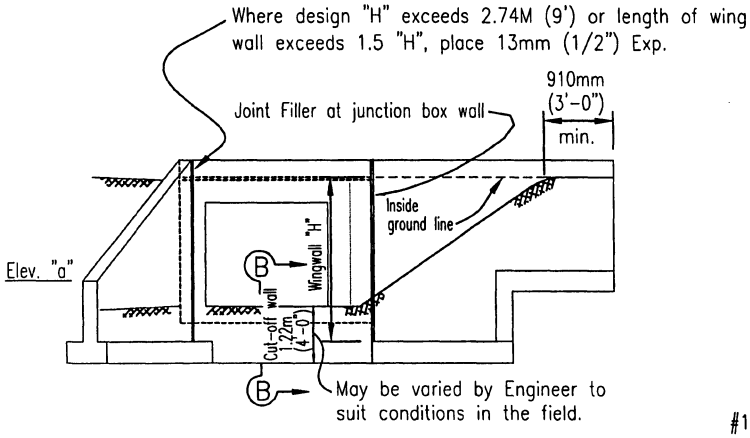

END ELEVATION

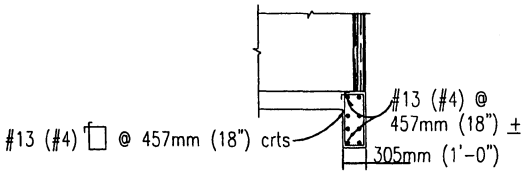

SEC B-B

NOTE
Where 1 1/2:1 surcharge exeeds 1.52m (5'), use Type 2 Retaining Wall.

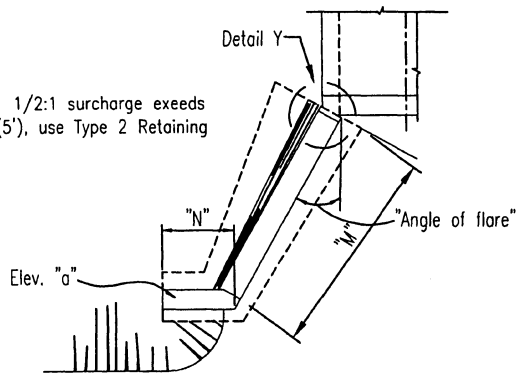

TYPE "C"

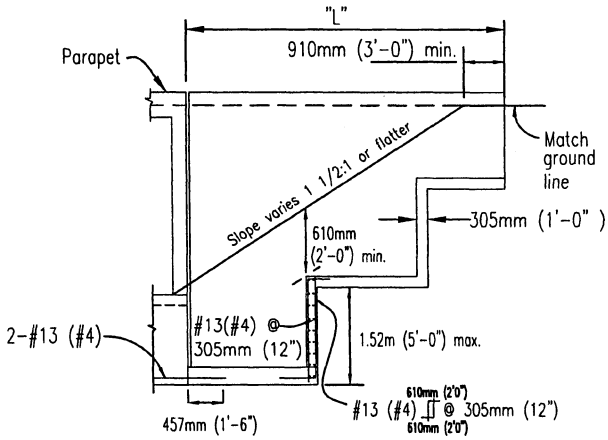

ELEVATION

Revision	By	Approved	Date
ORIGINAL		Kercheval	12/75
Add Metric		T. Stanton	03/03

SAN DIEGO REGIONAL STANDARD DRAWING

BOX CULVERT WINGWALL
TYPES A, B & C
DETAILS NO. 1

RECOMMENDED BY THE SAN DIEGO REGIONAL STANDARDS COMMITTEE

3/10/2003

Chairperson R.C.E. 19246 Date

DRAWING NUMBER D-79A

This drawing is NOT in conformance with latest UBC and should be used with care and judgment.

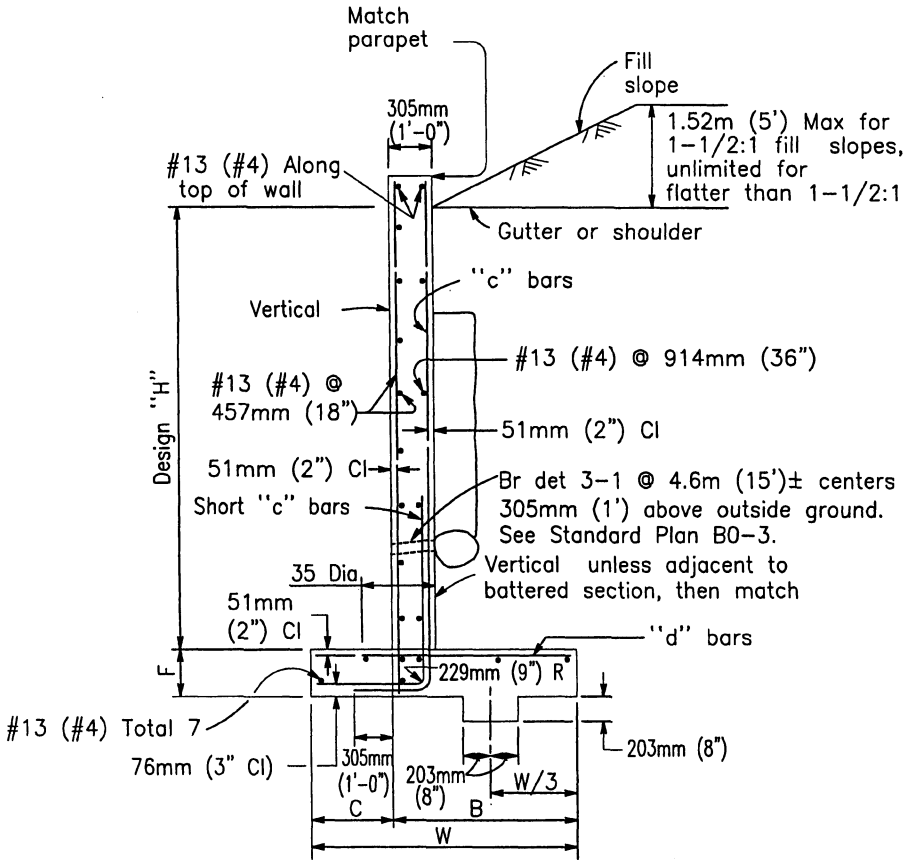

TYPICAL SECTION

H=1.22m (4') Thru 3.66m (12')

Revision	By	Approved	Date
ORIGINAL		Kercheval	12/75
Add Metric		T. Stanton	03/03

SAN DIEGO REGIONAL STANDARD DRAWING

BOX CULVERT WINGWALL
TYPES A, B & C
DETAILS NO. 2

RECOMMENDED BY THE SAN DIEGO REGIONAL STANDARDS COMMITTEE

T. Stanton 3/10/2003

Chairperson R.C.E. 19246 Date

DRAWING NUMBER D-79B

This drawing is NOT in conformance with latest UBC and should be used with care and judgment.

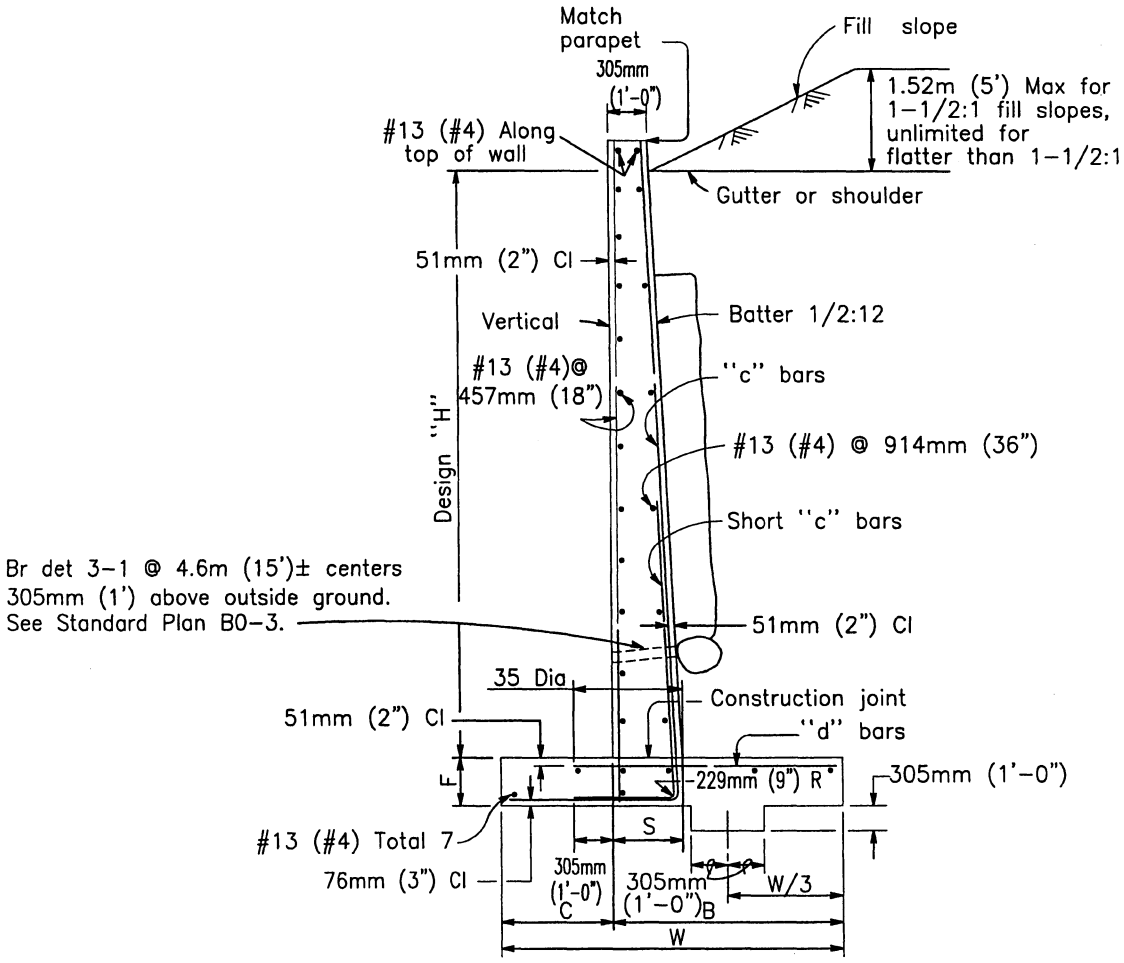

TYPICAL SECTION

H=4.0m (13') Thru 4.9m (16')

Revision	By	Approved	Date
ORIGINAL		Kercheval	12/75
Add Metric		T. Stanton	03/03

SAN DIEGO REGIONAL STANDARD DRAWING

BOX CULVERT WINGWALL
TYPES A, B & C
DETAILS NO. 2

RECOMMENDED BY THE SAN DIEGO REGIONAL STANDARDS COMMITTEE

T. Stanton 3/01/2003

Chairperson R.C.E. 19246 Date

DRAWING NUMBER D-79C

This drawing is NOT in conformance with latest UBC and should be used with care and judgment.

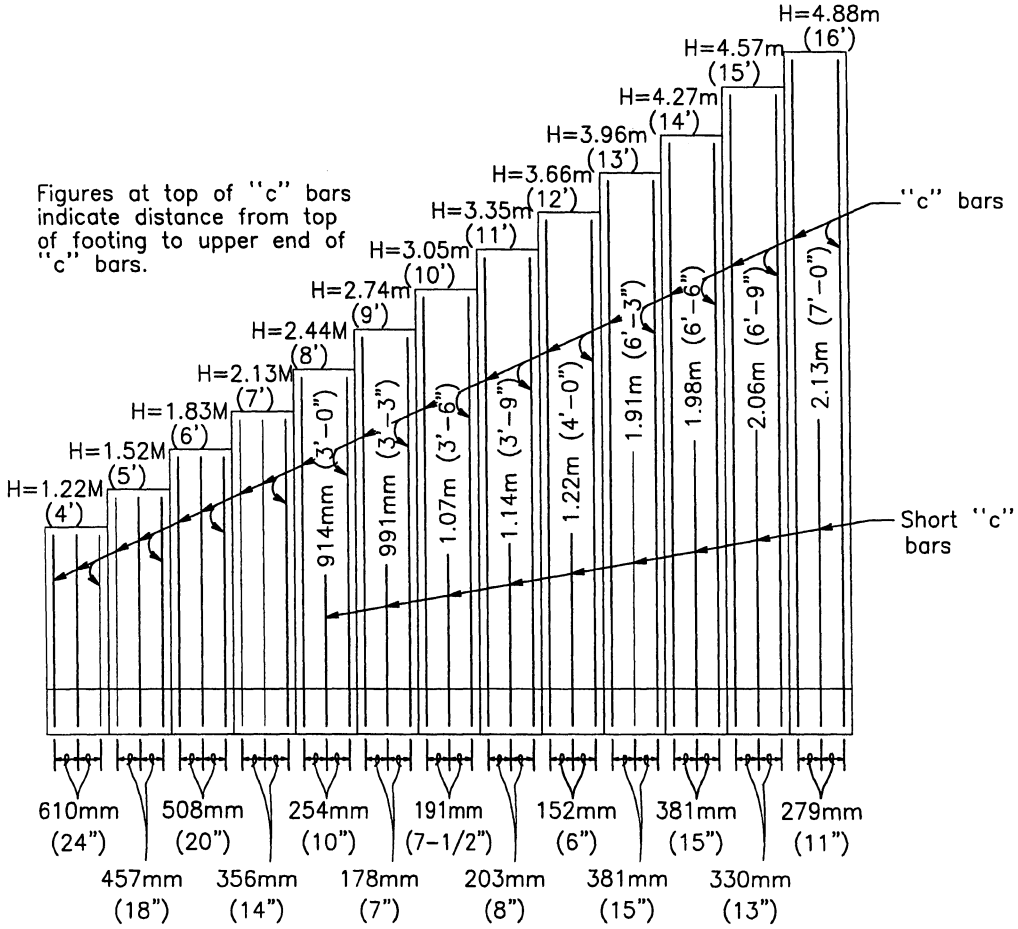

TYPICAL LAYOUT EXAMPLE 1

Revision	By	Approved	Date
ORIGINAL		Kercheval	12/75
Add Metric		T. Stanton	03/03

SAN DIEGO REGIONAL STANDARD DRAWING

BOX CULVERT WINGWALL
TYPES A, B & C
DETAILS NO. 2

RECOMMENDED BY THE SAN DIEGO REGIONAL STANDARDS COMMITTEE

T. Stanton 3/10/2003

Chairperson R.C.E. 19246 Date

DRAWING NUMBER D-79D

This drawing is NOT in conformance with latest UBC and should be used with care and judgment.

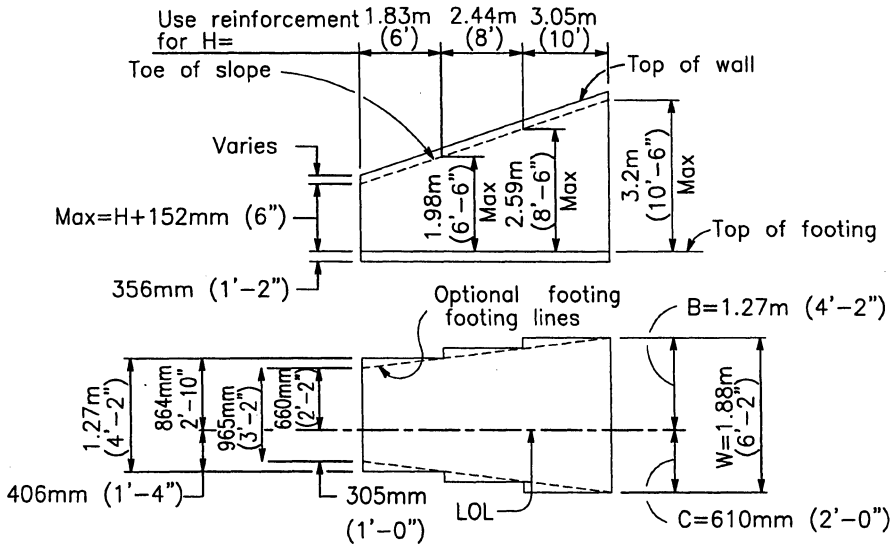

TYPICAL LAYOUT EXAMPLE 2

NOTES

Unit Stresses: f_s=138 Mpa (20,000 psi), f_c=8.3Mpa (1,200 psi), n=10

Maximum Toe Pressure = 144Kpa (1-1/2 Tons/sq. ft).

Elevations, length and angle of flare of wings may be varied by the Engineer to suit conditions encountered in the field.

Walls designed for 610mm (2') liveload surcharge, 1-1/2:1 sloping surcharge not to exceed 1.52m (5') in elevation plus 610mm (2') liveload surcharge, or unlimited 2:1 surcharge. Dimensions "H","L","M","N", Elevation "a" and "Angle of flare" (as apply) are shown on the plans.

Wall height may be exceeded by 152mm (6") before going to next greater "H". Eliminate cutoff wall if adjacent channel is paved and skew is 20° maximum.

Revision	By	Approved	Date
ORIGINAL		Kercheval	12/75
Add Metric		T. Stanton	03/03

SAN DIEGO REGIONAL STANDARD DRAWING

BOX CULVERT WINGWALL
TYPES A, B & C
DETAILS NO. 2

RECOMMENDED BY THE SAN DIEGO REGIONAL STANDARDS COMMITTEE

T. Stanton 3/10/2003

Chairperson R.C.E. 19246 Date

DRAWING NUMBER D-79E

This drawing is NOT in conformance with latest UBC and should be used with care and judgment.

REINFORCED CONCRETE WINGWALLS – METRIC

"H"	1.22m	1.52m	1.83m	2.13m	2.44m	2.74m	3.05m	3.35m	3.66m	3.96m	4.27m	4.57m	4.88m
W	965mm	1.12m	1.27m	1.42m	1.57m	1.73m	1.88m	2.03m	2.18m	2.34m	2.49m	2.64m	2.79m
C	305mm	356mm	406mm	457mm	508mm	559mm	610mm	660mm	711mm	762mm	813mm	864mm	914mm
B	660mm	762mm	864mm	965mm	1.07m	1.17m	1.27m	1.37m	1.47m	1.57m	1.68m	1.78m	1.88m
F	1'-2"												
Batter	None									1/2 : 12			
S	305mm	305mm	305mm	305mm	305mm	305mm	305mm	305mm	305mm	1'-6 ½"	1'-7"	1'-7 ½"	1'-8"
"c" Bars (mm)	#13@6254	#13@457	#16@508	#16@356	#16@254	#16@178	#19@191	#22@203	#22@152	#29@381	#32@381	#32@330	#32@279
"d" Bars (mm)	#13@6254	#13@457	#16@508	#16@356	#16@254	#19@356	#22@381	#25@16	#22@305	#25@381	#29@381	#32@330	#29@279
Conc cu m/lf	0.25	0.30	0.34	0.38	0.43	0.47	0.52	0.56	0.61	0.78	0.85	0.91	0.97
Reinf #/lf	13	16	19	25	30	37	49	62	76	73	90	104	125

Quantities do not include that portion above the design "H" limit.

REINFORCED CONCRETE WINGWALLS – IMPERIAL

"H"	4'	5'	6'	7'	8'	9'	10'	11'	12'	13'	14'	15'	16'
W	3'-2"	3'-8"	4'-2"	4'-8"	5'-2"	5'-8"	6'-2"	6'-8"	7'-2"	7'-8"	8'-2"	8'-8"	9'-2"
C	1'-0"	1'-2"	1'-4"	1'-6"	1'-8"	1'-10"	2'-0"	2'-2"	2'-4"	2'-6"	2'-8"	2'-10"	3'-0"
B	2'-2"	2'-6"	2'-10"	3'-2"	3'-6"	3'-10"	4'-2"	4'-6"	4'-10"	5'-2"	5'-6"	5'-10"	6'-2"
F	1'-2"												
Batter	None									1/2 : 12			
S	1'-0"	1'-0"	1'-0"	1'-0"	1'-0"	1'-0"	1'-0"	1'-0"	1'-0"	1'-6 ½"	1'-7"	1'-7 ½"	1'-8"
"c" Bars	#4@24	#4@18	#5@20	#5@14	#5@10	#5@7	#6@7½	#7@8	#7@6	#9@15	#10@15	#10@13	#10@11
"d" Bars	#4@24	#4@18	#5@20	#5@14	#5@10	#6@14	#7@15	#8@16	#7@12	#8@15	#9@15	#10@13	#9@11
Conc cy/lf	0.32	0.38	0.44	0.49	0.55	0.61	0.67	0.73	0.79	1.02	1.10	1.18	1.26
Reinf #/lf	13	16	19	25	30	37	49	62	76	73	90	104	125

Quantities do not include that portion above the design "H" limit.

Revision	By	Approved	Date
ORIGINAL		Kercheval	12/75
Add Metric		T. Stanton	03/03

SAN DIEGO REGIONAL STANDARD DRAWING

BOX CULVERT WINGWALL
TYPES A, B & C
DETAILS NO. 2

RECOMMENDED BY THE SAN DIEGO REGIONAL STANDARDS COMMITTEE

Chairperson R.C.E. 19246 Date 3/10/2003

DRAWING NUMBER D-79F

This drawing is NOT in conformance with latest UBC and should be used with care and judgment.

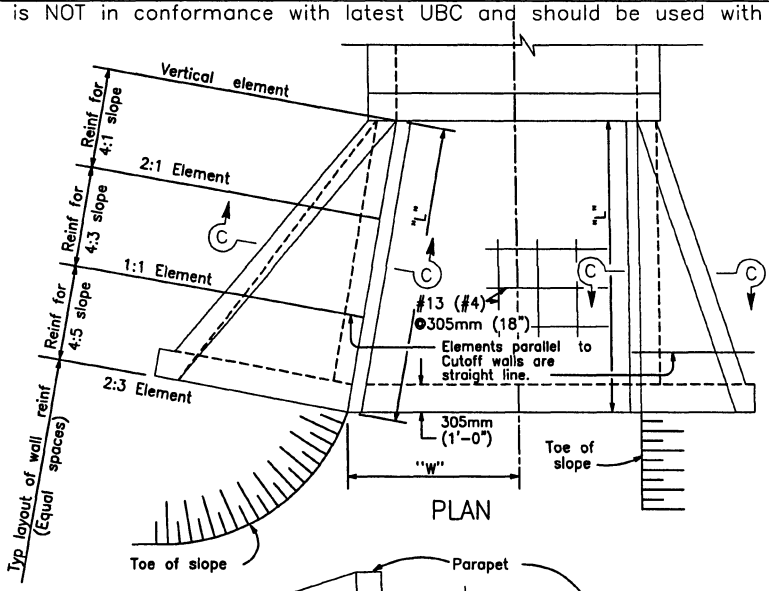

PLAN

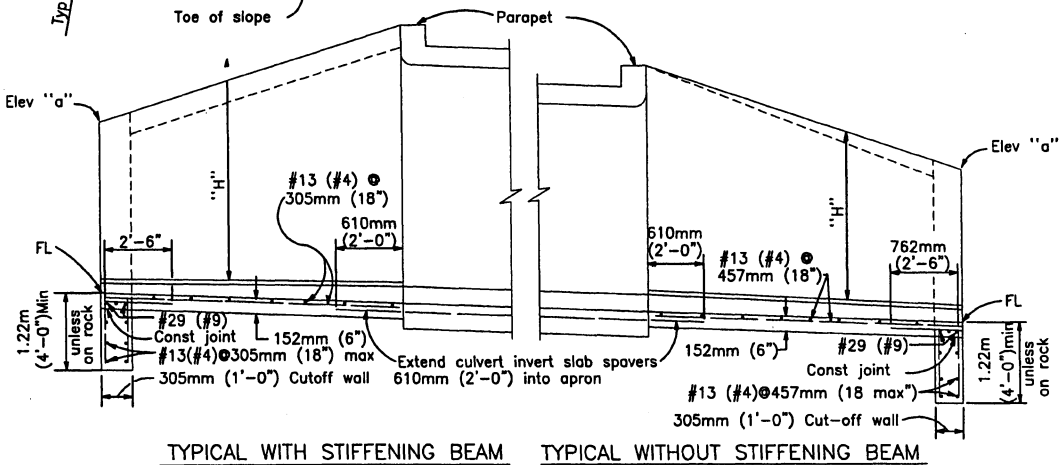

TYPICAL WITH STIFFENING BEAM TYPICAL WITHOUT STIFFENING BEAM

PART LONGITUDAL SECTION

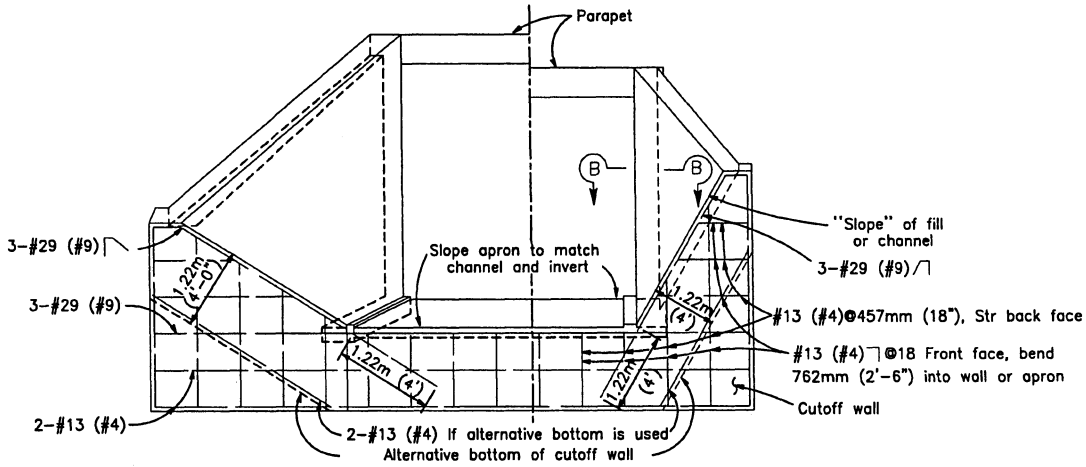

END ELEVATION

Revision	By	Approved	Date
ORIGINAL		Kercheval	12/75
Add Metric		T. Stanton	03/03

SAN DIEGO REGIONAL STANDARD DRAWING

BOX CULVERT WARPED WINGWALL DETAILS NO. 1

RECOMMENDED BY THE SAN DIEGO REGIONAL STANDARDS COMMITTEE

T. Stanton 3/10/2003

Chairperson R.C.E. 19246 Date

DRAWING NUMBER D-80A

This drawing is NOT in conformance with latest UBC and should be used with care and judgment.

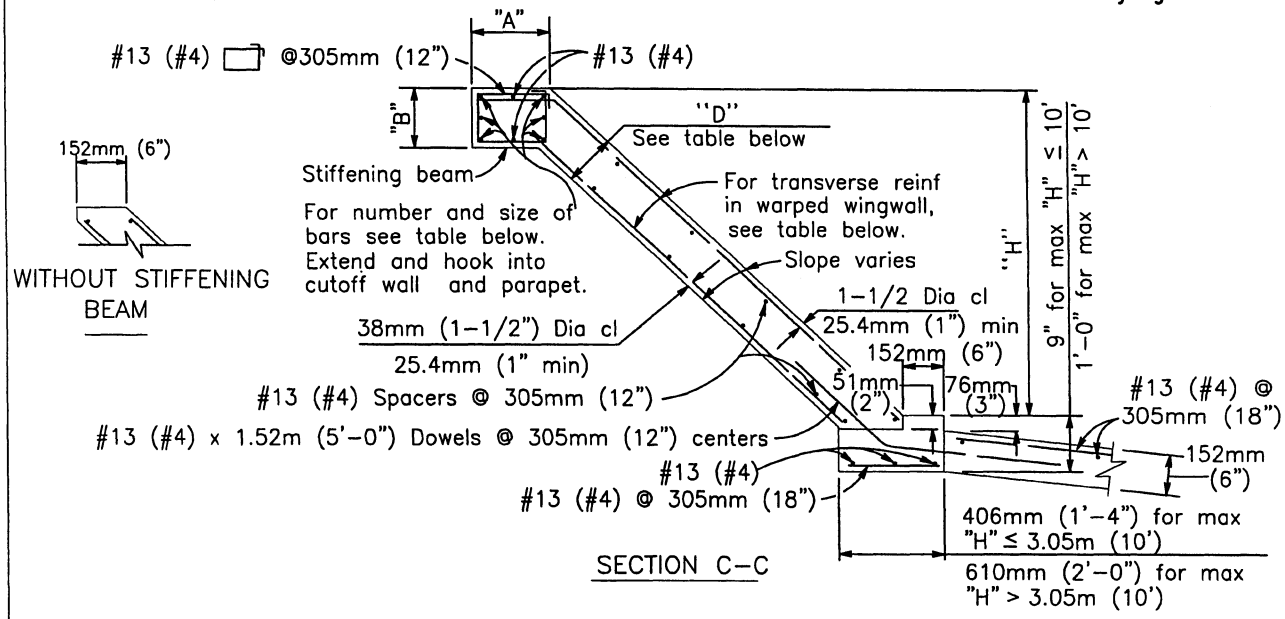

SECTION C-C

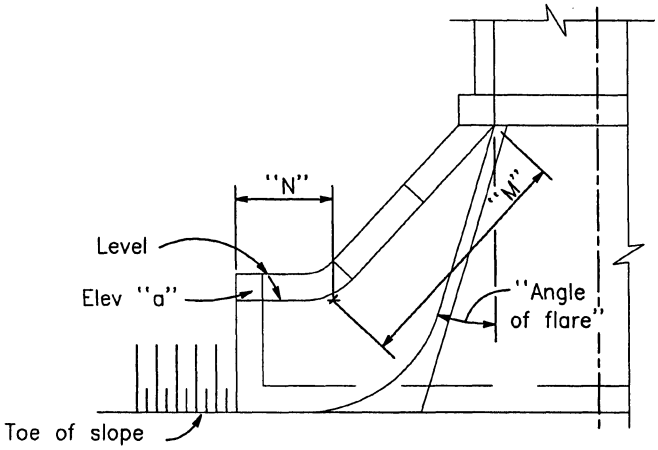

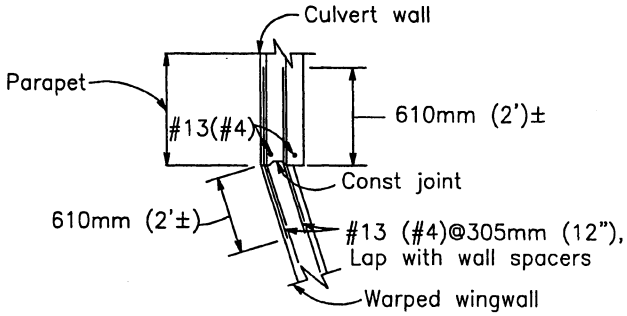

SECTION B-B

ALTERNATIVE WARPED WINGWALL

Use where additional protection to toe of embankment is required.

NOTES

Walls designed for 610mm (2') surcharge; earth density = 3.40 cu m (120 #/cu. ft.); equivalent fluid pressure = 1.0 cu m (36 #/cu. ft.)

Vary "D" of warped wall uniformly from that at cutoff wall to that at culvert, for maximum "H" > 3.66m (12').

Where abrasion is anticipated increase apron thickness to 178mm (7") minimum to provide 51mm (2") minimum reinforcement coverage.

Dimensions "L", "W", "H", "M", "N", Elevation "a"," Angle of flare", and end "Slope" (as apply) are shown on the plans.

Concrete shall be 332 kg/M^3-C-22Mpa (560-C-3250).

Revision	By	Approved	Date
ORIGINAL		A.Kercheval	12/75
Add Metric		T. Stanton	03/03

SAN DIEGO REGIONAL STANDARD DRAWING

BOX CULVERT WARPED WINGWALL DETAILS No. 2

RECOMMENDED BY THE SAN DIEGO REGIONAL STANDARDS COMMITTEE

T.H. Stanton 3/10/2003

Thp. Stanton Chairperson R.C.E. 19246 Date

DRAWING NUMBER D-80B

Revision	By	Approved	Date
ORIGINAL		A.Kercheval	12/75
Add Metric		T. Stanton	03/03

WARPED WINGWALLS – METRIC MEASUREMENT TABLE ONLY

WALL DIMENSIONS AND REINFORCING

Element Slope	"H"	2.44or less bar mm	3.05 bar mm	12' bar mm	14' bar mm	16' bar mm	18' bar mm	20' bar mm
1/4:1	Front face reinf	#13@305	#13@178	#16@178	#16@127	#19@152	#22@178	#22@152
	Rear face reinf	#13@305	#13@305	#13@305	#13@305	#13@305	#13@305	#13@305
3/4:1	Front face reinf	#13@305	#13@305	#13@305	#13@305	#13@254	#13@203	#13@152
	Rear face reinf	#13@305	#13@305	#13@305	#13@254	#13@178	#13@152	#16@203
1–1/4:1	Front face reinf	#13@305	#13@305	#13@305	#13@305	#13@305	#13@305	#13@305
	Rear face reinf	#13@203	#13@203	#13@127	#16@152	#19@178	#19@152	#22@152
"D" at Cutoff Wall		152	152	152	191	203	241	279
"D" at Culvert		152	152	152	203	241	279	330

STIFFENING BEAM DIMENSIONS AND REINFORCING

"H" max \ "L"	3.66m	4.27m	4.88m	5.49m	6.10m	7.62m	9.14m	10.7m	12.2m or more
1.83m	No beam. Place 2–#6 in each face along top of wall.								
2.44m		"A"= 305mm							
3.05m		"B"= 229mm				"A"= 457mm			
3.66m									
4.27m		Total 6–#19		"B"= 305mm				"A"=559mm	
4.88m							"B"=305mm		"A"=610mm
5.49m			Total 6–#22			Total 6–#8		"B"=457MM	
6.10m							Total 8–#29		

WARPED WINGWALLS – U.S. MEASUREMENT TABLE ONLY

WALL DIMENSIONS AND REINFORCING

Element Slope	"H"	8'or less	10'	12'	14'	16'	18'	20'
1/4:1	Front face reinf	#4@12	#4@ 7	#5@ 7	#5@ 5	#6@ 6	#7@ 7	#7@ 6
	Rear face reinf	#4@12	#4@12	#4@12	#4@12	#4@12	#4@12	#4@12
3/4:1	Front face reinf	#4@12	#4@12	#4@12	#4@12	#4@10	#4@ 8	#4@ 6
	Rear face reinf	#4@12	#4@12	#4@12	#4@10	#4@ 7	#4@ 6	#5@ 8
1–1/4:1	Front face reinf	#4@12	#4@12	#4@12	#4@12	#4@12	#4@12	#4@12
	Rear face reinf	#4@ 8	#4@ 8	#4@ 5	#5@ 6	#6@ 7	#6@ 6	#7@ 6
"D" at Cutoff Wall		6"	6"	6"	7–1/2"	8"	9–1/2"	11"
"D" at Culvert		6"	6"	6"	8"	9–1/2"	11"	1'–1"

STIFFENING BEAM DIMENSIONS AND REINFORCING

"H" max \ "L"	12'	14'	16'	18'	20'	25'	30'	35'	40' or more
6'	No beam. Place 2–#6 in each face along top of wall.								
8'		"A"= 1'–0"							
10'		"B"= 9"				"A"= 1'–6"			
12'									
14'		Total 6–#6		"B"= 1'–0"				"A"= 1'–10"	
16'							"B"=1'–0"		"A"=2'–0"
18'			Total 6–#7			Total 6–#8		"B"= 1'–6"	
20'							Total 8–#9		

This drawing is NOT in conformance with latest UBC and should be used with care and judgment.

SAN DIEGO REGIONAL STANDARD DRAWING

BOX CULVERT WARPED WINGWALL

DETAILS No. 2

RECOMMENDED BY THE SAN DIEGO REGIONAL STANDARDS COMMITTEE

T. Stanton 3/01/2003

T. Stanton Chairperson R.C.E. 19246 Date

DRAWING NUMBER D-80C

This drawing is NOT in conformance with latest UBC and should be used with care and judgment.

GENERAL NOTES

QUANTITIES: Quantities are for the sloped invert slab and do not include splices in the longitudinal bars, nor temperature reinforcement for exposed top culvert, nor concrete or reinforcement for parapets or cutoff walls

SPECIAL COVERAGE: Box standard plans are not to be used for culverts in a corrosive environment or where there is a severe abrasive flow condition

DESIGNATION: Show on plans as span x height-strength classification x length, thus 1.22m x 1.22m-A x 18.3m (4 x 4-A x 60'), followed by alternatives.

ALTERNATIVES: Invert will be sloped unless "Trapezoidal Invert", "Flat Invert" or "V Invert" is included in designation. Ends of culvert will be rounded unless "Square Ends" are designated. Parapets will be as shown unless "__ ft. parapet" is designated in plans. Such designations may be different for inlet and outlet ends.

REINF. PLACEMENT: Main Reinforcement is positioned transverse or, for curved culverts, radial when radial, reinforcing spacing is measured along ℄.

CONSTRUCTION NOTES

CONCRETE: Bottom slab & walls shall be class 332 kg/M^3 -B-22Mpa (560-B-3250). Top slab shall be class 332 kg/M^3 -C-22Mpa (560-C-3250).

EXPANSION JOINTS: Bottom Slab-No expansion joints shall be placed.
Top Slab and Walls-When cover is less than span length, place 13mm (1/2") expansion joint filler at 15.2m (50')± centers outside the paved roadway lanes and place bridge detail 3-2 at 9.14m (30')± centers under paved roadway lanes.
When cover is more than span

CONSTRUCTION LOADS: Not permitted until concrete has reached a strength of 20.7Mpa (3,000p.s.i.) or age of 28 days, whichever occurs first, and falsework plans have been submitted by the Contractor, to the Engineer, and approved.

CONSTRUCTION JOINTS: Temporary joints may be permitted if normal (or radial) to C of R.C.B. otherwise, the Contractor is to submit a proposal for consideration.

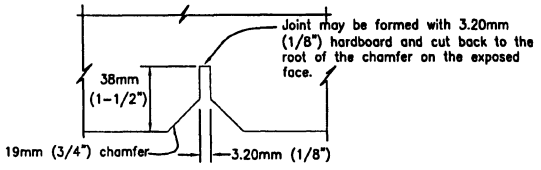

BRIDGE DETAIL 3-2
(Portion)
See Standard Drawing C-15

DESIGN NOTES

SPECIFICATIONS
DESIGN: AASHO, dated 1973, with revisions as supplemented by State of California Bridge Planning and Design Manual.

Sections designed for culvert in a trench on hard foundation, or culvert untrenched on yielding foundation, for culverts on piles or rock foundations, special design will be required.

LOADING
LIVE LOAD: For legal highway loads, use HS20-44 or Alternative with 30% impact for all cover depths, no impact on invert.

COVER LESS THAN 610mm (2') - Wheel load distribution on the top slab is E=0.175S+3.2' longitudinally and concentrated along the span. Wheel load distribution on the invert slab is 2.29m (7.5')longitudinally and uniformly over the breath of the culvert.

COVER 610mm (2') OR MORE - Wheel loads distributed uniformly over a square, the sides of which are 1.75 times the depth of cover, but not less longitudinally than E on the top slab, or 2.29m (7.5') on the invert slab when such areas from several wheel concentrations overlap, the total load shall be considered as uniformly distributed over the area defined by the outside limits of the individual areas, but the overall longitudinal dimension shall not exceed the total length of the supporting slab. Neglect live load, on single spans when cover is more than 2.44m (8') and exceeds span, and on multiple spans when cover exceeds distance between exterior walls.

DEAD LOAD: Earth load of 120 pcf and an equivalent fluid pressure of 36 pcf, reduced to 84 pcf and 25 pcf respectively for clear spans of 20' or less.

UNIT STRESSES: Fs = 138Mpa (20,000 psi), N = 10
Fc = 8.27Mpa (1,200 psi)

Reinforcement embedment is 38mm (1-1/2) dia. clear, min 25.4mm (1") and in 6.35mm (1/4") increments, except as noted.

Distribution "d" bars expressed as a percent of main positive reinforcement.

Classification "A" top slab $=\frac{100}{\sqrt{SPAN}}$, max 50% (unless traffic longitudinal)
Classification "B" to "E": Top and bottom slabs #13 (#4) @ 457mm (18") max.

USE OF STANDARD DRAWING

"Strength Classification, symbolized by the letters "A", "B", "C" etc., at the top of the data table is merely a convenient designation for a particular structural section for a culvert of any given opening it is dictated by the cover or depth of fill over the the top slab.

LIVE LOAD & R.C.B. TERMINOLOGY

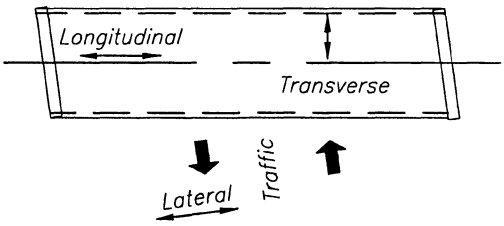

Revision	By	Approved	Date
ORIGINAL		Kercheval	12/75
Add Metric		T. Stanton	03/03

SAN DIEGO REGIONAL STANDARD DRAWING

BOX CULVERT
MISCELLANEOUS DETAILS No. 1

RECOMMENDED BY THE SAN DIEGO REGIONAL STANDARDS COMMITTEE
3/10/2003
Chairperson R.C.E. 19246 Date

DRAWING NUMBER D-81A

This drawing is NOT in conformance with latest UBC and should be used with care and judgment.

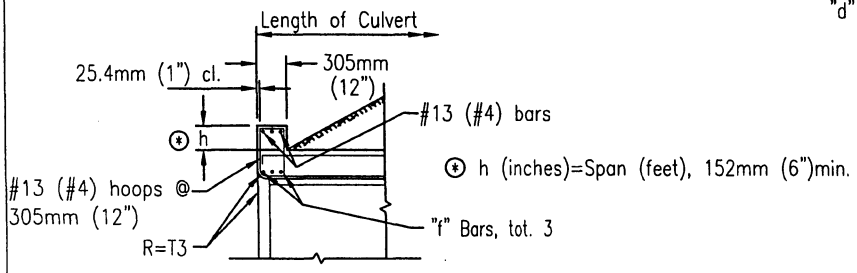

PART SECTION

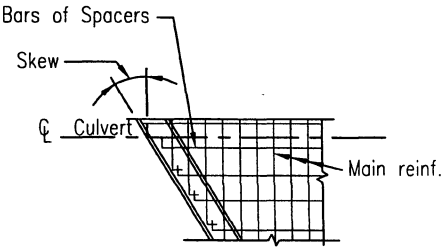

PART PLAN–SKEWED

PARAPET "f" BAR Nos.	SKEW ANGLE		
SPAN	0° TO 15°	16° TO 30°	31° TO 45°
1.22M (4')	#13 (#4)	#13 (#4)	#13 (#4)
1.83M (6')	#13 (#4)	#13 (#4)	#16 (#5)
2.44M (8')	#13 (#4)	#16 (#5)	#19 (#6)
3.05M (10')	#16 (#5)	#19 (#6)	#22 (#7)
3.66M (12')	#19 (#6)	#22 (#7)	#25 (#8)
4.27M (14')	#22 (#7)	#25 (#8)	#29 (#9)

PARAPET DETAILS FOR SINGLE SPAN CULVERTS

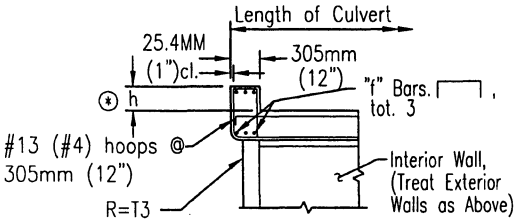

PART SECTION

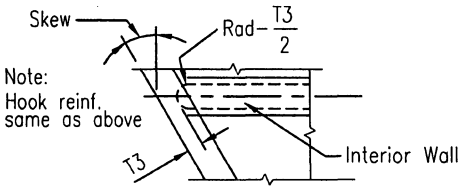

PART PLAN–SKEWED

PARAPET DETAILS FOR MULTIPLE SPAN CULVERTS

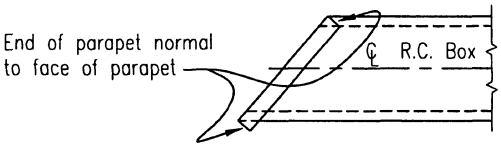

PAPAPET DETAIL FOR SKEWED CULVERTS W/O WINGWALLS

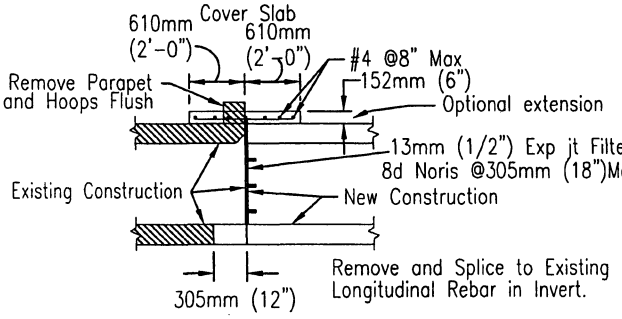

COVER: 305mm (1') AND GREATER

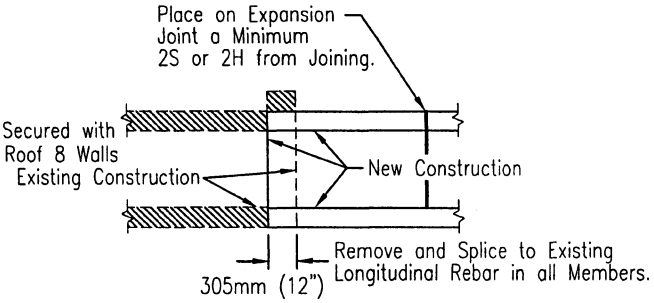

COVER: EXPOSED TOP AND GREATER

CULVERT EXTENSION
20° SKEW MAXIMUM

Revision	By	Approved	Date
ORIGINAL		Kercheval	12/75
Add Metric		T. Stanton	03/03

SAN DIEGO REGIONAL STANDARD DRAWING

BOX CULVERT
MISCELLANEOUS DETAILS NO. 2

RECOMMENDED BY THE SAN DIEGO REGIONAL STANDARDS COMMITTEE

T. Stanton 3/10/2003
Chairperson R.C.E. 19246 Date

DRAWING NUMBER D-81B

This drawing is NOT in conformance with latest UBC and should be used with care and judgment.

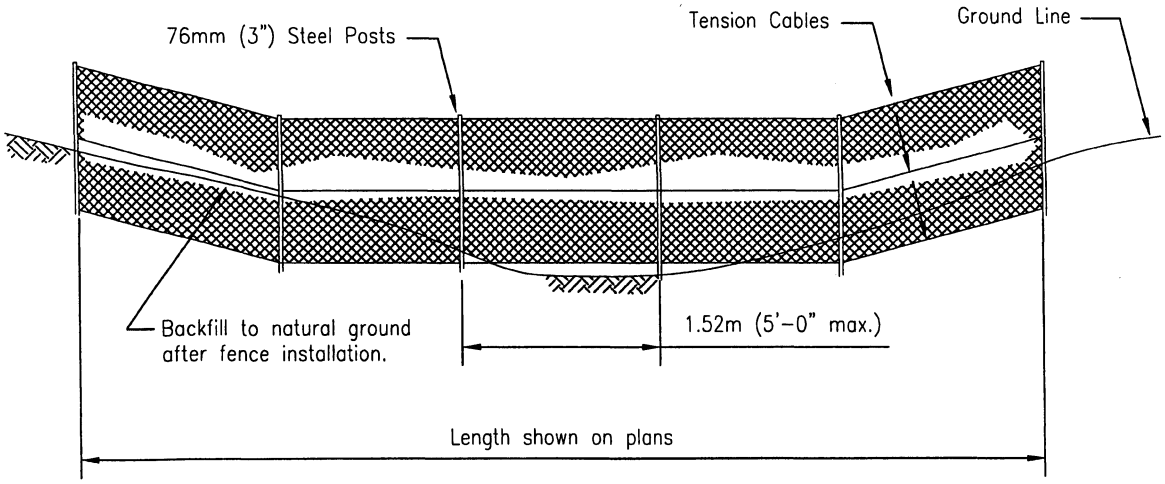

ELEVATION

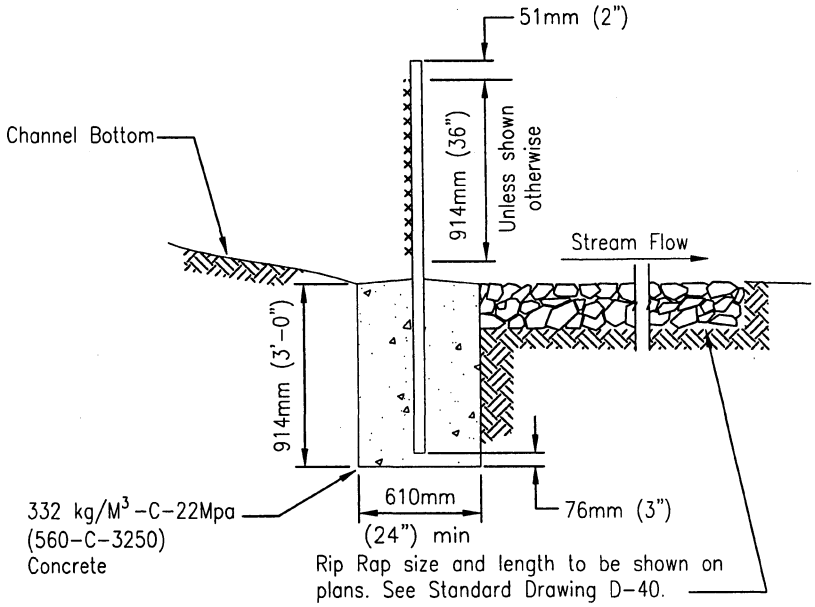

SECTION

NOTES:

1. Fence fabric shall be 51mm (2") mesh, 9 gage galvanized wire, chain link placed on the upstream side of the posts and tension cables.
2. Tension cable shall be 8mmø (5/16") steel at 457mm (18") c/c, secured at ends with cable clamps. Secure fence to cable with No. 12 galvanized steel wire looped at 152mm (6") c/c.
3. Posts shall be 76mmø (3") steel pipe, 2.63kg (5.79) lb/ft. Fill with mortar after placing.
4. Fence fabric shall be secured to posts with 9 gage wire clips at 229mm (9") c/c.

LEGEND ON PLANS

Revision	By	Approved	Date
ORIGINAL		H. Hecht	10/82
Add Metric		T. Stanton	03/03

SAN DIEGO REGIONAL STANDARD DRAWING

DEBRIS FENCE

RECOMMENDED BY THE SAN DIEGO REGIONAL STANDARDS COMMITTEE

T. Stanton 3/10/2003

Chairperson R.C.E. 19246 Date

DRAWING NUMBER D-82