APPENDIX "B"

CITY OF SAN DIEGO

FIRE AND HAZARD PREVENTION SERVICES POLICY

DESIGN STANDARDS

REVISION	BY	APPROVED	DATE	CITY OF SAN DIEGO - STANDARD DRAWINGS	DRAWING NUMBER
1	RDM	R.Medan	07/21/00	FIRE AND HAZARD PREVENTION SERVICES POLICY	FHSP

Revised 7/21/00

FIRE AND HAZARD PREVENTION SERVICES POLICY
A-00-1

FIRE ACCESS ROADWAYS
UNIFORM FIRE CODE 901.4.2

I. PURPOSE

This policy clarifies the Fire and Life Safety Services' access roadway requirements as outlined in UFC 901.4.2, and California Vehicle Code Section 22500.1.

II. SCOPE

Fire access roadways for new and existing buildings are regulated by this policy. Both public streets and private roadways fall under the scope of this policy.

III. PERMITS

No permits are required.

IV. WHERE ROADWAYS ARE REQUIRED

Buildings shall be accessible to emergency vehicle access. Access roadways shall be not less than 20 feet of unobstructed width, shall have an adequate roadway turning radius and shall have a minimum vertical clearance of 15 feet 6 inches. Access roads shall be extended to within 150 feet of all portions of the first story of the building served (as measured around the exterior of the building), and shall be installed with an all-weather driving surface. All access, including bridges, shall support the imposed load of fire apparatus to withstand a minimum 95,000 pound vehicle load.

Exceptions:

A. Proposed surfaces other than concrete or asphalt shall be designed and installed in accordance with FHPS Policy A-96-9.

B. For buildings construction prior to February 9, 1975, private roadway widths less than 20 feet may be permitted to remain. The ability to conduct fire fighting operations will be the primary consideration in grandfathering these reduced roadway widths.

REVISION	BY	APPROVED	DATE	CITY OF SAN DIEGO-STANDARD DRAWINGS	DWG. NO.
				FIRE AND HAZARD PREVENTION SERVICES POLICY	FHPS-101

C. Bridges constructed prior to April 22, 1982 shall suffice as access if such bridge was built according to the building standards in effect at that time. If the bridge will not safely support the imposed load of fire apparatus, the Chief is authorized not to operate fire apparatus over such bridge.

D. These access roadway requirements do not apply to Group U occupancies or to two or less group R-3 Occupancies located more than 150 feet from a public street or roadway.

E. These requirements may be modified when authorized by the Chief. The Chief may require installation of a fire access roadway when circumstances warrant.

V. RED CURBS/NO PARKING SIGNS

The required width of access roadways shall not be obstructed in any manner, including the parking of vehicles. Where no space is provided for parking along access roadways, they shall be kept clear by the posting of signs or the painting of curbs as follows:

A. Owners or property representatives shall post the entrance to the required roadway with an approved sign. Sign shall read "NO PARKING FIRE LANE" in letters of 1" or greater in heights. (See attached specification sheet.) Signs shall be placed every 100 feet facing traffic at a height of 7 feet. Requests for placement variations, alternative sign designs, or omission of signs shall be submitted in writing and must be approved by the Plans Review Officer.

Exception: Signs may be omitted on public streets.

B. All curbs that outline the access roadway shall be painted red. White 4 inch high letters reading "No Parking - Fire Lane" shall be stenciled every 30 feet on the red curb. If no curb is present, an 8 inch wide red stripe shall be painted on the pavement. The stripe shall be lettered the same as a curb.

Exception: Red fire lane curbs on public streets do not require the white stenciled lettering.

REVISION	BY	APPROVED	DATE	CITY OF SAN DIEGO-STANDARD DRAWINGS	DWG. NO.
				FIRE AND HAZARD PREVENTION SERVICES POLICY	**FHPS-101**

C. Signs, red curbing, and white lettering shall be maintained to ensure visibility.

NOTE: Fire and Life Safety Services recommends that signs as well as red curbs with white lettering be provided.

VI. ADDITIONAL REQUIREMENTS (FOR NEW CONSTRUCTION)

A. 26 foot access roadway

1. When adjacent to buildings that are greater than 35 feet in height above natural grade, the access roadway shall have a minimum width of 26 feet. The location shall be 15 - 25 feet from the building and shall be positioned parallel to one entire side of the building.

2. When adjacent to a fire hydrant, access roadways shall be a minimum of 26 feet in width for 20 feet in either direction from the hydrant. (See attached specification sheet).

3. Fire access roadway over 300 feet in length shall be 26 feet in width.

B. Turning radius

A minimum 50 foot turning radius is required and shall be in accordance with the semi-trailer template detailed on the attached sheet. Inside measurement shall be according to California Truck Semi-Trailer Wheel Tracks. An additional two feet of width shall be provided to allow for clearance of apparatus bumper over-hang.

C. Maximum grades shall not exceed:

1. 15% (6.75°) for concrete
2. 12% (5.4°) for asphalt

D. Large buildings

Buildings exceeding 100 feet in width and 600 feet in length shall have access roadways serving the two long sides of the building.

REVISION	BY	APPROVED	DATE	CITY OF SAN DIEGO-STANDARD DRAWINGS	DWG. NO.
				FIRE AND HAZARD PREVENTION SERVICES POLICY	FHPS-101

VII. NOTIFICATION OF PROPERTY OWNERS

A. New Construction

Fire access roadway requirements for new buildings are addressed during the plans review.

B. Existing Buildings

1. On Private Streets

The Department will notify affected property owners when it is determined that a fire access roadway is required. The notice shall advise the property owners of their right to appeal to the Board of Appeals per Uniform Fire Code, Section 103.1.4. If an appeal takes place and is decided in favor of the City, or after 30 days if no appeal is requested, a Notice to Install Fire Lane will be issued to the property owner(s). The owner is responsible for the installation of signs and/or the painting of curbs and will be given fifteen (15) days to do so. If the owner does not comply within the given time frame, the Chief may order installation to be done by the City. The administrative and direct costs incurred will then be assessed to the property owners.

2. On Public Streets

When it is determined that a public street needs to be designated as a fire access roadway, the Department will notify the affected property owners by mail. The Department's letter advises the property owners to address questions or appeals to the Fire and Hazard Prevention Services. Once questions and appeals have been addressed or after 30 days if no appeals have been filed, the Department will contact the Traffic Engineering Division of the Public Works Business Center. A site meeting will be held between the Department and Traffic Engineering to clarify exactly which curbs are to be painted and where signs, if any, are to be placed. Traffic Engineering will issue the work order for the installation of signs and/or the painting of curbs to the Streets Division of the Public Works Business Center.

C. Copies of all correspondence between the Department and property owners shall be retained in fire and Hazard Prevention Services' geographical files.

REVISION	BY	APPROVED	DATE	CITY OF SAN DIEGO-STANDARD DRAWINGS	DWG. NO.
				FIRE AND HAZARD PREVENTION SERVICES POLICY	**FHPS-101**

REQUIREMENTS FOR DEAD-END AND LOOPED ACCESSWAYS

LENGTH	WIDTH	TURNAROUND REQUIRED
0-150'	20'	NONE REQUIRED
150'-300'	20'	70' Diameter Cul-de-sac 120' Hammerhead
300'-750'	26'	100' Diameter Cul-de-sac 150' Hammerhead
OVER 750' - SPECIAL APPROVAL REQUIRED		

Curves and topographical conditions could alter the requirements for turnarounds and the width of accessways. When access road is serving more than 100 units two means of access are required.

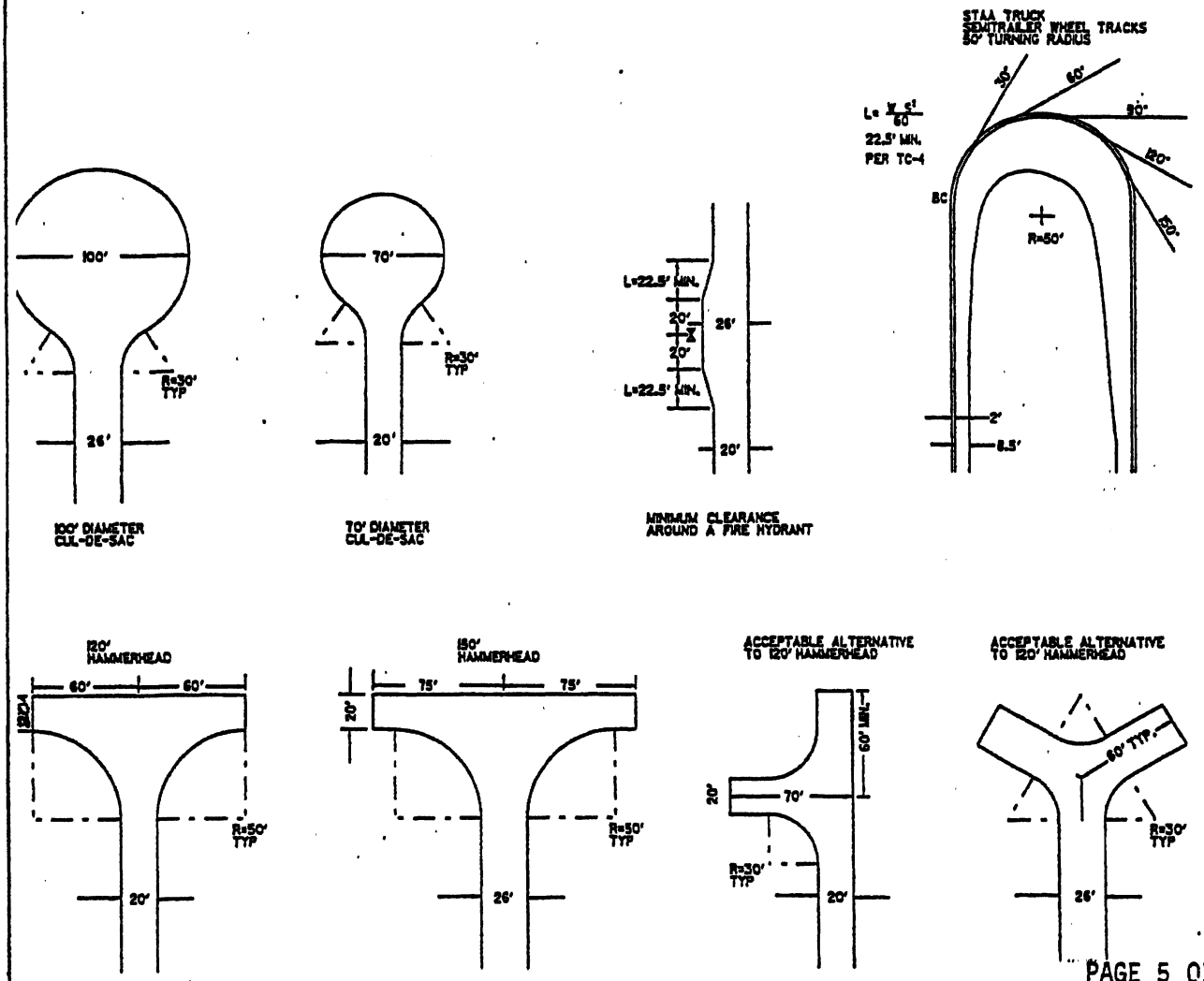

REVISION	BY	APPROVED	DATE	CITY OF SAN DIEGO - STANDARD DRAWING	DWG. NO.
				FIRE AND HAZARD PREVENTION SERVICES POLICY	FHPS-101

ALL DIMENSIONS ARE IN INCHES

R27 Suffix	SICE	BORDER WIDTH	MARGIN WIDTH	LETTER SIZE SERIES & STROKE WIDTH					CODE RA
				LINE 1	LINE 2	LINE 3	LINE 4	LINE 5	
-1.1	12 X 18	1/4	1/4	3 1/2B-.49	3B-.42	2 1/4B - .33	2 1/4 B - .33	3/8 F - .08	1

R27 SUFFIX	SIZE	DIMENSIONS											
		A	B	C	D	E	F	G	H	I	J	K	L
-1.1	12 x 18	1 1/2	15	2-3/8	7/8	1-1/8	5-1/2	9-3/4					

WHITE BACKGROUND WITH RED BORDER & SYMBOL

3/8" DIA HOLES

SIGN

Reflectorized Material
Aluminum Sign

REVISION	BY	APPROVED	DATE	CITY OF SAN DIEGO - STANDARD DRAWINGS	DWG. NO.
				FIRE AND HAZARD PREVENTION SERVICES POLICY	PAGE 6 OF 6 FHPS-101