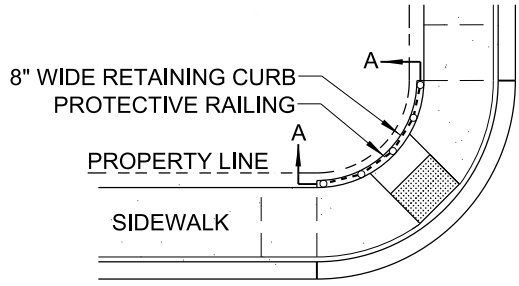

PLAN

NOTE:
PROVIDE PROTECTIVE RAILING TYPE A TO PREVENT PEDESTRIAN ACCESS AT THE BACK OF CURB RAMP.

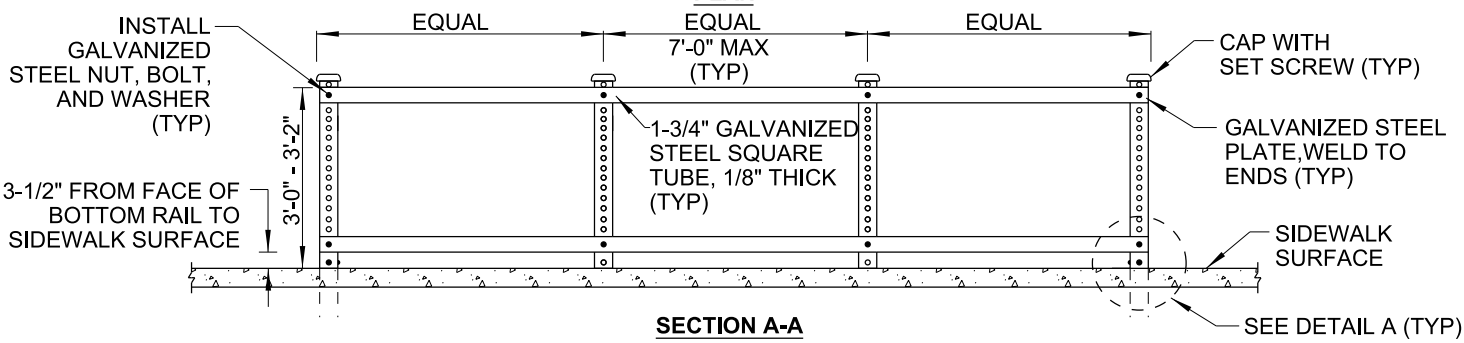

SECTION A-A

PROTECTIVE RAILING - TYPE A

NOTE:
PROVIDE PROTECTIVE RAILING TYPE B TO PREVENT PEDESTRIAN ACCESS AT SIDE OF CURB RAMP.

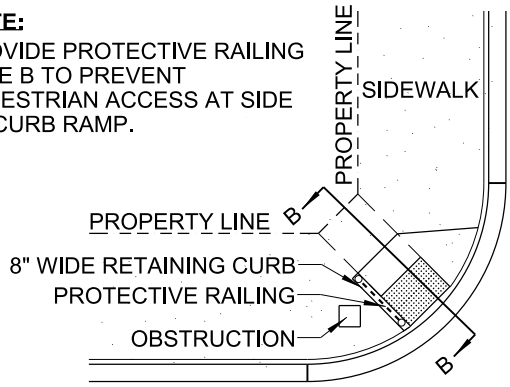

PLAN

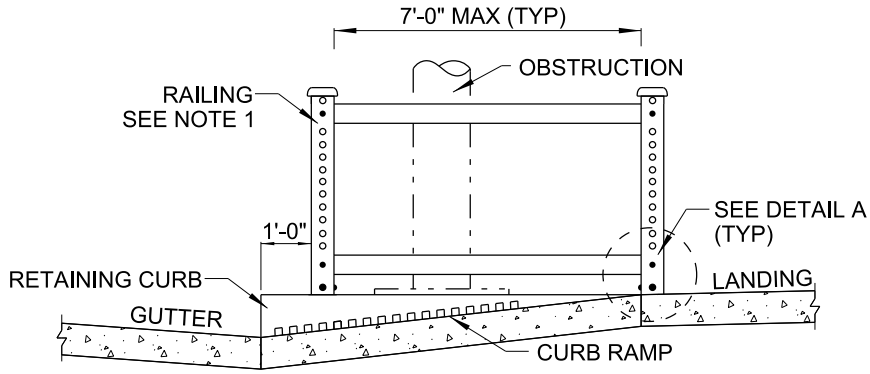

SECTION B-B

PROTECTIVE RAILING - TYPE B

NOTES:

1. POSTS TO BE SET 1'-0" BEHIND THE FACE OF CURB.
2. IN EXISTING SIDEWALK AREA SET POSTS INTO 4" CORE BORING.
3. POSTS SHALL BE WRAPPED IN 6 MIL VISQUEEN PLASTIC PRIOR TO POURING CONCRETE OR GROUTING.
4. HORIZONTAL 1-3/4" GALVANIZED STEEL SQUARE TUBE TO BE MOUNTED ON THE SIDE OF THE BREAK-AWAY POSTS, OPPOSITE TO THE RAMP.
5. THE INSTALLATION OF PROTECTIVE RAILING WILL BE APPROVED ONLY IF THE OBSTRUCTION CANNOT BE INCORPORATED INTO THE FLARES.

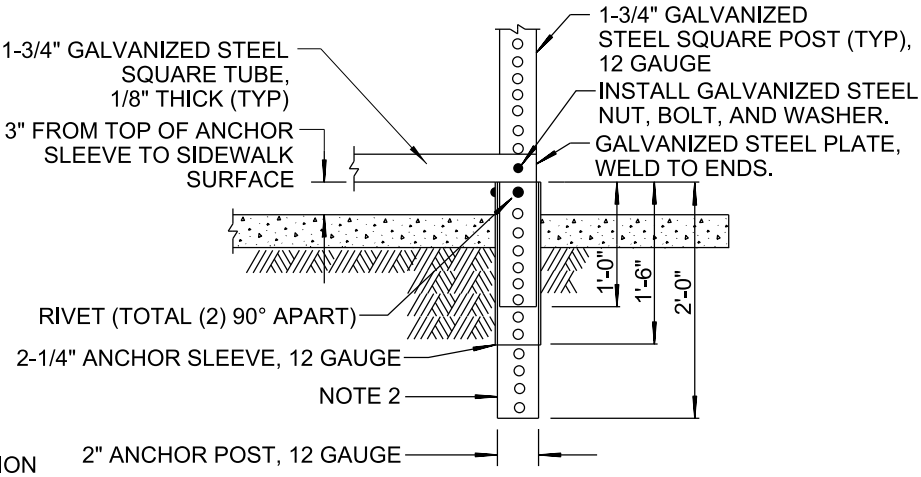

DETAIL A

LEGEND ON PLANS

REVISION	BY	APPROVED	DATE
ORIGINAL	FC	J. NAGELVOORT	02/16
REDRAFTED	CD	J. NAGELVOORT	09/18
UPDATED	HN	J. NAGELVOORT	04/19

CITY OF SAN DIEGO – STANDARD DRAWING

PROTECTIVE RAILING AT CURB RAMPS

RECOMMENDED BY THE CITY OF SAN DIEGO STANDARDS COMMITTEE

COORDINATOR R.C.E. 56523 DATE 4/10/19

DRAWING NUMBER **SDG-140**